Intuity™

Call Accounting System User Guide

585-310-728
Issue 1
Comcode 107380610
November 1994

Disclaimer

Intellectual property related to this product (including trademarks) and registered to Lucent Technologies Inc. has been transferred or licensed to Avaya Inc.

Any reference within the text to Lucent Technologies Inc. or Lucent should be interpreted as references to Avaya Inc. The exception is cross references to books published prior to April 1, 2001, which may retain their original Lucent titles.

Avaya Inc. formed as a result of Lucent's planned restructuring, designs builds and delivers voice, converged voice and data, customer relationship management, messaging, multi-service networking and structured cabling products and services. Avaya Labs is the research and development arm for the company.

Contents

About This Document ix
- Purpose ix
- Intended Audiences ix
- How to Use This Document ix
- Conventions Used x
- Trademarks xi
- SecurityMechanisms xi
- Related Resources xii

1 Introducing Your CAS System 1-1
- System Operation 1-2
- Intuity System Interface 1-3
  - Intuity Screens 1-3
  - Screen Layout 1-3
  - Standard Function Keys 1-4
  - Frame Management Menu 1-5
    - List 1-5
    - Move 1-5
    - Reshape 1-6
    - Refresh 1-6
    - Color Attributes 1-6
  - Selecting a Menu Option 1-7
  - Filling in Fields 1-7
  - Moving Through Fields 1-8
    - Choices Menu 1-8
- CAS User Interface 1-8
  - Using Menus 1-8
  - Using Data Entry Screens 1-10
  - Summary of Commands 1-11
- Logging Into CAS 1-12
- Logging Out of CAS 1-12
- Getting Started 1-13
- Scheduling CAS Maintenance 1-14

2	**Planning for CAS Integration and Setup**	2-1
	CAS Capacities and Features Table	2-2
	CAS Hardware Table	2-2
	Using the Switch Information Worksheet	2-3
	Using the Site Information Worksheet	2-4
	Using the Telephone System Configuration Worksheet	2-5
	Using the Dialed Digit Processing Worksheet	2-8
	Using the Call Record Collection Configuration Worksheet	2-14
	Using the Organization Configuration Worksheet	2-16
	Using the Report Schedules Worksheet	2-18
	Using the Cost Adjustments Worksheet	2-21
	Using the Account Code Table Worksheet	2-23
	Worksheets	2-24
3	**Generating and Scheduling Reports**	3-1
	Generating ANI/Demographics Reports	3-2
	Generating Selection Reports	3-4
	Generating Organization Reports	3-8
	Generating Account Code Reports	3-11
	Generating CDR Analysis Reports	3-12
	Scheduling Reports	3-14
	Application Tips	3-17
	Spotting Telephone Abuse	3-17
	Alllocating Costs	3-17
	Generating Revenue	3-18
	Billing Back Clients	3-18
	Measuring Productivity	3-19
	Stopping Facilities Misuse	3-19
	Optimizing Networks	3-19
4	**Configuring the Site**	4-1
	Editing the Site Information	4-2
	Procedure	4-2

Contents

Field Description 4-2
Editing the Telephone System Configuration 4-3
Procedure 4-4
Field Description 4-6
Editing the Account Code Table 4-7
Procedure 4-7
Field Description 4-8
Changing Account Codes in Call Records 4-8
Installing a Site 4-10
Listing Site Tables 4-11

5 Configuring the Organizatrion 5-1
Editing Company Information 5-2
Procedure 5-2
Field Information 5-2
Editing the Organization Table 5-2
Procedure 5-3
Field Information 5-6
Loading the Organization Table 5-7
Data File Format 5-7
Loading the Data File 5-8
Verifying the Operation 5-9
Moving Entries in the Organization Table 5-10
Procedure 5-10
Listing the Directory and Organization Tables 5-12

6 Managing the CDR Collection Configuration 6-1
Editing CDR Collection Information 6-2
Procedure 6-2
Field Information 6-3
Editing CDR Port Information 6-4
Procedure 6-4
Field Information 6-4
Listing the CDR Configuration Tables 6-5

7	**Managing the Costing Configuration**	7-1
	Editing the Carrier Information	7-4
	Procedure	7-4
	Field Information	7-4
	Editing Cost Adjustments	7-5
	Procedure	7-5
	Field Information	7-6
	Editing the Holiday Table	7-7
	Procedure	7-7
	Field Information	7-8
	Editing the Dialed Digit Processing Table	7-8
	Procedure	7-10
	Field Information	7-11
	Editing Rate Tables	7-12
	Procedure	7-12
	Field Information	7-13
	Listing Costing Tables	7-15
8	**Using Standard Operating Processes**	8-1
	Deleting Call Records from Storage	8-2
	Procedure	8-2
	Field Description	8-2
	Configuring Call Reporting	8-3
	Procedure	8-3
	Field Description	8-3
	Viewing Reports	8-4
	Viewing CAS Logs	8-5
	Administering CAS Password (sa)	8-7
	Backing Up and Restoring CAS Data	8-7
	Using CAS to Perform a Backup to Disk	8-8
	Using CAS to Perform a Restore from Disk	8-9
	Using Intuity to Perform an Attended Backup	8-9
	Using Intuity to Restore a Backup	8-11
	Updating CAS Software	8-13
	Checking System Storage	8-13
	Listing System Tables	8-14
	Verifying System Status	8-16

Contents

Viewing Installed Software 8-17

9 Configuring and Using Alarms, Logs, and Diagnostics 9-1
Stopping and Starting Call Costing 9-2
Monitoring CDR Collection 9-3
Rebuilding the CAS Call Record Database 9-4
Using the Hacker Tracker Option 9-5
How Can HackerTracker Help? 9-5
What Criteria Should You Set For Alarms? 9-6
Editing HackerTracker Setup 9-6
HackerTracker Reports 9-8
Accessing Alarm Messages 9-9
Printing HackerTracker Tables 9-10
Using CAS Alarms 9-11
CAS Messages That Appear in Intuity Logs 9-12
Editing Voice Alarm Parameters 9-12
Testing Alarm Setup 9-13
Viewing the Intuity Alarm Log 9-14
Using the Intuity SMDR Port Diagnostic 9-16

A CAS Menu System A-1

B Installing CAS B-1
Verifying Installed CAS Software B-2
Connecting the MAP Processor to Your Switch B-2
Connecting the MAP Processor to A MERLIN LEGEND Switch B-2
Connecting An Intuity MAP Processor and a MERLIN LEGEND Switch Less Than 50 Feet Apart B-2
Connecting An Intuity MAP Processor and a MERLIN LEGEND Switch Over 50 Feet Apart B-4

Connecting the MAP Processor to a Definity G1 or G3, or a System 75 Switch B-6
Using the Switch's DCE Port to Connect to an Intuity MAP Processor within 1000 Feet B-6
Using the Switch's DCE Port to Connect to an Intuity MAP Processor Within 7000 Feet B-7
Using a TN-726 Circuit Pack to Connect an Intuity MAP Processor and a Switch Within 7000 Feet B-9
Using a TN-754 Circuit Pack to Connect an Intuity MAP Processor and a Switch Within 5000 Feet B-10
Required Software Installation Materials B-11
Loading Basic CAS Software and Executing the Startup Process B-12
Verifying Your Switch's Call Record Format B-14
Verifying MERLIN LEGEND Call Record Formats B-14
Verifying System 75 and Definity G1 and G3 Call Record Formats B-16
Verify SMDR Is Turned On for Trunk Group(s) (System 75 and DEFINITY Switches Only) B-18
Installing Rating Tables and Setting Up a Site B-18
Loading the Rate Tables B-19
Entering Site Information B-20
Entering the Telephone System Configuration B-21
Entering the Dialed Digit Processing Table B-22
Entering CDR Collection Information B-23
Creating the Organization Table B-24
Entering the Organization Table B-24
Displaying/Printing the Organization Table B-26
Installing and Setting Up the HackerTracker Option B-27
Installing and Setting CAS Alarm Notification B-29
Customizing Your System B-32
Testing Your Installation B-32
Verifying the SMDR Port Status and Displaying Incoming SMDR B-33
Testing Your PBX/KTS Interface Selection B-33
Backing Up CAS Databases B-35

Contents

C	**Sample Reports**	C-1
	Account Code Reports	C-2
	Abandoned Call Selection Detail Reports	C-3
	Area Code Summary Report for Incoming Calls	C-4
	Area Code Summary Report for Outgoing Calls	C-4
	City/State Report for Incoming Calls	C-5
	City/State Report for Outgoing Calls	C-5
	Call Type Report	C-6
	Duration Report	C-7
	Time of Day Report	C-8
	Trunk Group Report	C-9
	Site Report	C-10
	Date Report	C-10
	Trunk Group Busy Hour Report	C-10
	Busy Day Trunk Utilization Report	C-11
	Organization Detail by Site Report	C-12
	Department Summary by Site Report	C-13
	Cost Center Summary by Site Report	C-14
	Extension Summary by Site Report	C-15
	Selection Report	C-16
	Glossary	GL-1
	Index	IN-1

About This Document

Purpose

This manual is intended to guide those who want to understand the AT&T Intuity™ Call Accounting System (CAS), how it operates, how it fits into the Intuity platform, and how it is used for call accounting operations. It provides detailed instructions for generating reports and managing the system.

Intended Audiences

This document is written for the following audiences:

- Telecommunications managers that wish to use the information in CAS reports
- System managers responsible for maintaining CAS

NOTE:
Some knowledge of call accounting and the telephone switch at your business, is required to use CAS.

How to Use This Document

This document describes every CAS function, following the order of CAS menu system. An introductory chapter precedes the body of CAS function descriptions; appendixes provide additional reference material. A list of acronyms and abbreviations, a glossary, and an index appear at the back.

First time users should read chapter 1, *Introducing Your Call Accounting System*, for descriptions of the design and flow of a working system, the Intuity and CAS user interfaces, and how to log in and out of the system. This chapter also includes a checklist to help you get CAS operations started and customized and a maintenance schedule.

Persons installing CAS software should refer to:

- Chapter 2, *Planning for CAS Integration and Setup*, for setup information and worksheets.
- Appendix B, *Installing CAS*, for the complete installation process.

Telecommunication managers that wish to obtain reports should read the following report-related material:

- Chapter 3, *Generating and Scheduling Reports*, describes all call accounting reports and how to generate them.
- Report samples located in an appendix.
- Appendix C, *Sample Report*.

System managers should read the following material to maintain the CAS application and databases:

- Chapter 4, *Configuring the Site*, describing how to keep the site, account code, and telephone system databases up-to-date.
- Chapter 5, *Configuring the Organization*, detailing the functions used to create and maintain a table of telephone extensions structured after a company's own corporate organization.
- Chapter 6, *Managing the CDR Collection Configuration*, documenting call collection functions.
- Chapter 7, *Managing the Costing Configuration*, documenting call costing functions.
- Chapter 8, *Using Standard Operating Processes*, describing functions used during normal operation to manage system resources.

To understand and diagnose troubles when they occur, system managers should read chapter 9, *Configuring and Using Alarms, Logs, and Diagnostics* describing CAS mechanisms to detect problems.

Conventions Used

The following typographic conventions are used in this document:

- Rounded boxes represent keyboard keys that you press to execute commands and cursor movements.

- The word "enter" in a procedure means to type a value and press **ENTER**. For example, an instruction to type the letter "y" and press **ENTER** is shown as:

  Enter y to continue.

- Information displayed on your terminal screen is shown in constant-width type. Information that you enter from your keyboard is shown in bold type — for example:

  When the screen displays the `login`: prompt, enter **sa**

- Variables that the system or you supply are shown in italic type — for example:

  On your screen, find the file listed `loadorg`*mmddyy* — where *mmddyy* is today's date.

Trademarks

DEFINITY, Intuity™, MERLIN LEGEND®, and UNIX Laboratories® are trademarks of AT&T.

MCI is a registered trademark of MCI Communications Corporation.

Security Mechanisms

CAS provides the security measures listed below:

- the ability to change login passwords required for access to the application (see *Administering CAS Passwords* in chapter 8)
- the Hacker Tracker option to help stop fraudulent use of your telephone switch (see *Setting Up Hacker Tracker* in chapter 9)

Related Resources

The following documents may provide you with additional information:

Books	Book #
Intuity System Description	585-310-211
Intuity AUDIX R3.2 Administration and Feature Operations	585-310-552
Intuity Documentation Guide	585-310-540
Intuity R2.0 Planning for Migrations and Upgrades	585-310-650
Intuity New System Planning for Release 2.0	585-310-604
Intuity MAP/5 Hardware Installation	585-310-146
Intuity MAP/5 Installation Checklist	585-310-155
Intuity MAP/40 Hardware Installation	585-310-138
Intuity MAP/40 Installation Checklist	585-310-141
Intuity MAP/100 Hardware Installation	585-310-139
Intuity MAP/100 Installation Checklist	585-310-156
Intuity Software Installation for Release 2.0	585-310-157
Intuity Integration with System 75 and DEFINITY Communications System G1 and G3	585-310-214
Intuity Integration with System 85 and DEFINITY Communication System G2	585-310-215
Intuity Integration with 5ESS	585-310-219
Intuity Integration with DMS-100	585-310-223
Intuity Integration with Northern Telecom SL-1, Meridian, and Meridian SL-1	585-310-221
Intuity Integration with Mitel	585-310-222
Intuity Integration with NEAX	585-310-216
Intuity Integration with ROLM 8000,9000,9571	585-310-220
Intuity Integration with Merlin Legend	585-310-231
Intuity AUDIX Digital Networking Administration	585-310-533
Intuity Call Accounting System User Guide	585-310-728
Intuity Call Accounting System Quick Reference	585-310-729
AMIS Analog Networking	585-300-512
Intuity Intro Voice Response	595-310-718
Intuity Platform Administration and Maintenance for Release 2.0	585-310-554
Intuity Message Manager User's Guide	585-310-725
AUDIX Administration and Data Acquisition Package	585-302-502
A Portable Guide to Voice Messaging	585-300-701
Voice Messaging Quick Reference	585-300-702
Multiple Personal Greetings Quick Reference	585-300-3705
Voice Message Wallet Card	585-304-704
Voice Message Outcalling Quick Reference	585-300-706
Voice Messaging Business Card Stickers	585-300-705
Intuity AUDIX R3.2 Voice Messaging Subscriber Artwork Package	585-310-730
Intuity Message Manager Administration and Diagnostics	585-310-553
Intuity Upgrade and Migration Procedures for Release 2.0	585-310-158

Introducing Your CAS System

1

The AT&T Intuity™ Call Accounting System (CAS) is a comprehensive software package designed to administer telephone expenses and track facility usage in a business, university, or government installation using an AT&T MERLIN LEGEND, System 75, or DEFINITY G1 or G3 system.

CAS runs on a MAP/5, MAP/40, or MAP 100 processor connected to your switch. Once you log into the Intuity system, its main menu appears on display, listing the applications available to you.

A sample of the Intuity main menu appears below.

```
 INTUITY (TM) Administration
 AUDIX Administration
>Call Accounting System
 Customer/Services Administration
 Networking Administration
 Switch Administration
 Switch Interface Administration
 Voice System Administration
```

Figure 1-1. Intuity™ Administration (Main) Menu

System Operation

Figure 1-2 illustrates the flow of a working system.

1. A phone call placed on site routes through the switch to its final destination. Incoming calls are routed to an extension.
2. The switch prepares an electronic record of the "transaction".
3. The CAS background task receives the switch output and stores it in the call input buffer. When the buffer reaches its programmed occupancy thresholds, all call records in the buffer are processed, costed, and stored.
4. Stored call record information is accessible for reports.

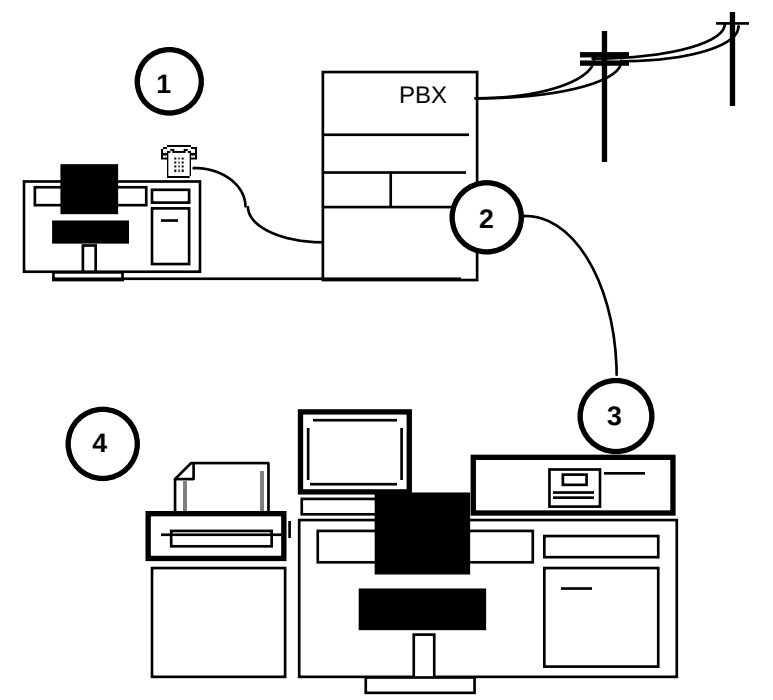

Figure 1-2. Operational Flowchart

Intuity User Interface

Some CAS operations are executed from the Intuity screens. The sections that follow describe how to use the Intuity screens to perform these tasks.

Intuity Screens

You perform many Intuity system tasks using Intuity screens. Intuity screens allow you to view information, enter information, or select an option. These screens are menu-driven; you select a menu option to display another menu or screen. You can display more than one screen or menu concurrently, but only the last one displayed is active. To return to the previous screen, you can cancel the active screen. You perform commands on a screen by using function keys.

Screen Layout

A sample screen is show below:

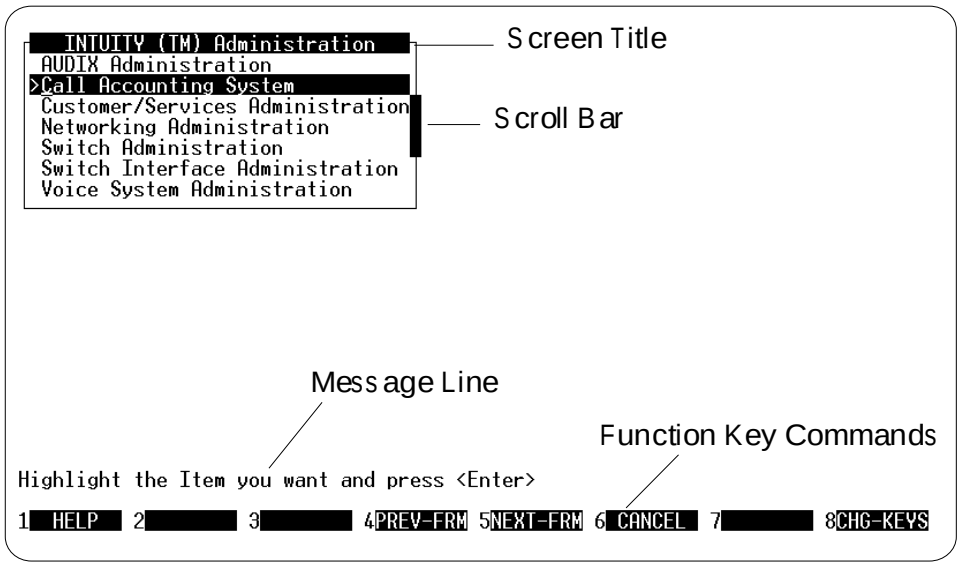

Figure 1-3. Sample Screen Layout

The table that follows describes each component of the screen.

Screen Component	Description
Screen Title	A name describing the screen or menu.
Scroll Bar	Indicates when a screen contains more than one page of information. If the scroll bar contains a downward arrow, you can press **V**, **PgDn**, or **NEXTPAGE** (F3) to scroll to the additional information. The scroll bar then contains an upward arrow, and you can press Δ, **PgUp**, or **PREVPAGE** (F2) to scroll back.
Message Line	Contains a brief instruction or message about how to use the screen.
Function Keys	Boxed labels that correspond to the first eight function keys (F1 through F8) on your keyboard. Each label represents a command that is performed when you press the corresponding function key. If more than one screen is open, the commands displayed apply only to the active screen. If no command label appears for a given function key, that key is not available for the active screen. You can display an additional set of function keys by pressing **CHG-KEYS** (F8).

Standard Function Keys

Several function key commands perform standard actions regardless of the screen you are viewing. Other commands are unique to a particular screen. The standard function key commands are described below:

Command	Description
HELP	Displays information about the active screen, including available function key commands. To close the help screen, press **CANCEL**.
CHOICES	From a field where you can type information, displays a menu of possible options, if available. For more information, see the section "Filling In Fields."
SAVE	Saves any changes you made in a screen.
PREV-FRM	When a screen contains more than one page of information, scrolls to the previous page.
NEXT-FRM	When a screen contains more than one page, scrolls to the next page.
PREVPAGE	If more that one screen is open, makes the previous screen active while still displaying the current screen. Continue pressing the key to scroll in a loop through all open screens.
NEXTPAGE	If more than one screen is open, makes the next screen active while still displaying the current screen. Continue pressing the key to scroll in a loop through all open screens.
CANCEL	Closes the active screen and returns to the previous screen. Any unsaved changes are lost.
CHG-KEYS	Toggles between two available sets of function key commands.

Command	Description
PRINT	If you have a printer connected to your Intuity system, prints each page of the screen that can be displayed.
FRM-MGMT	Displays a menu that allows you to change several physical characteristics of the screen. For more information, see the following section, *Frame Management Menu*.

Frame Management Menu

The Frame Management menu lists several options that affect a screen's appearance. All options may not appear for every screen. A sample Frame Management menu is shown below:

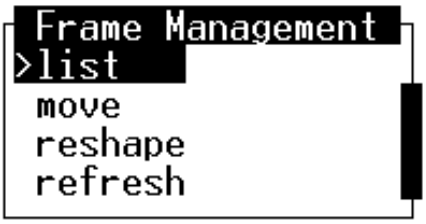

The following sections describe how to use each of the options on this menu.

List

The List option displays a list of all open screens. Use the following procedure:

1. From any screen, press **CHG-KEYS** (F8), if needed, and then press **FRM-MGMT** (F7).
2. The `Frame Management` menu displays.
3. Select `list`, and press **ENTER**.
4. The `Open Frames` menu displays, listing the screen titles for all open screens.
5. To activate one of the listed screens, select the screen you want, and press **ENTER**.
6. The `Open Frames` menu closes, leaving the selected screen active.

Move

The Move option allows you to move the current screen to another location on the display. Use the following procedure:

1. Make sure that the screen you want to move is the active screen.
2. Press **CHG-KEYS** (F8), if needed, and then press **FRM-MGMT** (F7).
3. The `Frame Management` menu displays.
4. Select move, and press **ENTER**.

The Frame Management menu closes, and the selected screen displays as four corners.

5. Use the arrow keys to reposition the four corners, and press **ENTER**.
6. The screen redisplays in the new location. Once you close the screen, it returns to its original location.

Reshape

The Reshape option allows you to move and resize the current screen.

NOTE:
You cannot resize a screen that allows you to fill in fields.

Use the following procedure:

1. Make sure that the screen you want to resize is the active screen.
2. Press **CHG-KEYS** (F8), if needed, and then press **FRM-MGMT** (F7).
3. The Frame Management menu displays.
4. Select Reshape, and press **ENTER**.
5. The Frame Management menu closes, and the upper left corner of the selected screen displays as a blinking cursor.
6. Use the arrow keys to reposition the upper left corner of the screen to its new location, and press **ENTER**.
7. The lower right corner of the screen displays as a blinking cursor.
8. Use the arrow keys to reposition the lower right corner of the screen to its new location, and press **ENTER**.
9. The screen resizes as specified and displays in the new location. Once you close the screen, it returns to its original size and location.

Refresh

The Refresh option redraws the screen and eliminates any extraneous words or lines that may appear. Use the following procedure:

1. From any screen, press **CHG-KEYS** (F8), if needed, and then press **FRM-MGMT** (F7).

   The Frame Management menu displays.
2. Select refresh, and press **ENTER**.

   The screen redraws, eliminating any extraneous information.

Color Attributes

If you are using a color terminal, the Color Attributes option allows you to change the colors that appear on your screens. Use the following procedure:

1. From any screen, press **CHG-KEYS** (F8), if needed, and then press **FRM-MGMT** (F7). The `Frame Management` menu displays.
2. Select `Color Attributes`, and press **ENTER**. The screen displays, as shown below:
3. Type the colors you want over the default settings, or press **CHOICES** (F2) to select from a menu of possible color choices. (For information about how to use this menu, see the section *Choices Menu*.)
4. When you finish changing the settings, press **SAVE** (F3).
5. The screens display with the colors you specified until you log off the system. The next time you log on, the colors return to the default settings.

Selecting a Menu Option

A menu contains a list of options that you can select. To select a menu option, you highlight the option, and press **ENTER**.

To highlight a menu option, use any of the following methods:

- Press Δ and ∇ to move the cursor to the menu option you want to highlight. You can scroll in a loop through the top or bottom of the menu.
- Press **HOME** to highlight the first menu option. Press **END** to highlight the last menu option.
- Type the first character of the menu option you want. The first option beginning with that letter is highlighted. When you use this method, the following rules apply:
  - If more than one option begins with the same letter, type enough letters to identify the option you want. If the cursor is already on the first letter of an option beginning with the same letter, type the second letter in the option you want.
  - To move the cursor back to the beginning of a menu option's name, press **BACKSPACE**.
  - This feature is not case-sensitive; you can type "a" or "A."

Filling in Fields

Some screens contain fields where you can type information. When you fill in a field, you type in the lines displayed on the screen.

When you enter information in a screen field, the following guidelines apply:

- In most cases, the length of the line represents the maximum number of characters allowed for that field.
- The type of characters you can enter may vary depending on the screen you are viewing. Information about what you can type may appear in the message line at the bottom of the display.

- Once you type information in a field, you need to save the changes made to the screen. You also have the option to cancel your changes without saving them.

Moving Through Fields

You can use the following keys to move through fields on a screen:

Key(s)	Description
ENTER, TAB	Moves the cursor to the next field, moving left to right through each field. From the last field on the screen, wraps to the first field.
SHIFT + TAB	Moves the cursor to the previous field, moving right to left through each field. From the first field on the screen, wraps to the last field.
∇	Moves the cursor down one field. From the bottom field, wraps to the top field.
∆	Moves the cursor up one field. From the top field, wraps to the bottom field.
>	Moves the cursor right one character within a field.
<	Moves the cursor left one character within a field.
HOME	Moves the cursor to the beginning of the current field.
END	Moves the cursor to the end of the current field.
DELETE , DEL	Deletes the character on which the cursor is located.
BACKSPACE	Deletes the character to the left of the cursor.

Choices Menu

When a screen contains fields, you may be able to display a menu listing possible field settings and select one directly from that list. Use the following procedure:

1. From a screen containing fields, move the cursor to the field for which you want to display a list of choices, and press **CHOICES** (F2).

   A menu displays listing possible field settings. Depending on the field, the menu may contain all possible settings or just common settings for that field. If no menu is available, a beep is sounded.

2. Select the menu option you want, and press **ENTER**.

   The choices menu is closed, and the field setting you selected is displayed in the current field.

CAS User Interface

This section describes how to use the CAS application's menu system and screen displays.

Using Menus

The figure below shows the CAS main menu. You access any CAS function from this menu — sometimes via another menu. A diagram of the CAS menu system appears in appendix A.

You access a CAS menu item the same way you access Intuity menus: by highlighting it with the reverse video bar using the ∆ (up) or ∇ (down) arrow keys, or by typing its first few unique letters, then pressing **ENTER**.

```
1       Call Accounting System
→Reports Menu
 Site Configuration Menu
 Organization Configuration Menu
 CDR Collection Configuration Menu
 Costing Configuration Menu
 System Configuration Menu
 HackerTracker Configuration Menu
 Exit
```

Figure 1-3. CAS Main Menu

The bottom of a menu screen displays boxed labels that correspond to the function keys **F1** through **F8**, in that order. If the box is empty, that key has no current functionality.

Most CAS menu displays have the **HELP** (F1) and the **CANCEL** (F6) keys enabled, as shown in the figure below (this particular display appears after having selected Reports from the CAS main menu):

- **F1** displays a "window" containing a brief explanation of all items in the current menu (framed in red, if you have a color monitor).
- **F6** cancels the current menu or "help window" frame and returns to the prior menu.

```
                                Call Accounting System
1       Call Accounting System          2            REPORTS
→Reports Menu                           →ANI/Demographics Reports Menu
 Site Configuration Menu                 Generate Selection Report
 Organization Configuration Menu         Organization Reports Menu
 CDR Collection Configuration Menu       Account Code Reports Menu
 Costing Configuration Menu              CDR Analysis Reports Menu
 System Configuration Menu               Schedule Reports
 Exit

3               ANI/DEMOGRAPHICS REPORTS
→Generate Area Code Summary Report for Incoming Calls
 Generate Area Code Summary Report for Outgoing Calls
 Generate City/State Summary Report for Incoming Calls
 Generate City/State Summary Report for Outgoing Calls
 Generate Abandoned Call Selection Report

1 HELP  2        3        4        5        6 CANCEL  7        8
```

Figure 1-4. Sample CAS Menu Display

Using Data Entry Screens

Menu selections ultimately lead into a data entry screen — similar to the sample below — used to complete the function by a query or an update of information, or by starting a process such as generating a report.

```
COMMANDS: Next Previous Update Generate Exit
Update - <ESC> to save, ^C to cancel, <RETURN> for next field
--------------------------------------------------------------------------------
                          ORGANIZATION DETAIL REPORT
--------------------------------------------------------------------------------

        Report Number:              50
     Department Name: ACCOUNTING
    Cost Center Name:
          Start Time: 00:00
            End Time: 23:59                 Inclusion/Exclusion Options
          Page Break? N                   -------------------------------------
           Call Type:                     1. Include Call Type
  Inclusion/Exclusion: 1                  2. Exclude Call Type

            Subtitle:

    Minimum Duration:  0:00:00                Maximum Duration: 23:59:59

              And/Or: A

        Minimum Cost:      $0.00                  Maximum Cost:  $1000.00
Enter a cost center name. (you may use wildcards)
```

Figure 1-5. Sample Data Entry Screen

When a screen is accessed by a menu selection, CAS retrieves all records in the file associated with that selection and displays the first record on the screen.

Some files have a single record (for example, the company information file displayed by the Organization Detail Report screen shown in figure 1-5). Other files have many records (for example, the rate tables containing the tariffs for all carriers built-in for CAS, or the organization table containing a user-defined directory of all departments, cost centers, extensions, and personnel records).

Most data entry screens have these elements in common:

- Commands. The top of the screen displays the list of available commands, along with a brief description of the selected (highlighted) command. A summary of database commands appears in the following section.

  To change the highlighted selection, press the arrow keys; to execute the current selection press **ENTER**, or type the first letter in the command name.

- Fields. These are highlighted areas where the information you exchange with the system appears. Fields show "parts" of records — such as `Last Name` or `Extension` — that are stored or retrieved by the system.

When a command that involves a query, an addition, or update is initiated, the cursor moves to the first information field. At this point, use the terminal keyboard as a regular typewriter for data entry.

- Comments. The notes, prompts, command instructions, and messages at the bottom of the screen guide you through a data entry session. Some notes give instructions, listing the keyboard commands you can use in a particular operation. Helpful information, system messages, error messages, and warnings also display here.

Summary of Commands

The following table describes the commands available in CAS data entry screens. You execute a command by pressing the bracketed letter.

Command	Description
Q (query)	Query searches for records that match a given field value. Not all functions allow queries. Where enabled, press **Q** (query) and enter a value in a key field for your search. Press **ESC** to complete the query. CAS generates a list of matching records and displays the first record from the list.
N (next) or **P** (previous)	Press **N** (next) and **P** (previous) to display the next or the previous sequential record in a file.
D (detail) or **M** (master)	In a hierarchical file, Detail and Master move from the higher (master) record displayed, to its lower (detail) record, or vice versa. The CAS company organization file, for example, is structured as a hierarchy with site (top), department (2nd), cost center (3rd), and extension (bottom) levels.
U (update)	Update changes the database record displayed in a screen.
Ctrl + W	This command displays a window that lists acceptable input values for the current data entry field. Not all fields have “help" windows. Where enabled, press **Ctrl + W** and choose a value with the highlighted bar (use ∇ and ∆ to move the bar up and down). Press **ENTER** to place the value in the field; **Ctrl + C** exits the window without entering a value.
R (remove)	Remove deletes the record currently displayed. Not all functions allow removals. Where enabled, press **R** (remove), then **ESC** to complete the command; **Ctrl + C** to abort it.
G (generate)	Generate outputs a report or table listing specified on the screen. After pressing **G** (generate), a report compiles. Depending on the output method and device specified, the report is sent to the screen, piped to a UNIX program, redirected to an I/O device, or appended to a text file. To stop a report while compiling, press **Ctrl + BREAK**.
C (choose) and **T** (transfer)	Choose and Transfer perform an "ownership” change of key fields, whereby you choose and then transfer the selected data field from a "source" to a “destination" record.
S (start) or **F** (finish)	Use Start and Finish to begin and end a process.
E (exit)	Use Exit to leave a data entry screen and return to the menu system.

Logging Into CAS

To access the CAS main menu, you must log on to the Intuity computer. Unless your system has custom logins, use *sa*; the Intuity system administrator login that permits administration of all CAS features, and some Intuity administrative features and logs.

Use the procedure that follows to access the CAS application.

1. Enter **sa** at the following prompt.

   `Welcome to USL UNIXC System V Release 4.2 Version 1 Consol Login:`

2. Enter the **sa** login password at the following prompt.

   `Password:`

3. Enter your terminal type at the following prompt.

   `TERM=[AT386]?`

   Press **ENTER** to use the AT386 terminal type.

4. The system displays the Intuity Administration menu shown in Figure 1-1. Select `Call Accounting System (CAS)` to access the CAS main menu.

NOTE:
The first time you use the CAS application, you must perform a short setup process before accessing the complete menu system (see appendix B, *Installing CAS* for details). Otherwise, you are ready to perform any procedure described in this manual.

Logging Out of CAS

Logging out of CAS includes returning to the Intuity system's main menu and then exiting the Intuity system. Do so as follows.

1. Press **E** (exit) to leave a data entry screen and return to the CAS menu system.

2. Press **Cancel** (F6) from any menu to reach the CAS main menu; then press **E** (exit), then **ENTER**, to reach the Intuity system main menu.

3. Press **Cancel** (F6) to exit the Intuity system and display the following message:

   `Welcome to USL UNIX System V Release 4.2 Version 1 Console Login:`

   You are logged out of the system.

Getting Started

The level of CAS customization performed by the service technician who sets up your system varies according to your company's size and the availability of in-house expertise. The following checklist helps to determine your system's phase of implementation and references procedures to accomplish the tasks involved in each phase.

Read the questions in the checklist. If you answer yes, check the box and proceed to the next question; if no, complete the procedures referenced before going to the next question. When all boxes are checked, CAS is fully operational.

Check If Yes		Information and References
	1. Is the CAS software installed?	Following a CAS installation, the Intuity main menu includes the `Call Accounting System (CAS)` option. Generally a system arrives at a customer site with software installed. If you need it, appendix B contains complete instructions for software installation.
	2. Has the CAS startup process been executed?	When you select the Intuity system's `Call Accounting System (CAS)` option the first time, the startup process runs. Appendix B details this process.
	3. Is your site installed?	Site installation includes loading call rating tables (either zero-based or customized) and completing a group of data entry screens. Chapter 2 contains worksheets and descriptions for their use. Appendix B details the process.
	4. Is your organization database entered? • Via the `EDIT ORGANIZATION TABLE` function? • From an ascii file?	CAS needs your organization database to allocate call quantities and costs. Chapter 2 contains worksheets and descriptions for their use. Chapter 5 details the input processes. See *Loading the Organization Table* in chapter 5.
	5. Is your port enabled?	See *Editing CDR Port Information* in chapter 6.
	6. Is your call collection configuration correct?	See *Configuring and Testing CAS Call Record Collection* in appendix B.
	7. Do you wish to use customizing features?	To: • schedule reports* - see chapter 4 • adjust call cost* - see chapter 7 • use account codes* - see chapter 4 • set passwords - see chapter 8 • print system tables - see chapter 8

*see also chapter 2 for worksheet information

Scheduling CAS Maintenance

Use the tasks listed below (grouped according to their recommended frequency of performance) to keep the CAS application running smoothly and its data up-to-date.

- Weekly or bi-weekly tasks

  Perform a backup of CAS data to disk (using CAS) or to tape (using the Intuity module), to use for disaster recovery — see chapter 8.

- Monthly tasks
  - Update user-defined rates, based on prior month's usage, via the Edit Telephone System Configuration screen; then print the table (accessible from the Site Tables Menu) — see chapter 4.
  - Make an archive backup, if required, then clear dated call records from storage via Delete Call Records screen — see chapter 8.

- Quarterly tasks

  Call for information about carrier rate updates and order update disks if necessary; load the update via Install Updates — see chapter 8.

- Yearly tasks

  Verify the dates included in the holiday table via the Edit Holiday Table screen — see chapter 7.

- As needed
  - Adjust report schedules via the Schedule Reports screen — see chapter 4.
  - Update the account code tables via the Edit Account Code Table screen; then print the table (accessible from the Site Tables Menu) — see chapter 4.
  - Update the company organization table via the Edit Organization Table screen or the Move. . .Between functions; then print the tables (accessible from the Directory Tables Menu and the Organization Tables Menu) — see chapter 5.
  - Update CAS trunk, or other, information due to telephone system configuration changes performed with you switch administration application.

Planning for CAS Integration and Setup

2

This chapter guides users and support personnel through the process of collecting information used to configure CAS. Sample worksheets, used to enter CAS platform integration information and install a site, are included with instructions for their preparation. Blank worksheets appear in a section at the end of the chapter. It is organized as follows:

- *CAS Capacities and Features Table*
- *Using the CAS Hardware Table*
- *Using the CAS Switch Worksheet*
- *Using the Site Installation Worksheet*
- *Using the Telephone System Configuration Worksheet*
- *Using the Dialed Digit Processing Worksheet*
- *Using the Call Record Collection Configuration Worksheet*
- *Using the Organization Configuration Worksheet*
- *Using the Report Schedules Worksheet*
- *Using the Cost Adjustments Worksheet*
- *Using the Account Code Table Worksheet*
- *Worksheets*

CAS Capacities and Features Table

The table below provides reference information about CAS's capacities and features. The information listed on your worksheets defines your level of capacity consumption (for example, you enter 35 facilities on your organization worksheet — 15 more can be added at a later time) and customizes features (for example, your additions to the dialed digit processing table).

Table 2-1. Capacities and Features Table

Intuity CAS (single-site call accounting application)	
Platform: MAP 5, 40, 100	
Switch compatibility: MERLIN LEGEND, DEFINITY G1, G3, System 75	
CAS supports: ISDN, Remote Access, Color	
Toll Fraud: Hacker Tracker option	
Remote Alarms Voice Mail/Printer	
Capacities:	
Type	Maximum
Facilities	50
Access Codes	50
Call Types	75
Extension Digits	5
Max. Extension Reported	500 (grouped in units of 50)
Departments	unlimited
Cost Centers	unlimited
Account Codes	unlimited
Trunks	4000
Organization Levels	4
Call Records (bytes/record)	141
Call Records per Mb of Disk	7,000
Maximum Stored Call Records	420k (grouped in units of 70K)

CAS Hardware Table

The table below contains CAS hardware-related information. Cabling is listed separately for each switch CAS supports in appendix B.

Table 2-2. Hardware Information

Operating System:	UNIX 4.2
Minimum RAM:	8 Mb
Minimum Required Disk Space:	20 Mb

Using the Switch Information Worksheet

The table below lists the AT&T switches that support the Intuity system.

Table 2-3. Switches Supported by CAS

AT&T Switch	Release
DEFINITY G1	All
DEFINITY G3	All
System 75	Release 1 Version 3 Issue 1.7 and above
MERLIN LEGEND	All

Use this worksheet to identify basic information about the switch at your premises.

Required Switch Information Worksheet

Customer: USA Corp
Prepared By: Arthur Ghoule
Phone Number: 716-666-6666
Date: 10/31/94

Switch Location: USA Corp. Building 1, Anytown, NY
Switch Identity: G3
Manufacturer: AT&T
Software Load/Generic: Release 1 Version 1
Connect to Intuity MAP Processor Port: Comm1

Figure 2-1. Sample Required Switch Information Worksheet

NOTES:
See individual switch integration documents for detailed information regarding switches.

See appendix B, *Connecting the MAP Processor to Your Switch* for information about the CAS port selection.

Using the Site Information Worksheet

Use this worksheet to list your site's name and other general information. Enter the data from the completed worksheet into CAS's Edit Site Information screen.

Site Information Worksheet

Customer: USA Corp	
Prepared By: Arthur Ghoule	
Phone Number: 716-666-6666	
Date: 10/31/94	

Site Name: Headquarters		
Area Code: 716	Exchange: 381	
Address: 3750 Monroe Avenue		
City: Rochester	State: NY	Zip: 14534
Contact Person: J. Shmoe		
Contact Number: 381-6000		

Figure 2-2. Sample Site Information Worksheet

Using the Telephone System Configuration Worksheet

Use this worksheet to identify the telephone facilities your site uses and how to cost calls using those facilities. Enter the data from the completed worksheet into CAS's Edit Telephone System Configuration screen.

Telephone System Configuration Worksheet

Customer: USA Corp	
Prepared By: Arthur Ghoule	
Phone Number: 716-666-6666	
Date: 10/31/94	
Page: 1 Of: 1	
Trunk Group: 9999	Facility: SEC
# of Trunks:	Dial Access Code: 9999
Rate (enter -1 for tariff, or an amount in cents): -1	Type:
Carrier: 1	Incoming Calls: C
Trunk/Line: 999	
Trunk Group: 1	Facility: CO
# of Trunks: 5	Dial Access Code: 9
Rate (enter -1 for tariff, or an amount in cents): -1	Type:
Carrier: 0	Incoming Calls: C
Trunk Line: 801, 802, 803, 804, 805	
Trunk Group: 2	Facility: WATS4
# of Trunks: 3	Dial Access Code: 890
Rate (enter -1 for tariff, or an amount in cents): 6¢	Type: M
Carrier: 0	Incoming Calls: N
Trunk Line: 821, 822, 823	

Figure 2-3. Sample Telephone System Configuration Worksheet

Make as many copies of the *Telephone System Configuration* worksheet as required, making certain the pages are numbered.

1. Collect the following sources of information to identify every telephone service used at the site, start with the Central Office (CO) facility:

   - Use Intuity's switch administration application to display facility, access code, and trunk assignments for the switch.
   - Monthly invoices of telephone services such as WATS, TIE, and FX lines to compute the average cost of calls using these services.

   NOTE:
   If the site uses AT&T or MCI as a secondary carrier accessed by dialing 10288 or 10222 (as appropriate), enter the following line of information. (This configuration of trunk group 9999 is required for CAS's proper internal functioning.)

   9999 (trunk group), SEC (facility name), 1 (number of trunks), 9999 (dial access code), -1 (rate), blank (rate type), 0 (if secondary carrier is AT&T) or 1 (if it is MCI), N (incom calls), and 9999 (trunk).

2. Fill in a trunk group number — 1 to 9998.

3. Fill in the facility name. The names of facilities can be 1 to 5 characters. We recommend entering names that are descriptive (for example, T-NY to identify a TIE line to New York). CAS uses the following naming conventions:

   a. CO (Central Office — regular services provided by your local and long distance carriers. If "virtual WATS banding" is a long distance service at the site, identify it as CO)

   b. WATS*n* (outbound, band n = 0 to 9 WATS, billed by usage)

   c. IWTS*n* (inbound, band n = 0 to 9 WATS, billed by usage)

   NOTE:
   The following names are reserved by the system and may not be used: LOCAL, LATA, MTS, IS-IL, IS-OL, OS-IL, OS-OL, IDDD, SPCL, and ZERO+.

4. Fill in the number of trunks in the group (this value appears in the Telephone System Configuration database listing).

5. Fill in the dial access code. Typically, this is a one- to three-digit code used to place an outside call via a trunk in this group. If you do not have this information, fill in the first trunk number for this group when you complete step 9.

6. For the CO trunk group:

a. Enter a rate of -1 to indicate tariff table costing. Leave the rate type field empty.

b. If the primary carrier for this site is AT&T, enter 0 under carrier; if MCI (or any other carrier with similar rates), enter 1.

7. For all other groups — WATS, FX, or TIE:

   a. Enter the average rate — 0 to 32000 cents — to cost a call, indicating the rate type: M = per minute or C = per call, computed from one or more past telephone bills for this service.

   b. Leave the carrier field empty. (When entering data into the screen, allow the default to remain.)

8. Indicate if incoming calls should be either discarded (enter D), accepted at no cost (enter N), or costed at the rates set in 6a or 7a (enter C).

9. List all trunks belonging to this group. These numbers correspond to the "line" reported in MERLIN LEGEND call records; access code used, access code dialed, circuit ID, or dialed access code in Definity G1/G3 and System 75 call records. (You can consult Intuity's switch administration application for procedures to display this information.)

10. If there are more trunk groups to enter, skip a line (or go to another page if this makes it more readable) and repeat steps 1 to 9.

Using the Dialed Digit Processing Worksheet

Use this form to modify the built-in table of special numbers and/or to identify other numbers for special processing. Use the completed form for input into the Edit Dialed Digit Processing screen.

Complete this form if any of the cases below apply:

- The secondary carrier at the site is not MCI.
- CAS is using zero-based costing and you wish to add flat rates to a group of calls.
- The rates listed for 900 numbers, information, or dial-it local services in table 2-4 are not correct for the site.
- Users at the site place local voice mail calls.
- When speed dialing a number, the speed dial code appears in the call record instead of the number.
- When using TIE lines, the switch outputs characters in the dialed number field that are not valid phone numbers:
  - RNX codes for on-net calls
  - Access codes in a tandem or remote access call
- Users at the site want to mask sensitive phone numbers.

CAS includes a default Dialed Digit Processing table with values similar to the pre-printed form that follows.

Make as many copies of the *Dialed Digit Processing Worksheet* as required, making certain the pages are numbered.

Table 2-4. Dialed Digit Processing Defaults

Search Pattern		Replace Pattern						
Dialed Digits	Trunk Group	Cost Method	Rate (cents)	Trunk Group	Call Type	Dialed Digits	Substitute Digits?	
0%		T	0		Zero+		N	operator assisted (OA)
011????????%		T				0%	N	international (not OA)
102220%		T	0	9999	Zero+	011%	Y	MCI operator assisted
10222011%		T		9999		011%	Y	MCI int'l. (not OA)
10???0%		T	0		Zero+	0%	Y	IXC operator assisted
10???011%		T				011%	Y	IXC int'l. (not OA)
1800???????%		C	0		Spcl		N	toll free call
1900???????%		M	50		Spcl		N	900 service numbers
411		C	43		Spcl		N	local information
5551212		C	43		SPCL		N	local information
800???????%		C	0		SPCL		N	toll free call
900???????%		M	50		SPCL		N	900 service numbers
911		C	0		SPCL		N	emergency
976????		M	50		SPCL		N	dial-it local services
?		D						incompletely dialed call
?11		C	0		SPCL		N	general x11 telephone srvc.
?411		C	43		SPCL		N	local information
?5551212		C	43		SPCL		N	local information
??		D						incompletely dialed call
???		D						incompletely dialed call
???5551212		C	60		SPCL		N	long distance information
????		D						incompletely dialed call
????5551212		C	60		SPCL			long distance information
?????		D						incompletely dialed call
??????		D						incompletely dialed call

1. Identify the dialed digits that require additional processing and enter their dialing pattern in the Dialed Digits column, under Search Pattern. See the steps 1a. through 1i. for special cases.

   Define dialing patterns using the appropriate sequence of digits (0 - 9), and/or symbols (except ? and %). Use ? and % as wild cards:

   ? represents any single character in that position. For example, "385????" is any 7-digit number with 385 as a local exchange.

   % represents any number of trailing characters. Use only at the end of the pattern. For example, 0%" is any number starting with 0.

   a. If the secondary carrier at the site is not MCI, look up the entries 102220% and 10222011% in the form with the pre-printed values and replace them by the correct carrier code — for example, 102880% and 10288011% for AT&T.

   b. If the " dial-it" service exchange is not 976, find the 976???? entry (in the form with the pre-printed default values) and replace it with the proper number.

   c. If users at the site place calls that include dialing a pound (#) or asterisk (*) after the number called, add the line entries in table that follows.

Table 2-5. Dialed Digit Processing Entries

Search Pattern		Replace Pattern					
Dialed Digits	Trunk Group	Cost Method	Rate (cents)	Trunk Group	Call Type	Dialed Digits	Substitute Digits?
#%		T	0				N
*%		T	0				N
???????#%		T	-1			???????	Y
???????*%		T	-1			???????	Y
????????#%		T	-1			????????	Y
????????*%		T	-1			????????	Y
?????????#%		T	-1			?????????	Y
?????????*%		T	-1			?????????	Y
??????????#%		T	-1			?????????	Y
??????????*%		T	-1			?????????	Y
???????????#%		T	-1			?????????????	Y
???????????*%		T	-1			?????????????	Y

d. If the site uses CAS zero-based rating, add the line entries to identify 7-digit local calls and/or any other digit patterns you wish to identify as local calls. This ends the procedure; you may define another line item.

e. If users at the site place local voice mail or auto attendant calls, enter ?1?????????% and ?0?????????%. Complete step 3b (with cost method = C and rate = **0** cents) and step 4a.

f. If the site reports speed dialed codes as part of the dialed number, enter the codes a they appear in the SMDR record followed by % — for example, if "#3" is the speed dial code for a number , enter #3%. Complete steps 3c, 5a, and 6a.

g. If the site has TIE lines to a remote switch, identify all off-net access codes from the remote switch, then list each entry followed by % — for example, a site can use its TIE line to place local calls from the remote switch by accessing the TIE facility, then dialing 9; in this case, enter 9%. Complete steps 2, 3, 5b, and 6a.

h. If the site has a private network and uses RNX codes to dial other network subscribers, identify all RNX codes and their destinations. Then list every RNX code followed by **????**. Complete steps 2, 3c, 5c, and 6a.

i. If users wish to mask sensitive numbers, list the dialed numbers of interest — for example, to mask calls to 385-6440, enter 3856440. Complete steps 3c, 4b, 5d, and 6a.

2. Fill in the Trunk Group.

   This column is typically blank unless you are working with dialed numbers in a TIE or private network context. If so, identify the group associated with the network or TIE line calls. Refer to the *Telephone System Configuration* worksheet for trunk group numbers.

3. Fill in the Cost Method and a Rate or Trunk Group as follows:

   a. To discard calls with this search pattern, enter Cost Method D. This ends the procedure; you may define another line item.

   b. To cost per minute, enter Cost Method M, or per call, enter C. Then enter the Rate in cents. To change the defaults in the form with pre-printed values, simply cross out the printed values and enter the user's choices.

   c. To indicate costing normally associated with the facility used, enter Cost Method T and leave the Trunk Group blank.

   d. To indicate the costing associated with a different facility, enter Cost Method T. Then enter the Trunk Group of interest. Refer to the *Telephone System Configuration* worksheet for trunk group numbers.

4. Fill in a Call Type from the set of existing call type names in your system; leave blank to indicate no change from standard call type processing. See steps 4a. and 4b. for special cases.

   The list of built-in call types appears in the table below; other call types come from Facility names in the Telephone System Configuration screen.

   a. To report the voice mail local calls from step 1e, enter LOCAL.

   b. To report specially " masked" numbers from step 1i, enter SPCL.

Table 2-5. Default Call Types

Call Type	Description
FX	Foreign Exchange call
INCOM	Incoming call
IS-IL	In-State, In-LATA
IS-OL	In-State, Out-of-LATA
IWATSn	Incoming (only) band n WATS call
LATA	Local Access Transport Area (generic)
LOCAL	Generally a 7-digit call
OS-IL	Out-of-State, In LATA
OS-OL	Out-of-State, Out-of-LATA
SPCL	Special call (800-, 900- numbers
TIE	Tie line call
WATSn	Outgoing (or incoming/outgoing) band n WATS
ZERO+	Operator assisted calls

5. To cost the call and/or report it as some other dialed digits, fill out the Dialed Digits under Replace Pattern. A blank means no change. See steps 5a. to 5d. for details on special cases.

   - This pattern is based on your entry in step 1, using a similar format. Every digit represented by a **?** in the search pattern is matched to a **?** in the replace pattern by its position from the left (first, second, etc.). For example, replacing 1716385???? with 385???? results in 1-716-385-6440 reported as (local) 385-6440.

   - Trailing digits represented by a % in the search pattern are matched to a % in the replace pattern (if a % is not present in the replace pattern, the digits are dropped). For example, replacing 10222% with % results in 10222-1-716-385-6440 (MCI) reported as (AT&T) 1-716-385-6440.

- If there are less ?s to replace the search pattern, the right-most matches are discarded. For example, replacing ?385???? with 385???? results in 1-385-6440 reported as 385-1644. A way to correct this problem is to search for ?385% and replace it with 385%.

a. To process a telephone number instead of its speed dialed code, enter the telephone number followed by %. For example, if in step 1f you enter #3% to identify #3 as a speed dial code for AT&T's equal access prefix, enter 10288% now. Complete step 6a.

b. To remove an off-net access code from the dialed number of a TIE call, simply enter %. For example, if in step 1g you entered 9%, enter % now. Complete step 6a.

c. To report the rate center of a private network call — RNX???? in step 1h — enter the proper area code and exchange, followed by ????. For example, if you entered 333???? to identify RNX code 333 and this code reaches the 716/385 area, enter 716385????. Continue with step 6.

d. To mask sensitive numbers identified in step 1i, replace the four rightmost numbers by 9999. For example, to mask calls to 3856440, enter 3859999. Continue with step 6.

6. If you entered a replace pattern for dialed digits, fill in Substitute Digits?

   Enter Y (yes) to store the pattern specified in step 5, which will then appear on reports as the dialed number.

   Enter N (no) to keep the number received from the switch. CAS uses the pattern in step 5 to process the call, while listing the original number on reports.

Using the Call Record Collection Configuration Worksheet

Use this worksheet to identify the call detail recording (CDR) format of data coming from the switch and other local information. Use the completed worksheet for input into the CDR Collection Information screen.

NOTE:
Shaded worksheet areas indicate default entries used for input into the CDR Collection Information screen. Do not change these defaults.

Call Record Collection Information

Customer: USA Corp	
Prepared By: Arthur Ghoule	
Phone Number: 716-666-6666	
Date: 10/31/94	
Page: 1 Of: 1	

Collection Device: direct	
Call Record Format: g1g3-lsu12**	
Communication Type: 1	
Time Zone: ☐ 4 hours (Atlantic) ☐ 5 hours (Eastern) ☒ 6 hours (Central) ☐ 7 hours (Mountain) ☐ 8 hours (Pacific) ☐ 10 hours (Alaska) 11 hours (Hawaii)	Daylight savings time observed: ☒ Yes ☐ No
Direct PBX Interface Parameters:	PBX Port Baud Rate: 1200 PBX Port Data Bits: 8 PBX Port Stop Bits: 1 PBX Port Parity: None

Figure 2-4. Sample Call Record Collection Information Worksheet

** switch type = DEFINITY G1/G3 - LSU non-ISDN - 12 digit account code

The table that follows lists other formats available.

Format	Switch/Call Record Description
g1g3-lsu5	DEFINITY G1/G3 - LSU Non-ISDN - 5 digit account code
g1ge-lsu12	DEFINITY G1/G3 - LSU Non ISDN - 12 digit account code
g1g3-lsu14	DEFINITY G1/G3 - LSU Non-ISDN - 14 digit account code
g1g3-lsu15	DEFINITY G1/G3 - LSU Non-ISDN - 15 digit account code
g1g3-u24w	DEFINITY G1/G3 - 24 word ISDN unformatted standard
g1g3-f24w	DEFINITY G1/G3 - 24 word ISDN formatted expanded
g1g3-auth	DEFINITY G1/G3 - 24 word ISDN unformatted - auth code ver.
S25-f18	System 25 MERLIN - 18w formatted - 15 digit account code (not for use with Intuity)
legendbase	AT&T MERLIN LEGEND - standard with remote access processing (see note below)
legendisdn	AT&T MERLIN LEGEND - ISDN with remote access processing see note below)
legendspcl	MERLIN LEGEND - ISDN w/out Remote Access Processing (see note below)

NOTE:
Legendbase and legendisdn call record formats are associated with switch data interfaces designed to process remote access tandem calls as a single record. When they occur, tandem calls generate 2 records: one incoming and one outgoing. The interfaces associated with legendbase and legendisdn draw information from both records to accurately cost and report the call. The switch interpreter associated with the legendspcl format cannot handle remote access tandem calls.

5. Copy the *Call Record Collection Information Worksheet* from this chapter.
6. Enter the following information:
   a. Call Record Format. Select the format of SMDR received from the switch.
   b. Time Zone. Select the zone as a function of hours from Greenwich mean time.
   c. Indicate whether or not daylight savings time is used at the site.
   d. Change the default Direct PBX Interface Parameters if necessary.

Using the Organization Configuration Worksheet

Use this worksheet to identify the grouping of telephone extensions and their users within the hierarchy of the company organization.

Use the completed form for input into the Edit Company Organization screen.

Organization Configuration Worksheet

Customer: USA Corp
Prepared By: Arthur Ghoule
Phone Number: 716-666-6666
Date: 10/31/94
Page: 1 Of: 1

Department:		**File Name:**
Cost Centers	**Extensions**	**Personnel Information**
Publications	385	Wingnut, A.
	386	Notginhsaw, Martha
PROD-DOS	390	Full, Wanda
PROD-UNIX	391	Smith, Abe
PROD-HDWR	395	Quick, Virgil
	396	Thergos, Connie
	397	Lee, R.E.

Figure 2-5. Sample Organization Configuration Worksheet

CAS structures the company organization as a hierarchy — a "site" branches into "departments" and these, into "cost centers." Cost centers own the telephone "extensions" charged with the calls placed or received by "personnel" (extension users).

Obtain the list of all departments, its associated cost centers, extensions, and personnel. Prepare a separate *Organization Configuration* worksheet for each department. Blank worksheets are located at the end of this chapter. Make as many copies of the *Organization Configuration* worksheet as required, making certain the pages are numbered.

1. Fill in the department name (1 to 15 characters) at the top of this worksheet. We recommend naming departments as single words, using such separators as - (hyphen) or _ (underline) if necessary — for example, New-Sales — because this speeds the sorting process for reports.
2. Fill in the name of a cost center (1 to 15 characters). As in department names, we recommend using single words — for example, 505-Sales.

   If a department does not have cost centers, enter the department name under the cost center column.
3. List all extensions (using up to 5 digits) associated with this cost center under the column ext.
4. Add the name (0 to 39 characters) of the extension users (optional). We recommend entering users' names in the format last name, first name — for example, Doe, Jane — because directory listings print alphabetically.

   If an extension has multiple users, enter the name that the CAS manager wants to appear in organization detail reports. Then add the names of the other extension users (these names will appear in directory listings, but not in organization reports).
5. Skip a line and repeat steps 2 to 4 until all cost centers, extensions, and personnel associated with the department are identified.

Using the Report Schedules Worksheet

Use this worksheet to identify the run times, frequency, reporting period, and output parameters for up to 150 call accounting reports or system tables.

The tables following the sample below list the code for each report and table.

Report Schedules Worksheet

Customer: USA Corp
Prepared By: Arthur Ghoule
Phone Number: 716-666-6666
Date: 10/31/94
Page: 1 Of: 1

Report Number: 1	Report Code: ACD	Report/Table Title: Account Code Detail Report

Frequency:
Yearly __x__ Quarterly ____ Monthly ____ Biweekly ____
Weekly___ Daily ___ Hourly ____ Once ____
Every ____ days

Next Run Date: Time (HH:MM): 12:00 Date (MM/DD/YY): 1/31/95

Output Method & Device:	METHOD	DEVICE
__x__ Print Compressed	P	wide 570|lp
__ Print Uncompressed	P	lp
__ Other	P (pipe), R (redirect), A (append)	

Reporting Period (from Start of Period 1 / 1 / 94)
Year __x__ Quarter ___ Month ___ Bi-week ___
Week ___ Day ___ Hour ___ Once ___
All calls in storage (ignore Start of Period) ____
Number of days:

Increment Period: Yes __x__ No ____

Figure 2-6. Sample Report Schedules Worksheet

Code	Report Title
ACD	Account Code Detail Report
ACDR	All CDR Analysis Reports
ACR	Abandoned Call Report
ACS	Account Code Summary Report
ASBS	All Summary Reports
BDT	Busy Day Trunk Utilization Report
BHT	Trunk Group Busy Hour Report
CSI	City/State Report for Incoming Calls
CSO	City/State Report for Outgoing Calls
CSSn	Cost Center Summary Report (n=0 to 9)[1,2]
CTYP	Call Type Report
DATE	Date Report
DSSn	Department Summary Report (n=0 to 9)
DURA	Duration Report
ESSn	Extension Summary Report (n=0 to 9)[1,2]
NPAI	Area Code Summary Report For Incoming Calls
NPAO	Area Code Summary Report For Outgoing Calls
ODSn	Organization Detail Report (n=0 to 9)[1,2]
OSSn	All Organization Summary Reports (n=0 to 9)[1,2]
SRn	Selection Report (n= 1 to 25)[2]
TIME	Time of Day Report
TRNK	Trunk Group Report

Code	Table Title
ACT	Account Code Table
ADT	All Directory Tables
ALCT	All Costing Tables
AOT	All Organization Tables
AST	All System Tables
CADJ	Cost Adjustments
CARR	Carrier Information
CDRC	CDR Collection Information
COMP	Company Information
CPI	CDR Port Information
CRC	Call Reporting Configuration
DDIR	Department Directory
DDP	Dialed Digit Processing Table
EDIR	Extension Directory
HOLT	Holiday Table
ODIR	Organization Table
ORS	Organization Selection Report Criteria
PDIR	Personnel Directory
SCHR	Report Schedules

1 The *n* in the report code of an organization report corresponds to the last digit of its report number at the time it was defined. For example, a Cost Center Summary defined as report number **75** corresponds to **CSS5**.

2 To schedule a Selection or Organization report, make certain to define it first. See *Generating Selection Reports* or *Generating Organization Reports* in this chapter.

SITE	Site Information
SR	Selection Report Criteria
TSC	Telephone System Configuration

Blank worksheets are located at the end of this chapter. Make as many copies of the *Reports Schedules Worksheet* as required, making certain the pages are numbered.

1. Fill in the Report Number, then enter the Report Code and title from the table.
2. Choose the Frequency of printouts.
3. Fill in the Next Run Date of the first printout (CAS maintains future run dates according to the frequency defined in step 2).
   a. Enter the Time in a 24-hour clock format (for example, 23:00). If you schedule several call accounting reports, we recommend staggering the times to 30 minutes apart.
   b. Enter the Date (for example, 12/1/90). If you schedule a call accounting report, make certain that this date falls after the dates of the calls you wish to include in the report (see step 5).
4. Select the Output Method and Device. This is how and where to send the report output.
   a. Users who plan to print on 80-column paper should check Print Compressed (the default setting).
   b. Users who plan to print on 132-column paper should check Print Uncompressed.
   c. To use other programming choices, choose the appropriate method — P (pipe), R (redirect), or A (append — to the named device). Indicate the device as a UNIX path-name up to 45-characters long, a dedicated printer port, or an existing file or program. The pipe method allows additional pipes (|), redirects (>), and appends (>>) in the device definition.
5. For call accounting reports other than an Abandoned Calls or Selection Report, complete the following:
   a. Check the Reporting Period and enter the Start of Period date. This sets the range of dates to include calls in the report — for example, a month's period starting 6/1/94 includes calls dated 6/1/94 to 6/30/94.
   b. Choose whether or not to Increment Period on every run.
      - Check Yes to advance the "start of period" automatically on the next run. Call accounting reports with a reporting period other than "all calls in storage" typically require incrementing periods, to include calls from the next period.
      - Check No, to use the same reporting period in every run.

Using the Cost Adjustments Worksheet

Use this worksheet to specify how to adjust the cost of calls according to its call type — for example, to add taxes to local and long distance calls, to mark up (or discount) calls in reselling services to clients, or to correct the call duration reported by the switch.

Use the completed worksheet for input into the Edit Cost Adjustments screen.

Cost Adjustments Worksheet

Customer: USA Corp
Prepared By: Arthur Ghoule
Phone Number: 716-666-6666
Date: 10/31/94
Page: 1 Of: 1

Call Type	Tax %	Markup	Surcharge	Minimum Charge (cents)	Minimum Duration (H:MM:SS)	Network Correction (H:MM:SS)
IDDD	0	0	0	0	0:00:30	0:00:15:
INCOM	0	0	0	0	0:00:30	0:00:00:
IS-IL	0	0	0	0	0:00:30	0:00:15:
IS-OL	0	0	0	0	0:00:30	0:00:15:
IWTS0	0	0	0	0	0:00:30	0:00:15:
IWTS1	0	0	0	0	0:00:30	0:00:15:
IWTS2	0	0	0	0	0:00:30	0:00:15:
IWTS3	0	0	0	0	0:00:30	0:00:15:
IWTS4	0	0	0	0	0:00:30	0:00:15:
IWTS5	0	0	0	0	0:00:30	0:00:15:
IWTS6	0	0	0	0	0:00:30	0:00:15:
LATA	0	0	0	0	0:00:30	0:00:15:
LOCAL	0	0	0	0	0:00:30	0:00:15:
OS-IL	0	0	0	0	0:00:30	0:00:15:
OS-OL	0	0	0	0	0:00:30	0:00:15:
SPCL	0	0	0	0	0:00:30	0:00:15:

Figure 2-7. Sample Cost Adjustments Worksheet

Blank worksheets are located at the end of this chapter. Make as many copies of the *Cost Adjustments* worksheet as required, making certain the pages are numbered. This worksheet includes a list of default call types with the values shown in the sample. Follow steps 2 to 4 below to change the defaults.

If you defined non-tariffed facilities in the Telephone System Configuration screen, CAS automatically adds the facility names as new call types with default values that result in neither duration nor cost.

1. Fill in the Call Type. This is the name of a non-tariffed facility from the Telephone System Configuration form.
2. Add values for the following items:

   a. Tax (0 to 100 percent)

   b. Markup (-100 to 100 percent)

   c. Surcharge (-32000 to 32000 cents)

   d. Minimum Charge (0 to 32000 cents)

   NOTE:
   CAS uses these values to compute the reported cost of a call, as the maximum of (i) or (ii), below:

   - (1 + Tax %) x (call cost + (call cost x markup %) + surcharge):
   - the minimum charge

2. Enter a Minimum Duration, that is, a length of time in hours, minutes, and seconds (in the range 0:00:00 to 9:59:59) that defines a valid call. SMDR records with a call duration lower than this value are discarded.
3. Enter a Network Correction, that is, a length of time in hours, minutes, and seconds (in the range 0:00:00 to 9:59:59) to subtract from the call duration. This accounts for the non-billable time between dialing a number and having the call answered.

Using the Account Code Table Worksheet

Use this worksheet to identify account code numbers reported by the switch and to associate account names to code numbers.

Account Code Table Worksheet

Customer: USA Corp
Prepared By: Arthur Ghoule
Phone Number: 716-666-6666
Date: 10/31/94
Page: 1 Of: 1

Account Code	Account Name	Account Code	Account Name
10021	ABC Company		
10025	DEF Company		
10030	GHI Company		
10044	KLM Company		
10052	NOP Company		

Figure 2-8. Sample Account Code Table Worksheet

Blank worksheets are located at the end of this chapter. Make as many copies of the *Account Code Table* worksheet as required, making certain the pages are numbered.

Use the completed worksheet to input the information listed below into the Account Codes screen.

- Account Code —a 1- to 15-digit code output by your switch that corresponds to the client account, project code, etc., as programmed for the switch. Consult the documentation for switch administration to display this information.
- Account Name — 1 to 20 alphanumeric characters, including blanks, corresponding to the name associated with the client account or project code.

Worksheets

Required Switch Information Worksheet

Customer:
Prepared By:
Phone Number:
Date:

Switch Location:
Switch Identity:
Manufacturer:
Software Load/Generic:
Connect to Intuity MAP Processor Port:

Site Information Worksheet

Customer:
Prepared By:
Phone Number:
Date:

Site Name: Headquarters
Area Code: Exchange:
Address:
City: State: Zip:
Contact Person:
Contact Number:

Telephone System Configuration Worksheet

Customer:	
Prepared By:	
Phone Number:	
Date:	
Page:	Of:

Trunk Group: 9999	Facility: SEC
# of Trunks:	Dial Access Code: 9999
Rate (enter -1 for tariff, or an amount in cents): -1	Type:
Carrier: 1	Incoming Calls: C
Trunk/Line: 999	
Trunk Group:	Facility:
# of Trunks:	Dial Access Code:
Rate (enter -1 for tariff, or an amount in cents):	Type:
Carrier:	Incoming Calls:
Trunk Line:	
Trunk Group:	Facility:
# of Trunks:	Dial Access Code:
Rate (enter -1 for tariff, or an amount in cents):	Type:
Carrier:	Incoming Calls:
Trunk Line:	

Dialed Digit Processing Worksheet

Customer:

Prepared By:

Phone Number:

Date:

Page: Of:

Search Pattern		Replace Pattern					
Dialed Digits	Trunk Group	Cost Method	Rate (cents)	Trunk Group	Call Type	Dialed Digits	Substitute Digits?

Call Record Collection Information

Customer:	
Prepared By:	
Phone Number:	
Date:	
Page:	Of:

Collection Device: direct	
Call Record Format:	
Communication Type: 1	
Time Zone: ☐ 4 hours (Atlantic) ☐ 5 hours (Eastern) ☐ 6 hours (Central) ☐ 7 hours (Mountain) ☐ 8 hours (Pacific) ☐ 10 hours (Alaska) 11 hours (Hawaii)	Daylight savings time observed: ☐ Yes ☐ No
Direct PBX Interface Parameters:	PBX Port Baud Rate: PBX Port Data Bits: PBX Port Stop Bits: PBX Port Parity:

Organization Configuration Worksheet

Customer:

Prepared By:

Phone Number:

Date:

Page: Of:

Department:		**File Name:**
Cost Centers	**Extensions**	**Personnel Information**
		.

Report Schedules Worksheet

Customer:
Prepared By:
Phone Number:
Date:
Page: Of:

Report Number:	Report Code:	Report Title:

Frequency:

Yearly ___ Quarterly ____ Monthly ____ Biweekly ____
Weekly___ Daily ___ Hourly ____ Once ____
Every ____ days

Next Run Date: Time (HH:MM): Date (MM/DD/YY):

Output Method & Device:	METHOD	DEVICE
___ Print Compressed		
___ Print Uncompressed ___ Other	P (pipe), R (redirect), A (append)	

Reporting Period (from Start of Period: / /)
Year ___ Quarter ___ Month ___ Bi-week ___
Week ___ Day ___ Hour ___ Once ___
All calls in storage (ignore Start of Period) ____
Number of days:

Increment Period: Yes ____ No ____

Cost Adjustments Worksheet

Customer:

Prepared By:

Phone Number:

Date:

Page: Of:

Call Type	Tax %	Markup	Surcharge	Minimum Charge (cents)	Minimum Duration (H:MM:SS)	Network Correction (H:MM:SS)

Account Code Table Worksheet

Customer:

Prepared By:

Phone Number:

Date:

Page: Of:

Account Code	Account Name	Account Code	Account Name

Generating and Scheduling Reports

3

This chapter describes all report generating functions selected from the Reports menu. It is organized as follows:

- *Generating ANI/Demographics Reports*
- *Generating Selection Reports*
- *Generating Organization Reports*
- *Generating Account Code Reports*
- *Generating CDR Analysis Reports*
- *Scheduling Reports*

The last section, *Application Tips*, provides suggested uses of CAS reports.

Generating ANI/Demographics Reports

CAS offers five reports that support the *Automatic Number Identification (ANI)* and *Abandoned Call* features if an ISDN service and a Primary Rate Interface (PRI) are available on premises.

- The two area code summaries, one for outgoing calls and one for incoming calls, provide total and average values for the number, duration, and cost of calls grouped by:
  - area code dialed (outgoing) or of origin (incoming)
  - (calls to toll-free 800-numbers— outgoing only)
  - (calls to paid-service 900-numbers— outgoing only)
  - INT (international direct or operator assisted calls— outgoing only)
  - LOCAL (calls to/from local exchanges)
  - OTHER (calls to 411, 911, 0, etc.— outgoing only)
- The two city/state summaries, one for outgoing calls and one for incoming calls, provide the distribution of calls among the top fifty most frequently connected cities. The reports list for each city with more than 9 calls, the number of calls from all city exchanges and the percentage this value represents over the reporting period.
- The Abandoned Call Report provides detailed information on incoming calls that were terminated by the caller. The report lists all the stored details — including the calling number, if provided by the switch — of individual calls that fall in the range of time and dates specified, sorted by the time of the call.

Sample reports appear in appendix C.

To define and/or run a report, proceed as follows:

1. From the CAS main menu, select:

   > Reports Menu
   > ANI/Demographics Reports Menu
   > *any ANI/demographic report*

   The selected report screen appears.

2. For an Abandoned Call Selection Report, (selection screen shown below), do one of the following:

```
COMMANDS: Update Generate Exit
Update - <ESC> to save, ^C to cancel, <RETURN> for next field
--------------------------------------------------------------------------------
                        ABANDONED CALL SELECTION REPORT
--------------------------------------------------------------------------------
        Date Range: Aug 12 1994     to     Aug 12 1994
        Time Range: 00:00           to     23:59
```

a. To change the display, press **U** (update) and enter a date in the Date Range field — from 1/01/70 to 12/31/2020 — and a Time Range — from 00:00 to 23:59. No other entries are necessary. Then press **ESC** to save your entries.

b. If you are only defining the report for scheduling it at a later time, press **E** (exit) and proceed to step 4; to run the report now, press **G** (generate).

A screen similar to the one below appears:

```
COMMANDS: Update Generate Exit
          Update the displayed record
--------------------------------------------------------------------------------
                        ABANDONED CALL SELECTION REPORT
--------------------------------------------------------------------------------
         Output Method: P
         Output Device: wide 570 | lp
```

c. To change values, press **U** (update), enter the values in the Output Method and Device fields, and press **ESC**. Typical values are:

- To display on the terminal, enter **T**. A device is not required.
- To print, enter **P** and device **wide 570 | lp** (compressed) or **lp** (uncompressed).
- To save for later viewing (see *Viewing Reports* in chapter 8), enter **R** (redirect) or **A** (append) and device *filename* (where *filename* is up to 10 characters long).

d. When complete, press **G** (generate). Proceed to step 4.

3. For all other reports, a screen similar to the one below appears:

```
COMMANDS: Update Generate Exit
          Update the displayed record
--------------------------------------------------------------------------------
                    AREA CODE SUMMARY REPORT FOR INCOMING CALLS
--------------------------------------------------------------------------------
      Reporting Period: D
       Start of Period: Aug 12 1994
         Output Method: P
         Output Device: wide 570 | lp
```

a. To change the display, press **U** (update) and enter values for the following fields:

- `Reporting Period`. Enter the letter or number indicator to select one of these periods: **y** (year), **q** (quarter), **m** (month), **b** (bi-week, **w** (week), **d** (day), or 1 to 99 days from the date in the `Start of Period` field, or **a** (all) (all calls in storage — start of period entry is not required).
- `Start of Period`. Enter a date. This value, together with the reporting period, sets a range of dates for calls in the report.
- `Output Method` and `Output Device`. Typical values are:
  - To display on the terminal, enter **T**. A device is not required.
  - To print, enter **P** and device **wide 570 | lp** (compressed) or **lp** (uncompressed).
  - To save for later viewing (see *Viewing Reports* in chapter 8), enter **R** (redirect) or **A** (append) and device *filename* (where *filename* is up to 10 characters long).

b. When finihsed with your entries, press **ESC**, then **G** (generate).

4. The procedure is complete; if you sent the report to the terminal, the screen now displays the report, one page at a time. Move through the report using the arrow, **ENTER**, or **PageUp** and **PageDn** keys.

   When the menu displays, you may initiate another function or exit CAS.

Generating Selection Reports

The Selection Report is one of CAS most versatile tools, used primarily to pinpoint details (or summarize trends) in problem areas discovered by other reports. You may specify up to 25 distinct reports by setting any combination of the following selection criteria:

- A range of times, dates, duration, cost, and/or extension numbers
- The matching name or number pattern for department(s), cost center(s), account code(s), and/or dialed number(s)
- A single trunk and/or a single call type

Once defined, Selection Reports can be generated on demand or they can be scheduled. Sample reports appear in appendix C.

To define a Selection report, proceed as follows:

1. From the CAS main menu, select:

```
> Reports Menu
    > Generate Selection Report
```

A screen similar to the one below appears.

```
COMMANDS: Next Previous Update Generate Exit
          Find Previous record
--------------------------------------------------------------------------------
                                SELECTION REPORT
--------------------------------------------------------------------------------
     Report Number: 28
        Date Range: Aug 13 1994    to    Aug 13 1994
        Time Range: 00:00          to    23:59
    Duration Range:  0:30:00       to    23:59:59
        Cost Range:      $0.00     to      $1000.00
   Extension Range:     0          to    99999
              Site:
        Department:
       Cost Center:
             Trunk:
      Carrier Type:
      Routing Code:
       Source Type:
         Call Type:
      Account Code:
     Dialed Digits:
       Report Type: D
```

Notice the Report Number on the screen (not editable). This is the number (*n* = 1 to 30) in the report code SR*n* used to identify this report for the Schedule Reports function.

2. To change the display, press **U** (update) and enter values from the list that follows. When complete, press **ESC**.

   - Date Range. Month, day, and year — from 1/01/70 (Jan 1 1970) to 12/31/2020 (Dec 31 2020).
   - Time Range. Hours and minutes in a 24 hour notation — from 00:00 to 23:59.
   - Duration Range. Hours, minutes, and seconds — from 0:00:00 to 23:59:59.
   - Cost Range. Dollars and cents — from 0.00 to 9999.99.
   - Extension Range. Valid extensions from the Organization Table.
   - Site. Leave blank.
   - Department and Cost Center. Valid names from the Organization Table or a blank (all values selected). Wild card characters are allowed — see note at the end of the list.
   - Trunk. A valid trunk number from the Telephone System Configuration or leave blank (all values selected).
   - Carrier Type. **L** (local), **P** (primary), **S** (secondary), or leave blank (all values selected).
   - Routing Code. **D** (direct), **O** (operator assisted), **I** (incoming), **T** (tandem call), or leave blank (all values selected).

- Source Type. **V** (voice), **D** (data transmission), **A** (authorization code), **Q** (abandoned calls), or leave blank (all values selected).
- Call Type. A valid call type for your system or a blank (all values selected). Call types are the names, one to 5 characters long, that describe a call. CAS costing algorithms derive call type names from the system internal list, as follows:
  - if the dialed number matches a pattern in the Dialed Digit Processing table, it follows the call type naming instructions in the table. CAS includes two built-in call types in this table:
  - SPCL Information, 800-, 900-, and other "special" numbers
  - ZERO+ Operator assisted call
  - See *Editing the Dialed Digit Processing Table* in chapter 7.
  - if the call used a non-tariffed facility, it takes the user-defined *facility name* as it appears in telephone system configuration table. These names are user-defined. See *Editing the Telephone System ConfigurationTable* in chapter 4.
  - if the call used a tariffed facility, it takes the name INCOM (for an incoming call) or one of the names in the list that follows, depending on the call destination.

IDDD	International Direct Distance Dial
IS-IL	In-State, In-LATA (custom rate systems)
IS-OL	In-State, Out-of-LATA (custom rate systems)
LATA	Local Access Transport Area
LOCAL	Local (usually, a 7-digit call)
OS-IL	Out-of-State, In-LATA (custom rate systems)
OS-OL	Out-of-State, Out-of-LATA (custom rate systems)

    NOTE:
    CAS includes a list of call types — not used by any costing algorithm — from which you can select call types for dialed digit processing or facilities for the telephone system configuration. See the complete list of built-in call types in *Edit Cost Adjustments* in chapter 7.

- Account Code. An account code number, up to 16 digits or the word UNASSIGNED (for calls without account codes) or a blank (all values selected). Wild card characters are allowed — see note below.

- Dialed Digits. Up to 12 digits, dashes, and/or wild cards (see note below) defining a telephone number pattern or a blank (all values selected). Do not enter routing codes 0, 1, 01, or 011. Use dashes for local and long distance numbers (for example, **555-1212** or **716-555-1212**), omit dashes for international numbers (for example, **44256844949**).
- Report Type. **D** (detail) or **S** (summary).

NOTE:
As noted in the preceding list, some fields allow wild card characters:

? stands for a single character in the ? position. For example, 123456 or 123999 match **123???**.

% stands for any number of trailing characters. For example, 123, 1234, or 1234567 match **123%**.

3. If you are only defining the report for scheduling it at a later time, press **E** (exit). When the screen returns to a menu display, you may initiate another function or exit CAS.
4. To run the Selection Report now, press **G** (generate).

   A screen similar to the sample below appears.

```
COMMANDS: Update Generate Exit
          Update the displayed record
-------------------------------------------------------------------------------
                          SELECTION REPORT NUMBER 5
-------------------------------------------------------------------------------
         Output Method: P
         Output Device: wide 570 | lp
```

   a. To change values, press **U** (update), enter values in the Output Method and Device fields, and press **ESC**. Typical values are:
      - To display on the terminal, enter method **T**. A device is not required.
      - To print, enter method **P**, then device **wide 570 | lp** (compressed) or **lp** (uncompressed).
      - To save for later viewing (see *Viewing Reports* in chapter 8), use method **R** (redirect) or **A** (append) and device *filename* (where *filename* is up to 10 characters long).

   b. When complete, press **G** (generate).
5. The procedure is complete; if you sent the report to the terminal, the screen now displays the report, one page at a time. Move through the report using the arrow keys, **ENTER**, or **PageUp** and **PageDown** keys.

   When the screen returns to a menu display, you may initiate another function or exit CAS.

Generating Organization Reports

CAS provides four organization reports, used to allocate telephone expenditures to the site, department, and cost center associated with extensions charged with a call. CAS presents this information in summary or detail under the Organization Reports menu:

- Organization Detail Report
- Department Summary Report
- Cost Center Summary Report
- Extension Summary Report

You may specify up to 10 distinct reports of each type by setting any combination of the following selection criteria, page break definitions, and subtitles:

- A department and/or cost center
- A range of times, call duration, and/or cost
- A type of call

Once defined, organization reports can be generated on demand or they can be scheduled. Report samples appear in appendix C.

To define an organization report, proceed as follows:

1. From the CAS main menu, select:

> Reports Menu
>> Organization Reports Menu
>>> *any organization report*

A screen similar to the one below appears:

```
COMMANDS: Next Previous Update Generate Exit
Update - <ESC> to save, ^C to cancel, <RETURN> for next field
--------------------------------------------------------------------------------
                          ORGANIZATION DETAIL REPORT
--------------------------------------------------------------------------------

        Report Number:                50
      Department Name: ACCOUNTING
     Cost Center Name:
           Start Time: 00:00
             End Time: 23:59                 Inclusion/Exclusion Options
           Page Break? N                   ---------------------------------------
            Call Type:                     1. Include Call Type
  Inclusion/Exclusion: 1                   2. Exclude Call Type

             Subtitle:

     Minimum Duration:  0:00:00                Maximum Duration: 23:59:59

               And/Or: A

         Minimum Cost:      $0.00                   Maximum Cost:  $1000.00
Enter a cost center name. (you may use wildcards)
```

2. To change the display, press **U** (update) and enter values for the selection criteria from the list that follows. When complete, press **ESC**.

   Notice the Report Number (not editable) in the sample screen above. The right-most digit is the number (*n* = 0 to 9) used to identify this report for later scheduling under the report codes:

   - ODS*n* (Organization Detail, numbers 50 to 59)
   - DSS*n* (Department Summary, numbers 60 to 69)
   - CSS*n* (Cost Center Summary, numbers 70 to 79)
   - ESS*n* (Extension Summary, numbers 80 to 89)

   - Department Name and Cost Center Name. Valid names from the Organization Table.
   - Start Time and End Time. Time of day range in a 24-hour notation.
   - Page Break. **Y** (yes) or **N** (no) for page breaks after subtotals.
   - Call Type. A blank (CAS ignores the `Inclusion/Exclusion` field — that is, all values are selected) or a valid call type to report (or not), as instructed by the value in the `Inclusion/Exclusion` field. See the explanation for the `Call` Type field in *Generating Selection Reports* in this chapter.
   - Inclusion/Exclusion. The values **1** or **2** — that is, 1 produces a report with only the call type selected, 2 produces a report containing all call types, except the one selected.
   - Subtitle. A report subtitle, up to 48 characters long.
   - Minimum Duration and Maximum Duration. Duration range in hours and minutes.

- And/Or. **A** (and) = include calls that meet both duration and cost criteria; **O** (or)= include calls that meet either duration or cost criteria.
- Minimum Cost and Maximum Cost. Cost range in dollars and cents.

3. If you are only defining the report for scheduling it at a later time, press **E** (exit). When the screen returns to a menu display, you may initiate another function or exit CAS.
4. To run the report now, press **G** (generate).

   A screen similar to the one below appears:

```
COMMANDS: Update Generate Exit
          Update the displayed record
--------------------------------------------------------------------------------
                           ORGANIZATION DETAIL REPORT
--------------------------------------------------------------------------------
      Reporting Period: D
       Start of Period: Aug 12 1994
         Output Method: P
         Output Device: wide 570 | lp
```

5. To change the display, press **U** (update) and enter values for the fields in the list that follows. When complete, press **ESC**, then **G** (generate).
   - Reporting Period. Enter the letter or number indicator to select one of these periods: **Y** (year), **Q** (quarter), **M** (month), **B** (bi-week), **W** (week), D (day), or 1 to 99 days from the date in the `Start of Period` field, or **A** (all — all calls in storage — start of period entry is not required).
   - Start of Period. Enter a date. This value, together with the reporting period, sets a range of dates for calls in the report.
   - Output Method and Output Device. Typical values are:
     - To display on the terminal, use method **T**. A device is not required.
     - To print, use method **P** and device **wide 570 | lp** (compressed) or **lp** (uncompressed).
     - To save for later viewing (see *Viewing Reports* in chapter 8), use method **R** (redirect) or **A** (append) and device *filename* (where *filename* is up to 10 characters long).
6. The procedure is complete; if you sent the report to the terminal, the screen now displays the report, one page at a time. Move using the arrow keys, **ENTER**, or **PageUp** and **PageDown** keys.

   When the screen returns to a menu display, you may initiate another function or exit CAS.

Generating Account Code Reports

CAS provides Account Code reports in both, summary and detail form:

- The Account Code Summary Report lists all active accounts in numerical order. If a name is associated with an account, it is also reported. This report is useful in charging clients for calls made on their behalf.
- The Account Code Detail Report lists itemized records of every call associated with each account. Different accounts print in different pages, so that the report is suitable as a bill for the client.

To run an Account Code report, proceed as follows:

1. From the CAS main menu, select:

> Reports Menu
>
> > Account Code Reports Menu
> >
> > > *any account code report*

A screen similar to the one below appears:

```
COMMANDS: Update Generate Exit
          Update the displayed record
--------------------------------------------------------------------------------
                          ACCOUNT CODE DETAIL REPORT
--------------------------------------------------------------------------------
      Reporting Period: D
       Start of Period: Aug 12 1994
         Output Method: P
         Output Device: wide 570 | lp
```

2. To change the display, press **U** (update) and enter values for any field in the list that follows. When complete, press **ESC**, then **G** (generate).
   - Reporting Period. Select one of these periods: **Y** (year), **Q** (quarter), **M** (month), **B** (bi-week), **W** (week), **D** (day), or 1 to 99 days from the date in the `Start of Period` field, or **A** (all — start of period is not required).
   - Start of Period. Enter a date. This value, together with the reporting period, sets a range of dates for calls in the report.
   - Output Method and Output Device. Typical values are:
     - To display on the terminal, use method **T**. A device is not required.
     - To print, use method **P** and device **wide 570 | lp** (compressed) or **lp** (uncompressed).

- To save for later viewing (see *Viewing Reports* in chapter 8), use method **R** (redirect) or **A** (append) and device *filename* (where *filename* is up to 10 characters long).

3. The procedure is complete; if you sent the report to the terminal, the screen displays the report, one page at a time. Move through the report using the arrow keys, **ENTER**, or **PageUp** and **PageDown** keys.

   When the screen returns to a menu display, you may initiate another function or exit CAS.

Generating CDR Analysis Reports

The CDR Analysis Reports — *CDR* for call detail recording — consist of eight reports used to analyze the traffic patterns in your company. Sample reports appear in appendix C.

- The Busy Day Trunk Utilization Report provides hourly summaries for the day with the greatest total call duration within the reporting period. It breaks the day into 24 one-hour slots, each listing the count, duration, and % utilization (% utilization = total duration of calls that started in a time slot ÷ the total trunk time available — that is, one hour x number of trunks in the system).
- The Call Type Report summarizes call activity by call types. It provides count, duration, and cost subtotals for every call type. The system includes a built-in list of call type names, in addition to the user-defined facility names from the Telephone System Configuration. This report helps pinpoint facility usage.
- The Duration Report sorts calls by seven duration ranges — from less than one minute, to over one hour — to highlight the length of calls. It then provides count, duration, and cost subtotals for each duration range. This report helps analyze productivity levels or possible abuse.
- The Time-of-Day Report breaks down telephone activity into 24 one-hour intervals. It provides count, duration, and cost subtotals for each hour over the entire reporting period. This report helps analyze calling patterns throughout the day.
- The Trunk Group Report provides totals and averages for the count, duration, and cost of calls routed through each trunk in your system. The listing is divided into trunk groups, to easily identify facility usage and help evaluate existing trunks.
- The Date Report provides daily totals — count, duration, and cost of calls — that indicate day-to-day traffic variance. The number of days in the report depends on the specified reporting period.

- The Trunk Group Busy Hour Report provides peak hour information on every trunk group in the system. Given all 24 one-hour slots of each day in the reporting period, the system reports the "hour" with the greatest total call duration, the day it occurred, and its % utilization ("% utilization" = total duration of calls in the trunk group that started in that time and day slot ÷ the total trunk time available — that is, one hour x number of trunks in the group).
- The Site Report provides grand totals on the count, duration, and cost of calls handled by the switch in the specified reporting period.

To run a report, proceed as follows:

1. From the CAS main menu, select:

> Reports Menu
>
> > CDR Analysis Reports Menu
> >
> > > *any CDR analysis report*

A screen similar to the one below appears:

```
COMMANDS: Update Generate Exit
          Update the displayed record
--------------------------------------------------------------------------------
                        BUSY DAY TRUNK UTILIZATION REPORT
--------------------------------------------------------------------------------
      Reporting Period: D
       Start of Period: Aug 12 1994
         Output Method: P
         Output Device: wide 570 | lp
```

2. To change the display, press **U** (update) and enter values for:
   - `Reporting Period`. Select one of these periods: Y (year), Q (quarter), M (month), B (bi-week), W (week), D (day), or 1 to 99 days from the date in the `Start of Period` field, or A (all — start of period is not required).
   - Start of Period. Enter a date. This value, together with the reporting period, sets a range of dates for calls in the report.
   - Output Method and Output Device. Typical values are:
     - To display on the terminal, method **T**. A device is not required.
     - To print, method **P** and device either **wide 570 | lp** (compressed) or **lp** (uncompressed).
     - To save for later viewing (see *Viewing Reports* in chapter 8), use method **R** (redirect) or **A** (append) and device *filename* (where *filename* is up to 10 characters long).

3. When complete, press **ESC**, then **G** (generate).
4. The procedure is complete; if you sent the report to the terminal, the screen displays the report, one page at a time. Move through the report using the arrow keys, **ENTER** or **PageUp** and **PageDown** keys.

   When the screen returns to a menu display, you may initiate another function or exit CAS.

Scheduling Reports

CAS Schedule Reports feature is valuable for generating reports or tables that are required periodically. You can define up to 145 report schedules.

To schedule a report:

1. From the CAS main menu, select:

> Reports Menu
>
> > Schedule Reports

```
COMMANDS: Next Previous Update Detail Exit
Update - <ESC> to save, ^C to cancel, <RETURN> for next field
--------------------------------------------------------------------------------
                                SCHEDULE REPORTS
--------------------------------------------------------------------------------

                 Number: 1
            Report Code: ASBS
              Frequency: D
          Next Run Date: 12:00 Aug 15 1994
          Output Method: P
          Output Device: wide 570|lp


Notes:

Frequency is how often a selected report is generated.
<Y>early, <Q>uarterly, <M>onthly, <B>iweekly, <W>eekly,
<D>aily, <H>ourly, <O>nce, <N>ever or a number of days (1 - 99).


Enter Report Code. (^W for Help and then ^C for additional Help.)
```

   The first data entry screen (see sample below) references a report schedule by its Number (1 to 145, not editable).

2. Press **N** (next) or **P** (previous) to move through your list until you reach the schedule of interest — an existing schedule that you wish to change or an undefined schedule that appears with the Report Code field blank.

3. When the screen of interest appears, press **U** (update) and enter values for the fields described below.

   - Report Code. See list below or press **Ctrl-W** with the cursor at that position to select the code from the help window.

     - Report codes for call accounting reports:

ACD	Account Code Detail Report
ACDR	All CDR Analysis Reports
ACR	Abandoned Call Report
ACS	Account Code Summary Report
ASBS	All Summary Reports
BDT	Busy Day Trunk Utilization Report
BHT	Trunk Group Busy Hour Report
CSI	City/State Report for Incoming Calls
CSO	City/State Report for Outgoing Calls
CSS*n*	Cost Center Summary Report (*n*=0 to 9)[1], [2]
CTYP	Call Type Report
DATE	Date Report
DSS*n*	Department Summary Report (*n*=0 to 9)1, 2
DURA	Duration Report
ESS*n*	Extension Summary Report (*n*=0 to 9)
NPAI	Area Code Summary Report For Incoming Calls
NPAO	Area Code Summary Report For Outgoing Calls
ODS*n*	Organization Detail Report (*n*=0 to 9)1, 2
OSS*n*	All Organization Summary Reports (*n*=0 to 9)[3], [4]
SR*n*	Selection Report (*n*= 1 to 25)4
TIME	Time of Day Report
TRNK	Trunk Group Report

     - Report codes for system tables:

ACT	Account Code Table
ADT	All Directory Tables
ALCT	All Costing Tables
AOT	All Organization Tables
AST	All System Tables
CADJ	Cost Adjustments
CARR	Carrier Information
CDRC	CDR Collection Information
COMP	Company Information
CPI	CDR Port Information
CRC	Call Reporting Configuration
DDIR	Department Directory
DDP	Dialed Digit Processing Table

---

1 The n in the report code of an organization report corresponds to the last digit of its report number at the time it was defined. For example, a Cost Center Summary defined as report number 5 corresponds to CSS5.

2 To schedule a Selection or Organization report, make certain to define it first. See Generating Selection Reports or Generating Organization Reports in this chapter.

3 The n in the report code of an organization report corresponds to the last digit of its report number at the time it was defined. For example, a Cost Center Summary defined as report number 5 corresponds to CSS5.

4 To schedule a Selection or Organization report, make certain to define it first. See Generating Selection Reports or Generating Organization Reports in this chapter.

EDIR	Extension Directory
HOLT	Holiday Table
ODIR	Organization Table
ORS	Organization Selection Report Criteria
PDIR	Personnel Directory
SCHR	Report Schedules
SITE	Site Information
SR	Selection Report Criteria
TSC	Telephone System Configuration

- Frequency of the printouts, starting on the Next Run Date: **Y** (yearly), **Q** (quarterly), **M** (monthly), **B** (bi-weekly), **W** (weekly), **D** (daily), **H** (hourly), every 1 to 99 days, or **O** (once).
- Next Run Date. The time — in a 24-hour clock format — and the date of the next printout (at least 5 minutes in the future).
- Output Method and Output Device. Typical values are:
  - To display on the terminal, method **T**. A device is not required.
  - To print, method **P** and device either **wide 570 | lp** (compressed) or **lp** (uncompressed).
  - To save for later viewing (see *Viewing Reports* in chapter 8), use method **R** (redirect) or **A** (append) and device *filename* (where *filename* is up to 10 characters long).

4. When complete, press **ESC**. If scheduling an Abandoned Call Report, a Selection Report, or a system table, proceed directly to step 6.

   For any other call accounting report, press **D** (detail). The second screen appears, similar to the sample below.

5. Press **U** (update) and enter values for the fields below. When complete, press **ESC**.
   - Reporting Period. Enter the letter or number indicator to establish the range of dates of calls reported: **Y** (year), **Q** (quarter), **M** (month), **B** (bi-week), **W** (week), **D** (day), **H** (hour), or 1 to 99 days from the date in the `Start of Period` field, or **A** (all) calls in storage.
   - Start of Period. Enter a date (*mm/dd/yy*) and whether or not to Increment Period: **Y** (yes) adds the number of days in the `Reporting Period` field to the date in `Start of Period` field, so that next run includes only calls from the next period; **N** (no) will include the same calls on the next run.

6. Press **E** (exit). The screen returns to a menu display. You may initiate another function or exit CAS.

NOTE:
If you are scheduling call accounting reports, make certain that:

- the next run date is consistent with the calls you wish to include in the report (see Reporting Period and Start of Period, in the previous paragraph). Other than reports scheduled once, CAS updates the `Next Run Date` field to keep it current.
- the run times are staggered from 10 to 30 minutes apart. Should reports fail to print, try re-scheduling them at times farther apart.

Application Tips

The following pages review some CAS report benefits.

Spotting Telephone Abuse

Excessive personal calls, calls placed by unauthorized personnel (visitors, delivery personnel, janitorial staff), and calls to dial-up recordings are all forms of abuse.

- Check calls to specific telephone numbers in a Selection Report. Examples of possible calling destinations might be:
  - Your competitors (Is someone giving out inside information?)
  - Local media (Who is talking to the press?)
  - Time and weather, dial-a-joke, etc. It was recently reported that a federal government office in Washington, D.C., placed over $25,000.00 per month in calls to two dial-up recordings in New York City. Dial-up recordings in many locations are identified by the 976 exchange.
- Check calls dialed after office hours. You will find the Time of Day Report helpful in determining if this abuse exists. Use the Selection Report to find the details.
- Check incoming WATS in a Call Type Report. Are people giving out 800 numbers to friends? Use the Selection Report to look for a pattern — for example, every Friday noon, extension 315 receives a WATS call and talks for an hour.

Alllocating Costs

Departments, cost centers, and individual company personnel are often accountable for expenses incurred and need to remain within their respective budgets. Some companies operate individual departments on a profit center basis, making expense accountability mandatory.

- The various Organization Summary Reports will provide local managers enough information to keep track of their groups' telephone costs. The Organization Summary Reports, on the other hand, will provide top management a comparative view of the various groups' expenses across all sites.
- To allocate expenses by other than corporate structure level names, certain groups within the company may profit by redefining the Organization Table — for example, using cost centers as a project name to keep track of project costs, or using departments and/or cost centers for the names of managers and project leaders, respectively.

Generating Revenue

Today's technologies allow telephone equipment to be shared by multiple users. This is called reselling and until recently, it was limited to the lodging industry. Hospitals, universities, or complexes with shared facilities (such as condominiums for housing or office space) can be served by a single switch with shared access to WATS lines or other discounted long distance services.

To charge calls placed by patients, students, or tenants (as the case may be), define your departments and cost centers accordingly and use printed copies of the Organization Detail Report as the actual telephone bill for selected departments and/or cost centers.

NOTE:
To charge at a profit, use the *Edit Cost Adjustments* function prior to generating these reports to add any markups and surcharges (see chapter 8, *Costing Configuration*). Remove the markups after generating the reports to produce actual costs on your other reports.

Billing Back Clients

Calls are frequently placed on behalf of clients or particular projects. Professional service departments within an organization must be able to account for their time in order to bill their clients. These calls can result in recovering hundreds of dollars from calls which may otherwise go unbilled.

Obtain detail or summary Account Code reports. Use the printout as the actual bill to your client.

NOTE:
To charge at a profit, use the *Edit Cost Adjustments* screen prior to generating these reports to add any markups and surcharges (see chapter 7, *Managing the Costing Configuration*). Remove the markups after generating the reports to produce actual costs on your other reports.

Measuring Productivity

Telephone intensive organizations such as telemarketing firms, credit collection agencies, your sales department, and other similar environments require intensive use of their phones.

- Use the Organization Summary Report to check calls made by selected extensions. Are your employees making enough calls? Who are they calling?
- Use the Selection Report to check incoming calls received by selected extensions. How busy is your customer service department?
- Use the Selection Report to show incoming calls seeking support of your customer service department. Police, fire departments, security agencies, or any customer service oriented organization may want to compare the time of a complaint, call for service, etc., with the time help was actually dispatched.

Stopping Facilities Misuse

Misuse refers to unknowingly placing calls that incur excess usage charges. They normally occur because of ignorance or misunderstanding on the part of the user, although they may occur because the Automatic Route Selection (ARS) pattern in the switch is set incorrectly.

- Use the Call Type Report to find if there are many calls under the SPCL call type name, then pinpoint details to calls to directory assistance via the Selection Report (even small 50 cent calls can add up to a large bill.)
- Use the Call Type Report to find your long-distance calling patterns. Are you using your WATS for all your long distance calls?

Optimizing Networks

Many long distance service alternatives exist today. WATS, Tie, FX, and T1 lines are a few examples. An optimally designed network for each of your sites will have the proper mix of these services.

- Use your Trunk Group Report to monitor loads. If the load for a trunk within a facility appears too large, coupled with little or no usage on other lines, this might indicate some of the other circuits need servicing. Light usage may also justify deleting some lines.
- Use your Time of Day Report to analyze your busy hour traffic patterns. Then pinpoint facility usage for those hours with a Selection Report. Busy lines at peak hours require rerouting to more expensive lines — perhaps changing calling patterns to a different time of day will solve network delays. Heavy usage may also justify adding some lines.

Configuring the Site

4

This chapter describes the functions used to keep the site, telephone system, and account code tables up-to-date. It is organized into sections following the order of the Site Configuration Menu.

- *Editing the Site Information* — describes how to look up the site name, address, phone number, and miscellaneous ordering information.
- *Editing the Telephone System Configuration* — describes how to edit trunking information.
- *Editing the Account Code Table* — describes how to edit the account code numbers and names.
- *Changing Account Codes in Call Records* — describes how to change the account numbers in stored call records.
- *Installing a Site* — describes how to load the rate tables and set up a basic configuration after installing CAS.
- *Listing Site Tables* — describes how to generate a listing of any table from the Site Configuration Menu.

Editing the Site Information

Use this function to look up or change the site name, address, and the name and phone number of the CAS administrator at the site.

Procedure

1. From the CAS main menu, select the following sequence.

> Site Configuration Menu
>
> > Edit Site Information

A screen similar to the sample below appears.

```
COMMANDS: Query Next Previous Update Exit
          Find next record
--------------------------------------------------------------------------------
                              EDIT SITE INFORMATION
--------------------------------------------------------------------------------

             Site Name: LAB MT 2E-524
           Site Number: 1
        Site Area Code: 908
         Site Exchange: 957
          Site Address: 200 laurel
             Site City: middletown
            Site State: nj
         Site Zip Code: 07748
   Site Contact Person: kas
   Site Contact Number: 1066

                              Date          Order Number
                         ----------------   ------------
          Installation: 13:36 Aug 11 1994   M48020-002
           Last Update: 13:36 Aug 11 1994   NEVER


At end of list
```

2. To make any changes, press **U** (update), edit the fields of interest, and press **ESC**.
3. Press **E** (exit). The procedure is complete; the screen returns to a menu display. You may initiate another function or exit CAS.

Field Description

The following list describes all fields in this function.

- Site Name. The name (1 to 15 characters) associated with this site. A CAS site, typically a building serviced by a single switch, is the CAS organizational entity that is the source of call records.
- Site Number. (Not editable) This field always shows the number **1**.

- Area Code and Exchange. (Not editable, used for informational purposes) When custom rates are installed for this site, this field shows the actual local calling area code. Otherwise, this field contains dummy numbers.
- Site Address (40 characters), City (30 characters), State (2 characters), Zip Code (5 or 11 characters), Contact Person (40 characters), and Number (10 characters).
- Installation and Last Update. (Not editable) The time, date, and ordering information of the initial site installation or the installation of its most recent rate update.

Editing the Telephone System Configuration

Use this function to identify how the switch at the site reports the telephone facilities used and how calls using those facilities should be costed.

CAS structures the Telephone System Configuration as a hierarchy of facilities, dial access codes, and trunk/lines — following a typical way of programming trunk access at the switch.

Namely, in most installations you access a telephone facility — CO, WATS, Foreign Exchange (FX), tie line, etc. — by dialing one (of possibly, several) access codes or buttons, each associated with a billing scheme and with one or more trunks. Switches programmed for automatic route selection (ARS) choose the telephone facility for you, based on availability, cost, and type of call dialed. Regardless of the programming, your switch reports the line actually used.

NOTE:
If necessary, use the Intuity Maintenance Module's switch administration application to display facility, access code, and trunk assignments for your switch.

The following diagram shows a sample site's grouping of trunk information.

Trunk Group	Facility Name	Dial Access Code	Billing Scheme	Trunk/Line
1	CO	9	by tariff	801, 802, 803, 804, 805, 806
2	WATS4	890	6¢ /minute	811, 812
3	FX-NY	| 891	13¢ /minute	815

Procedure

1. From the CAS main menu, select the following sequence.

> Site Configuration Menu
>
> > Edit Telephone System Configuration

A screen similar to the one below appears on display.

```
COMMANDS: Query Next Previous Detail Exit
          Query for record
--------------------------------------------------------------------------------
                  EDIT TELEPHONE SYSTEM CONFIGURATION - SITE
--------------------------------------------------------------------------------

                  Site: LAB MT 2E-524
```

2. Press **D** (detail).

   The next three fields appear on display, as in the sample below.

```
COMMANDS: Query Next Previous Add Update Remove Master Detail Exit
          Find next record
--------------------------------------------------------------------------------
                EDIT TELEPHONE SYSTEM CONFIGURATION - TRUNK GROUP
--------------------------------------------------------------------------------

                  Site: LAB MT 2E-524
           Trunk Group: 1
              Facility: CO
     Number of Trunks:    5
```

   a. To create a new facility record, press **A** (add). The three fields at the bottom will be blanked. Enter values for these fields as described in the *Field Description* section and press **ESC**. Proceed directly to step 5.

   b. To change or remove an existing record and/or its details, press **N** (next) or **P** (previous) to bring the facility name of interest to the screen.
   To change any values, press **U** (update), enter the changes, and press **ESC**.

   c. To remove the facility on display, make certain its details are removed first, then press **R** (remove) and follow screen instructions.

3. To add, change, or remove facility details, press **D** (detail).

The next five fields appear on display, as in the following sample.

```
COMMANDS: Next Previous Add Update Remove Master Detail Exit
          Find Detail record
--------------------------------------------------------------------------------
            EDIT TELEPHONE SYSTEM CONFIGURATION - DIAL ACCESS CODE
--------------------------------------------------------------------------------

                   Site: LAB MT 2E-524
            Trunk Group: 1
               Facility: CO
      Number of Trunks:    5
      Dial Access Code: 9
       Rate (in cents):    -1
             Rate Type: M
               Carrier: 0
        Incoming Calls: N
```

a. To create a new dial access code record, press **A** (add). The five fields at the bottom will be blanked. Enter values for these fields as described in the *Field Description* section and press **ESC**. Proceed directly to step 7.

b. To change or remove an existing record and/or its details, press **N** (next) or **P** (previous) to bring the dial access code of interest to the screen.
   To change any values, press **U** (update), enter the changes, and press **ESC**.

c. To remove the dial access code on display, make certain its details are removed first, then press **R** (remove) and follow screen instructions.

4. To return to the facility level, press **M** (master) and proceed to step 3a or 3b; to add, change, or remove dial access code details, press **D** (detail).

   The last field, `Trunk Line`, is added at the bottom of the display.

```
COMMANDS: Query Next Previous Add Update Remove Master Exit
          Query for record
--------------------------------------------------------------------------------
              EDIT TELEPHONE SYSTEM CONFIGURATION - TRUNK LINE
--------------------------------------------------------------------------------

                   Site: LAB MT 2E-524
            Trunk Group: 1
               Facility: CO
      Number of Trunks:    5
      Dial Access Code: 9
       Rate (in cents):    -1
             Rate Type: M
               Carrier: 0
        Incoming Calls: N
            Trunk Line: 801
```

a. To create a new record, press **A** (add), enter a new trunk/line (see field description), and press **ESC**. Proceed directly to step 9.

b. an existing trunk/line, press **N** (next) or **P** (previous) to bring it to the screen.

c. change a trunk/line, press **U** (update), enter the change, and press **ESC**.

d. To remove a trunk/line, press **R** (remove) and follow screen instructions.

5. To return to the dial access code level, press **M**aster and proceed to step 3a or 3b.

6. To end the procedure, press **E** (exit).

   The screen returns to a menu display. You may initiate another function or exit CAS.

Field Description

The following list describes all fields in this function.

- Site. (Not editable) The name of your site, from the Edit Site Information screen.
- Trunk Group. An arbitrary number from 0 to 9998 assigned by you to identify a group of lines providing the same telephone service.

  NOTE:
  The trunk group 9999 is reserved for internal use.

- Facility. The name, 1 to 5 characters long, assigned by you to a type of telephone service available on site. Facilities that do not use tariff costing are reported as call types. We suggest entering descriptive names (for example, **FX-LA** and **FX-NY** to distinguish an FX line to Los Angeles from another to New York).

  NOTE:
  The call type of tariffed facilities is derived internally from the dialed number and may not be used as facility names. These are LOCAL, LATA, IS-IL, IS-OL, OS-IL, OS-OL, IDDD, SPCL, and ZERO+.

- CAS includes the following facility naming conventions:
  - CO. Central Office — regular services provided by your local and long distance carriers.
  - IWTS*n*. Inbound, band *n* (*n* = 0 to 6) WATS, billed by usage.
  - WATS*n*. Outbound (or both inbound and outbound), band *n* (*n* = 0 to 9) WATS, billed by usage.
- Number of Trunks. The number, from 0 to 999, of lines in this group (optional, used for information only).

- Dial Access Code. The number, from 0 to 99999, used to identify a billing scheme for a particular facility. Typically, this is the one- to three-digit code that you dial to place an outside call via a trunk in this group.
- Rate. The costing associated with a facility: enter **-1** for tariff table costing and zero-based rating; for all others, enter a flat rate, 0 to 32000 cents, according to the rate type (see below). We suggest you average the rates for this facility using actual telephone bills over two or three billing periods.
- Rate Type. The costing associated with the flat rate specified above — enter either **C** (per call) or **M** (per minute).
- Carrier. The numbers 0 or 1. Enter **1** for any group of lines dedicated to a secondary carrier service, enter **0** for all others.
- Incoming Calls. The disposition of any incoming calls routed through these lines: enter **D** (discard), **N** (accept at no cost),or **C** (cost at the flat rate specified above).
- Trunk Line. The identifier reported by the switch for the route of a call — switches use different terms for this identifier. For example, a MERLIN LEGEND switch reports a "line" number; a DEFINITY G3 reports the "trunk access code used".
- Calls reported by the switch as using trunks not defined in this table will be costed at CO rates and the trunk shown in reports as ?????.

Editing the Account Code Table

Use this function to support the account code feature of your switch.

When the feature is used — usually by dialing the code number for a client account before starting the call — the switch adds the account identifier to that call record. Account codes appearing in call records are checked against the system internal list. If the account code is not listed, it will be added automatically to the account named **UNASSIGNED**.

Procedure

1. From the CAS main menu, select the following sequence.

> Site Configuration Menu
>
> > Edit Account Code Table

2. Press **D** (detail).

   CAS accesses the Account Code Table and displays the first record on the screen, as in the sample below.

```
COMMANDS: Query Next Previous Add Update Remove Master Exit
Add - <ESC> to save, ^C to cancel, <RETURN> for next field
-------------------------------------------------------------------------------
                              EDIT ACCOUNT CODE TABLE
-------------------------------------------------------------------------------

                   Site: LAB MT 2E-524
           Account Code: 10
           Account Name: LELE,RAM, & YU
```

3. To enter a new account, press **A** (add) and enter field information as described at the end of this section. When complete, press **ESC**.
4. To remove or update an account, bring the account code of interest to the screen with a **Q** (query), **N** (next), or **P** (previous) command.
5. Depending on the operation, press **R** (remove) and follow the screen instructions or press **U** (update), edit field information, and press **ESC**.
6. When complete, press **E** (exit).

   The screen returns to a menu display. You may initiate another function or exit CAS.

Field Description

The following list describes the fields in this function.

- Site. (Not editable) The name of your site, from the Edit Site Information screen.
- Account Code. One to 15 numeric characters corresponding to the client account, etc., as programmed for the switch.
- Account Name. One to 20 alphanumeric characters corresponding to the name associated with the client account or project code.

Changing Account Codes in Call Records

Use this function to change the account code numbers in the stored call records themselves.

To illustrate this procedure, we shall use the following example: change a call incorrectly charged to account 06 to account code 10.

1. From the CAS main menu, select the following sequence.

> Site Configuration Menu

> Change Account Code in Call Record

A screen similar to the one below appears.

```
COMMANDS: Query Next Previous Detail Exit
          Query for record
--------------------------------------------------------------------------------
                    CHANGE ACCOUNT CODE IN CALL RECORD - SITE
--------------------------------------------------------------------------------

                          Site: LAB MT 2E-524
```

2. Select the destination account code:

   a. Press **D** (detail), **Q** (query), enter the new account code (in our example, **10**), and press **ESC**.

   The screen displays:

```
COMMANDS: Query Next Previous Choose Master Detail Exit
          Find next record
--------------------------------------------------------------------------------
                        CHANGE ACCOUNT CODE IN CALL RECORD
--------------------------------------------------------------------------------

                          Site: LAB MT 2E-524
                  Account Code: 10
                  Account Name: LELE, RAM, & YU
```

   b. Press **C** (choose).

   The screen displays:

```
COMMANDS: Query Next Previous Choose Master Detail Exit
          Select the Destination
--------------------------------------------------------------------------------
                        CHANGE ACCOUNT CODE IN CALL RECORD
--------------------------------------------------------------------------------

                          Site: LAB MT 2E-524
                  Account Code: 10
                  Account Name: LELE, RAM, & YU



  destination account code:     10
  Destination Account Name:     LELE, RAM, & YU
```

3. Find the call record(s) with the old account code:

   a. Press **Q** (query), enter the old account code (in our example, **6**), and press **ESC**.

The screen displays:

```
COMMANDS: Query Next Previous Choose Master Detail Exit
          Query for record
--------------------------------------------------------------------------------
                      CHANGE ACCOUNT CODE IN CALL RECORD
--------------------------------------------------------------------------------

                           Site: LAB MT 2E-524
                   Account Code: 06
                   Account Name:



  destination account code:     10
  Destination Account Name:     LELE, RAM, & YU
```

b. Press **D** (detail).

CAS retrieves all call records with this account code and displays the first record on the screen.

```
COMMANDS: Next Previous Transfer Master Exit
          Find next record
--------------------------------------------------------------------------------
            CHANGE ACCOUNT CODE IN CALL RECORD - UPDATE CALL RECORD
--------------------------------------------------------------------------------

                           Site: LAB MT 2E-524
                   Account Code: 06
                   Account Name:
        Call Record Start Date: Aug 12 1994
        Call Record Start Time: 08:06
         Call Record Extension:   303
     Call Record Dialed Digits: 212-957-1835
      Call Record Account Code: 06

  destination account code:     10
  Destination Account Name:     LELE, RAM, & YU
```

4. To effect the changes, press **T** (transfer), **ESC** , and **ENTER**.
5. The transfer is complete. Press **E** (exit).

   The screen returns to a menu display. You may initiate another function or exit CAS.

Installing a Site

Use this function at installation to load the zero-based rating or System Update-Rates disk and set up a basic configuration.

For details on this, and related site installation procedures see *Installing Rate Tables and Setting Up a Site* in appendix B.

Listing Site Tables

Use this menu to generate any of the following tables:

- Site Information
- Telephone System Configuration
- Account Code Table

Figure 4-1 shows sample tables.

1. From the CAS main menu, select the following sequence.

> Site Configuration Menu
>
> > Site Tables Menu
> >
> > > *any database table*

A screen similar to the one that follows displays.

```
COMMANDS: Update Generate Exit
          Update the displayed record
--------------------------------------------------------------------------------
                                SITE INFORMATION
--------------------------------------------------------------------------------
         Output Method: P
         Output Device: wide 570 | lp
```

2. To change values, press **U** (update), enter the *Output Method* and *Device*, and press **ESC**. Typical values are:

   a. To display on the terminal, enter method **T**. A device is not required.

   b. To print, enter method **P**, then device **wide 570 | lp** (compressed) or **lp** (uncompressed).

   c. To save for later viewing (see *Viewing Reports* in chapter 8), use method **R** (redirect) or **A** (append) and device *filename* (where *filename* is up to 10 characters long).

3. Press **G** (generate). If you sent the report to the terminal, the screen displays it, one page at a time. Paginate using the arrow keys, **ENTER**, or **PAGEUP** and **PAGEDOWN** keys.

   The procedure is complete. The screen returns to a menu display; you may initiate another function or exit CAS.

```
06:38 PM                    Site Information                    Page      1
                            Intuity CAS IP8                     Aug 13 1994
                             LAB MT 2E-524
--------------------------------------------------------------------------
Name..........
Area Code.....
Exchange......
Address.......

Contact.......
Installation...
Last Update....
End of Site Inf
(EOF)Press <RET
```

```
06:53 PM                Telephone System Configuration              Page      1
                              Intuity CAS IP8                       Aug 13 1994
                               LAB MT 2E-524
--------------------------------------------------------------------------
Trunk            Trunk   Access            Rate            Cost
Group   Facility Count    Code    Rate      Type   Carrier  Incoming   Trunk
____    ________ _____   ______  ______    ______ _______  ________   ______
????    CO       1       NONE      $.00    Tariff ATT (0)  No Cost    ???????
1       CO       5       9         $.00    Tariff ATT (0)  No Cost    801
1       CO       5       9         $.00    Tariff ATT (0)  No Cost    802
1       CO       5
1       CO       5
1       CO       5
2       CO       7
2       CO       7
2       CO       7
2       CO       7
2       CO       7
2       CO       7
End of Telephone Syste
```

```
07:25 PM                    Account Code Table                  Page      1
                             Intuity CAS IP8                    Aug 13 1994
                              LAB MT 2E-524
--------------------------------------------------------------------------
                    Account Code        Account Name
                    ____________        ____________
                                        UNASSIGNED
                    01                  HEYL & ROBINSON, INC
                    02                  STICKLER & SONS
                    03                  BO ENTERPRISES
                    04                  NOVA TELECOM
                    05                  SMITH'S DONUTS
                    06                  FRISSORA ELECTRONICS
                    10                  LELE, RAM, & YU
                    99999903
                    99999906
End of Account Code Table...
```

Figure 4-1. Sample Site Tables

Configuring the Organization

5

This chapter describes the functions to look up, list, change, or create entries in your company organization table. It is organized into sections following the order of the Organization Configuration Menu.

- *Editing the Company Information* — describes how to change the name of the company for report headers.
- *Editing the Organization Table* — describes how to edit entries in any hierarchical level of the company organization table.
- *Loading the Organization Table* — describes how to transfer a specially formatted text file of the organization table into the CAS organization database.
- *Moving Entries in the Organization Table*— describes how to reassign personnel, extensions, or cost centers to a different extension, cost center, or department (respectively).
- *Listing the Directory and Organization Tables* — describes how to generate any table listing from the Organization Configuration menu.

Editing Company Information

Use this function to change the company name in the report headers.

Procedure

1. From the CAS main menu, select the following sequence.

> System Configuration Menu
>
> > Edit Company Information

A screen similar to the sample below appears.

```
COMMANDS: Update Exit
Update - <ESC> to save, ^C to cancel
--------------------------------------------------------------------------------
                          EDIT COMPANY INFORMATION
--------------------------------------------------------------------------------

          Company Name: ACME HARDWARE

Notes:

The Company Name appears in report headings exactly as entered here.
```

2. To make any changes, press **U** (update), type over the name, and press **ESC**.
3. Press **E** (exit). The screen returns to a menu display; you may initiate another function or exit CAS.

Field Information

Company Name. The name (1 to 20 alphanumeric characters) of the company that appears on all report headers.

Editing the Organization Table

Use this function to add, remove, or change department names, cost centers, extensions and their users' telephone charge information. Reports reflect current entries.

CAS structures a site into departments — and these, into cost centers — to allocate telephone expenses for calls charged to any extension. Personnel entries for extension users provide a useful directory. In addition, if your switch is programmed for authorization codes, CAS supports charging a call to the extension "owning" an authorization code, regardless of origin.

Figure 5-1 illustrates the hierarchical nature of an organization table.

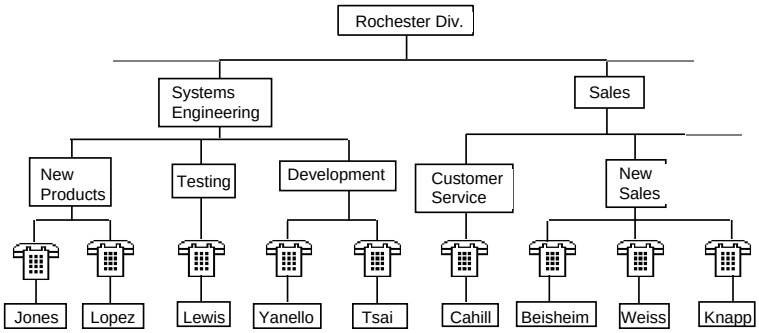

Figure 5-1. Sample of a Site Organization

NOTE:
To reassign entire branches of the organization — for example, to move an entire cost center to another department, or an extension and its users to another cost center, use the functions documented under *Move Organization Table Entries* in this chapter.

Procedure

1. From the CAS main menu, select the following sequence.

> System Configuration Menu
> > Edit Organization Table

A screen similar to the one below appears on display.

```
COMMANDS: Query Next Previous Detail Exit
          Query for record
-------------------------------------------------------------------------------
                        EDIT ORGANIZATION TABLE - SITE
-------------------------------------------------------------------------------

                        Site: LAB MT 2E-524
```

2. Press **D** (detail) .

   The Department field appears on display.

```
COMMANDS: Query Next Previous Add Update Remove Master Detail Exit
          Find next record
--------------------------------------------------------------------------------
                    EDIT ORGANIZATION TABLE - DEPARTMENT
--------------------------------------------------------------------------------

                       Site: LAB MT 2E-524
                 Department: DEPARTMENT 1
```

   a. To create a new department, press **A** (add), enter its name as described in *Field Information*, and press **ESC**. Proceed directly to step 3.

   b. To change or remove an existing organization record and/or its details, press **N** (next) or **P** (previous) to bring the department of interest to the screen.

   c. To change the department on display, press **U** (update), enter the new name, and press **ESC**.

   d. To remove the department on display, make certain its details are removed first, then press **R** (remove) and follow screen instructions.

3. To add, change, or remove department details, press **D** (detail).

   The Cost Center field appears on display.

```
COMMANDS: Query Next Previous Add Update Remove Master Detail Exit
          Find Detail record
--------------------------------------------------------------------------------
                    EDIT ORGANIZATION TABLE - COST CENTER
--------------------------------------------------------------------------------

                       Site: LAB MT 2E-524
                 Department: DEPARTMENT 1
                Cost Center: COSTCENTER 1
```

   a. To create a new cost center, press **A** (add), enter its name as described in *Field Information*, and press **ESC**. Proceed to step 4.

   b. To change or remove an existing organization record and/or its details, press **N** (next) or **P** (previous) to bring the cost center of interest to the screen.

   c. To change the cost center on display, press **U** (update), enter the new name, and press **ESC**.

d. To remove the cost center on display, make certain its details are removed first, then press **R** (remove) and follow screen instructions.

4. To return to the department level, press **M** (master) ; to add, change, or remove cost center details, press **D** (detail).

   The Extension field appears on display.

```
COMMANDS: Query Next Previous Add Remove Master Detail Exit
          Find Detail record
-------------------------------------------------------------------------------
                      EDIT ORGANIZATION TABLE - EXTENSION
-------------------------------------------------------------------------------

                      Site: LAB MT 2E-524
                Department: DEPARTMENT 1
               Cost Center: COSTCENTER 1
                 Extension: 1101
```

   a. To create a new extension, press **A** (add), enter its number, and press **ESC**. Proceed directly to step 5.

   b. To change or remove an existing organization record and/or its details, press **N** (next) or **P** (previous) to bring the extension of interest to the screen.

   c. Change the extension on display, press **U** (update), enter the changes, and press **ESC**.

   d. Remove the extension on display, make certain its details are removed first, then press **R** (remove) and follow screen instructions.

5. To return to the cost center level, press **M** (master); to add, change, or remove extension details, press **D** (detail).

   The personnel record appears on display.

```
COMMANDS: Query Next Previous Add Update Remove Master Exit
          Find next record
-------------------------------------------------------------------------------
                      EDIT ORGANIZATION TABLE - PERSONNEL
-------------------------------------------------------------------------------

                      Site: LAB MT 2E-524
                Department: DEPARTMENT 1
               Cost Center: COSTCENTER 1
                 Extension: 1101
                      Name: JIM THOMAS
        Authorization Code:
        Credit Card Number:
                   Carrier:
```

   a. To create a new record, press **A** (add) and enter the extension user's name. If your switch is programmed for authorization codes, you may enter the user's code to charge calls to his or her extension (this application does not use the credit card number and carrier fields). When complete, press **ESC**.

Repeat this step, if this extension has more users; otherwise, proceed to step 6.

b. To change or remove an existing record and/or its details, press **N** (next) or **P** (previous) to bring the name of interest to the screen.

c. To change any values on display, press **U** (update), enter the changes, and press **ESC**.

d. To remove the record on display, press **R** (remove) and follow screen instructions.

6. To return to the extension level, press **M** (master).
7. To end the procedure, press **E** (exit). The screen returns to a menu display; you may initiate another function or exit CAS.

Field Information

The list that follows describes field entries. Some fields do not allow entries or are not required for this product.

- Site. (Not editable) The name of your site, from the Edit Site Information screen.
- Department and Cost Center. The names (1 to 15 alphanumeric characters) of the master and detail levels (respectively) under which extensions are placed. You may duplicate a cost center name under a different department.
- To speed the sorting process in reports, we recommend single word names (using such separators as **-** or _ if necessary, for example, **NEW_SALES**).
- CAS includes default entries, the **UNATTACHED** department and cost center, used to capture information on undefined extensions appearing in call records (see *Extension* in this list). CAS does not allow changing these entries.
- Extension. The station number (1 to 5 digits) as it appears in the call record from the switch. Extension numbers are unique. CAS will not allow the same extension under another cost center/department.
- Unidentified extensions will be added to the table under the **UNATTACHED** department and cost center. To assign unattached extensions to the proper department and cost center, see *Moving Entries in the Organization Table* documented in this chapter.
- Name. The name of an extension user (1 to 39 alphanumeric characters). To print a directory in alphabetical order, we recommend entering the last name first — for example**, SMITH, MARY**.

- An extension may have more than one user; however, only the first entry appears on reports. Extensions without users will be listed as **UNASSIGNED**.
- Authorization Code, Credit Card Number, and Carrier. Not used.

Loading the Organization Table

Use this function to reproduce the site organization table from a previously prepared ASCII file that contains the table entries. Use this procedure at installation instead of creating the table via the Edit Organization Table function.

Loading the organization table is a data transfer process that assumes the existence of a previously prepared text file containing the table entries.

This section describes the format of the data file as well as the procedure to verify that the transfer was successful. Creating the file, however, requires access to UNIX commands (generally within the purview of technicians only) and is beyond the scope of this manual.

Data File Format

The file used by the Load Organization Table is an ASCII file, prepared using a UNIX text editor such as vi. A file prepared using any other tool must be carefully checked to conform to CAS's requirements.

Consult your UNIX manuals to create this file. Note the path-name (1 to 45 characters long) where it resides to enter it in step 2 of *Loading the Data File*, documented in the next section.

- Each line is a company organization record, terminated in a UNIX <newline> character (implicitly set when you hit the Ý àEàNàTàEÞR key during insert mode in vi).
- The record contains four (4) required fields, one (1) optional and three (3) empty fields. Fields are delimited by a pipe symbol (|), without spaces before or after it, entered in the following order:
- *site* | *department* | *cost center* | *extension* | *name* | | | |
- The list that follows describes valid field entries:
  - Site. The site name (1 to 15 characters) as it appears in the Edit Site Information screen. Required field.
  - Department and Cost Center. The names (1 to 15 characters) of the organizational divisions under which extensions are placed. Cost centers may be duplicated under different departments. Required fields.

- Extension. The station number (1 to 4 numeric characters) as it appears in the call record from the switch. Extensions must be unique — that is, the same extension may not be repeated under another cost center and/or department. Required field.
- Name. The name (1 to 39 characters) of an extension user. Exten-sions may have multiple users. Optional field.

- Whenever optional entries are left out, empty fields must be indicated by consecutive pipes (|). For example:

  ROCHESTER|SYS-ENGINEERING|R&D|365|||||

- When the load executes, fields that overflow their size truncate to their maximum allowable size and character fields convert to upper case. These "corrections" do not appear as errors.

  NOTE:
  The following errors result in an aborted operation (the error message and a copy of the offending record are logged):

  - Unknown site name
  - Records with less than eight (8) pipe (|) symbols
  - Required field missing
  - Non-numeric extension number

  The following are non-fatal errors — the offending record will be discarded without aborting the operation, an error message and a copy of the offending record will be logged:

  - Duplicate record
  - Extension linked to a second cost center or department

Loading the Data File

1. From the CAS main menu, select the following sequence.

> Organization Configuration Menu
>
> > Load OrganizationTable

A screen similar to the sample below appears.

```
COMMANDS: Update Load Exit
          Update the displayed record
-------------------------------------------------------------------------------
                              LOAD ORGANIZATION TABLE
-------------------------------------------------------------------------------


     Data File: /usr/spool/uucppublic/datafile
```

2. Press **U** (update), enter the full path-name to the file, and press **ESC**.
3. Press **L** (load). When the screen informs you that the load is complete, press **E** (exit) and return to CAS main menu.

Verifying the Operation

1. From the CAS main menu, select the following sequence.

> System Configuration Menu
>
> > View Logs

A screen similar to the sample below appears on display.

```
-------------------------------------------------------------------------------
                                     VIEW LOGS
-------------------------------------------------------------------------------
  1 SMDR_1                10 install/site081194   18 options
  2 chkctrl.log           11 install/site081394   19 poller
  3 chkfe.log             12 install/software     20 reports
  4 chkpc.log             13 install/upd081194    21 reports.1
  5 dbwork                14 install/va081194     22 reports.2
  6 frontend              15 killfelog            23 loadorg072694
  7 install/ht081194      16 monitor               P Print a log
  8 install/pbx081194     17 monitor.log           D Delete a log
  9 install/setup081194                            E Previous Menu

Your View choice: _
```

2. Find `loadorg`*mmddyy* — where *mmddyy* is today's date — and enter its list number (for example, **23** above).

   A screen similar to the sample below appears on display.

```
Load started at   18:29:25 on 07/26/94
Checking Data File "usr/uucp/public"
    130 Records Received From File "usr/uucp/public"
Loaded Departments
Loaded Cost Centers
Loaded Extensions
Loaded Personnel
Finished
Load ended at 18:31:01 on 07/26/94

(EOF) (loadorg072694) <RETURN> to continue, <Q> to quit
```

NOTE:
If there were fatal errors, a message that the operation was aborted appears along with the cause; otherwise, status messages inform you of the number of records received and the number and list of records rejected (if any).

A fatal error requires correcting the data file before repeating this operation; discarded records may be added to the (partially) loaded database via the Edit Organization Table function.

3. To end the viewing session, press **ENTER** and then **E** (exit). The prior menu appears.

Moving Entries in the Organization Table

CAS provides three functions used to reassign any company subdivision, Cost Center, Extension, or Personnel, including its lower branches, to a different part of the organization tree. These functions are:

- Move Cost Centers Between Departments
- Move Extensions Between Cost Centers
- Move Personnel Between Extensions

Procedure

We shall use an example to illustrate this procedure: move extension 101 from the UNATTACHED department and cost center to Cost Center1 of Department1.

1. From CAS main menu select the following sequence.

> Organization Configuration Menu

> Move Extensions Between Cost Centers

A screen similar to the one below appears.

```
COMMANDS: Query Next Previous Detail Exit
          Query for record
-------------------------------------------------------------------------------
                    MOVE EXTENSIONS BETWEEN COST CENTERS - SITE
-------------------------------------------------------------------------------

                           Site: LAB MT 2E-524
```

2. Select the destination department and cost center.

   a. Press **D** (detail), then **N** (next) until the destination department (DEPARTMENT1) appears on display.

```
COMMANDS: Query Next Previous Master Detail Exit
          Find next record
-------------------------------------------------------------------------------
                MOVE EXTENSIONS BETWEEN COST CENTERS - DEPARTMENT
-------------------------------------------------------------------------------

                           Site: LAB MT 2E-524
                     Department: DEPARTMENT 1
```

   b. Press **D** (detail), then **N** (next) until the destination cost center (CostCenter1) appears on display.

```
COMMANDS: Query Next Previous Choose Master Detail Exit
          Find Detail record
-------------------------------------------------------------------------------
                MOVE EXTENSIONS BETWEEN COST CENTERS - COST CENTER
-------------------------------------------------------------------------------

                           Site: LAB MT 2E-524
                     Department: DEPARTMENT 1
                    Cost Center: COSTCENTER 1
```

   c. Press **C** (choose). The screen displays:

```
COMMANDS: Query Next Previous Choose Master Detail Exit
          Find Detail record
-------------------------------------------------------------------------------
                MOVE EXTENSIONS BETWEEN COST CENTERS - COST CENTER
-------------------------------------------------------------------------------

                           Site: LAB MT 2E-524
                     Department: UNATTACHED
                    Cost Center: UNATTACHED

  destination department: DEPARTMENT 1
    destination cost center: COSTCENTER 1
```

3. Find the extension in the original department and cost center (UNATTACHED) and transfer it to its final destination.

   a. Press **N** (next) or **P** (previous) until the original department (UNATTACHED) appears on display.

   b. Press **D** (detail), then **N** (next) or **P** (previous) until the original cost center (UNATTACHED) appears on display.

```
COMMANDS: Query Next Previous Choose Master Detail Exit
          Find Detail record
-----------------------------------------------------------------------------
              MOVE EXTENSIONS BETWEEN COST CENTERS - COST CENTER
-----------------------------------------------------------------------------

                         Site: LAB MT 2E-524
                   Department: UNATTACHED
                  Cost Center: UNATTACHED


  destination department: DEPARTMENT 1
    destination cost center: COSTCENTER 1
```

   c. Press **D** (detail), then **Q** (query). Enter the extension of interest (**100**) and press **ESC**.

```
COMMANDS: Query Next Previous Transfer Master Exit
          Find next record
-----------------------------------------------------------------------------
                      MOVE EXTENSIONS BETWEEN COST CENTERS
-----------------------------------------------------------------------------

                         Site: LAB MT 2E-524
                   Department: UNATTACHED
                  Cost Center: UNATTACHED
                    Extension:  101

  destination department: DEPARTMENT 1
    destination cost center: COSTCENTER 1


Notes:

Specifying/Transferring the Extension:

Press <T>ransfer to move the indicated extension,
or use <N>ext or <P>revious to select another.
```

4. Finally, press **T** (transfer), **ESC**, and **ENTER**.

5. The transfer is complete. Press **E** (exit).

   The screen returns to a menu display; you may initiate another function or exit CAS.

Listing the Directory and Organization Tables

Use these options to generate listings of your company organization table:

- The Directory Table menu provides the following options:

- List Departments generates a nested list of user names grouped by extensions, within cost centers, within departments.
- List Extensions generates a flat list of extensions, departments, cost centers, and user names sorted in ascending order by extension.
- List Personnel generates a flat list of users, extensions, departments, and cost centers, sorted alphabetically by user names.

- The Organization Table menu provides a printout of the Company Information and the Organization Table (see figure 5-2).

```
                                Organization Table                    Page      1
10:05 PM                         Intuity CAS IP8                      Aug 13 1994
                                  LAB MT 2E-524
--------------------------------------------------------------------------------
  Department      Cost Center    Ext                  Person
_______________ _______________ _____ ______________________________________________
DEPARTMEMT 2    COSTCENTER 5    2201   JOHN BATES
DEPARTMEMT 2    COSTCENTER 5    2202   RALPH DENZER
DEPARTMENT 1    COSTCENTER 1    101    HAROLD LANE
DEPARTMENT 1    COSTCENTER 1    1001   BARBARA SUTTON
DEPARTMENT 1    COSTCENTER 1    1101   JIM THOMAS
DEPARTMENT 1    COSTCENTER 1    1102   LIZ NELSON
DEPARTMENT 1    COSTCENTER 2    1201   ART MEAD
DEPARTMENT 1    COSTCENTER 3    1002   RITA LANESS
DEPARTMENT 1    COSTCENTER 3    1301   NANCY HART
DEPARTMENT 1    COSTCENTER 3    1302   SHEILA MAJORS
DEPARTMENT 1    COSTCENTER 3    1303   TOM GRANTLY
DEPARTMENT 1    COSTCENTER 3    1304   BILL BARTLETT
DEPARTMENT 1    COSTCENTER 4    2101   RICK VERLAINE
DEPARTMENT 1    COSTCENTER 4    2102   TIM DONNELLY
DEPARTMENT 1    COSTCENTER 4    2103   JERRY VINCENT
```

Figure 5-2. Sample Organization Table Listing

To list a Directory or an Organization table, proceed as follows:

1. From the CAS main menu, select the following sequence.

> Organization Configuration Menu
>
> > Directory Tables Menu
> >
> > > *any database table*

A screen similar to the one below appears on display.

```
COMMANDS: Update Generate Exit
          Update the displayed record
--------------------------------------------------------------------------------
                              ORGANIZATION TABLE
--------------------------------------------------------------------------------
        Output Method: I
        Output Device: Your Terminal
```

2. To change values, press **U** (update),complete the Output Method and Device fields, and press **ESC**. Typical values are:

   a. To display on the terminal, enter method **T**. A device is not required.

   b. To print, enter method **P**, then device **wide 570 | lp** (compressed) or **lp** (uncompressed).

   c. To save for later viewing (see *Viewing Reports* in chapter 8), use method **R** (redirect) or **A** (append) and device *filename* (where *filename* is up to 10 characters long).

3. Press **G** (generate. If you sent the report to the terminal, the screen displays it, one page at a time. Paginate using the arrow keys, **ENTER** or **PageUp** and **PageDown** keys.

   The procedure is complete. The screen returns to a menu display; you may initiate another function or exit CAS.

Managing the CDR Collection Configuration

6

This chapter describes the functions used in controlling and interpreting the flow of call record data, also known as Call Detail Recording (CDR), from your switch. The chapter is organized into sections following the order they appear on the CDR Collection Configuration menu.

- *Editing CDR Collection Information* — describes how to identify how call record data is collected from the switch.
- *Editing CDR Port Information* — describes how to identify the port used for call record collection.
- *Listing the CDR Configuration Tables* — describes how to generate the CDR collection and port information tables.

Editing CDR Collection Information

Use this function to view or update control information for data transmissions from the switch.

Procedure

1. From the CAS main menu select the following sequence.

> CDR Collection Configuration Menu
>
> > Edit CDR Collection Information

A screen similar to the one below appears.

```
COMMANDS: Query Next Previous Detail Exit
          Query for record
-------------------------------------------------------------------------------
                    EDIT CDR COLLECTION INFORMATION - SITE
-------------------------------------------------------------------------------

                         Site: LAB MT 2E-524

Notes:

Select a Site.

Press <D>etail to edit CDR Collection and Port Information for this Site.
```

2. Press **D** (detail). A screen similar to the one below appears.

```
COMMANDS: Update Master Detail Exit
          Find Detail record
-------------------------------------------------------------------------------
                        EDIT CDR COLLECTION INFORMATION
-------------------------------------------------------------------------------

                        Site: LAB MT 2E-524
           Call Record Format: legendbase
           Communication Type:  1
                    Time Zone:  5
             Daylight Savings? Y
```

3. To change any values on display, press **U** (update) and enter information as described at the end of this section. When complete, press **ESC**.
4. To view or edit the interface parameters in use, press **D** (detail).

A screen similar to the one below appears.

```
Direct PBX Interface Parameters:
  PBX Port Baud Rate: 1200
   PBX Port Data Bit: 8
   PBX Port Stop Bit: 1
     PBX Port Parity: N
```

5. Change any values on display by pressing **U** (update) or return to the prior display by pressing **M** (master).
6. When complete, press **ESC**, then **E** (exit). The screen returns to a menu display; you may initiate another function or exit CAS.

Field Information

The list that follows describes valid field entries.

- Site. (Not editable) The site name, from the Edit Site Information screen.
- Call Record Format. The code-name for the interpreter of your switch's call record format. Supported switch formats have codes:

legendbase	MERLIN LEGEND - standard with remote access processing
legendisdn	MERLIN LEGEND- ISDN with remote access processing
legendspcl	MERLIN LEGEND - standard without remote access processing
g1g3-lsu*n*	DEFINITY G1/G3 - non-ISDN, n = 5, 12, 14, 15-digit Account Code
g1g3-auth	DEFINITY G1/G3 - 24 word ISDN unformatted authorization code version
g1g3-u24w	DEFINITY G1/G3- 24-word ISDN unformatted standard
g1g3-f24w	DEFINITY G1/G3- 24-word ISDN formatted expanded

NOTE:
Legendbase and legendisdn call record formats are associated with switch data interfaces designed to process remote access tandem calls as a single record. When they occur, tandem calls generate 2 records: one incoming and one outgoing. The interfaces associated with legendbase and legendisdn draw information from both records to accurately cost and report the call. The switch interpreter associated with the legendspcl format cannot handle remote access tandem calls.

- Communication Type. You must enter **1**.
- Time Zone. The hour difference from Greenwich time. Enter **4** (Atlantic), **5** (Eastern), **6** (Central), **7** (Midwest), **8** (Pacific), **10** (Alaska), **11** (Hawaii).
- Daylight Savings. **Y** (yes) if used; otherwise, **N** (no).
- Direct PBX Interface Parameters. Enter one of the following values:
  - Baud Rate: **110**, **300**, **600**, **1200**, **2400**, **4800**, or **9600**
  - PBX Port Data Bit: **7** or **8**
  - PBX Port Stop Bit: **1** or **2**
  - PBX Port Parity: **E** (even), **O** (odd), or **N** (none)

Editing CDR Port Information

Use this function to view or change the information that identifies the Intuity processor's port connected to the switch and to enable or disable that port.

Procedure

1. From the CAS main menu, select the following sequence.

> CDR Collection Configuration Menu
>
> > Edit CDR Port Information

A screen similar to the sample below appears.

```
                          CDR Port Information                    Page      1
10:25 PM                     Intuity CAS IP8                      Aug 13 1994
--------------------------------------------------------------------------------
TTY Name................tty01
Communication Type......   1
Port Enabled............ Y
Description............. Comm Port 2
End of CDR Port Information
```

2. To change any values on display, press **U** (update) and enter the changes. When complete, press **ESC**.
3. To end the procedure, press **E** (exit). The screen returns to a menu display; you may initiate another function or exit CAS.

Field Information

The list that follows describes the fields in this function.

- Port Name. The UNIX name for a port used for SMDR collection.
- Communication Type. You must enter **1**.
- Port Enabled? Enter **Y** (yes) if port is active, **N** (no) if port is inactive.
- Description. Optional comments.

Listing the CDR Configuration Tables

Use these options to generate a listing of the current values for CDR Collection Information or CDR Port Information (see figure 6-1).

```
                          CDR Collection Information                Page      1
10:22 PM                       Intuity CAS IP8                      Aug 13 1994
                                LAB MT 2E-524
-------------------------------------------------------------------------------
Interface....................... DIRECT
Call Record Format.............. legendbase
Communication Type.............. 1
Baud Rate.......................1200
Data Bit........................8
Stop Bit........................1
Parity..........................N
CDRU Time Zone (CDRU - GMT)..... 5
Daylight Savings................ Y
Record Limit.................... 500
Time Out Limit.................. 300
End of CDR Collection Information
```

Figure 6-1. Sample CDR Collection Table

To list the CDR Collection Information or CDR Port Information table, proceed as follows:

1. From the CAS main menu, select the following sequence.

   > CDR Collection Configuration Menu
   > CDR Configuration Tables Menu
   > *any CDR collection table*

   A screen similar to the one below appears.

```
COMMANDS: Update Generate Exit
          Update the displayed record
-------------------------------------------------------------------------------
                          CDR COLLECTION INFORMATION
-------------------------------------------------------------------------------
        Output Method: T
        Output Device: Your Terminal
```

2. To change values, press **U** (update), complete the `Output Method` and `Device` fields, and press **ESC**. Typical values are:

   a. To display on the terminal, enter method **T**. A device is not required.

   b. To print, enter method **P**, then device **wide 570 | lp** (compressed) or **lp** (uncompressed).

c. To save for later viewing (see *Viewing Reports* in chapter 8), use method **R** (redirect) or **A** (append) and device *filename* (where filename is up to 10 characters long).

3. Press **G** (generate). If you sent the report to the terminal, the screen displays it, one page at a time. Paginate using the arrow keys, **ENTER**, or **PageUp** and **PageDown** keys.

   The procedure is complete. The screen returns to a menu display; you may initiate another function or exit CAS.

Managing the Costing Configuration

7

This chapter describes the functions that allow you to look up and change the costing tables for your site. It is organized into sections following the order of the Costing Configuration Menu.

- *Editing the Carrier Information* — describes how to identify the dialed prefix to access secondary long distance carriers.
- *Editing Cost Adjustments* —describes how to mark up or discount the cost of calls and correct call durations.
- *Editing the Holiday Table* —describes how to identify the dates during which rates are discounted.
- *Editing the Dialed Digit Processing Table* —describes how to identify special numbers and dialed patterns that require additional processing in order to be properly interpreted and costed.
- *Looking Up Rate Tables* — is used to view or update all carriers' rate tables.
- *Listing Costing Tables* — is used to generate any table in the Costing Configuration Menu.

- Figure 7-1 illustrates how CAS uses some costing tables in processing calls.

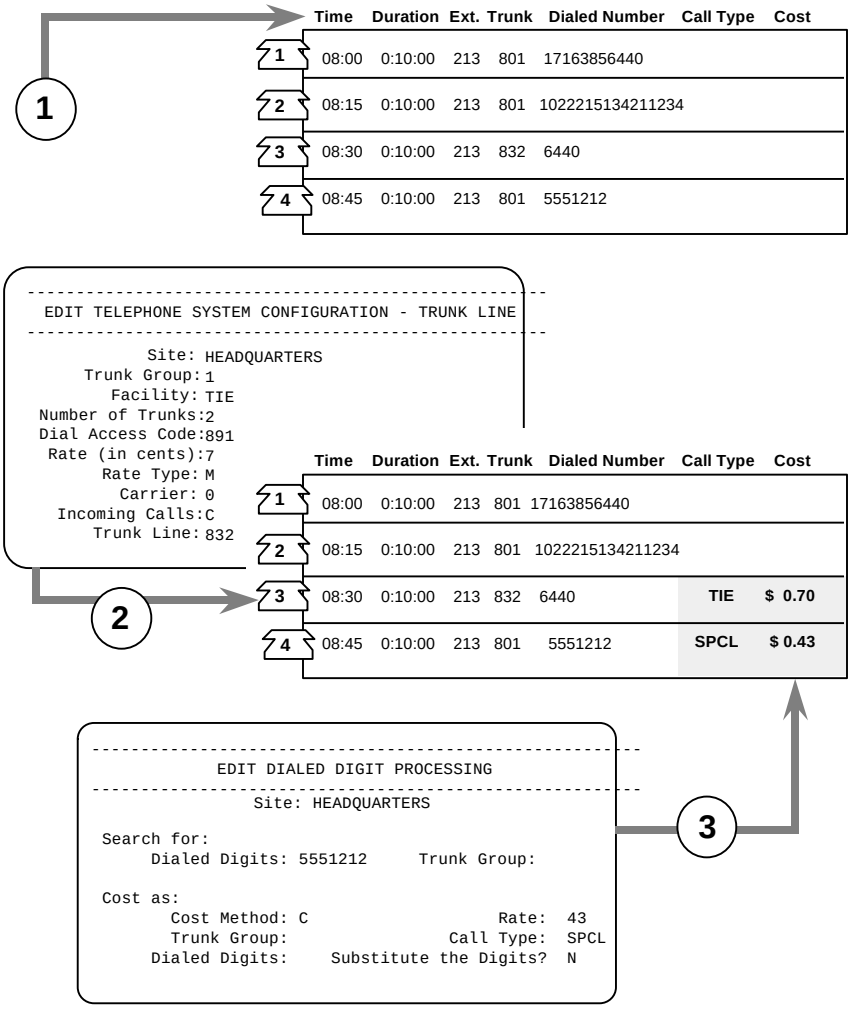

Figure 7-1. Call Costing

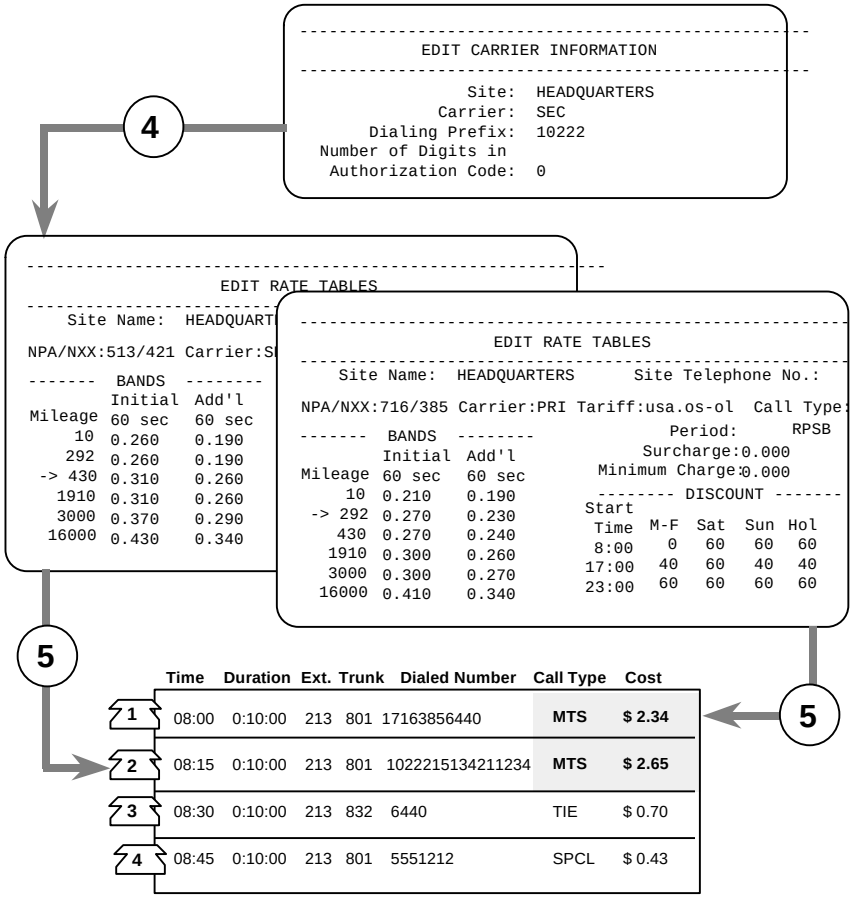

1 Extension 213 places four calls.
2 The Telephone System Configuration identifies the cost of a TIE call.
3 The Dialed Digit Processing table identifies the cost of a “special” call.
4 The Carrier Information identifies the secondary carrier.
5 The Rate Tables find the distance to the area called and calculates the cost of long distance calls using the appropriate carrier’s table.

Figure 7-1. Call Costing (*Concluded)*

Editing the Carrier Information

Use this function to view or change the dialed code to access the services of long distance carriers from your site.

NOTE:
If you have equal access, do not change this information.

Procedure

1. From the CAS main menu, select the following sequence.

> Costing Configuration Menu
>
> > Edit Carrier Information

2. Press **D** (detail). A screen similar to the one below displays.

```
COMMANDS: Next Previous Update Master Exit
          Find next record
--------------------------------------------------------------------------
                          EDIT CARRIER INFORMATION
--------------------------------------------------------------------------

                   Site: LAB MT 2E-524
                Carrier: ATT
         Dialing Prefix: 10288
  Number of Digits in
    Authorization Code: 0
```

3. Press **N** (next) or **P** (previous) until the record of interest appears on display.
4. To make any changes, press **U** (update) and enter new information, as described in the next section. When complete, press **ESC**.
5. Press **E** (exit). The procedure is complete. The screen returns to a menu display; you may initiate another function or exit CAS.

Field Information

The list that follows describes the fields in this function.

- Site. (Not editable) The name of your site, from the Edit Site Information screen.
- Carrier. (Query only) The code name of a long distance carrier whose tariffs have been included as part of the rate customization for the site.
- Dialing Prefix. In equal access areas, this is the 10*xxx* code that you dial to access the carrier's network (do not change this entry); in areas without Equal Access, this is the carrier's local phone number — typically, a 950*xxx* number.
- Number of Digits in Authorization Code. In equal access areas, this should be zero (0); in areas without equal access, this is the length of the account number with that carrier — typically, a 14-digit code.

Editing Cost Adjustments

Use this function to view or change the values by which CAS adjusts the cost of calls, according to its type.

Adjustments are necessary, for example, to add local and state taxes, to mark up (or discount) calls in reselling telephone services to clients, or to correct the call duration reported by switches without answer supervision.

CAS provides default values for every call type in your system that result in the following adjustments:

- No adjustments to incoming calls
- Operator-assisted calls are free
- Non-incoming calls of less than a 30-second duration are discarded
- If a non-incoming call is not discarded, its duration is reduced by 15 seconds

Procedure

1. From the CAS main menu, select the following sequence.

```
> Costing Configuration Menu
    > Edit Cost Adjustments
```

2. Press **D** (detail). A screen similar to the one below appears on display.

```
COMMANDS: Next Previous Update Master Exit
          Find next record
-------------------------------------------------------------------------------
                              EDIT COST ADJUSTMENTS
-------------------------------------------------------------------------------

                          Site: LAB MT 2E-524
                     Call Type: OS-OL
                        Tax (%):   0
                     Markup (%):   0
              Surcharge (cents):   0
          Minimum Charge (cents):  0
             Minimum Duration: 0:00:30
           Network Correction: 0:00:15
```

3. Press **N** (next) or **P** (previous) to bring the call type of interest to the screen.
4. To make any changes, press **U** (update) and enter field values as described in the next section. When complete, press **ESC**.
5. Press **E** (exit). The procedure is complete. The screen returns to a menu display; you may initiate another function or exit CAS.

Field Information

The list that follows describes the fields in this function.

- Site. (Not editable) The name of your site, from the Edit Site Information screen.
- Call Type. (Not editable) The name, one to 5-characters long, that describes a call. CAS costing algorithms derive call type names from a built-in list of call types and user-defined names, as follows:
  - if the dialed number matches a pattern in the Dialed Digit Processing table, it follows the call type naming instructions in the table. CAS includes two built-in call types in this table:

    SPCL Information, 800-, 900-, and other "special" numbers

    ZERO+ Operator assisted call

    See *Editing the Dialed Digit Processing Table* in this chapter.
  - if the call used a non-tariffed facility, it takes the user-defined *facility name* as it appears in the Telephone System Configuration table. See *Editing the Telephone System Configuration Table* in chapter 4.
  - if the call used a tariffed facility, it takes the name INCOM (for an incoming call) or one of the names in the list that follows, depending on the call destination.

IDDD	International Direct Distance Dial
IS-IL	In-State, In-LATA
IS-OL	In-State, Out-of-LATA
LOCAL	Local (usually, a 7-digit call)
OS-IL	Out-of-State, In-LATA
OS-OL	Out-of-State, Out-of-LATA)

    NOTE:
    CAS includes the following list of call types — not used by any costing algorithm — from which you can select *call types* for Dialed Digit Processing or *facilities* for the Telephone System Configuration:

FX	Foreign Exchange call
IWTS*n*	Incoming (only), band *n* WATS call
LATA	Local Access Transport Area
TIE	Tie line call
WATS*n*	Outgoing (or incoming/outgoing), band *n* WATS

- Tax (0 to 100 percent), Markup (-100 to 100 percent), Surcharge (-9999 to 9999 cents), Minimum Charge (0 to 32000 cents) — applied as in the formula that follows (these values are newly computed prior to every report run, without modifying the stored cost).

  Reported cost = the largest of (a) *minimum charge* or (b) adjusted cost, where adjusted cost = (call cost + (call cost x *markup* x 0.01) + *surcharge*) x (1 + (*tax* x 0.01))

- Minimum Duration. A length of time in hours, minutes, and seconds (0:00:00 to 9:59:59) that defines a valid call. Call records with a duration lower than this value are discarded. Default: 30 seconds (any non-INCOM calls), 0 seconds (INCOM calls).

- Network Correction. A length of time in hours, minutes, and seconds (0:00:00 to 9:59:59) subtracted from the duration of a valid call, to account for the time before it is answered. This is done in calculating and storing the cost of the call only; CAS stores call records with the duration reported by the switch. Default: 15 seconds (any non-INCOM calls), 0 seconds (INCOM calls).

Editing the Holiday Table

Use this function to specify (and then look up, change, or remove) the holidays during which rates are discounted.

Procedure

1. From the CAS main menu select the following sequence.

```
> Costing Configuration Menu
    > Edit Holiday Table
```

2. A screen similar to the one below appears on display.

```
COMMANDS: Query Next Previous Add Update Remove Exit
          Query for record
-------------------------------------------------------------------------------
                              EDIT HOLIDAY TABLE
-------------------------------------------------------------------------------

      Date of Holiday: Dec 31 1993
```

   a. To change or remove an entry, press **N** (next) or **P** (previous) to bring the date of interest to the screen; then press **U** (update) or **R** (remove) and make the necessary changes. When complete, press **ESC**.

   b. To create a new holiday, press **A** (add) and enter a new date. When complete, press **ESC**.

3. Press **E** (exit). The procedure is complete. The screen returns to a menu display; you may initiate another function or exit CAS.

Field Information

- Date of Holiday. The date of a holiday when telephone companies offer discounts. Use the format *mm/dd/yy* (for example **01/01/90**), *mm/dd/yyyy* (for example, **01/01/1990**), or *mmm dd yyyy* (for example, **Jan 01 1990**).

Editing the Dialed Digit Processing Table

This function is used to identify certain dialed number patterns that require additional processing in order to be properly interpreted and costed.

Dialed digit processing (DDP) occurs as soon as CAS receives a call record and identifies the trunk group. At this point, DDP checks if the call is dialed in any of the specified number patterns and/or trunk groups and, upon a match, either:

- Discards the call
- Costs the call according to your instructions:
  - At a specified rate per minute or per call
  - As if routed through another trunk group
  - As if dialed using a substitute dialed number pattern

If the call is not discarded, you may further instruct CAS to report the call under a specified call type and/or the substitute dialed number.

CAS includes a default DDP table with values similar to figure 7-2. These entries take care of most dialed number exceptions and may not require any additions or corrections:

- Operator assisted calls are directed to use AT&T's operator assisted rates (or MCI's operator assisted rates via the special-purpose trunk group 9999); the call type is set to ZERO+ and equal access prefixes are removed from the dialed number.
- Calls to directory assistance, "dial-it" services, 800, and 900 service numbers are costed at special rates (these values should have been updated at installation, as they may vary for each locality); the call type is set to SPCL.
- Incompletely dialed calls are discarded.

Search Pattern	**Replace Pattern**							
Dialed Digits	Trunk Group	Cost Method	Rate (cents)	Trunk Group	Call Type	Dialed Digits	Substitute Digits?	
0%		T	0		Zero+		N	operator assisted (OA)
011????????%		T				0%	N	international (not OA)
102220%		T	0	9999	Zero+	011%	Y	MCI operator assisted
10222011%		T		9999		011%	Y	MCI int'l. (not OA)
10???0%		T	0		Zero+	0%	Y	IXC operator assisted
10???011%		T				011%	Y	IXC int'l. (not OA)
1800???????%		C	0		Spcl		N	toll free call
1900???????%		M	50		Spcl		N	900 service numbers
411		C	43		Spcl		N	local information
5551212		C	43		SPCL		N	local information
800???????%		C	0		SPCL		N	toll free call
900???????%		M	50		SPCL		N	900 service numbers
911		C	0		SPCL		N	emergency
976????		M	50		SPCL		N	dial-it local services
?		D						incompletely dialed call
?11		C	0		SPCL		N	general x11 telephone srvc.
?411		C	43		SPCL		N	local information
?5551212		C	43		SPCL		N	local information
??		D						incompletely dialed call
???		D						incompletely dialed call
???5551212		C	60		SPCL		N	long distance information
????		D						incompletely dialed call
????5551212		C	60		SPCL			long distance information
?????		D						incompletely dialed call
??????		D						incompletely dialed call

Figure 7-2. Default Dialed Digit Processing Table (from Planning Form)

Other cases when you should use dialed digit processing are:

- The switch reports "speed dialed" codes in the call record instead of the programmed number. To be able to cost the call, the actual number should be substituted.
- The switch is connected to a remote switch. To be able to cost a call routed via the remote switch, you must remove the second *dial access code* from the dialed number reported by the local switch.
- The switch reports the # or * dialed by users at the site — typically, to leave a voice mail message on some switches. To interpret the called number properly, you must remove these characters from any 7- to 12-digit number patterns as follows:

Search for:	**Replace by:**
????????#% and **????????*%**	**???????**
?????????#% and **?????????*%**	**????????**
??????????#% and **??????????*%**	**?????????**
???????????#% and **???????????*%**	**??????????**
????????????#% and **????????????*%**	**???????????**
?????????????#% and **?????????????*%**	**????????????**

- The site uses TIE lines and the switch outputs RNX codes for on-net calls. To report the area called, you should substitute the dialed number as if you had used the public network.
- You want to mask sensitive phone numbers or lines that require privacy. To do so, you may replace the last 4 digits dialed by a masking number — for example 9999.

Procedure

1. From the CAS main menu, select the following sequence.

> Costing Configuration Menu
>
> > Edit Dialed Digit Processing Table

2. Press **D** (detail). A screen similar to the one on the next page appears on display.

```
COMMANDS: Query Next Previous Add Update Remove Master Exit
          Query for record
-------------------------------------------------------------------------------
                        EDIT DIALED DIGIT PROCESSING
-------------------------------------------------------------------------------

                         Site: LAB MT 2E-524

Search For:
          Dialed Digits: ?411                    Trunk Group:

Cost As:
            Cost Method: C                 Rate Rate ( cost per call ):   50
            Trunk Group:                                Call Type: SPCL
          Dialed Digits:                       Substitute The Digits? N
```

3. To view every entry, press **N** (next) (or **P** (previous) until you reach the end of the table.
4. To change any values on display, press **U** (update) and enter the changes. When complete, press **ESC**.
5. To add an entry, press **A** (add) and enter field values as described in the next section. When complete, press **ESC**.
6. Press **E** (exit). The procedure is complete. The screen returns to a menu display; you may initiate another function or exit CAS.

Field Information

The list that follows describes the fields in this function.

- Site. (Not editable) The name of your site, from the Edit Site Information screen.
- Search for. The Dialed Digits and Trunk Group that require additional processing.
  - Dialed Digits. A dialing pattern defined as a sequence of up to 16 digits (0 - 9) and/or # and *. Use ? and % as wild cards:

    ? represents any single character in that position. For example, **385????** is any 7-digit number with 385 as a local exchange.

    % represents any number of trailing characters at the end of the pattern. For example, **0%** is any number starting with 0.
  - Trunk Group. A valid trunk group number for your system. Trunk groups identify the costing of calls routed through their trunk members (see *Editing the Telephone System Configuration* in chapter 4). A blank indicates any trunk.
- Cost as. The costing and replacement instructions for processing calls that match the Search for conditions.
  - Cost Method. Select one of the following choices:
    - **D** — discard call (the rest of the Cost as fields are ignored)
    - **T** — cost as routed via the specified trunk group (rate is ignored)
    - **M** — cost per minute at the specified rate (trunk group is ignored)
    - **C** — cost per call at the specified rate (trunk group is ignored)
  - Rate. **0** to **32000** cents per minute or call.
  - Call Type. The name of a valid type for your system. A blank indicates the type associated with the call as dialed or trunk used.
  - Trunk Group. A valid trunk group number for your system. A blank indicates the costing normally associated with the trunk used.
  - Dialed Digits. A dialing pattern of up to 16 digits that defines replacement rules for the Search for dialing pattern.
    - Every digit represented by a **?** in the search pattern is matched to a **?** in the replace pattern by its position from the left. For example, replacing **1716385????** with **385????** results in
    - reported as (local) 385-6440.
    - Trailing digits represented by a **%** in the search pattern are matched to a **%** in the replace pattern (if a **%** is not present in the replace pattern, the digits are dropped). For example, replacing **10222%** with **%** results in 10222-1-716-385-6440 (MCI) reported as (AT&T) 1-716-385-6440.
    - If there are less **?**s to replace the search pattern, the right-most matches are discarded. For example, replacing **?385????** with **385????** results in 1-385-6440 reported as 385-1644.
  - Substitute the Digits? **Y** (yes) stores the new number; **N** (no) retains the number reported by the switch. The default is **N**.

Editing Rate Tables

Use this function to look up any one of your carrier's direct or operator assisted rates for a specific area code/exchange in the U.S. or country code abroad.

We do not recommend using the Edit Rate Tables function for updating your rates. You can obtain greater costing accuracy, especially for local and in-state calls, by installing a custom rate table update.

Procedure

1. From the CAS main menu, select the following sequence.

> Costing Configuration Menu
>
> > Edit Rate Table

2. Press **D** (detail).

   CAS retrieves all rate tables and displays the first one on the screen, similar to the sample below. Note the following information:

```
COMMANDS: Query Change carrier Next Previous Update Master
          Query for record
-----------------------------------------------------------------------------
                              EDIT RATE TABLES
-----------------------------------------------------------------------------
       Site Name: LAB MT 2E-524   Site Telephone No.: 1066
NPA/NXX:          Carrier: ATT   Tariff: us-osol      Call Type: OS-OL
------------- BANDS ---------------                  Period: DAY      RPSB
              Initial    Add'l                     Surcharge:    0.000
   Mileage     60 sec    60 sec                Minimum Charge:    0.000
        22     0.230     0.230          -------------- DISCOUNT --------------
        55     0.240     0.240           Start
       124     0.250     0.250           Time    M-F    Sat    Sun    Hol
       292     0.250     0.250            8:00   DAY    NITE   NITE   HOL
       430     0.260     0.260           17:00   EVE    NITE   EVE    HOL
       925     0.270     0.270           23:00   NITE   NITE   NITE   NITE
      1910     0.270     0.270
      3000     0.270     0.270
     16000     0.330     0.330
```

   a. (Bottom left) Bands by mileage or country name show the rates in dollars and cents for the initial and additional time intervals

   b. (Bottom right) Discounts for the time of day, day of the week, weekend, and holidays show a percentage value or the name of a period DAY, EVE, NITE, HOL, etc. — as described under *Field Information.*

5. Press **C** (change) carrier to select rate tables for the carrier or carrier service of interest.

   The names of installed carriers will cycle in the `Carrier` field. The `Bands` and `Discount` tables will change to display the appropriate information for the carrier.

6. To look up the rates for a specific area, press **Q** (query), enter the area code and exchange (or country code) in the `NPA/NXX` field, and press **ESC**.

   The appropriate table appears on display, with an arrow by the mileage band for that area. For example, it may show on the bottom of the screen:

```
NPA/NXX: 315/458
---------- BANDS ----------
           Initial  Add'l
 Mileage   60 sec   60 sec
 10        0.260    0.190  --------- DISCOUNT ----------
 ->292     0.260    0.190  Start
 430       0.310    0.260  Time     M-F   Sat   Sun   Hol
 1910      0.310    0.260   8:00    0     60    60    60
 3000      0.370    0.290  17:00    40    60    40    40
 16000     0.430    0.430  23:00    60    60    60    60
```

NOTE:
Use this display to calculate the cost of a call to that area code/exchange — for example, a 10-minute call placed on a Friday at 6:00 p.m. — as follows:

Initial minute	$ 0.26
Plus 9 additional minutes	+1.71
Subtotal	$1.97
Less 40% discount	-0.79
Cost of call	$1.18

7. To end the procedure, press **M** (master), then **E** (exit). The screen returns to a menu display; you may initiate another function or exit CAS.

Field Information

The list that follows describes the fields in this function.

- Site Name and Telephone Number. (Display only) The name and phone number associated with this site.
- NPA/NXX. A valid area code and exchange separated by a slash (/) for long distance domestic calls, or the country code for international calls. Used to query rates for a specific area (see *Procedure*).
- Carrier. The display cycles through the code-name for the built-in carriers' direct and operator-assisted rate schedules.
- Tariff. (Display only) The internal name of the file, for example, usa.os-ol for message telephone services (MTS) rates.
- Call Type. (Display only) One of the call type designations defined for your system.
- Bands. The rates for the period (see below) in tabular form. Rates are specified in dollars to three decimal places for each initial and additional time intervals. Time intervals are expressed in whole seconds.
- Period. (Display only) The name of the rate period.
  - The field is blank if the tariff specifies rate period discounts as a % of standard rates. In this case, the Bands contain the standard rates and the Discount table contains the specific % discount values.
  - The names DAY, EVE, NITE (or STD, DISC, ECON), and HOL. In this case, the Bands contain the rates of the specified period and the Discount table displays the rate period names.

The letters RPSB (rate period specific billing) appear next to this field if the discount for a rate period is applied only to the portion of a call within that period (otherwise, discounts in effect at the start of the call are applied to the entire call).

- Surcharge/Minimum Charge. Flat rates expressed in dollars to three decimal places used in the formula:

  Call cost = the greatest of (a) minimum charge or (b) call cost less applicable discount plus surcharge

  The rate table's carrier determines these charges. The surcharge generally represents a special service fee.

- Discount. The display of specific discount values or rate period names in tabular form. When a discount entry is changed, all entries for the entire period change. Rate period's starting and ending times are not editable.

Listing Costing Tables

This function is used to generate any of the tables below.

- Carrier Information
- Cost Adjustments
- Holiday Table
- Dialed Digit Processing Table

We recommend printing tables after database updates. To list a costing table, proceed as follows:

1. From the CAS main menu, select the following sequence.

   > Costing Configuration Menu
   > Costing Tables Menu
   > *any database table*

   A screen similar to the one below appears on display.

```
COMMANDS: Update Generate Exit
          Update the displayed record
-------------------------------------------------------------------------------
                              DIALED DIGIT PROCESSING
-------------------------------------------------------------------------------
         Output Method: T
         Output Device: Your Terminal
```

2. To change values, press **U** (update), complete the `Output Method` and `Device` fields, and press **ESC**. Enter one of the values described below

   a. To display on the terminal, enter method **T**. A device is not required.

   b. To print, enter method **P**, then device **wide 570 | lp** (compressed) or **lp** (uncompressed).

   c. To save for later viewing (see *Viewing Reports* in chapter 8), use method **R** (redirect) or **A** (append) and device *filename* (where *filename* is up to 10 characters long).

3. Press **G** (generate). If you sent the report to the terminal, the screen displays it, one page at a time. Paginate using the arrow keys, **ENTER**, or **PageUp** and **PageDown** keys.

   The procedure is complete. The screen returns to a menu display; you may initiate another function or exit CAS.

```
11:04 PM                    Cost Adjustments                    Page      1
                            Intuity CAS IP8                     Aug 13 1994
                             LAB MT 2E-524
-----------------------------------------------------------------------------
                                          Minimum   Minimum     Network
 Calltype   Tax (%)   Markup       Surcharge  Charge    Duration   Correction
 --------   -------   ----------   ---------  -------   --------   ----------
   FX        0          0              $.00     $.00    0:00:30      0:00:15
   IDDD
   INCOM
   IS-IL
   IS-OL
   IWTS0
   IWTS1
   IWTS2
   IWTS3
   IWTS4
   IWTS5
   IWTS6
   LATA
   LOCAL
   OS-IL
```

```
11:04 PM                    Cost Adjustments                    Page      1
                            Intuity CAS IP8                     Aug 13 1994
                             LAB MT 2E-524
-----------------------------------------------------------------------------
                                          Minimum   Minimum     Network
 Calltype   Tax (%)   Markup       Surcharge  Charge    Duration   Correction
 --------   -------   ----------   ---------  -------   --------   ----------
   FX        0          0              $.00     $.00    0:00:30      0:00:15
   IDDD
   INCOM
   IS-IL
   IS-OL
   IWTS0
   IWTS1
   IWTS2
   IWTS3
   IWTS4
   IWTS5
   IWTS6
   LATA
   LOCAL
   OS-IL
```

```
11:12 PM                    Dialed Digit Processing                 Page      1
                                Intuity CAS IP8                     Aug 13 1994
                                 LAB MT 2E-524
-----------------------------------------------------------------------------
Search For:                 Cost As:
Dialed              Trunk   Cost            Trunk Dialed            Call
Digits              Group   Method    Rate  Group Digits            Type  Substitute
----------------- ------- -------- -------- ----- ----------------- ----- ----------
0%                          Trunk     $.00                            ZERO+    N
011?????????%               Trunk     $.00                                     N
102220%
10222011%
10????0%
10????011%
15551212
18002?????
19002?????
411
5551212
8002??????
9002??????
911
```

```
11:06 PM                    Holiday Table                       Page      1
                            Intuity CAS IP8                     Aug 13 1994
-----------------------------------------------------------------------------
                            Holiday Date
                            ------------
                            1993
                                  Dec 31
                            1994
                                  Jan 17
                                  Feb 21
                                  May 30
                                  Jul 04
                                  Sep 05
                                  Oct 10
                                  Nov 11
                                  Nov 24
                                  Dec 26
                            1995
                                  Jan 02
                                  Jan 16
                                  Feb 20
                                  May 29
```

Figure 7-3. Costing Table Samples

Using Standard Operating Processes

8

This chapter describes the functions usedduring normal CAS operation You perform some of these operations using the CAS application; use Intuity screens to execute others. It is organized into the following sections.

- *Deleting Call Records from Storage*
- *Configuring Call Reporting*
- *Viewing Reports*
- *Viewing Logs*
- *Administering CAS Password*
- *Backing Up and Restoring CAS Data*
- *Checking System Storage*
- *Listing System Tables*
- *Verifying System Status*
- *Viewing Installed Software*

Deleting Call Records from Storage

Use this function to display call storage usage and/or to delete call records in storage.

NOTE:
See *Verifying System Status*, later in this chapter, for another method of displaying call record storage information.

Procedure

1. From the CAS main menu, select:

   A screen similar to the one below appears.

   > System Configuration Menu

   > Delete Call Records

```
COMMANDS: Start Exit
Start - <ESC> to start, ^C to cancel
--------------------------------------------------------------------------------
                              DELETE CALL RECORDS
--------------------------------------------------------------------------------

    Delete Call Records before: 08/12/94
 Number of Call Records stored: 40
    Date of oldest Call Record: Aug 12 1994
    Date of newest Call Record: Aug 12 1994
```

2. Press **S** (start) and enter a cut-off date. The note at the bottom of the screen displays the system's suggested date (for example, Jan 2 1990). When complete, press **ESC**.
3. Press **E** (exit).

   The procedure is complete. The screen returns to a menu display; you may initiate another function or exit CAS.

Field Description

The following list describes the fields in this function.

- Delete Call Records Before This field indicates the cut-off date — in the format *mm/dd/yy* (for example, **01/01/70**), *mm/dd/yyyy* (for example, **01/01/1970**), or *mmm dd yyyy* (for example, **Jan 1 1970**) — for deleting call records. Calls dated on or after that date are retained.
- Number of Call Records Stored. (Display only) The total number of call records in storage.
- Date of Oldest/Newest Call Record. (Display only) The range of dates of call records in storage.

Configuring Call Reporting

Use this function to specify call record storage and print options at the time call records are processed.

Procedure

1. From the CAS main menu, select

```
> System Configuration Menu
  >Call Reporting Configuration
```

A screen similar to the one below appears.

```
COMMANDS: Update Exit
          Update the displayed record
--------------------------------------------------------------------------------
                        EDIT CALL REPORTING CONFIGURATION
--------------------------------------------------------------------------------

                                     Store all local calls? Y
   Store any call whose duration is greater than (seconds):    30

                                 Print:  All Stored calls? Y
        or
         Any call whose duration is greater than (seconds):  3600
                              or whose cost is greater than: $100.00

 Output Method: A
 Output Device: /dev/null
```

2. Press **U** (update) and enter field values as described in the next section. When complete, press **ESC**.
3. Press **E** (exit). The procedure is complete. The screen returns to a menu display; you may initiate another function or exit CAS.

Field Description

The following list describes the fields in this function.

- Store all local calls? Enter **N** (no) to discard local calls or **Y** (yes) otherwise.
- Store any call whose duration is greater than Enter a time in(seconds) in the range 0 to 32000.

- Print:
  - All stored calls: Enter **Y** (yes) to generate a listing of calls as they are collected, or **N** (no) to generate a listing of calls that exceed the cost or duration specified below.
  - Any call whose duration is greater than the specified time: 0 to 32000 seconds;
  - or whose cost is greater than the specified amount: $0.00 to $320.00
- Output Method **A** (append) or **R** (redirect) and Output Device (the full UNIX path-name to a device or file) identify how and where to generate the print options above. Typical entries are:
  - **A** (append) to `/dev/null` (to disable the print options)
  - **A** (append to `/cas/cas/errlogs`*/name* (to access the listing via `VIEW LOGS`, under the file named *name*. (This assumes that `/cas` is the CAS "home" directory.)

NOTE:
If you use the second definition, we recommend examining the named file from time to time, as all files in `VIEW LOGS` have a size constraint and you may lose information

Viewing Reports

Use this function to display, print, or delete reports or table listings that were output to a system file using the append or redirect output methods.

To access reports from a system file, proceed as follows:

1. From the CAS main menu, select

```
> System Configuration Menu
    > View Reports
```

A screen similar to the one below appears. Notice that the system has added the file extension ".usr" to the files you named.

```
-------------------------------------------------------------------------------
                                   VIEW REPORTS
-------------------------------------------------------------------------------
  1 report26.out.usr      4 report29.out.usr      D Delete a report
  2 report27.out.usr      P Print a report        E Previous Menu
  3 report28.out.usr

Your View choice: ■
```

2. Choose any of the following options:

   a. To display a report, enter its menu number.

b. To print a report on the system printer, press **P** (print) and then, its menu number.

c. To delete a report, press **D** (delete) and then, its menu number.

3. To return to the previous menu, press **E**.
4. When the screen returns to a menu display; you may initiate another function or exit CAS.

Viewing CAS Logs

Use this function to display the logs of system processes whenever an event — errors, software installations, the call monitor, etc. — triggers the creation of a log file. This function is a tool for CAS support personnel to help resolve any problems with the system.

Typically, CAS logs the date, time, and usage information of significant events. Events associated with an error list the error code and a brief message. Subsequent events append messages to an existing file. Table 8-1 lists the most common log file names and a brief description of its contents.

All logs have size constraints to prevent running out of space. If the file becomes larger than 50K, CAS clears the oldest entries as follows:

- SMDR_1 file is truncated to 50K every 30 minutes
- poller and report files create up to three additional file extensions — *file*.1, *file*.2, and *file*.3 — moving the older data into the larger numbered extension. After reaching capacity on all four files, new data "bumps" older data into the next higher file extension, with the oldest data cleared out of *file*.3.
- All other files are truncated to 4K automatically

1. From the CAS main menu, select:

```
> System Configuration Menu
    > View Logs
```

A screen similar to the one below appears.

```
-------------------------------------------------------------------------------
                                   VIEW LOGS
-------------------------------------------------------------------------------
  1 SMDR_1               10 install/site081194   18 options
  2 chkctrl.log          11 install/site081394   19 poller
  3 chkfe.log            12 install/software     20 reports
  4 chkpc.log            13 install/upd081194    21 reports.1
  5 dbwork               14 install/va081194     22 reports.2
  6 frontend             15 killfelog             P Print a log
  7 install/ht081194     16 monitor               D Delete a log
  8 install/pbx081194    17 monitor.log           E Previous Menu
  9 install/setup081194

Your View choice: _
```

2. Choose one of the following options:

a. To display a log's contents, enter its menu number.

b. To print a log's contents,press **P** (print) and then, its menu number.

c. To delete a log's contents,press **D** (delete) and then, its menu number.

3. To end a viewing session, enter **E**.

   When the screen returns to a menu display; you may initiate another function or exit CAS.

Table 8-1. CAS Log Files

File Name	Contents
chkctrl.log	Background task usage log
chkfe.log	Switch interface controller usage log
chkpc.log	Stop/start call costing usage log
cost	Costing event — typically, call processing stopped under abnormal circumstances
dbwork	Database event — typically a severe error
delcr	Delete call record usage log
fe.err	Switch interface event — typically, rejected call records due to format errors
form	screen display problem
frontend	Switch interface error — typically severe
install/pbx*mmddyy*	Install PBX/KTS interfaces log
install/setup*mmddyy*	CAS initial software setup log
install/sgupd*mmddyy*	install a custom rate update log
install/site*mmddyy*	Install site log
install/software	CAS installation log
install/upd*mmddyy*	Install a system update log
loadorg*mmddyy*	Load organization table usage log
mail for <*CAS login*>	UNIX mail
misc	Miscellaneous event
rate edit.log	Rate edit usage log
reports or reports.*n*	Report generation and table listing usage log
SMDR_1	Call record stream from the switch

Administering CAS's Password (*sa*)

Use this procedure to change the *sa* login password.

1. From the Intuity Administration Menu, select:

   > Customer/Services Administration
   > System Management
   > UNIX Management
   > Password Administration

2. Select the **sa** login and press **Y** (yes) to confirm you wish to change the password.

   Otherwise, press **N** (no) to cancel the request and return to the Password Administration screen.

3. Enter your new password at the following prompt.

   `New password:`

   Passwords must be at least 6 characters.

4. Enter the new password again at the following prompt.

   `Re-enter new password:`

5. Press **CANCEL** to return to the UNIX Management Screen.

Backing Up and Restoring CAS Data

You can backup and restore CAS data using functions in the CAS application or the Intuity system software. These functions are used primarily to rebuild CAS after an application or platform failure.

- Backup to disk. Use CAS's Backup CAS Data to copy the call record and other CAS databases onto diskettes; use Restore CAS Data to reload backup data.
- Backup to tape. The Intuity system software provides several types of backups.
  - *Unattended* backups occur automatically at 3:00 a.m. each morning. They contain all information necessary to make the Intuity system, and all applications present at backup time (including CAS), operational — but **DO NOT INCLUDE THE CALL RECORD DATABASE**.

    NOTE:
    See *Intuity Platform Administration and Maintenance for Release 2.0*, for more information about unattended backups.

- Manual *attended* backups allow you to choose the applications you wish to backup. If you select CAS, the call record database is part of the backup. Use this type of backup to avoid losing information entered since the last unattended backup.

  NOTE:
  You can manually create an unattended backup by selecting the System Data field in the Intuity backup feature.

Using CAS to Perform a Backup to Disk

1. From the CAS main menu, select:

   > System Configuration Menu
   > Diagnostics & Monitoring Menu
   > Backup CAS Data

   The screen displays a message that call costing is stopping and prompts you to continue.

2. If you need to abort the procedure at this point, press **ESC**; otherwise, press **ENTER**.

   The screen displays the approximate number of diskettes required and the time it will take to perform the operation.

3. If you need to abort the procedure at this point, press **ESC**; otherwise, press **ENTER**.

4. Label "CAS BACKUP" diskettes with today's date and order number.

   CAUTION:
   Do not omit step 4. Restoring data requires reloading diskettes from the same backup, in the proper order.

5. Insert the first disk, and press **ENTER**.

CAUTION:
An automatic disk format occurs before the backup process begins. Make sure the disks you use for backups are blank or do not contain information you need to retain.

5. When prompted, remove the disk, and follow the screen instructions to continue.

   When the backup is complete, a screen message prompts you to `Restart CAS Call Costing? Y/N`

6. Press **Y** (yes), and press **ENTER** to end the procedure.

   The screen returns to a menu display. Your system is back to normal operations.

Using CAS to Perform a Restore from Disk

1. From the CAS main menu, select:

```
> System Configuration Menu
    > Diagnostics & Monitoring Menu
        > Restore CAS Data
```

2. If prompted, select the drive to use. Make certain that the set of "CAS BACKUP" diskettes you intend to restore are from the correct date and in proper order for insertion.
3. Insert the first diskette and press **ENTER**. When prompted, remove the diskette and follow the screen instructions to continue.

   When the operation is complete, the CAS menu system appears. You may initiate another function or exit CAS.

Using Intuity to Perform an Attended Backup

You can run an attended backup at any time using the procedure below. Prior to beginning the backup, format the tape using the Intuity system software.

1. Log into the Intuity system as **sa**.

```
> Customer/Services Administration
    >Backup/Restore
        > Backup
```

2. Begin at the Intuity Administration menu, and select the following sequence:

3. Enter **Y** (yes) in the fields for the data types you wish to backup, otherwise enter **N** (no).

   NOTE:
   The data type selections available on the Backup screen depend on your system's configuration. The selections include the applications running on the Intuity system (CAS and others) and the System Data (for a manual unattended backup).

4. Press **SAVE** (F3) to backup the select data types.

   The system calculates the number of tapes needed.

   ```
   the backup will need:
   x yyyMB cartridge tape(s)
   ```

   Where *x* is the number of tapes and *yyy* is the size of the tapes. Make sure that you have enough cartridge tapes to accommodate the backup.

   The following message displays:

   ```
   please insert a tape into the tape drive to backup
   press <Enter> when tape is inserted
   press <Esc> key to terminate the backup
   ```

5. Insert the first cartridge tape in the tape drive.

   It takes approximately 3 hours to back up 525 Mbytes of data (one tape) with the verify option turned on. If the verify option is not on, it takes approximately half that time to back up one tape.

6. Press **ENTER** when the light on the tape drive goes off. Or press **ESC** to cancel the backup.

   NOTE:
   If the backup fails, the following message displays: `Backup Failed`. Access the Alarm Log and take appropriate action.

   The tape drive light is on when a backup is occurring and various status messages display on the screen.

7. Insert subsequent tapes when prompted.

   When the backup successfully completes, the following message appears:

   ```
   backup process has been completed successfully
   press any key to continue
   ```

8. Follow the screen instructions and press **CANCEL** to return to the Customer/Services Administration menu.

Using Intuity to Restore a Backup

Use the following procedure to restore a backup. It takes approximately 2 hours to restore 525 Mbytes of data (one tape).

NOTE:
Use this restore procedure for both attended and unattended backups.

1. Log into the Intuity system as **sa**.
2. Begin at the Intuity Administration menu, and select the following sequence.

```
> Customer/Services Administration
    > System Management
        > System Control
            > Stop Voice System
```

Stopping the voice system takes about 5 to 10 minutes. When the process is finished, you see the following message: `The Voice System has stopped`.

3. Press **ENTER** to continue.
4. Press **CANCEL** (F6) twice to return to the Customer/Service Administration menu.
5. Begin at the Customer/Service Administration menu and select the following sequence.

```
>Backup/Restore
    > Restore
```

The following message displays:

```
please insert a tape into the tape drive to restore
press Enter when tape is inserted
press Esc key to terminate the restore
```

6. Insert the cartridge tape that contains the data you wish to restore into the tape drive.
7. Press **ENTER** to continue.

   The system displays the tape's header information that includes a list of applications with release and version numbers.
8. Verify that this tape contains the data you wish to restore.

   If not, press **ESC**, return to step 5, and try another tape. Otherwise enter **Y** (yes) in the fields for the data types you wish to restore, and enter **N** (no) in all others.
9. Press **SAVE** (F3) to restore the data types you selected.

   The tape drive light is one when a restore occurs.
10. Insert subsequent tapes if prompted.

    If the restore fails the following message displays: `Restore Failed`. Attempt the restore again by removing the tape from the tape drive then reinserting it. (This allows the tape to rewind.) And return to step 5. If it fails a second time, access the alarm log and follow associated repair actions for any active alarms in the log.

    When the restore completes the following message appears.

    ```
    restore process has been completed successfully
    ```
11. Press any key to continue

12. Press **ENTER** to continue.
13. Press **CANCEL** (F6) twice to return to the `Customer/Service Administration` menu.

    Begin at the `Customer/Services Administration` menu and select the following sequence.

    > System Management
    > System Control
    > Start Voice System

    When the process completes, the following message displays: `Startup of the Voice System is complete`.
14. Press **ENTER** to continue.

NOTE:
This procedure will restore the CAS application completely. Intuity database audits automatically run in the background to synchronize the restore data with the system. You should check the restore processes of all other applications for possible special instructions.

Updating CAS Software

Use the functions listed below for the operations described:

- Install PBX/KTS Interfaces to load any PBX/KTS Interface diskette after the initial CAS software installation
- Install Update to load any other diskette containing a rate update, system upgrade, or any CAS option

1. From the CAS main menu, select:

```
> System Configuration Menu
```

2. Then select:

```
> Install PBX/KTS Interfaces
```

or

```
> Install Update
```

3. Enter **C** (cartridge tape) or **F** (floppy disk) to indicate the installation medium.
4. Insert the medium into the drive and press **ENTER**.
5. When prompted, remove the diskette from the drive, then press **ENTER** to conclude the update and return to the System Configuration menu.

   Your system is back to normal operations. You may initiate another function or exit CAS.

Checking System Storage

Use this function to check on disk usage.

1. From CAS main menu, select:

```
> System Configuration Menu
    > Diagnostics & Monitoring Menu
        > Check System
```

The screen lists under `File System` and `Total Blocks` the disk partitions and the space allocated to them by the system administrator when UNIX was installed. A block is512 bytes (0.5 K) of storage.

```
--------------------------------------------------------------------------------
                                   CHECK SYSTEM
--------------------------------------------------------------------------------
Today's Date............08/13/94
Package Name............Call Accounting System
Package Version.........VEX2.0-1

File System       Free Mbytes     Total Mbytes    Used
---------------   ------------    ------------    ----
/                          28             112     75%
/VM                        22              35     37%
/cas                       15              22     31%
/mtce                      13              20     35%
/netw                      13              19     31%
/spm                        2               4     50%
/stand                      3               8     62%
/update                     8              10     20%
/vm                       255             260      1%
/voice1                    22              38     42%
/vs                        21              35     40%
Call Records                                0

Press <RETURN> to continue.
```

2. To estimate the space available for call records, multiply the number of `Free Blocks` under `/cas` by 3.63. For example, the above display shows that there is enough room for 73422 x 3.63 = 266,522 call records.
3. To return to the prior menu, press **ENTER**.

Listing System Tables

Use this functionto generate any of the tables below:

- Call Reporting Configuration
- Selection Report Criteria
- Selection Criteria for all Organization Reports
- Report Schedules
- The entire set of system tables, except for the Directory Reports

To list a system table, proceed as follows:

1. From the CAS main menu select:

```
>System Configuration Menu
    > System Tables Menu
        > desired table
```

A screen similar to the one below appears on display.

```
COMMANDS: Update Generate Exit
          Update the displayed record
--------------------------------------------------------------------------------
                        CALL REPORTING CONFIGURATION
--------------------------------------------------------------------------------
        Output Method: T
        Output Device: Your Terminal
```

2. To change values, press **U** (update), complete the `Output Method` and `Device` field, and press **ESC**. Typical values are:

   a. To display on the terminal, enter method **T**. A device is not required.

   b. To print, enter method **P**, then device **wide 570 | lp** (compressed) or **lp** (uncompressed).

   c. To save for later viewing (see *Viewing Reports* in this chapter), use method **R** (redirect) or **A** (append) and device *filename* (where *filename* is up to 10 characters long).

3. Press **G** (generate). If you sent the report to the terminal, the screen displays it, one page at a time (see figure 8-1). Paginate using the arrow keys, **ENTER**, or Δ and ∇ keys.

4. The procedure is complete. The screen returns to a menu display; you may initiate another function or exit CAS.

```
                        Call Reporting Configuration                Page      1
11:58 PM                      Intuity CAS IP8                       Aug 13 1994
--------------------------------------------------------------------------------
Store all local calls:                          Y
Store any call with duration greater than:      0:00:30
Print all stored calls:                         Y
Print any call with duration greater than:      1:00:00
Print any call with cost greater than:          $100.00
Call Processing Output:
  Method:       Append
  Device Name:  /dev/null
End of Call Reporting Configuration...
```

Figure 8-1. Sample System Table

Verifying System Status

The Intuity Verify System Status window displays information about the applications running on the Intuity system. The information related to CAS details the call record database.

1. To view the Intuity system status information, select the following sequence.

> Customer/Service Administration
>
> > System Verification
> >
> > > Verify System Status

The Verify System Status screen displays information similar to that listed below:

```
CAS Call records disk space available:  15 MBytes
CAS Call records disk space used:  5 MBytes

Number of call records stored:  33120
Maximum number of call records: 98272
Date of first call stored:  Oct 1 1994
Date of last call record stored:  Oct 15 1994

Call collection is running
Call processing is running

Number of buffered call data record files:  0
CAS disk space monitoring status:  OK
CAS inodes monitoring status:  Ok
```

2. Use the arrow keys or press **NEXTPAGE** (F2) or **PREVPAGE** (F3) to view all information.
3. Press **CANCEL** (F6) until you return to the `Customer/Service Administration` menu or the `INTUITY Administration` menu.

NOTE:
You should check the manuals of all other applications running on your Intuity system to interpret non-CAS system status information.

Viewing Installed Software

Use this procedure to display a list of all software currently installed on your Intuity system.

1. Log into the Intuity system using **sa**.
2. Begin at the Intuity Administration menu and select the following sequence.

```
> Customer/Service Administration
    > System Verification
        > View Installed Software
```

3. `cas Call Accounting System` appears in the abbreviated listings following the detailed listings of the system's primary software packages.
4. Use **PREVPAGE** (F2) and **NEXTPAGE** (F3) to page through the screens and **CANCEL** (F6) to return to the Intuity menu system.

Configuring and Using Alarms, Logs, and Diagnostics

9

This chapter describes functions used to detect and analyze trouble that occurs with the CAS application. It is organized into the following sections.

- *Stopping and Starting Call Processing*
- *Monitoring CDR Collection*
- *Rebuilding the CAS Call Record Database*
- *Using the HackerTracker Option*
- *Using CAS Alarms*
- *Using the Intuity SMDR Port Diagnostic*

Stopping and Starting Call Processing

You can stop and start the call costing process using the CAS application or the Intuity Customer/Services Administration windows. If stopped using an Intuity process, Intuity must restart it as well. When using the Intuity selection, call collection stops as well as costing.

NOTE:
Under most circumstances you should not start or stop call costing unless told to do so by a technician.

1. Select one of the following sequences.

   a. From the CAS main menu:

   > System Configuration Menu
   > Diagnostics & Monitoring Menu
   > Stop (or Start) Call Costing

   b. From the Intuity main menu:

   > Customer/Services Administration
   > System Management
   > System Control
   > Stop (or Start) Call Processing

   The same screen appears for both functions. A screen message informs you that costing stopped (or started).

```
--------------------------------------------------------------------------------
                                STOP CALL COSTING
--------------------------------------------------------------------------------
Call costing is running.

stopping call costing...

Call costing stopped.

Press <RETURN> to continue.
```

2. Press **ENTER** to end the procedure.

   The screen returns to a menu display.

Monitoring CDR Collection

Use this function in conjunction with the View Logs screen to monitor unprocessed call records received from the switch.

1. From the CAS main menu, select the following sequence.

> System Configuration Menu
>
> > Diagnostics & Monitoring Menu
> >
> > > Montior PBX/KTS SMDR

A screen similar to the one below appears.

```
COMMANDS: Query Next Previous Start Finish Exit
          Query for record
-------------------------------------------------------------------------------
                              MONITOR PBX/KTS SMDR
-------------------------------------------------------------------------------

          Site: LAB MT 2E-524

Notes:

Select a Site.

Press <S>tart to start monitoring SMDR output for this Site.
Press <F>inish to stop monitoring SMDR output for this Site.
```

2. Press **S** (start).

   CAS opens a file named SMDR_1 within 5 minutes of the next call received from the switch (subsequent calls append to the file until you disable the monitor, documented in step 7).

3. Press **E** (exit) to return to the System Configuration Menu. Wait until you are sure that there are calls in the file, then select View Logs.

   A screen similar to the one below appears on display.

```
-------------------------------------------------------------------------------
                                    VIEW LOGS
-------------------------------------------------------------------------------
  1 SMDR_1                10 install/site081194   18 options
  2 chkctrl.log           11 install/site081394   19 poller
  3 chkfe.log             12 install/software     20 reports
  4 chkpc.log             13 install/upd081194    21 reports.1
  5 dbwork                14 install/va081194     22 reports.2
  6 frontend              15 killfelog             P Print a log
  7 install/ht081194      16 monitor               D Delete a log
  8 install/pbx081194     17 monitor.log           E Previous Menu
  9 install/setup081194

Your View choice: _
```

4. Find SMDR_1 in the list and enter its menu number —for example, **1**.

The screen displays a listing of call records as they are received from the switch

```
09/06/90 14:40      3856440 00:01:30 800   22
09/06/90 14:43           IN 00:05:08 801   27
09/06/90 14:44      5551212 00:11:10 800   23
09/06/90 14:46           IN 00:00:52 803   22
```

5. To stop the viewing session, press **Q** (quit), **ENTER**, then **E** (exit) and **ENTER**.

   The screen returns to the System Configuration Menu.

6. Display the Monitor PBX/KTS SMDR screen again by selecting Diagnostics & Monitoring Menu, then, Monitor PBX/KTS SMDR.

7. To stop the monitoring session, press **F** (finish), then **E** (exit).

   The screen returns to a menu display; you may initiate another function or exit CAS.

Rebuilding the CAS Call Record Database

Occasionally a disk crash on the MAP processor, or some other unusual event corrupts the structure of the call record database. When this occurs, reported information is erroneous.

CAUTION:
You (the system administrator or some other system user) should not use this CAS capability unless AT&T support or technical personnel has requested you do so.

1. From the Intuity main menu:

> Customer/Services Administration
>
> > System Management
> >
> > > System Control
> > >
> > > > Rebuild CAS Call Records Database

The Rebuild CAS Records Database screen appears.

```
--------------------------------------------------------------------------------
                        Rebuild CAS Call Records Database
--------------------------------------------------------------------------------

 This process should take less than 1 minute to complete.

Confirm

Would you like to rebuild the CAS call records database ?

Strike ENTER when ready
or ESC to stop.
```

2. Press **ENTER** to continue. When the rebuilding process completes, press **ENTER** to return to the menu system.
3. To abort the process, press **ESC**, then **ENTER**. The screen returns to the menu system.

Using the HackerTracker Option

HackerTracker, an option to your call accounting software, is designed to help you stop fraudulent use of your telephone switch.

How does “switch fraud” happen? Switches with auto attendant, voice mail, or remote access lines are common targets of toll theft. One scenario is a hacker’s computer dialing into a switch and trying thousands of dial-out codes; codes that work are then used or sold. Like corporate secrets, there are many other ways to steal authorization codes — the unfortunate result is an astronomical phone bill for switch owners.

How Can HackerTracker Help?

- Stop the hacker. You can monitor facilities or authorization code usage, and receive alarms in time to shut down facilities before codes are broken.
- Reduce liabilities after a security breach. You can monitor long distance calls by the hour and detect abuse early enough to change codes and keep damages to a minimum.
- Give peace of mind. You can set up daily reports to keep you informed of the security of your switch.

The information that follows helps you understand how to set up HackerTracker to work with CAS and perform the functions described above. Other subsections describe: editing HackerTracker alarm criteria, HackerTracker reports, and how to generate HackerTracker tables.

HackerTracker is designed as an active and a passive tool for reporting suspicious call activity:

- Its active role consists of monitoring calls soon after the switch sends them to CAS and generating an alarm if one of the calls you are tracking trips the count or cost limit for its type. You can select up to 20 alarm criteria to track calls.

- Its passive role consists of generating four daily Selection Detail Reports for international, Caribbean, lengthy, and expensive calls and one weekly report for weekend calls. You can change selection criteria as future needs are defined.

What Criteria Should You Set For Alarms?

You can monitor calls by area code, call type, authorization code, and/or by facility. As you become familiar with your calling patterns, decide what calls to track (use the Area Code and City/State Summaries and the Trunk Group Busy Hour Reports to help you).

For example, if your switch uses authorization codes, track those that have been compromised or are susceptible to abuse. If you conduct little or no business on areas that appear on reports, monitor these area codes. If international calls are a problem, look for call type IDDD (see the tips shown later in this guide). If you have facilities dedicated to long-distance or remote access, track them.

Next, set hourly count and cost limits for calls matching the criteria during business and non-business hours and on weekends. Reaching either limit generates an alarm.

Upon an alarm, a message is sent to the system printer and to logs in CAS and the Intuity system software; VoiceAlarm is notified to place a message into a mail box.

To investigate an alarm condition, generate a Selection Detail Report for the past hour. Then, if necessary, administer the switch to change facility restriction levels or shut down its trunk group.

Editing HackerTracker Setup

Use the procedure that follows to change the criteria setup during installation for HackerTracker alarms.

1. From the CAS main menu select the following sequence:

```
> HackerTracker Menu
    > Set Alarm Criteria
```

A screen similar to the one that follows displays.

```
COMMANDS: Next Previous Update Exit
Update - <ESC> to save, ^C to cancel, <RETURN> for next field
-------------------------------------------------------------------------------
                                ALARM CRITERIA
-------------------------------------------------------------------------------
     Criteria Set          1

     Alarm For             E

     Facility              CO  ____

                     Maximum Call Count            Maximum Call Cost
                         per Hour                per Hour  (Dollars)
  Time
  Business Hours          200                          $    600
  Non-Business Hours       30                          $     50
  Non-Work Days            30                          $     50
Enter Business Cost.
```

2. Press **U** (update) to set values as in the list that follows. When complete, press **ESC**, then **E** (exit).

   a. Alarm For. The type of calls to track in the facility named below. Enter:

   - **A** (area code) for the area code indicated in the associated field.
   - **C** (call type) for the call type indicated in the associated field.
   - **Z** (authorization code) and the code indicated in the associated field. (Used only with switches that report authorization codes).
   - **E** (everything).
   - **N** (nothing — disables this criteria set).

   b. Facility. A facility from the Telephone System Configuration that you wish to monitor or a blank (all facilities).

   c. Maximum Call Count (and Cost) per Hour. Alarm-triggering limits (count = value in the range 0 to 9999; cost = and amount in the range 0 to 32000 dollars) for these time periods:

   - Business (and Non-business) Hours. The daily hours, Monday to Friday, defined by the Configure Business Hours screen.
   - Non-Work Days. The "week-end" days defined in the Configure Business Hours screen.

3. From the HackerTracker menu, select:

```
> Configure Business Hours
```

A screen similar to the following one displays.

```
COMMANDS: Update Exit
          Update the displayed record
--------------------------------------------------------------------------------
                          CONFIGURE BUSINESS HOURS
--------------------------------------------------------------------------------

                       Starting Time        Ending Time

             Business Hours: 08:00              18:00

         Non-Business Hours: 18:00              08:00


                          Define Work Days

     Sunday   Monday  Tuesday  Wednesday  Thursday  Friday  Saturday
       N        W        W        W         W        W        N
```

4. Press **U** (update) to enter the Starting Times of the `Business Hours` and `Non-Business Hours` fields as *hours:min*, in a 24-hour format. Enter the same time in both fields to set the entire day as business hours.

   In the Define Work Days portion of the screen, enter **W** (work) or **N** (nonwork) to identify the days to which the hours apply.

5. When complete, press **ESC**.
6. To end the procedure, press **E** (exit).

HackerTracker Reports

HackerTracker enhances the CAS Schedule Reports feature as follows:

- Five new reports with report codes (SR26 through SR30) are preset as Selection Reports with the default values in Table 1 (below).
- The additional reports bring the total Schedule Reports to 150, and the number of Selection Reports to 30.

Consult chapter 3, *Reports*, if you wish to change the schedule, selection criteria, and output for these new reports.

Table 9-1. HackerTracker Scheduled Reports

Schd. Rpt.#	Rpt. Code	Report Name	Freq.	Run Time	Selection Criteria
146	SR26	INTERNATIONAL	D	06:00	Call type = IDDD
CALLS	(daily)	AM	Date = today		
147	SR27	EXPENSIVE	D	06:15	Cost ³ $10.00
CALLS	(daily)	AM	Date = today		

Schd. Rpt.#	Rpt. Code	Report Name	Frequency	Run Time	Selection Criteria
148	SR28	LENGTHY	D	06:30	Duration ³ 0:30:00
CALLS	(daily)	AM	Date = today		
149	SR29	CARIBBEAN	D	06:45	Dial no. = 809%
CALLS	(daily)	AM	Date = today		
150	SR30	WEEKEND	W	07:00	Date = next
CALLS	(Mondays)	AM	Saturday and Sunday		

Reports are set to run by entering output method **A** (append) and the output device **report*n*.out** (where n = schedule report number). To retrieve these reports, use the View Reports function.

Date ranges remain unchanged until reports run; at that point, dates are moved ahead by the frequency (that is, one day or one week).

Accessing Alarm Messages

HackerTracker can store up to 500 messages in its alarm log files. These files are accessed and maintained very much like the CAS view logs and reports functions.

The log tracker contains the most recent alarm messages. Should the file grow larger than 50Kb, the system creates up to 3 file extensions (`tracker.1` to `tracker.3`) with newer data displacing older data into the next extension. The oldest data from `tracker.3` is written over.

1. From the CAS main menu, select the following sequence.

```
> HackerTracker Menu
    > View Alarm Messages
```

A screen similar to the one below appears on display.

```
-------------------------------------------------------------------------------
                              VIEW ALARM MESSAGES
-------------------------------------------------------------------------------

  P Print Alarms
  D Delete Alarms
  E Previous Menu

Your View choice:
```

2. To display the alarm messages contained in a log, enter the log's menu number. A sample alarm message appears below.

```
********WARNING**************      12-10-91  /  13:45

HACKER TRACKER Alarm Criteria 1
Maximum call count of 10 per hour exceeded for:
Facility: CO      Area Code: 809
Trigger Event:    Date: 11-9-92       Call Detail:
Start Duration Extn Trunk Region Dialed Digit Type  Auth Code Cost
Time   h:mm:ss                                              $
----- -------- ---- ----- ------ ------------ ----- --------- -----
22:34  1:24:30 6819 90123 CARIB  8096581234   OS-OL 458730209 25.20
```

3. To print a log's contents, enter **P**; to delete the entire log's contents, enter **D**.

   A screen similar to the one below appears on display.

```
--------------------------------------------------------------------------------
                                PRINT ALARM MESSAGES
--------------------------------------------------------------------------------

  E Previous Menu

Your Print choice: 1
```

4. To proceed with printing or deleting a log, enter its menu number and follow further screen instructions.

Printing HackerTracker Tables

Use the following procedure to print tables with the current HackerTracker database settings for:

- Alarm Criteria Information
- Business Hours Information

We recommend printing tables after database updates.

1. From the main menu select the following sequence.

   > HackerTracker Configuration Menu
   > HackerTracker Tables Menu
   > *either HackerTracker table*

   A screen similar to the one below appears on display.

```
COMMANDS: Update Generate Exit
          Update the displayed record
--------------------------------------------------------------------------------
                            ALARM CRITERIA INFORMATION
--------------------------------------------------------------------------------
         Output Method: T
         Output Device: Your Terminal
```

2. To change values, press **U** (update), enter values in the `Output Method` and `Device` fields, and press **ESC**. Typical values are:

   a. To display on the terminal, enter method **T**. A device is not required.

   b. To print, enter method **P**, then device **wide 570 | lp** (compressed) or **lp** (uncompressed).

   c. To save for later viewing (see *Viewing Reports* in chapter 8), use method **R** (redirect) or **A** (append) and device *filename* (where *filename* is up to 10 characters long).

3. Press **G** (generate).

   If you sent the report to the terminal, the screen displays it, one page at a time. Paginate using the arrow keys, **ENTER**, or **PageUp** and **PageDown** keys.

   The procedure is complete. The screen returns to a menu display; you may initiate another function or exit CAS.

Using CAS Alarms

CAS generates alarms connected with two features: HackerTracker and a resource monitor.

A triggered alarm causes several events to occur:

- The Intuity system software makes entries in one or more logs depending on the severity and resolution of the alarm. The *Intuity Platform Administration and Maintenance* manual for Release 2.0 contains detailed information on all of Intuity's alarms including the administrator's and maintenance alarms.
- CAS sends a recorded message (VoiceAlarm) to a mailbox you designate, customized for the type of alarm issued.
- CAS sends an alarm message for output on the printer.
- Continued monitoring of the alarm. If not resolved, more severe alarms are issued. In the case of a 90% capacity alarm, call collection halts until corrective action takes place (resulting in a loss of some call records).

The section that follows briefly describes the messages that appear in the Intuity logs.

CAS Messages That Appear in Intuity Logs

Intuity logs receive the CAS messages listed below:

Message/Log	Corrective Action
`CAS File System Inodes 70 pct used` (administrator's log) `CAS File System Inodes 80 pct used` (administrator's and alarm logs)	Use the Intuity Verify System Status feature (see chapter 8) to check that call processing is running and immediately inform AT&T of a potential problem.
`CAS File System Inodes 90 pct used` (administrator's and alarm logs)	Use the Intuity Verify System Status feature (see chapter 8) to check that call processing is running and immediately inform AT&T of a potential problem. Call collection stops to prevent a system failure. AT&T supplies instruction for further action.
`CAS File System Disk 70 pct full` (administrator's log) `CAS File System Disk 80 pct full` (administrator's and alarm logs)	Perform a backup (see chapter 8 for backup choices), then delete old call records to make room for new data.
`CAS File System Disk 90 pct full` (administrator's and alarm logs)	Perform a backup (see chapter 8 for backup choices), then delete old call records to make room for new data. Call collection stops to prevent a system failure. Contact AT&T immediately for further action.
`HackerTracker Phone Abuse or Fraud Alarm` (Administrator's Log)	HackerTracker has detected possible abuse or fraud based onyour criteria setup. (*See Using the HackerTracker Option* earlier in this chapter)

Editing Voice Alarm Parameters

This section discusses how to edit the Voice Alarm setup.

Use the following procedure to change the numbers of mailboxes, identified during installation, that receive voice alarms.

1. From the CAS main menu, select the following sequence:

> System Configuration Menu
> > Diagnostics & Monitoring Menu
> > > Voice Alarm Administration Menu
> > > > Administer Voice Alarm Mailboxes

A screen similar to thefollowing one displays.

```
Editing Voice Alarm Mailboxes - Wed Oct 19 15:20:42 EDT 199
 1 Voice Alarm Mailbox Administration   2 Administer Voice Alarm Mailboxes
 →Administer Voice Alarm Mailboxes
  Test Voice Alarms                     Notification Mailbox    0000
  Exit
                                        Warning Alarm Mailbox   0000
                                        Major Alarm Mailbox     0000
```

2. Enter the mailbox number to receive the alarms described below:
   - Notification— an alarm sent at 70% disk or i-node utilization
   - Warning — an alarm sent at 80% disk or i-node utilization
   - Major — an alarm sent at 90% disk or i-node utilization or when HackerTracker alarm criteria is met.
3. Press **CANCEL** (F6) to return to the menu system without saving your entries, or **SAVE** (F3) to maintain your entries and return to the menu system.

NOTE:
I-nodes are part of the file structure that store operating system administrative information.

Testing Alarm Setup

After making changes, test the alarm setup using the following procedure:

1. From the CAS main menu, select the following sequence:

> System Configuration Menu
> > Diagnostics & Monitoring Menu
> > > Voice Alarm Administration Menu
> > > > Test Voice Alarms

A screen similar to the one below displays.

```
     Editing Voice Alarm Mailboxes - Wed Oct 19 15:20:42 EDT 199
 1 Voice Alarm Mailbox Administration
 Administer Voice Alarm Mailboxes
→Test Voice Alarms
 Exit

 2            Test Voice Alarms

 Voice Alarm ID

 Voice Alarm level
```

2. Press **CHOICES** (F2) to select a Voice Alarm ID from the following list.
   - Notification— Disk 70% Used
   - Notification— I-nodes 70% Used
   - Warning Alarm— Disk 80% Used
   - Warning Alarm— I-nodes 80% Used
   - Major Alarm— Disk 90% Used
   - Major Alarm— I-nodes 90% Used
   - Major Alarm— HackerTracker Alarm— Phone Abuse or Fraud
3. Press **ENTER** and enter from the following list, the Voice Alarm Level you wish to receive the test call:
   - Level one — sends the selected alarm to the notification alarm mailbox.
   - Level two — sends the selected alarm to the notification and warning mailboxes.
   - Level three — sends the selected alarm to all alarm mailboxes.
4. Press **CANCEL** to abort the test and return to the menu system, or press **SAVE** to begin the test and return to the menu system.

Viewing the Intuity Alarm Log

From the Intuity platform, you can view CAS resource alarm messages by displaying the Intuity system software's alarm log. This log contains two types of entries: active and resolved alarms. The system may correct the problem indicated by an active alarm or the alarm may indicate corrective action (for example, deleting some call records if a disk capacity alarm appears). When addressed, an alarm's status changes to resolved.

Use the following procedure to display Intuity Alarm Log messages pertaining to CAS.

1. From the Intuity main menu select the following sequence.

> Customer/Services Administration

> Log Administration

> Alarm Log

A screen similar to the one below appears.

```
Customer/Services Administration                    Log Administration
Alarm Management                                    Administrator's Log
                    Alarm Log Display Selection

                              Alarm Log

  The following options control which alarms will be displayed.

      Alarm Type: A

     Alarm Level:
           Major? Y              Minor? Y                Warning? Y

      Start Date: 08/04/94         Time:   :            Application: CA

    Resource Type:              Location:               Alarm Code:

Type in Application or press CHOICES.

1 HELP  2CHOICES  3 SAVE  4PREV-FRM 5NEXT-FRM 6 CANCEL  7        8CHG-KEYS
```

2. Enter criteria (described below) defining the logged messages you wish to view and press **SAVE** (F3).

   a. Alarm Type. **A** (active) or **R** (resolved) alarms.

   b. Alarm Level. **Y** (yes) or **N** (no) for Major, Minor, and or Warning levels.

   c. Start Date. The date of the oldest alarm message you wish to view.

   d. Time. The time of the earliest alarm message on the date specified.

   e. Application. **CA**.

   NOTE:
   For descriptions of other fields see the *Logs* chapter in your *Intuity Platform Administration and Maintenance* manual.

The log appears. Use **PREVPAGE** (F2) and **NEXTPAGE** (F3) to view the log. When finished, press **CANCEL** (F6) to return to the menu system.

Using the Intuity SMDR Port Diagnostic

Use this procedure after making adjustments in the MAP processor's serial port or your switch's SMDR port settings, to confirm that they agree.

1. From the CAS main menu, select the following sequence:

   > Customer/Services Administration
   >Diagnostics
   >Call Accounting Port Diagnostics

   The Record Collection Diagnostics screen displays a message with the SMDR port's status as `Enabled` or `Disabled`. If disabled, you must enable it as described in chapter 6, *Editing CDR Port Information*.

   If enabled, the screen displays the message `Please wait 30 seconds,` then waits to display the next 5 call records received from the switch.

2. Review the records to see if they contain ascii characters or unintelligible symbols ("garbage").

   If the records appear normal, the SMDR port settings of the switch and MAP processor agree.

   If within the time period no data appears, CAS displays the message `Currently no new data available. Would you like to wait?` To gain another 30 seconds for SMDR display, confirm with **Y** (yes). You may wish to make a few test calls and see if they show on the screen.

   If the `Currently no new data available.` message displays again, check the hardware connection to the SMDR port, the switch SMDR setting, and the call record format selected in CAS, and review the SMDR again.

3. Press **ENTER** to return to the menu system

CAS Menu System

A

This appendix shows the complete CAS menu system.

- REPORTS
  - ANI/Demographics Reports Menu
    - Generate Area Code Summary By ANI for Infoming Calls
    - Generate Area Code Summary Report for Outgoing Calls
    - Generate City-State Summary Report for Incoming Calls
    - Generate City/State Summary Report for Outgoing Calls
    - Generate Abandoned Call Selection Report
  - Generate Selection Report
  - Organization Reports
    - Generate Organization Detail Report
    - Generate Department Summary Report
    - Generate Cost Center Summary Report
    - Generate Extension Summary Report
    - Generate All Summary Reports
  - Account Code Reports Menu
    - Generate Account Code Detail Report
    - Generate Account Code Summary Report
  - CDR Analysis Reports Menu
    - Generate Busy Day Trunk Utilization Report
    - Generate Call Type Report
    - Generate Duration Report
    - Generate Time of Day Report
    - Generate Trunk Group Report
    - Generate Date Report
    - Generate Trunk Group Busy Hour Report
    - Generate All CDR Analysis Reports
    - Generate Site Report
  - Schedule Reports

- SITE CONFIGURATION
  - Edit Site Information
  - Edit Telephone System Configuration
  - Edit Account Code Table
  - Change Account Code in Call Record
  - Install a Site
  - Site Tables Menu
    - List Site Information
    - List Telephone System Configuration
    - List Account Code Table
- ORGANIZATION CONFIGURATION
  - Edit Company Information
  - Edit Organization Table
  - Load Organization Table
  - Move Cost Center Between Departments
  - Move Extension Between Cost Centers
  - Move Personnel Between Extensions
  - Directory Tables Menu
    - List Departments
    - List Cost Centers
    - List Personnel
    - List All Directory Tables
  - Organization Tables Menu
    - List Company Information
    - List Organization Table
    - List All Organization Tables
- CDR COLLECTION CONFIGURATION
  - Edit CDR Collection Information
  - Edit CDR Port Information
  - CDR Configuration Tables Menu
    - List CDR Collection Information
    - List CDR Port Information

- COSTING CONFIGURATION
  - Edit Carrier Information
  - Edit Cost Adjustments
  - Edit Holiday Table
  - Edit Dialed Digit Processing Table
  - Edit Rate Tables
  - Costing Tables Menu
    - List Carrier Information
    - List Cost Adjustments
    - List Holiday Table
    - List Dialed Digit Processing Table
    - List All Costing Tables
- SYSTEM CONFIGURATION
  - Delete Call Records
  - Edit Call Reporting Configuration
  - View Reports
  - View Logs
  - Change Passwords
  - Diagnostics & Monitoring Menu
    - Start Call Costing
    - Stop Call Costing
    - Monitor PBX/KTS SMDR
    - Check System
    - Backup CAS Data
    - Restore CAS Data
  - Install PBX/KTS Interfaces
  - Install Updates
  - System Tables Menu
    - List Call Reporting Configuration
    - List Selection Reports
    - List Scheduled Reports
    - List Organization Selection Reports
    - List All System Tables
- HackerTracker Configuration Menu
  - Set Alarm Criteria
  - Configure Business Hours
  - View Alarm Message
  - HackerTracker Tables Menu
    - List Alarm Criteria Information
    - List Business Hours Information

Installing CAS

B

Most Intuity CAS software installations are performed before the system arrives at your site. At the assembly location, technicians follow the procedure documented in the *Intuity Software Installation* manual (585-310-140) to load CAS via tape.

After your system is delivered, a technician performs the physical integration of your company's switch and the MAP processor. Intuity CAS software (on 5 disks) is part of the CAS material the installer leaves with you, in case you need to reload it. The process documented here, describes software installation using these disks.

This appendix is organized as follows:

- *Verifying Installed CAS Software*
- *Connecting the MAP Processor to Your Switch*
- *Required Software Installation Materials*
- *Loading Basic CAS Software and Executing the Startup Process*
- *Verifying Your Switch's Call Record Format*
- *Verify SMDR Is Turned On for Trunk Group(s) (System 75 and DEFINITY Switches Only)*
- *Installing Rate Tables and Setting Up a Site*
- *Creating the Organization Table*
- *Installing and Setting Up the HackerTracker™ Option*
- *Installing and Setting Up CAS Alarm Notification*
- *Customizing Your System*
- *Testing Your Installation*
- *Backing Up CAS Databases*

Verifying Installed CAS Software

Log in to the Intuity system using **sa**. Display the Intuity main menu.

```
  INTUITY (TM) Administration
 AVDIX Administration
>Call Accounting System
 Customer/Services Administration
 Networking Administration
 Switch Administration
 Switch Interface Administration
 Voice System Administration
```

If it includes Call Accounting System, see chapter 1 of this document, *Getting Started*, to determine its level of implementation and follow the appropriate procedure in this appendix. If not, continue with the procedures in the remaining sections of this appendix to install CAS.

Connecting the MAP Processor to Your Switch

The MAP processor communicates with your switch through a dedicated RS232 serial port. The following sections describe the equipment and process used to connect the MAP processor with the switches Intuity supports.

Connecting the MAP Processor to a MERLIN LEGEND Switch

When the system connects to a MERLIN LEGEND switch, the port CAS selects on the MAP processor is based on the guidelines listed below:

- SPM is always present and using *tty00*.
- if RMB or a remote access modem is not present, CAS uses *tty01*.
- If RMB or a remote access modem is present, CAS uses *ttysaa* — located on an Equinox 8-port serial board added to the processor

Connecting An Intuity MAP Processor and a MERLIN LEGEND Switch Less Than 50 Feet Apart

The equipment and configuration in this section apply when the following conditions listed below exist. The type of port you connect to on the MAP processor determines which configuration you use.

- The MERLIN LEGEND switch and the MAP processor reside within 50 feet of each other.
- They share the same power outlet.

The table following the figures lists items required for this configuration. Item numbers in the table refer to the figure.

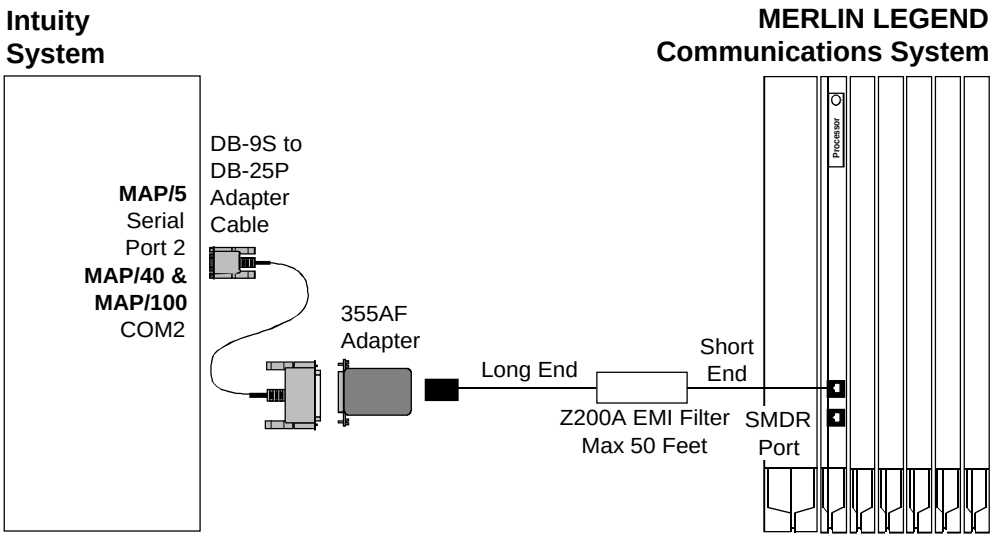

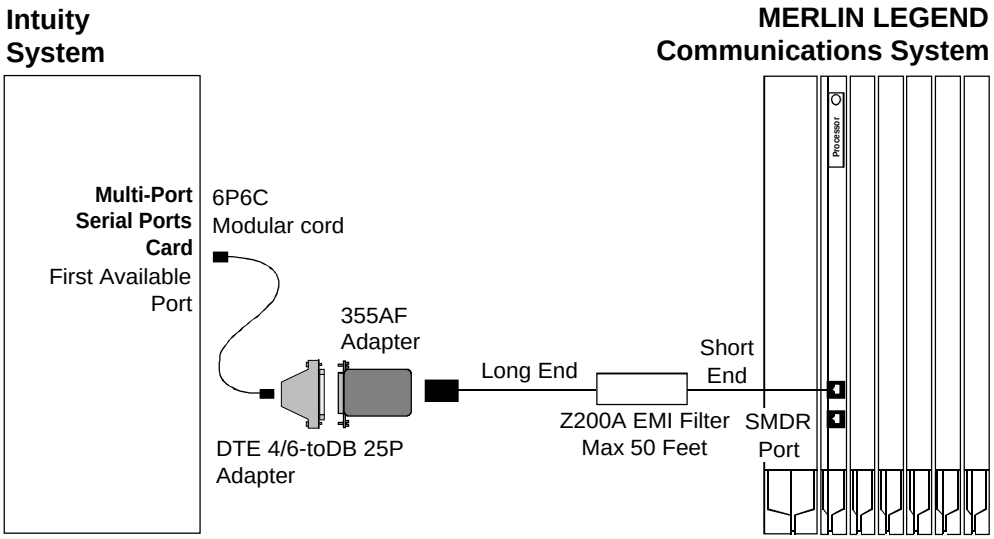

Figure B-1. Connection of Intuity System and Merlin Legend, Within 50 Feet, Same Power Outlet

Item	COMCODE
DB-9S to BD-25P adapter	406708503
D8W-87 modular cord	103786828
355AF adapter	105012637
Z200A EMI Filter	103965208

Connecting An Intuity MAP Processor and a MERLIN LEGEND Switch Over 50 Feet Apart

Use the equipment in this section apply when one or both of the following conditions exist:

- The MERLIN LEGEND switch and the MAP processor reside over 50 feet apart.
- They use different power outlets.

The table following the figures lists items required for this configuration. Item numbers in the table refer to the figure.

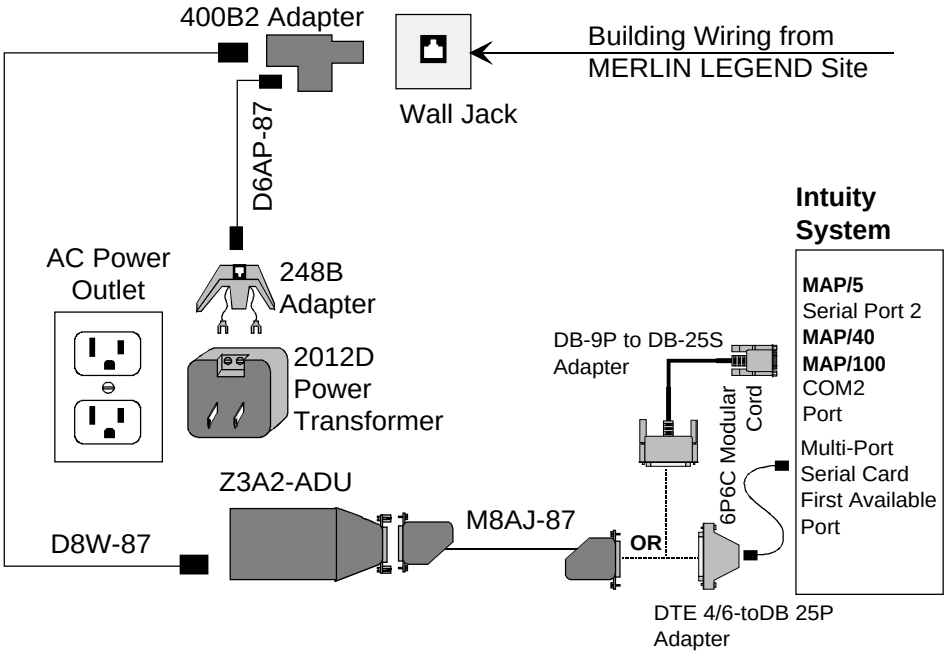

MERLIN LEGEND
Communications System

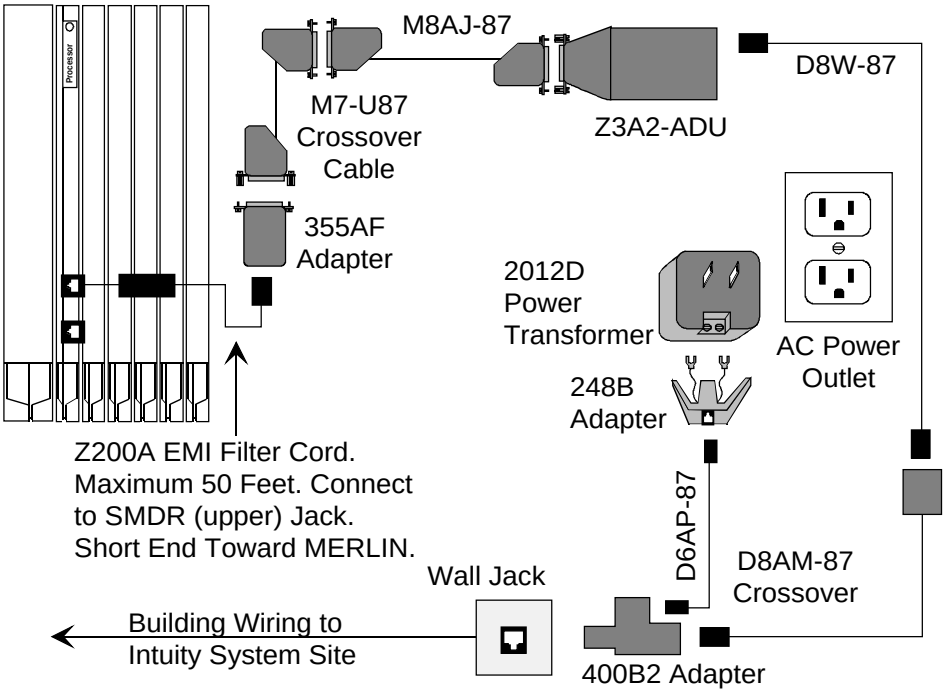

Number	Item	COMCODE
1	DB-9S to BD-25P adapter*	406708503
2	6P6C modular cord**	102937604
3	DTE4/6 to DB25P adapter**	407050095
4	M8AJ-87 cross-over cord	105388474
5	D8W-87 modular cord	103786828
6	400B2 adapter	104152558
7	D6AP-87 modular cord	102937620
8	248B adapter	102892113
9	2012D power transformer	102599354
10	D8AM-87 crossover cable	104154414
11	Z3A2-ADU	103963917
12	M7-U87 crossover cable	104246616
13	355AF adapter	103012645

* If used, items 2 and 3 not required.
** If used, item 1 not required.

Connecting the MAP Processor to a DEFINITY G1 or G3, or a System 75 Switch

Choose one of the methods listed below to connect the MAP processor's SMDR port and a DEFINITY G1, G3, or System 75 switch. The method used depends on the availability of a DCE port on the switch, the distance between your switch and the MAP processor, or the availability of circuit packs installed in the switch.

System 75 XE, DEFINITY G1, G3i, and G3s, and G3vs switches have DCE ports and can use any of the connection methods described below, based on other criteria. System 75 R1V3 and DEFINITY G3r switches do not have DCE ports and can only use circuit pack connections.

- The simplest direct connection using the switch DCE port requires locating the MAP processor less than 1000 feet from the switch.
- Connection from the switch DCE port to a MAP processor located from 1000-7000 feet away requires the use of ADUs.
- Connection to a switch distanced 5000-7000 feet from the MAP processor and lacking the availability or use of the DCE port requires a TN726 circuit pack.
- Connection to a switch distanced less than 5000 feet from the MAP process and lacking the availability or use of the DCE port requires a TN-754 circuit pack, and a digital modem (7400A).

The recommended transmission speed of 4800 bits per second indicates the distance limitations noted above. Lower transmission speeds may allow longer distances but with the danger of data overrun. Higher speeds have more limited distance.

Using the Switch's DCE Port to Connect to a Intuity MAP Processor Within 1000 Feet

The equipment and procedure in this section apply when the following conditions exist:

- Your system includes a System 75 XE or DEFINITY G1, G3i, G3s, or G3vs switch with an available DCE port, and
- The two components reside no more than 1000 feet apart.

The table following the figure lists the items required for this configuration. Item numbers in the table refer to the figure.

NOTE:
Inside wire must meet SYSTIMAX® PDS specifications.

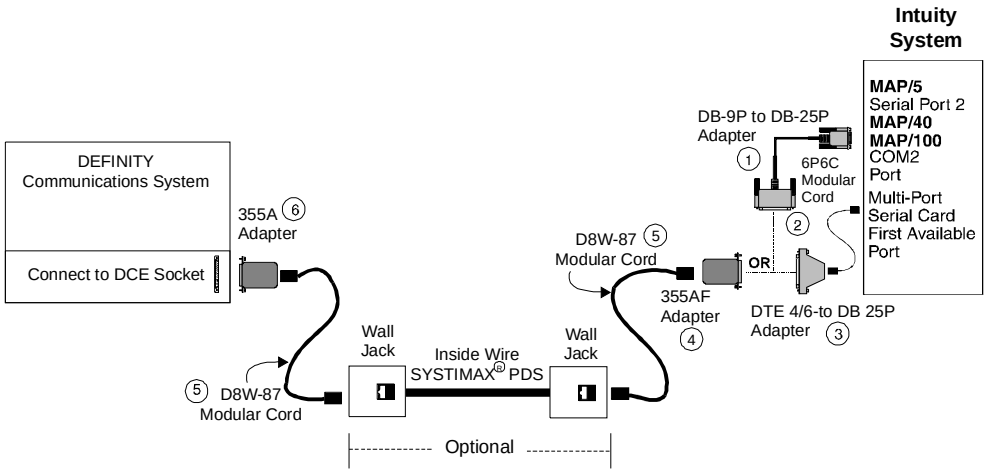

Figure B-3. Connection of Intuity System and System 75 or DEFINITY G1/G3, Within 1000 Feet, Using Switch DCE Port

Number	Item	COMCODE
1*	DB-9S to BD-25P adapter	406708503
2**	6P6C modular cord	102937604
3**	DTE 4/6 to DP25P adapter	407050095
4	355AF adapter	105012637
5	D8W-87 modular cord	103786828
6	355A adapter	103012645

* If used, items 2 and 3 not required.
** If used, item 1 not required.

Using the Switch's DCE Port to Connect to a Intuity MAP Processor Within 7000 Feet

The equipment and procedure in this section apply when the following conditions exist:

- Your system includes a System 75 XE or DEFINITY G1, G3i, G3s, or G3vs switch with an available DCE port, and
- The two components reside more than 1000 feet apart but within 7000 feet.

The table following the figure lists the items required for this configuration. Item numbers in the table refer to the figure.

NOTE:
Inside wire must meet SYSTIMAX® PDS specifications.

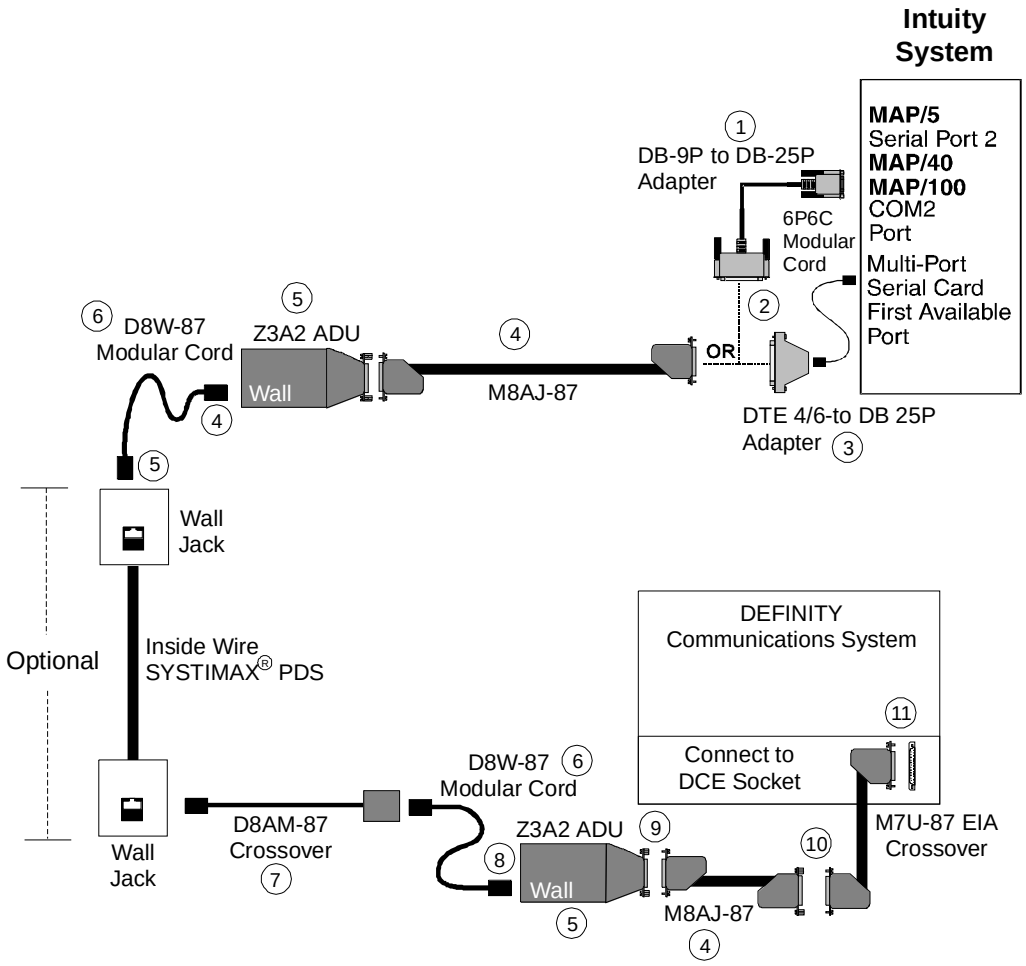

Figure B-4. Connection Using a Switch's DCE Port to an Intuity MAP Processor Within 7000 Feet

Number	Item	COMCODE
1*	DB-9S to BD-25P adapter	406708503
2**	6P6C modular cord	102937604
3	DTE 4/6 to DP25P adapter	407050095
4	M8AJ-87 cable	103963917
5	Z3A2 ADU	103963917
6	D8W-87 modular cord	103786828
7	D8AM-87 modular crossover cable	104154414
8	M7U-87 EIA crossover cable	104246616

* If used, items 2 and 3 not required.
** If used, item 1 not required.

Using a TN-726 Circuit Pack to Connect an Intuity MAP Processor and a Switch Within 7000 Feet

The equipment and procedure in this section apply when the following conditions exist:

- Availability of a data line port on a TN-726 circuit pack (used primarily with System 75 R1V3 and DEFINITY G3r switches, or System 75 XE or DEFINITY G1, G3i, G3s, and G3vs switches with no available DCE port)
- The two components reside up to 7000 feet apart.

The table following the figure lists the items required for this configuration. Item numbers in the table refer to the figure.

NOTE:
Inside wire must meet SYSTIMAX® PDS specifications.

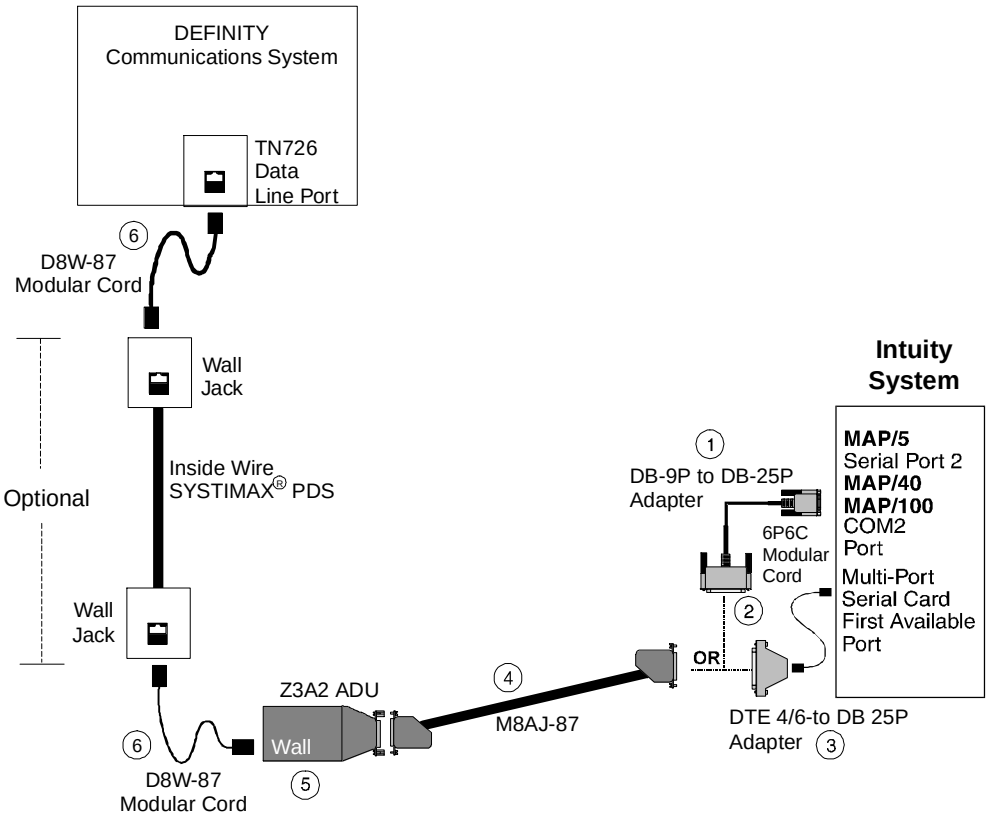

Figure B-5. Connection of an Intuity MAP Processor and a Switch Within 7000 Feet Using a TN726 Circuit Pack

Number	Item	COMCODE
1*	DB-9S to BD-25P adapter	406708503
2**	6P6C modular cord	102937604
3**	DTE 4/6 to DP25P adapter	407050095
4	M8AJ-87 cable	103963917
5	Z3A2 ADU	103963917
6	D8W-87 modular cord	103786828

* If used, items 2 and 3 not required.
** If used, item 1 not required.

Using a TN-754 Circuit Pack to Connect an Intuity MAP Processor and a Switch Within 5000 Feet

The equipment and procedure in this section apply when the following conditions exist:

- Availability of a digital line port on a TN-754 circuit pack (used primarily with System 75 R1V3 and DEFINITY G3r switches, or System 75 XE or DEFINITY G1, G3i, G3s, and G3vs switches with no available DCE port).
- The two components reside up to 5000 feet apart.

The table following the figure lists the items required for this configuration. Item numbers in the table refer to the figure.

NOTE:
Inside wire must meet SYSTIMAX® PDS specifications.

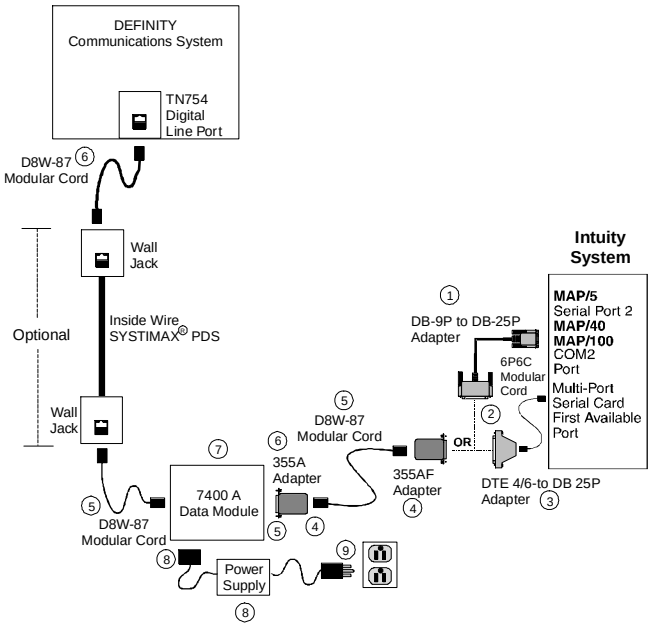

Figure B-6. Connection of an Intuity MAP Processor and a Switch Within 5000 Feet Using a Circuit Pack

Number	Item	COMCODE
1*	DB-9P to BD-25P adapter	406708503
2**	6P6C modular cord	102937604
3**	DTE 4/6 to DP25P adapter	407050095
4	355AF adapter	103012645
5	D8W-87 modular cord	103786828
6	355A adapter	105012637
7	7400A data modem	105558050
8	power supply	405509852

* If used, items 2 and 3 not required.
** If used, item 1 not required.

Required Software Installation Materials

You need the materials listed below to perform a complete installation.

Shipped with the Intuity system:

- connectivity equipment (see detailed sections that follow)
- Intuity CAS Software disks (5) — containing the basic software
- PBX Interface disk (1) — containing the CAS switch interfaces
- zero-based rating disk (1) — to enable site installation and call collection (discard after you receive custom rating disk)
- city/state names update disk (included to update software if changes occurred after its release)
- voice alarm disk (1) — upgrades the CAS software and enables CAS resource and HackerTracker (if part of the system) alarms

Shipped separately:

- custom rating disk (1) — to update the zero-based rating disk and allow call costing customized for the customer site
- HackerTracker disk (1) — to add this security option to CAS (see chapter 9, *Using the HackerTracker Option*)

Supplied by you (the customer):

- disks with ASCII files of organization information — if loading organization table (see chapter 5, *Loading the Organization Table*)
- completed worksheets (see chapter 2)

Loading Basic CAS Software and Executing the Startup Process

You may want to review chapter 1, *CAS User Interface*, before beginning this procedure.

Login on the Intuity system using sa. If you display the Intuity main menu and Call Accounting System is not included, use the steps below to load the CAS software.

CAUTION:
Loading each disk takes several minutes. Wait till the Intuity system prompts you before removing the CAS software disk to load the next one. Do not remove a disk during the loading process.

1. Select the following sequence:

   > Customer/Services Administration
   > System Management
   >UNIX Management
   >Software Install

2. Press **F** (floppy disk) to identify the installation media, then **ENTER**. The screen displays the message `Insert diskette into floppy drive 1. Type {go} when ready, or [q] to quit` Follow the screen instructions, insert CAS software disk 1 and press **ENTER**. The Intuity system reads the disk to determine the application being installed. When prompted to select a package or "all" for installation processing, press **ENTER** (all) to begin the loading process. The screen scrolls, displaying data as it loads off disk 1 (and each of the other 4 disks).
3. When prompted that loading is complete for disk 1, remove it, insert disk 2 and press **ENTER**. Repeat this step to load software disks 3, 4, and 5.

   After loading disk 5, the screen displays the message `Installation of Call Accounting System (cas)was successful`.
4. When the screen displays a prompt to insert a floppy disk again, remove the CAS software disk 5, press **Q** (quit), then **ENTER**.
5. Press **CANCEL** (F6) until the Intuity main menu displays. Press **CANCEL** again to return to the login prompt.

6. Login again using sa. Enter your terminal type (default = A386) and press **ENTER**.

The Intuity main menu now includes `Call Accounting System`. Use the procedure below to initiate the startup process, the main CAS menu does not appear until this process completes.

NOTE:
Part of the startup process includes verifying or changing the switch's port selected for connection to the MAP processor. If you have questions or are not familiar with this aspect of the CAS installation, see *Connecting the MAP Processor to Your Switch* earlier in this appendix. If you did not perform the connection yourself, confer with the technician responsible, to verify that the port entered on the *Required Switch Information Worksheet* is correct.

1. From the Intuity main menu select:

```
> Call Accounting System
```

2. Read the screen instructions and press **ENTER** when complete, to proceed through a short start-up process.
3. The Edit Company Information screen displays. Press **U** (update) and enter your company's name. Press **ESC** to save your entry or **CTRL-C** to cancel it. When complete, press **E** (exit).

   NOTE:
   If you do not wish to enter information at this time, press **E** (exit) to continue through the startup process and finally display the Intuity main menu. If you do so, you need to enter your company name, select a PBX/KTS interface, and verify/change your port name from CAS. See chapter 8 *Updating CAS Software*, chapter 5, *Editing Company Information*; and chapter 6 *Editing CDR Port Information* for complete instructions.

4. The screen prompts you to insert the PBX/KTS Interface disk. Insert the PBX/KTS Interface disk to load all SMDR data interpreters used by Intuity CAS and make call record format selections available during site installation. Press **ENTER** to continue. Follow the screen instructions. When prompted, remove the interface disk and press **ENTER** to continue.

   The Edit CDR Port Information screen displays.

5. Consult your *Switch Information Worksheet*. If the port used to connect the MAP processor and the switch (noted on the form) is different from that displayed in the `Port Name` field, press **U** (update), then **Ctrl-W** to display a list of available ports. Write down the name of the port you wish to use, then press **ENTER**.
6. Enter the name (for example, `ttysaa`) you noted in the `Port Name` field and press **ESC** to save your entry. When complete, press **ENTER**.
7. If included with the software disks, follow the screen instructions to load the city/state disk. When complete, remove the disk from the drive and follow the instructions to display CAS's main menu.

Verifying Your Switch's Call Record Format

Completing the CDR Collection Configuration screen is part of installing a site. The configuration includes the format of call records that CAS receives from the switch. Use the procedures in the following sections to verify that the format entered on your *Call Record Collection Configuration Worksheet* matches the format programmed on your switch. If they do not match, enter the format listed on your worksheet in the field provided.

NOTE:
Initiate these procedures from one of the following:

- the Intuity system using the SPM switch administration application (MERLIN LEGEND only)
- an MLX20L console, programmed for switch administration (MERLIN LEGEND only)
- an SAT switch administration terminal (DEFINITY or System 75 switches only)

Verifying MERLIN LEGEND Call Record Formats

1. Locate your *Call Record Collection Configuration Worksheet*.
2. If using:
   - SPM, press **ENTER** to display the main menu.
   - MLX press **M** (menu) to display the main menu.
3. Select the following sequence:

```
>Sys Program
  >Exit
    >Options
      >S MDR
        > Format
```

4. The display shows the format choices:
   - `Basic SMDR` (corresponds to CAS's *legendbase* or *legendspcl* call record formats)
   - `ISDN SMDR` (corresponds to CAS's *legendisdn* or *legendspcl* call record formats)
5. If the format matches the one on your worksheet, press **E** (exit) to return to the previous menu. To change the selected format, press the button next to the desired format. Press **ENTER** to save your selection.
6. The previous menu displays. Select:

   ```
   > Call Length
   ```

   Displayed instructions ask you to enter the minimum call time (0-255 seconds). We recommend a value of 5. Change it if you wish, then press **ENTER**.
7. The previous menu displays. Select:

   ```
   > Call Report Type
   ```

   The display shows the following choices:
   - `in/out`
   - `out only`

   We recommend you select in/out. Change it if you wish, then press **ENTER**.
8. Press **HOME** to leave the system programming mode.

Verifying System 75 and DEFINITY G1 and G3 Call Record Formats

This procedure is typical, but the details may vary between models of the above referenced switches. Consult your switch's documentation before beginning.

In addition to verifying agreement between the switch and CAS call record format settings, this procedure includes port setting and switch/MAP processor connection checks.

1. Locate your *Call Record Collection Configuration Worksheet*.
2. If the SAT is logged in, type logoff on the command line and press **ENTER**.
3. At the `login:` prompt, type sa and press **ENTER**. Then, enter the password and press **ENTER** again.
4. At the prompt, enter the terminal type and press **ENTER**. The terminal type is usually printed on the lower edge of the display's frame. If you cannot identify the terminal type, press **ENTER** to accept the default.

   The copyright screen displays.
5. At the command line, type change `system-parameters features`, then press **ENTER**.

   NOTE:
   Consult your switch's manuals for the exact wording needed to access the switch CDR parameters. For example, you may need to type change `system-parameters cdr`.

   The first page of parameters displays.
6. Press **NEXT** or **PGDN** until the `Feature-Related System Parameters` page (also called `CDR System Parameters`) displays (usually the second page).
7. Check the field `ISDN Layouts?/ISDN?:`
   - With a y value in the ISDN Layouts?/ISDN? field, the `Primary Output Layout:/Primary Output Format:` field must contain expanded or unformatted.
     i. expanded corresponds to CAS's call record format g1g3-f24w.
     ii. unformatted corresponds to CAS's call record format g1g3-u24W.

NOTE:
We recommend you use the entries `ISDN Layouts: y`, and `Primary Output Layout: unformatted` (or equivalent for your switch), if possible. You do not need to have ISDN to do so.

- With an n value in the `ISDN Layouts?/ISDN?` field, the `Primary Output Layout:/Primary Output Format:` field must contain `cdru/lsu`, and the `SMDR Account Code Length:` field must contain a value in the range 1-15.

  CAS's call record formats correspond to the values listed below:

  iii. 5 or less = the `g1g3-lsu5` format

  iv. 6-12 = the `g1g3-lsu12` format

  v. 13 or 14 = the `g1g3-lsu14` format

  vi. 15 = the `g1g3-lsu15` format

8. Compare the format listed here with the one on the Call Record Collection Information worksheet. If a difference exists, change your worksheet to match this SMDR setting.

   Other combinations of entries in these fields are invalid.

   NOTE:
   Authorization codes do not get reported in records where an account code is greater than 5 characters.

9. The field `Primary Output Destination/Primary Output Ext` should contain `eia` or the extension number of a digital or data line port.

   - `eia` in this field means your switch-to-MAP-processor connection uses the RS232 DCE serial port on your switch, as pictured in figures B-3 and B-4.
   - An extension number in this field means your switch-to-MAP-processor connection uses a switch extension to complete a connection that includes a circuit pack. as pictured in figures B-5 and B-6.

   If the entry does not match the connection used for this installation, change it. Press **ENTER** to save your change.

10. Confirm that the field `Secondary Output Layout` contains a blank.

11. If necessary, change the value in the `EIA Device Bit Rate` field to `4800`. Press **ENTER** to save your change.

12. When complete, type **`logoff`** on the command line and press **ENTER**.

Verify SMDR Is Turned On for Trunk Group(s) (System 75 and DEFINITY Switches Only)

The trunk group(s) that the Intuity CAS measures must have SMDR/CDR measurement enabled. To verify that SMDR is enabled, do the following:

1. Log into the SAT with the **craft** login.
2. At the command line, type **list trunk-group** and press **ENTER**.
   a. The Trunk Groups screen appears, listing by number each trunk group in the system.
   b. For each trunk group that CAS should measure, check the SMDR? field (for System 75, G1, and G3i switches) or the CDR? field (for G3r switches). The field should contain a **Y** (yes).
   c. If a trunk group does not have SMDR/CDR turned on, type **change trunk-group number** at the command line and press **ENTER**.
      i. The Trunk Group screen appears for the specified trunk group.
   d. Move the cursor to the SMDR Reports field (for System 75, G1, and G3i switches) or the CDR Reports field (for G3r switches).
   e. Type **Y** and press **ENTER**.
      i. The change is saved so the specified trunk group will be measured by CAS. The cursor returns to the command line.
   f. Repeat steps 3, 4, and 5 for each trunk group that needs to have SMDR measurement turned on.

NOTE:
Save Translations should be run on the switch within the next 24 hours to be sure the SMDR/CDR administration is not lost.

Installing Rating Tables and Setting Up a Site

You create a CAS site by loading the rate tables for its local calling area and then following an installation program that sets up a basic configuration.

Rate tables are contained in zero-based rating disks shipped with the software package. (Customized system update rates generally ship separately following an installation.)

The installation program is automatically activated after loading the rate tables. It will walk you through a series of screens to enter information from the following planning worksheets:

- Site Information
- Telephone System Configuration
- Dialed Digit Processing
- CDR Collection Configuration

CAUTION:
Should you skip any of the screens used to enter the above information or exit the screen series, you may return to them after the installation program completes. Simply access that particular screen from the CAS main menu and follow the instructions under the appropriate section in this chapter. Appendix A contains a menu tree outline of all CAS screens.

Loading the Rate Tables

Use this procedure for an initial site installation. To update rating tables see *Updating CAS Software* in chapter 8.

1. From the CAS main menu, select the following sequence:

   > Site Configuration Menu
   > Install a Site

   The screen displays:

```
--------------------------------------------------------------------------------
                          INSTALL SITE - STOP COSTING
--------------------------------------------------------------------------------
Call costing is running.

stopping call costing...

Call costing stopped.

Press <RETURN> to continue. ▌
```

2. Press **ENTER**. The Install Site screen displays the message `Ready to read in site software from media. Note: Only one site can be installed at a time`.
3. Follow the screen instructions to select a drive (if necessary), insert the rating disk (generally zero-based), and press **ENTER**.

   The screen displays dummy numbers from the zero-based rating disk and prompts you to confirm the installation.
4. When complete, remove the disk from the drive and press **ENTER** to continue.

5. When prompted, press **ENTER** again to display the Edit Site Information screen.
6. Proceed to the next section.

Entering Site Information

1. When a screen similar to the sample below appears on display, retrieve the Site Information worksheet.

```
COMMANDS: Query Next Previous Update Exit
          Find next record
--------------------------------------------------------------------------------
                              EDIT SITE INFORMATION
--------------------------------------------------------------------------------

             Site Name: LAB MT 2E-524
           Site Number: 1
        Site Area Code: 908
         Site Exchange: 957
          Site Address: 200 laurel
             Site City: middletown
            Site State: nj
         Site Zip Code: 07748
   Site Contact Person: kas
   Site Contact Number: 1066

                              Date          Order Number
                          ----------------  ------------
          Installation: 13:36 Aug 11 1994   M48020-002
           Last Update: 13:36 Aug 11 1994   NEVER


At end of list
```

NOTE:
The `Site Number`, `Area Code`, Exchange, and `Date` and the `Order Number` for the `Installation` and `Last Update` fields are non-editable values associated with the rating tables.

2. Press **U** (update).
   a. In the `Site Name` field, enter the site name from the worksheet.

      The cursor moves to the next field.

   b. In a similar fashion, enter the address, city, state, zip code, contact person, and contact number. From the last field, the cursor moves back to the first field.

   c. Check your entries. If incorrect, press **ENTER** to move the cursor to the appropriate field and re-enter it.

      NOTE:
      As you write over a field, make certain the cursor is placed at the end of your entry before pressing **ENTER**.

   d. When complete, press **ESC** to save this information.
3. Press **E** (exit). The Edit Telephone System Configuration screen appears on display. Proceed to the next section.

Entering the Telephone System Configuration

1. When a screen similar to the sample below displays, retrieve the *Telephone System Configuration Worksheet*.

```
COMMANDS: Query Next Previous Add Update Remove Master Detail Exit
          Find next record
--------------------------------------------------------------------------
                EDIT TELEPHONE SYSTEM CONFIGURATION - TRUNK GROUP
--------------------------------------------------------------------------

                   Site: LAB MT 2E-524
            Trunk Group: 1
               Facility: CO
      Number of Trunks:    5
```

2. Press **A** (add). The data entry fields become blank and the cursor moves to the `Trunk Group` field.

   a. Enter values from your worksheet for the fields displayed.

   b. Check your entries. If incorrect, press **ENTER** to move the cursor to the appropriate field and re-enter it.

   c. When complete, press **ESC** to save this information.

3. Press **D** (detail).

   A screen similar to the sample below appears on display.

```
COMMANDS: Next Previous Add Update Remove Master Detail Exit
          Find Detail record
--------------------------------------------------------------------------
             EDIT TELEPHONE SYSTEM CONFIGURATION - DIAL ACCESS CODE
--------------------------------------------------------------------------

                   Site: LAB MT 2E-524
            Trunk Group: 1
               Facility: CO
      Number of Trunks:    5
      Dial Access Code: 9
       Rate (in cents):   -1
             Rate Type: M
               Carrier: 0
        Incoming Calls: N
```

4. Press **A** (add).

   The cursor moves to the `Dial Access Code` field.

   a. One at a time, enter values from your worksheet for the fields displayed.

   b. Check your entries. If incorrect, press **ENTER** to move the cursor to the appropriate field and re-enter it.

   c. When complete, press **ESC** to save this information.

5. Press **D** (detail). The `Trunk Line:` field appears at the bottom of the screen.

Press **A** (add), enter a trunk number from the worksheet, and press **ESC**.

If there are more trunks on the worksheet under this access code, repeat step 6; otherwise, continue with step 7.

6. Press **M** (master) twice to return to the Trunk Group screen level. If the worksheet has more facilities, repeat steps 2 to 6.
7. When the planning form is complete, press **E** (exit).
8. The Edit Dialed Digit Processing screen appears on display. Proceed to the next section.

Entering the Dialed Digit Processing Table

1. When a screen similar to the one below displays, retrieve the *Dialed Digit Processing Worksheet*.

```
COMMANDS: Query Next Previous Add Update Remove Master Exit
          Query for record
-------------------------------------------------------------------------------
                        EDIT DIALED DIGIT PROCESSING
-------------------------------------------------------------------------------

                         Site: LAB MT 2E-524

Search For:
          Dialed Digits: ?411                    Trunk Group:

Cost As:
            Cost Method: C                 Rate Rate ( cost per call ):   50
            Trunk Group:                                Call Type: SPCL
          Dialed Digits:                     Substitute The Digits? N
```

2. Refer to the worksheet to verify if there are any changes to the default entry displayed. If changes are required, press **U** (update), type over the fields as necessary, and press **ESC**.

   For example, to change the rate from 0¢ to 50¢, press **U** (update), move to the Rate field, enter 50, and press **ESC**.

3. When complete, press **N** (next) to access the next entry and repeat step 2.
4. After checking all default entries, add new entries listed on your worksheet. For example, to add the following worksheet line:

SEARCH PATTERN		REPLACE PATTERN					Substitute Digits?
DIALED DIGITS	Trunk Group	Cost Method	RATE (cents)	Trunk Group	Call Type	DIALED DIGITS	
1212???????		T	0		LOCAL		

   press:

   a. **A** (add), enter **1212.**

b. skip to the `Cost Method` field, enter **T**.

c. then, enter **0** in the `Rate` field.

d. skip to the `Call Type` field, enter **LOCAL**.

e. press **ESC**.

5. Repeat step 4 until you have completed all new entries, then press **E** (exit).

   The Edit CDR Collection Configuration screen appears on display.

6. Proceed to the next section.

Entering CDR Collection Information

1. When a screen similar to the sample below displays, retrieve the *CDR Collection Information Worksheet*.

```
COMMANDS: Update Master Detail Exit
          Find Detail record
----------------------------------------------------------------------------
                        EDIT CDR COLLECTION INFORMATION
----------------------------------------------------------------------------

                          Site: LAB MT 2E-524
            Call Record Format: legendbase
            Communication Type:  1
                     Time Zone:  5
              Daylight Savings? Y
```

2. Press **U** (update), enter the worksheet values in the corresponding fields, and press **ESC**.

   NOTE:
   Press **Ctrl-W** to display the list of call record formats you loaded from the PBX/KTS Interface disk during the startup process.

3. Press **D** (detail). The bottom of the screen displays the default values below.

```
Direct PBX Interface Parameters:
  PBX Port Baud Rate: 1200
   PBX Port Data Bit: 8
   PBX Port Stop Bit: 1
     PBX Port Parity: N
```

4. If you need to make changes, press **U** (update), enter the values in the fields corresponding to items on your worksheet, and press **ESC**.

5. Press **E** (exit).

   This completes the installation program for a basic setup. The Site Configuration Menu appears.

6. Return to CAS main menu by pressing **CANCEL** (F6).
7. Exit CAS by pressing **E** (exit) in the main menu.

Creating the Organization Table

This section describes how to create a Company Organization table by manual data entry of information from the *Organization Configuration Worksheet*.

NOTE:
The Company Organization Table may be created by a data file transfer using CAS's function, Load Organization Table, contained in the Organization Configuration menu.

This operation assumes the existence of a previously prepared text file containing the organization table entries. Creating the file, however, requires access to UNIX commands and is not discussed here.

Loading the Organization Table, in chapter 5, describes the file format and its loading and verification procedures.

Entering the Organization Table

1. Locate your *Organization Table Worksheet* then, from the CAS main menu, select the following sequence:

> Organization Configuration Menu
>
> > Edit Organization Table

A screen similar to the sample below displays.

```
COMMANDS: Query Next Previous Detail Exit
          Query for record
-------------------------------------------------------------------------------
                        EDIT ORGANIZATION TABLE - SITE
-------------------------------------------------------------------------------

                        Site: LAB MT 2E-524
```

2. Press **D** (detail).

   The `Department` field appears on display.

3. Press **A** (add), enter a department (for example, **DEPARTMENT 1**), and press **ESC**.

The screen displays your entry:

```
COMMANDS: Query Next Previous Add Update Remove Master Detail Exit
          Find next record
--------------------------------------------------------------------------------
                    EDIT ORGANIZATION TABLE - DEPARTMENT
--------------------------------------------------------------------------------

                       Site: LAB MT 2E-524
                 Department: DEPARTMENT 1
```

4. Press **D** (detail).

   The `Cost Center` field displays.
   Press **A** (add). Enter a cost center (for example, **COSTCENTER1**), and press **ESC**.

   The screen displays your entry:

```
COMMANDS: Query Next Previous Add Update Remove Master Detail Exit
          Find Detail record
--------------------------------------------------------------------------------
                    EDIT ORGANIZATION TABLE - COST CENTER
--------------------------------------------------------------------------------

                       Site: LAB MT 2E-524
                 Department: DEPARTMENT 1
                Cost Center: COSTCENTER 1
```

5. Press **D** (detail).

   The `Extension` field appears on display.

6. Press **A** (add). Enter an extension (for example, **1101**), and press **ESC**.

   The screen displays your entry:

```
COMMANDS: Query Next Previous Add Remove Master Detail Exit
          Find Detail record
--------------------------------------------------------------------------------
                    EDIT ORGANIZATION TABLE - EXTENSION
--------------------------------------------------------------------------------

                       Site: LAB MT 2E-524
                 Department: DEPARTMENT 1
                Cost Center: COSTCENTER 1
                  Extension: 1101
```

7. Press **D** (detail).

   The personnel record appears on display.

8. Press **A** (add) and enter a name (for example, **JIM THOMAS**). If used, enter data for the other fields, and press **ESC**.

   The screen displays your entries:

```
COMMANDS: Query Next Previous Add Update Remove Master Exit
          Find next record
--------------------------------------------------------------------------------
                      EDIT ORGANIZATION TABLE - PERSONNEL
--------------------------------------------------------------------------------

                      Site: LAB MT 2E-524
                Department: DEPARTMENT 1
               Cost Center: COSTCENTER 1
                 Extension:  1101
                      Name: JIM THOMAS
        Authorization Code:
        Credit Card Number:
                   Carrier:
```

9. If this extension has more users, add them one at a time as in step 9. Otherwise, press **M** (master) to return to the extension level and add all other extensions to this cost center — as in steps 7 to 9.
10. Press **M** (master) to return to the cost center level and add all other cost centers to this department — as in steps 5 to 10.
11. Press **M** (master) to return to the department level and add all other departments — as in steps 3 to 10.
12. When you have entered all information from the worksheet, press **E** (exit).

Displaying/Printing the Organization Table

NOTE:
Before beginning, if you plan to print the organization table make sure your printer is setup properly using an Intuity system process.

1. From the CAS main menu, select the following sequence:

   > Organization Configuration Menu
   > Organization Tables Menu
   > List All Organization Tables

2. Press **G** (generate) to print the report. When the reports print, leave them at the site for future reference. Or press **T** (terminal) to view the reports on your terminal's screen. The task is complete.

Installing and Setting Up the HackerTracker Option

1. If you ordered HackerTracker, locate the option's disk.
2. From the CAS main menu, select the following sequence:

> System Configuration Menu
>
> > Install Update

3. Enter **F** (floppy disk) to indicate the installation medium.
4. Load the HackerTracker disk in the drive and follow the screen instructions to continue.
5. When complete, exit, then re-enter CAS. HackerTracker appears as an option on CAS's main menu.

Use the procedure that follows to select criteria that causes HackerTracker to sound alarms.

NOTE:
Create new call type names for use as alarm criteria by (1) adding the names as new facilities using: CAS's Edit Telephone System Configuration screen (see chapter 4), then (2) use Dialed Digit Processing to associate them to dialed patterns.

For example you may flag calls to specific world zones and/or countries that are not part of your usual calling patterns with DDP entries like the following:

DDP Search for	Set call type	Comments
0115%	S-AM	Mexico, Central & South America
01158%	VNZLA	Venezula
0118%	ASIA	Asia and Far East
011880%	BGLSH	Bangladesh
0119%	MEAST	Middle East & Indian Subcontinent
01192%	PAKIS	Pakistan

1. From the CAS main menu select the following sequence:

> HackerTracker Menu
>
> > Set Alarm Criteria

A screen similar to the one that follows displays.

```
COMMANDS: Next Previous Update Exit
Update - <ESC> to save, ^C to cancel, <RETURN> for next field
--------------------------------------------------------------------------------
                                ALARM CRITERIA
--------------------------------------------------------------------------------
     Criteria Set        1

     Alarm For           E

     Facility            CO  ____

                    Maximum Call Count            Maximum Call Cost
                        per Hour                per Hour  (Dollars)
  Time
  Business Hours         200                        $    600
  Non-Business Hours      30                        $     50
  Non-Work Days           30                        $     50
Enter Business Cost.
```

2. Press **U** (update) to set values as in the list that follows. When complete, press **ESC**, then **E** (exit).

   a. Alarm For. The type of calls to track in the facility named below. Enter:

      - **A** (area code) for the area code indicated in the associated field.
      - **C** (call type) for the call type indicated in the associated field.
      - **Z** (authorization code) and the code in the associated field. (Used only with switches that report authorization codes.)
      - **E** (everything).
      - **N** (nothing — disables this criteria set).

   b. Facility. A facility from the Telephone System Configuration that you wish to monitor or a blank (all facilities).

   c. Maximum Call Count (and Cost) per Hour. Alarm-triggering limits (count = a value in the range 0 to 9999; cost = and amount in the range 0 to 32000 dollars) for these time periods:

      - Business (and Non-business) Hours. The work/non-work hours of each day, defined by the Configure Business Hours screen.
      - Non-Work Days. The "week-end" days defined in the Configure Business Hours screen

3. From the HackerTracker menu, select:

```
> Configure Business Hours
```

A screen similar to the following one displays.

```
COMMANDS: Update Exit
          Update the displayed record
--------------------------------------------------------------------------------
                          CONFIGURE BUSINESS HOURS
--------------------------------------------------------------------------------

                        Starting Time        Ending Time

              Business Hours: 08:00              18:00

          Non-Business Hours: 18:00              08:00


                           Define Work Days

     Sunday   Monday  Tuesday  Wednesday  Thursday  Friday  Saturday
       N        W       W         W         W        W        N
```

4. Press **U** (update) to enter the Starting Times of the Business and Non-business hours as *hours:min*, in a 24-hour format. Enter the same time in both fields to set the entire day as business hours.
5. In the Define Work Days portion of the screen, enter **W** (work) or **N** (nonwork) to identify the days to which the hours apply.
6. When complete, press **ESC**.
7. To end the procedure, press **E** (exit).

Installing and Setting Up CAS Alarm Notification

CAS provides alarms for two features: HackerTracker and a resource monitor. As part of the alarm process, CAS sends a prerecorded voice mail message to a mailbox you designate. Refer to chapter 9 for more information about CAS alarms.

Use the procedure below to install Voice Alarm options.

1. Locate the Voice Alarm disk.
2. From the CAS main menu, select the following sequence:

> System Configuration Menu

> Install Update

3. Enter **F** (floppy disk) to indicate the installation medium.

4. Load the Voice Alarm disk in the drive and follow the screen instructions to continue.
5. When complete, exit, then re-enter CAS. Voice Alarm options appear under the System Configuration menu shown below.

Use the following procedure to identify the mailboxes that receive alarms.

1. From the CAS main menu select the following sequence:

>System Configuration Menu
> Diagnostics & Monitoring Menu
>Voice Alarm Administration Menu
> Administer Voice Alarm Mailboxes

A screen similar to the following one displays.

```
Editing Voice Alarm Mailboxes - Sat Aug 13 23:46:19 EDT 199
1 Voice Alarm Mailbox Administration
→Administer Voice Alarm Mailboxes
 Test Voice Alarms
 Exit

2 Administer Voice Alarm Mailboxes
Notification Mailbox    1001
Warning Alarm Mailbox   1002
Major Alarm Mailbox     1003
```

2. Enter the mailbox number to receive the alarms described below:
   a. Notification — an alarm sent at 70% disk or i-node utilization
   b. Warning — an alarm sent at 80% disk or i-node utilization
   c. Major — an alarm sent at 90% disk or i-node utilization or when HackerTracker alarm criteria is met.
3. Press **CANCEL** (F6) to return to the menu system without saving your entries, or **SAVE** (F3) to maintain your entries and return to the menu system.

NOTE:
I-nodes are part of the file structure that store operating system administative information.

To test the alarm setup use the following procedure:

1. From the CAS main menu, select the following sequence:

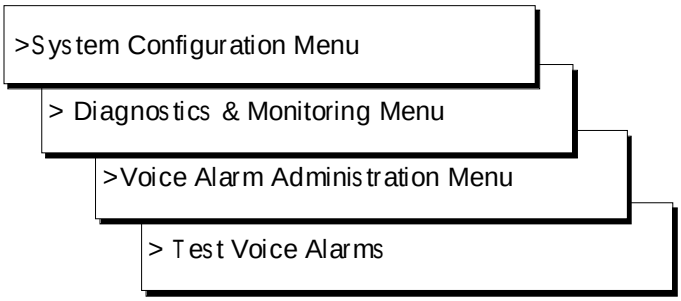

A screen similar to the one below displays.

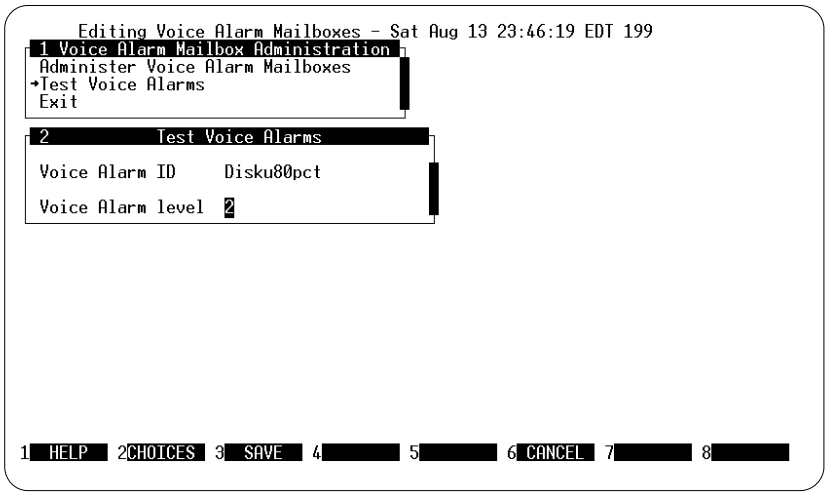

2. Press **CHOICES** (F2) to select a Voice Alarm ID from the following list.
   - `Notification — Disk 70% Used`
   - `Notification — I-nodes 70% Used`
   - `Warning Alarm — Disk 80% Used`
   - `Warning Alarm — I-nodes 80% Used`
   - `Major Alarm — Disk 90% Used`
   - `Major Alarm — I-nodes 90% Used`
   - `Major Alarm — HackerTracker Alarm — Phone Abuse or Fraud`
3. Press **ENTER** and enter the Voice Alarm Level described below that you wish to receive the test call:
   - Level one — sends the selected alarm to the notification alarm mailbox.
   - Level two — sends the selected alarm to the notification and warning mailboxes.

- Level three — sends the selected alarm to all alarm mailboxes.

4. Press **CANCEL** to abort the test and return to the menu system, or press **SAVE** to begin the test and return to the menu system.

Customizing Your System

This section lists the final tasks that customized each CAS installation.

- To create a reports schedule — setting up the frequency for automatically printing reports - see chapter 3.
- To enter the Cost Adjustment Table — setting up call cost markups and duration adjustments — see chapter 7.
- Setting a Password — limiting access to CAS to authorized users — see chapter 8.

Testing Your Installation

Use the procedures described in the following sections to test particular aspects of your installation.

Before you can perform these tests follow the steps below to enable the MAP processor's call collection port.

1. From the CAS main menu, select the following sequence:

> CDR Collection Configuration Menu

> Edit CDR Port Information

A screen similar to the sample below appears.

```
                          CDR Port Information                    Page      1
10:25 PM                     Intuity CAS IP8                      Aug 13 1994
-----------------------------------------------------------------------------
TTY Name................tty01
Communication Type......   1
Port Enabled............ Y
Description............ Comm Port 2
```

2. Note the value of the field `Port Enabled?` If it is `N`, press **U** (update), change it to `Y`, and press **ESC**.

   Press **E** (exit) and return to CAS main menu.

Verifying the SMDR Port Status and Displaying Incoming SMDR

This procedure confirms that the settings for the MAP processor's serial port and your switch's SMDR port are entered correctly.

1. From the Intuity main menu, select the following sequence:

   > Customer/Services Administration
   >Diagnostics
   >Call Accounting Port Diagnostics

   The Record Collection Diagnostics screen displays a message with the SMDR port's status as Enabled or Disabled.

2. If Disabled, you must enable it as described earlier.

   If enabled, the screen displays the last 5 call records received from the switch.

3. Review the records to see if they contain ascii characters or unintelligible symbols. The sample below shows an unprocessed MERLIN LEGEND call record:

   C 08/26/94 08:P44 011345 123 2341 00:30:00 2345 4167 1234512345111111

   If the records appear normal, it shows the SMDR port settings of the switch and MAP processor agree. If not, check the settings at both locations and review the SMDR again.

   If no SMDR displays, check to see if you have the cabling connected properly.

4. Press **ENTER** to return to the menu system

Testing Your PBX/KTS Interface Selection

Follow the steps below to determine if CAS is using the call record format you selected to accurately interpret call records.

NOTE:
Before beginning, make sure your printer is setup properly using an Intuity system process.

1. Place several test calls of at least one minute duration. Wait five minutes, then proceed to the next step.
2. From the CAS main menu, select the following sequence:

> Reports Menu

> Generate Selection Report

A screen similar to the sample that follows appears.

```
COMMANDS: Next Previous Update Generate Exit
          Find Previous record
--------------------------------------------------------------------------------
                                SELECTION REPORT
--------------------------------------------------------------------------------
     Report Number: 28
        Date Range: Aug 13 1994     to     Aug 13 1994
        Time Range: 00:00           to     23:59
    Duration Range:  0:30:00        to     23:59:59
        Cost Range:      $0.00      to       $1000.00
   Extension Range:     0           to     99999
              Site:
        Department:
       Cost Center:
             Trunk:
      Carrier Type:
      Routing Code:
       Source Type:
         Call Type:
      Account Code:
     Dialed Digits:
       Report Type: D
```

3. Press **G** (generate).

   A screen similar to the sample below appears.

```
COMMANDS: Update Generate Exit
          Update the displayed record
--------------------------------------------------------------------------------
                            SELECTION REPORT CRITERIA
--------------------------------------------------------------------------------
         Output Method: T
         Output Device: Your Terminal
```

4. Press **G** (generate). When the report prints, verify that your test calls appear. If you experience any problems, refer to chapter 10.
5. Press **E** (exit) and return to CAS main menu.

The system is installed and operational.

Backing Up CAS Databases

NOTE:
You may abort this procedure after step 1 or 2 by pressing **ESC**.

1. From the CAS main menu, select:

   >System Configuration Menu
   > Diagnostics & Monitoring Menu
   > Backup CAS Data

   The screen displays a message that call costing is stopping and prompts you to continue.

2. Press **ENTER**.

   The screen displays the approximate number of diskettes required and the time it will take to perform the operation. If you need to abort the procedure at this point, press **ESC**; otherwise press **ENTER**.

3. Label CAS BACKUP diskettes with today's date and order number.

   CAUTION:
   Do not omit step 4. Restoring data requires reloading diskettes from the same backup, in the proper order.

5. Insert the first disk, and press **ENTER**.

   CAUTION:
   An automatic disk format occurs before the backup process begins. Make sure the disks you use for backups are blank or do not contain information you need to retain.

5. When prompted, remove the disk, and follow the screen instructions to continue.

   When the backup is complete, a screen message prompts you to `Restart CAS Call Costing? Y/N` Press **Y** (yes).

6. Press **ENTER** to end the procedure.

   The screen returns to a menu display. Your system is back to normal operations.

Sample Reports

C

This appendix provides samples of the following reports:

- Account Code Reports
- ANI/Demographics Reports
- Area Code Summary Report for Incoming Calls
- Area Code Summary Report for Outgoing Calls
- City/State Report for Incoming Calls
- City/State Report for Outgoing Calls
- CDR Analysis Reports
- Call Type Report
- Duration Report
- Time of Day Report
- Trunk Group Report
- Site Report
- Date Report
- Trunk Group Busy Hour Report
- Busy Day Trunk Utilization Report
- Organization by Site Reports
- Organization Detail by Site Report
- Department Summary by Site Report
- Cost Center Summary by Site Report
- Extension Summary by Site Report
- Selection Report

```
                                                Account Code Detail Report
             Page      1
09:39 PM                              ACME TOY FACTORIES                      Nov 08 1994
MAIN
Report Period:  Nov 04 1994 to Nov 05 1994
-------------------------------------------------------------------------------------------
Details for - Account Code: 1001
              Account Name: A B C TOYS

DATE      TIME   DURATION   EXT  RATE CENTER    DIALED NUMBER  CALL TYPE  TRUNK     COST
--------  -----  ---------  ----  -------------  -------------  ---------  -------  -----
11/04/88  08:06   0:05:16   110  MILTON     NC  919-234-5634  PDV OS-OL    001023  $  2.10
11/04/88  14:16   0:13:54   111  PROVIDENCE RI  401-224-4583  PDV OS-OL    001023  $  3.83
11/04/88  15:57   0:08:29   110  NEW YORK   NY  212-283-0001  PDV FX       002012  $  0.72
11/04/88  16:02   O:17:28   113  SAN JOSE   CA  408-224-3212  PDV WATS5    005013  $  0.90
11/05/88  11:03   0:14:31   110  FIJI-ISLANDS   6793432211    PDV IDDD     001034  $ 18.51
11/05/88  16:30   0:06:31   113  SAN JOSE   CA  408-224-3212  PDV WATS5    005013  $  0.35
                 --------                                                        ---------
TOTALS:           1:06:09       TOTAL CALLS: 6                                     $ 26.41
```

```
                                   Account Code Detail Report                 Page      1
09:39 PM                              ACME TOY FACTORIES                      Nov 08 1994
MAIN
Report Period:  Nov 04 1994 to Nov 05 1994
-------------------------------------------------------------------------------------------

DURATION
  ACCOUNT CODE            NAME                      NUMBER         HH:MM:SS           COST
 --------------        --------------------        -------       ---------       ----------
                       UNASSIGNED                      392        59:04:19       $  401.34
  1001                 A B C TOYS                        6         1:06:09       $   26.10
  1002                 BIG BOYS SHOP                     4         0:50:16       $   20.45
  1003                 CRAFTS & GAMES                    3         0:38:45       $    2.16
  1004                 KITES UNLIMITED                   1         0:07:21       $    0.40
  1005                 TODDLER WORLD                     1         0:09:11       $    0.45
  1006                 TRAINCRAFT LTD                    0         0:00:00       $    0.00
  2004                 WAGON WHEELS CO                   2         0:25:05       $    7.96
                                                      ------       --------       ----------
  ORGANIZATION TOTALS:                                  409        62:21:06       $  458.86

End Of Account Code Summary Report…
```

Abandoned Call Selection Detail Report

```
           Date: Aug 10 1994   to   Aug 10 1994
     Start Time:      10:00 AM to 5:00 PM
       Duration:       0:00:00 to 23:59:00
           Cost:   $      0.00 to  $ 100,000.00
      Extension:              0 to 9999
           Site: MAIN
     Department: R&D
    Cost Center: R&D-3
   Carrier Type: All
 Call Direction: All
    Source Type: Abandoned
 Call Type Name: All
     Trunk Name: All
   Account Code: All
  Dialed Digits: All
```

Abandoned Call Selection Detail Report Page 1
02:00 AM ACME TOY FACTORY Aug 11 1990

DATE	TIME	DURATION	SITE	EXT	RATE CENTER	DIALED NUMBER	CALL TYPE	TRUNK	ACCT CODE	COST
08/10/89	10:00	00:01:00	MAIN	50	LOCAL	385-6440	PDV INCOM	801		$ 0.00
08/10/89	12:00	00:00:48	MAIN	50	LOCAL	851-6200	PDV INCOM	801		$ 0.00
08/10/89	13:00	00:01:36	MAIN	50	LOCAL	223-6446	PDV INCOM	801		$ 0.00
08/10/89	04:00	00:00:22	MAIN	50	LOCAL	442-2499	PDV INCOM	801		$ 0.00
		00:03:46								$ 0.00

Records selected = 4

Records in Database = 340037

End of Selection Report

```
                    Area Code Summary Report for Incoming Calls         Page      1
09:39 PM                          ACME TELEMARKETING                  Dec 31 1994
                                     HEADQUARTERS
                    Report Period:  Dec 1 1994  to  Dec 31 1994
-------------------------------------------------------------------------------

        ----------- TOTAL ------------       ----- AVERAGE ------
AREA              DURATION                   DURATION                      % OF TOTAL
CODE    NUMBER    HH:MM:SS     COST          HH:MM:SS    COST     COST/MIN      CALLS
----    ------    --------    ----------    --------  --------  --------      -----
212         12     0:26:00    $     0.00     0:02:10   $   0.00  $    0.00        0.9
617         34     1:57:00    $     0.00     0:03:26   $   0.00  $    0.00        2.4
LOCAL     1337    82:36:00    $     0.00     0:03:42   $   0.00  $    0.00       95.6
OTHER       15     0:22:00    $     0.00     0:01:28   $   0.00  $    0.00        1.0
         ------   ---------   ----------                                        -----
TOTALS:   1398    85:21:00    $     0.00                                         100.0

End Of Area Code Summary Report...
```

```
                     Area Code Summary Report for Ootgoing Calls      Page     1
09:39 PM                          ACME TELEMARKETING                 Dec 31 1994
                                     HEADQUARTERS
                    Report Period:  Dec 1 1994  to  Dec 31 1994
-------------------------------------------------------------------------------
----------- TOTAL ------------              ----- AVERAGE ------
AREA              DURATION                   DURATION                      % OF TOTAL
CODE    NUMBER    HH:MM:SS     COST          HH:MM:SS    COST     COST/MIN    CALLS

----    ------    --------    ----------    --------    --------  --------    -----
201          8     0:34:00  $  10.19         0:04:15     $  1.27   $  0.30     0.5
212         12     0:26:00  $   5.85         0:02:10     $  0.49   $  0.23     0.8
303          3     0:12:00  $   2.87         0:04:00     $  0.96   $  0.24     0.2
315          7     1:55:00  $  20.90         0:04:00     $  2.99   $  0.18     0.5
617         34     1:57:00  $  21.91         0:03:26     $  0.64   $  0.19     2.3
LOCAL     1337    82:36:00  $ 106.96         0:03:42     $  0.08   $  0.02    90.0
INT         56     3:02:00  $ 192.12         0:03:15     $  3.43   $  1.06     3.8
OTHER       15     0:22:00  $   5.16         0:01:28     $  0.34   $  0.23     1.0
         ------   ---------  ----------                                       -----
TOTALS:   1472    87:04:00  $  365.96                                          100.0

End Of Area Code Summary Report
```

```
                                City/State Report for Incoming Calls            Page      1
09:39 PM                              ACME TOY FACTORIES                         Oct 11 1990
                                             MAIN
                            Report Period:  Oct 04 1990 to Oct 05 1990
-------------------------------------------------------------------------------------------

  NUMBER              CITY/STATE            AREA CODE         % TOTAL
  ------           -----------------       -----------         -------
  10               ROCHESTER NY             716                  10 %
  15               SYRACUSE NY              315                  15 %
  20               VIRGINIA BEACH VA        804                  20 %


Total call records searched = 100

INCLUDES ALL EXCHANGES FOR EACH CITY/STATE

End of City/State Report...
```

```
                                City/State Report for Outgoing Calls            Page      1
09:39 PM                              ACME TOY FACTORIES                         Oct 11 1990
                                             MAIN
                            Report Period:  Oct 04 1990 to Oct 05 1990
-------------------------------------------------------------------------------------------

  NUMBER              CITY/STATE            AREA CODE         % TOTAL
  ------              -----------------     ---------          -------
  12                  UTICA MI              313                 12 %
  18                  BOSTON MA             617                 18 %
  19                  GENESEO NY            716                 19 %


Total call records searched = 100

INCLUDES ALL EXCHANGES FOR EACH CITY/STATE

End of City/State Report...
```

```
                                    Call Type Report                        Page     1
09:39 PM                          ACME TOY FACTORIES                      Nov 04 1994
                                          MAIN
                        Report Period:  Nov 041994 to Nov 05 1994
-------------------------------------------------------------------------------------

                                          DURATION
CALL TYPE               NUMBER            HH:MM:SS          COST
-----------             ------            --------       ----------
FX                          35             7:13:25        $   35.60
IDDD                        17             2:22:30        $  191.64
INCOM                      178            25:14:03        $    0.00
IS-IL                        9             1:24:30        $   11.71
IS-OL                       27             3:42:02        $   56.68
IWTS0                        0             0:00:00        $    0.00
IWTS1                        0             0:00:00        $    0.00
IWTS2                        0             0:00:00        $    0.00
IWTS3                        0             0:00:00        $    0.00
IWTS4                        0             0:00:00        $    0.00
IWTS5                        0             0:00:00        $    0.00
IWTS6                        0             0:00:00        $    0.00
LOCAL                       21             2:50:20        $    4.39
OS-IL                        0             0:00:00        $    0.00
OS-OL                       36             5:49:05        $  115.99
SPCL                         0             0:00:00        $    0.00
WATS0                        0             0:00:00        $    0.00
WATS1                        0             0:00:00        $    0.00
WATS2                        0             0:00:00        $    0.00
WATS3                        0             0:00:00        $    0.00
WATS4                        0             0:00:00        $    0.00
WATS5                       86            13:45:11        $   42.85
WATS6                        0             0:00:00        $    0.00
ZERO+                        0             0:00:00        $    0.00
                        ------            --------       ----------
ORGANIZATION TOTALS:       409            62:21:06        $  458.86
```

```
                                    Duration Report                          Page      1
09:39 PM                            ACME TOY FACTORIES                         Nov 08 1994
                                          MAIN
                        Report Period:  Nov 041994 to Nov 05 1994
-----------------------------------------------------------------------------------------

     DURATION                           DURATION
HH:MM:SS - HH:MM:SS       NUMBER        HH:MM:SS          COST
-------------------       ------        --------       ---------
00:00:00 - 00:00:59            0         0:00:00       $    0.00
00:01:00 - 00:02:59           47         1:40:33       $   11.48
00:03:00 - 00:05:59           93         7:03:28       $   71.72
00:06:00 - 00:14:59          207        34:24:57       $  277.73
00:15:00 - 00:29:59           60        18:03:11       $   94.43
00:30:00 - 00:59:59            2         1:08:57       $    3.50
01:00:00 - OVER                0         0:00:00       $    0.00
                          ------        --------      ----------
ORGANIZATION TOTALS:         409         62:21:06      $  458.86
```

Time of Day Report — Page 1

09:39 PM — ACME TOY FACTORIES — Nov 04 1994

MAIN

Report Period: Nov 041994 to Nov 05 1994

TIME	NUMBER	DURATION HH:MM:SS	USAGE	COST
12:00a - 12:59a	0	0:00:00	00.0 %	$ 0.00
01:00a - 01:59a	0	0:00:00	00.0 %	$ 0.00
02:00a - 02:59a	0	0:00:00	00.0 %	$ 0.00
03:00a - 03:59a	0	0:00:00	00.0 %	$ 0.00
04:00a - 04:59a	0	0:00:00	00.0 %	$ 0.00
05:00a - 05:59a	0	0:00:00	00.0 %	$ 0.00
06:00a - 06:59a	0	0:00:00	00.0 %	$ 0.00
07:00a - 07:59a	0	0:00:00	00.0 %	$ 0.00
08:00a - 08:59a	45	7:52:51	12.6 %	$ 120.90
09:00a - 09:59a	67	10:29:15	16.8 %	$ 128.87
10:00a - 10:59a	70	10:20:26	16.5 %	$ 48.25
11:00a - 11:59a	66	8:33:21	13.7 %	$ 19.76
12:00p - 12:59p	8	1:10:20	01.8 %	$ 17.96
01:00p - 01:59p	41	7:33:43	12.1 %	$ 28.70
02:00p - 02:59p	42	6:17:36	10.1 %	$ 16.33
03:00p - 03:59p	38	5:08:04	08.2 %	$ 66.05
04:00p - O4:59p	30	4:38:10	07.4 %	$ 11.32
05:00p - 05:59p	2	0:17:20	00.0 %	$ 0.72
06:00p - 06:59p	0	0:00:00	00.0 %	$ 0.00
07:00p - 07:59p	0	0:00:00	00.0 %	$ 0.00
08:00p - 08:59p	0	0:00:00	00.0 %	$ 0.00
09:00p - 09:59p	0	0:00:00	00.0 %	$ 0.00
10:00p - 10:59p	0	0:00:00	00.0 %	$ 0.00
11:00p - 11:59p	0	0:00:00	00.0 %	$ 0.00
ORGANIZATION TOTALS:	409	62:21:06	100.0 %	$ 458.86

End Of Time Of Day Report…

```
                                   Trunk Group Report                          Page      1
09:39 PM                            Acme Toy Factories                          Nov 08 1994
                                          MAIN
                         Report Period:  Nov 041994 to Nov 05 1994
-------------------------------------------------------------------------------------------

Trunk Group:   1                     Facility: CO

TRUNK        -------- NUMBER --------     ---- DURATION ----     ----------- COST ----------
              TOTAL    INCOM   ON-NET       TOTAL   AVERAGE        TOTAL     /CALL    /MIN
-------      -------  -------  ------     --------  --------     ---------  -------  -------
1023             27    0.0 %   0.0 %     03:42:02  00:08:13     $   31.29  $  1.16  $  0.14
1024             36    0.0 %   0.0 %     05:49:05  00:09:41     $   53.77  $  1.49  $  0.15
1025             86   57.0 %   0.0 %     13:45:11  00:09:30     $   74.68  $  0.86  $  0.09
1026             35   51.4 %   0.0 %     07:13:25  00:12:22     $   55.62  $  1.58  $  0.13
1034              0    0.0 %   0.0 %     00:00:00  00:00:00     $   00.00  $  0.00  $  0.00
????              0    0.0 %   0.0 %     00:00:00  00:00:00     $   00.00  $  0.00  $  0.00
             -------  -------  ------     --------  --------     ---------  -------  -------
TOTALS:         184   36.4 %   0.0 %     30:29:43  00:09:56     $  215.36  $  1.17  $  0.12

Trunk Group:   2                    Facility: WATS2

TRUNK        -------- NUMBER --------     ---- DURATION ----     ----------- COST ----------
              TOTAL    INCOM   ON-NET       TOTAL   AVERAGE        TOTAL     /CALL    /MIN
-------      -------  -------  ------     --------  --------     ---------  -------  -------
2010             49    0.0 %   0.0 %     08:25:15  00:10:18     $   65.65  $  1.34  $  0.13
2011             81    0.0 %   0.0 %     11:13:01  00:08:19     $   87.49  $  1.08  $  0.13
2012             63    0.0 %   0.0 %     09:48:06  00:09:20     $   76.44  $  1.21  $  0.13
             -------  -------  ------     --------  --------     ---------  -------  -------
TOTALS:         193    0.0 %   0.0 %     29:26:22  00:09:09     $  229.58  $  1.19  $  0.13


Trunk Group:   3                     Facility: T-NY

TRUNK        -------- NUMBER --------     ---- DURATION ----     ----------- COST ----------
              TOTAL    INCOM   ON-NET       TOTAL   AVERAGE        TOTAL     /CALL    /MIN
-------      -------  -------  ------     --------  --------     ---------  -------  -------
3051             12   33.3 %    0.0%     00:45:01  00:03:45     $    5.40  $  0.45  $  0.12
3052             20   10.0 %    0.0%     01:11:00  00:03:55     $    8.52  $  0.43  $  0.12
             -------  -------  ------     --------  --------     ---------  -------  -------
TOTALS:          32   18.8 %    0.0%     01:56:01  00:03:38     $   13.92  $  0.44  $  0.12
```

```
                                   Site Report                          Page      1
09:39 PM                        ACME TOY FACTORIES                    Nov 08 1994
                       Report Period:  Nov 04 1994 to Nov 05 1994
--------------------------------------------------------------------------------

                                                     DURATION
     SITE                              NUMBER        HH:MM:SS          COST
---------------                        ------        --------       ----------
MAIN                                      409        62:21:06       $   458.86
                                       ------        --------       ----------
ORGANIZATION TOTALS:                      409        62:21:06       $   458.86

End Of Site Report…
```

```
                                   Date Report                          Page      1
09:39 PM                        ACME TOY FACTORIES                    Nov 08 1994
                                       MAIN
                       Report Period:  Nov 041994 to Nov 05 1994
--------------------------------------------------------------------------------

                                                     DURATION
     DATE                              NUMBER        HH:MM:SS          COST
---------------                        ------        --------       ----------
11/04/89                                  265        43:02:20       $   307.01
11/05/89                                  144        19:17:46       $   151.85
                                       ------        --------       ----------
ORGANIZATION TOTALS:                      409        62:21:06       $   458.86

End Of Date Report…
```

```
                              Trunk Group Busy Hour Report              Page      1
09:39 PM                           ACME TOY FACTORIES                   Nov 08 1994
                                       MAIN
                       Report Period:  Nov 04 1994 to Nov 05 1994
--------------------------------------------------------------------------------
   TRUNK          NUMBER           BUSY            DATE            PERCENT
   GROUP            OF             HOUR                          UTILIZATION
                  TRUNKS
----------        ------     ----------------   ------------     -----------
      1             6         09:00a - 09:59a    Nov 041994         86%
      2             3         13:00a - 13:59a    Nov 051994         35%
      3             2         09:00a - 09:59a    Nov 041994         76%
   9999             1         15:00a - 15:59a    Nov 041994        155%

End Of Trunk Group Busy Hour Report…
```

```
                                Busy Day Trunk Utilization Report                Page      1
09:39 PM                              ACME TOY FACTORIES                         Nov 08 1994
                                            MAIN
                           Report Period:  Nov 041994 to Nov 05 1994
-------------------------------------------------------------------------------------------
Busy Day:  Nov 04 1994
                                                 DURATION          TRUNK
     TIME                          NUMBER        HH:MM:SS       UTILIZATION
---------------                    ------       --------       -----------
12:00a - 12:59a                         0        0:00:00          00.0 %
01:00a - 01:59a                         0        0:00:00          00.0 %
02:00a - 02:59a                         0        0:00:00          00.0 %
03:00a - 03:59a                         0        0:00:00          00.0 %
04:00a - 04:59a                         0        0:00:00          00.0 %
05:00a - 05:59a                         0        0:00:00          00.0 %
06:00a - 06:59a                         0        0:00:00          00.0 %
07:00a - 07:59a                         0        0:00:00          00.0 %
08:00a - 08:59a                        40        5:32:01          60.5 %
09:00a - 09:59a                        52        9:10:10          81.8 %
10:00a - 10:59a                        30        7:20:10          80.3 %
11:00a - 11:59a                        31        7:21:03          80.3 %
12:00p - 12:59p                         8        0:10:16          00.2 %
01:00p - 01:59p                        28        5:29:05          60.5 %
02:00p - 02:59p                        32        6:07:05          54.6 %
03:00p - 03:59p                        28        4:12:20          37.9 %
04:00p - O4:59p                        24        2:31:03          22.7 %
05:00p - 05:59p                         2        0:17:07          02.6 %
06:00p - 06:59p                         0        0:00:00          00.0 %
07:00p - 07:59p                         0        0:00:00          00.0 %
08:00p - 08:59p                         0        0:00:00          00.0 %
09:00p - 09:59p                         0        0:00:00          00.0 %
10:00p - 10:59p                         0        0:00:00          00.0 %
11:00p - 11:59p                         0        0:00:00          00.0 %
                                   ------       --------
ORGANIZATION TOTALS:                  265       43:03:20

End Of Busy Day Trunk Utilization Report…
```

```
                         Organization Detail by Site Report

  Start Time :       0:00 to       23:59
    Duration :    0:00:00 to    23:59:00
        <AND>
        Cost :  $    0.00  to  $  1,000.00
  Department :  All
 Cost Center :  All
   Call Type :  All


                            Organization Detail by Site Report           Page    1
03:02 PM                          ACME TOY FACTORIES                     Oct 02 1994
                                        MAIN
                      Report Period:  Oct 02 1994  to  Oct 02 1994
                                       ALL CALLS
-------------------------------------------------------------------------------------
Department                MARKETING
  Cost Center             CUSTOMER SRVC
     Extension:  204      Name:  BRENNAN, VINCENT

               DURATION
DATE     TIME HH:MM:SS RATE CENTER DIALED NUMBER CALL TYPE  TRUNK  ACCOUNT CODE  COST
-------- ----- -------- ----------- ------------- --------- ----- ------------ ------
10/02/88 08:15 0:10:32 BANGOR   ME 207-947-0551 PDV OS-OL   9      2004       $  3.83
10/02/88 09:59 0:02:56 BANGOR   ME 207-947-0551 PDV OS-OL   9      2004       $  1.22
10/02/88 10:44 0:01:54 SKOKIE   IL 674-1234     PDV IS-OL   9                 $  0.71
10/02/88 11:04 0:04:10                          PIV INCOM   801               $  0.00
10/02/88 11:20 0:01:10              223-1234    LDV LOCAL   9                 $  0.00
10/02/88 11:48 0:00:40              555-1212    PDV SPCL    9                 $  0.50
                --------                                                      ---------
TOTALS          0:21:22                   TOTALS CALLS: 6                     $  6.26
```

```
                                Department Summary by Site Report

 Start Time :       0:00 to       23:59
   Duration :    0:00:00 to    23:59:00
       <AND>
       Cost :  $   0.00  to  $  1,000.00
 Department :  All
Cost Center :  All
  Call Type :  All

                             Department Summary by Site Report                    Page      1
09:39 PM                            ACME TOY FACTORIES                             Nov 0 1994
                                          MAIN
                        Report Period:  Nov 041994 to Nov 05 1994
                                        ALL CALLS
-----------------------------------------------------------------------------------------------
                                          DURATION
    DEPARTMENT              NUMBER        HH:MM:SS          COST
---------------------       ------        --------       ----------
ACCOUNTING                      40         2:20:06       $    58.56
MARKETING                      369        60:01:00       $   400.30
UNATTACHED                       0         0:00:00       $     0.00
                            ------        --------       ----------
ORGANIZATION TOTALS:           409        62:21:06       $   458.86
```

```
                         Cost Center Summary by Site Report

  Start Time :       0:00 to       23:59
    Duration :    0:00:00 to    23:59:00
         <AND>
        Cost :  $   0.00  to  $  1,000.00
  Department :  All
 Cost Center :  All
   Call Type :  All


                          Cost Center Summary by Site Report          Page      1
09:39 PM                      ACME TOY FACTORIES                      Nov 0 1994
                                     MAIN
                        Report Period:  Nov 041994 to Nov 05 1994
                                    ALL CALLS
-------------------------------------------------------------------------------

DEPARTMENT                                DURATION
     COST CENTER           NUMBER        HH:MM:SS          COST
---------------------      ------        --------        ----------
ACCOUNTING
  ACC                          30         1:45:56      $    52.06
  ADMIN                        10         0:34:10      $     6.50
                           ------        --------      ----------
ACCOUNTING TOTALS:             40         2:20:06      $    58.56

MARKETING
  CUSTOMER SRVC               140        20:36:40      $    55.10
  SALES                       229        40:24:20      $   345.20
                           ------        --------      ----------
MARKETING TOTALS:             369        60:01:00      $   400.30

UNATTACHED
  UNATTACHED                    0         0:00:00      $     0.00
                           ------        --------      ----------
UNATTACHED TOTALS:              0         0:00:00      $     0.00

                           ------        --------      ----------
ORGANIZATION TOTALS:          409        62:21:06      $   458.86


End Of Cost Center Summary by Site Report...
```

Extension Summary by Site Report

```
  Start Time :       0:00 to       23:59
    Duration :    0:00:00 to    23:59:00
         <AND>
        Cost :  $   0.00  to  $  1,000.00
  Department :  All
 Cost Center :  All
   Call Type :  All
```

```
                                Extension Summary by Site Report                    Page      1
09:39 PM                                ACME TOY FACTORIES                          Nov 0 1994
                                              MAIN
                             Report Period:  Nov 041994 to Nov 05 1994
                                            ALL CALLS
-------------------------------------------------------------------------------------------------
DEPARTMENT
    COST CENTER                                   DURATION
        EXTENSION                   NUMBER        HH:MM:SS            COST
---------------------               ------        --------          ----------
ACCOUNTING
  ACC
    101                                  5         0:12:05           $    2.60
    102                                 11         0:45:25           $   16.40
    103                                  5         0:20:12           $   13.05
    104                                  6         0:23:04           $   20.01
    105                                  3         0:05:10           $    0.00
                                    ------        --------          ----------
  ACC TOTALS:                           30         1:45:56           $   52.06

  ADM
    301                                  4         0:23:16           $    1.25
    302                                  6         0:10:54           $    5.25
                                    ------        --------          ----------
  ADM TOTALS:                           10         0:34:10           $    6.50
                                    ------        --------          ----------
ACCOUNTING TOTALS:                      40         2:20:06           $   58.56

MARKETING
  CUSTOMER SERVICE
    201                                 14         2:03:00           $    5.51
    202                                 10         1:28:12           $    3.94
    203                                 18         2:39:08           $    7.08
    204                                  9         1:19:15           $    3.50
    205                                 19         4:47:01           $    7.80
    206                                 13         1:54:02           $    5.10
    207                                 15         1:12:02           $    6.01
    208                                 14         1:03:31           $    5.01
    209                                 11         1:36:29           $    4.32
    210                                 17         2:34:00           $    6.74
                                     -----        -------           ----------
CUSTOMER SERVICE TOTALS:            140        20:36:40           $   55.10
```

```
                                    Selection Detail Report #1

           Date: Aug 10 1994   to   Aug 10 1994
     Start Time:      10:00 AM to 1:00 PM
       Duration:       0:00:00 to 23:59:00
           Cost:   $      0.00 to  $ 100,000.00
      Extension:           230 to 230
           Site: MAIN
     Department: R&D
    Cost Center: R&D-3
   Carrier Type: All
 Call Direction: All
    Source Type: Abandoned
 Call Type Name: All
     Trunk Name: All
   Account Code: All
  Dialed Digits: All


                                    Selection Detail Report                        Page       1
02:00 AM                                ACME TOY FACTORY                            Aug 11 1990
-----------------------------------------------------------------------------------------------------


DATE     TIME  DURATION  SITE      EXT RATE CENTER DIALED NUMBER CALL TYPE TRUNK ACCT CODE   COST
-------- ----- -------- -----  ------ ----------- ------------- --------- ----- --------- --------
08/10/89 10:00 00:01:00 MAIN       23  BRKLYN NY  718-385-6440  PDV IS-IL   801         $   0.45
08/10/89 12:00 00:00:48 MAIN       23  BRKLYN NY  718-851-6200  PDV IS-IL   801         $   0.45
08/10/89 13:00 00:01:36 MAIN       23  BRKLYN NY  718-223-6446  PDV IS-IL   801         $   0.45
08/10/89 04:00 00:00:22 MAIN       23  BRKLYN NY  718-442-2499  PDV INCOM   801         $   0.00
               --------                                                                  --------
               00:58:46                                                                    $ 1.24

Records selected = 4

Records in Database = 340037

End of Selection Report
```

Glossary

A

access code
A field in a call detail record that contains the numbers dialed to get an outside line to a telephone facility such as a central office (CO).

account code
A field in a call detail record that contains a user-defined identifier. Account codes are typically dialed when placing or receiving a call to identify the call subject matter, client account, and so on.

account code report
A CAS report listing detailed call information for each active client account number.

add
The **A** (add) command in CAS used to append a new record to a file.

answer supervision
The capability to detect when a telephone call has been answered.

area code
A geographic area encompassing many CO exchanges. A telephone number, for example, 716-385-6440, identifies the area code (716) and CO exchange (385) used by the subscriber's line (6440).

ASCII
The standard digital code for alphanumeric characters sent between computers established by the American Standards Committee for Information Interexchange.

authorization code
A field in a call detail record output by some switches that contains a user-defined identifier. Authorization codes are typically used when placing a call to identify the call origin or charge information.

automatic number identification (ANI)
The ability of ISDN equipment to pass to their subscribers (in digital form) the phone number of subscribers' callers.

B

baud rate
A measurement of digital transmission speed representing the number of signal events per second. If the signal event represents the presence or absence of one bit, then the baud is identical to bits per second.

bits per character
The length (number of bits) of a single character transmission.

C

call detail recording (CDR)
A switch capability with which the details concerning the path of a call from origination to termination are recorded as a call detail record.

call type
The type of telephone service used by the call. Local, IDDD, WATS, etc. are call type examples used in CAS reports.

carrier
1. A company that provides telephone services, such as AT&T Communications, MCI, and US SPRINT. 2. A field in a CDR record that contains the interexchange carrier (IXC) code for the carrier used by a call.

central office
The telephone company facility that routes and connects calls from a local area.

CENTREX
A service provided by some local telephone companies, whereby subscribers are given switch-like capabilities by sharing CO facilities.

CCSA
Common Control Switching Arrangement. Switching facilities connected by the telephone company to corporate Tie line networks. All stations in the network can then dial one another regardless of distance and without using exchange facilities. They can also dial outside the network via local and/or foreign exchange lines.

correction time
An estimate of how long it takes to make a telephone connection. This includes all non-chargeable time from dialing to answering a call.

cost center
A level in a company's organizational hierarchy used by CAS to allocate telephone expenses.

costing
The set of CAS functions and data files used to screen and then, compute the cost of valid calls; the process of computing the cost of calls.

cursor
A movable pointer that designates where your input is entered on the screen or where you select an item from a displayed menu. The cursor occupies one character position.

D

database
Information in CAS tables that identifies its users' equipment, company organization, geographical area, etc.

data bits
The actual length (number of bits) of a single character transmitted by a device.

data entry screen
The screen display used to view and/or edit database records.

default
The value, option, or feature automatically supplied by the system, unless the user specifies otherwise.

department
A level in a company's organizational hierarchy used by CAS to allocate telephone expenses.

detail
The **D** (detail) command; used to access a "branch" in a tree-like structured file.

detail reports
The Organization or Account Code Detail Reports; two reports that list every call record from every extension or active account, respectively.

dialed digit processing
A CAS feature whereby dialed number inconsistencies can be identified for additional processing.

dialing pattern
The way a telephone number is dialed from a locality.

directory
A CAS report listing the company's employees, their extensions and associated information from the Company Organization table.

E

equal access
The ability to place long-distance calls over any carrier network. A customer's primary carrier is typically accessed by dialing 1 or 0 before the telephone number, any other carrier is accessed by its 10xxx dialed code.

enter
The carriage return key on the terminal keyboard. Referred to as **ENTER** on CAS screen displays.

exchange
A geographic area within which calls are generally toll-free. A telephone number, for example, 716-385-6440, identifies the area code (716) and CO exchange (385) used by the subscriber's line (6440).

exit
The **E**xit command in CAS; used to move out of the current data entry screen or menu and return to the previous menu.

extension
A field in a call detail record that contains the number of a voice terminal, indicating the origin of an outgoing call or the destination of an incoming call.

F

facility
A service provided by a telephone company to its subscribers.

file
A collection of program, instructions, or data records stored on a disk. Each file has a label, following the operating system naming conventions.

foreign exchange (FX)
A line connecting a subscriber's switch to a remote CO.

format
The arrangement or layout of data.

H

holidays
The holidays during which telephone discount rates apply.

I

Integrated Services Digital Network (ISDN)
A network that provides end-to-end digital communications to support a wide range of services, including voice and data, to which users have access by a set of standard, multipurpose user network interfaces.

interface
A device or system forming a common boundary at which independent devices or systems interact.

International Direct Distance Dial (IDDD)
The CAS call type for calls to a foreign country dialed using the 011 toll prefix.

IS-IL
The CAS call type for in-state, in-LATA calls; a toll call placed within its own state and LATA boundaries.

IS-OL
The CAS call type for in-state, out-of-LATA calls; a toll call placed within its own state, but outside its LATA boundaries.

IWTS*n*
The CAS call type for an incoming, band *n* WATS call, where *n* = 0 to 9.

K

KTS
Key Telephone System; see switch.

L

LATA
Local Access Transport Area; a region covering adjacent COs. Calls within their LATA are serviced by the local telephone company, calls outside their LATA require the services of a long distance carrier.

login
The process of gaining access to a computer system.

M

master
The **M** (master) command in CAS; used from a "lower branch" to access the "parent" record in a tree-like structured file.

Megacom
Megacom 800 and Megacom are two services of AT&T similar to InWATS and OutWATS — except that the local lines from a subscriber's site and the AT&T service office are the responsibility of the subscriber (typically T1 lines).

memory
The working storage area in the computer where programs and data are processed.

menu
A list of selectable items on a screen.

minimum duration
A threshold value specified by the user that tells CAS when to consider a call valid.

MTS
Message Telephone Services; a call rating system for long distance services.

N

network
1. In the context of voice and/or data communications, a complex consisting of two or more interconnected switching systems. 2. In the context of computer operation, a system consisting of one or more computers and the connected terminals and related devices such as modems and input/output (I/O) channels.

next
The **N** (next) command of CAS; used to access the next sequential record in a file (or portion thereof), retrieved either by opening the file or by the **Q** (query) command, once the file is open.

O

OS-IL
CAS call type for out-of-state, in-LATA calls; a toll call that crossed its state boundaries, but stayed within its own home LATA.

OS-OL
CAS's call type for out-of-state, out-of-LATA calls; a toll call that crossed both its state and LATA boundaries.

P

parity
A method used by some devices to check that data was transmitted correctly. Parity can be "odd," "even," or not used at all.

password
A unique string of characters that a user enters to access a program.

PBX
Private Branch Exchange. See switch.

port
The data transmission "outlet" on a device used for communicating with other devices.

previous
The **P** (previous) command in CAS; used to access the record previously displayed on the screen.

Primary Rate Interface (PRI)
An ISDN link from a central office to a customer's switch.

Q

query
The **Q** (query) command in CAS; used to retrieve selected records from a file. The first record will be displayed on the screen. Subsequent records, if any, display by using the **N** (next) command.

S

selection report
A CAS report that lists summary or detailed call record information based on the selection of a time, date, cost, duration, extension, account code, number, etc.

sitegen disk
The CAS disk containing site-specific call rating information on customized systems.

SMDR
Station Message Detail Recording. A switch capability with which the details concerning the path of a call from origination to termination are recorded in the form of an SMDR record. Also called call detail recording (CDR).

SPCL
The CAS call type for "special numbers," such as 411, 800 and 900 numbers.

stop bits
The number of bits that trail after the transmission of a single character.

summary reports
A collection of CAS reports condensing and summarizing call record information by total number of calls, duration, and cost.

switch
The software-controlled communications processor complex that interprets dialing pulses, tones, and/or keyboard characters, and makes the proper interconnections both within the system and external to the system. The switch itself consists of a digital computer, software, storage device (memory), and carriers with special hardware to perform the actual connections. A switch provides voice and/or data communications services (including access to public and private networks) for voice and data terminals on a customer's premises.

T

T1
A digital facility that can carry multiple, simultaneous voice or data communications at high speeds on the same physical link. A T1 line is connected to a customer's switch using transmit/receive interface equipment that translates the voice or data streams into and out of a carrier's digital network.

tandem call
A connecting call in a telephone network, coming into a switch through one trunk and transferred out again through another.

threshold
A critical level which, when reached, produces a system response.

tie
A line that "ties" together two telephone switches. Extensions at either point, as well as the CO exchange, can be dialed locally.

trunk
1. A dedicated communication channel between two switches. 2. A field in a call detail record that contains the identifier for the specific trunk (or group of trunks) used by the call. For example, CAS translates the "used access code" in some AT&T switches as trunks.

tty name
The "logical" name of a physical computer port.

U

UNIX operating system
The program that manages the resources of some computers, including input and output procedures, process scheduling, and file systems.

update
The **U** (update) command of CAS; used to edit the information of the record currently on display.

utilities
A group of programs that provide a specific application within a computer.

V

valid calls
Calls that have computable costs. That is, calls over the duration threshold, routed through defined trunks, and dialed using a pattern "understood" by CAS as able to reach a destination. CAS discards invalid calls.

W

window
An online "help" feature, used to display information about the selected function on a menu or to list valid entries for the current field on a data entry screen. Where enabled, help windows are accessible by pressing the **Ctrl-W** keys.

WATS
Wide Area Telephone Services; a type of long distance service provided by some telephone companies like MCI and AT&T, where bulk usage over a billing period determines the rates for calls within the same distance band.

WATS*n*
CAS call type for an outgoing, band *n* WATS call, where *n* = 0 to 9.

Z

zero-based rating
A default rating algorithm that computes call rates to $0.00.

Index

A

abandoned call report, 3-2
access codes. *see dial access codes*
account code reports
  detail report, 3-11
  summary report 3-11
  sample, C-2
account codes
  changing in call records 4-8
  entering and editing table 4-7
  listing table 4-11
  planning setup 2-23
  worksheet 2-31
alarms
  HackerTracker (CAS), 9-5
  messages in Intuity alarms, 9-12
  resource monitor (CAS), 9-11
  setup for VoiceAlarm, 9-12
area code
    summaries, 3-2
    and fraud prevention, *see HackerTracker*
ANI/demographics reports, 3-2
attended back-up to tape (Intuity) 8-9
authorization code
  and fraud prevention, *see HackerTracker*
  see also carrier information

B

backups
  to disk (CAS), 8-7, 8-8
  to tape (Intuity), 8-7, 8-9
busy day trunk utilization report, 3-12

C

call collection
  listing tables, 6-5
  planning setup, 2-14
  port information, 6-4
  record formats, 6-3
  worksheet, B-27
call cost adjustment
  defaults, 7-5
  entering and editing by call type, 7-5
  holidays, 7-7
  listing table, 7-15
  planning setup, 2-21
  worksheet, 2-30
Call costing (illustration), 7-2
call record database
  checking storage (CAS), 8-13
  rebuilding (Intuity), 9-4
  verifying status (Intuity), 8-16
call record disk usage, 8-13
call record formats, 6-3
  verifying switch type, B-14
call type report, 3-12
call types
  and fraud prevention, 9-6
  cost adjustment, 7-5
  defaults, 7-6
  relationship to facilities, 4-6
  report, 3-12
capacities and features (CAS), 2-2
Carrier information, 7-4
  listing table, 7-15
  see also telephone system configuration
CAS system
  installation, B-1
  operation, 1-2
  planning, 2-1
changing Intuity screen colors, 1-6
commands (CAS), *see user interface, CAS*
commands (Intuity), *see functions keys*
configuration, CDR collection, 6-1
configuration, costing, 7-1
configuration, organization, 5-1
configuration, site, 4-1
cost center summary report, 3-8
cost centers, *see organization table*

D

date report, 3-12
defaults
  call cost adjustments, 7-5
  call record formats, 2-15
  call types, 7-6
  dialed digit processing, 2-9
  report title codes, 2-19
  table title codes, 2-19
DEFINITY G1/G3
  supported, 2-3

connectivity, B-6
verify call record format, B-16
verify active SMDR trunk groups, B-17
deleting call records, 8-2
departments, *see organization table*
dial access codes, *see telephone system configuration, editing information*
dialed digit processing
defaults, 2-9
editing, 7-8
entering during installation, B-21
listing, 7-15
setup planning, 2-8
worksheet, 2-26
dialing prefix, *see carrier information*
directories, *see listings*
disk usage, 8-13
display SMDR, B-33
duration report, 3-12
duration, minimum for calls, 7-7

E

extensions, *see organization table*
extension summary report, 3-8

F

facility.
naming conventions, 4-6
see also call types, telephone system configuration
fraud prevention, *see HackerTracker*
field movement keys (Intuity), 1-8
file format, organization table, 5-7
function keys (Intuity) 1-4

H

HackerTracker
alarm criteria, 9-6
alarm messages, 9-9
edit setup, 9-6
installation, B-27
printing tables, 9-10
reports, 9-8
hardware information (CAS), 2-2
holiday table, 7-7
listing, 7-15

I

incoming calls, *see call types*
installing CAS via disk, B-1
connecting MAP processor to switch, B-2
creating organization table, B-24
executing CAS software setup process, B-13
install rate tables, B-18
install/setup HackerTracker, B-27
install/setup VoiceAlarm, B-29
loading CAS software, B-12
required materials, B-11
site setup, B-18
system customization, B-32
test, B-32
verify active SMDR trunk groups, B-18
verify installed software, B-2
verify switch call record format, B-14

L

listing
costing tables, 7-15
directories and organization tables, 5-12
site tables, 4-11
system tables, 8-14
loading organization table, 5-7
data file format, 5-7
list information, 5-12
verifying, 5-9
log, CAS events
file descriptions, 8-6
using to monitor CDR collection, 9-3
viewing, 8-5
logging out (CAS), 1-12
login (CAS), 1-12

M

main menu
CAS, 1-9
Intuity, 1-1
maintenance schedule (CAS), 1-14
markup/discount calls, *see call cost adjustments*
menu system (CAS), A-1
MERLIN LEGEND
connectivity, B-2
supported, 2-3
verify call record format, B-14
monitoring CDR collection, 9-3
moving organization table entries, 5-10

N

network correction time for calls 7-7

O

organization report
current criteria listing, 8-14
detail, 3-8
summary, 3-8
organization table
access codes, *see dial access codes*
authorization code, *see carrier information*
creating during installation, B-19
dial access codes. *see telephone system configuration, editing information*
editing table, 5-2
entering during installation, B-24
hierarchy illustration, 5-3
listing directories and table, 5-12
loading ASCII file, 5-10
organization table, *continued*
moving entries, 5-7
planning setup, 2-16
site company information, 5-2
worksheet 2-28

P

password administration, 8-7
PBX/KTS interface update, 8-13
install, B-?
test selection, B-33
personnel, *see organization table*
ports
diagnostics (Intuity) 9-16
list information, 6-5
selection for MERLIN LEGEND, B-2
setup, 6-4
verify status, B-33
see also call collection

R

rate table
editing, 7-12
Installation, B-18
Reports, 3-1
account code reports, 3-11
ANI/demographic reports, 3-2
CDR analysis reports, 3-12
organization reports, 3-8
reporting uses, 3-17
samples, C-1
scheduling, 3-14
selection reports, 3-4
specifying reporting criteria, 8-3
viewing, 8-4
restoring backup data
from CAS disks, 8-9
from Intuity tapes, 8-11

S

sample reports, C-1
scheduling reports, 3-14
listing schedule, 8-14
report codes 3-15
setup planning, 2-18
system table codes, 3-15
worksheet, 2-29
selection report, 3-4
listing criteria, 8-14
setup planning
account codes, 2-23
call cost adjustments, 2-21
call record collection, 2-14
dialed digit processing 2-8, 1
hardware information, 2-2
organization configuration, 2-16
port parameters, 2-14
report scheduling, 2-18
site information, 2-4
switch information, 2-3
telephone system configuration, 2-5
site
entering name and address, 4-2
installing, 4-10, B-18
listing table, 4-11
report, 3-13
setup planning, 2-4
worksheet, 2-24
site report, 3-13
standard operating procedures
backing up/restoring CAS data, 8-7
CAS password administration in Intuity, 8-7
checking system storage (CAS), 8-13
deleting stored call records, 8-2
listing system tables (CAS), 8-14
specifying call storage criteria, 8-3
updating CAS software, 8-12
verifying system status, 8-16
viewing installed software, 8-13
viewing logs from CAS, 8-5
viewing reports, 8-4
startup, checklist (CAS), 1-13
stopping call processing, (CAS/Intuity), 9-2
switch
support by CAS,
connectivity, B-2
System 75
call record format, B-16

connectivity, B-6
verify call record format, B-17
verify active SMDR trunk groups, B-18
system tables, list all (CAS), 8-14

T

taxing calls, *see call cost adjustments*
telephone system configuration
editing information, 4-3
entering during installation, B-21
listing table, 4-11
planning setup, 2-5
worksheet, 2-25
time of day report, 3-12
trunk group busy hour report, 3-12
trunk group report, 3-12
trunk groups, *see telephone system configuration*
reports, 3-12

U

UNASSIGNED account code, *see account code*
UNATTACHED department/cost center, 5-6
unprocessed call records, 9-3
updating CAS software, 8-13
user interface (CAS), 1-8
data entry commands, 1-11
login/logoff, 1-12
using data entry screens, 1-9
using menus, 1-8
User Interface, Intuity System,1-3
entering data in fields, 1-7
field movement keys, 1-8
frame management, 1-5
function keys, 1-4
using menus, 1-7

V

viewing
logs (CAS), 8-5
reports, 8-4
installed software (Intuity), 8-17
VoiceAlarm
install, B-29
setup, 9-12
test, 9-13

W

Worksheets, CAS
account codes, 2-3
call record collection, 2-27
cost adjustments, 2-30
dialed digit processing, 2-26
organization worksheet, 2-28
report scheduling, 2-29
site information, 2-24
switch information, 2-24
telephone system configuration, 2-25