Lucent Technologies
Bell Labs Innovations

PARTNER® Advanced Communications System

Programming and Use

518-456-155
Comcode 108074519
November 1997

Copyright © 1997 Lucent Technologies
All Rights Reserved
Printed in U.S.A.
Lucent Technologies 518-456- 155
Issue 1
November 1997

Notice. Every effort was made to ensure that the information in this book was complete and accurate at the time of printing. However, information is subject to change.

Federal Communications Commission (FCC) Interference Notice. This equipment has been tested and found to comply with the limits of a Class A or a Class B digital device, pursuant to Part 15 of FCC rules. For additional information on FCC regulations, see “Federal Communications Commission (FCC) Interference Information” on the next page.

Canadian Emissions Requirements. This digital apparatus does not exceed the Class A or the Class B limits for radio noise emissions from digital apparatus set out in the Radio Interference Regulations of the Industry Canada (IC). For additional IC information, see “IC Notification and Repair Information” in this section. Le present appareil numerique n’emet pas de bruits radioelectriques depassant les limites applicables aux appareils numeriques de la classe A ou de la classe B prescrites dans le Reglement sur le brouillage radioelectrique edicte par le ministere des Industrie Canada. Vous trouverez des renseignements complémitaires dans cette section.

Security. Toll fraud, the unauthorized use of your telecommunications system by an unauthorized party (for example, persons other than your company’s employees, agents, subcontractors, or persons working on your company’s behalf) can result in substantial additional charges for your telecommunications services. You are responsible for the security of your system. There may be a risk of toll fraud associated with your telecommunications system. You are responsible for programming and configuring your equipment to prevent unauthorized use. Your system manager should read all documents provided with this product to fully understand the features that can introduce the risk of toll fraud and the steps that can be taken to reduce that risk. Lucent Technologies does not warrant that this product is immune from or will prevent unauthorized use of common-carrier telecommunication services or facilities accessed through or connected to it. Lucent Technologies will not be responsible for any charges that result from such unauthorized use. If you *suspect you are being victimized* by toll fraud and you need technical support or assistance, call the Lucent Technologies National Customer Care Center at 1 800 628-2888.

Trademarks. Magic on Hold, MERLIN, MLS-34D, MLS-18D, MLS-12D, MLS-12, MLS-6, PARTNER, PARTNER MAIL, PARTNER MAIL VS, PassageWay, and SYSTIMAX are registered trademarks of Lucent Technologies. Microsoft is a registered trademark and Windows is a trademark of Microsoft Corporation. The SoundStation is a registered trademark of Polycom, Inc.

Warranty. Lucent Technologies provides a limited warranty for this product. Refer to “Lucent Technologies Limited Warranty and Limitation of Liability” in Appendix B of this book.

Ordering Information. The order number for this book is 518-456-155. To order additional books, call 800 457-1235 or 765 361-5353. For information about ordering other system reference materials, replacement parts, accessories, and other compatible equipment, refer to “Product Ordering Information” in Appendix B.

Federal Communications Commission (FCC) Interference Information

References to FCC regulations are not applicable outside of the U.S.

Class A Compliance.

This equipment, in the 5-Slot configuration and in the 2-Slot configuration with a 308EC module or PARTNER MAIL VS, has been tested and found to comply with the limits for a Class A digital device, pursuant to Part 15 of FCC rules.

These limits are designed to provide reasonable protection against harmful interference when the equipment is operated in a commercial environment. This equipment generates, uses, and can radiate radio frequency energy and, if not installed and used in accordance with the instruction manuals, may cause harmful interference to radio communications. Operation of this equipment in a residential area is likely to cause harmful interference, in which case the user will have to correct the interference at his or her own expense.

Class B Compliance.

The Standalone PARTNER ACS processor module configuration and the 2-Slot configuration using a 200, a 206, or a 400 module have been tested and found to comply with the limits for a Class B digital device, pursuant to Part 15 of FCC rules.

These limits are designed to provide reasonable protection against harmful interference when the equipment is operated in a residential environment. This equipment generates, uses, and can radiate radio frequency energy and, if not installed and used in accordance with the instruction manuals, may cause harmful interference to radio communications.

FCC Notification and Repair Information.

This equipment is registered with the FCC in accordance with Part 68 of its rules. In compliance with those rules, you are advised of the following:

Means of Connection: Connection to the telephone network shall be through a standard network interface jack USOC RJ11C. These USOCs must be ordered from your local telephone company.

FCC compliant line cords are provided with Line and Line/Extension Modules for connecting to the telephone company provided USOC RJ11C jacks. Use only FCC compliant line cords and jacks for these connections.

This equipment may not be used with party lines or coin telephone lines.

Notification to the Telephone Companies: Before connecting this equipment, you or your equipment supplier must notify your local telephone company’s business office of the following:

- The telephone number(s) you will be using with this equipment.
- The appropriate registration number and ringer equivalence number (REN) which can be found on the right hand side of the control unit.
- The facility interface code, which is O2LS2.

You must also notify your local telephone company if and when this equipment is permanently disconnected from the line(s).

REN Information: The REN is used to determine the quantity of devices which may be connected to the same telephone line. Excessive RENs on the telephone line may result in the devices not ringing in response to incoming call. In most, but not all areas, the sum of RENs should not exceed five (5.0). To be certain of the number of devices that may be connected to a line, as determined by the total RENs, contact the local telephone company.

Repair Instructions: If you experience trouble because your equipment is malfunctioning, the FCC requires that you disconnect the equipment from the network and not use it until the problem has been corrected. Repairs to this equipment can only be made by the manufacturer, its authorized agents, or by others who may be authorized by the FCC. In the event repairs are needed on this equipment, please contact the Lucent Technologies hotline at 1 800 628-2888 or your local Authorized Dealer. For warranty information, see Appendix B.

Rights of the Local Telephone Company: If this equipment causes harm to the telephone network, the local telephone company may discontinue your service temporarily. If possible, they will notify you in advance. But if advance notice is not practical, you will be notified as soon as possible. You will also be advised of your right to file a complaint with the FCC.

Your local telephone company may make changes in its facilities, equipment, operations, or procedures that affect the proper functioning of this equipment. If they do, you will be notified in advance to give you an opportunity to maintain uninterrupted telephone service.

Hearing Aid Compatibility: All system phones are compatible with inductively coupled hearing aids as prescribed by the FCC.

Industry Canada (IC) Notification and Repair Information.

The Industry Canada (IC) label identifies certified equipment. This certification means that the equipment meets certain telecommunications network protective, operational, and safety requirements. The IC does not guarantee the equipment will operate to the user's satisfaction.

Before installing this equipment, users should ensure that is permissible to connect it to the facilities of the local telecommunications company. The equipment must also be installed using an acceptable method of connection. In some cases, the company's inside wiring for single-line individual service may be extended by means of a certified connector assembly (telephone extension cord). The customer should be aware that compliance with the above conditions may not prevent degradation of service in some situations.

Repairs to certified equipment should be made by an authorized Canadian maintenance facility designated by the supplier. Any repairs or alterations made by the user to this equipment, or any equipment malfunctions, may give the telecommunications company cause to request the user to disconnect the equipment.

Users should ensure for their own protection that the electrical ground connections of the power utility, telephone lines, and internal metallic water pipe system, if present, are connected. This precaution may be particularly important in rural areas.

CAUTION: *Users should not attempt to make such connections themselves, but should contact the appropriate electrical inspection authority or electrician, as appropriate.*

To prevent overloading, the Load Number (LN) assigned to each terminal device denotes the percentage of the total load to be connected to a telephone loop used by the device. The termination on a loop may consist of any combination of devices subject only to the requirement that the total of the Load Numbers of all the devices does not exceed 100.

- **IC Certification No:** See the label on the side of the control unit.
- **CSA Certification No: LR 60486**
- **Load No: 7**

Renseignements sur la notification du ministére des Industrie Canada et la réparation. L'étiquette du ministére des Industrie Canada identifie le matériel homologué. Cette étiquette certifie que le matériel est conforme à certaines normes de protection, d'exploitation et de sécurité des réseaux de télécommunications. Le Ministére n'assure toutefois pas que le matériel fonctionnera à la satisfaction de l'utilisateur.

Avant d'installer ce méteriel, l'utilisateur doit s'assurer qu'il est permis de le raccorder aux installations de l'entreprise locale de télécommunication. Le matériel doit également être installé en suivant une méthode acceptée de peuvent etre prolonges au moyen d'un dispositif homologue de raccordement. Dans certains cas, les fils intérieurs de l'enterprise utilisés pour un service individuel à ligne unique peuvent être prolongés au moyen d'un dispositif homologué de raccordement (cordon prolongateur téléphonique interne).

L'abonné ne doit pas oublier qu'il est possible que la conformité aux conditions énoncées ci-dessus n'empêchent pas la dégradation du service dans certaines situations. Actuellement, les entreprises de télécommunication ne permettent pas que l'on raccorde leur méteriel à des jacks d'abonné, sauf dans les cas précis prévus pas les tarifs particuliers de ces entreprises.

Les réparations de matériel homologué doivent être effectuées par un centre d'entretien canadien autorisé désigné par le foumisseur. La compagnie de télécommunications peut demander à l'utilisateur de débrancher un appareil à la suite de réparations ou de modifications effectuées par l'utilisateur ou à cause de mauvais fonctionnement.

Pour sa propre protection, l'utilisateur doit s'assurer que tous les fils de mise à la terre de la source d'énergie électrique, des lignes téléphoniques et des canalisations d'eau métalliques, s'il y en a, sont raccordés ensemble. Cette précaution est particuliérement importante dans les régions rurales.

AVERTISSEMENT: *L'utilisateur ne doit pas tenter de faire ces raccordements lui-même; il doit avoir racours à un service d'inspection des installations électriques, ou à un electrician, selon le cas.*

L'indice de charge (IC) assigné à chaque dispositif terminal indique, pour éviter toute surcharge, le pourcentage de la charge totale qui peut être raccordée a un circuit téléphonique boucié utilisé par ce dispositif. La terminaison du circuit boucié peut être constituêe de n'importe quelle combinaison de dispositifs, pourvu que la somme des indices de charge de l'ensemble des dispositifs ne dépasse pas 100.

- **No d'homolagation:** Voir l'étiquette sur le côté de l'unité de contrôle.
- **No de certification CSA: LR 60486**
- **L'indice de charge: 7**

Contents

About This Guide xvii

Purpose xvii

1 Overview 1-2

Features and Capabilities 1-2
System Components 1-4
Auxiliary Equipment 1-15

2 Programming 2-1

Overview 2-1
Hardware Considerations 2-2
Initial System Setup 2-4
Changing Settings after Installation 2-8
Changing Settings to Support PBX or Centrex Services 2-11
System Programming Options 2-12
Using System Programming 2-21
Upgrading from PARTNER ACS Release 1.0 to Release 1.1 or Release 2.0 or Later 2-28
Telephone Programming Options 2-29
Using Telephone Programming 2-33

3 Learning About Telephones 3-1

System Telephones 3-1
Standard Telephones 3-11
Combination Extensions 3-15
Using Telephones 3-16

Contents

4 Using Auxiliary Equipment 4-1

Overview 4-1
Answering Machines 4-4
Auto Attendant 4-9
Call Reporting Devices (SMDR) 4-10
Contact Closure Devices 4-14
Credit Card Scanners 4-15
Fax Machines 4-16
Modems 4-23
Night Service with Auxiliary Equipment 4-25
Voice Messaging Systems 4-27

5 Feature Reference 5-1

Overview 5-1
Numerical Listing of Procedure Codes and Dial Codes 5-3
AA (Automated Attendant) Extensions (#607) 5-6
Abbreviated Ringing (#305) 5-7
Account Code Entry (F12) 5-8
Allowed List Assignments (#408) 5-12
Allowed Phone Number Lists (#407) 5-13
Answering Calls 5-16
Auto Dialing 5-19
Automatic Extension Privacy (#304) 5-22
Automatic Line Selection 5-24
Automatic System Answer Button (#111)—Release 2.0 or Later 5-27
Automatic System Answer Delay (#110)—Release 2.0 or Later 5-30
Automatic System Answer Lines (#204)—Release 2.0 or later 5-32
Automatic System Answer Mode (#121)—Release 2.0 or Later 5-34
Automatic System Answer Record/Playback (I891) —Release 2.0 or Later 5-36

Contents

Automatic VMS Cover (#310) 5-39
Background Music (F19) 5-41
Backup Programming—Automatic (#123) 5-43
Backup Programming—Manual (#124) 5-46
Call Coverage (F20,XX,XX) —Release 2.0 or Later 5-48
Call Coverage Rings (#116)—Release 2.0 or Later 5-52
Call Forwarding/Call Follow-Me (F11,XX,XX) 5-53
Call Park 5-56
Call Pickup (I6XX) 5-58
Call Waiting (#316) 5-60
Caller ID 5-62
Caller ID Inspect (F17) 5-65
Caller ID Log Answered Calls (#317)—Release 2.0 or Later 5-67
Caller ID Call Log Line Association (#318)—Release 2.0 or Later 5-69
Caller ID Call Logging and Dialing (F23)—ACS Release 2.0 or Later 5-71
Caller ID Name Display (F16) 5-76
Caller ID Type (#122) 5-77
Calling Group Extensions (#502) 5-79
Conference Calls 5-81
Conference Drop (F06) 5-83
Contact Closure (F41 and F42) 5-84
Contact Closure Group (#612) 5-86
Contact Closure Operation Type (#613) 5-88
Copy Settings (#399) 5-90
Dial Mode (#201) 5-92
Direct Extension Dial Button (#113)—Release 2.0 or Later 5-93
Direct Extension Dial Delay (#112)—Release 2.0 or Later 5-96
Direct Extension Dial Lines (#205)—Release 2.0 or Later 5-98
Direct Extension Dial Record/Playback (I892)—Release 2.0 or Later 5-100
Direct Line Pickup—Active Line (I68LL) 5-103

Contents

Direct Line Pickup—Idle Line (I8LL) 5-105
Disallowed List Assignments (#405) 5-107
Disallowed Phone Number Lists (#404) 5-109
Display 5-112
Display Language (#303) 5-114
Distinctive Ring (#308) 5-115
Do Not Disturb (F01) 5-116
Doorphone Alert Extensions (#606) 5-118
Doorphone Extension (#604 and #605) 5-120
Emergency Phone Number List (#406) 5-122
Exclusive Hold (F02) 5-124
Extension Name Display 5-126
External Hotline (#311) 5-128
Fax Machine Extensions (#601) 5-132
Forced Account Code Entry (#307) 5-133
Forced Account Code List (#409) 5-135
Group Call Distribution (#206) 5-138
Group Calling—Ring/Page (I7G/I*7G) 5-140
Group Hunting—Ring/Voice Signal (I77G/I*77G) 5-144
Group Pickup (I66G) 5-148
Hold 5-150
Hold Disconnect Time (#203) 5-152
Hotline (#603) 5-154
Hunt Group Extensions (#505) 5-156
Intercom Dial Tone (#309) 5-158
Joining Calls 5-159
Last Number Redial (F05) 5-161
Line Access Mode (#313) — Release 2.0 or later 5-163
Line Access Restriction (#302) 5-165
Line Assignment (#301) 5-167
Line Coverage Extension (#208) 5-171
Line Ringing 5-173
Loudspeaker Paging (I70) 5-175
Making Calls 5-177
Manual Signaling (F13XX or F13*XX) 5-182
Message Light Off (F10XX) 5-184
Message Light On (F09XX) 5-186
Music On Hold (#602) 5-188

Contents

Music On Hold Volume (#614) 5-190
Night Service Button (#503) 5-191
Night Service Group Extensions (#504) 5-194
Number of Lines (#104) 5-196
Outgoing Call Restriction (#401) 5-198
Outgoing Call Restriction Button (#114) 5-200
Outside Conference Denial (#109) 5-203
Personal Speed Dial Numbers 5-204
Pickup Group Extensions (#501) 5-207
Pool Access Restriction (#315)— Release 2.0 or Later 5-209
Pool Extension Assignment (#314) — Release 2.0 or Later 5-211
Pool Line Assignment (#207) —Release 2.0 or Later 5-214
Privacy (F07) 5-216
Recall (F03) 5-218
Recall Timer Duration (#107) 5-220
Restore Programming (#125) 5-222
Ring on Transfer (#119) 5-225
Rotary Dialing Timeout (#108) 5-226
Save Number Redial (F04) 5-227
Send All Calls 5-229
Simultaneous Paging (I*70) 5-231
SMDR Output Format (#610) 5-233
SMDR Record Type (#608) 5-235
SMDR Talk Time (#611) —Release 2.0 or Later 5-237
SMDR Top of Page (#609) 5-239
Special Dialing Functions 5-240
Star Code Dial Delay (#410) 5-242
Station Lock (F21) 5-245
Station Unlock (F22) 5-248
System Date (#101) 5-249
System Day (#102) 5-250
System Password (#403) 5-251
System Release Status (F59) 5-252
System Reset—Programming Saved (#728) 5-253
System Speed Dial Numbers 5-255

Contents

System Time (#103) 5-258
Toll Call Prefix (#402) 5-259
Touch-Tone Enable (F08) 5-260
Transfer Return Extension (#306) 5-261
Transfer Return Rings (#105) 5-263
Transferring Calls 5-265
VMS Cover (F15) 5-269
VMS Cover Rings (#117) 5-271
VMS Hunt Delay (#506) 5-272
VMS Hunt Schedule (#507) 5-273
Voice Interrupt On Busy (#312) 5-274
Voice Interrupt On Busy Talk-Back (F18) 5-276
Voice Mailbox Transfer (F14) 5-278
Wake Up Service Button (#115) 5-280

6 Troubleshooting 6-1

Customer Self Service Center on the Internet 6-1
When You Need Help 6-2
Power Failure Operation 6-2
Battery Replacement 6-3
Clearing a Backup-Failure Alarm 6-7
Problems with System Phones 6-8
Problems with Standard Phones 6-13
Other Problems with Phones 6-16
Problems with Combination Extensions 6-23
Problems with Standard Devices 6-24
Problems with Automatic Backup 6-25
Problems with Manual Backup 6-27
Problems with System Restore 6-29
System Problems 6-31
Other Problems with System 6-34

Contents

A **Specifications** A-1

B **Maintenance, Repair, and Ordering Information** B-1

Maintenance B-1
Repair Information B-1
Lucent Technologies Limited Warranty and Limitation of Liability B-2
Product Ordering Information B-4

C **Speed Dial Form** C-1

Speed Dial Form C-1

D **Programming Mixed Telephone Types** D-1

Overview D-1

GL **Glossary** GL-1

IN **Index** IN-1

Programming Quick References

Contents

About This Guide

Purpose

This guide is intended for the System Manager. It explains what Releases 1.0, 1.1, and 2.0 of the PARTNER® Advanced Communications System (ACS) can do, provides instructions for programming and using the system, and tells how to get the most out of the system's many features and capabilities. The descriptions apply to all releases unless specifically identified as features available with Release 1.1 and Release 2.0 or with Release 2.0 only.

Terminology

Throughout this guide, the PARTNER Advanced Communications System is referred to simply as the *system* and Lucent Technologies telephones specifically designed to work with the system are called *system phones*. You can also use industry-standard telephones with the system, which are referred to as *standard phones* in this guide. Finally, the PARTNER MAIL VS® or PARTNER MAIL® Voice Messaging System, which you may have connected to the system, is referred to as the *voice messaging system*.

How to Use This Guide

For information about the following topics, refer to the appropriate chapter:

- ***Getting Acquainted.*** Chapter 1 provides an overview of system features and hardware components.

- ***Programming the System.*** You can change your system's settings easily to accommodate new or expanding needs. Chapter 2 provides general programming information, while Chapter 5 provides detailed instructions for programming specific system features.
- ***Training Co-Workers.*** Chapter 3 explains how system and standard phones work with the system. To help train co-workers on telephone basics, you can share this information with them.
- ***Using Auxiliary Equipment.*** The system supports a wide variety of auxiliary equipment, including fax machines, modems, voice messaging systems, and call reporting devices. Chapter 4 provides advice on setting up these devices to work effectively with the system.
- ***Daily Operation.*** Depending on how your system is set up, you may need to oversee some of the system's daily operations. For example, you may need to turn on Night Service at the end of each day before leaving the office. Reference information about all features, including descriptions and instructions for using each feature, is provided in Chapter 5.
- ***Solving Problems.*** Chapter 6 provides information about solving problems if your system or telephones malfunction.

Once you are experienced with the system, use the Table of Contents or Index to locate the information you need.

Throughout this guide, feature names are printed in **bold**—for example, **System Date (#101)**. Chapter 5, "Feature Reference" provides comprehensive information about each feature, with the features arranged in alphabetical order. For example, if you see a reference to **System Date (#101)**, you can look it up in Chapter 5 for details.

Product Safety Statements

Product safety statements are identified in this guide by a: ⚠ .

⚠ **CAUTION:**
Indicates the presence of a hazard that will or can cause minor personal injury or property damage if the hazard is not avoided.

⚠ **WARNING:**
Indicates the presence of a hazard that can cause severe or fatal personal injury if the hazard is not avoided.

How to Comment on This Guide

A feedback form is located at the end of this guide, after the appendixes. If the form is missing, send your comments and recommendations for changes to Publications Manager, Lucent Technologies, 211 Mount Airy Road (Room 2W-226), Basking Ridge, NJ 07920 (FAX 1 908 953-6912).

Important Safety Instructions

WARNING:

The following list provides basic safety precautions that should always be followed when using your telephone equipment:

1. **Read and understand all instructions.**
2. **Follow all warnings and instructions marked on the product.**
3. **Unplug all telephone connections before cleaning. DO NOT use liquid cleaners or aerosol cleaners. Use a damp cloth for cleaning.**
4. **This product should be serviced by (or taken to) a qualified repair center when service or repair work is required.**
5. **DO NOT use this product near water, for example, in a wet basement location.**
6. **DO NOT place this product on an unstable cart, stand, or table.**
7. **Never push objects of any kind into slots or openings as they may touch dangerous voltage points or short out parts that could result in a risk of fire or electric shock. Never spill liquid of any kind on the product.**
8. **DO NOT use the telephone to report a gas leak in the vicinity of the leak.**
9. **The product is provided with a three-wire grounding type plug. This is a safety feature. DO NOT defeat the safety purpose of the grounding type plug. DO NOT staple or otherwise attach the power supply cord to building surfaces.**

CAUTION:

DO NOT block or cover the ventilation slots or openings. They prevent the product from overheating. DO NOT place the product in a separate enclosure unless proper ventilation is provided. DO NOT place the product flat on a surface. The control unit must be wall-mounted.

SAVE THESE INSTRUCTIONS

Overview

1

Features and Capabilities

The following list provides an overview of the system's features. The features apply to all releases of PARTNER® ACS unless specified otherwise.

- Full line of system phones, some with displays showing date, time, and programming and feedback messages. All system phones provide access to multiple outside lines and system features.
- Programmable buttons on system phones, providing one-touch access to system features simply by pressing the button.
- Intuitive operation of basic call handling capabilities including transfer, conference, and hold.
- Intercom (inside) calling to other system extensions using an Intercom button and the two-digit number assigned to the extension. Users can either ring or voice signal an idle system phone; use Voice Interrupt On Busy to signal another user who is active on a call; or manually signal to audibly alert another predetermined extension.
- Grouping of extensions for flexibility in directing and answering calls.
- Integrated voice messaging support with the PARTNER MAIL VS system or PARTNER MAIL system, so callers can reach a desired extension or group without operator assistance and leave messages at unanswered or busy extensions.
- PARTNER Voice Messaging PC Card provides a voice messaging service as well as effective solutions for after-hours call answering and back-up for the receptionist. (Available with Release 1.1 or later.)
- Caller ID support on system display phones (if Caller ID service is available from your local telephone company and you subscribe to it).
- Power failure operation with standard phones, allowing you to make and receive calls during a power failure while retaining programmed equipment settings for up to four days. (An optional Uninterruptible Power Supply, or UPS, is also available to allow full equipment operation during a power failure.)

- Centrex or PBX operation support—including one-touch dialing of feature access codes on system phones.
- Flexible dialing restrictions and permissions so you can control telephone activity and phone bills.
- Special hospitality features that let Bed-and-Breakfast proprietors, for example, regulate phone use in guest rooms and schedule wake-up calls for guests.
- Easy-to-use programming procedures, making it simple for you to manage your system and telephones. System display phones provide messages and prompts during programming.
- Two system-programming extensions, allowing you to program the system from one extension without interrupting call activity at the other programming extension—usually the receptionist's extension.
- Modular connections to the control unit, making it easy to reconfigure your system or to add lines and/or extensions as your business grows.
- Direct connections for industry-standard devices—including most standard phones, fax machines, answering machines, modems, and credit card scanners.
- Optional equipment support, including doorphones, Contact Closure Adjunct (for example, to release a door lock), loudspeaker paging systems, music on hold*, call reporting (often referred to as Station Message Detail Recording (SMDR) devices, auto attendants, extra alerts, and PC Cards for Backup/Restore or for software upgrades.

Features Available with Release 2.0 or Later

- Automatic System Answer feature to help answer and route calls.
- Direct Extension Dial feature to allow callers to dial an extension or help group directly without the aid of the receptionist.
- Line Pooling to create up to four groups, or pools, of multiple outside lines. When users access a pool to make a call, the system selects an available line from the pool.
- Call Coverage for users who are unable to answer their calls, but want their calls answered by another individual.
- Caller ID Logging and Dialing feature for users to view the names and numbers of logged calls from system phones. Users can press the Dial option to automatically dial the caller's number.

---

* The performance of music over telephone lines is a public performance under United States Copyright law. Accordingly, in order for the performance of that music to be lawful, it must be licensed annually to the user by the copyright owners or their representatives. One way to obtain permission is to contact ASCAP, BMI, and/or similar performing rights organizations, to obtain a license. Or, you can purchase a Magic on Hold® system, which includes the required license for the first year. This license must be renewed annually. by the copyright owners or their representatives.

- SMDR Talk Time to allow you to track on an SMDR call report the length of time that users talk on incoming outside calls.

System Components

Modular hardware design makes the system easy to install and expand. The basic system consists of a PARTNER ACS processor module, which supports three lines and eight extensions. Using these lines and extensions, you can add various optional devices and telephones to configure your system to meet your needs. To expand the system to include more lines and extensions, simply attach additional modules and a carrier to contain them. The term control unit is used to refer to the standalone PARTNER ACS processor module (or to the carrier and the modules it contains), since this is the heart of the system. Figure 1-1 shows an example of system components.

WARNING:

There are no customer-serviceable components inside the system modules or carrier. There are hazardous voltages within that can cause severe or fatal personal injury. DO NOT OPEN THE MODULES.

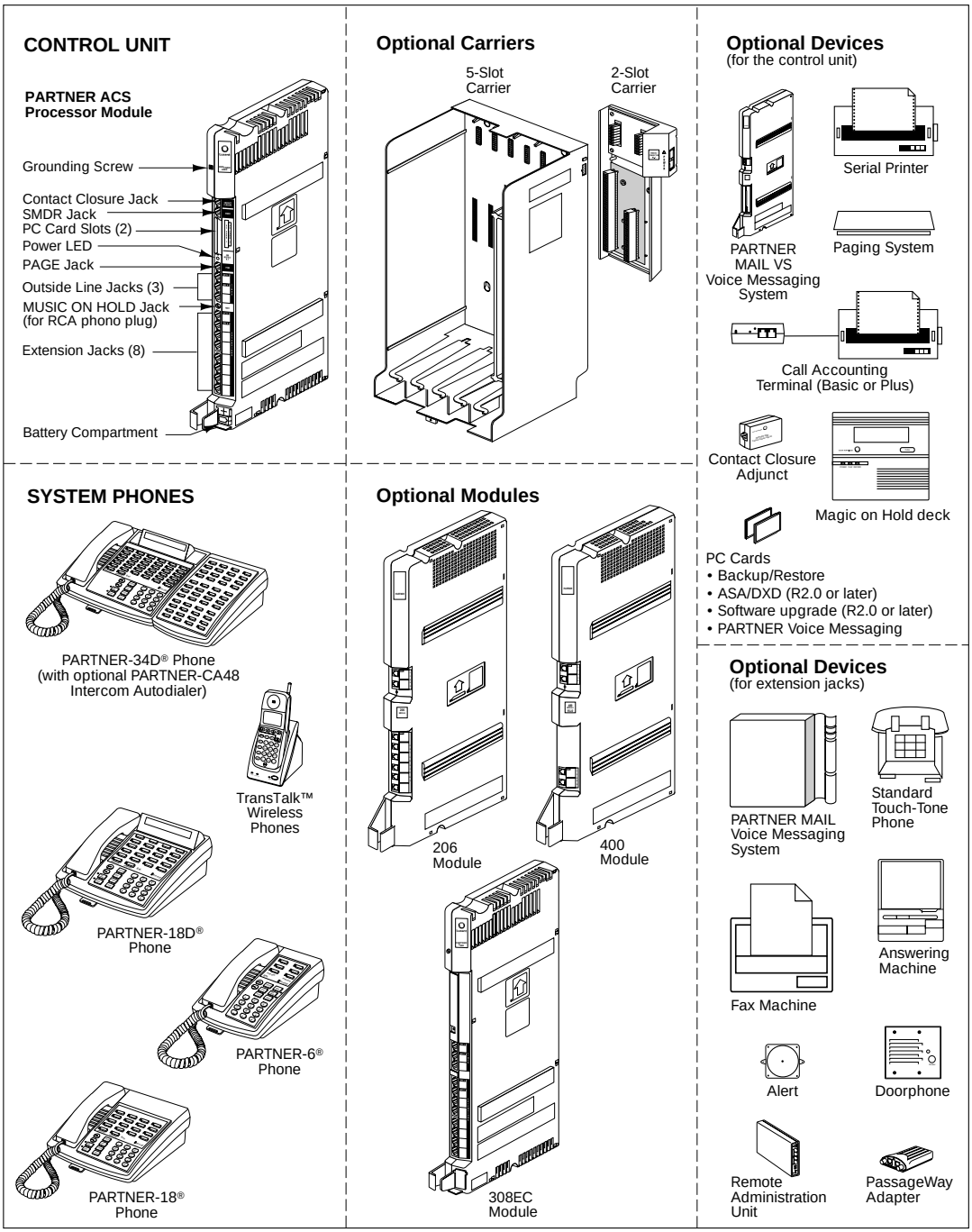

Figure 1-1. Sample System Components

Configurations

The system can have one of three basic configurations, all of which must be wall-mounted:

- standalone PARTNER ACS processor module. This configuration does not use a carrier.
- 2-Slot carrier, which can hold up to two modules. The PARTNER ACS processor module resides in the leftmost slot.
- 5-Slot carrier, which can hold up to five modules. The PARTNER ACS processor module resides in the center slot. This carrier includes a cover.

In either carrier, one and only one of the modules must be a PARTNER ACS processor module. The modules slide into the carrier, which channels power to the system.

System Modules

The following system modules can be installed in your system:

- **PARTNER ACS Processor Module** provides the software intelligence that controls the system's features. It has jacks for three outside lines, eight extensions, a music-on-hold audio source, a loudspeaker paging system, a grounding screw, a Contact Closure Adjunct, and a call reporting (SMDR) device, such as a printer. It also has two PC Card slots, a bicolor red and green light-emitting diode (LED), and two AAA user-replaceable batteries. The module also provides support for Caller ID information on system display phones. The system requires one PARTNER ACS processor module.
- **200 Module** has two outside line jacks, but no extension jacks. This module is an inexpensive way to add lines when you do not need more extensions.
- **206E Module** has jacks to connect a maximum of two outside telephone lines and six extensions to the system. You can connect telephones and other telecommunications devices (such as fax machines and modems) to the extension jacks (either directly or through your building's modular wall jacks). Each 206E module has a green power indicator that shows it is receiving power.
- **400E Module** is similar to the 206EC module but without extension jacks. It has four outside line jacks. Like the 200 module, this module is an inexpensive way to add lines when you do not need more extensions.
- **206EC/400EC Modules** provide the same capabilities as the 206E and 400E modules, respectively, but add support for Caller ID information on system display phones. To get Caller ID, first you must subscribe to the service from your local phone company (if it is available) on a per-line basis, then connect those lines associated with Caller ID to the line jacks

on the 206EC and/or 400EC modules. Any users with system display phones who receive calls on Caller ID lines will get Caller ID. For more information, see "Caller ID" on page 5-62.

- **308EC Expansion Module** (release 2.0 or later) provides expanded line and extension capability. It has jacks for three outside lines and eight extensions. Using combinations of modules, you can have a maximum of 40 extensions with 15 lines (one ACS processor module and four 308EC modules) or 19 lines with eight extensions (one ACS processor module and four 400 modules). To get Caller ID, first you must subscribe to the service from your local phone company (if it is available) on a per-line basis, then connect those lines associated with Caller ID to the line jacks on the 206EC, 308EC, and/or 400EC modules. Any users with system display phones who receive calls on Caller ID lines will get Caller ID. For more information, see "Caller ID" on page 5-62.

Hereafter, references to 206 modules include 206E, 206EC, and all 206 modules used with previous releases of the PARTNER product line. Similarly, references to 400 modules include 400E, 400EC, and all 400 modules used with previous releases of the PARTNER product line. Any 200 modules can also be used.

If you want message-waiting capability on standard phones that are equipped with LED-compatible message-waiting lights, you must connect those phones to extension jacks on a PARTNER ACS processor module, a 308EC module, or on Release 3.1 (R3.1) or later 206 modules.

Table 1-1. Summary of Module Capacities

Module	Lines	Extensions
308EC	3	8
200	2	0
206	2	6
400	4	0
ACS	3	8

System Batteries

The system uses two user-replaceable AAA-size standard alkaline batteries in the PARTNER ACS processor module to ensure that system programming and telephone programming settings are not lost in case of a power failure. See Chapter 6, "Troubleshooting" for instructions for replacing the batteries.

PC Card Slots

The PARTNER ACS processor module has two PCMCIA (Personal Computer Memory Card International Association) interface slots (hereafter referred to as

PC Card slots). You can buy PC Cards to use in these slots for the following purposes:

- Use a Backup and Restore PC Card to backup or restore telephone and system programming.
- Upgrade from PARTNER ACS Release 1.0 to Release 1.1 or Release 2.0 or later using a PC Upgrade card. After powering down the system, you insert the PC Upgrade Card and turn the power back on. While the system upgrades, the bicolor (red/green) power LED on the processor flashes green and red alternately. When the upgrade is finished (in about 20 seconds), the power LED becomes steady green. All of your system and extension programming will be saved and ready to work with the new release.
- Use a PC Card to store Automatic System Answer and Direct Extension Dial messages. You can insert the card in either PC Card Slot 1 or PC Card Slot 2 of the ACS Processor Module Release 2.0 or later.
- For Release 1.1 and 2.0 or later, use a PARTNER Voice Messaging PC Card to provide messaging features (store personal greeting and store and retrieve callers' messages) for up to four mailboxes.

For information on installing PC Cards, "*PARTNER ACS PC Card Installation Instructions*."

System Capacity

The PARTNER ACS release you have, the carrier you use and the combination of modules installed determine the number of available lines and extensions:

- For **PARTNER ACS Release 1.0 and 1.1**, the carrier you use and the combination of 206 and 400 modules installed determine the number of available lines and extensions. The system allows up to 15 lines and up to 32 extensions; however, these maximums cannot be achieved simultaneously:

Table 1-2. Configurations for Maximum Lines or Maximum Extensions for Release 1.0 and Release 1.1

Configuration	Maximum Lines	Maximum Extensions
standalone	PARTNER ACS processor module M (Total = 3 lines, 8 extensions) D	PARTNER ACS processor module M (Total = 8 extensions, 3 lines) D
2-Slot Carrier	One PARTNER ACS processor module One 400 module **(Total = 7 lines, 8 extensions)**	One PARTNER ACS processor module One 206 module **(Total = 14 extensions, 5 lines)**
5-Slot Carrier	One PARTNER ACS processor module Two 206 modules Two 400 modules **(Total = 15 lines, 20 extensions)**	One PARTNER ACS processor module Four 206 modules **(Total = 32 extensions, 11 lines)**

- For **PARTNER ACS Release 2.0**, the system allows up to 19 lines and up to 40 extensions; however, these maximums cannot be achieved simultaneously.

Table 1-3. Configurations for Maximum Lines or Maximum Extensions for Release 2.0

Configuration	Maximum Lines	Maximum Extensions
Standalone	PARTNER ACS processor module (Total = 3 lines, 8 extensions M) D	PARTNER ACS processor module (Total = 8 extensions, 3 lines)
2-Slot Carrier	One PARTNER ACS processor module One 400 module (Total = 7 lines, 8 extensions)	One PARTNER ACS processor module One 308EC module (Total = 16 extensions, 6 lines)
5-Slot Carrier	One PARTNER ACS processor module Four 400 modules (Total = 19 lines, 8 extensions)	One PARTNER ACS processor module Four 308EC modules (Total = 40 extensions, 15 lines)

NOTE:
If you want to install a VS module, keep in mind that it will require one of the slots in the carrier, which reduces the system line and extension capacity.

System Mode

The system supports two modes of operation. The mode of operation determines how users access outside lines from their phones:

- ***Key Mode.*** Users access individual outside lines to make and receive calls.
- ***Hybrid Mode.*** Users can access individual outside lines as in Key mode. However, you also can create up to four groups, or *pools,* of multiple outside lines. When the user accesses a pool to make a call, the system selects an available line from the pool. Since multiple lines are associated with the pool, the user does not know which line within the pool is being used to make the call.

System mode is determined by the configuration of the processor module. By default, the system is configured for Key mode. Changing to Hybrid mode requires modifying the processor module. *Only Lucent Technologies Authorized Personnel can modify the processor module to accommodate Hybrid mode.*

The mode for your system must be decided upon before installation; and in the continental U.S., the mode must be registered with the Federal Communications Commission (FCC) (see "FCC Registration" later in this section).

Key Mode

When the system operates in Key mode, individual outside lines are assigned to users' extensions for making and receiving calls. At extensions with system phones, each individual line (Line 1, Line 2, Line 3, etc.) assigned to the extension is represented by its own line button. Users can press any of the available line buttons on their system phones to make outside calls. (Standard phone users must dial 9 at intercom dial tone to make an outside call since their phones do not have line buttons.)

Key mode enables users to easily join calls since each line button can be labeled using a unique line number. For example, if you are requested to join a call on Line 2, you simply press the line button labeled "Line 2." Key mode also lets users monitor call activity using the lights next to the line button—everyone who has a specific line assigned to their extension can tell when an incoming call is ringing on that line, when a call on that line is on hold, and when that line is in use.

At installation, the system assigns outside lines to the buttons on all system phones from left to right, starting with the bottom row of buttons. On an extension basis, you can change which lines are assigned and which buttons are used to select the lines, if desired.

All extensions in a system configured for Key mode are referred to as *key extensions*.

Hybrid Mode

Hybrid mode offers users flexibility in accessing outside lines from their phones. As in Key mode, individual lines can be assigned to system extensions. Additionally, multiple outside lines can be grouped together in *pools*. The system can have up to four pools, including a *main* pool and three *auxiliary* pools. Each pool is identified by a *pool access code* —880, 881, 882, and 883 respectively.

Pools are represented on system phones by *pool buttons.* Unlike line buttons, pool buttons give users access to *multiple* lines from a single button. Each auxiliary pool is associated with only *one* pool button. Since the main pool typically contains most of your company's outside lines, it is associated with *two* pool buttons. This setup allows the user to place a call using one of the main pool buttons, put that call on hold, and make another call using the second main pool button. Or, the user can establish a conference call using lines in the main pool. The main pool and each auxiliary pool can be assigned to an extension, for a maximum of five pool buttons.

System phone users can press any of the available pool buttons on their phones or they can enter the pool access code at intercom dial tone to make an outside call. (Standard phone users must dial 9 or enter the pool access code at intercom

dial tone to access a pool since their phones do not have pool buttons.) After the user presses a pool button or enters a pool access code, the system selects a free line from the pool for the user to make the call. A user can access a pool as long as there is at least one available line in the pool.

A major benefit of Hybrid mode is that it allows users who have system phones with fewer buttons to have access to multiple outside lines and various types of pools. You can make efficient use of outside lines by grouping those of a similar type or function together. For example, you can create an auxiliary pool of WATS or international lines and assign the pools to different groups of users. Additionally, individual lines can be assigned to a manager's extension so that he or she always has access to an outside line.

In Hybrid mode, extension 10 *always* operates like an extension in Key mode. This means that every outside line in the system is associated with a specific line button at extension 10.

All other extensions can be set up with access to only lines, only pools, or a combination of lines and pools:

- Those extensions that have pool buttons, even if they also have individual line buttons, are called *pooled extensions.*
- Those extensions that have only line buttons (including extension 10) are called *key extensions.* Key extensions cannot access pools.

If your system is configured for Hybrid mode, keep in mind:

- A line can be assigned to only one pool.
- Individual extensions can be restricted access to specific pools.
- Individual lines can be assigned to an extension with pool buttons as long as the lines are not part of any pool.

At installation, the system assigns all outside lines to the main pool and assigns the main pool to the two leftmost buttons on the bottom row of all system phones, except extension 10. If desired, you can remove some of the lines from the main pool and create auxiliary pools. Then you can assign pools and/or individual lines on a per extension basis.

FCC Registration

In the continental U.S., your system's mode of operation must be registered with the FCC as either KF (Key Function) for Key or MF (Multifunction) for Hybrid. If the system is registered as KF, no outside lines can be pooled; if the system is registered as MF, lines can be pooled and individual lines also can be assigned directly to line buttons.

Telephones

System Telephones

This guide refers to Lucent Technologies telephones specifically designed to work with the system as system phones. These include the PARTNER-34D, PARTNER-18D, PARTNER-18, and PARTNER-6 telephones. You can also use MLS-34D, MLS-18D, MLS-12D, MLS-12, MLS-6, MLC-6, and the TransTalk© 9000-series wireless phones, including MDW 9000, MDW 9010, and MDW 9030P Pocketphone, although they are not discussed in this guide. For information about an MLS-model, MLC-model, or TransTalk 9000-series phone, refer to the documentation that came with the phone.

System phones have several buttons in common: volume control buttons and the F1582 (Feature), (Conf), (Transf), (Hold), (Mic/HFAI) and (Spkr) buttons. In addition, each phone has *programmable buttons* that can be used for outside lines, pools, extension numbers, outside phone numbers, or system features. Outside lines and pools, as well as some system features, require buttons with status lights. Programmable buttons without lines or pools assigned to them can be programmed with numbers or features, so you can use the feature or dial the number with one touch. The number in each PARTNER-model name indicates the number of programmable buttons with status lights and two (Intercom) buttons.

If the PARTNER-model phone has a display, indicated by a “D” in the model name, users receive messages and prompts when making calls and when programming. (More information about the display is provided in Chapter 5.) A system display phone is *required* for system programming.

Valid system extensions depend on which release of PARTNER ACS you have. Release 1.X extensions are 10 - 41. Release 2.x extensions are 10 - 49. Throughout this guide, all references to “system extensions” are within these release-dependent ranges.

Valid system lines also depend on which release of PARTNER ACS you are using. With System 1.X system line capacities are 01 to 15. With Release 2.0 or later, system line capacities are 01 to 19. Throughout this guide all references to “system lines” are within these release-dependent ranges.

Table 1-4 summarizes PARTNER-model system phone features.

Table 1-4. PARTNER-Model System Phones

	PARTNER-34D	PARTNER-18D	PARTNER-18	PARTNER-6
Total Number of Programmable Buttons with Status Lights	32	16	16	4
Total Number of Programmable Buttons without Status Lights	4	4	0	0
Key Mode Line Button Capacity (Number of Programmable Buttons with StatusLights)	24	16	16	4
Hybrid Mode Pool Button Capacity*	5	5	5	4
Line Capacity	19†	16‡	16**	4
Intercom Buttons	2	2	2	2
Display	✔	✔	—	—
Speakerphone	✔	✔	✔	✔

* The main pool uses two buttons.

† Since the system supports a maximum of 19 lines, when the system is configured for the maximum number of lines, you can use up to 19 buttons on these phones for outside lines.

‡ The system supports a maximum of 19 lines; when the system is configured for the maximum number of lines, you can use up to 16 buttons on these phones for outside lines.

Intercom Autodialers

PARTNER-model system phones support the PARTNER-CA48 Call Assistant Intercom Autodialer at extensions 10 and 11. The autodialer provides Auto Dial buttons for all of the extensions in your system. The status lights next to each button also indicate calling activity at that extension. Users can program the Auto Dial buttons for either intercom ringing, voice signaling, or manual signaling. (Note that each user can have only one Auto Dial button—either on the system phone or on the autodialer—for another extension in the system.) The Auto Dial buttons

allow the user to dial, signal, or transfer calls to system extensions with one touch. For more information about Auto Dial buttons, see "Auto Dialing" on page 5-19.

Standard Telephones

You can also use industry-standard single-line rotary or touch-tone telephones, including feature phones with built-in feature buttons and lights, with the system. This guide refers to such telephones as *standard phones*. Lucent Technologies-certified standard phones are recommended.

The following Lucent Technologies phones can make use of the system's message-waiting capability:

- 2500 YMGL Single-Line Analog Telephone Set
- 8101 Analog Telephone
- 8101M Analog Telephone *(This model is recommended.)*
- 8102 Analog Telephone
- 8110 Analog Telephone
- 7102 Plus Analog Voice Terminal

Check with your local Lucent Technologies Representative or local Authorized Dealer to find out whether other standard phones with message-waiting lights will work.

NOTE:
For message waiting capability, you must connect standard phones with LED-compatible message-waiting lights to a PARTNER ACS processor module, 308EC module, or to Release 3.1 (R3.1) or later 206 modules. This message-waiting capability does not work with standard phones with neon-type message-waiting lights.

Auxiliary Equipment

You can connect many types of telecommunications devices to your system without expensive adapters or additional phone lines—for example, answering machines, credit card scanners, and fax machines. Many industry-standard, single-line devices will work with the system regardless of the manufacturer.

For more information, refer to the list in Chapter 4 or contact your Lucent Technologies Representative or local Authorized Dealer. Also, see Chapter 4 for advice on setting up auxiliary equipment to work effectively with the system.

Requirements

An industry-standard device must meet the following conditions:

- It must be nonproprietary. That is, it cannot be made specifically for use on a particular telephone system. (For example, you cannot connect a Lucent Technologies MERLIN LEGEND® Communication System phone, because it is specifically designed for use on a MERLIN LEGEND Communication System.)
- Its Ringer Equivalence Number (REN*) cannot be greater than 2.0. (The REN is shown on a label on the device, usually on the bottom.)
- You can connect a standard two-line device to the system, but for best results it should be installed and used as if it were a single-line device.

Connecting Standard Devices

You can connect a standard device so that it is on an extension by itself, or so that it shares an extension with another piece of equipment (either another standard device or a system phone) as long as the REN of the two devices together does not exceed 2.0. (System phones have 0.0 REN.) For example, you can connect a standard phone and an answering machine to the same extension. An extension with two devices connected to it is called a *combination extension*. You cannot connect two system phones on one extension. The *PARTNER Advanced Communications System Installation* guide provides installation instructions.

* REN is a measure of the power it takes to ring a phone. The typical home phone line supports 4.0–5.0 RENs; each extension jack in your system handles up to 2.0 RENs.

Programming

2

Overview

After the system hardware is installed, you can customize the system and individual telephones. This chapter explains how to use *programming* to accomplish that.

There are two types of programming:

- ***System Programming*** allows you to customize the system to meet the needs of your business. When the system is first installed, it uses factory settings that reflect the most commonly used options. You can change system settings as needed.

  You can perform System Programming from either extension 10 or 11. Because an extension cannot be in programming mode and handle calls at the same time, consider using extension 11 for programming. Doing so gives you the ability to program without disrupting call handling by the receptionist at extension 10.

- ***Telephone Programming*** allows telephones to be customized to meet individual users' needs. Individual telephones can be programmed either from extension 10 or 11 *(Centralized Telephone Programming),* or from a user's extension using a system phone *(Extension Programming)*.

A system display phone is *required* for System and Centralized Telephone Programming. If you have any 34-button phones in the system, you must use a 34-button display phone to program since an 18-button phone *cannot* be used to program a 34-button phone. Also, if your system has both PARTNER-model and MLS-model phones, it is recommended that you use a PARTNER-model display phone at the programming extension.

The system permits programming from a remote location using a Remote Administration Unit—see "Remote Programming" on page 2-27.

This chapter provides general information about programming procedures. When a specific feature name is used, it is printed in **bold** type. For detailed descriptions and step-by-step instructions, refer to that name in Chapter 5. (A Programming Quick Reference is provided at the end of this book.)

Hardware Considerations

Programming procedures use line and extension numbers. The line number represents the line jack on a 206, 308EC, or 400 module or an ACS processor module to which the outside line is connected. Similarly, the extension number represents the extension jack on a 206 or 308EC module or an ACS processor module to which the system phone or standard device is connected.

For each 206 module, the system assigns two lines and six extensions; for the 308EC or ACS processor module, the system assigns three lines and eight extensions; for each 400 module, the system assigns four lines. The system numbers lines and extensions consecutively from left to right in a 2-Slot carrier, beginning with the ACS processor module in the leftmost slot; in a 5-Slot carrier, the numbering also begins with the ACS processor module (in the center slot), and then moves to the *leftmost* module and continues consecutively from left to right.

Figure 2-1 shows the numbering scheme for a PARTNER ACS standalone configuration, for a 2-Slot carrier, and for a 5-Slot carrier, each with the system configured for maximum *lines*. Figure 2-2 shows the numbering scheme for a PARTNER ACS standalone configuration, for a 2-Slot carrier, and for a 5-Slot carrier, each with the system configured for maximum *extensions*. However, your system can have any number of lines or extensions up to the maximum.

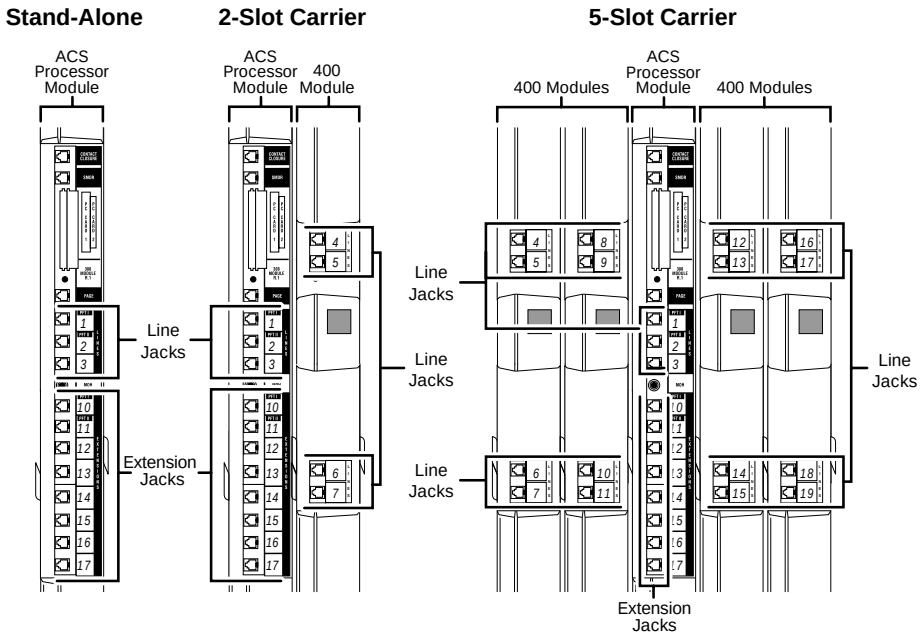

Figure 2-1. PARTNER ACS Standalone, 2-Slot, and 5-Slot Systems Configured for Maximum Lines (3, 7, or 19)

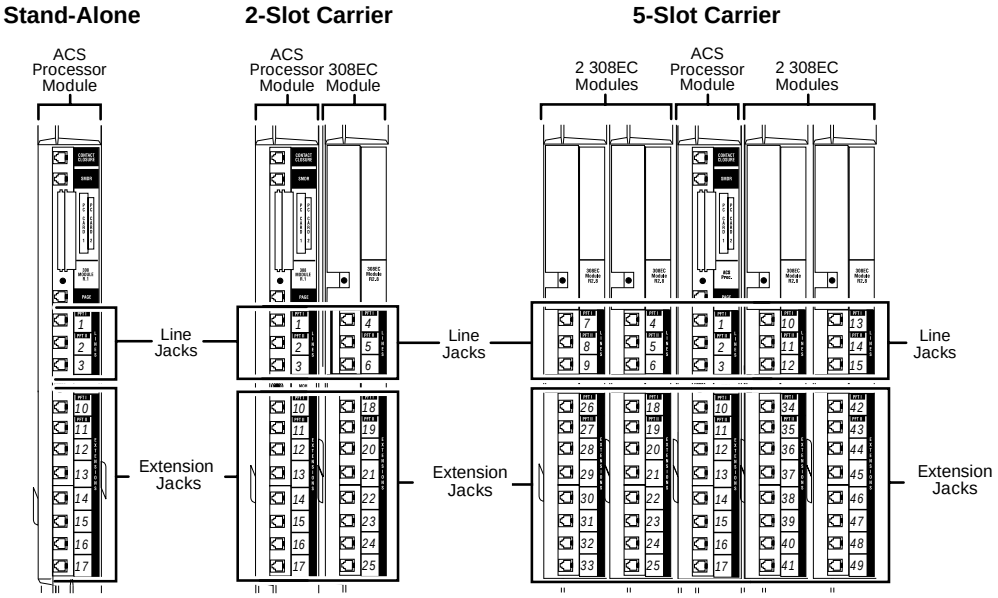

Figure 2-2. Standalone, 2-Slot, and 5-Slot Systems Configured for Maximum Extensions (8, 16, or 40)

Initial System Setup

After the control unit is installed, you set up the system using a combination of system *and* telephone programming procedures. In this guide, System Programming procedures are identified by a code (# and three digits); Telephone Programming procedures are identified by the feature name only.

Use the *System Planner* as a guide when programming. The following sections provide an *overview* of the procedures you use for initial system setup. Chapter 5 explains how to use the specific procedures. Other programming procedures are optional, but are strongly recommended to make the most of your investment. (See ''System Programming Options'' on page 2-12 and ''Telephone Programming Options'' on page 2-29 for details.)

Setting the System Clock

After supplying power to the control unit, use the following procedures:

- **System Date (#101)** to set the month and day.
- **System Day (#102)** to set the day of the week.
- **System Time (#103)** to set the hour and minutes.

Assigning Lines

Key Extensions

Use the procedures described in this section to assign individual lines to pooled extensions or assign lines to key extensions. (In Key mode, all extensions are Key extensions; in Hybrid mode, extension 10 and any extensions set to Key using Line Access Mode (#313) are key extensions.)

For initial setup *only*, use **Number of Lines (#104)** to specify the number of lines that will be assigned to all system extensions. Then use the following procedures as needed:

- **Dial Mode (#201)** to identify any rotary lines (the default for all lines is "touch-tone").
- **Line Assignment (#301)** to assign lines to specific extensions (if the line was not assigned using the Number of Lines procedure), to remove lines from some extensions, or to change the button used to pick up a line at a specific extension.
- **Line Access Restriction (#302)** to prevent an extension from receiving *and/or* making outside calls on specific lines.

- **Line Ringing** (Centralized Telephone Programming) to specify when a line will start ringing at each extension that has the line. For additional information about line ringing options, see "Programming a Receptionist's Extension" on page 2-30.
- **Automatic Line Selection** (Centralized Telephone Programming) to specify the order in which the system selects an available line (intercom or outside), when a user at the extension lifts the handset or presses (Spkr) to make a call without first selecting a specific line button.

  For extensions with standard phones, set **Automatic Line Selection** to intercom first. This enables standard phones to access system features, including intercom calling. When users lift the handsets on standard phones, they hear intercom dial tone. To access an outside line, they must dial (9).

Pooled Extensions

Use the procedures described in this section if your system is configured for Hybrid mode to change the assignment of lines in pools and to assign auxiliary pools to or remove the main pool from pooled extensions. If a pooled extension also has an individual line, refer to "Key Extensions" to assign that individual line.

For initial setup only, use **Number of Lines (#104)** to specify the number of lines that will be assigned to the main pool. Then use the following procedures as needed:

- **Dial Mode (#201)** to identify any rotary lines (the default for all lines is "touch-tone").
- **Pool Line Assignment (#207)** to remove lines from the main pool and assign lines to auxiliary pools.
- **Line Access Mode (#313)** to change a specific extension's operation from Pooled to Key. Refer to "Key Extensions" to assign lines to those extensions.
- **Pool Extension Assignment (#314)** to remove the main pool, assign auxiliary pools, or change the location of the button used to select an auxiliary pool at specific extensions. (The location of the two main pool buttons cannot be changed.)
- **Pool Access Restriction (#315)** to prevent an extension from receiving and/or making outside calls on all lines in specific pools.
- **Line Ringing** (Centralized Telephone Programming) to specify when a line or pool will start ringing at each extension that has the line or pool. By default, lines are set to Immediate Ring and pools are set to No Ring. For additional information on line ringing options, see "Programming a Receptionist's Extension" on page 2-30.

- **Automatic Line Selection** (Centralized Telephone Programming) to specify the order in which the system selects an available line or pool, when a user at the extension lifts the handset or presses (Spkr) to make a call.

  For extensions with standard phones, set **Automatic Line Selection** to intercom first. This enables standard phones to access equipment features, including intercom calling. When users lift the handsets on standard phones, they hear intercom dial tone. To access a pool, they can dial the pool access code 880, 881, 882, or 883 or dial 9 to access the first available line or pool in the sequence.

Customizing Extensions

In addition to line or pool assignments, the following procedures can be used to customize an extension:

- **Line Coverage Extension (#208)** to identify an extension as the “owner” of a specific outside line. A user at the extension can activate **Call Coverage** or VMS Cover for the specified line. Use **Call Coverage Rings (#116)** to specify the number of times a call should ring at the owner’s extension before it is sent to the covering extension or **VMS Cover Rings (#117)** to specify the number of times a call should ring at the owner’s extension before it is sent to the owner’s voice mailbox.
- **Caller ID Call Log Line Association (#318)** to select the lines to associate with extensions for logging unanswered calls. Users can view the Caller ID information for unanswered calls on the phone’s display panel and autodial the numbers of the unanswered calls.
- **Display Language (#303)** to specify the language (English, French, or Spanish) for messages that appear on a system display phone.
- **Automatic Extension Privacy (#304)** t o prevent other extensions with the same line from joining a call at the extension. This feature is also useful for extensions connected to a modem, fax, or any device whose function can be disrupted by someone trying to join it.
- **Forced Account Code Entry (#307)** t o prevent the extension from making an outside call until a required account code is entered. You can also use **Forced Account Code List (#409)** to create a list of valid account codes; this ensures that only authorized users with valid account codes can make outside calls.
- **Call Waiting (#316)** to identify standard phone extensions that can receive the system (not the local telephone company) call-waiting tone for a second incoming call when active on a call.
- **Outgoing Call Restriction (#401)** to prevent the extension from making certain types of outgoing calls (on *all* system lines).

- **Disallowed List Assignments (#405)** to assign one or more Disallowed Phone Number Lists to the extension. Use **Disallowed Phone Number Lists (#404)** to create the lists of outside numbers that extensions *cannot* dial.
- **Allowed List Assignments (#408)** to assign one or more Allowed Phone Number Lists to the extension. Use **Allowed Phone Number Lists (#407)** to create the lists of outside numbers that otherwise-restricted extensions *can* dial.
- **Pickup Group Extensions (#501), Calling Group Extensions (#502), Night Service Group Extensions (#504),** and **Hunt Group Extensions (#505)** to place the extension in any of these groups. See "Setting Up Groups of Extensions" on page 2-17 for more information.
- **Fax Machine Extensions (#601), Doorphone Extension (#604 and #605), Doorphone Alert Extensions (#606), AA Extensions (#607)**, **External Hotline (#311)**, or **Hotline (#603)** to identify the extension as one of these equipment types.

  "Setting Up Auxiliary Equipment" on page 2-17 provides an overview of the procedures you use for setting up devices such as voice messaging systems and call reporting devices. Also, Chapter 4 provides detailed information and example applications for auxiliary equipment.

Copy Settings

The recommended way to set up your system is to program one extension for each type of phone in the system, then use **Copy Settings (#399)** to program other phones of the same type. For example, you can program one PARTNER-18D phone and then copy its settings to any other extensions that have PARTNER-18D or PARTNER-18 phones. See "Copy Settings (#399)" on page 5-90 for a list of the programmed settings that are copied.

Changing Settings after Installation

As your business grows or changes, you will probably need to change the way your system was originally programmed. This section provides some examples and lists the procedures you would use to change settings after installation. For specific details on a procedure, refer to the procedure name in Chapter 5.

I f you are upgrading to PARTNER A CS Release 1.1 or 2.0 or later from an earlier release using the PC Card upgrade, all of your system programming settings will be converted to work with the new release. However, you may want to consider some additional programming for the features that are new in Release 2.0 or later. The new programmable features are:

- **Automatic System Answer Button (#111)**
- **Automatic System Answer Delay (#110)**
- **Automatic System Answer Lines (#204)**
- **Automatic System Answer Mode (#121)**
- **Automatic System Answer Record/Playback (I891)**
- **Call Coverage (F20, XX, XX)**
- **Call Coverage Rings (#110)**
- **Caller ID Call Log Line Association (#318)**
- **Caller ID Log Answered Calls (317)**
- **Direct Extension Dial Button (#113)**
- **Direct Extension Dial Delay (#112)**
- **Direct Extension Dial Lines (#205)**
- **Direct Extension Dial Record/Playback (I892)**
- **Pool Access Restriction (#315)**
- **Pool Extension Assignment (#314)**
- **Pool Line Assignment (#207)**
- **SMDR Talk Time (#611)**
- **PARTNER Voice Messaging PC Card** (PARTNER ACS Release 1.1 or later).

For more information about setting these features, see Chapter 5, “Feature Reference”.
For more information on using the PC Card Software Upgrade, see“Upgrading from PARTNER ACS Release 1.0 to Release 1.1 or Release 2.0 or Later” on page 2-28 in this section.
For more information on using the PARTNER Voice Messaging PC card, see *PARTNER Voice Messaging PC Card Installation, Programming and Use.*

Changing the System Clock

You may need to change the system clock for daylight saving time, after a prolonged power failure, or after a system reset. Use **System Date (#101)**, **System Day (#102)**, and System Time (#103) to set the current date, day, and time.

Adding New Lines

Key Extensions

Use this section to add individual lines to pooled extensions or to add new lines to key extensions (all extensions in Key mode; in Hybrid mode, extension 10 and any extensions set to Key using **Line Access Mode (#301)** are key extensions.)

If you add an outside line to your system, you may need to adjust some line settings. In particular, use **Dial Mode (#201)** if the new line is a rotary line, **Line Assignment (#301)** to assign the line to specific extensions, **Line Ringing** (Centralized Telephone Programming) to specify when the line will start ringing at each extension that has the line, and **Line Access Restriction (#302)** to limit an extension's access to the line. Additionally, the system automatically assigns the new line as the last line in the Automatic Line Selection sequence. If you want to change the order, use **Automatic Line Selection** (Centralized Telephone Programming).

NOTE:
Do *not* use **Number of Lines (#104)** if you add lines to the system *after* initial setup, because it changes **Line Assignment (#301)**, **Line Access Restriction (#302**), **Automatic Line Selection**, and **Line Ringing** for existing lines back to factory settings. To add a new line without affecting other settings, use **Line Assignment (#301)**.

Pooled Extensions

Use this section to add new lines to existing pools if your system is configured for Hybrid mode. To assign a new line to a pooled extension as an individual line, follow the procedures in "Key Extensions."

If you add an outside line to your system for use in an existing pool, use **Dial Mode (#201)** if the new line is a rotary line and **Pool Line Assignment (#207)** t o add the line to an existing pool.

NOTE:
Do not use **Number of Lines (#104**) if you add lines to the system after initial setup, because it changes **Pool Line Assignment (#207)**, **Pool Extension Assignment (#314)**, **Pool Access Restriction (#315)**, **Automatic Line Selection**, and **Line Ringing** for existing pools back to factory settings. Additionally, it changes **Line Assignment (#301)**, **Line Access Restriction (#302)**, **Automatic Line Selection**, and **Line Ringing**

for individual lines back to factory settings. To change pool assignments without affecting other settings, use **Pool Line Assignment (#207)** and **Pool Extension Assignment (#314).**

Adding New Pools

Use this section if your system is configured for Hybrid mode to create new pools. If you add outside lines to your system for use in a new pool, use **Dial Mode (#201)** if the new lines are rotary lines, **Pool Line Assignment (#207)** to assign lines to the new pool, **Pool Extension Assignment (#314)** to assign the new pool to specific extensions, **Line Ringing** (Centralized Telephone Programming) to specify when the new pool will start ringing at each extension that has the pool, and **Pool Access Restriction (#315)** to limit an extension's access to all the lines in the new pool. Also use **Automatic Line Selection** (Centralized Telephone Programming) to add the new pool to the extension's Automatic Line Selection sequence.

Adding New Extensions

If you add an extension to your system, you can probably use **Copy Settings (#399)** to copy the settings of an existing extension. If you wish to further adjust a new extension's settings, see ''Customizing Extensions'' on page 2-6.

Swapping Extensions

If a user changes location, but wants to keep the same extension number, you can make the change easily by changing the connection at the control unit.

For example, if the users at extensions 29 and 32 switch offices, you can disconnect the modular plugs from those extension jacks in the control unit. Then reconnect the plug from 32 into extension jack 29 and the plug from 29 into extension jack 32. Now the users can take their respective phones to their new locations, keep the same extension numbers, and retain the phones' programmed settings.

Changing Settings to Support PBX or Centrex Services

This section applies only if you use PBX or Centrex services with your system. If it does not apply, go to the next section, “System Programming Options.”

- PBX services are provided by a private telephone switch.
- Centrex services are provided by your local telephone company from a Central Office (CO) outside your premises. These services include the Centrex lines connected to your control unit modules and some set of features—such as hold, conference, or transfer—that are available on those lines. Centrex services may be offered in your area under a different name. For specific Centrex features to be available to you, your company must subscribe to those features. For specific information about using Centrex, see the Centrex documentation provided by your local telephone company.

Some of the issues you should consider when setting up your system to work effectively behind a PBX or Centrex system are discussed below. Chapter 5 explains how to use the programming procedures discussed here.

Recall Setting

To set up your equipment to work properly with a PBX or Centrex system, first set **Recall Timer Duration (#107)** to match the setting used by your PBX or Centrex system (usually 800 msec, or “32”). This setting affects the length of a Recall signal sent by the control unit to access PBX or Centrex services.

Dialing Restrictions

Outgoing Call Restriction (#401) is an equipment restriction intended to limit an extension’s dialing to “inside calls only” (using the Intercom buttons on system phones) or to “inside and local calls only” (allowing calls within the PBX or Centrex system and local calls outside the PBX or Centrex system). However, if users in your system use a dial-out code (9 on most PBX or Centrex systems) before dialing numbers outside the PBX or Centrex system, the equipment will not be able to prevent toll calls for extensions restricted to “inside and local calls only” (unless you use Disallowed Phone Number Lists to prevent dialing to specific classes of numbers).

If your PBX or Centrex system includes dialing restrictions, use those instead of the equipment restrictions. If you have PBX or Centrex dialing restrictions on a line and also program equipment restrictions, both the PBX or Centrex system and equipment restrictions apply. However, equipment dialing permissions will not override PBX or Centrex system restrictions.

Speed Dial and Auto Dial Numbers

When you program numbers outside the PBX or Centrex system as Speed Dial and Auto Dial numbers, include the PBX or Centrex system dial-out code (9 on most systems), followed by one or more pauses, in the stored number.

System Programming Options

This section discusses programming options that involve multiple procedures (such as dialing restrictions and auxiliary equipment settings), as well as features that can be used throughout your system (such as Speed Dialing). You can use a combination of programming procedures to set up your system to operate most efficiently, taking into account your company's telephone service, personnel, and equipment, as well as the special needs of particular departments. This section lists the procedures you can use; for details on using a particular procedure, refer to the procedure name in Chapter 5.

Speed Dialing

You can program up to 100 frequently dialed phone numbers—such as numbers for suppliers, repair services, customers—so that *all users in the system* can dial them by pressing *four* buttons: Feature (or # on a standard phone) plus a three-digit code. These are called ***System Speed Dial Numbers.***

Dialing Restrictions and Permissions

The system has several procedures for restricting telephone use, and several for overriding those restrictions. You can use any combination of these procedures to design a system that meets your needs.

When a user makes a call, the system checks the number dialed against all of the dialing that apply to the extension making the call. When the number dialed passes a restriction, the system goes to the next restriction, if necessary. If **Star Code Dial Delay (#410)** is active, star codes are also checked against the restrictions. (Star codes, typically dialed before an outgoing call, provide special services from the local telephone company Central Office (CO); for example, * 6 7 Enter nables a dialer to block the sending of Caller ID information to the called party.) When a user dials a star code, the system checks it against the dialing restrictions to determine whether the code is allowed. If the code is allowed, the system resets its checking procedure and checks the remaining digits that the user dialed to make sure the call is permitted. When a number violates a restriction, the call is stopped and the user hears a reorder tone (fast busy signal).

NOTE:
While procedures that restrict dialing are very effective, absolute protection against misuse cannot be guaranteed. System phones provide more protection than standard phones. Therefore, it is strongly recommended that you install system phones where restricting phone use is important.

Locking an Extension

The system offers a **Station Lock** feature that lets users enter a four-digit code on their telephone dialpad to lock their extensions. This helps prevent other users from making outside calls at those extensions.

Restricting Access to Outside Lines or Pools

A user can access a line or pool either by lifting the handset, pressing the line or pool button on the phone, or dialing the Direct Line Pickup feature code or a pool access code. If you do not want a user to access a specific outside line or pool, you can use **Line Access Restriction (#302)** or **Pool Access Restriction (#315)** to control an extension's access to a certain line or pool (whether the line or pool is assigned to the extension or not). Table 2-1 provides examples of settings that can be used to restrict an extension's access to specific outside lines or pools.

NOTE:
If **Forced Account Code Entry (#307)** is programmed for an extension, that extension is required to enter an account code before dialing an outside number—even those on the **Emergency Phone Number List (#406)** — on all of the lines or pools assigned to that extension. If the **Forced Account Code List (#409)** contains entries, the system checks the account code against the list. If the account code is on the list, line or pool access is allowed; if not, line or pool access is denied.

Table 2-1. Settings that Restrict an Extension's Access to a Specific Line

Type of Restrictions or Permissions for the Extension	Setting for Line Assignment (#301) and Pool Extension Assignment (#314)	Setting for Line Access Restriction (#302) and Pool Access Restriction (#315)
Can receive and place intercom (inside) calls only	All outside lines and pools "not assigned"*	"No access" for all lines and pools
Cannot use a specific outside line or pool	Outside line or pool "not assigned"*	"No access" for that line or pool
Can only monitor call activity and pick up held calls on a specific line	Outside line "assigned"	"No access" for that line
Can only receive calls on a specific line or pool	Outside line or pool "assigned"	"Incoming only" for that line or pool
Can only place outgoing calls on a specific line	Outside line or pool may be "assigned"*	Outgoing only for that line or pool

* If a line or pool is not assigned to the extension, a user can use Direct Line Pickup to access the line or dial the pool access code to access a line in the pool. Emergency numbers, Marked System Speed Dial numbers, Allowed Phone numbers, and numbers dialed using the System Password override all dialing restrictions if a user has access to an outside line or pool to place the call. If Forced Account Code Entry is programmed for an extension, the user must enter an account code before accessing an outside line or pool. If there are entries in the Forced Account Code List, the entered account code must match an entry on that list.

Controlling Calls on Outside Lines

When an extension is allowed access to an outside line or pool, you can use the following procedures to control calling:

- **Outgoing Call Restriction (#401)** defines the type of calls (inside only, local only, or inside, local, and long-distance) that users can make from all lines or pools available at an extension. **Outgoing Call Restriction Button (#114)** allows the receptionist at extension 10 to quickly change an extension's current Outgoing Call Restriction setting.
- **Disallowed Phone Number Lists (#404)** creates up to eight lists of numbers that cannot be dialed. After creating Disallowed Phone Number Lists, use **Disallowed List Assignments (#405)** to assign one or more lists to a specific extension.
- **Night Service** with **System Password (#403)** restricts users at extensions in the Night Service group from dialing outside phone numbers (except Emergency numbers and Marked System Speed Dial numbers) unless the password is entered first.

Table 2-2 provides examples of settings that can be used to restrict an extension's dialing once it gets an outside line or pool.

Table 2.2. Settings that Restrict an Extension's Dialing Once It Gets an Outside Line or Pool

Type of Restrictions or Permissions for the Extension	Setting for Line Assignment (#301) or Pool Extension Assignment (314)	Setting for Line Access Restriction (#302) or Pool Access Restriction (#315)	Setting for Outgoing Call Restriction (#401)	Setting for Disallowed Phone Number Lists (#404)*
Can place intercom and local calls only (and can answer any call)	Outside line or pool may be "assigned"†	"No restriction"	"Local only"	Any local numbers the extension should not dial
Can place intercom, local and long-distance calls (and can answer any call)	Outside line or pool may be "assigned"*	"No restriction"	"No restriction"	Any local and long-distance numbers the extension should not dial

* The Disallowed List then must be assigned to the extension using **Disallowed List Assignment (#405).**

† If a line is or pool not assigned to the extension, a user can use Direct Line Pickup to access the line or dial the pool access code to access a line in the pool. Emergency numbers, Marked System Speed Dial numbers, Allowed Phone numbers, and numbers dialed using the System Password override all dialing restrictions if a user has access to an outside line or pool to place the call. If Forced Account Code Entry is programmed for an extension, the user must enter an account code before accessing an outside line or pool. If there are entries in the Forced Account Code List, the entered account code must match an entry on that list.

Overriding Dialing Restrictions

The following programming procedures provide ways to override all dialing restrictions, provided the user has access to an outside line or pool:

- **Emergency Phone Number List (#406)** defines a list of up to ten numbers that can be dialed from any extension. A typical number is 911.

- Marked **System Speed Dial Numbers** are specially identified System Speed Dial numbers, which a user can dial by pressing (Feature) (or (#) on a standard phone) followed by a three-digit code.
- **System Password (#403)** creates a password that can be entered at any PARTNER-model or MLS-model system phone to override dialing restrictions for the duration of a call.

To override all dialing restrictions except **Line Access Restriction (#302),** pool Access Restriction, and **Night Service** with **System Password (#403)**, use **Allowed Phone Number Lists (#407)** to create up to eight lists of outside numbers that otherwise-restricted extensions *can* dial. Then use **Allowed List Assignments (#408)** to assign one or more of the lists to an extension.

Setting Up Groups of Extensions

You can set up four types of extension groups:

- **Pickup Group Extensions (#501)** assigns extensions to one of four Pickup Groups. A Pickup Group lets any user in the system answer outside calls for any extension in that group.
- **Calling Group Extensions (#502)** assigns extensions to one of four Calling Groups. A Calling Group lets users ring or page all extensions in that group simultaneously or transfer calls into the group. (Additionally, **Simultaneous Paging** lets users make announcements over the loudspeaker paging system and the speakers of idle system phones belonging to Calling Group 1.)
- **Night Service Group Extensions (#504)** assigns extensions to the Night Service Group. When Night Service is activated at extension 10, calls ring immediately at Night Service extensions regardless of how they ring at other times (only the lines assigned to an extension will ring).
- **Hunt Group Extensions (#505)** assigns extensions to one of seven Hunt Groups. (Hunt Group 7 is used exclusively for the voice messaging system.) A Hunt Group lets users ring or voice signal the first available (nonbusy) extension in that group. If a ringing call is not answered, the system tries each available extension in turn until the call is answered. If a voice-signaled call is not answered, the call does not keep hunting. Also use **Group Call Distribution (#206)** to assign outside lines to a Hunt Group if you want outside calls to ring directly into a group.

Setting Up Auxiliary Equipment

The following programming procedures help you manage auxiliary equipment. See Chapter 4 for more information about auxiliary equipment configurations or refer to Chapter 5 for details on using the procedure:

- **Fax Machine Extensions (#601)** identifies extensions to which fax machines are connected.

- The music-on-hold feature uses the following procedures:
  - **Music on Hold (#602)** activates or deactivates the MUSIC ON HOLD jack on the PARTNER ACS processor module.
  - When this jack is activated, an audio source is connected, and **Ring on Transfer (#119)** is set to Not Active, callers hear recorded music or messages while being transferred.
  - **Music on Hold Volume (#614)** controls the volume at which the music plays when the MUSIC ON HOLD jack is active. Changes to this setting affect the many features that use Music on Hold: **Background Music**, **Call Park**, **Call Waiting**, **Conference**, **Exclusive Hold**, **Hold**, **Transfer**, and **Transfer Return**.
  - **Background Music** lets users with system phones (other than the MDC 9000 or TransTalk 9000-series phones) play the recorded material through their phone's speaker when the phone is not in use.
- **Hotline (#603)** identifies internal hotline extensions, so when a person lifts the handset of the hotline phone, a predetermined *extension number* automatically rings. **External Hotline (#311)** identifies external hotline extensions, so when a person lifts the handset of the hotline phone, a predetermined *outside phone number* is automatically dialed.
- **Doorphone Extension (#604** and **#605)** identifies extensions to which doorphones are connected. **Doorphone Alert Extensions (#606)** identifies extensions that signal when the doorphone button is pressed.
- The Contact Closure Adjunct, which plugs into a jack on the PARTNER ACS processor module and has two Contact Closures that can be used to control devices such as an electronic door lock or an alert, uses the following procedures:
  - **Contact Closure Group (#612)** specifies which extensions can activate one or both of the Contact Closures on the Contact Closure Adjunct.
  - **Contact Closure Operation Type (#613)** specifies the length of time that each Contact Closure remains active.
  - **Contact Closure F41** and **F42** can be programmed on feature buttons so that the Contact Closures can be activated by pressing the buttons.
- **AA Extensions (#607)** identifies an extension to which an auto attendant is connected. This lets the system notify users with display phones when they are receiving a call that has been transferred from the auto attendant. Also, **Transfer Return Extension (#306)** lets you identify the extension to which a call transferred by the auto attendant should be routed if the destination extension does not answer.
- The call reporting device uses the following procedures:

- — **SMDR Record Type (#608)** specifies the type of calls that you want to record for call reporting—either all calls or outgoing calls only.
- — **SMDR Top of Page (#609)** notifies the system that the printer has been aligned to the top of a new page.
- — **SMDR Output Format (#610)** identifies whether a maximum of 15 digits or 24 digits is printed for dialed numbers on the call report.
- — **SMDR Talk Time (#611)** specifies whether or not the call report includes the Talk field, which records the time a user spends on an incoming outside call—from the time the user answers the call to the time the call is disconnected from the system.
- — **Account Code Entry** lets users enter account codes for outside telephone calls (incoming or outgoing); if used, the account codes are included on the call report.

■ The voice messaging system uses the following procedures:

- — **Hunt Group Extensions (#505)** assigns the extensions associated with the voice messaging system hardware to Hunt Group 7—the VMS Hunt Group.
- — **Group Call Distribution (#206)** assigns lines to the VMS Hunt Group so calls can ring directly into the voice messaging system and receive Automated Attendant Service.
- — **Line Coverage Extension (#208)** identifies an extension as the owner of a specific outside line so calls on that line can ring directly into the owner's voice mailbox when either **Automatic VMS Cover (#310)** or **VMS Cover** is on at the owner's extension.
- — **VMS Hunt Delay (#506)** determines when outside calls should be answered by the Automated Attendant Service of the voice messaging system. You can set the system for either immediate call handling or delayed call handling. The setting you select is used for both day and night operation.
- — **VMS Hunt Schedule (#507)** determines when outside calls should ring the VMS Hunt Group (always, day only, or night only) depending on the status of the **Night Service Button (#503)** at extension 10.
- — **Automatic VMS Cover (#310)** determines whether or not an extension's unanswered intercom and transferred calls and outside calls on lines assigned ownership are automatically covered by the voice messaging system.
- — **VMS Cover Rings (#117)** specifies the number of times intercom and transferred calls or outside calls on lines assigned ownership ring at extensions before they are sent to the voice messaging system.

— **Transfer Return Extension (#306)** identifies the extension to which a call transferred by the voice messaging system should be routed if the destination extension does not answer and does not have voice mail coverage active. (The transfer return extension for the voice messaging system is typically extension 10.)

NOTE:
If an extension has **VMS Cover** and **Call Coverage** active, intercom and transferred calls and outside calls on lines assigned ownership ring at the covering extension after the specified number of **Call Coverage Rings (#116)**. Then:

- If the covering extension does not answer, the call is routed after the specified number of **VMS Cover Rings (#117)** to the voice mailbox of the extension that activated Call Coverage.
- If the covering extension has **Do Not Disturb** active, the call is immediately routed to the voice mailbox of the extension that activated Call Coverage.

Backup and Restore Features

The PARTNER ACS processor module has two PC Card slots. These slots function similarly to a floppy drive on a PC, in that information can be added to the system or copied from the system using a PC Card inserted in one of the slots. To use the optional Backup and Restore features of the system, you must purchase a Backup/Restore PC Card from Lucent Technologies. Only these Lucent Technologies PC Cards can be used in the PARTNER ACS processor module. The same PC Card stores both automatic and manual backups separately.

Backup Programming—Automatic (#123) enables you to specify whether automatic backups should be performed or not. If you set this feature to “Active,” your system and telephone programming settings are backed up to the PC Card automatically at 2:00 a.m. on the first day of each month. The PC Card must be present in the PC Card slot for the backup to take place.

Backup Programming—Manual (#124) enables you to initiate a backup of your system and telephone programming settings whenever you feel that it is necessary. It is recommended that a backup be performed after any change to the system or telephone programming.

Restore Programming (#125) copies either the manual or the automatic backup data stored on a PC Card back to the system, thereby enabling you to restore settings to their status at the time of the last automatic or manual backup.

Hospitality Features

The following hospitality features are for special applications, such as the Bed-and-Breakfast and Hotel/Motel industries. With both features, the receptionist at extension 10 optionally can use the Intercom Autodialer to specify an extension.

- **Outgoing Call Restriction Button (#114)** lets you program a button on the system phone at extension 10 to change an extension's current Outgoing Call Restriction setting *without* entering System Programming mode. For example, after a guest's departure, a hotel manager can change the No Restriction setting of the guest room phone to Inside Only so outside calls cannot be made from the phone after the guest checks out.

Using System Programming

System Programming changes settings for the system as a whole, or for individual lines, pools, or extensions. You can also use System Programming to set up dialing restrictions, define groups, or set up auxiliary equipment. Refer to the filled-out *System Planner* when you are changing system settings, and be sure that any changes in programming are recorded there.

The Programming Overlays

System Programming requires a Programming Overlay placed over the dialpad of the system display phone at extension 10 or 11. (Overlays are provided with the system documentation. Replacements can be ordered from the Lucent Technologies BCS Publications Center. See ''Reference Materials'' under ''Product Ordering Information'' on page B-4.) Figure 2-3 on page 2-23 illustrates the Programming Overlays for the PARTNER-34D and PARTNER-18D phones.

During System Programming, the normal functions of several buttons on the display phone at extension 10 or 11 change. For example, the left (Intercom) button becomes (System Program) and the right (Intercom) button becomes (Central Tel Program). The Programming Overlay identifies these buttons.

You use the following special buttons while programming:

- (Next Procedure) and (Prev Procedure) cycle forward and backward through the programming procedures. You can use these buttons to select a procedure.

  (If a procedure instructs you to press (Next Procedure) (Prev Procedure), pressing these buttons one after the other enables you to repeat the current programming procedure.)

- (Next Item) and (Prev Item) cycle forward and backward through a procedure's parameters. A parameter is typically an outside line, a pool, an extension, or a telephone list entry.

- (Next Data) and (Prev Data) cycle forward and backward through the valid entries. These buttons work only for fixed data, such as a line or extension number. They do not work for variable data such as date, time, password, telephone numbers, or doorphone assignments.

- (Remove) returns the current setting to the factory setting. When using **Line Assignment (#301)**, removes lines from an extension; when using **Pool Extension Assignment (#314)**, removes pools from an extension.

- (Enter) ends an entry of variable length, such as a telephone number in an Allowed Phone Number List.
- (System Program) starts the System Programming process.
- (Central Tel Program) starts the Centralized Telephone Programming process (to customize individual telephones centrally from extension 10 or 11).
- (Feature) when followed by (0) (0), enters or exits programming mode.
- (Wild) enters a “wildcard” (a character that matches any digit dialed) in telephone numbers in **Allowed Phone Number Lists (#407)**, **Disallowed Phone Number Lists (#404)**, and the **Forced Account Code List (#409)**.

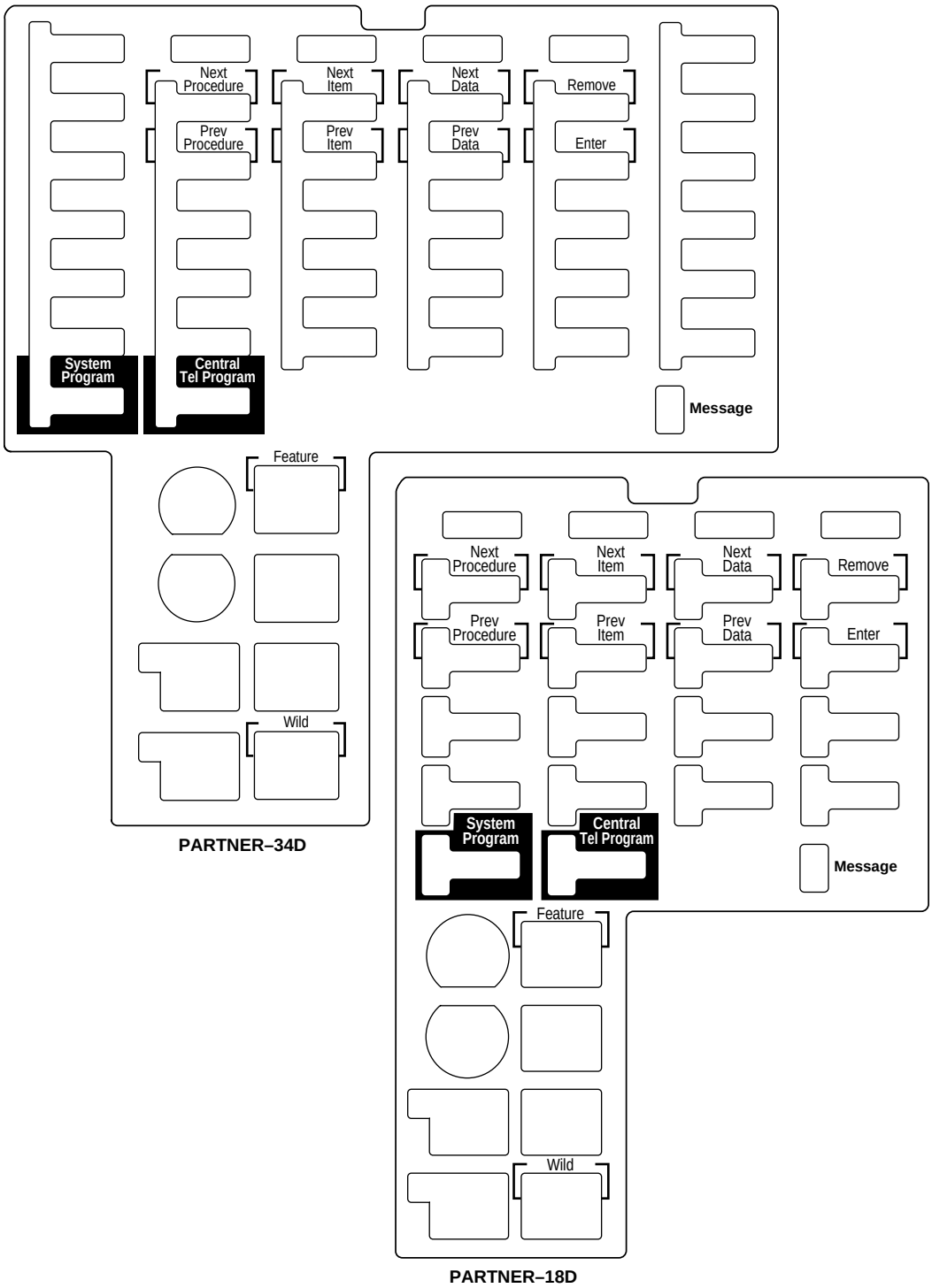

Figure 2-3. Programming Overlays for PARTNER-Model Phones

Button Locations

When programming from a PARTNER-model phone at extension 10 or 11, keep in mind that the button you press at the programming extension may be in a different location on the phone to which the programming applies. Figure 2-4 on page 2-26 shows the relative location of buttons on each PARTNER-model phone. For example, the button labeled E on the PARTNER-34D phone in Figure 2-4 is in the bottom row. The equivalent button on the PARTNER-18D phone is in the leftmost position of the second row from the bottom. If your system has a mix of PARTNER- and MLS-model phones, refer to Appendix E for information about programming from a PARTNER-model phone to an MLS-model phone or from an MLS-model phone to a PARTNER-model phone.

Programming Mode

1. Place the Programming Overlay over the dialpad of the system display phone at extension 10 or 11—see "The Programming Overlays" on page 2-21 for more information.
2. To enter programming mode, press (Feature) (0) (0). A display similar to the following appears:

```
PROGRAM EXTENSION 10
```

   (If you are programming from extension 11, "11" displays instead of "10.")

3. Press (System Program). A display similar to the following appears:

```
10 Enter Extension Name
```

   This display is for the **Extension Name Display** feature. When you are entering System Programming mode, skip it by moving on to Step 4.

4. Press (System Program) again. A display similar to the following appears:

```
SYSTEM PROGRAM
```

5. Specify a programming procedure in one of two ways:
   - ***Direct Method*:** Dial the code for that procedure. System Programming procedures in this guide are identified by a # and a three-digit code (for example, **System Date** is **#101**). This method is best when you are using only a few procedures during a programming session and you know the codes.
   - ***Cycle Method*:** Cycle through the procedures in numerical order. Press (Next Procedure) and (Prev Procedure) to cycle forward and backward through the programming procedures. This method is best when you are using multiple procedures during a programming session, or if you do not know the codes.
6. To exit programming mode, you can press (Feature) (0) (0) or lift the handset off-hook, then place it back in the cradle.

NOTE:
You can talk on the phone while you program. This is useful if you call for support while programming. However, you must call before you enter programming mode, and you must use the handset to talk, not the speaker and microphone.

PARTNER-34D Phone

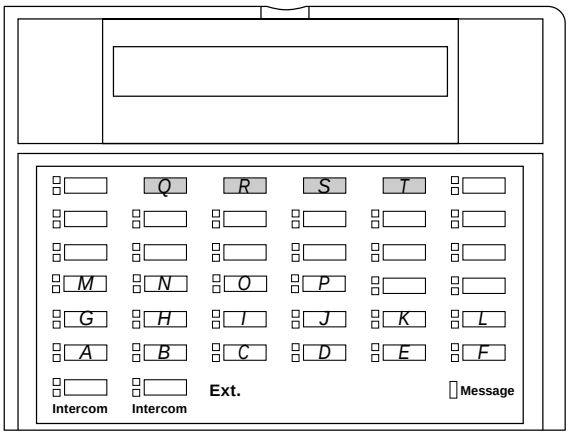

PARTNER-18D/18 Phone

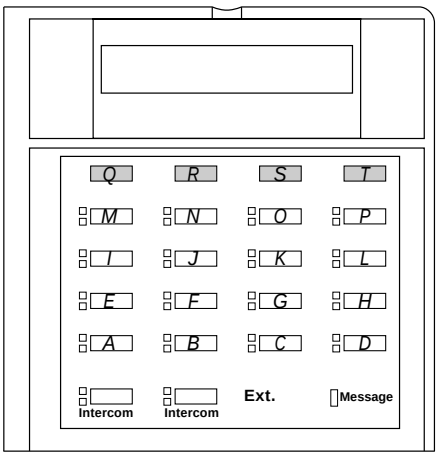

PARTNER-6 Phone

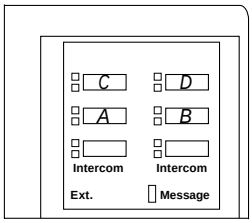

Figure 2-4. Button Locations on PARTNER-Model Phones

Changing Programming Type

When you are in programming mode, you can move between System Programming and Centralized Telephone Programming. To change to Centralized Telephone Programming when you are in System Programming, press (Central Tel Program). To move back to System Programming when you are in Centralized Telephone Programming, press (Central Tel Program) then (System Program).

Remote Programming

The system permits programming from a remote location using an auxiliary device called the Remote Administration Unit (RAU). Remote programming requires the installation of two RAUs—one at your site and one at the location from which the programming is to be done. For more information about remote programming, see the *PARTNER Communications System Remote Administration Unit Installation and Use* guide.

Upgrading from PARTNER ACS Release 1.0 to Release 1.1 or Release 2.0 or Later

If you are upgrading to a later release of PARTNER ACS using a PC card, use the following procedure.

1. Power down the system.
2. Insert the PC Software Upgrade Card into either of the two PC Card slots in the PARTNER ACS processor module.
3. Turn the system back on. While the system upgrades, the bicolor (red/green) power LED on the processor flashes green and red alternately. When the upgrade is finished (in about 20 seconds), the power LED becomes steady green. All of your system and extension programming settings will be intact.

Telephone Programming Options

System telephones are ready to use when they are installed, but they can be customized to meet the needs of your business and individual users. This customization is accomplished through *Telephone Programming*.

Automatic Line Selection

When a user lifts the telephone's handset or presses (Spkr), the system chooses an idle line or pool. **Automatic Line Selection** determines the order in which the system looks for an idle line or pool. You can set the system to look for lines or pools in any desired order. For standard phones or for any phone used mainly to call other extensions, select an inside (intercom) line first.

Extension Name on Display

With **Extension Name Display,** users can assign a name (up to 20 characters long) to their extension. Then, when those users make an intercom call, group call, or transfer a call, their name and extension number appears on the display phone receiving the call. Similarly, users receiving a transfer return call see the name and extension number of the person assigned to the extension that did not answer the transferred call.

Line Ringing

Line Ringing defines when each outside line or pool rings at a phone. For each line or pool at an extension, you can specify Immediate Ring, Delayed Ring (phone rings after a 20-second delay), or No Ring. The factory setting for line buttons is Immediate ring; the factory setting for pool buttons is No Ring.

Personal Speed Dialing

Personal Speed Dial numbers are outside phone numbers that a user dials by pressing (Feature) (or (#) on a standard phone) plus a two-digit code. Unlike System Speed Dial numbers, which are available to all users in the system, Personal Speed Dial numbers are available *only* at the extension for which they are programmed. Users can store up to 20 Personal Speed Dial numbers.

Programming Telephone Buttons

Telephone buttons without lines or pools assigned to them can be programmed for system features such as Exclusive Hold or Conference Drop or for telephone numbers, so you can use the feature or dial the phone number with one touch. Once programmed, these buttons are called *Auto Dial buttons*, because simply pressing the button automatically dials the feature code or telephone number.

A user who has a system phone with programmable buttons should consider programming them with a combination of frequently used features and outside and intercom telephone numbers.

Programming a Receptionist's Extension

Call Handling Options

If you set up a centralized telephone answering position at extension 10, use the following settings to customize it:

- ***Immediate Call Answering.*** If the receptionist should answer *all calls*, use **Line Assignment (#301)** to assign all lines to extension 10. Set **Line Ringing** for all lines at extension 10 to Immediate Ring; set the lines assigned at each user's extension to Delayed Ring or No Ring.

  In Hybrid mode, Immediate Call Answering is the factory setting. (Lines are assigned as individual line buttons on the phone at extension 10 and all pool buttons assigned to users' extensions are set to No Ring.)

- ***Backup Call Answering.*** If the receptionist should answer some lines *only when a user does not pick up*, set **Line Ringing** for those lines at extension 10 to Delayed Ring; set the lines or pools assigned at each user's extension to Immediate Ring.

- ***No Answering.*** If some lines should not be picked up by the receptionist at all, either set **Line Ringing** for those lines at extension 10 to No Ring or simply use **Line Assignment (#301)** to remove those lines from extension 10. In either case, set **Line Access Restriction (#302)** to No Access for those lines at extension 10 to prevent the receptionist from using Direct Line Pickup to access those lines.

Backup Answering Options

To assist the receptionist in handling calls, consider the following features:

- **Automatic System Answer**. Useful during peak calling periods to answer outside calls while the receptionist is busy on other calls. When activated, this feature answers incoming calls after a specified number of rings and plays a customized greeting. Then, depending on how **Automatic System Answer Mode (#121)** is programmed, the system either:

  — places the call on hold at extension 10 (the light next to the line button winks green at extension 10 and winks red at all other extensions that have the line); the outside caller hears music on hold, if it is available.

  — continues to ring all extensions that have access to the line (the green light next to the line button at those extensions flash); the outside caller hears music on hold, if it is available.

  — disconnects the call.

- The first two options provide audible and/or visual indication of incoming calls waiting to be answered.
- The third option is not applicable as a backup answering feature; however, it is useful for making brief announcements such as temporary closings or hours of business.
- **Direct Extension Dial**. Useful for routing outside callers directly to a specific extension or Hunt Group. When activated, this feature answers incoming calls after a specified number of rings and plays a customized message prompting the caller to dial the digits of the designated extension or hunt group.
- **Call Forwarding/Call Follow-Me**. Useful when a receptionist leaves the desk for any period of time. Calls can be forwarded to a backup answering extension.
- **Call Coverage**. Useful when users are unable to answer their calls and want them answered by someone else.

Alternatively, you can install a voice messaging system to provide an automated backup answering position. Useful when the receptionist is busy on calls, away from the desk, or at night, the voice messaging system answers incoming calls after a specified number of rings, plays a customized greeting, requests callers to enter an extension number, and transfers the caller to the appropriate extension. If no one answers at the destination extension, the caller can leave a personal message in that extension's mailbox.

Button Programming

The PARTNER-34D phone shown in Figure 2-5 illustrates the following programmed buttons in addition to some other system features:

- ***Extension Numbers.*** Auto Dial buttons are programmed for extensions 11 through 28. The receptionist can use these buttons to dial or transfer calls to the extensions with one touch. In addition, the lights of these Auto Dial buttons show the status of the extension, so the receptionist can tell whether the phone at the extension is idle (*no lights on),* busy (*red on*), calling the receptionist (*green flash)*, sending coverage calls to or manually signaling the receptionist *(green flutter),* or ringing back after the receptionist transferred a call (*green flutter*).
- ***Manual Signaling.*** A Manual Signaling button (labeled MS-Bill) is programmed to signal the target extension. When the button is pressed, the user at the target extension will hear a tone for as long as the button is pressed. This feature is typically used by a receptionist to alert the boss to an important incoming call when the boss is already on a call. The lights of a Manual Signaling button work like an Auto Dial button to show the status of the target extension. Additionally, a Manual Signaling button can be used to place intercom calls. (Manual Signaling applies only to system phones.) See ''Manual Signaling (F13XX or F13*XX)'' on page 5-182 for more information.

NOTE:
You can have only one button for a target extension per extension. The button can be programmed as a Manual Signaling button or as an Auto Dial button for intercom ringing or voice signaling.

- ***Fax Management.*** A button (labeled Fax-30) is programmed as a Fax Management button for the fax machine connected to extension 30. The lights next to the button show what is happening at the fax machine (for example, *red broken flutter* indicates that the fax machine is not responding—for example when it is out of paper). (For more information, see "Using the Fax Management Feature" on page 4-16.)

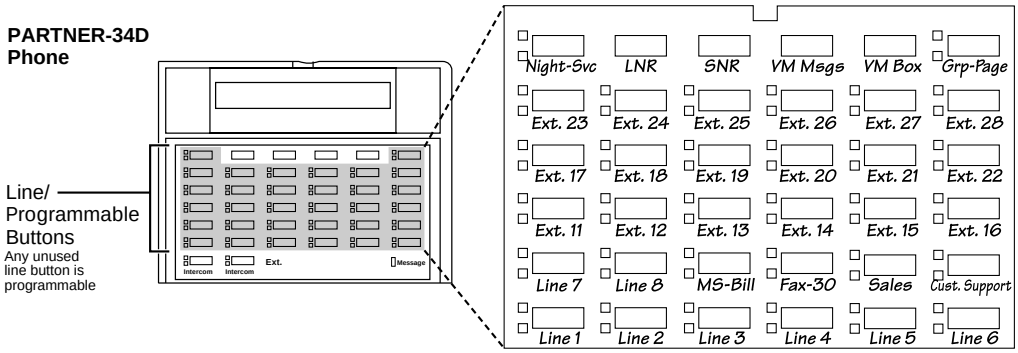

Figure 2-5. Button Programming for Receptionist's Phone

Alternatively, the receptionist can use an Intercom Autodialer for the extensions the receptionist dials most frequently. This leaves buttons on the phone free for more features and phone numbers.

Using Telephone Programming

There are two ways to program a telephone: *Centralized Telephone Programming* from extension 10 or 11 (see below) and *Extension Programming* from a user's own extension (see "Using Extension Programming" on page 2-35).

Telephone Models

Figure 2-6 illustrates a PARTNER-18D set up as a key extension and Figure 2-7 illustrates a PARTNER-6 phone set up as a pooled extension. As you program buttons, mark their functions on the phone's labeling sheet (see the examples in Figure 2-6 and Figure 2-7).

NOTE:
A PARTNER-6 phone only has four buttons available for lines for lines or pools. If four lines are assigned, it has no programmable buttons. If the main pool is assigned, it has two programmable buttons. The MDW 9000 phones look just like a PARTNER-6 phone when you program them centrally.

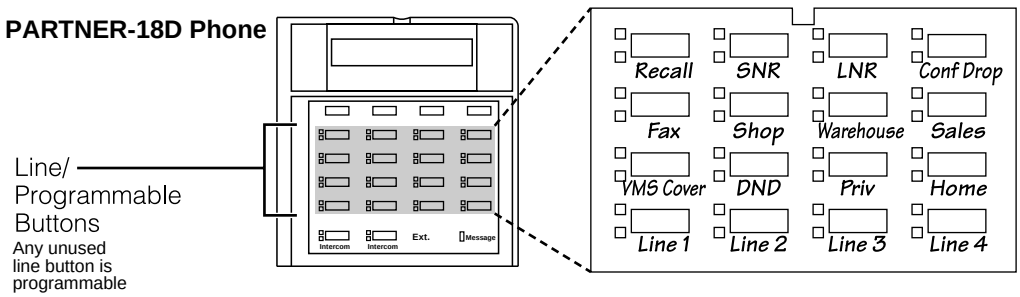

Figure 2-6. Example of PARTNER-18D Phone as a Key Extension

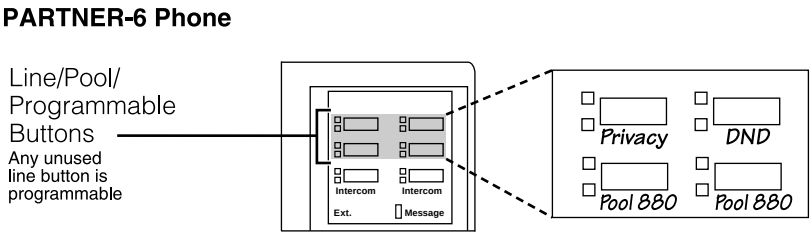

Figure 2-7. Example of PARTNER-6 Phone as a Pooled Extension

Using Centralized Telephone Programming

Use Centralized Telephone Programming to program features or store telephone numbers for individual extensions from extension 10 or 11. Most features also can be programmed on a system phone at the user's extension. Keep in mind the following exceptions:

- **Automatic Line Selection** and **Line Ringing** always must be programmed using Centralized Telephone Programming.
- If a user has a standard phone, **Personal Speed Dial Numbers** for the extension can be programmed only by using Centralized Telephone Programming.
- If a user has a standard phone or a non-display system phone, **Extension Name Display** for the extension can be programmed only by using Centralized Telephone Programming.

During Centralized Telephone Programming, the display phone at extension 10 or 11 takes on the characteristics of the telephone being programmed, including any System Programming settings and lines assigned to the phone. If you have any 34-button phones in the system, you must use a 34-button display phone to program since an 18-button phone *cannot* be used to program a 34-button phone. Also, if your system has both PARTNER-model and MLS-model phones, it is recommended that you use a PARTNER-model display phone at the programming extension.

To program a phone from extension 10 or 11, use the following procedure:

1. Place the Programming Overlay over the dialpad of the system display phone at extension 10 or 11—see "The Programming Overlays" on page 2-21 for more information.
2. To start programming:

   a. Press (Feature) (0) (0). A display similar to the following appears:

```
PROGRAM EXTENSION 10
```

   (If you are programming from extension 11, "11" displays instead of "10.")

   b. Press (System Program). A display similar to the following appears:

```
10 Enter Extension Name
```

   This display is for the **Extension Name Display** feature. When you are entering Centralized Telephone Programming mode, skip it by moving on to Step 2c.

   c. Press (System Program) again. The display reads:

```
SYSTEM PROGRAM
```

   d. Press (Central Tel Program). A display similar to the following appears:

```
CENTRAL TELEPHONE PROG
Extension:
```

3. Dial the extension number of the telephone to be programmed.
   The green lights next to buttons on which lines or pools are assigned show the current Line Ringing settings; remaining buttons can be programmed with telephone numbers, extension numbers, or system features.
4. At this point, you can:
   - Use **Automatic Line Selection** to change the order in which the telephone selects a line or pool when the user picks up the handset. (If you want to change **Automatic Line Selection** for an extension, you must do so immediately after you enter programming mode and dial the extension number.)
   - Use **Extension Name Display** to assign a user's name to the extension. See Chapter 5 for the character codes. (Like Automatic Line Selection, this procedure must be done immediately after you enter programming mode and dial the extension number. If you want to change both Automatic Line Selection and Extension Name Display, first change Automatic Line Selection, then press (Central Tel Program), redial the extension number, then use **Extension Name Display.**)
   - Use **Line Ringing** to change the ringing for an individual line or pool.
5. Program **Personal Speed Dial Numbers, Auto Dial** numbers, or system features as described in Chapter 5.

   To erase the current programming from a button, press the button, then press (Mic/HFAI).
6. To change the settings for another extension, press (Central Tel Program), then dial the new extension number.
7. To exit programming mode, you can press (Feature) (0) (0), or lift the handset off-hook, then place it back in the cradle.

Changing Programming Type

When you are in programming mode, you can move between System Programming and Centralized Telephone Programming. To change to System Programming when you are in Centralized Telephone Programming, press (Central Tel Program) then (System Program). To move back to Centralized Telephone Programming when you are in System Programming, press (Central Tel Program).

Using Extension Programming

Users can program features or store numbers on buttons from their own phones using Extension Programming. Keep in mind the following exceptions:

- **Automatic Line Selection** and **Line Ringing** always must be programmed using Centralized Telephone Programming.

- If a user has a standard phone, **Personal Speed Dial Numbers** for the extension can be programmed only by using Centralized Telephone Programming.
- If a user has a standard phone or a non-display system phone, **Extension Name Display** for the extension can be programmed only by using Centralized Telephone Programming.

To program at the extension, use the following procedure:

1. To start programming, dial (Feature) (0) (0).
   The green lights next to buttons on which lines or pools are assigned for the extension show the current Line Ringing settings. Remaining buttons can be programmed with telephone numbers, extension numbers, or system features.
2. To assign a name to the extension, press left (Intercom), then enter the character codes. See "Extension Name Display" on page 5-126 for the codes.
3. Program **Personal Speed Dial Numbers, Auto Dial** numbers, or system features as described in Chapter 5.

   To erase the current programming from a button, press the button, then press (Mic/HFAI).
4. To exit programming mode, you can press (Feature) (0) (0), or lift the handset off-hook, then place it back in the cradle.

Learning About Telephones

3

This chapter explains how system and standard phones work with the system, as well as combination extensions where more than one phone or standard device is installed. In addition, basic call handling features and dial-code features are listed at the end of this chapter. See the feature name in Chapter 5 for details about a specific feature.

System Telephones

PARTNER-model phones have several buttons and indicators in common. The following pages explain where they are and how they work. For information about an MLC-6, MLS-model, or TransTalk 9000-series phone, refer to the documentation that came with the phone.

Buttons and Indicators

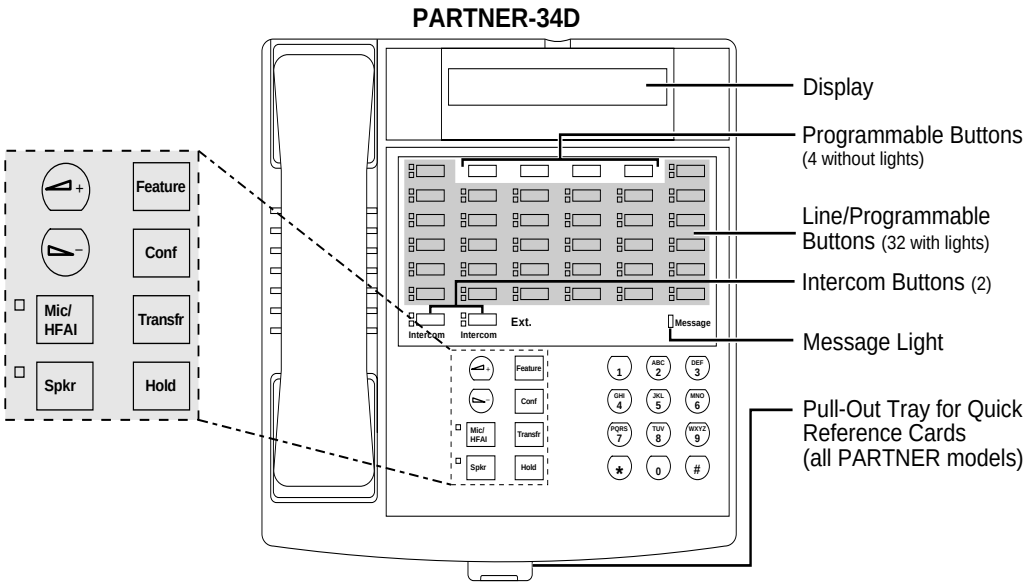

The following buttons and indicators appear on system phones:

Display. (PARTNER-34D and PARTNER-18D only) Shows date, day, and time when the phone is idle, number dialed when placing a call, extension number (and name if programmed) calling you or transferring a call to you, and duration while a call is in progress. When programming, shows settings, options, and prompts. (To adjust the display contrast, see **Volume Control Buttons** on the next page.)

Line/Programmable Buttons. Used for individual outside lines or (if no line is assigned on a button) for programming telephone or extension numbers, or other system features (such as Last Number Redial). When a line is assigned, press the line button to make a call on that specific line (lights show status of line). When a number feature is programmed, press the button to dial the number or use the feature. The PARTNER-34D has 36 programmable buttons (32 with lights and 4 without lights); the PARTNER-18D has 20 programmable buttons (16 with lights and 4 without lights); the PARTNER-18 has 16 programmable buttons (all with lights); the PARTNER-6 has 4 programmable buttons (all with lights).

Intercom Buttons. Press to make (or answer) a call to (or form) another extension in the system.

Feature. Press to change programmed settings or use system features.

Conf. Press to add other parties to your call.

Transfr. Press to pass a call to another extension.

Hold. Press to put a call on hold.

Buttons and Indicators

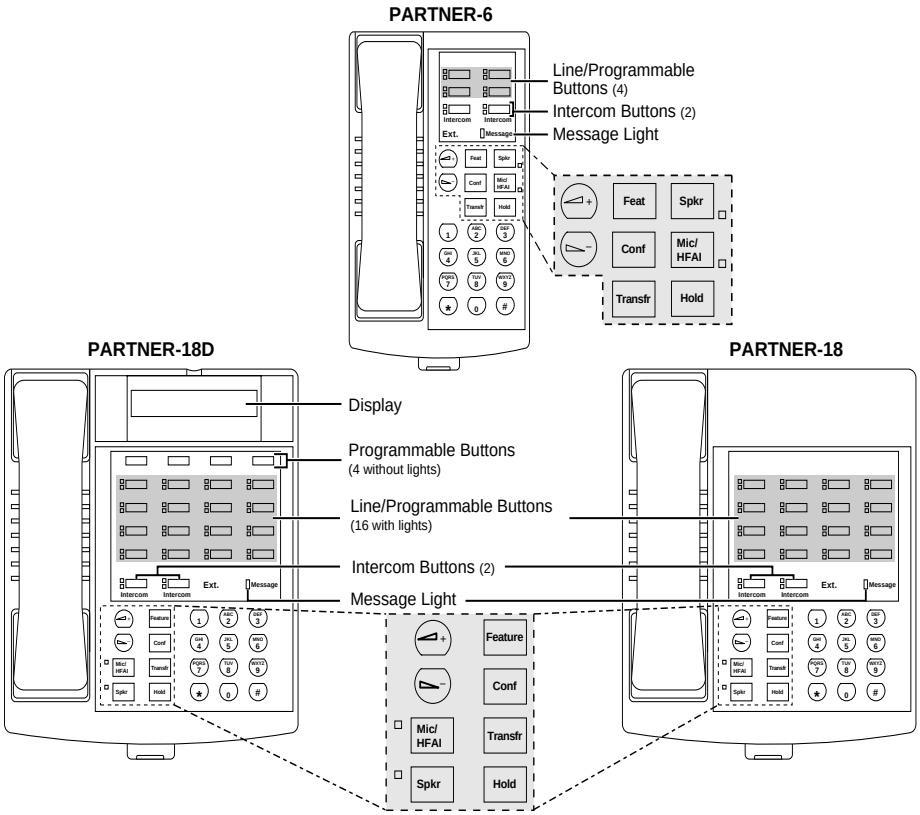

Spkr. Press to turn on and off the speaker and microphone (if available), so you can dial and have a conversation without lifting the handset. The light next to this button shows when the speaker is turned on.

Mic/HFAI. Press to turn the microphone on and off. The light next to this button shows when the microphone is turned on. Leave on to use Hands-Free Answer on Intercom (HFAI) feature.

Volume Control Buttons. Press ⊖ to decrease or ⊕ to increase the volume as follows:

- To adjust ringer volume, press while the phone is idle and the handset is in the cradle.
- To adjust speaker volume, press while listening to a call through the speaker.
- To adjust handset volume, press while listening through the handset.
- To adjust background music volume, press while listening to music through the phone's speaker.

To adjust the display contrast on the PARTNER-34D and PARTNER-18D phones, press ⊛ then ⊖ to decrease the brightness or ⊕ to increase the brightness, while the phone is idle and the handset is in the cradle.

Lights

Each line or pool button has a green light and a red light. The meaning of these lights varies, depending on whether the button is used to access an outside line or pool, is programmed with a system feature, or is programmed for Auto Dialing an extension number (Intercom Auto Dial button). (Auto Dial buttons for fax extensions show additional information; these “Fax Management” buttons are described in Chapter 4. When a phone is in programming mode, the lights show information about programmed settings; see Chapter 2 for details.)

Table 3-1 shows the meanings of the various light patterns for each possible button assignment.

Table 3-1. Light Patterns for System Phones Intercom status

Light Pattern	Line Button	Pool Button	Feature Button	Intercom Auto Dial Button
Steady On	Line is in use. Green means you are using the line; red means someone at another extension is using the line.	—	Green means feature* is on.	Red means the extension programmed on the button is busy (making or answering a call).
Off *(steady off)*	Line is idle (not being used).	—	Feature* is off.	Extension programmed on the button is idle (not being used).

Table 3-1. Light Patterns for System Phones Intercom status

Light Pattern	Line Button	Pool Button	Feature Button	Intercom Auto Dial Button
Flash *(long on, long off)*	A call is ringing on the line. Green flash means a call is ringing at your extension. Red flash means a call is ringing on the line, but not at your extension.	—	A user is entering a four-digit code to lock or unlock his or her extension.	Green flash means someone at the extension programmed on the button is calling you.
Alternating Red/Green Flash *(red on, green on, red on, green on)*	Alternating green and red flash appears at both extensions in a joined call, and at any extension connected in a conference call.	—	—	—
Wink *(long on, short off)*	A call on the line is either on hold or parked. Green wink means the call is on hold or parked at your extension. Red wink means the call is on hold or parked at another extension. (Anyone who has the line can retrieve the held call.)	Green wink means the call is either on hold or parked at your extension. (Anyone who has the line can retrieve the held call.)	—	—

Table 3-1. Light Patterns for System Phones Intercom status

Light Pattern	Line Button	Pool Button	Feature Button	Intercom Auto Dial Button
Green Flutter *(short on, short off)*	A call is on exclusive hold at your extension (and can only be retrieved from your extension).	A call on a line in the pool is on exclusive hold at your extension and can be retrieved only from your extension.	Caller ID Inspect is on, a Wake Up Service call is being scheduled from extension 10.	A call transferred to the extension programmed on the button is now returning to your phone or you are being manually signaled by the extension.
Red Broken Flutter *(short on/off, long off)*	—	—	—	Fax Management only— the fax extension is not answering calls (may be out of paper).

* Applies to Caller ID Name Display, Do Not Disturb, Night Service, Outgoing Call Restriction Button, Privacy, Voice Interrupt on Busy Talk-Back, and VMS Cover, all of which require programming on a button with lights. Can also apply to Account Code Entry, Background Music, and Call Forwarding/Call Follow-Me, if any of them are programmed on a button with lights. (For more information about programming these features, see Chapter 5.)

Ringing Patterns

System phones have these ringing patterns:

- An outside call will *ring... ring... ring.*
- An intercom call will *ring BEEP... ring BEEP... ring BEEP*. If you have a system display phone, the caller's extension number (and name if programmed) will show on the display.
- A transferred call, or an unanswered transferred or parked call that is ringing back at your extension, will *ring BEEP BEEP... ring BEEP BEEP... ring BEEP BEEP.*

NOTE:
If you use the system with PBX or Centrex lines, the PBX/Centrex distinctive ringing patterns are not passed to phones. Phones use the ringing patterns described here instead.

Dial Tones

You will **encounter** two different dial tones when calling with a system phone:

- ***Outside dial tone*** is generated by your local phone company to indicate that you are connected with an outside line.
- ***Intercom dial tone*** is generated by the system to indicate that you are connected with an inside line. You hear this dial tone when you are making an inside, or *intercom*, call.

To hear the difference between the two types of dial tones on a system phone, press a line or pool button. The dial tone you hear is an outside dial tone. To hear an intercom dial tone, press Intercom.

Using the Handset, Speaker, and Microphone

Every PARTNER-model and MLS-model system phone except the MLS-6 has a speaker and a microphone, which you can turn on by pressing Spkr. In addition, you can turn just the microphone on and off by pressing Mic/HFAI. When the green light next to Mic/HFAI is on, the microphone is on.

If you prefer to dial and conduct calls without lifting the handset, you can use the speaker and the microphone instead. Use these techniques to make calls with the speaker and the microphone:

- To make a call without lifting the handset, press Spkr to get a dial tone; then dial the number and you will hear the call ringing. When the other party answers, you can talk without lifting the handset.
- If you are already on a call, you can switch from the handset to the speaker and microphone by pressing Spkr and hanging up the handset. Conversely, if you are using the speaker and microphone and want to switch to the handset, lift the handset and the speaker and microphone will turn off.
- To turn off the microphone when you are using the speaker, press Mic/HFAI. This will *mute* your voice so the other party cannot hear you.
- Use the Hands-Free Answer on Intercom (HFAI) feature to answer *voice-signaled* calls without lifting the handset (see below).

Hands-Free Answer on Intercom (HFAI)

When you receive a *voice-signaled* intercom call, your phone beeps once to indicate that your speaker has been turned on automatically, and you hear the caller's voice over your phone's speaker. If you leave your microphone on all the time, you can start talking when you hear the caller, without lifting the handset. This feature is called *Hands-Free Answer on Intercom*.

Any user in the system can make a voice-signaled call to an idle system phone by pressing (Intercom)(*) then dialing an extension number or pressing an Auto Dial button programmed for voice signaling. (You can make a voice-signaled call *from* either a system phone or a standard phone. However, if you try to make a voice-signaled call *to* a standard phone or an MLC-6 or TransTalk 9000-series phone, it will ring.)

NOTE:
The HFAI feature can be turned on or off only when your phone is idle. Muting your voice while you are on a call only turns off the microphone for the duration of the call.

NOTE:
If HFAI is on and you are already on a call, you will not receive any voice-signaled calls to your extension—they will ring instead.

NOTE:
If you make a voice-signaled intercom call to a *busy* extension, it may result in a voice interrupt on busy call to that extension. See "Voice Interrupt on Busy Calls" for more information.

Voice Interrupt on Busy Calls

A voice interrupt on busy call is a special intercom call that lets you interrupt and speak to another user who is busy on a call and who has the **Voice Interrupt On Busy(#312)** feature activated. When you use Voice Interrupt on Busy, the interrupted user hears two beeps before hearing your voice. Be aware that the third party to whom the interrupted user is speaking will probably hear the two beeps and the faint sound of your voice. Therefore, the message you deliver with the interruption should be brief and discreet. If the interrupted user wants to answer you, he or she can press a programmed Talk-Back button—the interrupted user's response cannot be heard by the third party in this case.

Speakerphone Performance Tips

The speaker on your system phone has a sensitive sound-activated switch. Room acoustics and background noise can affect the proper operation of the speakerphone. To ensure that your speakerphone works effectively, follow these guidelines:

- Avoid placing your phone in areas with high background noise caused by sources such as motor vehicles, manufacturing equipment, loud voices, radios, printers, copiers, typewriters, other noisy office equipment, and heater and air conditioning fans.
- Avoid talking before the other person is finished speaking. When you both talk at the same time, only one person's voice comes through.
- Do not use your speaker to make announcements over a loudspeaker paging system connected to your phone system.
- When talking, always face your phone and stay within two feet of it.
- Place your phone at least six inches (15 cm) away from the edge of your desk.
- If you have difficulty hearing the other party, try increasing the speaker volume. If you have background noise, try turning off the microphone when the party at the other end is speaking and turning it on when you speak. If the difficulty persists, lift your handset to continue the conversation.
- In conference rooms, a separate speakerphone (such as the SoundStation® from Lucent Technologies) is recommended, since the built-in speaker on a system phone is designed for individual use.

Standard Telephones

In addition to system phones, you can connect industry-standard touch-tone or rotary dial phones—and even some feature phones (which have built-in calling features)—directly to the system. You can also combine standard phones on the same extension with system phones or other devices, without using expensive adapters or connectors.

Standard phones can do many of the things that system phones can do, and you can save money by using them in certain situations when a system telephone is not needed. Follow these guidelines when using standard phones:

- Use standard phones as power failure backups; system phones will not work. If you connect standard phones to the first two extensions on the PARTNER ACS processor module, users can place and answer outside calls on the first two lines. If you connect a standard phone to the first extension on each 206 module, users can place and answer outside calls on the first line of each 206 module. You can connect standard phones in combination with system phones at power failure extensions, or you can simply keep spare standard phones at those extensions to serve as replacements in case of a power failure.
- To use a system feature, press (#) (in place of (Feature) used on system phones) followed by its two-digit code when you hear intercom dial tone. For features that use (Intercom) on system phones, dial only the two-digit code when you hear intercom dial tone. (Instructions for using these features on standard phones are included in Chapter 5, ‘‘Feature Reference’’.)
- To use a Speed Dial number, press (#) followed by its two- or three-digit code when you hear intercom dial tone. (For details, see ‘‘Personal Speed Dial Numbers’’ on page 5-204 and ‘‘System Speed Dial Numbers’’ on page 5-255.)
- If **Call Waiting (#316)** is assigned to an extension with a standard phone connected, users hear a call-waiting tone (two beeps) when a second call comes in to the extension. The call-waiting tone is not repeated.
- Use the switchhook on a standard phone to place calls on hold, park a call, transfer a call, answer a call-waiting call, or set up a conference call. (For details, see‘‘Using the Switchhook’’ on page 3-12, or ‘‘Hold’’, ‘‘Transferring Calls’’, ‘‘Answering Calls’’ and ‘‘Conference Calls’’ in Chapter 5.)
- If the standard phone has a message light, use it to notify users of messages. (For details, see ‘‘Message Light On (F09XX)’’ on page 5-186 and ‘‘Message Light Off (F10XX)’’ on page 5-184. For a list of supported phones, see ‘‘Standard Telephones’’ on page 1-15.) Alternatively, if you have a voice messaging system, the light is used to indicate that a message has been left in your mailbox. On a standard phone, the message light flashes *when the phone is idle* to indicate that the extension has received a message.

Ringing Patterns

Standard phones have these ringing patterns:

- An outside call will *ring... ring... ring.*
- An intercom call will *ring-ring... ring-ring... ring-ring.*
- A transferred call, or an unanswered transferred or parked call that is ringing back, will *ring-ring-ring... ring-ring-ring... ring-ring-ring.*

NOTE:
If you use the system with PBX or Centrex lines, the PBX/Centrex distinctive ringing patterns are not passed to phones. Telephones use the ringing patterns described here instead.

Dial Tones

Standard phones have two different dial tones:

- ***Outside dial tone*** is generated by your local telephone company to indicate that you are connected with an outside line.
- ***Intercom dial tone*** is generated by the system to indicate that you are connected with an inside line. You hear this dial tone when you are making an inside, or *intercom*, call.

To hear the difference between the two dial tones, lift the handset. The dial tone you hear (assuming the phone is set to select intercom first, as recommended in this guide) is an intercom dial tone. To hear an outside dial tone, press ⑨.

Using the Switchhook

Some of the call-handling instructions in this guide direct you to “rapidly press and release the switchhook.” Pressing the switchhook for 1/4 to 1 second sends a signal over the line called a *switchhook flash*. However, do not press the switchhook *too* quickly. If you press the switchhook and nothing happens, try again and press it a *little* longer.

NOTE:
If your feature phone has a button labeled “Recall” or “Flash,” use the button instead of pressing the switchhook. If you use the system with PBX or Centrex lines, your PBX or Centrex documentation may tell you to press the switchhook to access PBX or Centrex features. Use the Recall feature instead (see ‘‘Recall (F03)’’ on page 5-218).

Limitations

Each standard device requires one touch-tone receiver to be available in order to dial a call (intercom or outside) or to activate a feature using a code. Each

PARTNER ACS processor module has two touch-tone receivers; each 206 module has one touch-tone receiver; each 400 module has two touch-tone receivers. The combination of modules in your system determines the number of standard devices that can dial simultaneously. For example, if you have one PARTNER ACS processor module, two 206 modules, and two 400 modules, eight standard devices can dial out at the same time. If nine standard devices try to dial out simultaneously, the ninth device will not get dial tone until one of the other eight finishes dialing.(PARTNER MAIL VS contains its own touch-tone receivers and does not require any from the system.)

Also, because standard phones do not have system line or pool buttons, feature buttons, or dedicated function buttons, basic call-handling procedures are sometimes different from those for system telephones. In addition, the following actions *cannot* be performed at a standard telephone:

- You cannot enter programming mode.
- Because there are no line buttons on standard phones, users must use **Direct Line Pickup—Idle Line** to select a specific line; otherwise, the system selects an idle line automatically when the user dials a 9 at intercom dial tone. (For information about **Automatic Line Selection,** see Chapter 5.) Similarly, because there are no pool buttons on standard phones, users must dial pool access codes at the intercom dial tone to request access to an idle pooled line. (See ‘‘Making Calls’’ on page 5-177 for instructions on using pool access codes). Otherwise, the system selects an idle line from a pool automatically when the user dials a 9 at intercom dial tone.
- Unless **Call Waiting (#316)** is assigned to specific standard phone extensions, there is no indication of a second call and an inside caller will hear a busy tone if a standard phone is in use. If Call Waiting is assigned, the user hears a call-waiting tone (two beeps) when a second call comes in for the extension. (The call-waiting tone is not repeated.) The user can use the switchhook to put the first call on hold and speak to the party on the second call and to switch back and forth between the two parties.
- Users can make a voice-signaled call *from* a standard phone, but if users try to make a voice-signaled call *to* standard phone, it will ring because the standard phone does not have a system speaker.
- Users cannot use the **System Password.**
- Users cannot access the following system features: **Account Code Entry**, **Background Music**, **Caller ID Name Display**, **Caller ID Inspect**, **Do Not Disturb**, **Caller ID Logging and Dialing Feature, Exclusive Hold**, **Manual Signaling**, **Privacy**, **Save Number Redial**, **VMS Cover**, **Voice Interrupt on Busy, Voice Interrupt on Busy Talk-Back**, or **Voice Mailbox Transfer.**

  Users can, however, use **Automatic Extension Privacy (#304)** and **Automatic VMS Cover (#310)**, which are similar to the **Privacy** and **VMS Cover** features.

- Do not use **Forced Account Code Entry** with a standard phone, because the phone will not be able to get dial tone and make calls.
- A display on a standard phone will not show Caller ID information, system messages, or **Caller ID Call Logging** information.
- A speaker on a standard phone is not a system integrated speaker; therefore, it cannot receive “voice” type calls, such as a group page.

Feature Phones

A *feature phone* is a standard telephone that has feature buttons in addition to the regular 12-key dial pad. For example, there are feature phones that have programmable auto dial buttons, last number redial buttons, hold buttons, and built-in speakers. You can use most of the system’s dial-code features from a feature phone, and program them onto a feature phone button. However, there are some limitations to what these phones can do.

The capabilities of a feature phone are *in the phone itself*. For example, if you store a number on a feature phone’s auto dial button, that number is stored *in* the feature phone. (This is different from storing a number on a system phone’s Auto Dial button. When you program a button on a system phone, the number is actually stored in the control unit.) Similarly, when you press a hold button on a feature phone, the call is held at the phone itself. (Callers will not hear the system’s Music On Hold. Other phones in the system cannot see that the call is on hold; it appears as a busy line.)

If you want to program an outside number on a feature phone’s auto dial button, you must add a 9 and one or more pauses (if available) before each outside number. (The 9 gets an outside line, and each pause allows a few seconds to get an outside dial tone.)

Note that the feature phone’s last number redial button may not work for an outside call. To redial the last number, use the system’s Last Number Redial feature by pressing # 0 5.

Combination Extensions

A *combination extension* is an extension with two devices connected to it—either two standard devices, or a system phone and a standard device (but *not* two system phones). (For instructions on how to install a combination extension, see the *PARTNER Advanced Communications System Installation* guide.)

The following are examples of useful combination extensions:

- System phone plus standard telephone, for power failure backup on extensions 10, 11, and the first extensions of any 206 or 308EC Module
- System phone plus answering machine
- System phone plus fax machine
- System phone plus headset
- System phone plus an external alert (such as a bell or chime).

The telephones in a combination extension share a single extension in the same way several home telephones share a single line. A system telephone works as it always does and a standard telephone works as it always does when connected to the system.*Only one phone or device can be used at a time*, unless you want to join the two on a single call (the same way two people can pick up the same call on different telephones at home). For example:

- Both phones share the same extension number.
- Both phones share the same *voice path*; that is, when either phone is busy, the extension is busy.
- Calls ring at both phones.
- A second call can ring at the system phone while the standard phone is busy, but do not use the system phone to answer the second call until the standard phone is idle or the first call will be disconnected.
- If you make a voice-signaled intercom call to a combination extension with a system phone, only the system phone signals.
- **Call Waiting (#316)** does not work on a standard phone in combination with a system phone.
- The lights on the system phone show what the standard telephone is doing as well as what the system phone is doing. For an explanation of light patterns, see "Lights" on page 3-4.
- If **Privacy** is active at a combination extension, no other extension can join a call in progress at either a system phone or a standard device. (However, a phone can interrupt a call on a standard device at the *same* extension. For example, if a system phone and modem are combined at an extension, picking up the handset of the system phone could interrupt a modem transmission, even if **Privacy** is active.)

- While on a call on a standard phone, you can use the system phone's dialpad and fixed-feature buttons to handle calls. For example, you can use the system phone to select a specific outside line or pool, and conduct the call on the standard phone. Or, if someone is on a call using the standard phone, someone else can put that call on hold by pressing (Hold) on the system phone. To do this, it is not necessary to lift the handset of the system phone. Held calls do not ring back at a standard phone in a combination extension. To retrieve a held call from the standard phone, use **Direct Line Pickup—Active Line.**
- A standard phone's message light will not light when Background Music is playing through the system phone's speaker.
- If you have Caller ID, only system display phones show the Caller ID information.
- The ringer equivalence number (REN) of a standard device or the combined REN of two devices cannot be greater than 2.0. (The REN of a system phone is 0.0.)

Using Telephones

Your system provides intuitive operation of basic call handling features, plus dial-code features that make it easy for users to handle calls flexibly and efficiently from both system and standard phones. For more information about a specific feature, refer to the feature name in Chapter 5.

Basic Call Handling Features

The following features are available from both system and standard phones:

- Making Calls
- Answering Calls
- Hold
- Call Park
- Transferring Calls
- Conference Calls
- Joining Calls

Dial-Code Features

Dial-code features are features that you access by dialing a feature code at the telephone dialpad. From a system phone, you can dial (Feature) or (Intercom), followed by the two- or three-digit code (or press a programmed Auto Dial button); from a standard phone, you typically dial (#) followed by the two- or three-digit code when

you have intercom dial tone. Some dial-code features are not available on standard phones, as noted by an asterisk (*) in the following list.

- Account Code Entry*
- Background Music*
- Call Coverage
- Call Forwarding/Call Follow-Me
- Call Logging
- Call Pickup
- Conference Drop
- Contact Closure 1
- Contact Closure 2
- Direct Line Pickup—Active Line
- Direct Line Pickup—Idle Line
- Exclusive Hold*
- Group Calling—Ring/Page
- Group Hunting—Ring/Voice Signal
- Group Pickup
- Last Number redial
- Loudspeaker Paging
- Message Light Off
- Message Light On
- Personal Speed Dial Numbers
- Recall
- Save Number Redial*
- Simultaneous Paging
- Station Lock
- Station Unlock†
- System Release Status‡
- System Speed Dial Numbers
- Touch-Tone Enable
- Voice Mailbox Transfer*

---

* Available only on system phones.

† Available only on system phones at extension 10 and 11.

‡ Available only on system display phones.

Using Auxiliary Equipment

4

Overview

There are many ways to set up auxiliary equipment—the setup you choose depends upon your needs and the number of devices you have. This chapter presents some common setups. (It does not cover how to physically connect the equipment, or how to program the features. See the *PARTNER Advanced Communications System Installation* guide for installation instructions, Chapter 5 for programming instructions, and the equipment manufacturer's documentation for complete details on the device you connect.)

This chapter shows various applications for the following types of equipment:

- Answering Machines
- Automated Attendants
- Call Reporting Devices
- Contact Closure Devices
- Credit Card Scanners
- Fax Machines
- Modems
- Voice Messaging Systems

In addition, you can connect the following devices to your system:

- ***Doorphones*** allow visitors to signal extensions by pressing a button on the doorphone; the person who answers a doorphone call can then speak with the visitor at the doorphone. A doorphone is especially useful for providing access to offices or departments after hours. For example, you can install a doorphone outside your building entrance to allow visitors to ring telephones inside the building when the receptionist is not there and the front door is locked.

The system supports up to two Lucent Technologies PARTNER Doorphones or any number of Lucent Technologies Universal Doorphones. Universal Doorphones offer a door unlock feature and can be installed in addition to PARTNER Doorphones.

- ***Loudspeaker paging systems*** allow you to broadcast a message over a large area, by connecting the paging system directly to the PAGE jack on the processor module. The system supports all Lucent Technologies paging systems including the entire PagePac line. The system also supports most paging systems from other manufacturers when the paging systems are connected using a paging interface device. For information about how to use a loudspeaker paging system with the system, see Chapter 5.
- ***PARTNER PassageWay®Solution*** allows you to combine your Personal Computer (PC) running Microsoft® WindowsTM 3.1 or later, Microsoft Windows for Workgroups Version 3.11 or later, or Windows 95 with your phone. You can then use your PC for tasks such as dialing out from an electronic phone list and logging phone calls.
- ***Music-on-hold systems*** allow you to play recorded music or messages to callers while they are on hold, by connecting the audio source to the processor module. The system supports the Lucent Technologies Magic on Hold system and most models from other manufacturers. (The performance of music over telephone lines is a public performance under United States Copyright law. Accordingly, in order for the performance of that music to be lawful, it must be licensed annually to the user by the copyright owners or their representatives. The Magic on Hold system includes the required license for the first year. This license must be renewed annually.)
- ***Remote Administration Units (RAUs)*** allow you to perform System and Centralized Telephone Programming from a remote location.
- ***Extra alerts*** help make users aware of incoming calls. For example, you can use an audible alert (chime, horn, or bell) to replace a phone ring in a noisy area, such as a factory. Similarly, you can use a visual alert (strobe or light) to replace a phone ring in a quiet area, such as a library. Lucent Technologies offers several compatible alerts.
- ***Speakerphones*** provide hands-free two-way operation of a phone without lifting the handset. Combining a speakerphone with a system phone or a standard phone in a conference room or office is an inexpensive way for several people at a meeting to conference in other parties. (In conference rooms, a separate speakerphone—such as the SoundStation from Lucent Technologies—is recommended, since the built-in speaker on a system phone is designed for individual use.)
- ***Headsets*** allow users to hold hands-free conversations. A headset is a combination earphone and microphone worn on the head, useful for receptionists, salespeople, or others who need to have their hands free while talking on the phone. Lucent Technologies offers several compatible headsets.

- ***Specialty Handsets*** are designed for those individuals who need greater functionality than that provided by the handsets on system phones and standard phones. For example, an amplified handset is available for all PARTNER phones for hard-of-hearing users.
- ***In-Range Out-of-Building (IROB) protectors*** are required to prevent electrical surges from damaging your system when phones or other standard devices (such as a doorphone) are installed in a location other than the building where the control unit is installed. The system supports the Lucent Technologies IROB protector, which provides coverage for up to 3,000 feet (915 meters) for standard devices and 1,000 feet (305 meters) for system phones. (IROBs must be installed by a qualified technician.)
- ***Off-Premises Range Extender (OPRE)*** allows you to connect a standard touch-tone phone beyond 3,000 feet (915 meters) in another building on the same continuous property. It also allows you to use a special circuit from your local phone company to provide off-premises station capability.
- ***Electromagnetic Interference (EMI) filters*** allow you to block “noise” generated by a nearby radio station, as well as most electrical devices.
- ***Caller ID devices*** allow you to store and process Caller ID information. Although the system provides functionally integrated, multi-line Caller ID on system display phones, you can connect other devices provided you subscribe to the service from your local phone company and connect the device *directly to the Caller ID line.* You cannot install a Caller ID device directly to a PARTNER extension jack or to a combination extension jack. Refer to “Connecting Caller ID Devices” in the *PARTNER Advanced Communications System Installation* guide for installation details.

To order auxiliary equipment, refer to “Product Ordering Information” on page B-4.

If a Device Has Trouble

NOTE:
Two System Programming procedures can be used to adjust the system settings for auxiliary equipment installed at an extension, if a device has trouble answering calls or dialing out. If a device (such as an answering machine) does not pick up transferred or intercom calls, you can use **Distinctive Ring (#308)** to change the ringing, so that all calls ring like outside calls at that extension. If an autodialing device (such as a modem) has trouble autodialing, use **Intercom Dial Tone (#309)** to change the intercom dial tone for the extension to Machine (outside line) dial tone.

Answering Machines

You can use an answering machine to answer calls at night when no one is around, or during business hours when no one can get to the phone. If you have a Lucent Technologies answering machine with the Call Intercept feature, you can pick up a call that has been answered by the answering machine by joining the call from any system phone. When you do so, the system sends the answering machine a signal that makes it hang up.

You can connect answering machines to your system in the following ways:

- ***Single answering machine.*** This basic setup can cover all the lines in the system. Anyone on the system can call the machine to retrieve messages.
- ***Multiple answering machines.*** If you get too many calls for one machine to cover, connect two or more machines to cover all calls.
- ***Personal answering machine.*** An answering machine can share an extension with a phone in order to answer calls to that extension.

NOTE:
If you have an answering machine and a system phone on the same extension, the answering machine will be able to answer calls only when the phone is idle.

Single Answering Machine

The single answering machine setup (Figure 4-1) serves the entire system. The answering machine is connected to its own extension, and can cover all the lines in the system, or as many lines as you assign to it. You can install the answering machine on an extension by itself, or combine it with a system phone or a standard phone on the same extension (see “Combination Extensions” in the *PARTNER Advanced Communications System Installation* guide).

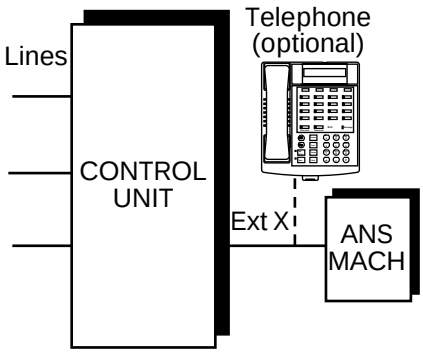

Figure 4-1. Single Answering Machine

To Use

- Go to the machine to manually play back messages.
- From any system extension, make an intercom call to the answering machine extension. When the machine answers, dial its message retrieval code.
- From outside the system, call in on any line assigned to the machine. When the machine answers, dial its message retrieval code.

To Program

1. If extension X is a key extension, use **Line Assignment (#301)** to assign all the lines to extension X that you want the answering machine to cover.

   If extension X is a pooled extension, use **Line Extension Assignment (#314)** to assign all the pools to extension X that you want the answering machine to cover. Also, use **Line Assignment (#301)** to assign any individual lines to extension X that you want the answering machine to cover.

2. Set **Line Ringing** for all lines and pools assigned to extension X to Immediate Ring.

3. Make sure extension X is not assigned as a **Call Waiting (#316)** extension, **Pickup Group Extension (#501), Calling Group Extension (#502), Night Service Group Extension (#504),** or **Hunt Group Extension (#505).**
4. Adjust the answering machine to answer according to your needs. For example, set the machine to answer on the fourth ring during the day so someone has a chance to pick up the call.

Multiple Answering Machines

If a single answering machine cannot handle all your calls, you can set up two or more machines at different extensions (Figure 4-2) so that a call does not go unanswered. If one answering machine is busy, a second call will be answered by the second machine. A setup such as this might be used by a movie theater to announce movie times to people calling for information.

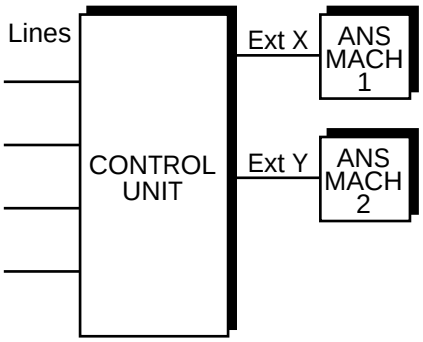

Figure 4-2. Multiple Answering Machines

To Use

- Go to the machines to manually play back messages.
- From any system extension, make an intercom call to an answering machine extension. When the machine answers, dial its message retrieval code.
- From outside the system, call in on any line assigned to the machine. When the machine answers, dial its message retrieval code. Note, however, when calling from outside, you can retrieve messages only from the first machine that answers.

To Program

1. If your system is configured for Hybrid mode, use Line Access Mode (#313) to change extensions X and Y from Pooled to Key.

2. Use **Line Assignment (#301)** to assign all the lines to extensions X and Y that you want the machines to cover.
3. For extensions X and Y, set **Line Ringing** for all lines to Immediate Ring.
4. Make sure extensions X and Y are not assigned as **Call Waiting (#316)** extensions, **Pickup Group Extensions (#501), Calling Group Extensions (#502), Night Service Group Extensions (#504),** or **Hunt Group Extensions (#505).**
5. Adjust both answering machines to answer on a different number of rings (so they do not both try to pick up the same call). For example, set answering machine 1 to 4 rings and answering machine 2 to 6 rings. (If you cannot adjust the two answering machines to answer on a different number of rings, assign some lines to Immediate Ring at extension X and other lines to Immediate Ring at extension Y.)

Personal Answering Machine

A personal answering machine is used to answer all the calls that ring at a certain extension (Figure 4-3). It is useful for the following situations:

- When you do not want to dedicate an extension to an answering machine
- When the extension receives a lot of intercom calls
- When outside calls come through a receptionist and are transferred to the extension
- When an extension has a private line

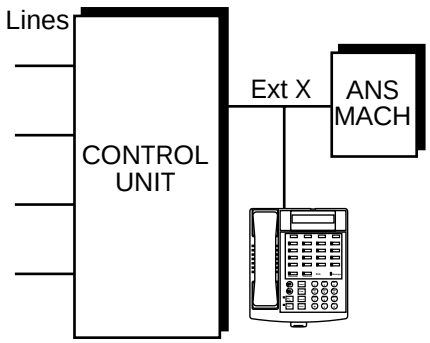

Figure 4-3. Personal Answering Machine

To Use

- Go to the machine to manually retrieve messages.
- From any system extension, make an intercom call to the extension. When the machine answers, dial the message retrieval code.

- From outside the system, call in and have someone transfer you to the extension. When the machine answers, dial the message retrieval code. Or, call in when no one will answer before the answering machine does.

To Program

1. Set **Line Ringing** for all lines and pools assigned to extension X to the desired ring (Immediate, Delayed, or No Ring).
2. If the lines assigned to extension X are also assigned to other extensions, adjust the answering machine to answer on the third or fourth ring so that it does not answer calls before someone else can. (If the answering machine is to cover transferred or coverage calls, make sure the number of rings is less than the amount of transfer return rings set for the extension. This assures that the answering machine will pick up transferred or coverage calls *before* they return to the transfer return extension or are sent to the covering extension.)

   If you intercept a call from the answering machine, you will hear a click to notify you that the answering machine has turned off.

Auto Attendant

An auto attendant answers calls and directs them to a specified extension, Calling Group, or Hunt Group (based on the digits a caller dials after listening to a list of choices in a recorded greeting). For example, the auto attendant could answer calls and tell callers to press 1 for Sales, 2 for Parts, 3 for Service, and so on. An auto attendant can be set up for immediate call handling or delayed call handling.

Backup for Receptionist

A common use of an auto attendant is as a backup for the receptionist. If the receptionist cannot pick up a call within a specified number of rings, the auto attendant handles it. This prevents calls from going unanswered. Figure 4-4 shows how the auto attendant would be connected to your system.

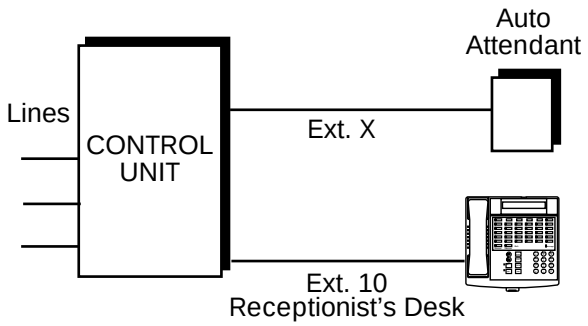

Figure 4-4. Backup for Receptionist

To Use

Follow the instructions packaged with the auto attendant. Make sure that the unit is in backup call-answering mode.

When callers call the main number for your company, the receptionist normally picks up the call. If the receptionist is busy, the auto attendant answers and plays a recorded message, such as: "Please hold for the receptionist or dial an extension number now."

To Program

1. Use **Line Assignment (#301)** to assign all the lines to extension X that you want the auto attendant to cover.
2. Set **Line Ringing** for all lines assigned to extension X to Delayed Ring.
3. Make sure extension X is not assigned as a **Call Waiting (#316)** extension.

4. Use **AA Extensions (#607)** to identify extension X as the auto attendant.
5. Set **Transfer Return Extension (#306)** for extension X to extension 10.
6. Set the auto attendant to pick up within a specific number of rings, so if the receptionist does not pick up a call, the auto attendant will.

Call Reporting Devices (SMDR)

SMDR (Station Message Detail Recording) is a *call reporting* feature that provides records of call activity. Call reporting information provides you with the ability to:

- Detect any unauthorized calls
- Bill clients or projects
- Bill back by department
- Reduce telephone costs by identifying the need to change telecommunications services (like adding a WATS line for calls to a particular area code)
- Print Caller ID information

Call reporting information is recorded after each call is completed. For outgoing calls, the system records information for each call that lasts more than 10 seconds. The timing begins when you lift the handset or press (Spkr) to access an outside line. For incoming calls, the timing begins when the call is answered. Timing stops when the call is disconnected.

The system sends the information through a 1200-baud serial interface to either a serial printer or a call accounting device. The device connects directly to the SMDR jack on the processor module.

Programming

Use the following programming procedures for call reporting:

- **SMDR Record Type (#608)** to specify the type of calls that you want to record for call reporting—either all calls or outgoing calls only.
- **SMDR Top of Page (#609)** to notify the system that the printer has been aligned to the top of a new page.
- **SMDR Output Format (#610)** to identify whether a maximum of 15 digits or 24 digits is printed for dialed numbers on the call report.

  Before changing the output format to 24 digits, check the documentation for your call accounting device to verify that this operation is supported.
- **SMDR Talk Time (#611)** to include the Talk field on the call reports. This field shows the call duration minus the time the greeting was played and the caller waited for someone to answer the call.

- **Forced Account Code Entry (#307)** to identify extensions that are required to enter an account code prior to making outside calls and **Forced Account Code List (#409)** to create a list of valid account codes.
- **Display Language (#303)** to specify the language to be used for display messages. The call report header is printed in the same language as is specified for extension 10.
- The **System Date (#101)** and **System Time (#103)** must be set correctly to ensure accurate call reports.

Call Reports

A *call report* is a page of information that begins with a header. The header includes field names that describe the information in each *call record.* The call record is a line of information that includes the fields shown in Figure 4-5.

	DATE	TIME	NUMBER	DUR.	LINE	STN.	ACCOUNT
C	04/26/97	11:11	1028812015558014	00:01:40	08	18	
C	04/26/97	11:34	1023319085556036	00:04:28	02	32	1725
I	04/26/97	13:35	IN	00:02:12	01	10	
I	04/26/97	13:38	9085559111	00:01:22	12	15	

Figure 4-5. Sample Call Report

Each page includes 59 records. The report has the following fields:

- ***Call Type.*** “C” indicates outgoing calls; “ I ” indicates incoming calls. (**SMDR Record Type (#608)** defines whether incoming calls are reported.)
- ***Date.*** The date of the call is shown in *mm/dd/yy* format, where *mm* is the month, *dd* is the day, and *yy* is the year. The system uses the date set with **System Date (#101)**.
- ***Time.*** The time of the connection is shown in *hh:mm* format, where *hh* is the hour and *mm* is the minute. The system uses the time set with **System Time (#103)** and is shown in 24-hour (military) time.
- ***Number.*** For an outgoing call, this is the dialed number or the speed dial code of a Marked System Speed Dial number (preceded by an “F”). This field holds a maximum of either 15 or 24 digits, depending on the setting of **SMDR Output Format (#610)**. (The Number field in Figure 4-5 is set to hold 24 digits.)

  A “*” character prints as the last digit of a dialed number if the called party hangs up before the system user; a “?” prints if the number of digits dialed exceeds the 15 or 24 digits that this field can hold. If both of these conditions occur, the “ * ” takes precedence.

For an incoming call, “IN” appears, unless the system is set up to receive Caller ID information. In that case, telephone numbers of incoming calls on lines with Caller ID service print in this field. (See‘‘Caller ID’’ on page 5-62 for more information.)

- ***Duration.*** The duration of the call is shown in *hh:mm:ss* format, where *hh* is the hour, *mm* is the minutes, and *ss* is the seconds. This is the total time of the call, including any time the call is on hold or being handled by **the Automatic System Hold or Direct Extension Dial** feature. If an incoming call lasts less than one second, this field contains all zeroes.
- ***Line Number.*** This is the outside line used to make or receive the call. If the system is set for Hybrid Mode and the call is on a line in a pool, the number of the line in the pool prints here, not the pooled number.
- ***Station (Extension).*** This usually is the extension that answered or placed the call. For redirected incoming calls, the last extension on the call is shown on the report, as follows:
  - For transferred incoming calls: the destination extension.
  - For transferred outgoing calls: the originator extension.
  - For pickup calls: the extension picking up the call.
  - For forwarded calls: the extension answering the forwarded call.
  - For coverage calls: the extension answering the coverage call.
- If the calling party hangs up on an **Automatic System Answer** or **Direct Extension Dial** call before someone at an extension answers, this field shows 00.
- **Account Code.** This is the account code (up to 16 digits) assigned to the call. This code typically is used for charging calls to a specific client, project or department.
- **Talk.** This is the time a user spends on an incoming outside call—from the time the user answers the call to the time the call is disconnected from the system. The talk time is shown in hh:mm:ss format, where hh is the hour, mm is the minutes, and ss is the seconds.

  If the call is answered by the **Automatic System Answer or Direct Extension Dial** feature, this field does not include the time the caller listens to the greeting or waits for someone to answer the call. For all other calls, the time in this field is the same as the time in the Duration field.

  This field is included on the call report only if **SMDR Talk Time (#611)** is set to Active.

Considerations

- If a report cannot print because the printer is jammed or out of paper, the system will store up to 45 records in its memory until they can be printed. Additional calls will not be recorded.

- Before including the Talk field on call reports or changing the output format to 24 digits, check the documentation shipped with the call accounting device to verify that these options are supported.
- **If SMDR Talk Time (#611)** is set to Active and **SMDR Output Format (#610)** is set to 24 digits, the combined length of the fields for a call record will be greater than the 80 characters supported by most printers. If call records wrap around to the next line, reduce the font size or increase the characters-per-inch setting for the printer. If necessary, change the SMDR Output Format back to 15 digits.
- In the event of a power failure, records of any calls in progress are lost.
- Inside (intercom) calls are not recorded.
- If you place a call on hold and the caller hangs up, the call is considered complete and the record is sent to the call reporting device.
- Conference calls appear as two outside calls. (This means two records are generated on the report.)

Output Format

The following RS-232 serial transmission protocol is used for SMDR records:

- 1200 baud
- No parity
- 8 data bits
- 2 stop bits

The call reporting feature also supports XON/XOFF protocol, carriage returns, and line feeds.

Serial Printers

Use a 355A adapter, which converts a modular jack interface to an RS-232 25-pin connector, to connect a serial printer to the PARTNER ACS processor module. If you connect a printer, make sure the printer can receive SMDR data in the format described above (refer to the printer's instructions or contact the printer's manufacturer if you need help).

If **SMDR Talk Time (#611)** is set to Active and **SMDR Output Format (#610)** is set to 24 digits, the combined length of the fields for a call record will be greater than the 80 characters supported by most printers. If call records wrap around to the next line, reduce the font size or increase the characters-per-inch setting for the printer. If necessary, change the SMDR Output Format back to 15 digits.

Call Accounting Devices

You can send call information to a call accounting device (such as Lucent Technologies' Call Accounting Terminal—Basic or Plus) if you want to further analyze call activity. The device stores rate table information and processes the information it receives into meaningful reports that can help you optimize your communications system. The primary application for call accounting devices is "accounting," or pricing of the calls.

The call accounting device connects directly to the SMDR jack on the PARTNER ACS processor module and can also print out reports that include summaries by hour, line, and extension. Refer to the manual provided with the call accounting device for instructions on connecting it to your system.

Contact Closure Devices

The Contact Closure Adjunct plugs into a jack on the PARTNER ACS processor module and has two Contact Closures that can be used to control devices such as an electronic door lock (as shown in Figure 4-6) or an alert. The device being controlled must be wired to the Adjunct by an electrician in accordance with local electrical codes. See Chapter A, ''Specifications'', for more information.

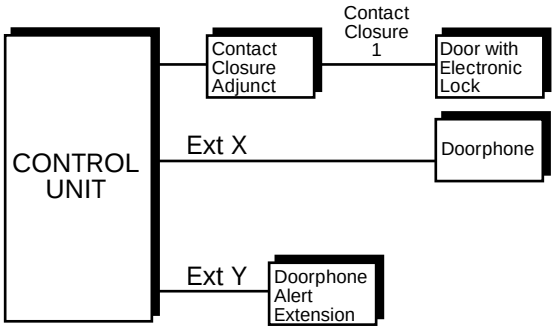

Figure 4-6. Contact Closure Adjunct

Using Contact Closure Devices

You must designate which extensions are eligible to use the Contact Closures and you must program how the contacts will respond when activated. Then users at eligible extensions can program a button on their phones or they can simply use Feature 4 1 (to activate Contact Closure 1) or Feature 4 2 (to activate Contact Closure 2).

For example, suppose Contact Closure 1 can release the door lock on the Deliveries door. You program extension Y as an eligible extension for Contact Closure 1 using **Contact Closure Group (#612)**, and set the **Contact Closure Operation Type (#613)** to 5-Seconds On. When a delivery person uses the doorphone (extension X) to announce a package delivery, the user at extension Y can use Feature 4 1 to activate Contact Closure 1. The lock on the Deliveries door will be released for five seconds, enabling the delivery person to enter.

Programming Contact Closure Devices

1. Use **Doorphone Extension (#604)** to assign Doorphone 1 to extension X.
2. Use **Doorphone Alert Extensions (#606)** to identify extension Y as an alert extension for Doorphone 1.
3. Use **Contact Closure Group (#612)** to assign extension Y to Contact Closure Group 1. This extension can activate Contact Closure 1.
4. Use **Contact Closure Operation Type (#613)** to set Contact Closure 1 to Option 3, “5-Seconds On.”

Credit Card Scanners

Many retail businesses and restaurants use credit card scanners to get instant approval of credit card purchases. The system allows your credit card scanners to share the lines in your system (as shown in Figure 4-7). You can install the credit card scanner on an extension by itself, or combine it with a system phone or a standard phone on the same extension (see “Combination Extensions” in the *PARTNER Advanced Communications System Installation* guide).

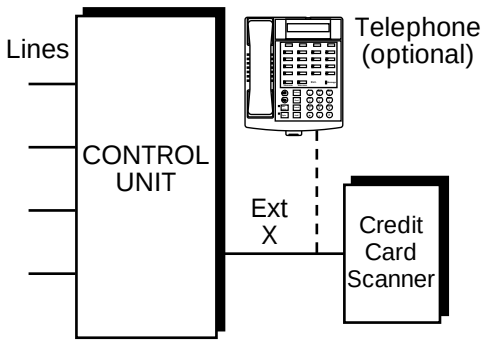

Figure 4-7. Credit Card Scanner

Using Credit Card Scanners

When you make a call on the credit card scanner, an outside line is automatically selected. If you combine the credit card scanner with a system phone or standard phone, you cannot use the phone while the credit card scanner is operating. You can use only one of the devices at a time.

Programming Credit Card Scanners

1. If extension X is a key extension, use **Line Assignment (#301)** to assign the lines you want the scanner to use to extension X.

   If extension X is a pooled extension, use **Pool Extension Assignment (#314)** to assign the pools you want the scanner to use to extension X. Also use **Line Assignment (#301)** to assign any individual lines you want the scanner to use to extension X.
2. Set **Automatic Line Selection** for extension X to select the pools and outside lines that the scanner is to use.
3. Set **Automatic Extension Privacy (#304)** for extension X to Assigned.
4. Make sure extension X is not assigned as a **Call Waiting (#316)** extension.
5. If the scanner has an auto answer feature, turn it off.
6. For multiple scanners, repeat Steps 1–5 for each extension.

Fax Machines

This section suggests several ways you can set up fax machines to work with your system. It includes instructions for programming and using a Fax Management button on a system phone (in order to monitor the status of a fax machine and transfer calls to it with a single touch), and for transferring calls to the fax machine extension.

Using the Fax Management Feature

On any system phone, you can program a button with lights to serve as a Fax Management button. The lights next to this button tell you when the fax machine is in use, available, or not answering (for example, when it is out of paper). You can also use the button to transfer calls from your extension to the fax machine with a single touch.

Programming for Fax Management

To program a Fax Management button, first assign the fax machine extension using **Fax Machine Extensions (#601).** (See Chapter 5 for details.) Then program the fax machine extension number on an Auto Dial button. For more information, see “Auto Dialing’’ on page 5-19.

Using the Fax Management Button

The lights next to the Fax Management button show what is happening at the fax machine—see Table 4-1.

Table 4-1. Fax Management Button Light Patterns

Light Pattern	Indicates...
Red broken flutter	**Fax trouble.** The fax machine is not answering. If broken flutter occurs because the fax machine is out of paper, refill the paper. The light clears the next time the machine transmits or receives a call. If the machine takes longer than four rings to answer, the light shows **fax trouble**; when the machine does answer, the light changes to **fax busy** (red steady).
Red steady	**Fax busy.** The fax machine is busy transmitting or receiving a call.
Green flutter	**Fax transfer return.** A call you transferred to the fax machine was not answered and is returning to you.

Transferring a Call to the Fax Machine

There are two situations in which you would want to transfer a call to your fax machine:

- You answer an outside call and hear a fax machine signaling. (A fax signal is a single beep sequence— *beep.... beep.... beep*). If you hear this, you should transfer the call immediately to the fax machine extension.
- You are on a call with a person who wants to send you a fax using the fax machine that is connected to his or her phone. You can receive the fax by transferring the call to your fax extension. Tell the other party to wait until he or she hears the fax signal before pressing the Start button on the sending fax machine.

In addition, if you have a PARTNER MAIL system and a fax call comes in on a line covered by the PARTNER MAIL system, its Automated Attendant Service can be programmed to automatically transfer the call to a fax extension or (if you have multiple fax machines) to the extension Hunt Group for the fax machines.

There are four ways to transfer the call to the fax extension:

- If you have a Fax Management button, simply press the button. When the fax machine answers, hang up.
- If you do not have a Fax Management button, press (Transfr) plus the fax machine's extension number. When the fax machine answers, hang up.
- On a standard phone, rapidly press and release the switchhook to place the call on hold, then dial the fax extension number and hang up.

- If you have multiple fax machines in an extension Hunt Group, press (Transfr), then (Intercom) (7) (7) plus the fax extension Hunt Group number. When a fax machine answers, hang up.

Setting Up Fax Machines

There are many ways to set up fax machines. The following configurations are basic and easy to use:

- ***Single fax machine.*** Good for light or moderate fax traffic. This basic setup uses a published fax number.
- ***Fax machine line saver.*** Good for light fax traffic, with no need for a published fax number.
- ***Send and receive fax machines.*** Good for high-volume fax traffic. One machine sends, the other receives.

You can install both a telephone and a fax machine on the same extension— see "Combination Extensions" in the *PARTNER Advanced Communications System Installation* guide. This lets you receive both voice and fax calls on the same line (but not at the same time). If you pick up the phone and hear a fax signal, push the Start button on your fax machine and then hang up.

If you are using the PARTNER MAIL system's Automated Attendant Service, you can program PARTNER MAIL to transfer fax calls to the fax extension or a group of fax extensions automatically. Use **Fax Machine Extensions (#601)** to identify fax extensions. If you have multiple fax machines, put all of the fax extensions into a single Hunt Group (any group 1–6) using **Hunt Group Extensions (#505).**

Restricting Dialing from a Fax Machine

You can use dialing restrictions to restrict calling activity on a fax machine. For example, you can use **Outgoing Call Restriction (#401)** to restrict the fax machine to local calls only. For a more detailed discussion of dialing restrictions, see Chapter 2.

Single Fax Machine

The single fax machine setup (shown in Figure 4-8) is good for moderate traffic. The fax machine has its own line (line A), the number of which is published as the fax number. (The fax line can be used by other phones when all other lines are busy.) The fax machine is connected to its own extension (extension X).

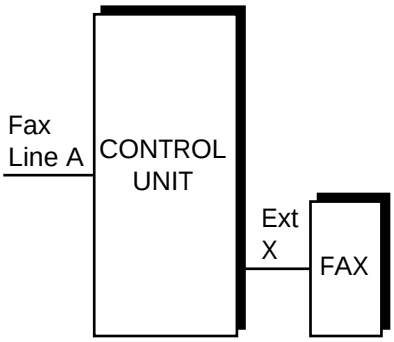

Figure 4-8. Single Fax Machine

To Use

The fax machine automatically answers all calls that come in on the fax line. If a call comes in on another line, you can transfer the call to the fax extension (see "Transferring a Call to the Fax Machine" on page 4-17). If you have programmed a Fax Management button, you can transfer a call to the fax machine with a single touch, as well as monitor the status of the fax machine (see "Using the Fax Management Feature" on page 4-16r).

When you send a fax, the system automatically selects the fax line.

To Program

1. If extension X is a key extension, use **Line Assignment (#301)** to assign *only* line A to extension X.

   If extension X is a pooled extension, use **Pool Line Assignment (#207)** to remove line A from all pools and then use **Line Assignment (#301)** to assign only line A to extension X.

2. Set **Automatic Line Selection** for extension X to select line A only. Set **Automatic Line Selection** to select line A last on all other extensions or remove line A from all other extensions if they should not use it to make outgoing calls.

3. Set **Line Ringing** for line A on extension X to Immediate Ring. On all other extensions, set line A to Delayed Ring or No Ring.

4. Set **Automatic Extension Privacy (#304)** for extension X to Assigned.

5. Make sure extension X is not assigned as a **Call Waiting (#316)** extension, **Pickup Group Extension (#501), Calling Group Extension (#502), Night Service Group Extension (#504),** or **Hunt Group Extension (#505).**

6. To monitor the fax machine, use **Fax Machine Extensions (#601)** to identify extension X as a fax extension and program a Fax Management button by programming the fax machine extension number on an Auto Dial button.

Fax Line Saver

If you do not use your fax machine enough to justify paying for its own outside line, you can put the machine on its own extension. With this setup, you must transfer calls to it manually. If you have programmed a Fax Management button, you can transfer a call to the fax machine with a single touch, as well as monitor the status of the fax machine (see "Using the Fax Management Feature" on page 4-16). Figure 4-9 shows the setup.

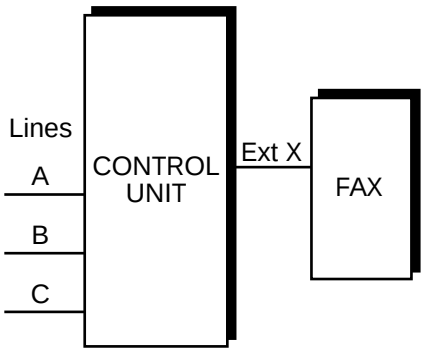

Figure 4-9. Fax Line Saver Setup

To Use

When a person answers a call and hears a fax machine signaling on the other end, the person can transfer the call to extension X—the fax machine extension. To send a fax transmission, simply lift the handset on the fax machine—an outside line will be automatically selected.

To Program

1. If extension X is the key extension, use **Line Assignment (#301)** to assign all lines to extension X.

   If extension X is a pooled extension, use **Pool Extension Assignment (#314)** to assign the pools you want the fax machine to use to extension X. Also use **Line Assignment (#301)** to assign any individual lines you want the fax machine to use to extension X.

2. If extension X is a key extension, set **Automatic Line Selection** for extension X to line A, B, C,....

If extension X is a pooled extension, set **Automatic Line Selection** for extension X to Pool D, line A, B, C,....

3. Set **Line Ringing** for all lines and pools on extension X to No Ring.
4. Set **Automatic Extension Privacy (#304)** for extension X to Assigned.
5. Make sure extension X is not assigned as a **Call Waiting (#316)** extension, **Pickup Group Extension (#501), Calling Group Extension (#502), Night Service Group Extension (#504),** or **Hunt Group Extension (#505).**
6. To monitor the fax machine, use **Fax Machine Extensions (#601)** to identify extension X as a fax extension and program a Fax Management button by programming the fax machine extension number on an Auto Dial button.

Send and Receive Fax Machines

If your business has high-volume fax traffic, you can set up two fax machines, one that only sends and the other that only receives. For example, in Figure 4-10, fax 1 is the *send* machine, fax 2 is the *receive* machine. Line A is the fax line, the number of which is published as the fax number. If fax 2 doesn't answer line A, fax 1 will.

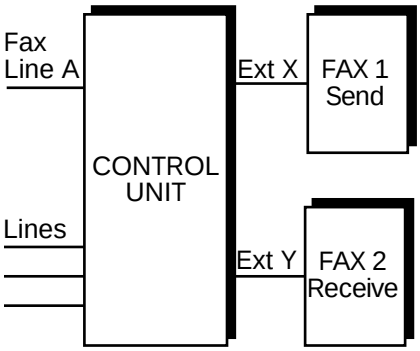

Figure 4-10. Send and Receive Fax Machines

To Use

When you send a fax, an outside line will be automatically selected. Incoming fax calls on the fax line are answered automatically by fax 2. If a fax comes in on a line other than line A, you can transfer the call to fax 2 (see "Transferring a Call to the Fax Machine" on page 4-17). If you have programmed a Fax Management button, you can transfer a call to the fax machine with a single touch, as well as monitor the status of the fax machine (see "Using the Fax Management Feature" on page 4-16). If fax 1 is set for Delayed Ring on line A, fax 1 can pick up fax transmissions when fax 2 does not answer.

To Program Fax 1 (Send—Ext. X)

1. If extension X is a key extension, use **Line Assignment (#301)** to assign one or more lines to extension X (including line A).

   If extension X is a pooled extension, use **Pool Line Assignment (#207)** to remove line A from all pools. Then use **Pool Extension Assignment (#314)** to assign pools to extension X. Also use **Line Assignment (#301)** to assign line A and any other individual lines to extension X.

2. Set **Automatic Line Selection** for extension X to select outside lines first (line A selected last).

   For pooled extensions, set Automatic Line Selection for extension X to select pools and outside lines first (line A selected last).

3. Set **Line Ringing** for line A at extension X to Delayed Ring; set all other lines and pools to No Ring.

4. Set **Automatic Extension Privacy (#304)** for extension X to Assigned.

5. Make sure extension X is not assigned as a **Call Waiting (#316)** extension, **Pickup Group Extension (#501), Calling Group Extension (#502), Night Service Group Extension (#504),** or **Hunt Group Extension (#505).**

6. To monitor the fax machine at extension X, use **Fax Machine Extensions (#601)** to identify extension X as a fax extension and program a Fax Management button by programming the fax machine extension number on an Auto Dial button.

To Program Fax 2 (Receive—Ext. Y)

1. If extension Y is the key extension, use **Line Assignment (#301)** to assign *only* line A to extension Y.

   If extension Y is a pooled extension, use **Pool Line Assignment (#207)** to remove line A from all pools and then use **Line Assignment (#301)** to assign line A and any other individual lines to extension Y.

2. If you want it to be able to dial out when fax 1 is unavailable, set **Automatic Line Selection** for extension Y to select outside lines first (line A selected last).

3. Set **Line Ringing** for line A at extension Y to Immediate Ring; set all other lines and pools at extension Y to No Ring. (For all other extensions, set line A to No Ring or Delayed Ring.)

4. Set **Automatic Extension Privacy (#304)** for extension Y to Assigned.

5. Make sure extension Y is not assigned as a **Call Waiting (#316)** extension, **Pickup Group Extension (#501), Calling Group Extension (#502), Night Service Group Extension (#504),** or **Hunt Group Extension (#505).**

6. To monitor the fax machine at extension Y, use **Fax Machine Extensions (#601)** to identify extension Y as a fax extension and program a Fax Management button by programming the fax machine extension number on an Auto Dial button.

Modems

There are several ways to use modems with your system, as described below.

NOTE:
Modems can connect directly to an extension jack without an adapter. However, if you connect a high-speed modem through the control unit, you may experience some degradation of efficiency and throughput, depending on the quality of the central office lines connected to the system. To solve the problem, either connect modems directly to the network interface jacks, or contact your local telephone company for information about upgrading line quality.

Standalone Modem for Placing Calls Only

A modem and a terminal allow you to dial out and connect to computer bulletin boards and other data services. This setup, which lets you dial out but not receive calls, is shown in Figure 4-11. Note that the telephone is optional and can be used if you want the terminal to share an extension with a phone.

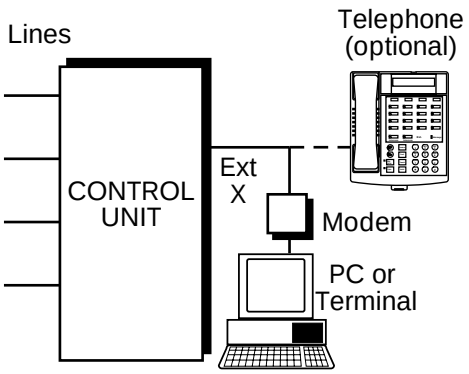

Figure 4-11. Standalone Modem for Placing Calls Only

To Use

Follow the modem manufacturer's instructions.

To Program

1. If extension X is a key extension, use **Line Assignment (#301)** to assign one or more lines to extension X.

   If extension Y is a pooled extension, use **Pool Extension Assignment (#314)** to assign the pools you want the modem to use to extension X. Also use **Line Assignment (#301)** to assign any individual lines you want the modem to use to extension X.

2. If the modem will only dial outside the system, set **Automatic Line Selection** for extension X to select outside lines first. If you also use the modem for calls within the system, set **Automatic Line Selection** to select intercom first, and include a 9 or a pool access code and a couple of pauses in the modem's dialing sequence for outside calls.

3. Set **Line Ringing** for all lines and pools assigned to extension X to No Ring.

4. Set **Automatic Extension Privacy (#304)** for extension X to Assigned.

5. Make sure extension Y is not assigned as a **Call Waiting (#316)** extension, **Pickup Group Extension (#501), Calling Group Extension (#502), Night Service Group Extension (#504),** or **Hunt Group Extension (#505).**

6. Set the auto answer feature of the modem to Off.

Send and Receive Modem

If you need to place and receive calls with the modem, use the setup shown in Figure 4-12. This setup makes line A the primary modem line, but keeps the line available for users at other extensions when all other lines are busy.

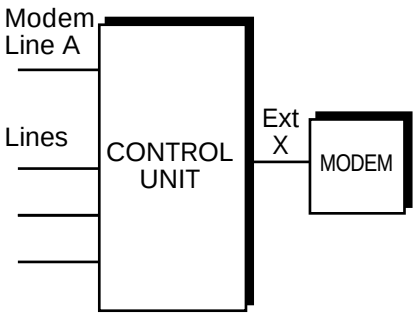

Figure 4-12. Send and Receive Modem

To Use

Calls on the modem line (line A) ring only at extension X. Also, line A is the *last* line selected by other extensions, so the modem line is unavailable for the modem *only when all other lines in the system are being used*.

To Program

1. If extension X is a key extension, use **Line Assignment (#301)** to assign one or more lines to extension X (including line A).

   If extension X is a pooled extension, use **Pool Line Assignment (#207)** to remove line A from all pools. Then use **Pool Extension Assignment (#314)** to assign pools to extension X. Also use **Line Assignment (#301)** to assign line A and any other individual lines to extension X.

2. For extension X, set **Automatic Line Selection** to select pools and outside lines first (line A selected first).

   For all other extensions, set **Automatic Line Selection** so that line A is the last line in the select sequence. That way, the modem line is used for outgoing voice calls only when all other lines are busy.

3. Set **Line Ringing** for line A at extension X to Immediate Ring. Set all other lines or pools assigned to extension X to No Ring. (For all other extensions, set line A to No Ring.)

4. Set **Automatic Extension Privacy (#304)** for extension X to Assigned.

5. Make sure extension X is not assigned as a **Call Waiting (#316)** extension, **Pickup Group Extension (#501), Calling Group Extension (#502), Night Service Group Extension (#504),** or **Hunt Group Extension (#505)**.

Night Service with Auxiliary Equipment

You can set up modems, fax machines, and answering machines to receive calls automatically after hours. When Night Service is on, calls ring immediately at the appropriate extensions, so that no human intervention is required to transfer calls to the fax, modem, or answering machine. When Night Service is off, you can use the auxiliary equipment lines for normal business purposes, so that lines are dedicated to auxiliary equipment *only* after hours.

By putting auxiliary equipment in the Night Service Group as described in this section, auxiliary equipment can start ringing and answering calls whenever you turn Night Service on. In other words, the Night Service button at extension 10 acts like a switch, turning auxiliary equipment on and off, as well as putting the system into Night Service.

NOTE:
If you have a voice messaging system, turning Night Service on *also* activates Night Service operation of the voice messaging system.

Figure 4-13 shows a system with a fax machine and a modem connected to separate extensions. Line A is published as the fax line, and line B is published as the modem line.

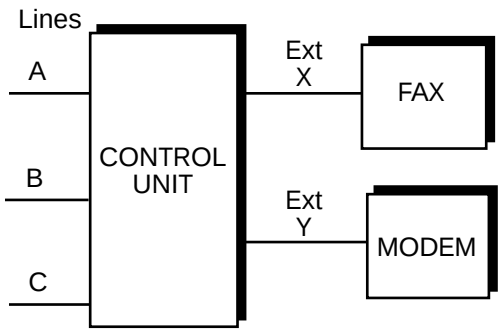

Figure 4-13. Night Service with Fax Machine and Modem

Using Night Service with Auxiliary Equipment

During the day, lines A and B do not ring at extensions X and Y. When you turn Night Service on, calls on line A ring immediately at the fax (extension X). Since that line is not assigned to any other extension in the Night Service Group, only extension X receives fax transmissions. Likewise, with Night Service on, calls on line B ring immediately at the modem (extension Y).

NOTE:
If answering machines are connected to Night Service extensions, you can join a call that was already answered by an answering machine from any system phone. If you have a Lucent Technologies answering machine with the Call Intercept feature, the answering machine drops off the call when you join it.

Programming Night Service with Auxiliary Equipment

1. If extension X and Y are key extensions, use **Line Assignment (#301)** to assign only line A to extension X (for the fax machine to cover) and only line B to extension Y (for the modem to cover).

   If extensions X and Y are pooled extensions, use **Pool Line Assignment (#207)** to remove lines A and B from all pools and **Pool Extension Assignment (#314)** to remove all pools from extensions X and Y. Also use **Line Assignment (#301)** to assign only line A to extension X (for the fax machine to cover) and only line B to extension Y (for the modem to cover).

2. Set **Line Ringing** for line A at extension X and for line B at extension Y to No Ring.

3. Make sure extensions X and Y are not assigned as **Call Waiting (#316)** extensions, **Pickup Group Extensions (#501), Calling Group Extensions (#502),** or **Hunt Group Extensions (#505).**
4. Assign a **Night Service Button (#503)** at extension 10.
5. Assign extensions X and Y to the **Night Service Group (#504).**

Voice Messaging Systems

Three Lucent Technologies voice messaging systems are compatible with your system. You can install one of the three depending on your business needs:

- The **PARTNER MAIL VS Voice Messaging System,** which physically resembles a 206 module, resides in the control unit.
- The **PARTNER MAIL Voice Messaging System** is an auxiliary device that connects to the system through extension jacks.
- **PARTNER Voice Messaging PC Card,** provides four mail boxes and 30 minutes of recording time, including the greeting.

All three Voice Messaging Systems offer your business *complete* call processing features. Specifically, they can:

- Insure that incoming calls are answered and directed to destination extensions correctly and efficiently, using immediate or delayed call handling. (Immediate call handling sends calls directly to the voice messaging system, while delayed call handling allows the receptionist to answer calls first.)
- Answer and route calls during the day and after normal business hours.
- Alleviate the problem of inaccurate or incomplete messages by allowing callers to leave detailed, confidential messages for subscribers.
- Allows subscribers to assign a password to their mailbox, change their personal greeting, and retrieve messages.

The PARTNER MAIL system also offers advanced voice mail features, such as outcalling, group lists, broadcast messages, and fax management. For complete details, contact your Lucent Technologies Representative or local Authorized Dealer, or refer to the documentation provided with the voice messaging system.

Delayed Call Handling

Figure 4-14 shows a PARTNER MAIL VS system that provides delayed call handling. This setup allows the receptionist at extension 10 to provide personalized service by answering calls during normal business hours. The PARTNER MAIL VS system (connected to extensions Z1 and Z2) handles calls when the receptionist is busy or not available, so calls do not go unanswered. The PARTNER MAIL VS system also answers calls received outside of business hours and prompts callers to leave a message in the receptionist's mailbox.

This example also includes two user extensions (X and Y), which are not automatically covered by the PARTNER MAIL VS system. This allows the receptionist to give the caller more personalized service; if the receptionist transfers a call to extension X or Y and that extension does not answer, the call returns to the receptionist. The receptionist can then take a message or send the call to the extension's mailbox if the caller prefers.

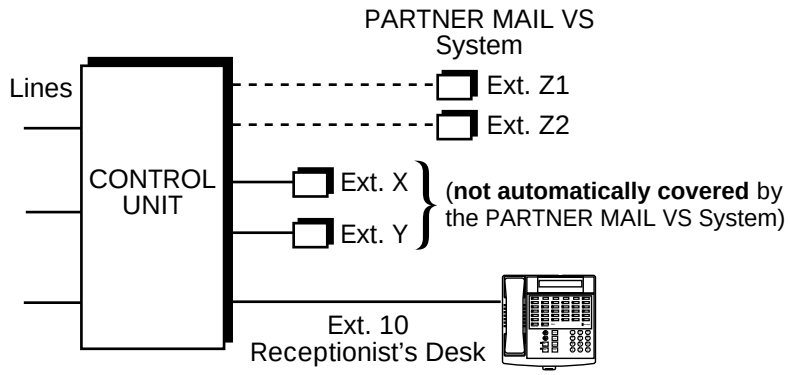

Figure 4-14. Delayed Call Handling

To Use

Follow the instructions packaged with the PARTNER MAIL VS system to install it.

During normal business hours, the PARTNER MAIL VS system uses delayed call handling; the receptionist picks up all calls at extension 10. If the receptionist cannot answer within four rings, the system routes the call to the PARTNER MAIL VS system where the day menu plays to the caller. Outside of business hours (when Night Service is activated at extension 10), outside calls are answered directly by the PARTNER MAIL VS system. Any user who is in the office can pick up calls before the PARTNER MAIL VS system answers.

To Program

The following list summarizes the PARTNER Advanced Communications System programming procedures you use to implement the previous example:

1. Use **Group Call Distribution (#206)** to assign all outside lines to Hunt Group 7 (the VMS hunt group) to provide Automated Attendant Service on these lines.
2. Use **Transfer Return Extension (#306)** for extensions Z1 and Z2 to ensure that calls transferred by the PARTNER MAIL VS system return to extension 10 if they are not answered.
3. Use **Hunt Group Extensions (#505)** to assign extensions Z1 and Z2 to Hunt Group 7 (the VMS hunt group).

4. Set the **VMS Hunt Delay (#506)** to Delayed.
5. Set the **VMS Hunt Schedule (#507)** to Always.
6. Make sure that a **Night Service Button (#503)** is assigned at extension 10—the receptionist's extension. When Night Service is on, callers hear the night menu when no one is available to answer their calls.
7. Program a **Voice Mailbox Transfer** button at extension 10 to enable the receptionist to transfer calls directly to extension X's and Y's mailboxes without first ringing their phones. (This is useful when the receptionist knows that the users at extensions X and Y are away from their desks.)
8. Program an Auto Dial button for the VMS hunt group (Intercom 7 7 7) at extensions X and Y to allow the subscribers to call in for their messages with one touch.

Feature Reference

5

Overview

This chapter provides reference information for programming and using system features. *Features are listed in alphabetical order.* System Programming procedures include the procedure code (# and three-digit number) in the heading; dial-code features include the feature code (F for (Feature) or I for (Intercom), plus a two- or three-digit code). Headings without codes are general call-handling topics or Telephone Programming procedures.

Each feature includes the following information, if applicable:

- Description
- Examples
- Related Features
- Programming
- Considerations
- Using
- Valid Entries (✔ = factory setting)

This chapter gives step-by-step instructions, using the following conventions:

- All of the instructions in this chapter assume that system phones select outside lines or pools first and standard phones select intercomStandard phones; Automatic Line Selection for first (as determined by each extension's setting for **Automatic Line Selection**).

  See Chapter 2 for a review of the methods and buttons you can use while in programming mode.

- Programming instructions tell you to use the (Next Data) button to change values for specific settings. You can, however, enter a value using the dialpad if you prefer. Similarly, there are different ways to exit programming mode as described in Chapter 2—use the method with which you are most comfortable.

- For Telephone Programming, this chapter provides only the instructions for Centralized Telephone Programming. To program from individual extensions, users should refer to their User Instruction Cards.
- Display prompts in the chapter are shown as they appear on PARTNER-model phones. If you are using an MLS-model phone, some of these prompts may be abbreviated.

If you have trouble finding a feature name in this chapter, consult the index. Perhaps you know the feature by a different name. Or, if you know the feature by its System Programming procedure code or feature dial code, consult the numerical listings below to find the correct feature name.

Numerical Listing of Procedure Codes and Dial Codes

System Programming Procedures

#101	System Date	#312	Voice Interrupt On Busy
#102	System Day	#313	Line Access Mode*
#103	System Time	#314	Pool Extension Assignment*
#104	Number of Lines	#315	Pool Access Restriction*
#105	Transfer Return Rings	#316	Call Waiting Outgoing Call Restriction
#107	Recall Timer Duration	#317	Caller ID Log Answered Calls
#108	Rotary Dialing Timeout	#318	Caller ID Call Log Line Association
#109	Outside Conference Denial	#403	System Password
#110	Automatic System Answer Delay*	#404	Disallowed Phone Number Lists
#111	Automatic System Answer Button*	#405	Disallowed List Assignments
#112	Direct Extension Dial Delay*	#406	Emergency Phone Number List
#113	Direct Extension Dial Button*	#407	Allowed Phone Number Lists
#114	Outgoing Call Restriction Button*	#408	Allowed List Assignments
#115	Wake Up Service Button	#409	Forced Account Code List
#116	Call coverage Rings	#410	Star Code Dial Delay
#117	VMS Cover Rings	#501	Pickup Group Extensions
#119	Ring on Transfer	#502	Calling Group Extensions
#121	Automatic System Answer Mode*	#503	Night Service Button
#122	Caller ID Type	#504	Night Service Group Extensions
#123	Backup Programming—Automatic	#399	Copy Settings
#124	Backup Programming—Manual	#505	Hunt Group Extensions
#125	Restore Programming	#506	VMS Hunt Delay
#201	Dial Mode	#507	VMS Hunt Schedule
#203	Hold Disconnect Time	#601	Fax Machine Extensions
#204	Automatic System Answer Lines*	#602	Music on Hold

#205	Direct Extension Dial Lines*	#603	Hotline
#206	Group Call Distribution	#604	Doorphone Extension 1
#207	Pool Line Assignment*	#605	Doorphone Extension 2
#208	Line Coverage Extension	#606	Doorphone Alert Extensions
#301	Line Assignment	#607	AA (Automated Attendant) Extensions
#302	Line Access Restriction	#608	SMDR Record Type
#303	Display Language	#609	SMDR Top of Page
#304	Automatic Extension Privacy	#610	SMDR Output Format
#305	Abbreviated Ringing	#611	SMDR Talk Time*
#306	Transfer Return Extension	#612	Contact Closure Group
#307	Forced Account Code Entry	#613	Contact Closure Operation Type
#308	Distinctive Ring	#614	Music On Hold Volume
#309	Intercom Dial Tone	#728	System Reset—Programming Saved
#310	Automatic VMS Cover	#311	External Hotline

* PARTNER ACS Release 2.0 or later

Dial-Code Feature*

F01	Do Not Disturb	F14	Voice Mailbox Transfer
F02	Exclusive Hold	F15	VMS Cover
F03	Recall	F16	Caller ID Name Display
F04	Save Number Redial	F17	Caller ID Inspect
F05	Last Number Redial	F18	Voice Interrupt On Busy Talk-Back
F06	Conference Drop	F19	Background Music
F07	Privacy	F20, *XX,XX*	Call Coverage†
F08	Touch-Tone Enable	F21	Station Lock
F09*XX*	Message Light On	F22	Station Unlock
F10*XX*	Message Light Off	F23	Caller ID Call Logging**
F11,*XX*,*XX*	Call Forwarding/Call Follow-Me	F41	Contact Closure 1
F12	Account Code Entry	F42	Contact Closure 2

F13*XX*	Manual Signaling (beep or ring)	F59	System Release Status
F13**XX*	Manual Signaling (voice signal)		

Intercom Dial-Code Features*

I6*XX*	Call Pickup
I66*G*	Group Pickup
I68*LL*	Direct Line Pickup—Active Line
I70	Loudspeaker Paging
I*70	Simultaneous Paging
I7*G*	Group Calling—Ring
I*7G	Group Calling—Page
I77*G*	Group Hunting—Ring
I*77G	Group Hunting—Voice Signal
I8*LL*	Direct Line Pickup—Idle Line
I891	Automatic System Answer Record/Playback**
I892	Direct Extension Dial Record Playback**
I6*XX*	Call Pickup
I66*G*	Group Pickup
I68*LL*	Direct Line Pickup—Active Line
I70	Loudspeaker Paging
I*70	Simultaneous Paging
I7*G*	Group Calling—Ring
I*7G	Group Calling—Page
I77*G*	Group Hunting—Ring

* A 5-Slot carrier can provide a maximum of 40 extensions or a maximum of 19 lines; a 2-Slot carrier can provide a maximum of 16 extensions or a maximum of 7 lines. References in this guide are to 40 extensions and to 19 lines, even though no system can be configured with both maximums simultaneously. Your system does not have to be configured for the maximum of either extensions or lines.

F represents the (*Feature*) button; I represents the (*Intercom*) button; XX represents a system extension number; G represents a single-digit group number; and LL represents a system line number.

† PARTNER ACS Release 2.0 or later.

AA (Automated Attendant) Extensions (#607)

Description

This System Programming procedure lets you identify extensions where auto attendants are connected to the system. Doing so lets the system notify users with display phones when they are receiving a call that has been transferred from the auto attendant. (This procedure applies only to auto attendants—do not use it with the Automated Attendant Service of a voice messaging system.)

Related Features

- For each auto attendant extension, use **Transfer Return Extension (#306)** to identify the extension to which a call should be routed if the destination extension does not answer.
- Set **Automatic Extension Privacy (#304)** to Not Assigned for the auto attendant extension if you want to be able to intercept calls routed to the device.

Considerations

- Chapter 4 provides information about using auto attendants with the system.
- On system display phones, Automated Attendant displays when a call is being transferred from an auto attendant. Transfer from AA or Transfer from Auto Att displays when a call transferred by an auto attendant was not answered and is being returned to your extension.

Valid Entries

1 = Assigned
2 = Not Assigned ✔

Programming

(See Figure 2-3 on page 2-23 for the location of special programming buttons such as System Program and Enter on system phones.)

To identify an extension where an auto attendant is installed:

1. Press Feature 0 0 System Program System Program # 6 0 7 at extension 10 or 11.

2. Enter the extension number to which the auto attendant is connected. For example, to select extension 27, press 2 7.
3. To assign or unassign the extension, press Next Data until the appropriate value displays.
4. To assign or unassign a second auto attendant extension, press Next Item or Prev Item until the extension number shows on the display. Then repeat Step 3.
5. Select another procedure or exit programming mode.

Abbreviated Ringing (#305)

Description

This feature applies only to system phones.

This System Programming procedure activates or deactivates Abbreviated Ringing at the system phone at a specific extension. When a user is on a call and Abbreviated Ringing is Active, any incoming call rings only once. The green light next to the line or pool button flashes until the call is answered or the caller hangs up (or for a transferred call, until it returns to the transfer return extension). This feature prevents incoming calls from distracting users when they are busy on another call. To allow calls to ring repeatedly, set Abbreviated Ringing to Not Active.

Considerations

- Abbreviated Ringing is typically set to Not Active for receptionists and others who handle many calls quickly, so they have an audible reminder of incoming calls.
- Abbreviated Ringing applies to outside, transferred, *and* intercom calls.
- The volume of an abbreviated ring is lower than a normal ring.
- Calls to a busy extension ring at a lower volume than normal even if Abbreviated Ring is set to Not Active.

Valid Entries

1 = Active (incoming calls ring once) ✔
2 = Not Active (incoming calls ring repeatedly)

Programming

(See Figure 2-3 on page 2-23 for the location of special programming buttons such as System Program and Enter on system phones.)

To change the Abbreviated Ringing setting for an extension:

1. Press Feature 0 0 System Program System Program # 3 0 5 at extension 10 or 11.
2. Enter the number of the extension to be programmed. For example, to program extension 12, press 1 2.
3. To set Abbreviated Ringing, press Next Data until the appropriate value displays.
4. To set Abbreviated Ringing for another extension, press Next Item or Prev Item until the extension number shows on the display. Then repeat Step 3.
5. Select another procedure or exit programming mode.

Account Code Entry (F12)

Description

This feature can be used only from a system phone.

This feature lets a user enter an account code (up to 16 digits) for an outside call (incoming or outgoing). An account code typically is used to identify a department, project, or client for charge-back or tracking purposes.

Related Features

- You can use **Forced Account Code Entry (#307)** to identify system phone extensions that are to enter an account code prior to dialing *any* outside number (including those on the Emergency Phone Number List). A *forced* account code must be entered at the beginning of a call; however, a different account code can be entered any time during the call.
- You can use **Forced Account Code List (#409)** to create a list of valid account codes, which should be distributed to the appropriate users. If a Forced Account Code List exists, the system checks the list whenever a user enters a forced account code. If the code is valid, the system provides the user access to an outside line. If the code is invalid, the system denies the user access to an outside line.

- For faster entry of frequently used account codes, you can program an account code on an Auto Dial button or as a System or Personal Speed Dial number (but not as a Marked System Speed Dial number). See **Auto Dialing**, **System Speed Dial Numbers**, and **Personal Speed Dial Numbers** for programming instructions.

Considerations

- When an account code is entered during a call, the caller on the other end does not hear the touch-tone digits dialed.
- If SMDR is used, the account code assigned to incoming or outgoing calls prints on call reports. (See "Call Reporting Devices (SMDR)" on page 4-10 for more information about call reporting.)
- If an account code is entered for an *outgoing* call and the call is transferred to another extension, the call report shows the *originating* extension as the owner of the call. Conversely, if an account code is entered for an *incoming* call and the call is transferred to another extension, the call report shows the *destination* extension as the owner of the call.
- Account codes can be changed during a call. However, only the person who entered the original account code can enter a different account code. SMDR prints changed account codes as follows:
  - For optional or forced account code entry *without* a Forced Account Code List, the call report prints the last account code entered.
  - For forced account code entry *with* a Forced Account Code List, the call report prints the last valid account code entered. If the changed account code is not valid, the report prints the original account code.
- If a Forced Account Code List exists, you can check to see if an account code is valid when entering or changing an account code by pressing (Feature) (1) (2) after entering the account code. If the account code is not valid, you will hear a denial tone.
- The Lucent Technologies Call Accounting Terminal uses less than 16 digits for an account code. Refer to the device's documentation to determine the maximum digits supported.
- You can program the Account Code Entry feature code on a button on a system phone. It is recommended that you use a button with lights. (This button can be used for optional Account Code Entry or Forced Account Code Entry.)

Programming

(See Figure 2-3 on page 2-23 for the location of special programming buttons such as (System Program) and (Enter) on system phones.)

To program an Account Code Entry button:

1. Press (Feature) (0) (0) (System Program) (System Program) (Central Tel Program) at extension 10 or 11.
2. Enter the number of the extension to be programmed with this feature.
3. Press a programmable button, preferably one with lights.
4. Press (Feature) (1) (2).
5. Program another button for this extension or exit programming mode.

Using

To enter or change an *optional* account code:

1. From a system phone, if a password is programmed for the system, you must enter it before lifting the handset. (See "**System Password (#403)**" for more information.)
2. After lifting the handset (or while already active on an outside call), press the programmed Account Code Entry button or press (Feature) (1) (2).
   If the Account Code Entry button has lights, the green light turns on.
3. Enter an account code using one of the following methods:
   - Dial it manually using the phone's dialpad.
   - Dial a System or Personal Speed Dial number programmed with the account code.
   - Press an Auto Dial button programmed with the account code.
4. Press the programmed Account Code Entry button or press (Feature) (1) (2) to indicate the end of the code.
   If the Account Code Entry button has lights, the green light turns off.
5. Make the call, if you are not already on a call.
6. To change the account code, repeat Steps 2 through 4.

To enter or change a *forced* account code:

1. From a system phone, if a password is programmed for the system, you must enter it before lifting the handset. (See "**System Password (#403)**" for more information.)
2. Lift the handset or press (Spkr).
3. Press the programmed Account Code Entry button or press (Feature) (1) (2).
   If the Account Code Entry button has lights, the green light turns on.
4. Enter an account code (supplied by your System Manager) using one of the following methods:
   - Dial it manually using the phone's dialpad.
   - Dial a System or Personal Speed Dial number programmed with the account code.

- Press an Auto Dial button programmed with the account code.

5. Press an idle line or pool button:
   - If a Forced Account Code List exists and the account code is valid (or if the Forced Account Code List is empty), you hear outside dial tone. Go to Step 6.
   - If a Forced Account Code List exists and the account code is not valid, you are denied access to the outside line. Verify the account code with your System Manager, then repeat this procedure starting from Step 1.
6. Make the telephone call.
7. To change the account code while on a call:
   a. Press the programmed Account Code Entry button or press Feature 1 2.
   b. Enter a different account code.
   c. Press the programmed Account Code Entry button or press Feature 1 2.
   If a Forced Account Code List exists and the account code is invalid, you hear a denial tone. Verify the account code, then repeat Step 7, making sure to enter a valid account code.

Allowed List Assignments (#408)

Description

This System Programming procedure lets you assign up to eight Allowed Phone Number Lists to a specific extension.

Related Features

You must use **Allowed Phone Number Lists (#407)** to create the lists of allowed telephone numbers *before* you use this procedure.

Valid Entries

1 = Assigned to extension
2 = Not Assigned to extension✔

Programming

(See Figure 2-3 on page 2-23 for the location of special programming buttons such as System Program and Enter on system phones.)

To assign Allowed Phone Number Lists to an extension:

1. Press Feature 0 0 System Program System Program # 4 0 8 at extension 10 or 11.
2. Enter the number of the extension to be programmed. For example, to program extension 27, press 2 7. A display similar to the following appears:

```
AllowTo 27
List Number:
```

3. Enter the list number (1–8). For example, to select list 1, press 1.
4. To assign or unassign the list, press Next Data until the appropriate value displays.
5. At this point:
   - To assign or unassign another list to this extension, press Next Item or until the list number shows on the display. Then repeat Step 4.
   - To program another extension, press Next Procedure or Prev Procedure and begin at Step 2.
6. Select another procedure or exit programming mode.

Allowed Phone Number Lists (#407)

Description

This System Programming procedure specifies telephone numbers that users can dial regardless of other dialing restrictions, as long as they have access to an outside line. For example, if you restrict an entire category of calls through **Disallowed Phone Number Lists (#404),** you can permit calls to a specific number in that category by placing that number on an Allowed Phone Number List. Using this procedure, you can create up to eight lists of up to 10 telephone numbers each.

Related Features

- After completing this procedure, you must use **Allowed List Assignments (#408)** to assign the Allowed Phone Number Lists to specific extensions.
- Allowed Phone Number Lists override **Disallowed Phone Number Lists (#404)** and **Outgoing Call Restriction (#401),** but not **Line Access Restriction (#302)** or **Pool Access Restriction (#315)** or **Night Service Button (#503)** with a **System Password (#403)**. (There are other ways of overriding restrictions—see **Marked** System Speed Dial Numbers, **Emergency Phone List Numbers (#406)**, and **System Password (#403)** for more information.)
- The entries you must make to permit or restrict long-distance calls differ depending on the setting for **Toll Call Prefix (#402)**. This setting tells the system whether a “0” (for operator-assisted calls) or “1” (for direct-dial calls) is required when users make long-distance calls.
- If **Star Code Dial Delay (#410)** is active, after a valid star code is dialed, the system resets the dialing restrictions to check the number beginning with the first digit after the star code II &starcode[v].

Considerations

- Each list entry can include up to 12 digits. You can use the wildcard character (by pressing the (Hold) button on a system phone) to match any single digit (it appears as “!” on the telephone display).
- If you are restricting an extension from placing long-distance calls, do not place numbers beginning with a “0” on an Allowed Phone Number List for the extension. Once a user is active on an operator-assisted call, the user will be able to avoid dialing restrictions by asking the operator to dial restricted numbers.
- If you want to go to another programming procedure when entering phone numbers in a list, you must use (Next Procedure) or (Prev Procedure) to do so since entering (#) and a three-digit code will be considered data for the telephone number.

Valid Entries

Up to 12 digits including 0–9, (#), (*), and (Hold) (any single digit)

Examples

The examples below show how you would enter telephone numbers for an Allowed Phone Number List in Step 4 of “Programming.” When an Allowed List is assigned to an extension, users can dial numbers on that list, even if the numbers would otherwise be restricted.

- **Specific Telephone Numbers.** Enter the phone number exactly as you would dial it. For example, to allow calls to the number 201 555-1111, make the following entries:
  - *Toll Call Prefix required*
  - 12015551111
  - *Toll Call Prefix not required*
  - 2015551111
- **All Telephone Numbers in One Area Code.** The following list entries allow calls to the 800 area code:
  - *Toll Call Prefix required*
  - 1800
  - *Toll Call Prefix not required*
  - 800

Programming

(See Figure 2-3 on page 2-23 for the location of special programming buttons such as (System Program) and (Enter) on system phones.)

To create a list of Allowed Phone Numbers:

1. Press (Feature) (0) (0) (System Program) (System Program) (#) (4) (0) (7) at extension 10 or 11.
2. At the `List Number:` prompt, enter a list number (1–8). For example, to select the first list, press (1).
3. At the `Entry:` prompt, select a list entry (01–10). For example, to select the first entry, press (0) (1).
4. At the `Data- - - - - - - - - - - -` prompt, enter the first telephone number.
5. **To save the telephone number in memory,** you must press (Enter).
6. At this point:

- To change the phone number you just entered, press (Remove) and repeat Steps 4 and 5.
- To delete the phone number you just entered, press (Remove).
- To add other phone numbers to this list, press (Next Item) and repeat Steps 4 and 5.
- To create another list, press (Next Procedure) or (Prev Procedure) and go to Step 2.

7. Select another procedure using (Next Procedure) or (Prev Procedure) or exit programming mode.

Answering Calls

Description

This section describes how users can answer calls ringing at their own extensions. Additional features enable users to pick up calls at other extensions—see “Related Features” below.

Related Features

- A user can join a call in progress at another extension, as long as **Privacy** is not on for that extension (see **Joining Calls**).
- A user can answer a call ringing at another specific extension or at any extension in a group. For more information, see **Call Pickup** and **Group Pickup**.
- A user can use **Direct Line Pickup—Active Line** to answer calls on lines not assigned to the user’s phone.
- A user can program the **Voice Interrupt on Busy Talk-Back** feature on a button with lights to respond to a voice interrupt on busy call. Also see **Voice Interrupt On Busy (#312)**.
- You can use **Call Waiting (#316)** to specify standard phone extensions that can receive a call-waiting tone and a second incoming call.

Considerations

- Calls that are answered by pressing a pool button can be held, conferenced, or transferred; however, pool buttons cannot be used to join calls.
- There are several ways to access a line for answering calls:
  - — On either a system phone or a standard phone, lift the handset to answer a ringing call (if more than one call is ringing at a system phone, you get the call that has been ringing for the longest time).
  - — On a system phone, press a specific line, pool, or (Intercom) button. You can also use Direct Line Pickup to pick up a ringing or held call, or to join an active call, by dialing (Intercom) (6) (8) and the two-digit line number.
  - — On a standard phone, you can use Direct Line Pickup to pick up a ringing or held call, or to join an active call on a specific line: at intercom dial tone, dial (6) (8) and the two-digit line number.
- For system phones and most standard phones, the user can identify the type of call by the system’s ringing patterns. System display phones can also show in the display the type of call that is ringing at the extension. (See“Ringing Patterns” on page 3-7.) Note that there are no unique ringing patterns for coverage calls or forwarded calls.

How to Answer Calls Ringing at Your Extension

System Phone

You can answer a call on any line or pool that is ringing, or select a specific line or pool if more than one is ringing:

- When the telephone is ringing, lift the handset.

  You are connected to the incoming call. If more than one line or pool is ringing, you are connected to the line or pool that has been ringing for the longest time. If the call is an intercom call and you have a display phone, the caller's extension number, and name if programmed, appear on your display until you pick up the handset or press (Spkr).

- To answer a call on a specific line, pool, or intercom button:

  1. Press the line, pool, or button for the line you want to answer.
  2. Lift the handset or press (Spkr).
     You are connected to the call.

- To answer a call when you are already on a call:

  1. Press (Hold).
     The call you are on is placed on hold.
  2. Press the button for the new call.
     You are connected to the new call.
  3. To return to the first call, put the second call on hold; then press the line, pool, or (Intercom) button for the first call.

- To answer a voice-signaled call (your phone beeps and you hear the caller's voice):

  — If the microphone is on, you can speak after the beep.

  — If the microphone is not on, press (Mic/HFAI) or lift the handset.

- To respond to a voice interrupt on busy call (you hear two beeps and the originator's voice—be aware that the third party to whom you are speaking probably also will hear the two beeps and the faint sound of the originator's voice):

  1. Ask the party with whom you are speaking to hold, but do not put the call on hold.
  2. Press the Voice Interrupt On Busy Talk-Back button.
     The green light next to the Voice Interrupt On Busy Talk-Back button turns on. Voice Interrupt On Busy Talk-Back is activated.
  3. Respond to the originator of the voice interrupt on busy call.
     The third party with whom you were originally speaking does not hear your response, but you can hear that third party.

4. Press the Voice Interrupt On Busy Talk-Back button again (whether or not the originator has hung up) to resume the conversation with the third party.
   The green light next to the Voice Interrupt On Busy Talk-Back button turns off. Voice Interrupt On Busy Talk-Back is deactivated. The originator hears two beeps if he or she did not hang up previously.

- To answer a coverage call:

  1. If your phone is a covering extension and it rings, check your display to see if the ringing call is a coverage call. Also, if you have an Auto Dial button for the originating extension, the green light next to the button flutters while the coverage call is ringing at your extension (and it is the next ringing call you will answer if you lift the handset).
  2. Lift the handset.
     You are connected to the coverage call.
  3. The first coverage call to ring at your extension is identified in the display. If more than one coverage call rings at your extension, you can press the Caller ID Inspect button. Then press the line, pool, or (Intercom) button next to the flashing green light to view the number of the extension from which a coverage call is being sent.

Standard Phone

If your standard phone has a button labeled “Recall” or “Flash,” use this button whenever you are instructed to press the switchhook.

- To answer a call:

  When the telephone is ringing, lift the handset.
  You are connected to the incoming call.

- To answer a call when you are already on a call (you hear a call waiting tone—two beeps):

  1. Press the switchhook.
     The call you are on is placed on hold and you are connected to the new call.
  2. To return to the first call, press the switchhook again.
  3. You can continue to press the switchhook to move back and forth between the two calls.
     You cannot transfer either party, conference in additional parties, or use feature codes while both calls are active.

Auto Dialing

Description

Auto Dial buttons can be programmed only on system phones.

This Telephone Programming procedure lets system phone users dial outside numbers, extension numbers, feature codes, or account codes with a single touch, by pressing a programmed button. If an extension number is stored on an Auto Dial button, the user can dial, signal, or transfer calls to the extension by pressing the button. An Auto Dial number can be stored on any programmable button (a button with no line or pool assigned) on a system phone.

Related Features

- You can use the Auto Dial button instead of dialing the two-digit extension number required for these features: **Call Coverage, Call Forwarding/Call Follow-Me**, **Call Park**, **Message Light On**, **Message Light Off**, **Station Unlock**, and **Voice Mailbox Transfer**.
- To set up a Fax Management button, program the fax extension number on an Auto Dial button with lights. Special light patterns on the Auto Dial button for the fax extension indicate fax machine status. Chapter 4 provides more information about using a Fax Management button. Identify fax extensions using **Fax Machine Extensions (#601)**.
- You can include special functions, such as a Pause, in the Auto Dial number. See **Special Dialing Functions** for more information.
- An Auto Dial number can begin with a star code; the system automatically inserts a delay based on the **Star Code Dial Delay (#410)** setting.

Considerations

- If you program an extension number on a button with lights, the lights show calling activity at the extension (see "Lights" on page 3-4).
- You can connect an Intercom Autodialer to the system phones at extension 10 and 11 to have Auto Dial buttons for all of the extensions in your system.
- Each user can have only one Auto Dial button—either on the system phone *or* on the Autodialer—for another extension in the system. That button can be programmed for intercom ringing, intercom voice signaling, *or* manual signaling.
- When programming emergency numbers for Auto Dialing and/or making test calls to those numbers, you should: 1) Remain on the line and briefly explain to the dispatcher the reason for the call before hanging up and 2) Perform such activities in the off-peak hours, such as early morning or late evening.
- Auto Dial buttons do not override dialing restrictions for an extension.

- PARTNER-6 phones have only four buttons available for lines, pools, and/or Auto Dial numbers.
- A combined total of 576 outside Auto Dial and Personal Speed Dial numbers can be programmed.
- For PBX or Centrex systems that require a dial-out code to make calls outside the PBX or Centrex system, include the dial-out code followed by one or more pauses (if available) on an Auto Dial button for a number outside the PBX or Centrex system. (See "Changing Settings to Support PBX or Centrex Services" on page 2-11 for more information.)

Examples

The examples below show some possible entries for an Auto Dial number in Step 4 of "Programming."

- **Outside Phone Number.** Enter the phone number (up to 28 digits) exactly as you would dial it. For example, to program 555-2398, press 5 5 5 2 3 9 8.
- **Extension Number.** Press the left Intercom button and enter the two-digit extension number. Press * before the extension number to program the Auto Dial button to voice signal an extension. For example, to program extension 20 for voice signaling, press * 2 0. The display reads:

```
Intercom *20
```

- **Feature Code.** Enter the appropriate code. For example, to program a button to turn on the message light at extension 20, press Feature 0 9 2 0. When you press the programmed button, the Message Light at extension 20 turns on.

Programming

(See Figure 2-3 on page 2-23 for the location of special programming buttons such as System Program and Enter on system phones.)

To program an Auto Dial button:

1. Press Feature 0 0 System Program System Program Central Tel Program at extension 10 or 11.
2. Enter the number of the extension to be programmed.
3. Press a programmable button.
4. Enter an outside phone number, feature code, account code, or PBX/Centrex feature access code; or press left Intercom and enter an extension number.
5. Repeat Steps 3 and 4 to program additional Auto Dial buttons, or exit programming mode.

Using

From a system phone, to dial an outside number or extension number (you can lift the handset or press Spkr, but you do not have to do so):

1. If you want to call on a specific line, press the line button (or press Intercom 8 and dial the two-digit line number).
   If you did not lift the handset, the lights next to Spkr and Mic/HFAI go on, and you are active on the speakerphone.

   If you want to call using a specific pool on a pooled extension, press the pool button (or press Intercom and dial the three-digit pool access code).
   If you did not lift the handset, the lights next to and Mic/HFAI go on, and you are active on the speakerphone.

2. Press the Auto Dial button on which the outside number or extension number is programmed.
   The system automatically selects a line if you did not specify one, turns on the speaker (if you did not lift the handset), and dials the Auto Dial number. The number being dialed will show on a display phone.

To use an Auto Dial button programmed with a feature code or account code, follow the directions for the feature you want to use.

Automatic Extension Privacy (#304)

Description

This System Programming procedure lets you prevent a user from joining an active call at an extension. When Automatic Extension Privacy is Assigned for an extension, other users *cannot* join active calls at that extension. This feature is typically used for standard phones and extensions connected to fax machines, modems, and credit card scanners, which make and receive data calls that should not be interrupted. This feature can provide the **Privacy** function for standard phones.

Related Features

- Users cannot join calls in progress on pool buttons regardless of the setting for this procedure or the state of the Privacy button. See to add a party to a call in progress on a pool button.
- To manually change an extension's Privacy state, system phone users can program the **Privacy** feature on a button with lights. Users can then press the Privacy button to activate the feature (green light on) or deactivate the feature (green light off) when they want someone to join a call at their extension. (If Automatic Extension Privacy is Assigned at an extension, the green light is lit *automatically* after programming the Privacy button to indicate that Privacy is currently active. If this is the case, and the Privacy button is pressed, the feature is deactivated. To activate Privacy again, you must press the button.)
- This feature applies only to active calls. Any user can retrieve a held call unless **Exclusive Hold** is used.

Considerations

- If you want to be able to intercept calls routed to an auxiliary device—such as an answering machine, a voice messaging system, or an auto attendant—make sure Automatic Extension Privacy is Not Assigned for the auxiliary equipment extension.
- Standard phones and system phones without a programmed Privacy button cannot override this feature once it is assigned to an extension.

Valid Entries

1 = Assigned
2 = Not Assigned✔

Programming

(See Figure 2-3 on page 2-23 for the location of special programming buttons such as System Program and Enter on system phones.)

To change the Automatic Extension Privacy setting for an extension:

1. Press Feature 0 0 System Program System Program # 3 0 4 at extension 10 or 11.
2. Enter the number of the extension to be programmed. For example, to program extension 16, press 1 6.
3. To assign or unassign Automatic Extension Privacy, press Next Data until the appropriate value displays.
4. To program another extension, press Next Item or Prev Item until the extension number shows on the display. Then repeat Step 3.
5. Select another procedure or exit programming mode.

Automatic Line Selection

Description

This Telephone Programming procedure determines the line or pool a user is connected to after lifting the handset or turning on the speaker to make a call. The system looks for lines or pools in the order specified by this procedure and selects the first available line or pool. For example, if you specify outside lines or pools first for an extension, but all outside lines or pools are busy, the user will hear the intercom dial tone after lifting the handset or turning on the speaker.

Related Features

- To copy the Automatic Line Selection setting (as well as other system settings) to other extensions, you can use **Copy Settings (#399)**.
- If **Forced Account Code Entry (#307)** is assigned to an extension, Automatic Line Selection for that extension does not apply. This means the user must *manually* select a line or pool after entering a required account code.
- For an extension identified as an **Hotline (#603)** or **Doorphone Extension (#604/#605)**, program the extension to select only the intercom, with no outside lines in the selection sequence.
- For an extension identified as an **External Hotline (#311)**, program the extension to select outside lines or pools first.

Considerations

- This feature must be programmed from extension 10 or 11 only, using Centralized Telephone Programming. Individual users cannot program this feature directly.
- You should program Automatic Line Selection when you first enter Centralized Telephone Programming, before programming any other features. However, if you want to program both Automatic Line Selection and **Extension Name Display** (which also must be programmed when you first enter Centralized Telephone Programming), first program Automatic Line Selection, then exit and re-enter Centralized Telephone Programming to program **Extension Name Display**.
- For standard touch-tone or rotary phones, or for any phone used mainly to call other extensions, program the extension to select intercom first.
- For combination extensions, the automatic line selection for both devices (including a standard device) follows the automatic line selection for the extension.
- You do not need to include all available lines or pools for an extension, only the ones you want the system to search through and connect automatically.

Valid Entries

Key Extension: Outside system lines, Left Intercom✔

Pooled Extension: Pool 880 button 1, button 2, Left Intercom, Right Intercom✔
Pools 881-883, individual lines

Examples: System Phone

At key extensions, with Automatic Line Selection at its factory setting, the system first searches to find an idle outside line in numerical order (starting with the lowest line number). Then, if all outside lines are busy, the system searches for an idle intercom line. This order can be changed, however, to accommodate your business needs. For example, a telemarketing firm with a WATS line (line 5) to reduce telephone expenses would set Automatic Line Selection for all telemarketers' extensions to "05, 01, 02, 03, 04, Intercom." This way the WATS line would be selected first.

At pooled extensions, with Automatic Line Selection at its factory setting, the system first searches to find an available line in the main pool (pool 880 button 1, then button 2). If all outside lines in the pool are busy, the system selects an idle intercom line. However, you can change the order to accommodate a different automatic line selection. For example, your boss prefers her individual line (line 15) to be selected when she lifts the handset then auxiliary pool 881, which is used for making international calls. To do this, set Automatic Line Selection to "15, 881, Intercom."

Examples: Standard Phone

If a standard phone user intends to place intercom calls and access system features, Automatic Line Selection for his or her extension should be set to intercom first for proper operation. For example, the setting for a standard phone in a lobby, used for internal calling or making local calls on line 1, would be "Intercom, 1."

Programming

(See Figure 2-3 on page 2-23 for the location of special programming buttons such as System Program and Enter on system phones.)

To program Automatic Line Selection for an extension:

1. Press Feature 0 0 System Program System Program Central Tel Program at extension 10 or 11.
2. Enter the number of the extension to be programmed for Automatic Line Selection.
3. Press * *.

4. Press the line, pool, or (Intercom) buttons in the desired order. For each button pressed, a display similar to the following appears:

```
Automatic Line Selection
```

5. To exit Automatic Line Selection, press (*) (*).
6. Press (Central Tel Program) and enter a new extension number or exit programming mode.

Automatic System Answer Button (#111)—Release 2.0 or Later

This feature is available only on the system phone at extension 10.

This System Programming procedure identifies a button to be used to turn Automatic System Answer (ASA) on and off. This feature helps the receptionist answer calls during busy periods.

When an outside call rings on a line programmed with Automatic System Answer, the system answers it after a specified number of rings and plays a short user-recorded greeting to the caller. Then, depending on how **Automatic System Answer Mode (#121)** is programmed, the system does one of the following:

- Places the call on hold at extension 10 (the light next to the line button winks green at extension 10 and winks red at all other extensions that have the line); the outside caller hears music on hold, if it is available.
- Continues to ring all extensions that have access to the line (the green light next to the line button at those extensions flash); the outside caller hears music on hold, if it is available.
- Disconnects the call.

Related Features

- Automatic System Answer affects incoming calls only on lines identified using **Automatic System Answer Lines (#204)**.
- Calls that ring on lines programmed with Automatic System Answer are picked up after two rings, as a default. To change the number of rings, use **Automatic System Answer Delay (#110).**
- You must use **Automatic System Answer Record/Playback** to record the greeting callers hear when the system answers an incoming call.
- For callers to hear music on hold, **Music On Hold (#602)** must be Active and an audio source must be connected to the primary processor module.
- You can set **SMDR Talk Time (#611)** to Active to include the Talk field on call reports. For an incoming outside call answered by Automatic System Answer, this field shows the call duration minus the time the greeting played and the caller waited for someone to answer the call.
- The Automatic System Answer button returns to the status (on/off) it was in before a power failure occurred or **System Reset (#728)** was used.
- Automatic System Answer Mode should not be set to Hold or Ring if the disconnect signal from the local telephone company is not recognized by **Hold Disconnect Time (#203).**
- When the **Caller ID Log Answered Call (#317)** feature is active, Caller ID calls answered by Automatic System Answer in Disconnect Mode are not logged as answered (or unanswered) at any extension.

- Calls answered by Automatic System Answer in Hold Mode are *not* logged by the **Caller ID Logging and Dialing** feature at extension 10 unless extension 10 is programmed to log answered calls using **Caller ID Log Answered Calls (#317).**
- **Direct Extension Dial** is an alternative system answering feature that lets outside callers dial an extension or Hunt Group number directly, without the aid of the receptionist.

Considerations

- The Automatic System/Direct Extension Dial PC card is purchased separately and must be installed (see "*PARTNER ACS PC Card Installation Instructions*").
- Use the Automatic System Answer Record/Playback feature to record a message before using Automatic System Answer since there is no default message.
- An Automatic System Answer button must be programmed on a button with lights on the system display phone at extension 10. (This feature will not work if it is programmed on a button *without* lights.)
- Automatic System Answer can handle up to three outside calls simultaneously.

Valid Entries

1 = Assigned
2 = Not Assigned✔
3 =Select button (then press a programmable button to assign Automatic System Answer to that button)

(See Figure 2-3 on page 2-23 for the location of special programming buttons such as [System Program] and [Enter] on system phones.)

To assign or unassign an Automatic System Answer button with lights at extension 10:

1. Press [Feature] [0] [0] [System Program] [System Program] [#] [1] [1] [1].
2. If you want to assign Automatic System Answer to the first available button, press until a display similar to the following appears:

```
ASA Button
1 Assigned - Ext10
```

If you want to unassign Automatic System Answer, press [Next Data] until a display similar to the following appears:

```
ASA Button
2 Not Assigned
```

If you want to assign Automatic System Answer to a specific button, press ③. A display similar to the following appears:

```
ASA Button
3 Select a Button
```

Then press a programmable button with lights to assign Automatic System Answer to that button.

3. Select another procedure or exit programming mode.
4. Label the Automatic System Answer button at extension 10.

Using

To turn Automatic System Answer on:

Press the Automatic System Answer button at extension 10.
The green light is on steady and Automatic System Answer is on. If calls are ringing when Automatic System Answer is turned on, the calls will be answered immediately by the system.

To turn Automatic System Answer off:

Press the Automatic System Answer button at extension 10.
The green light goes off and Automatic System Answer is off. Any calls in the process of being answered by the system will continue to hear the recorded message and will be placed on hold.

Automatic System Answer Delay (#110)—Release 2.0 or Later

Description

This System Programming procedure specifies the number of times (0–9) an incoming call should ring before it is answered by the Automatic System Answer feature.

Related Features

- After a call is answered, Automatic System Answer plays a greeting then either places the call on hold, provides continuous ringing, or disconnects the call depending on the setting of **Automatic System Answer Mode (#121)**.
- Automatic System Answer affects incoming calls only on lines identified using **Automatic System Answer Lines (#204)**.
- You must program a button on the system display phone at extension 10 to turn Automatic System Answer on and off. Use **Automatic System Answer Button (#111)** to program the button.
- You must use **Automatic System Answer Record/Playback** to record the greeting callers hear when the system answers an incoming call.
- You can set **SMDR Talk Time (#611)** to Active to include the Talk field on call reports. For an incoming outside call answered by Automatic System Answer, this field shows the call duration minus the time the greeting played and the caller waited for someone to answer the call.
- If you use **Caller ID**, make sure Automatic System Answer Delay is set to 2 rings or more to ensure that Caller ID information is captured.

Considerations

- The Automatic System/Direct Extension Dial PC card is purchased separately and must be installed (see "*PARTNER ACS PC Card Installation Instructions*").
- Use the Automatic System Answer Record/Playback feature to record a message before using Automatic System Answer since there is no default message.
- This feature works independently of Line Ringing, which determines how an outside call rings at the extension—immediately, after a 20 second delay, or not at all. Automatic System Answer Delay specifies the number of rings a caller hears before the system answers the call.

Valid Entries

0–9 (0 rings = answered immediately)
2✔

Programming

(See Figure 2-3 on page 2-23 for the location of special programming buttons such as (System Program) and on system phones.)

To change the number of times an incoming call rings at extension 10 before the system answers it:

1. Press (Feature) (0) (0) (System Program) (System Program) (#) (1) (1) (0).
2. To change the number of rings, press (Next Data) until the appropriate value displays—see “Valid Entries” above.
3. Select another procedure or exit programming mode.

Automatic System Answer Lines (#204)—Release 2.0 or later

Description

This System Programming procedure identifies the lines on which incoming calls should be answered by the Automatic System Answer feature.

Related Features

- After a call is answered, Automatic System Answer plays a greeting and then either places the call on hold, provides continuous ringing, or disconnects the call depending on the setting of **Automatic System Answer Mode (#121)**.
- You must program a button on the system display phone at extension 10 to turn this feature on and off. Use **Automatic System Answer Button (#111)** to program the button.
- Calls that ring on lines programmed with Automatic System Answer are picked up after two rings, as a default. To change this number, use **Automatic System Answer Delay (#110)**.
- You must use **Automatic System Answer Record/Playback** to record the greeting callers hear when the system answers an incoming call. If there is no message recorded for Automatic System Answer, the caller will be placed on hold immediately after the system answers.
- You can set **SMDR Talk Time (#611)** to Active to include the Talk field on call reports. For an incoming outside call answered by Automatic System Answer, this field shows the call duration minus the time the greeting played and the caller waited for someone to answer the call.
- For callers to hear music on hold, **Music On Hold (#602)** must be Active and an audio source must be connected to the primary processor module.
- You can set **Caller ID Log Answered Calls (#317)** to Active to log calls on lines answered by Automatic System Answer.

Considerations

- The Automatic System/Direct Extension Dial PC card is purchased separately and must be installed (see "*PARTNER ACS PC Card Installation Instructions").*
- Use the **Automatic System Answer Record/Playback** feature to record a message before using Automatic System Answer since there is no default message.
- All lines programmed with Automatic System Answer should be assigned to extension 10.

- Only outside calls on Automatic System Answer lines are answered automatically. Intercom, transferred, and transfer-return calls are not answered automatically.

Valid Entries

1 = Assigned
2 = Not Assigned ✔

Programming

(See Figure 2-3 on page 2-23 for the location of special programming buttons such as (System Program) and (Enter) on system phones.)

To identify the lines on which outside calls should be answered by the system:

1. Press (Feature) (0) (0) (System Program) (System Program) (#) (2) (0) (4).
2. Enter the two-digit system line number of the desired line. For example, to specify line 1, press (0) (1).
3. To assign or unassign the line, press until the appropriate value displays.
4. To identify another line, press or until the line number shows on the display. Then repeat Step 3.
5. Repeat Steps 3 and 4 for all the lines that you want to identify.
6. Select another procedure or exit programming mode.

Automatic System Answer Mode (#121)—Release 2.0 or Later

Description

This System Programming procedure determines how the system handles Automatic System Answer calls after the greeting plays. There are three available modes:

- ***Hold****:* places the call on hold at extension 10 (the light next to the line button winks green at extension 10 and winks red at all other extensions that have the line); the outside caller hears music on hold, if it is available.
- ***Ring:*** continues to ring and the green light next to the line button continues to flash at all extensions that have access to the line; the outside caller hears music on hold, if it is available.
- ***Disconnect:*** ends the call immediately after the Automatic System Answer greeting plays.

Related Features

- Automatic System Answer affects incoming calls only on lines identified using **Automatic System Answer Lines (#204)**.
- You must program a button on the system display phone at extension 10 to turn Automatic System Answer on and off. Use **Automatic System Answer Button (#111) to program the button.**
- Calls that ring on lines programmed with Automatic System Answer are picked up after two rings, as a default. To change the number of rings, use **Automatic System Answer Delay (#110).**
- You must use **Automatic System Answer Record/Playback** to record the greeting callers hear when the system answers an incoming call.
- You can set **SMDR Talk Time (#611)** to Active to include the Talk field on call reports. For an incoming outside call answered by Automatic System Answer, this field shows the call duration minus the time the greeting played and the caller waited for someone to answer the call.
- For callers to hear music on hold, **Music On Hold (#602)** must be Active and an audio source must be connected to the primary processor module.
- Automatic System Answer Mode should not be set to Hold or Ring if the disconnect signal from the local telephone company is not recognized by **Hold Disconnect Time (#203)**.

Considerations

- The Automatic System/Direct Extension Dial PC card is purchased separately and must be installed (see "*PARTNER ACS PC Card Installation Instructions*").

- Use the Automatic System Answer Record/Playback feature to record a message before using Automatic System Answer since there is no default message.
- If Automatic System Answer Mode is set to Hold, calls are placed on hold at extension 10; however, any extension with access to the line on which the call is held can retrieve the call.
- If Automatic System Answer Mode is set to Hold and a call is placed on hold for longer than one minute, the system generates a short Hold Reminder Tone at extension 10. This tone sounds once every minute until the held call is retrieved, or until the caller hangs up.
- If Automatic System Answer Mode is set to Hold or Disconnect, you can intercept a call while the message is playing—the light for the call will be steady red. To intercept the call, press the line button and lift the handset. The message stops playing when the call is retrieved.
- If Automatic System Answer Mode is set to Ring, the line button on which an outside call rings shows green flash continuously, even while the system answers the call and plays the Automatic System Answer greeting. To answer the call, lift the handset. If the message was playing, it stops automatically.

Valid Entries

1 = Hold ✔
2 = Disconnect
3 = Ring

Programming

(See Figure 2-3 on page 2-23 for the location of special programming buttons such as (System Program) and (Enter) on system phones.)

To change the Automatic System Answer Mode:

1. Press (Feature) (0) (0) (System Program) (System Program) (#) (1) (2) (1).
2. To change the mode, press (Next Data) until the appropriate value displays—see “Valid Entries.”
3. Select another procedure or exit programming mode.

Automatic System Answer Record/Playback (I891) —Release 2.0 or Later

Description

This feature lets you record and play back the message that callers hear when a call is answered by the Automatic System Answer feature. The maximum length of the message is 20 seconds.

Related Features

- After the Automatic System Answer greeting plays, the system either places the call on hold, provides continuous ringing, or disconnects the call depending on the setting of **Automatic System Answer Mode (#121).**
- Automatic System Answer affects incoming calls only on lines identified using **Automatic System Answer Lines (#204)**.
- You must program a button on the system display phone at extension 10 to turn Automatic System Answer on and off. Use **Automatic System Answer Button (#111) to program the button.**
- Calls that ring on lines programmed with Automatic System Answer are picked up after two rings, as a default. To change the number of rings, use **Automatic System Answer Delay (#110).**
- You can set **SMDR Talk Time (#611)** to Active to include the Talk field on call reports. For an incoming outside call answered by Automatic System Answer, this field shows the call duration minus the time the greeting played and the caller waited for someone to answer the call.
- For callers to hear music on hold, **Music On Hold (#602)** must be Active and an audio source must be connected to the primary processor module.

Considerations

- The Automatic System/Direct Extension Dial PC card is purchased separately and must be installed. If the PC Card has not been installed, see “PARTNER ACS PC Card Installation Instructions.”
- Use the Automatic System Answer Record/Playback feature to record a message before using Automatic System Answer since there is no default message.
- You should record a message before using Automatic System Answer since there is no default message.
- If you do not record a message for Automatic System Answer, calls will be placed on hold, continue to ring, or be disconnected immediately after the system answers, depending on the setting of **Automatic System Answer Mode (#121)**.

- You must record the Automatic System Answer message from the system display phone at extension 10 or 11.
- You cannot record or play a message while **Automatic System Answer** or **Direct Extension Dial** is answering a call. When you want to record or play a message, turn off Automatic System Answer and Direct Extension Dial and wait for any calls in the process of being answered by the system to be completed.

Programming

(See Figure 2-3 on page 2-23 for the location of special programming buttons such as (System Program) and (Enter) on system phones.)

To record an Automatic System Answer message:

1. The Automatic System/Direct Extension Dial PC card is purchased separately and must be installed (see "*PARTNER ACS PC Card Installation Instructions*").
2. Turn off **Automatic System Answer** and **Direct Extension Dial** and wait for any calls in the process of being answered by these features to be completed.
3. Lift the handset of the system display phone at extension 10 or 11.
4. Press.
5. Dial (8) (9) (1). The current time of day remains on the second line of the display for the duration of this procedure. The top line of the display reads:

   `ASA: 1=Record`

   If a message was recorded previously, a display similar to the following appears:

   `ASA: 1=Record 2=Play`

6. Press 1. A display similar to the following appears for three seconds:

   `Record at the tone`

   After three seconds, you hear a confirmation tone and you can begin recording your message. While you are recording, a display similar to the following appears:

   `Press # to stop`

7. Press (#) when you are done recording.

   If the allotted time (20 seconds) for the message is completed before you press (#), you hear a tone to let you know that the system has stopped recording.

   When you finish recording, a display similar to the following appears:

   `ASA: 1=Record 2=Play`

8. At this point:
   - To re-record the message, follow the instructions from Step 5 in this current procedure.
   - To play back the message, follow the instructions from Step 5 in the following procedure.
   - To exit from the procedure, hang up the handset.

To play back an Automatic System Answer message:

1. Turn off **Automatic System Answer** and **Direct Extension Dial** and wait for any calls in the process of being answered by these features to be completed.
2. Lift the handset of the system display phone at extension 10 or 11.
3. Press the (Intercom) button.
4. Dial (8) (9) (1). A display similar to the following appears:

```
ASA: 1=Record 2=Play
```

5. Press (2). A display similar to the following appears:

```
Message Playback
```

   After the message is played back, you hear a confirmation tone and a display similar to the following appears:

```
ASA: 1=Record 2=Play
```

6. At this point:
   - To re-record the message, follow the instructions from Step 5 in the procedure for recording a message.
   - To play back the message, follow the instructions from Step 5 directly in this current procedure.
   - To exit from the procedure, hang up the handset.

Automatic VMS Cover (#310)

Description

This feature applies only if you have a voice messaging system.

This System Programming procedure automatically routes an extension's unanswered intercom and transferred calls to the Call Answer Service of the voice messaging system after a specified number of rings (default for all system extensions is three rings), so callers can leave a message.

Related Features

- To manually change an extension's VMS Cover state, users can program the **VMS Cover** feature on a button with lights. Users can then press the VMS Cover button to activate the feature (green light on) or deactivate the feature (green light off). (If Automatic VMS Cover is Assigned at an extension, the green light is lit *automatically* after programming the VMS Cover button to indicate that VMS Cover is currently active. If this is the case, and the VMS Cover button is pressed, the feature is deactivated. To activate VMS Cover again, you must press the button.)
- Automatic VMS Cover also applies to outside calls on lines assigned ownership with **Line Coverage Extension (#208)**.
- Use **VMS Cover Rings (#117)** to change the number of times intercom and transferred calls or outside calls on lines assigned ownership ring at all system extensions before they are sent to the voice messaging system.
- Users with Automatic VMS Cover turned on can activate **Do Not Disturb** to **Send All Calls** immediately to their voice mailbox.
- If an extension has Automatic VMS Cover and **Call Coverage** active, calls ring at the covering extension after the specified number of **Call Coverage Rings (#116)**. If the covering extension does not answer, the call is routed to the voice mailbox of the extension that activated **Call Coverage** after the specified amount of VMS cover rings.
- If an extension has Automatic VMS Cover and **Call Forwarding** active, calls ring at the forwarding destination; they are not covered by the voice messaging system.

Considerations

Standard phones and system phones without a programmed VMS Cover button cannot override this feature once it is assigned to an extension.

Valid Entries

1 = Assigned
2 = Not Assigned ✔

Programming

(See Figure 2-3 on page 2-23 for the location of special programming buttons such as System Program and Enter on system phones.)

To change the Automatic VMS Cover setting for an extension:

1. Press Feature 0 0 System Program System Program # 3 1 0 at extension 10 or 11.
2. Enter the number of the extension to be covered by the voice messaging system. For example, to program extension 11, press 1 1.
3. To assign or unassign Automatic VMS Cover, press Next Data until the appropriate value displays.
4. To program another extension, press Next Item or Prev Item until the extension number shows on the display. Then repeat Step 3.
5. Select another procedure or exit programming mode.

Background Music (F19)

Description

This feature is available only on system phones with speakers.

This feature provides background music through the speaker of an idle system phone for a user's work area. Background Music plays the recorded material from the Music On Hold audio source.

Related Features

Background Music is available only if **Music On Hold (#602)** is active and an audio source is connected to the processor module.

Considerations

- The Background Music feature broadcasts music over telephone lines. The performance of music over telephone lines is a public performance under United States Copyright law. Accordingly, in order for the performance of that music to be lawful, it must be licensed annually to the user by the copyright owners or their representatives (such as ASCAP or BMI).

  The Magic on Hold system includes the required license for the first year. This license must be renewed annually.
- Background Music stops when a user makes or answers a call, but resumes when the phone becomes idle again.
- If a system phone and a standard phone with a message waiting light are connected in a combination extension, the standard phone's message waiting light will not light if Background Music is on at the system phone.
- You can program a Background Music button on a system phone to use the feature with one touch. A button with lights is recommended.

Programming

(See Figure 2-3 on page 2-23 for the location of special programming buttons such as System Program and Enter on system phones.)

To program a Background Music button:

1. Press Feature 0 0 System Program System Program Central Tel Program Altavoz Transfer extension 10 or 11.
2. Enter the number of the extension to be programmed with this feature.
3. Press a programmable button, preferably a button with lights.
4. Press Feature 1 9.

5. Program another button for this extension or exit programming mode.

Using

To turn Background Music on:

1. From a system phone with a speaker, press the programmed button or press Feature 1 9.
   If the phone is idle, you hear Background Music. If the Background Music button has lights, the green light turns on.
2. To adjust the volume of Background Music, use the phone's volume control buttons while listening to the Background Music.

To turn Background Music off:

Press the programmed button or press Feature 1 9 again.
If the Background Music button has lights, the green light turns off.

Backup Programming—Automatic (#123)

Description

The backup of system and telephone programming is optional, but recommended. This System Programming procedure determines whether the automatic backup of all programming (except the system date, day, and time) occurs or not. The default setting is Not Active. When Backup Programming—Automatic is set to Active, the information is backed up at 2:00 a.m. on the first day of each month (determined by the system date and time settings) to a Backup/Restore PC Card.

If Backup Programming—Automatic is Active and an automatic backup fails, a Backup-Failure Alarm message appears (instead of the system date and time) on the top line of the telephone display at idle extensions 10 and 11. The message will be one of the following:

```
Backup Failed:Write Prot
Backup Failed:Check Card
Backup Failed:SystemBusy
Backup Failed:InsertCard
```

See Chapter 6, "Troubleshooting" for an explanation of these messages and suggested corrective actions, and for the procedure for clearing the Backup-Failure Alarm message.

Related Features

- Verify that the **System Date (#101)**, **System Day (#102)**, and **System Time (#103)** are set correctly, so that the automatic backup occurs at the correct time. These settings are not backed up.
- You can use **Backup Programming—Manual (#124)** in place of or to supplement the automatic backups, if desired.
- Once the system and telephone programming settings have been backed up to a PC Card, you can use the **Restore Programming (#125)** procedure to restore the settings if they become corrupted. You can also use **Restore Programming (#125)** to verify the date on a backup file.

Considerations

- To perform either automatic or manual backups, purchase a Backup/Restore PC Card from Lucent Technologies. If the PC Card has not been installed, see the "*PARTNER ACS PC Card Installation Instructions*."

- Whenever the setting for Backup Programming—Automatic is changed from Not Active to Active, a backup will occur at the next occurrence of 2:00 a.m. After that, backups will be done at 2:00 a.m. on the first day of each month until the setting is changed back to Not Active.

  NOTE:
  Although you can change the setting for Backup Programming—Automatic (#123) without having a Backup/Restore in the PC Card slot, you must have a PC Card in the slot before a backup can take place. It is recommended that you leave the Backup/Restore PC Card in PC Card Slot 2.

- Slot 2 is recommended for the Backup/Restore PC Card; however, either slot can be used. If the system detects Backup/Restore PC Cards in *both* slots when a backup begins, *the first slot is used and the second is ignored*.
- The same Backup/Restore PC Card can be used for both automatic and manual backups, since the data is recorded in two separate files. An automatic backup replaces the AUTO.*mmddyy* file only (where *mmddyy* represents the date of the backup in month, day, year format), and a manual backup replaces the MAN.*mmddyy* file only. **Restore Programming (#125)** asks you to specify which backup file you want to use.
- Calls will continue to be handled normally during an automatic backup.

Valid Entries

1 = Active
2 = Not Active ✔
3 = Backup Alarm Cleared

Programming

(See Figure 2-3 on page 2-23 for the location of special programming buttons such as (System Program) and (Enter) on system phones.)

Changing the Setting

To change the setting for Backup Programming—Automatic:

1. Press (Feature) (0) (0) (System Program) (System Program) (#) (1) (2) (3) at extension 10 or 11.
   The current setting is displayed.
2. Press (Next Data) or (Prev Data) to change the setting, or press (Remove) to return the setting to the default.
3. Exit programming mode.

If you chose Option 1, Active:
The system will be backed up to the PC Card at 2:00 a.m., and thereafter at 2:00 a.m. on the first day of each month, provided that a valid Backup/Restore PC Card is in the PC Card slot. (See "PARTNER ACS PC Card Installation Instructions.")

The old AUTO.*mmddyy file on the PC Card is replaced by the new one. (The* MAN.*mmddyy file is unaffected.) You can use the* **Restore Programming (#125)** *feature to check the date on the* AUTO.*mmddyy file to verify that the backup was successful.*

If you chose Option 2, Not Active, no automatic backups will be performed.

For information about using Option 3, "Backup Alarm Cleared,"Clearing a Backup-Failure Alarm" on page 6-7.

Using

Use Option 3 to clear Backup-Failure Alarms. See"Clearing a Backup-Failure Alarm" on page 6-7.

Backup Programming—Manual (#124)

Description

The backup of system and telephone programming is optional, but recommended, especially if you are changing the processor module or upgrading the system, or before and after any major programming changes. This System Programming procedure manually backs up all the programming (except the system date, day, and time) to a Backup/Restore PC Card.

Related Features

- Verify that the **System Date (#101)**, **System Day (#102)**, and **System Time (#103)** are set correctly. These settings are not backed up.
- You can use **Backup Programming—Automatic (#123)** if you prefer. If so, backups are done automatically at 2:00 a.m. on the first day of each month. You can also use both methods, performing manual backups between the scheduled monthly backups.
- Once the system and telephone programming settings have been backed up to a PC Card, you can use the **Restore Programming (#125)** procedure to restore the settings if they become corrupted. You can also use **Restore Programming (#125)** to verify the date on a backup file.

Considerations

- To perform either manual or automatic backups, purchase a Backup/Restore PC Card from Lucent Technologies. If the PC Card has not been installed, see the "*PARTNER ACS PC Card Installation Instructions*."
- You *must* have a Backup/Restore PC Card in the PC Card slot before a backup can take place. It is recommended that you leave the Backup/Restore PC Card in PC Card Slot 2.
- Slot 2 is recommended for the Backup/Restore PC Card; however, either slot can be used. If the system detects Backup/Restore PC Cards in *both* slots when a backup begins, *the first slot is used and the second is ignored*.
- The same Backup/Restore PC Card can be used for both automatic and manual backups, since the data is recorded in two separate files. An automatic backup replaces the AUTO.*mmddyy* file only (where *mmddyy* represents the date of the backup in month, day, year format), and a manual backup replaces the MAN.*mmddyy* file only. **Restore Programming (#125)** asks you to specify which backup file you want to use.
- Calls will continue to be handled normally during a manual backup.

Programming

(See Figure 2-3 on page 2-23 for the location of special programming buttons such as (System Program) and (Enter) on system phones.)

To begin a manual backup of system settings:

1. Verify that only one Backup/Restore Card is in the processor module.
2. Press (Feature) (0) (0) (System Program) (System Program) (#) (1) (2) (4) at extension 10 or 11.
   If there is a problem, one of the following messages is displayed:

```
Card is Write Protected
Insert Valid Card
System Busy
```

   See Chapter 6, "Troubleshooting", for explanations and corrective actions.

   Otherwise, the display instructs you to press Enter to begin the backup.

3. Press (Enter).

   A status message is displayed indicating that a backup is in progress, and within 30 seconds, a message displays indicating the result.

   If the backup was successful, the new backup information replaces the information in the old MAN.mmddyy file on the Backup/Restore PC Card and the.mmddyy extension now reflects the current date. Backup information created during a manual backup does not overwrite any AUTO.mmddyy file. Go on to Step 4.

   If the backup failed, you see one of the following error messages in the display:

```
Backup Failed:Check Card
Backup Failed:SystemBusy
```

   Go to Step 4 and then see Chapter 6, "Troubleshooting", for explanations and corrective actions.

4. Exit programming mode.

NOTE:
If you exit the procedure before the backup finishes, you will not interrupt the backup, but you will not see feedback messages on the display.

Call Coverage (F20,XX,XX) —Release 2.0 or Later

Description

This feature redirects all intercom, transferred, and outside calls on lines assigned ownership from a user's extension to another system extension (where XX is a system extension number) for coverage. When Call Coverage is activated, covered calls are routed to the covering extension after a specified number of rings. Callers can then leave a message with the person at the covering extension. This feature is helpful for users who want their callers to have personalized service when they are unable to answer calls.

Related Features

- You must use **Line Coverage Extension (#208)** to designate an extension as the owner of a specific outside line, so the extension can activate Call Coverage for that line. An extension's owned line is eligible for coverage only if **Line Ringing** is set to Immediate Ring or Delayed Ring and **Line Access Restriction (#302)** or **Pool Access Restriction (#315)** is set to No Restriction or In Only.
- You can use **Call Coverage Rings (#116)** to specify the number of times a covered call rings at an extension before it is sent to the covering extension.
- If Call Coverage and **Do Not Disturb** are active, covered calls are routed immediately to the covering extension, without ringing the extension first.
- You can turn on Call Coverage while a call is ringing, to send a call immediately for coverage. Similarly, if Call Coverage is on and a call begins to ring, you can turn on **Do Not Disturb** to send that call immediately for coverage. (See **Send All Calls**.)
- If an extension has Call Coverage and **VMS Cover** active, covered calls ring at the covering extension for the specified number of Call Coverage Rings. Then:
  - — If the covering extension does not answer, the call is routed to the voice mailbox of the extension that activated Call Coverage after the specified number of **VMS Cover Rings (#117)**.
  - — If the covering extension has **Do Not Disturb** active, the call is routed immediately to the voice mailbox of the extension that activated Call Coverage.
- If an extension has Call Coverage active without voice mail coverage, covered calls ring at the covering extension for the specified number of Call Coverage Rings. Outside and intercom calls continue to ring at the covering extension until the call is answered or the caller hangs up. For transferred calls:

— If the covering extension does not answer, the call goes to the transfer return extension after the specified number of **Transfer Return Rings (#105)**.

— If the covering extension has **Do Not Disturb** active, the call rings one more time at the user's extension before it goes to the transfer return extension.

- If an extension has Call Coverage and **Call Forwarding** active, calls are routed to the Call Forwarding destination extension (Call Forwarding takes precedence).
- If a user at a covering extension has a system display phone and is busy on a call, he or she can use **Caller ID Inspect** to view the number of the extension from which a coverage call is being sent. If a user is not active on a call and multiple coverage calls are ringing, he or she can press the line, pool, or (Intercom) buttons to view the number of the extension from which each coverage call is being sent; however, if the user picks up the handset, he or she will join or answer the call that was previously ringing at the originating extension shown on the display.
- Call Coverage does not apply to parked calls. See **Call Park**.
- If you want calls answered by Call Coverage to be logged as unanswered calls, use the **Call Log Line Associations (#318**) feature to associate the lines with extensions for logging unanswered calls.

Considerations

- A system display phone is recommended for the covering extension so the user can identify coverage calls. "Coverage Call for XX" appears on the display when a coverage call rings at a covering extension rather than Caller ID information, if available.
- If the covering extension has an **Auto Dial** button for the originating extension, the light shows green flutter while the coverage call is ringing at the covering extension. If the user at the extension lifts the handset, he or she will be connected to this call.
- Intercom, transferred, and outside calls on lines assigned ownership can be covered. Group calls, forwarded calls, transfer-return calls, voice-signaled calls, Voice Interrupt on Busy calls, Wake-Up Service calls, and calls to doorphone alert extensions cannot be covered.
- Do not designate any of the extensions in Hunt Group 7, which contains the extensions associated with the voice messaging system, as a covering extension.
- A single extension can cover multiple extensions; however, an extension programmed for Call Coverage can have only one covering extension. Only one Call Coverage button can be programmed per extension.
- The user at an extension who has activated Call Coverage can intercept an outside call routed for coverage by pressing the outside line button.

- You can program Call Coverage on a button on a system phone. Use a button with lights if you want a visual indication when your calls are being covered. When the green light is on, your calls are being covered; when the green light is off, Call Coverage is not active.
- If the Call Coverage feature code and optional originating and covering extensions are programmed on a button with lights, you can use the button to turn Call Coverage on and off with one touch. (The lights show when Call Coverage is on, even if calls are covered by a different extension than the one stored on the button, and you can still use the button to turn Call Coverage off.)

Programming

(See Figure 2-3 on page 2-23 for the location of special programming buttons such as System Program and Enter on system phones.)

To program a Call Coverage button:

1. Press Feature 0 0 System Program System Program Central Tel Program.
2. Enter the number of the extension to be programmed with this feature.
3. Press a programmable button, preferably a button with lights.
4. At this point, you can do one of the following:
   - Press Feature 2 0.
   - Press Feature 2 0 and the number of the originating extension.
   - Press Feature 2 0 the number of the originating extension, and the number of the covering extension.
5. Program another button for this extension or exit programming mode.

Using

System Phone

To send calls for coverage manually:

1. Press Feature 2 0.
2. Dial your extension number.
3. Dial the extension number of the covering extension.

To remove Call Coverage manually:

1. Press Feature 2 0.
2. Dial your extension number twice.

To send calls for coverage using the programmed button:

1. Press the programmed button.
   If an originating extension and a covering extension were programmed on the button, Call Coverage is activated (on a button with lights, the green light is on). Skip Steps 2 and 3.
2. If no originating extension was programmed, dial your extension number.
3. If no covering extension was programmed, dial the extension number of the covering extension.

   Call Coverage is activated (on a button with lights, the green light is on).

To remove Call Coverage using the programmed button:

1. Press the programmed button.

   If an originating extension and a covering extension were programmed on the button, Call Coverage is deactivated (on a button with lights, the green light is off). Skip Steps 2 and 3.
2. If no originating extension was programmed, dial your extension number.
3. If no covering extension was programmed, dial your extension number again.
   Call Coverage is deactivated (on a button with lights, the green light is off).

Standard Phone

To send your calls for coverage:

1. Lift the handset.
   You hear intercom dial tone.
2. Press # 2 0.
3. Dial your extension number.
4. Dial the extension number of the covering extension.

To remove Call Coverage:

1. Lift the handset.
   You hear intercom dial tone.
2. Press # 2 0.
3. Dial your extension number twice.

Call Coverage Rings (#116)—Release 2.0 or Later

Description

This System Programming procedure, which applies to all system extensions programmed for Call Coverage, defines the number of times intercom, transferred, and outside calls on lines assigned ownership ring at an extension before they are sent to the covering extension.

Related Features

- Call Coverage redirects an extension's covered calls to the covering extension.
- You must use **Line Coverage Extension (#208)** to designate an extension as the owner of a specific outside line, so the extension can activate Call Coverage for that line.
- If an extension has Call Coverage and **VMS Cover** active, covered calls ring at the covering extension for the specified number of Call Coverage Rings. Then:
  - — If the covering extension does not answer, the call is routed to the voice mailbox of the extension that activated Call Coverage after the specified number of VMS Cover Rings (#117).
  - — If the covering extension has **Do Not Disturb** active, the call is routed immediately to the voice mailbox of the extension that activated Call Coverage.

Valid Entries

1–9
2✔

(See Figure 2-3 on page 2-23 for the location of special programming buttons such as System Program and Enter on system phones.)

To change the number of times a call rings at an extension before it is sent to the covering extension:

1. Press 0 0 System Program System Program # 1 1 6.
2. Enter a different setting (1–9).
3. Select another procedure or exit programming mode.

Call Forwarding/Call Follow-Me (F11,XX,XX)

Description

This feature forwards all intercom, transferred, and outside calls from a user's extension to another system extension (where XX is an extension number). Users can activate this feature from their own extension (*Call Forwarding*) or from any other extension in the system (*Call Follow-Me*).

Related Features

- An extension's outside calls on lines or pools assigned to the extension are eligible for Call Forwarding only if **Line Ringing** is set to Immediate Ring or Delayed Ring and **Line Access Restriction (#302)** or **Pool Access Restriction (#315)** is set to No Restriction or In Only.
- If an extension in a **Hunt Group (#505)** activates Call Forwarding, the system considers the extension unavailable when a call goes to the Hunt Group.
- If an extension has **VMS Cover** and Call Forwarding active, calls ring at the Call Forwarding destination extension; they are not covered by the voice messaging system.
- If an extension has **Call Coverage** and Call Forwarding active, calls are routed to the Call Forwarding destination extension (Call Forwarding takes precedence).
- Calls forwarded and unanswered at both the originating extension and the forwarded extension will be logged as unanswered calls by the **Caller ID Logging** feature at both extensions. If the forwarded call is answered at the forwarded extension, it will not be logged unless the **Caller ID Log Answered Calls (#317)** feature is set to log answered calls.
- Call Forwarding does not apply to parked calls. See **Call Park**.

Considerations

- You can forward outside, intercom, and transferred calls. You cannot forward group calls, calls to doorphone alert extensions, voice-signaled calls, Voice Interrupt on Busy calls, coverage calls or transfer-return calls. Calls *cannot* be forwarded outside the system.
- The phone at the extension from which calls are being forwarded beeps once each time a call is forwarded (unless **Do Not Disturb** is active).
- Do not forward your calls to any of the extensions in Hunt Group 7, which contains the extensions associated with the voice messaging system.

- At an extension that has Call Forwarding activated, if multiple calls are ringing, the system forwards them one at a time. This means that each subsequent call is not forwarded until the previous call is finished.
- If you press the Call Forwarding button after a call starts to ring, that call will not be forwarded.
- You can program Call Forwarding on a button on a system phone. Use a button with lights if you want a visual indication when your calls are forwarded. When the green light is on, your calls are forwarded; when the green light is off, calls ring at your extension.
- If the Call Forwarding feature code and optional originating and destination extensions are programmed on a button with lights, you can use the button to turn Call Forwarding on and off with one touch. (The lights show when Call Forwarding is on, *even if* calls are forwarded to a different extension than the one stored on the button, and you can still use the button to turn Call Forwarding off.)

Programming

(See Figure 2-3 on page 2-23 for the location of special programming buttons such as System Program and Enter on system phones.)

To program a Call Forwarding button:

1. Press Feature 0 0 System Program System Program Central Tel Program at extension 10 or 11.
2. Enter the number of the extension to be programmed with this feature.
3. Press a programmable button, preferably a button with lights.
4. At this point, you can do one of the following:
   - Press Feature 1 1.
   - Press Feature 1 1 and the number of the originating extension.
   - Press Feature 1 1, the number of the originating extension, and the number of the destination extension.
5. Program another button for this extension or exit programming mode.

Using

System Phone

To forward calls manually:

1. Press Feature 1 1.
2. Dial your extension number.
3. Dial the extension number at which you want the calls to ring.

To remove Call Forwarding manually:

1. Press (Feature) (1) (1).
2. Dial your extension number *twice.*

To forward calls using the programmed button:

1. Press the programmed button.
   If an originating extension and a destination extension were programmed on the button, Call Forwarding is activated (on a button with lights, the green light is on). Skip Steps 2 and 3.
2. If no originating extension was programmed, dial your extension number.
3. If no destination extension was programmed, dial the extension number at which you want the calls to ring.
   Call Forwarding is activated (on a button with lights, the green light is on).

To remove Call Forwarding using the programmed button:

1. Press the programmed button.
   If an originating extension and a destination extension were programmed on the button, Call Forwarding is deactivated (on a button with lights, the green light is off). Skip Steps 2 and 3.
2. If no originating extension was programmed, dial your extension number.
3. If no destination extension was programmed, dial your extension number again.
   Call Forwarding is deactivated (on a button with lights, the green light is off).

Standard Phone

To forward your calls:

1. Lift the handset.
   You hear intercom dial tone.
2. Press (#) (1) (1).
3. Dial your extension number.
4. Dial the number of the extension at which you want your calls to ring.

To remove Call Forwarding:

1. Lift the handset.
   You hear intercom dial tone.
2. Press (#) (1) (1).
3. Dial your extension number *twice.*

Call Park

Description

This feature allows you to “park” a call, or put it on a special type of hold, so it can be picked up from any phone in the system.

Related Features

- Use **Call Pickup** to retrieve parked calls.
- When a call is parked, the caller hears **Music On Hold (#602)** if it is active and an audio source is connected to the processor module, regardless of the **Ring on Transfer (#119)** setting.
- If you frequently park calls and you have a system phone, program your extension number on an Auto Dial button, so you can park a call simply by pressing the button. See **Auto Dialing**.
- Other ways of placing a call on hold include **Hold** and **Exclusive Hold**.
- Parked calls do not receive **Call Waiting, Call Coverage, Call Forwarding**, or **VMS Cover**.

Considerations

- Call Park typically is used for pooled extensions in Hybrid mode, because users can retrieve calls without knowing which line the call is on.
- It is recommended that you park only one call at a time from your extension to ensure that you know which caller you are talking to when you pick up the parked call.
- Call Park is useful for standard phone users because they can retrieve a parked call without knowing which line the call is on.

Using

System Phone

(See Figure 2-3 on page 2-23 for the location of special programming buttons such as (*System Program*) and (*Enter*) on system phones.)To park a call:

1. While on a call, press (*Transfr*) and dial your two-digit extension number or press the Auto Dial button programmed for your extension.
2. Hang up.
   If the call is not picked up within three minutes, it rings back at your extension. If you used an Auto Dial button, the green light next to the button flutters.

To retrieve a parked call using **Call Pickup:**

1. Dial (Intercom) (6).
2. Dial the extension number or press an Auto Dial button for the extension where the call is parked.

Standard Phone

To park a call:

1. While on a call, press the switchhook or (Recall).
   The call is put on hold and you hear intercom dial tone.
2. Dial your two-digit extension number.
3. Hang up.
   If the call is not picked up within three minutes, it rings back at your extension. If you are on another call when the parked call returns, you will not receive notification even if Call Waiting is Assigned to your extension. The parked call rings back when your phone is idle.

To retrieve a parked call using **Call Pickup:**

1. Lift the handset.
   You hear intercom dial tone.
2. Dial (6) and the extension number where the call is parked.

Call Pickup (I6XX)

Description

This feature lets users answer any intercom, outside, or transferred call ringing at another specified extension (where XX is a system extension number). This feature is useful for officemates who agree to answer each other's calls.

Related Features

Use this feature to retrieve a parked call—see **Call Park**. Note that if you use Call Pickup to answer a call that is parked at an extension that also has ringing calls, you will be connected to the parked call—parked calls take precedence over ringing calls.

Considerations

You can program a Call Pickup button on a system phone to pick up with one touch a call that is ringing or parked at another specified extension.

Programming

(See Figure 2-3 on page 2-23 for the location of special programming buttons such as (System Program) and (Enter) on system phones.))

To program a Call Pickup button:

1. Press (Feature) (0) (0) (System Program) (System Program) (Central Tel Program) at extension 10 or 11.
2. Enter the number of the extension to be programmed with this feature.
3. Press a programmable button.
4. To specify the extension to be answered, press left (Intercom), followed by (6) and the two-digit system extension number. For example, to answer a call ringing at extension 23, press left (Intercom) (6) (2) (3).
5. Program another button for this extension or exit programming mode.

Using

System Phone

1. If you want, lift the handset.
2. Press the programmed button, or press (Intercom) (6) and the two-digit number of the extension at which the call is ringing or parked.

Standard Phone

1. Lift the handset.
   You hear intercom dial tone.
2. Dial ⑥ plus the two-digit number of the extension at which the call is ringing or parked.

Call Waiting (#316)

Description

This feature applies only to standard phones.

This System Programming procedure specifies standard phone extensions that are eligible for Call Waiting. Users who receive a call waiting tone hear two beeps when they are on a call to indicate a second incoming intercom, transferred, or outside call. The user can press the switchhook (or Recall or Flash button, if available) to put the current call on hold and retrieve the second call. To return to the first call, the user simply presses the switchhook again.

Related Features

- For instructions for using Call Waiting, see **Answering Calls**.
- Call Waiting does not apply to parked calls. See **Call Park**.

Considerations

- This feature is distinct from the local telephone company's Call Waiting feature. If you use this system feature, do not use your local telephone company's Call Waiting feature.
- The Call Waiting tone (two beeps) is *not* repeated.
- Use Call Waiting only for standard phone extensions. Do not assign Call Waiting to extensions that have fax machines, credit card scanners, modems, or auto attendants because the call-waiting tone will interrupt the data connection.
- You cannot transfer either party connected using Call Waiting, conference in additional parties, or use feature codes while both calls are active.
- Transfer-return, group call distribution, hunt group, and wake-up calls are not considered incoming calls for this feature.

Valid Entries

1 = Assigned
2 = Not Assigned ✔

Programming

(See Figure 2-3 on page 2-23 for the location of special programming buttons such as System Program and Enter on system phones.)

To change the Call Waiting setting for an extension:

1. Press Feature 0 0 System Program System Program # 3 1 6 at extension 10 or 11.
2. Enter the number of the extension to receive Call Waiting. For example, to program extension 11, press 1 1.
3. To assign or unassign Call Waiting, press Next Data until the appropriate value displays.
4. To program another extension, press Next Item or Prev Item until the extension number shows on the display. Then repeat Step 3.
5. Select another procedure or exit programming mode.

Caller ID

Description

Caller ID is available on *system display phones* on all lines for which you subscribe to Caller ID service. Caller ID information is the caller's telephone number (or name, if available). When active on a call, a user automatically receives Caller ID information for the duration of the call. When an extension is idle, a user receives Caller ID information for the call the user will be connected to when the handset is lifted. This feature requires no special programming; however, you must subscribe to Caller ID service (if it is available) on a per-line basis from your local telephone company and connect Caller ID lines to the appropriate system modules.

Related Features

- Any users who have access to Caller ID line(s) will receive Caller ID information on their system display phones. You can restrict users from viewing Caller ID information using the following procedures:
  - For *ringing* calls, you can block Caller ID from displaying at specific extensions by restricting access to the Caller ID lines. Use **Line Access Restriction (#302)** to restrict access to lines, **Pooled Access Restriction (#315)** to restrict access to all lines within a specific pool, or both procedures for pooled extensions that have pools and lines.
  - For *active* calls, you can activate **Privacy** at your extension to prevent other users from joining your calls and from accessing the Caller ID information displayed at your extension.
  - For *held* calls, use **Exclusive Hold** rather than **Hold** to prevent other users from picking up your held call and from accessing the Caller ID information associated with the held call.
- There are two ways to inspect Caller ID lines:
  - *If you are active on a call,* you automatically get Caller ID information for that call. However, If you want to view Caller ID information for a second call *without* ending the active call *or* putting it on hold, use **Caller ID Inspect**.
  - *If you are not active on a call,* you can press line buttons to view Caller ID information for those lines; however, keep in mind that if you pick up the handset you will join or answer the call shown on the display.
- In some regions, users will have the option to subscribe to the name service for Caller ID. This service allows the user to have a name and/or number associated with Caller ID information. If you want access to the

name, you can program **Caller ID Name Display** onto a button with lights. This allows users to toggle between the Name and Number for an incoming call.

- Caller ID information does not display for extensions active on **Conference Calls.**
- If users receive a call routed to their extension by **Direct Extension Dial**, a voice messaging system, or automated attendant, the Caller ID information is passed to their extension when they answer the call.
- If users **Transfer** a call, the Caller ID information is passed to the destination extension.
- If users send calls for **Call Coverage**, the Caller ID information is not passed to the covering extension. “Coverage Call for XX” appears instead so the user at the covering extension can identify the person for whom the call was originally intended.
- A user at a covering extension who has a system display phone and who is busy on a call can use **Caller ID Inspect** to view the number of the extension from which a **Call Coverage** call is being sent. If users are not active on a call and multiple coverage calls are ringing, they can press line, pool, and intercom buttons to view the number of the extension from which each coverage call is being sent; however, if they pick up the handset they will join or answer the call indicated on the display.
- Caller ID information is displayed if you **Join** a call; however, you cannot join a call at any extension that has Privacy activated.
- Caller ID information is displayed if users pick up calls with **Direct Line Pickup—Active Line, Call Pickup,** or **Group Pickup,** but the restrictions stated previously apply.
- For incoming calls, Caller ID information displays only when a call is audibly alerting at an extension. This means that extensions with **Do Not Disturb** activated or extensions that have lines with **Line Ringing** set to No Ring do not receive Caller ID information. However, Caller ID information is displayed once the call is answered or if the line is preselected.
- **Caller ID Type (#122)** can be set to either USA or Singapore. For proper operation in the United States, leave the default setting, USA.
- Users can view Caller ID information for unanswered central office calls on predesignated lines and unanswered directed calls using the **Caller ID Call Logging and Dialing (F23)** feature. Users can also program this feature to log *answered* calls using the **Caller ID Log Answered Calls (#317)** programming procedure.

Considerations

- Subscriptions to Caller ID service are on a per-line basis.

- The lines associated with Caller ID must be connected to a line jack on a PARTNER ACS processor module, 206EC module, 308EC module, or 400EC module. For more information, refer to the *PARTNER Advanced Communications System Installation* guide.
- Caller ID information is passed to an extension between the first and second ring. To receive Caller ID information, wait until the second ring before answering the call.
- Individuals with Call Waiting from the local telephone company will not receive Caller ID information for the second call.
- Not all calls on Caller ID lines are displayed. This varies by local phone company. When Caller ID information is not captured, the system date and day (default) displays instead.
- The incoming telephone number replaces the system date and time display on system phones for the duration of the call. An out-of-area message (- - - - - - - - - -) displays if a call is being dialed from a region that does not support Caller ID. A privacy message (`Priv.`) displays if the caller has blocked transmission of Caller ID information.
- If you use SMDR, telephone numbers of incoming calls print on call reports after the call is completed. (Private and out-of-area numbers are reported as “IN” on call reports.)

Caller ID Inspect (F17)

Description

This feature allows a user who is active on a call to view Caller ID information for a second call, without disconnecting the current call or putting it on hold. Users can inspect ringing, active, or held calls.

Related Features

- If you program a **Caller ID Name Display** button, you can toggle between Caller ID name and Caller ID number while inspecting lines.
- Refer to **Caller ID** for details on Caller ID information.
- A user at a covering extension who has a system display phone and who is busy on a call can use **Caller ID Inspect** to view the number of the extension from which a **Call Coverage** call is being sent.

Considerations

- This feature must be programmed on a button with lights on a system display phone.
- The user should make sure the green light next to the Caller ID Inspect button is fluttering before pressing a line or pool button or else the call the user is active on is disconnected, and the user is connected to the call on the line or pool button that was pressed.
- The user can inspect outside calls that appear on intercom buttons. (If the call is an intercom call, the default display is shown.)
- If users are not active on a call, they can press line, pool, and intercom buttons to view **Caller ID** or **Call Coverage** information for those lines; however, if they pick up the handset, they will join or answer the call shown on the display.

Programming

(See Figure 2-3 on page 2-23 for the location of special programming buttons such as System Program and Enter on system phones.)

To program a Caller ID Inspect button:

1. Press Feature 0 0 System Program System Program Central Tel Program at extension 10 or 11.
2. Enter the number of the extension to be programmed with this feature.
3. Press a programmable button with lights.
4. Press Feature 1 7.

5. Program another button for this extension or exit programming mode.

Using

1. While active on a call, press the programmed button.
   The green light flutters. Caller ID Inspect is activated.
2. Press a line, pool, or intercom button.
   The Caller ID or Call Coverage information for the selected line, pool, *or intercom displays.*
3. Press the programmed button to deactivate the feature.
   The feature is deactivated automatically if you hang up the handset or press any button other than a line, pool, or intercom button. The green light is off when the feature is deactivated.

Caller ID Log Answered Calls (#317)— Release 2.0 or Later

Description

This feature is available on 24-character PARTNER 18D and 34D display phones. It is not available for the MLS, MLC, MDW or Tip/Ring telephones.

This programming procedure allows a system administrator to program extensions to log **answered** Caller ID calls so that answered calls can be viewed in the Caller ID Call Log. Once this feature is activated for an extension, when a user activates the **Caller ID Call Logging and Dialing (F23)** all caller ID calls that are answered by that extension will be logged. A telephone symbol (a vertical handset) appears in the Call Status Display to indicate that the call being viewed has been answered.

The Caller ID Log Answered Call feature is useful when users may have no other way of tracking callers' phone numbers. For example, a sales representative who takes phone orders could find a number in the log for a caller whose credit card information is later determined to be invalid.

Related Features

- If you also want to log **unanswered** Caller ID calls, use the **Caller ID Call Log Line Association (#318)** programming procedure to program lines and extensions to log calls. You can select to log answered Caller ID calls only, unanswered Caller ID calls only, or you can choose to log both.
- **Transfer Return** calls that are answered at the return extension are not logged even if Caller ID Log Answered Calls is set to active.

Considerations

- To log Caller ID information, you must subscribe to a Caller ID service (if it is available) on a per-line basis from your local telephone company and connect Caller ID lines to the appropriate system modules.
- You cannot use **Caller ID Logging and Dialing (F23)** if **Station Lock (F21)** or **Caller ID Inspect (F17)** is active.
- To view the Caller ID Call Log, a **Caller ID Call Logging and Dialing** button must be programmed on a button with lights on a system display phone. (This feature will not work if it is programmed on a button *without* lights.)

Valid Entries

1 = Active (answered calls logged)
2 = Not active (answered calls are not logged) ✔

Programming

(See Figure 2-3 on page 2-23 for the location of special programming buttons such as System Program and Enter on system phones.)

To program the extension to log answered calls:

1. Press Feature 0 0 System Program System Program # 3 1 7 at extension 10 or 11.
2. Enter the number of the extension to be programmed. For example, to program extension 12, press 1 2.
3. To set Caller ID Log Answered Calls, press Next Data until the appropriate value displays. (See “Valid Entries.”)
4. To set Caller ID Log Answered Calls for another extension, press Next Item or Prev Item until the extension number shows on the display. Then repeat Step 3.
5. Select another procedure or exit programming mode.

Caller ID Call Log Line Association (#318)—Release 2.0 or Later

This feature is available on 24-character PARTNER 18D and 34D display phones. It is not available for the MLS, MLC, MDW or Tip/Ring telephones.

This system programming procedure allows you to associate lines with extensions for the purpose of logging **unanswered** calls. Multiple lines can be associated with an extension and multiple extensions can be associated with the same line. Caller ID calls can be logged only if they ring on an extension that is associated with a line that has been programmed for Call Logging.

Related Features

- If you also want to log **answered** Caller ID calls, use **Caller ID Log Answered Calls (#317)** to log answered calls at an extension. You can select to log answered Caller ID calls only, unanswered Caller ID calls only, or you can choose to log both.
- It is not necessary to associate lines and extensions to log unanswered transferred calls. Unanswered transferred calls are logged automatically.

Considerations

- To log Caller ID information, you must subscribe to Caller ID service (if it is available) on a per-line basis from your local telephone company and connect Caller ID lines to the appropriate system modules.
- To view the Caller ID Call Log, a **Caller ID Call Logging and Dialing** button must be programmed on a button with lights on a system display phone. (This feature will not work if it is programmed on a button *without* lights).
- You cannot use the Caller ID Logging and Dialing feature if **Station Lock (F21)** or **Caller ID Inspect (F17)** is active.

Valid Entries

1 = Assigned (Line is associated with an extension or extension is associated with a line.)
2 = Not Assigned (Line is not associated with an extension). ✔

(See Figure 2-3 on page 2-23 for the location of special programming buttons such as [System Program] and [Enter] on system phones.)

To associate a line with an extension for the purpose of logging caller ID information:

1. Press [Feature] [0] [0] [System Program] [System Program] [#] [3] [1] [8] at extension 10 or 11.

2. At the Extension prompt, enter the extension number to be programmed. For example, to program extension 23, press 2 3.
3. At the Line prompt, enter the line number to be associated with the extension. For example, to associate line 2 with the extension, press 0 2.
4. To change the line association for this extension, press Next Data until the appropriate value displays—see “Valid Entries.”
5. At this point:
   - To associate another line with this extension, press Next Item or Prev Item until the line number shows on the display. Repeat Step 4.
   - To associate another extension, press Next Procedure Prev Procedure and begin at Step 2.
6. Select another procedure or exit programming mode.

Caller ID Call Logging and Dialing (F23)—ACS Release 2.0 or Later

Description

This feature is available on 24-character PARTNER 18D and 34D display phones. It is not available for the MLS, MLC, MDW or Tip/Ring telephones.

Once the system administrator uses **Caller ID Call Log Line Association (#318)** at an extension to log unanswered calls, you use Caller ID Logging and Dialing (F23) to view the log. Caller ID Call Logging and Dialing is available on system display phones on all lines for which you subscribe to a Caller ID service. This feature gives users the ability to view Caller ID information for unanswered Central Office calls and unanswered Central Office calls transferred to an extension.

Up to 400 call records can be stored for the system. Each line that is associated with an extension to log Caller ID calls is guaranteed a minimum of 20 call records.

In addition, users can automatically dial the number stored in the log.

If **Caller ID Log Answered Calls (#317)** has also been programmed for the extension, this feature also allows users to view answered calls. You can select to log answered Caller ID calls only, unanswered Caller ID calls only, or you can choose to log both. Unanswered transferred calls are logged automatically, whether or not the line and extension are associated with the Caller ID Logging and Dialing feature.

The Caller ID information logged is the caller's number (or the reason that the number is not available), the caller's name (or the reason that the name is not available), and the date and time of the call. In addition, the system logs the line the call came in on; whether the log entry was viewed; whether the call was answered or not answered; and whether an attempt was made to return the call using the Dialing option.

Related Features

- To log Caller ID information, you must subscribe to a Caller ID service (if it is available) on a per-line basis from your local telephone company and connect Caller ID lines to the appropriate system modules.
- To enable a user to log calls and view the Call Log, use the **Caller ID Call Line Association (#318)** programming procedure to associate the line and extension with the call logging feature.
- Use the **Caller ID Log Answered Calls (#317)** programming procedure if you also want to log answered calls at the extension.

- All unanswered **Caller ID** calls that are transferred to another extension are logged at that extension.
- **Caller ID** calls transferred to a group are logged at every extension that alerts in the group if no one in the group answers the call. However, if a user answers the call at any extension in the group, it is not logged as unanswered at any extension.
- If a **Caller ID** call is answered by the **Direct Extension Dial** feature and the caller hangs up without dialing an extension, the call is not logged at any extension. However, if a caller dials an extension that is associated with the Caller ID Logging feature, the call is logged as unanswered if it is not answered at the extension.
- To prevent unauthorized persons from viewing the log, **Caller ID** calls cannot be viewed at a locked station.
- The date and time of an incoming call is logged from the Central Office. Therefore, the date and time of the call that a user sees on the system display phone may be different from the date and time reported in the SMDR report for the extension.

Considerations

- Any users who have system display phones and have lines with Caller ID can view and dial the numbers of logged Caller ID calls.
- To view the Caller ID Call Log, a **Caller ID Call Logging and Dialing** button must be programmed on a button with lights on a system display phone. (This feature will not work if it is programmed on a button *without* lights.) You can then use the feature with one touch.
- You cannot use the Caller ID Logging and Dialing feature if **Station Lock (F21)** or **Caller ID Inspect (F17)** is active.

Examples

The examples below show how unanswered Caller ID information is logged:

- Line 6 is associated with extensions 11 and 12 for Call Logging. If a Central Office call rings and is not answered on line 6, it is logged as “unanswered” on extensions 11 and 12. If it is answered, it is logged only if the answering extension has been programmed to log answered calls.
- Line 5 is associated with extension 11 for call logging. A user at extension 11 answers a call, transfers it to extension 12, and the caller hangs up before it is answered. The call is logged as unanswered at extension 12.
- When a call is answered, it is not logged unless the system has been programmed to log answered calls using the Caller ID Log Answered Calls (#317) programming procedure.

(See Figure 2-3 on page 2-23 for the location of special programming buttons such as System Program and Enter on system phones.)

To program a Call Log Display button:

1. Press (Feature) (0) (0) (System Program) (Central Tel Program) at extension 10 or 11.
2. Enter the number of the extension to be programmed with this feature.
3. Press a programmable button with lights.
4. Press (Feature) (2) (3).
5. Program another button for this extension or exit programming mode.

Using the Call ID Logging and Dialing Feature

When Caller ID information is logged for your extension and you have programmed a Call Log button, the word Calls is displayed, as shown in Figure 5-1.

```
02/26  Wed                    Calls
10:53 am
```

Figure 5-1. System Phone Display Showing Logged Calls

To view the log, press your preprogrammed Call Log button. *The green light flutters, the Call Log is activated. One of several messages is displayed. Press the* More *button* repeatedly until you see *the* Telephone Number Display.

At the Telephone Number Display, shown in Figure 5-2, the newest call in the log is shown. (The log displays the calls in last-in-first-out order.)
An `Out-of-Area` *message displays if the call was dialed from a region that does not support Caller ID. A* `Privacy` *message displays if the caller blocked transmission of Caller ID information. A* `No Number` *message displays if no information was received.*

```
*908-555-1234
Next    Erase      Dial     More
```

Figure 5-2. Caller ID Telephone Number Display

You have several options at this display:

- Press the `Next` button to view the next logged call.
  If you have a second logged call, it is displayed.
- Press the `Erase` button to erase the log record.
  An `Entry Erased` *message displays.*

- Press the `Dial` button to return the call (see dialing instructions below).
- Press the `More` button to view the caller's name.

At the Name Display, shown in Figure 5-3, the caller's name is shown. *An* `Out-of-Area` *message displays if the call was dialed from a region that does not support Caller ID. A* `Privacy` *message displays if the caller blocked transmission of Caller ID information. A* `No Name` *message displays if no information was received.*

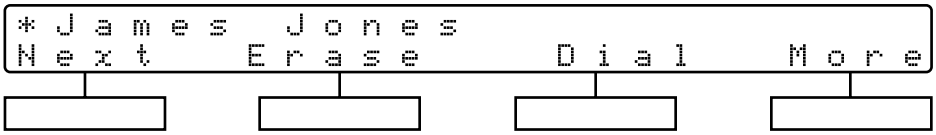

Figure 5-3. Caller ID Name Display

You have several options at the Name display:

- Press the `Next` button to view the next logged call.
  If you have a second logged call, it is displayed.
- Press the `Entry Erase` button to erase the log record.
  An Entry Erased message displays.
- Press the `Dial` button to return the call (See dialing instructions below).
- Press the `More` button to view the Call Status display.

At the Call Status display, you see the following information:

- At the left of the display, you see the date and time of the call and either `am` or `pm` to indicate whether the call arrived in the morning or afternoon.
- The entry in the next column indicates the line that the call came in on.
- The next entry (a vertical handset symbol) indicates whether the call was answered at the extension. If the call was not answered, this column is blank.
- In the next column, `D` indicates that a user attempted to use automatic dialing to return the call. If no callback was attempted, the column is blank.

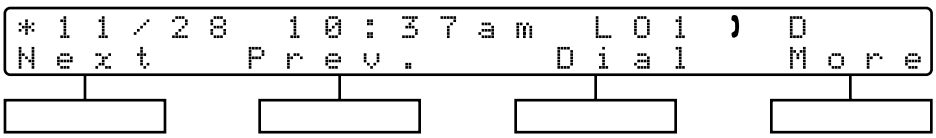

Figure 5-4. Call Status Display

If you want to return the call, press the `Dial` button. The display shown in Figure 5-5 appears.

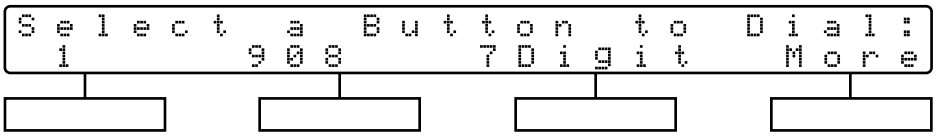

Figure 5-5. Call Log Dial Display

The button you press to dial the call depends on the number of digits you must dial to complete the call from your area:

— To dial the complete number including the 1, press the button on the left.

— To include the area code but not the 1, press the second button.

— To dial the seven-digit number only, press the third button.

- Press the `More` button to return to the Telephone Number or Name Display.
- Press the `Previous` button to view the previous call record.
- Press the `Next` button to view the record for another call.
- Press the Call Log Display button to exit the Call Log.
  The green light goes off when the feature is deactivated.

Caller ID Name Display (F16)

Description

This feature lets users with system display phones toggle the display between Caller ID number and Caller ID name. Caller ID name is an optional feature of the Caller ID service provided by your local telephone company and may not be available in your area (even if Caller ID number is available).

Related Features

- To view Caller ID information for a second call, while active on a call, users can program **Caller ID Inspect** onto a button.
- Refer to **Caller ID** for details on Caller ID information.
- This feature has no effect on **Call Coverage** calls. Coverage calls always display the extension number of the user who is sending calls for coverage.

Considerations

- This feature must be programmed on a button with lights on a system display phone. When Caller ID Name Display is on, the green light is on, indicating that the Caller ID name will be displayed rather than the Caller ID number.
- SMDR reports print *only* Caller ID number (where available). (If a number is not available, it is reported as “IN” on the call report.)

Programming

(See Figure 2-3 on page 2-23 for the location of special programming buttons such as (System Program) and (Enter) on system phones.)

To program a Caller ID Name Display button:

1. Press (Feature) (0) (0) (System Program) (System Program) (Central Tel Program) at extension 10 or 11.
2. Enter the number of the extension to be programmed with this feature.
3. Press a programmable button with lights.
4. Press (Feature) (1) (6).
5. Program another button for this extension or exit programming mode.

Using

Press the programmed button to turn Caller ID Name Display on; press it again to turn it off. *Use the button like a switch—when the light is on, Caller ID Name Display is on.*

Caller ID Type (#122)

Description

This System Programming procedure can be set for Singapore or USA operation.

USA Operation

Caller ID normally displays the number from which the incoming call is coming, replacing the system date and time display on system phones for the duration of the call. An out-of-area message (- - - - - - - - - - - -) displays if a call is being dialed from a region that does not support Caller ID. A privacy message (Priv.) displays if the caller has blocked transmission of Caller ID information.

Singapore Operation

Caller ID normally displays the number from which the incoming call is coming. When there is no incoming number, the system detects a “P” or an “O” in the “reason for DN (Directory Number) absence” field, and substitutes the information sent by the local telephone company Central Office in the Name parameter field:

- If the name is supplied, the system displays it.
- If the name is not supplied, either `Priv.` or - - - - - - - - - - - - is displayed.

Related Features

- The **Caller ID Name Display** feature affects whether the caller’s name is displayed (if available) instead of the caller’s number.
- **Caller ID Inspect** enables you to view Caller ID information for a second line while remaining active on the first call.
- Refer to **Caller ID** for details on Caller ID information.

Considerations

- The Caller ID Type you set applies to the entire system.
- A change to the Caller ID Type setting takes effect when the next Caller ID call comes into the system.

Valid Entries

1 = USA ✔
2 = Singapore

Programming

(See Figure 2-3 on page 2-23 for the location of special programming buttons such as System Program and Enter on system phones.)

To change the Caller ID Type setting:

1. Press Feature 0 0 System Program System Program # 1 2 2 at extension 10 or 11.
   The system shows the current setting.
2. Press Next Data or Prev Data until the appropriate value displays, or press Remove to return to the default setting.
3. Select another procedure or exit programming mode.

Calling Group Extensions (#502)

Description

This System Programming procedure identifies the extensions in a Calling Group—a group of extensions that can be called at the same time. Any user in the system can ring or page all extensions in a Calling Group at the same time or transfer a call to a Calling Group; the first extension to pick up the call is connected to the caller. This feature is useful for conversing with any individual in a specific group such as a sales pool or for paging all individuals in the group. The system can have up to four Calling Groups.

Related Features

- For instructions on making a ringing call or paging call to a Calling Group, see **Group Calling–Ring/Page**.
- Users can make simultaneous announcements over the loudspeaker paging system and the system phones assigned to Calling Group 1. See **Simultaneous Paging**.

Considerations

- Extensions can be in more than one Calling Group. In addition, you can assign *all* extensions in the system to one group—this is especially useful for making paging announcements to all employees.
- Do not assign extensions that connect auxiliary equipment (auto attendants, voice messaging systems, fax machines, answering machines, hotline phones, or doorphones) or extensions assigned as External Hotline phones to a Calling Group.

Valid Entries

1 = Assigned to group
2 = Not Assigned to group ✔

Programming

(See Figure 2-3 on page 2-23 for the location of special programming buttons such as (System Program) and (Enter) on system phones.)

To create a Calling Group:

1. Press (Feature) (0) (0) (System Program) (System Program) (#) (5) (0) (2) at extension 10 or 11.
2. At the Group: prompt, enter a group number (1–4). For example, to select group 1, press (1).

3. At the `Extension:` prompt, enter the number of the extension to be programmed. For example, to select extension 31, dial (3) (1).
4. To assign or unassign the extension, press (Next Data) until the appropriate value displays.
5. At this point:
   - To program another extension, press (Next Item) or (Prev Item) until the extension number shows on the display. Repeat Step 4.
   - To program another group, press (Next Procedure) or (Prev Procedure) and repeat Steps 2 through 4.
6. Select another procedure or exit programming mode.

Conference Calls

Description

This section explains how to set up conference calls using the Conf button on a system phone or the switchhook on a standard phone. A conference call connects up to five parties (including the conference originator) in a single call. Users can connect both outside and inside parties in a conference call, *but the call cannot include more than two outside parties*.

Related Features

- You can use **Outside Conference Denial (#109)** to disallow conference calls with multiple outside parties.
- During the conference call, any inside party can exit the call at any time simply by hanging up. However, if an outside party hangs up during a conference call, the callers that remain in the conference may hear a dial tone. Use **Conference Drop** to remove the last-added outside party from a conference call.
- **Caller ID** information does not display for extensions that are active on a conference call.

Considerations

- Users can use **System Speed Dial**, **Personal Speed Dial**, or **Auto Dial** numbers to add parties to the conference.
- Do not add a busy or ringing outside call to a conference; if you do, all callers hear the busy or ringing signal. If you hear a busy signal or the party does not answer, reconnect with the held party by pressing the line button.
- Users cannot join a conference call; the originator must add each party to the conference.
- If the conference originator puts the call on hold, other parties can continue to talk. Other inside parties can put their extensions on hold if there are outside parties on the conference call.
- When the originator hangs up, the conference is disconnected.
- Conference calls cannot be transferred.
- If you are using the system behind a PBX or Centrex system, the PBX or Centrex system may include a conference calling feature that lets you connect multiple callers *on a single PBX or Centrex line*. The number of callers you can connect depends on your PBX or Centrex system. For more information about such features, see the documentation for your PBX or Centrex system. (When your Centrex or PBX documentation tells you to use a switchhook flash, use the **Recall** feature instead.)

- Outside parties may be harder to hear on a conference call than on a two-party call, depending on the number of parties and the outside lines connected to the system.

Using

System Phone

1. Set up the call to the first party. (You can call the party, pick up the call from hold, or answer an incoming call.)
   You are connected with the first party.
2. Press (Conf).
   The first party is now on hold.
3. Set up the call to the second party.
   You are connected with the second party. If you are adding an inside party to a call, you must wait until the party answers. If you are active on a call using a pool button and you want to set up a conference call using one of the other lines in that pool, you can press (Intercom) and dial the pool's access code to gain access to another line in that pool.
4. Press (Conf) again to add the second party to the call.
   You can now speak with the first and second parties.
5. Repeat Steps 2 through 4 to add more parties.

Standard Phone

1. Set up the call to the first party. (You can call the party, pick up the call from hold, or answer an incoming call.)
   You are connected with the first party.
2. Press the switchhook down once rapidly.
   The first party is now on hold. You hear intercom dial tone.
3. To add an outside party, dial (9) or a pool access code plus the outside number. If the number is busy or does not answer, hang up and the first party rings back.

   To add an inside party, dial the two-digit extension number. If the extension is busy or does not answer, press the switchhook down once rapidly and you are reconnected with the first party.
4. When the second party answers, press the switchhook down once rapidly.
   You are now connected with both parties.
5. Repeat Steps 2 through 4 to add more parties.

Conference Drop (F06)

Description

This feature drops the last outside party added to a conference call, without disconnecting the other parties.

Related Features

- For instructions on setting up conference calls, see **Conference Calls**.
- You can use **Outside Conference Denial (#109)** to disallow conference calls with multiple outside parties.

Considerations

You can program a Conference Drop button on a system phone to use the feature with one touch.

Programming

(See Figure 2-3 on page 2-23 for the location of special programming buttons such as (System Program) and (Enter) on system phones.)

To program a Conference Drop button:

1. Press (Feature) (0) (0) (System Program) (System Program) (Central Tel Program) at extension 10 or 11.
2. Enter the number of the extension to be programmed with this feature.
3. Press a programmable button.
4. Press (Feature) (0) (6).
5. Program another button for this extension or exit programming mode.

Using

System Phone

Press the programmed button or press (Feature) (0) (6).
The last-added outside party is dropped from the conference.

Standard Phone

Press the switchhook down once rapidly.
The last-added party (inside or outside) is dropped from the conference.

Contact Closure (F41 and F42)

Description

The system can drive an optional Contact Closure Adjunct with two Contact Closures to operate auxiliary devices such as electronic door locks. You can assign one or more extensions to a Contact Closure Group for each of these Contact Closures. Only these extensions can control the activation of the Contact Closures by using Feature 4 1 for Contact Closure 1 and Feature 4 2 for Contact Closure 2, or by programming these dial codes onto buttons on their phones. See Appendix A, “Specifications,” for information about electrical requirements for the Contact Closure Adjunct.

Related Features

- Before a user can activate a Contact Closure, you must assign the user’s extension to the **Contact Closure Group (#612)** for that Contact Closure.
- Use **Contact Closure Operation Type (#613**) to specify how long the Contact Closure remains active when activated.

  If the Contact Closure Operation Type is set to Toggle, one user can activate the Contact Closure and another user can deactivate it, provided both users are included in the Contact Closure Group for that Contact Closure.

  When the Contact Closure Operation Type is set to Toggle, if a user activates the Contact Closure (so that the toggle is On) and then a power failure occurs, the toggle automatically changes to Off as a security measure.
- If you plan to use a Contact Closure to control a door lock, you may also want to install a doorphone at that door. Use **Doorphone Extension (#604 or #605)** to identify the extension to which the doorphone is connected, and **Doorphone Alert Extensions (#606)** to identify the extensions that signal when the doorphone button is pressed. You can assign some or all of the Doorphone Alert extensions to a **Contact Closure Group (#612)**, so that users at those extensions can control the door lock.

Considerations

It is recommended that users program Feature 4 1 and/or Feature 4 2 on buttons with lights so that they can monitor the status of the Contact Closures. The button’s green light will light when the Contact Closure is activated by that user, and the red light will light when the Contact Closure is activated by another user in that Contact Closure Group. The light will go out when the Contact Closure is deactivated.

Programming

(See Figure 2-3 on page 2-23 for the location of special programming buttons such as System Program and Enter on system phones.)

To program a Contact Closure button:

1. Press Feature 0 0 System Program System Program Central Tel Program at extension 10 or 11.
2. Enter the number of the extension to be programmed with this feature.
3. Press a programmable button, preferably one with lights.
4. Press Feature 4 1 (for Contact Closure 1) or Feature 4 2 (for Contact Closure 2).
5. Program another button for this extension or exit programming mode.

Using

System Phone

To activate a Contact Closure:

1. Press the programmed button or press Feature 4 1 (for Contact Closure 1) or Feature 4 2 (for Contact Closure 2).
   The green light is on steady.
2. If the Contact Closure Operation Type for that Contact Closure is set to Toggle, repeat Step 1 to deactivate the Contact Closure.
   The green light goes off.

Standard Phone

To activate a Contact Closure:

1. Pick up the handset to get an intercom dial tone.
2. Press # 4 1 (for Contact Closure 1) or # 4 2 (for Contact Closure 2).
3. If the Contact Closure Operation Type for that Contact Closure is set to Toggle, repeat Steps 1 and 2 to deactivate the Contact Closure.

Contact Closure Group (#612)

Description

The PARTNER ACS processor module has a jack to connect a Contact Closure Adjunct that has two Contact Closures. This System Programming procedure allows you to specify which user extensions can activate each Contact Closure. The Contact Closures can control devices such as electronic door locks.

Related Features

- Use **Contact Closure Operation Type (#613)** to specify how long each Contact Closure remains active when activated.
- If a **Contact Closure** is used to control a door lock and a doorphone is installed at that door, you may want to assign the extensions in the Contact Closure Group to also be the **Doorphone Alert Extensions (#606)** for that doorphone.
- When a user's extension is included in the appropriate Contact Closure Group, the user can then use **Contact Closure** to activate the contact closure device.

Valid Entries

1 = Assigned to the Contact Closure Group
2 = Not Assigned to the Contact Closure Group ✔

Programming

(See Figure 2-3 on page 2-23 for the location of special programming buttons such as (System Program) and (Enter) on system phones.)

To assign extensions to a Contact Closure Group:

1. Press (Feature) (0) (0) (System Program) (System Program) (#) (6) (1) (2) at extension 10 or 11.
2. At the Contact Number: prompt, enter the number for the Contact Closure (1 or 2). For example, to assign extensions to Contact Closure 1, press (1).
3. At the `Extension:` prompt, enter the two-digit extension number that you want to assign to this Contact Closure Group. For example, to assign extension 14 to this group, press (1) (4).
4. To assign or unassign the extension, press (Next Data) until the appropriate value displays.
5. At this point:

- To assign or unassign another extension to the same Contact Closure Group, press (Next Item) or (Prev Item) until the correct extension is displayed. Then repeat Step 4.
- To assign extensions to the other Contact Closure Group, press (Next Procedure) or (Prev Procedure), and begin at Step 2.

6. Select another procedure or exit programming mode.

Contact Closure Operation Type (#613)

Description

This System Programming procedure specifies how long the Contact Closures remain active when they are activated. A Contact Closure can be activated for 1, 3, or 5 seconds; or the Contact Closure can be set to toggle.

If a Contact Closure that controls a door lock has a Contact Closure Operation Type of “5-Seconds On,” for example, the door lock is released for 5 seconds when a user activates the Contact Closure. If the Contact Closure has a Contact Closure Operation Type of “Toggle,” the Contact Closure must be activated and deactivated. One user can activate the Contact Closure and another user can deactivate it (provided both users are included in the Contact Closure Group for that Contact Closure), or the same user can both activate and deactivate the Contact Closure. (For more information about Contact Closure devices, see “Contact Closure Devices” on page 4-14.)

Related Features

- Before a user can activate a contact closure, you must assign the user’s extension to the **Contact Closure Group (#612)** for that Contact Closure.
- When a user’s extension is included in the appropriate Contact Closure Group, the user can then use **Contact Closure** to activate the contact closure device.

Valid Entries

1 = 1-Second On
2 = 3-Seconds On✔
3 = 5-Seconds On
4 = Toggle

Programming

(See Figure 2-3 on page 2-23 for the location of special programming buttons such as System Program and Enter on system phones.)

To specify the Operation Type for a Contact Closure:

1. Press Feature 0 0 System Program System Program # 6 1 3 at extension 10 or 11.
2. At the `Contact Number:` prompt, enter the number (1 or 2) for the Contact Closure. For example, to specify Contact Closure 1, press 1. *The display shows the current setting for that contact closure.*

3. Press (Next Data) or (Prev Data) until the appropriate value displays, or press (Remove) to return to the default setting.
4. To assign the Operation Type for the other Contact Closure, press (Next Item) (Prev Item), and repeat Step 3.
5. Select another procedure or exit programming mode.

Copy Settings (#399)

Description

This System Programming procedure copies all of the following settings from one extension to another:

#301 Line Assignment
#302 Line Access Restriction
#303 Display Language
#304 Automatic Extension Privacy
#305 Abbreviated Ringing
#307 Forced Account Code Entry
#308 Distinctive Ring
#309 Intercom Dial Tone
#310 Automatic VMS Cover
#311 External Hotline
#312 Voice Interrupt On Busy Automatic
#313 Line Access Mode Line Ringing
#314 Pool Extension Assignment
#315 Pool Access Restriction
#316 Call Waiting
#317 Caller ID Call Logging and Dialing
#318 Caller ID Log Answered Calls
#401 Outgoing Call Restriction
#405 Disallowed List Assignments
#408 Allowed List Assignments
#501 Pickup Group Extensions
#502 Calling Group Extensions
#504 Night Service Group
#505 Hunt Group Extensions
#601 Fax Machine Extensions
#607 AA Extensions
#612 Contact Closure Group
Automatic Line Selection
Line Ringing

Considerations

- This procedure is skipped in the sequence of programming procedures when cycling. To use this procedure, enter the code (**#399**) directly.
- For each type of phone, program one extension, then use this procedure to copy the programming from that extension to the others with the same number of line or pool buttons (for example, from a PARTNER-18D phone to a PARTNER-18 phone).
- Pooled extension settings can be copied to key extensions, except for extension 10. Key extension settings can be copied to pooled extensions.

Programming

(See Figure 2-3 on page 2-23 for the location of special programming buttons such as (System Program) and (Enter) on system phones.)

To copy the programmed settings from one extension to another of the same type:

1. Press (Feature) (0) (0) (System Program) (System Program) (#) (3) (9) (9) at extension 10 or 11.

2. At the `Extension:` prompt, enter the source extension to copy from. For example, to copy the current settings from extension 18, press 1 8.
3. At the `Data- - - - - - - - - - - -` prompt, enter the target extension to copy to—any extension except the source extension is valid. For example, to copy to extension 22, press 2 2.
4. At this point:
   - To copy the same settings to another extension, enter the new extension number.
   - To copy another extension's settings, press *Next Item* or *Prev Item* until the extension number shows on the display. Repeat Step 3.
5. Select another procedure or exit programming mode.

Dial Mode (#201)

Description

This System Programming procedure identifies individual lines as touch-tone or rotary. You should check with your local phone company if you are not sure which type of line is being provided to you.

Related Features

- If you are having difficulty using touch-tone phones on rotary lines, you may need to adjust the **Rotary Dialing Timeout (#108)**.
- If the system has rotary lines, you can use **Touch-Tone Enable** to send touch-tone signals over a rotary line (for example, to access bank-by-phone services).
- If Dial Mode (#201) is set to Rotary, star codes are entered by dialing 11 instead of *. If you have users at extensions with **Outgoing Call Restriction (#401)** set to Local Only who are calling out on lines with the Dial Mode (#201) set to Rotary, you should add “11” to an **Allowed Phone Numbers List (#407)** and assign the list to these extensions. Otherwise, when the users at the restricted extensions dial 1 to begin a star code, the system interprets this as an attempt to place a long-distance call, the call is blocked, and the user hears the reorder tone.

Valid Entries

1 = Touch-Tone line ✔
2 = Rotary line

Programming

(See Figure 2-3 on page 2-23 for the location of special programming buttons such as System Program and Enter on system phones.)

To change the Dial Mode setting for a specific line:

1. Press Feature 0 0 System Program System Program # 2 0 1 at extension 10 or 11.
2. Enter the first line to be programmed. For example, to program line 8, press 0 8.
3. To change the dial mode, press Next Data until the appropriate value displays.
4. To program another line, press Next Item or Prev Item until the line number shows on the display. Then repeat Step 3.
5. Repeat Steps 3 and 4 for all lines that you want to change.
6. Select another procedure or exit programming mode.

Direct Extension Dial Button (#113)— Release 2.0 or Later

Description

This feature is available only on the system phone at extension 10.

This System Programming procedure identifies a button to be used to turn Direct Extension Dial (DXD) on and off. This feature permits an outside caller to dial an extension or Hunt Group directly, without the aid of the receptionist. It is ideal for outside callers who frequently talk with specific employees or service groups, and know the extension number they are trying to reach. When an outside call rings on a line programmed with Direct Extension Dial, the system picks it up after a specified number of rings and plays a short message prompting the caller to dial the digits of the designated extension or Hunt Group.

Related Features

- Do not use this feature in places where **Hold Disconnect Time (#203)** is not recognized, because if a caller hangs up after Direct Extension Dial answers, the line will appear to be busy.
- The Direct Extension Dial button returns to the status (on/off) it was in before a power failure occurred or **System Reset (#728)** was used.
- Direct Extension Dial affects incoming calls only on lines identified using **Direct Extension Dial Lines (#205)**.
- Calls that ring on Direct Extension Dial lines are picked up after two rings, as a default. To change the number of rings, use **Direct Extension Dial Delay (#112)**.
- You must use **Direct Extension Dial Record/Playback** to record a message to prompt callers to dial an extension number or Hunt Group number after the system answers an outside call.
- If Direct Extension Dial is on, callers hear ringing when the call is transferred regardless of the **Music On Hold (#602)** or **Ring on Transfer (#119)** setting.
- By default, unanswered calls return to extension 10. You can use **Transfer Return Extension (#306)** to specify a different Transfer Return Extension for extension 10. In this case, all unanswered Direct Extension Dial calls return to the specified extension as do unanswered calls manually transferred by extension 10.
- If **Do Not Disturb** is active at a directly dialed extension, the call returns to extension 10 (or its transfer return extension), unless **Call Forwarding, Call Coverage,** or **VMS Cover** is used.

- You can set **SMDR Talk Time (#611)** to Active to include the Talk field on call reports. For an incoming outside call answered by Direct Extension Dial, this field shows the call duration minus the time the greeting played and the caller waited for someone to answer the call.
- **Automatic System Answer** is an alternative system answering feature that aids the receptionist during busy periods.

Considerations

- The Automatic System/Direct Extension Dial PC card is purchased separately and must be installed (see the “PARTNER ACS PC Card Installation Instructions.”
- Use the **Direct Extension Dial Record/Playback** to record a message before using Direct Extension Dial since there is no default message.
- It is recommended that you use only one automated answering option for incoming calls (either this feature, the Automated Attendant Service of the voice messaging system, or a PARTNER Attendant).
- Direct Extension Dial does not transfer calls to Calling Groups.
- This feature can handle three outside calls simultaneously.
- If you have lines programmed for **Direct Extension Dial** and **Automatic System Answer**, Direct Extension Dial answers the call first.
- A Direct Extension Dial button must be programmed on a button with lights on the system display phone at extension 10. (This feature will not work if it is programmed on a button without lights.)

Valid Entries

1 =Assigned
2 =Not Assigned ✔
3 =Select button (then press a programmable button to assign Direct Extension Dial to that button)

Programming

(See Figure 2-3 on page 2-23 for the location of special programming buttons such as System Program and Enter on system phones.)

To assign or unassign a Direct Extension Dial button with lights at extension 10:

1. Press Feature 0 0 System Program System Program # 1 1 3.
2. If you want to assign Direct Extension Dial to the first available button, press Next Data until a display similar to the following appears:

```
DXD Button
1 Assigned - Ext10
```

If you want to unassign Direct Extension Dial, press (Next Data) until a display similar to the following appears:

```
DXD Button
2 Not Assigned
```

If you want to assign Direct Extension Dial to a specific button, press 3. The display reads:

```
DXD Button
3 Select a Button
```

Then press a programmable button with lights to assign Direct Extension Dial to that button.

3. Select another procedure or exit programming mode.
4. Label the Direct Extension Dial button at extension 10.

Using

To turn Direct Extension Dial on:

Press the Direct Extension Dial button at extension 10.
The green light is on steady and Direct Extension Dial is on. If calls are ringing when Direct Extension Dial is turned on, the calls will be answered immediately by the system.

To turn Direct Extension Dial off:

Press the Direct Extension Dial button at extension 10.
The green light goes off and Direct Extension Dial is off. Any calls in the process of being answered by the system will continue to hear the recorded message and will be prompted to enter a destination extension.

Direct Extension Dial Delay (#112)— Release 2.0 or Later

Description

This System Programming procedure specifies the number of times (0–9) an incoming call should ring before it is answered by the Direct Extension Dial feature.

Related Features

- Direct Extension Dial affects incoming calls only on lines identified using **Direct Extension Dial Lines (#205)**.
- You must program a button on the system display phone at extension 10 to turn Direct Extension Dial on and off. Use **Direct Extension Dial Button (#113)** to program the button.
- You must use **Direct Extension Dial Record/Playback** to record a message to prompt callers to dial an extension number or Hunt Group number after the system answers an outside call.
- You can set **SMDR Talk Time (#611)** to Active to include the Talk field on call reports. For an incoming outside call answered by Direct Extension Dial, this field shows the call duration minus the time the greeting played and the caller waited for someone to answer the call.
- If you use **Caller ID**, make sure Direct Extension Dial Delay is set to 2 rings or more to ensure that Caller ID information is captured.

Considerations

- The Automatic System/Direct Extension Dial PC card is purchased separately and must be installed. If the PC Card has not been installed, see the "*PARTNER ACS PC Card Installation Instructions*."
- Use the **Direct Extension Dial Record/Playback** feature to record a message before using Direct Extension Dial since there is no default message.
- This feature works independently of **Line Ringing,** which determines how an outside call rings at the extension—immediately, after a 20 second delay, or not at all. Direct Extension Dial Delay specifies the number of rings a caller hears before the system answers the call.

Valid Entries

0–9 (0 rings = answered immediately)
2✔

Programming

(See Figure 2-3 on page 2-23 for the location of special programming buttons such as System Program and Enter on system phones.)

To change the number of times an incoming call rings at extension 10 before the system answers it:

1. Press Feature 0 0 System Program System Program # 1 1 2.
2. To change the number of rings, press Next Data until the appropriate value displays.
3. Select another procedure or exit programming mode.

Direct Extension Dial Lines (#205)—Release 2.0 or Later

Description

This System Programming procedure identifies the lines on which incoming calls are to be answered for Direct Extension Dial.

Related Features

- You must program a button on the system display phone at extension 10 to turn Direct Extension Dial on and off. Use **Direct Extension Dial Button (#113)** to program the button.
- Calls that ring on lines programmed with Direct Extension Dial are picked up after two rings, as a default. To change the number of rings, use **Direct Extension Dial Delay (#112)**.
- You must use **Direct Extension Dial Record/Playback** to record a message to prompt callers to dial an extension number or Hunt Group number after the system answers an outside call.
- You can set **SMDR Talk Time (#611)** to Active to include the Talk field on call reports. For an incoming outside call answered by Direct Extension Dial, this field shows the call duration minus the time the greeting played and the caller waited for someone to answer the call.

Considerations

- The Automatic System/Direct Extension Dial PC card is purchased separately and must be installed. If the PC Card has not been installed, see the “PARTNER ACS PC Card Installation Instructions.”
- Use the **Direct Extension Dial Record/Playback** feature to record a message before using Direct Extension Dial since there is no default message.
- All lines programmed with Direct Extension Dial should be assigned to extension 10 or its transfer return extension.
- If a caller enters an invalid extension number or does not enter one at all, the call is transferred to the receptionist at extension 10 (or to the designated transfer return extension for extension 10).
- To intercept a call while the message is playing—the red light next to the line button is on steady—press the line button and lift the handset. The message stops playing when the call is retrieved.

Valid Entries

1 = Assigned
2 = Not Assigned ✔

Programming

(See Figure 2-3 on page 2-23 for the location of special programming buttons such as (System Program) and (Enter) on system phones.)

To identify the lines on which outside calls should be answered for Direct Extension Dial:

1. Press (Feature) (0) (0) (System Program) (System Program) (#) (2) (0) (5).
2. Enter the desired system line number. For example, to specify line 1, press (0) (1).
3. To assign or unassign Direct Extension Dial, press (Next Data) until the appropriate value displays.
4. To specify another line, press (Next Item) or (Prev Item) until the line number shows on the display. Then repeat Step 3.
5. Repeat Steps 3 and 4 for all desired lines.
6. Select another procedure or exit programming mode.

Direct Extension Dial Record/Playback (I892)—Release 2.0 or Later

Description

This feature lets you record and play back the message that callers hear when a call is answered by the Direct Extension Dial feature. The maximum length of the message is 40 seconds.

Related Features

- Direct Extension Dial affects incoming calls only on lines identified using **Direct Extension Dial Lines (#205)**.
- You must program a button with lights on the system display phone at extension 10 to turn Direct Extension Dial on and off. Use **Direct Extension Dial Button (#113)** to program the button.
- Calls that ring on lines programmed with Direct Extension Dial are picked up after two rings, as a default. To change the number of rings, use **Direct Extension Dial Delay (#112)**.
- You can set **SMDR Talk Time (#611)** to Active to include the Talk field on call reports. For an incoming outside call answered by Direct Extension Dial, this field shows the call duration minus the time the greeting played and the caller waited for someone to answer the call.

Considerations

- The Automatic System/Direct Extension Dial PC card is purchased separately and must be installed. If the PC Card has not been installed, see the “PARTNER ACS PC Card Installation Instructions.”
- You should record a message before using Direct Extension Dial since there is no default message.
- You can record only one message for this feature.
- If you do not record a message for Direct Extension Dial, callers will not know to enter an extension or Hunt Group number when the call is answered.
- You must record the Direct Extension Dial message from the system display phone at extension 10 or 11.
- You cannot record or play a message while **Direct Extension Dial** or **Automatic System Answer** is answering a call. When you want to record or play a message, turn off Direct Extension Dial and Automatic System Answer and wait for any calls in the process of being answered by the system to be completed.

Using

(See Figure 2-3 on page 2-23 for the location of special programming buttons such as System Program and Enter on system phones.)

To record a Direct Extension Dial message:

1. Turn off **Direct Extension Dial** and **Automatic System Answer** at extension 10 and wait for any calls in the process of being answered by these features to be completed.
2. Lift the handset of the system display phone at extension 10 or 11.
3. Press the Intercom button.
4. Dial 8 9 2. The current time of day remains on the second line of the display for the duration of this procedure. The top line of the display reads:

   `DXD: 1=Record`

   If a message was previously recorded, a display similar to the following appears:

   `DXD: 1=Record 2=Play`

5. Press 1. A display similar to the following appears for three seconds:

   `Record at the tone`

   After three seconds, you hear a tone and you can begin recording your message. While you are recording, the following display appears:

   `Press # to stop`

6. Press # when you are done recording.

   If the allotted time (40 seconds) for the message is completed before you press #, you hear a tone to let you know that the system has stopped recording.

   When you finish recording, a display similar to the following appears:

   `DXD: 1=Record 2=Play`

7. At this point:
   - To re-record the message, follow the instructions from Step 5 in this procedure.
   - To play back the message, follow the instructions from Step 5 in the playback procedure that follows.
   - To exit the procedure, hang up the handset.

To play back a Direct Extension Dial message:

1. Turn off **Direct Extension Dial** and **Automatic System Answer** at extension 10 and wait for any calls in the process of being answered by these features to be completed.

2. Lift the handset of the system display phone at extension 10 or 11.
3. Press the (Intercom) button.
4. Dial (8) (9) (2). A display similar to the following appears:

```
DXD: 1=Record 2=Play
```

5. Press (2). The following display appears:

```
Message Playback
```

   After the message is played back, you hear a confirmation tone and a display similar to the following appears:

```
DXD: 1=Record 2=Play
```

6. At this point:
   - To re-record the message, follow the instructions from Step 5 in the procedure for recording a message.
   - To play back the message, follow the instructions from Step 5 in this procedure.
   - To exit the procedure, hang up the handset.

Direct Line Pickup—Active Line (I68LL)

Description

This feature allows users to access a ringing or held call, or to join a call in progress on a specific outside line (where *LL* is a system line number).This feature is useful for picking up a ringing or held call or for joining a call on a line that is not assigned to the phone.

Related Features

- If a line is *idle*, users cannot access it with this feature (they hear busy tone). For information about accessing an idle line, see **Direct Line Pickup—Idle Line**.
- If **Line Access Restriction (#302)** or pool Access Restriction (#315) is set to No Access or Out Only for a line assigned to an extension or lines within a pool, a user at the restricted extension hears busy tone if Direct Line Pickup is used to answer a call on that line which is ringing at another extension (but the user can join a call or access a held or transferred call on the line).
- Direct Line Pickup cannot be used to access an active call at an extension that has **Privacy** activated or that is part of a **Conference Call**, or a held call at an extension that used **Exclusive Hold**.
- Calls picked up with this feature get **Caller ID** information, unless **Line Access Restriction (#302**) or **Pool Access Restriction (#315)** is used to prevent users at specific extensions from viewing Caller ID for ringing calls.

Considerations

- This feature is useful when users are requested or paged to pick up a call on a specific line that does not appear on their phone.
- Users *cannot* access conference calls using this feature.
- You can program a Direct Line Pickup—Active Line button on a system phone to pick up a line by pressing the button then dialing the two-digit line number.

Programming

(See Figure 2-3 on page 2-23 for the location of special programming buttons such as System Program and Enter on system phones.)

To program a Direct Line Pickup—Active Line button:

1. Press Feature 0 0 System Program System Program Central Tel Program at extension 10 or 11.

2. Enter the number of the extension to be programmed with this feature.
3. Press a programmable button.
4. Press left (Intercom) (6) (8).
5. Program another button for this extension or exit programming mode.

Using

System Phone

1. If you want, lift the handset.
2. Press a button programmed with Direct Line Pickup—Active Line, then dial the two-digit system line number of the line you want to pick up or join; or press (Intercom) (6) (8) and the two-digit line number.
   If you did not lift the handset, the speaker comes on automatically.

Standard Phone

1. Lift the handset.
   You hear intercom dial tone.
2. Dial (6) (8) and the two-digit system line number of the line you want to pick up or join.

Direct Line Pickup—Idle Line (I8LL)

Description

This feature allows users to access a specific outside line (where *LL* is a system line number) when the line is not in use. This feature is useful for accessing a line that is not assigned to the phone.

Related Features

- If a line is *in use,* users cannot access it with this feature (they hear busy tone). For information about accessing a ringing or held call, or joining a call in progress, see **Direct Line Pickup—Active Line**.
- If **Line Access Restriction (#302)** or pool Access Restriction (#315) is set to No Access or In Only for a line assigned to an extension or lines within a pool, a user at the restricted extension hears busy tone if Direct Line Pickup is used to access that line to place a call.

Considerations

- This procedure applies to individual lines. If you have a pooled extension and you want to access lines in pools that are not assigned to your extension, dial the pool access code at intercom dial tone.
- You can program a Direct Line Pickup—Idle Line button on a system phone to pick up a line by pressing the button then dialing the two-digit line number.

Programming

(See Figure 2-3 on page 2-23 for the location of special programming buttons such as System Program and Enter on system phones.)

To program a Direct Line Pickup—Idle Line button:

1. Press Feature 0 0 System Program System Program Central Tel Program at extension 10 or 11.
2. Enter the number of the extension to be programmed with this feature.
3. Press a programmable button.
4. Press left Intercom 8.
5. Program another button for this extension or exit programming mode.

Using

System Phone

1. If you want, lift the handset.
2. Press the programmed button and dial the two-digit system line number of the idle line you want to access; or press (Intercom) (8) and the two-digit line number.
   If you did not lift the handset, the speaker comes on automatically.

Standard Phone

1. Lift the handset.
   You hear intercom dial tone.
2. Dial (8) and the two-digit system line number of the idle line you want to access.

Disallowed List Assignments (#405)

Description

This System Programming procedure lets you assign up to eight Disallowed Phone Number Lists to specified extensions.

Related Features

You must use **Disallowed Phone Number Lists (#404)** to create the lists of disallowed telephone numbers *before* you use this procedure.

Considerations

When a Disallowed Phone Number List is assigned to an extension, the list applies to *all* lines to which the extension has access.

Valid Entries

1 = Assigned to extension
2 = Not Assigned to extension✔

Programming

(See Figure 2-3 on page 2-23 for the location of special programming buttons such as (System Program) and (Enter) on system phones.)

To assign Disallowed Phone Number Lists to an extension:

1. Press (Feature) (0) (0) (System Program) (System Program) (#) (4) (0) (5) at extension 10 or 11.
2. Enter the number of the extension to be programmed. For example, to program extension 27, press (2) (7). A display similar to the following appears:

```
Disallow To 27
List Number:
```

3. Enter the list number (1–8). For example, to select list 1, press (1).
4. To assign or unassign the list, press (Next Data) until the appropriate value displays.
5. At this point:

- To assign or unassign another list for this extension, press (Next Item) or (Prev Item) until the list number shows on the display. Then repeat Step 4.
- To program another extension, press (Next Procedure) or (Prev Procedure) and begin at Step 2.

6. Select another procedure or exit programming mode.

Disallowed Phone Number Lists (#404)

Description

This System Programming procedure specifies telephone numbers that users cannot dial. For example, you may want to prevent calls to a specific telephone number or to categories of numbers, such as international numbers. Use this procedure to create up to eight lists of up to 10 telephone numbers each.

Related Features

- After completing this procedure, you must use **Disallowed List Assignments (#405)** to assign the Disallowed Phone Number Lists to specific extensions.
- **Allowed Phone Numbers**, **Emergency Phone Numbers**, and **Marked System Speed Dial Numbers** override the Disallowed List.
- The entries you must make to permit or restrict toll calls differ depending on the setting for **Toll Call Prefix (#402)**. This setting tells the system whether a “0” (for operator-assisted calls) or “1” (for direct-dial calls) is required when you make toll calls.
- If **Star Code Dial Delay (#410)** is active, the system checks for allowed and disallowed phone numbers *again* beginning with the first digit after the star code.

Considerations

- Each list entry can include up to 12 digits. You can use the wildcard character (by pressing the (Hold) button on a system phone) to match any single digit (it appears as “!” on the telephone display).
- When a user dials a number that is on a Disallowed List for the user’s extension, the user hears a reorder tone (fast busy signal) after dialing the part of the number that is stored in the list (for example, an area code).
- If you want to go to another programming procedure when entering phone numbers in a list, you must use (Next Procedure) or (Prev Procedure) to do so since entering (#) and a three-digit code will be considered data for the telephone number.

Valid Entries

Up to 12 digits including 0–9, (#), (*), and (Hold) (any single digit)

Examples

The examples below show how to enter telephone numbers for a Disallowed Phone Number List in Step 4 of “Programming.”

- **Specific Telephone Numbers.** Enter the phone number exactly as you would dial it. For example, to prevent calls to the local number 555-5678, press ⑤ ⑤ ⑤ ⑤ ⑥ ⑦ ⑧.
- **All Telephone Numbers in One Area Code.** The following list entries prevent calls to the 900 area code:

  — *Toll Call Prefix required*

  `1900 and 0900`

  — *Toll Call Prefix not required*

  `900 and 0900`

- **All Telephone Numbers in One Exchange.** The following entries prevent calls to the 976 exchange:

  — *Toll Call Prefix required*

976	Prevents local calls
1!!!976	Prevents direct-dial calls to all area codes
0!!!976	Prevents operator-assisted calls to all area codes
1976	Prevents direct-dial toll calls in the same area code (needed only when 0 or 1 is required for toll calls in the same area code)
0976	Prevents operator-assisted toll calls in the same area code (needed only when 0 or 1 is required for toll calls in the same area code)

  — *Toll Call Prefix not required*

976	Prevents local calls
!0!976	Prevents calls to area codes with “0” as the second digit, such as 203
!1!976	Prevents calls to area codes with “1” as the second digit, such as 212

- **International Long Distance.** To prevent international calls, enter the international prefix number, 011.
- **All Star Codes**. To prevent the use of all star codes, enter * (for touch-tone phones) and 11 (equivalent to a * on rotary phones).

- **Specific Star Codes**. To prevent the use of a specific star code (for example, *67 to block Caller ID information), enter the * plus the 2- or 3-digit code (for touch-tone phones) and 11 (equivalent to a * on rotary phones) plus the 2- or 3-digit code.

  — *For touch-tone phones*

*67	Prevents use of *67 to block Caller ID information

  — *For rotary phones*

1167	Prevents use of 1167 to block Caller ID information

Programming

(See Figure 2-3 on page 2-23 for the location of special programming buttons such as (System Program) and (Enter) on system phones.)

To create a list of Disallowed Phone Numbers:

1. Press (Feature) (0) (0) (System Program) (System Program) (#) (4) (0) (4) at extension 10 or 11.
2. At the `List Number:` prompt, enter a list number (1–8). For example, to select the first list, press (1).
3. At the `Entry:` prompt, select a list entry (01–10).
4. At the `Data- - - - - - - - - - - -` prompt, enter the first telephone number.
5. **To save the telephone number in memory,** you must press (Enter).
6. At this point:
   - To add other phone numbers to this list, press (Next Item) to select a different list entry and repeat Steps 4 and 5.
   - To change the phone number you just entered, press (Remove) and repeat Steps 4 and 5.
   - To delete the phone number you just entered, press (Remove).
   - To create another list, press (Next Procedure) or (Prev Procedure) and repeat from Step 2.
7. Select another procedure using (Next Procedure) or (Prev Procedure) or exit programming mode.

Display

Description

PARTNER-model display phones have a 2-line, 24-character (per line) adjustable display area for calling and programming feedback. Specifically, the display shows:

- Current date (excluding year), day, and time when the phone is idle
- Account code, as it is entered
- Number dialed when making a call
- Duration of call (call timer)
- Number (and name if programmed) of the extension calling when receiving an intercom call or transferred call
- Number (and name if programmed) of the extension returning a transferred call when no one answers at the destination extension
- Automated Attendant, Voice Messaging System, or Direct Extension Dial when a call is transferred from an auto attendant, a voice messaging system, or the Direct Extension Dial feature, respectively. Transfer from Auto Att or Transfer from VMS, or Transfer from Direct Extension Dial if a call is returning to your extension after an unsuccessful transfer by an auto attendant, a voice messaging system or the Direct Dial Extension feature, respectively.
- Caller ID number (or name) of calling party, if applicable
- Coverage Call for XX on the display of users receiving a coverage call (XX represents the number of the extension that activated call coverage)
- `Forward xx xx` on the display of users forwarding their calls (the first xx represents the number of the user's extension; the second xx represents the number of the destination extension).
- `Wake Up Call` on the display of users receiving a wake up call.
- Volume or display contrast level bars, as volume or display contrast is adjusted
- Programming messages and prompts when in programming mode
- When you are in Telephone Programming mode, the current line assignment, feature code, or Speed Dial number (if any) assigned to a button displays when the button is pressed. `Blank` displays if nothing is programmed.
- *At idle extensions 10 and 11 only*, specific messages appear on the top line of the display instead of the usual day/date message in the following circumstances. Users at these two extensions should be instructed to notify the System Manager when such a message appears.

— `ChgBat W/PowerOn` or `ReplaceSysBat W/Power On` appears when PARTNER ACS processor module batteries need to be replaced. The message may flicker on and off as the batteries near the low-power threshold. These batteries are used to retain system programming settings during a power failure. See Chapter 6, "Troubleshooting", for instructions for replacing the batteries.

— Backup-Failure Alarm messages appear if an automatic backup is unsuccessful. The message is displayed until you clear the alarm (or until the next successful automatic backup or system restart). See "Clearing a Backup-Failure Alarm" on page 6-7.

Related Features

- The **System Date (#101), System Day (#102),** and **System Time (#103)** settings are shown as the default display.
- You can use **Display Language (#303)** to identify the language in which messages appear, if the extension has a system display phone.
- Users can assign a name to their extension. Then, when that extension is used to make an intercom call, group call, or transferred call, the name and extension number appear on the system display phone receiving the call. Similarly, users receiving a transfer return call see the name and extension number of the person assigned to the extension that did not answer the transferred call. See **Extension Name Display** for more information.

Considerations

- The call timer records the time a user is active on a call. It begins when the handset is lifted out of the cradle and ends when either the handset is placed back in the cradle or the call is placed on hold. (This is not the call duration reported to SMDR. SMDR records the total time the call is in progress— including the time a call is placed on hold. For more information, refer to "Call Reporting Devices (SMDR)" on page 4-10.) When a call is transferred, the timer restarts when the call is answered.
- The call timer is displayed along with the default display.
- Most messages (other than the default display and Caller ID) display for approximately 15 seconds.
- Marked System Speed Dial numbers do not display when they are dialed.
- The display contrast can be adjusted by pressing ⊛ then using the "up" volume control button to increase the brightness or the "down" volume control button to decrease the brightness. Adjust the contrast while the phone is idle and the handset is in the cradle.
- The angle of the display is adjustable to three positions: low, medium, and high.

Display Language (#303)

Description

This System Programming procedure identifies the language in which display messages appear if the extension has a system display phone. The language is set for each extension, so phones in the same system can display different languages.

Considerations

If SMDR is used, the call report header is printed in the language specified for extension 10.

Valid Entries

1 = English✔
2 = Spanish
3 = French

Programming

(See Figure 2-3 on page 2-23 for the location of special programming buttons such as (System Program) and (Enter) on system phones.)

To change the Display Language setting for an extension:

1. Press (Feature) (0) (0) (System Program) (System Program) (#) (3) (0) (3) at extension 10 or 11.
2. Enter the number of the extension to be programmed. For example, to program extension 11, press (1) (1).
   The current display language displays.
3. To change the display language, press (Next Data) until the appropriate value displays.
4. To change the display language for another extension, press (Next Item) or until the extension number shows on the display. Then repeat Step 3.
5. Select another procedure or exit programming mode.

Distinctive Ring (#308)

Description

This System Programming procedure determines whether calls should ring at a standard device using the system's distinctive ringing patterns—different patterns for outside, intercom, and transferred calls—or whether all calls to the standard device should ring like outside calls.

Considerations

- Change the setting to Not Active if a standard device such as a modem or answering machine does not pick up intercom or transferred calls.
- If distinctive ring is set to Not Active for an extension where both a system phone and a standard device are installed, the system phone continues to use the system's distinctive ringing patterns, but all calls ring at the standard device using a single ring burst.
- The system does not pass distinctive ringing patterns generated by a PBX or central office through to extensions (regardless of the setting for this feature).

Valid Entries

1 =Active (outside, intercom, and transferred calls ring differently, using the system's distinctive ringing patterns) ✔
2 =Not Active (outside, intercom, and transferred calls all ring using a single ring burst)

Programming

(See Figure 2-3 on page 2-23 for the location of special programming buttons such as System Program and Enter on system phones.)

To change the Distinctive Ring setting:

1. Press Feature 0 0 System Program System Program # 3 0 8 at extension 10 or 11.
2. At the Extension: prompt, enter the number of the extension to be programmed. For example, to program extension 22, press 2 2.
3. To activate or deactivate Distinctive Ring for the extension, press Next Data until the appropriate value displays.
4. To program another extension, press Next Item or Prev Item until the extension number shows on the display. Repeat Step 3.
5. Select another procedure or exit programming mode.

Do Not Disturb (F01)

Description

This feature is available only on system phones.

This feature lets a system phone user press a programmed button to prevent incoming calls for the extension from audibly alerting (lights still flash). When Do Not Disturb is on, outside callers hear ringing while inside callers hear a busy signal. This feature is recommended only if someone answers outside calls for your extension when you do not answer them.

Related Features

- **Caller ID** information for incoming calls displays only when a call is audibly alerting at an extension. This means that extensions with Do Not Disturb activated do not receive Caller ID information, unless the call is answered.
- Users with **Automatic VMS Cover (#310)** Assigned or with **VMS Cover** turned on can activate Do Not Disturb to **Send All Calls** immediately to their voice mailbox.
- Users with Call Coverage turned on can activate Do Not Disturb to Send All Calls immediately to the covering extension.

Considerations

- This feature requires a button with lights. When the Do Not Disturb feature is on, the light is also on, indicating that the phone will not ring.
- Use this feature when you do not want the auto attendant or the voice messaging system to transfer calls to you.
- Use this feature if you are assigned to a Hunt Group and you leave your desk, so calls to the Hunt Group will skip your extension and ring immediately at the next available extension in the group.
- To avoid missing calls when this feature is not needed, turn it off.
- If Do Not Disturb is active at a doorphone alert extension, the person at the doorphone hears signaling, but the alert extension is not signaled.
- Unanswered calls that are transferred from an extension with Do Not Disturb active will ring at that extension if they transfer return.

Programming

(See Figure 2-3 on page 2-23 for the location of special programming buttons such as System Program and Enter on system phones.)

To program a Do Not Disturb button:

1. Press (Feature) (0) (0) (System Program) (System Program) (Central Tel Program) at extension 10 or 11.
2. Enter the number of the extension to be programmed with this feature.
3. Press a programmable button with lights.
4. Press (Feature) (0) (1).
5. Program another button for this extension or exit programming mode.

Using

From a system phone, press the programmed button to turn Do Not Disturb on; press it again to turn it off. Use the button like a switch—when the light is on, Do Not Disturb is on.

Doorphone Alert Extensions (#606)

Description

This System Programming procedure identifies extensions that are signaled when a doorphone button is pressed. When a person uses the doorphone, it signals all alert extensions at the same time. If the alert extension is a system phone, the call signals with a unique *ding-dong* sound to distinguish it from other calls. Additionally, if you have two doorphones, they signal with different tones so you can distinguish between them.

Related Features

- You must use **Doorphone Extensions (#604 and #605)** to identify the extensions to which doorphones are connected.
- If **Do Not Disturb** is active at a doorphone alert extension, the person at the doorphone hears signaling, but the alert extension is not signaled.
- If a Contact Closure on the Contact Closure Adjunct controls a door lock, consider assigning the Doorphone Alert Extensions to the **Contact Closure Group (#612**) for that Contact Closure. Only extensions assigned to that Contact Closure Group can activate the door lock.

Considerations

You cannot bridge two doorphones together.

Valid Entries

1 = Not an Alert Extension✔
2 = Doorphone 1 Alert Extension
3 = Doorphone 2 Alert Extension
4 = Doorphones 1 and 2 Alert Extension

Programming

(See Figure 2-3 on page 2-23 for the location of special programming buttons such as System Program and Enter on system phones.)

To identify doorphone alert extensions:

1. Press Feature 0 0 System Program System Program # 6 0 6 at extension 10 or 11.
2. Enter the first alert system extension number. For example, to identify extension 10, press 1 0.

3. To change the alert status, press (Next Data) until the appropriate value displays.
4. To identify another alert extension, press (Next Item) or (Prev Item) until the extension number shows on the display. Then repeat Step 3.
5. Select another procedure or exit programming mode.

Doorphone Extension (#604 and #605)

Description

Each of these System Programming procedures identifies an extension to which a doorphone is connected. A doorphone is usually placed near an entrance, to screen visitors. You can connect up to two doorphones to the system—use **Doorphone 1 Extension (#604)** to identify the extension to which the first doorphone is connected and **Doorphone 2 Extension (#605)** to identify the extension to which the second doorphone is connected.

Related Features

- You must use **Doorphone Alert Extensions (#606)** to identify the extensions that are signaled when the doorphone button is pressed. Each doorphone can signal any number of *alert* extensions.
- To prevent outside calls from being made or received on the doorphone, use **Line Assignment (#301)** to remove all outside lines and/or **Pool Extension Assignment (#314)** to remove all pools from the doorphone extension. **(Automatic Line Selection** for the doorphone extension will be *automatically* set to select intercom lines first.)
- You can use **Message Light On** with the doorphone (for example, to turn on the doorphone's light as a prearranged signal to a delivery person) provided the doorphone is connected to a PARTNER ACS processor module or to an R3.1 206 or later module in a system that is equipped with a PARTNER ACS processor module.
- You can wire a Contact Closure on the Contact Closure Adjunct to activate an electronic lock on the door with the doorphone. Then use **Contact Closure Group (#612)** to assign extensions to control the door lock. Use **Contact Closure Operation Type (#613)** to specify how long the Contact Closure remains active when it is activated. Users in the Contact Closure Group can use the **Contact Closure** dial code to activate the Contact Closure, or they can program the dial code on a button on their phones.

Considerations

- An extension cannot be used for a doorphone and a hotline at the same time. However, hotlines and doorphones can have the same alert extensions.
- You should not assign doorphones to extension 10, 11, or to the first two extensions of any 206 or 308EC modules.
- Remove voice messaging system mailboxes from doorphone extensions.
- You cannot bridge two doorphones together.

Valid Entries

Any extensions except 10, 11, or the first two extensions of any 206 or 308EC modules.
None Assigned✔

Programming

(See Figure 2-3 on page 2-23 for the location of special programming buttons such as System Program and Enter on system phones.)

To program a doorphone extension:

1. Press Feature 0 0 System Program System Program # 6 0 4 for doorphone 1 (or # 6 0 5 for doorphone 2) at extension 10 or 11.
2. Enter the doorphone extension number. For example, to identify extension 20 as a doorphone extension, press 2 0—or press Remove to unassign an existing doorphone extension.
3. Select another procedure or exit programming mode.

Emergency Phone Number List (#406)

Description

This System Programming procedure creates a list of up to 10 telephone numbers that all users can dial regardless of dialing restrictions provided they have access to an outside line. Typical list entries include fire, police, and emergency services numbers.

Related Features

- If an extension is programmed for **Forced Account Code Entry (#307)**, a user at the extension is required to enter an account code before dialing a number in the Emergency Phone Number List.
- The entries you must make to permit or restrict toll calls differ depending on the setting for **Toll Call Prefix (#402)**. This setting tells the system whether a “0” (for operator-assisted calls) or “1” (for direct-dial calls) is required when you make toll calls.

Considerations

- Each telephone number can include up to 12 digits.
- When programming emergency numbers and/or making test calls to emergency numbers, you should: 1) remain on the line and briefly explain to the dispatcher the reason for the call before hanging up, and 2) perform such activities in the off-peak hours, such as early morning or late evening.

Valid Entries

Up to 12 digits (0–9)

Examples

The examples below show how to enter telephone numbers for the Emergency Phone Number List in Step 3 of “Programming.”

- **911.** To allow 911 calls from any extension that has an outside line, create the following entry for the Emergency List:

  911

- **Overriding Number on a Disallowed List.** You can use Emergency List entries to override numbers that would otherwise be disallowed. For example, if you created Disallowed List entries to prevent calls to area code 201, but you want to allow calls to a specific number in that area code (such as the number of a manager who is on call after hours), put the number in the Emergency List:

— *Toll Call Prefix required*

12015556666 and 02015556666

— *Toll Call Prefix not required*

2015556666

Programming

(See Figure 2-3 on page 2-23 for the location of special programming buttons such as s and e on system phones.)

To create an Emergency Phone Number List:

1. Press f 0 0 s s # 4 0 6 at extension 10 or 11.
2. Select a list entry (01–10). For example, to select the third entry, press 0 3. A display similar to the following appears:

```
Emergency List 03
Data - - - - - - - - - - - -
```

3. Enter the telephone number.
4. **To save the telephone number in memory,** you must press e.
5. At this point:
   - To enter other phone numbers, press n to select a different list entry and repeat Steps 3 and 4.
   - To change the phone number you just entered, press r and repeat Steps 3 and 4.
   - To delete the phone number you just entered, press r.
6. Select another procedure or exit programming mode.

Exclusive Hold (F02)

Description

This feature is available only on system phones.

This feature prevents other extensions from picking up outside calls placed on hold at a specific extension with a system phone.

Related Features

You can use the **Hold** button to put calls on regular hold (any extension can pick up the held call).

Considerations

- You can program an Exclusive Hold button on a system phone to use the feature with one touch.
- For system phones, if a call is left on hold for longer than one minute, the extension at which the call is held generates a short Hold Reminder Tone. This tone sounds once every minute until the held call is retrieved, or until the caller hangs up.
- If you put a call on a line or a pool on hold and another user picks up that call, it will no longer be available to you. To ensure that no one else can retrieve your held call on a pooled line, use Exclusive Hold.

Programming

(See Figure 2-3 on page 2-23 for the location of special programming buttons such as s and e on system phones.)

To program an Exclusive Hold button:

1. Press f 0 0 s s c at extension 10 or 11.
2. Enter the extension number to be programmed with this feature.
3. Press a programmable button.
4. Press f 0 2.
5. Program another button for this extension or exit programming mode.

Using

While active on an outside call on a system phone:

1. Press the programmed button or press f 0 2 to put the call on Exclusive Hold.

   The green light next to the line, pool, or i button flutters. At all other extensions, the line appears busy (steady red).

2. To retrieve the call, press the line, pool, or i button on which the call is held and lift the handset or press S.

   You can pick up a call on Exclusive Hold only at the extension *at* which it was put on Exclusive Hold.

Extension Name Display

Description

Users can assign a name to their extension: up to 20 characters long on PARTNER-model phones, up to 12 characters long on MLS-model phones. Then, when that extension is used to make an intercom, group, or transferred call, the name appears on the system display phone receiving the call. Similarly, users receiving a transfer return call see the name of the person assigned to the extension that did not answer the transferred call.

Related Features

Display Language (#303) has no effect on this feature. This means that the extension name displays exactly as it is programmed.

Considerations

- Any extension, regardless of the phone type on that extension, can be programmed with a name through Centralized Telephone Programming. If users want to program their own extension name, they must have a system display phone at their extension.
- Only extension numbers—not names—are printed on SMDR reports.
- You should program Extension Name Display when you first enter Centralized Telephone Programming, before programming any other features. If you want to program both Extension Name Display and Automatic Line Selection (which also must be programmed when you first enter Centralized Telephone Programming), first program Automatic Line Selection, then exit and re-enter Centralized Telephone Programming to program Extension Name Display.

Valid Entries

Up to 20 characters, including letters A–Z, numbers 0–9, and blank spaces. See Table 5-1 for the corresponding codes. Note that only the first 12 characters appear on MLS-model phones.

Programming

Table 5-1. Character Codes

Letters:		Numbers:
A = 21	N = 62	blank = 11
B = 22	O = 63	0 = 00
C = 23	P = 71	1 = 10
D = 31	Q = 72	2 = 20
E = 32	R = 73	3 = 30
F = 33	S = 74	4 = 40
G = 41	T = 81	5 = 50
H = 42	U = 82	6 = 60
I = 43	V = 83	7 = 70
J = 51	W = 91	8 = 80
K = 52	X = 92	9 = 90
L = 53	Y = 93	
M = 61	Z = 94	

(See Figure 2-3 on page 2-23 for the location of special programming buttons such as s and e on system phones.)

To assign a name to an extension:

1. Press f 0 0 s s c at extension 10 or 11.
2. Enter the number of the extension to be programmed. For example, to program extension 12, press 1 2.
3. Press left i. For extension 12, the display reads:

```
12 Enter Extension Name
```

If a name was assigned previously to this extension, that name displays instead.

4. Enter the two-digit code for each character you want to enter. (See Table 5-1 for codes.) For example, to enter the name Andy, press 21 62 31 93. The display reads:

```
12 ANDY
```

5. If you make a mistake, you can press! to clear the display. Repeat Step 4 to enter the correct name.
6. Program a button for this extension or exit programming mode.

External Hotline (#311)

Description

This procedure applies only to standard phones.

This System Programming procedure identifies an external hotline extension. When a user lifts the handset of an external hotline, a predetermined outside number is dialed automatically. The external number might be, for example, a frequently called service bureau. The external hotline must be a standard phone, not a system phone.

After you identify an external hotline extension, you must store the external phone number for the hotline extension as Personal Speed Dial code 80. Both procedures are included in “Programming” on the next page.

Related Features

- Use **Hotline (#603**) to identify an internal hotline extension.
- Use **Line Assignment (#301**) to assign outside lines to the external hotline extension, **Pooled Extension Assignment (#314)** to assign pools to the external hotline extension, and **Automatic Line Selection** to set the extension to select outside lines or pools first.

  If your use of the external hotline requires immediate dialing of the programmed number, dedicate a line for use by this extension (do not assign the line to any other extension or use the line for any other purpose).
- You can set **Line Ringing** to No Ring for all lines or pools assigned to the external hotline to prevent incoming calls from ringing at the extension.
- Make sure there are no call, or line, or pool restrictions assigned to an external hotline because that will prevent the outside number from being dialed. See “Outgoing Call Restriction (#401)” on page 5-198 and “Line Access Restriction (#302)” on page 5-165, and “Pool Access Restriction (#315)— Release 2.0 or Later” on page 5-209.
- Do not use **Station Lock** at an external hotline because it will prevent the outside number from being dialed.
- Remove external hotlines from **Night Service Group Extensions (#504)**, **Calling Group Extensions (#502)**, and **Hunt Group Extensions (#505)**.
- Do not assign **Forced Account Code Entry (#307)** to the external hotline.

Considerations

- Under certain conditions of heavy telephone usage, the external hotline may be unable to dial the programmed number immediately (for example, if many of the standard devices connected to your system dial out at the same time). See “Using” for more information.
- A standard phone without a dialpad is recommended for use as the external hotline.
- You can identify several extensions as external hotlines.
- Do not assign an external hotline to extension 10, 11, or to the first two extensions of any 206 or 308EC modules, which are reserved as power failure extensions.

Valid Entries

Any extensions except for 10, 11, or the first two extensions of any 206 or 308EC modules.

1 = Assigned
2 = Not Assigned4

Programming

(See Figure 2-3 on page 2-23 for the location of special programming buttons such as s and e on system phones.)

To identify an external hotline extension:

1. Press f 0 0 s s # 3 1 1 at extension 10 or 11.
2. At the `Extension:` prompt, enter the external hotline extension number— see “Valid Entries” above. For example, to program extension 30 as the external hotline, press 3 0.
3. To assign or unassign the extension, press D until the appropriate value displays.
4. To program another extension, press n or p until the extension number shows on the display. Repeat Step 3.
5. Select another procedure or exit programming mode.

To program the external hotline phone number as Personal Speed Dial code 80:

1. Press f 0 0 s s c.
2. Dial the extension number of the external hotline.
3. Press f 8 0.
4. Enter the external hotline phone number exactly as you would dial it.

5. Continue programming or exit programming mode.

Using

1. Lift the handset of the external hotline.
   After approximately three seconds, the programmed phone number is dialed automatically.
2. If you do not hear dial tone or dialing noises, hang up for about 20 seconds and try again.
3. When the call is answered, speak into the handset.

Fax Machine Extensions (#601)

Description

This System Programming procedure identifies extensions to which fax machines are connected.

Related Features

- If you want to monitor fax machine status and make one-touch transfers to the fax machine, see "Auto Dialing" on page 5-19 to program a Fax Management button and "Using the Fax Management Feature" on page 4-16 to use the button.
- To prevent other extensions from interrupting a fax call, program the fax extension for **Automatic Extension Privacy (#304)**.

Considerations

- Remove voice messaging system mailboxes from fax machine extensions.
- If an automatic fax call comes in on a line covered by the PARTNER MAIL system, the Automated Attendant Service of that system can be programmed to automatically transfer the call to a fax extension or to the extension Hunt Group for the fax machines (if you have multiple fax machines). See the PARTNER MAIL documentation for instructions.

Valid Entries

1 = Assigned
2 = Not Assigned 4

Programming

(See Figure 2-3 on page 2-23 for the location of special programming buttons such as s and e on system phones.)

To identify a Fax Machine extension:

1. Press f 0 0 s s # 6 0 1 at extension 10 or 11.
2. At the Extension: prompt, enter the extension to which the fax machine is connected. For example, to identify extension 30, press 3 0.
3. To assign or unassign the extension, press D until the appropriate value displays.
4. To program another extension, press n or p until the extension number shows on the display. Repeat Step 3.
5. Select another procedure or exit programming mode.

Forced Account Code Entry (#307)

Description

This feature applies only to system phones.

This System Programming procedure identifies specific extensions at which users must enter an account code prior to making outside calls. The account code can be used to charge telephone calls to a department or client; the account code prints on call reports if you are using SMDR (Station Message Detail Recording) or a call accounting package.

Related Features

- **Account Code Entry** provides instructions on entering *forced* account codes.
- You can use **Forced Account Code List (#409)** to create a list of valid account codes. If a Forced Account Code List exists, the system checks the list whenever a user enters a forced account code. If a forced account code is valid, the system provides access to an outside line. If a forced account code is invalid, the system denies access to an outside line—to dial out, the user must repeat the procedure for entering a forced account code.
- Extensions programmed with this feature are restricted from dialing outside phone numbers on all lines at the extension— *including numbers on the* **Emergency Phone Number List (#406)** —until an account code is entered. If a Forced Account Code List exists, the account code must match an entry on the list for the user to get an outside line.
- Account codes can be entered manually or using **System Speed Dial Numbers**, **Personal Speed Dial Numbers**, and **Auto Dialing** (but not **Marked** System Speed Dial Numbers).
- **Automatic Line Selection** does not apply for an extension programmed with this feature; the user must *manually* select a line or pool after entering an account code.
- Do not assign Forced Account Code Entry to an **External Hotline (#311)** extension.
- If a **System Password (#403)** is required to override dialing restrictions for an extension, users must enter it *before* entering the account code.

Considerations

- If SMDR is used, the account code assigned to incoming or outgoing calls prints on call reports. (See "Call Reporting Devices (SMDR)" on page 4-10 for more information about call reporting.) For forced account code entry, if a Forced Account Code List exists, only valid account codes are printed on the call report.
- Forced account codes are not required to answer incoming calls at the extensions programmed with this feature.

Valid Entries

1 = Assigned
2 = Not Assigned 4

Programming

(See Figure 2-3 on page 2-23 for the location of special programming buttons such as s and e on system phones.)

To program an extension for Forced Account Code Entry:

1. Press f 0 0 s s # 3 0 7 at extension 10 or 11.
2. At the `Extension:` prompt, enter the number of the extension to be programmed. For example, to program extension 15, press 1 5.
3. To assign or unassign Forced Account Code Entry, press D until the appropriate value displays.
4. To program another extension, press n or p until the extension number shows on the display. Then repeat Step 3.
5. Select another procedure or exit programming mode.

Forced Account Code List (#409)

Description

This System Programming procedure lets you identify a list of up to 99 account code verification entries for extensions that are forced to enter account codes. Once a list is created, any user at an extension programmed for Forced Account Code Entry must enter a valid account code—one that matches a list entry—before being allowed to make an outside call. This feature ensures that only authorized users with valid account codes can make outside calls.

Related Features

- An extension must be programmed for **Forced Account Code Entry (#307)** for the Forced Account Code List to have any effect.
- **Account Code Entry** provides instructions for entering *forced* account codes.

Considerations

- If you do not create a Forced Account Code List, the system *does not* verify the account codes dialed at extensions that are required to enter them.
- To validate an account code, the system compares the first six digits of a user-entered account code to the entries on the Forced Account Code List. For a match to be successful, the user must dial at least the account code's associated list entry, even though the user can dial up to 16 digits for an account code. If the system identifies a match, the user can dial an outside number. If no match occurs, the user is denied access to an outside line and must re-enter a valid account code to dial out.
- Each list entry can include up to six digits. You can use the wildcard character (by pressing the h button on a system phone) to match any single digit (it appears as "!" on the telephone display).

Valid Entries

Up to 6 digits including 0–9 and h (any single digit)

Examples

- **Expanded Account Codes.** Users can enter more than the required digits for an account code for tracking purposes. For example, a Customer Service Department's account code is 123. Representatives in the department must dial at least 123 to get an outside line, but can enter additional digits to track a specific customer or item number. For example,

— *The following entries are valid:*

123

123999

— *The following entries are invalid:*

1

12

- **Wildcard Characters.** You can use wildcard characters in list entries. For example, your company's Sales Department has a three digit account code—the first digit represents the department and the second and third digits represent the individuals in the department. You enter 4!! as the list entry.

  — *The following entries are valid:*

  401

  410

  499

  455555

  — *The following entries are invalid:*

  4

  44

Programming

(See Figure 2-3 on page 2-23 for the location of special programming buttons such as s and e on system phones.)

To create a Forced Account Code List:

1. Press f 0 0 s s # 4 0 9 at extension 10 or 11.
2. Select a list entry (01–99). For example, to select the third entry, press 0 3. A display similar to the following appears:

```
Forced Act Code List 03
Data - - - - - - - - - - - -
```

3. Enter up to six digits for the list entry.
4. If the account code is five digits or less, **you must press** e **to save the account code in memory.**
5. At this point:
   - To enter other account codes, press n to select a different list entry and repeat Steps 3 and 4.

- To change the account code you just entered, press r and repeat Steps 3 and 4.
- To delete the account code you just entered, press r.

6. Select another procedure or exit programming mode.

Group Call Distribution (#206)

Description

This System Programming procedure assigns outside lines to Hunt Groups. Doing so allows outside calls to ring directly into a Hunt Group instead of being answered and transferred by the receptionist. You can assign lines to Hunt Groups 1–7. (Hunt Group 7 is used exclusively for the voice messaging system.)

Related Features

- You must use **Hunt Group Extensions (#505)** to assign extensions to Hunt Groups.
- If you assign lines to Hunt Group 7 for the voice messaging system's Automated Attendant Service, you may want to adjust when the lines should ring in the group. See "VMS Hunt Delay (#506)" on page 5-272 and "VMS Hunt Schedule (#507)" on page 5-273 for more information.
- If you are using a voice messaging system, you have two Group Call Distribution options:
  - If you want Automated Attendant Service for some or all lines, Assign (setting 1) those lines to Hunt Group 7.
  - If you want calls to route directly to the voice mailbox of a specific user after four rings, choose VMS Line Cover (setting 3) for those lines *and* assign a line owner in the voice messaging system. For more information about voice messaging system options, refer to the documentation shipped with the voice messaging system.

  As an alternative to the VMS Line Cover setting, you can use **Line Coverage Extension (#208)** with VMS Cover. This provides more flexibility because it lets you specify the number of times calls ring (using **VMS Cover Rings (#117)**) at the user's extension before going to the user's mailbox. In addition, if the user's extension has **Do Not Disturb** on, calls on the line can go immediately to coverage.

Considerations

- Each outside line can be assigned to only one Hunt Group.
- If a Hunt Group that has outside lines assigned receives an outside call and all members of that Hunt Group are busy (or have Do Not Disturb on), the caller hears ringing, which continues until the call is answered.

Examples

Here are some useful applications for Group Call Distribution:

- Place the extensions of employees who work in a department in a Hunt Group and assign one or more outside lines to the group. Doing so lets outside callers ring the group directly without having to be transferred by the receptionist. For example, a mail-order company assigns the extensions of its sales representatives to a Hunt Group and assigns a line to the group. The company then publishes the number as its customer service number, so that a caller can reach a sales representative directly to place an order.
- If you install a voice messaging system, assign the system extensions associated with the voice messaging system hardware to Hunt Group 7. Then, use this procedure to assign outside lines to Hunt Group 7 for Automated Attendant Service. Callers hear a greeting and are prompted to enter digits to transfer to a specific extension or group without the assistance of the receptionist.

Valid Entries

1 = Assigned (for hunting to groups 1–6, or to group 7 for the voice messaging system's Automated Attendant Service)
2 = Not Assigned 4
3 = VMS Line Cover (available only for Hunt Group 7)

Programming

(See Figure 2-3 on page 2-23 for the location of special programming buttons such as s and e on system phones.)

To set up lines for Group Call Distribution:

1. Press f 0 0 s s # 2 0 6 at extension 10 or 11.
2. At the `Group:` prompt, enter a group number (1–6; 7 for the voice messaging system). For example, to select group 1, press 1.
3. At the `Line:` prompt, enter the desired line number. For example, to select line 1, press 0 1.
4. To assign or remove a line for groups 1–6, or to assign or remove a line or use VMS Line Cover for group 7, press D until the appropriate value displays.
5. At this point:
   - To program another line, press n or p until the line number shows on the display. Then repeat Step 4.
   - To program another group, press N P, enter a new group number, and repeat Steps 3 and 4.
6. Select another procedure or exit programming mode.

Group Calling—Ring/Page (I7G/I*7G)

Description

This feature lets users ring, page, or transfer calls simultaneously to all of the extensions in any one of four Calling Groups (G is a Calling Group number from 1–4). When paging, the caller hears a beep and begins speaking; the caller's voice is heard on the speakers of all idle system phones in the selected Calling Group. The first extension to answer the call (by picking up the handset or pressing S, or by pressing! to answer a page) is connected to the caller.

Related Features

You must use **Calling Group Extensions (#502)** to assign extensions to a Calling Group.

Extensions assigned to Calling Group 1 can receive **Simultaneous Paging**.

Considerations

- Extensions can be in more than one Calling Group.
- Exclude extensions that connect auxiliary equipment (auto attendants, voice messaging systems, fax machines, internal and external hotline phones, and doorphones) from Calling Groups.
- If some extensions in a Calling Group have standard, MLC-6, or TransTalk 9000-series phones, those extensions are *not signaled* for voice-paged calls to the group (because they do not have built-in speakers).
- If a Calling Group is in use, a user attempting to page that group hears a busy tone.
- If a user leaves the microphone on for hands-free answer on intercom (HFAI), the microphone is turned off when that phone receives a group page; the user must lift the handset or press! to answer the page.
- Calls can be transferred to a Calling Group manually or using a button programmed to ring the Calling Group.
- You can program a Group Calling button on a system phone to ring or page a specified Calling Group or to transfer a call to a Calling Group with one touch.
- When a call is transferred to a Calling Group and the call is not answered, it goes back to the specified **Transfer Return Extension (#306)**. The call must be ringing, not a voice page.

Examples

Here are some useful applications for this feature:

- Group page employees for general announcements; this feature is an inexpensive alternative to a paging system. (Remember to install system phones with built-in speakers—all models except the MLC-6 and TransTalk 9000-series—where you want employees to hear announcements.)
- Put the extensions of people with similar responsibilities in a Calling Group, so when a caller needs to talk with anyone in the group, the receptionist can transfer the call to the group instead of making separate intercom calls.

  For example, a car dealership puts all extensions for the sales staff into Calling Group 1. To let a prospective customer talk to any salesperson, the receptionist simply transfers the call to the group by dialing & 7 1. All phones in the group ring, and the customer is connected to the first salesperson to answer. (Alternatively, the receptionist can page the group through the speakers of their system phones by pressing i * 7 1.)

Programming

(See Figure 2-3 on page 2-23 for the location of special programming buttons such as s and e on system phones.)

To program a Calling Group button:

1. Press f 0 0 s s c at extension 10 or 11.
2. Enter the number of the extension to be programmed with this feature.
3. Press a programmable button.
4. If you want calls to *ring* the group, press left i 7.

   If you want calls to *page* the group, press left i * 7. (Note that buttons programmed for paging a Calling Group cannot be used to transfer a call to that Calling Group.)
5. Dial a Calling Group number (1–4).
6. Program another button for this extension or exit programming mode.

Using

System Phone

To use when programmed on a button:

- To *ring or page* the Calling Group, press the programmed button first, then lift the handset.
  - — If you *ring* the group, all available extensions in the Calling Group ring.

— If you *page* the group, start talking after the beep.
Your voice is heard through the speakers of all system phones that are idle or have Do Not Disturb turned off in the Calling Group. If someone answers the page, you are connected to that person and the rest of the Calling Group no longer hears the page.

- To *transfer* a call to the Calling Group, while on a call, press the button programmed for *ringing* a Calling Group. You can hang up or stay on the line to announce the call.
All available extensions in the Calling Group ring.

To manually ring or page a Calling Group:

1. Lift the handset and press i.
You hear intercom dial tone.
2. To make a *ringing* call, dial 7 and a group number (1–4).

   All available extensions in the Calling Group ring.

   To make a *paging* call, press * 7 and a group number (1–4). After the beep, start talking.
Your voice is heard through the speakers of all system phones that are not busy in the Calling Group. If someone answers the page, you are connected to that person and the rest of the Calling Group no longer hears the page.

To manually transfer a call to a Calling Group:

1. While on a call, press &.
2. Dial 7 and a group number (1–4). You can hang up or stay on the line to announce the call.
All available extensions in the Calling Group ring.

Standard Phone

To ring or page a Calling Group:

1. Lift the handset.
You hear intercom dial tone.
2. To make a *ringing* call, dial 7 and a group number (1–4).
All available extensions in the Calling Group ring.

   To make a *paging* call, press * 7 and a group number (1–4). After the beep, start talking.
Your voice is heard through the speakers of all system phones that are not busy in the Calling Group. If someone answers the page, you are connected to that person and the rest of the Calling Group no longer hears the page.

To transfer a call to a Calling Group:

1. While on a call, press the switchhook down once rapidly.
   You hear intercom dial tone.
2. Dial 7 and a group number (1–4). You can hang up or stay on the line to announce the call.
   All available extensions in the Calling Group ring.

Group Hunting—Ring/Voice Signal (I77G/I*77G)

Description

This feature lets you distribute call volume among extensions in a group, to offload call activity from a single user. When an intercom or transferred call is placed to a Hunt Group (where *G* is a Hunt Group number from 1–7), the system rings or voice signals the first available (non-busy) extension in the group, passing over busy extensions (or those with **Do Not Disturb** on) in a circular hunt. If a ringing call is not answered within three rings, it moves to the next available extension, and so on, until the call is answered or the caller hangs up. For a voice-signaled call, only the first available extension is signaled; if that extension does not answer, the call does not keep hunting. After an extension receives a Hunt Group call, the next call to the Hunt Group will not ring or voice signal that extension first unless all other extensions in the group are busy or do not answer.

The system supports up to seven Hunt Groups; however, Hunt Group 7 is used exclusively for the voice messaging system. For more information, refer to "Voice Messaging Systems" on page 4-27.

Related Features

- You must use **Hunt Group Extensions (#505)** to assign extensions to a Hunt Group.
- Set **Transfer Return Rings (#105)** to four or greater, to ensure that calls continue hunting to other group extensions if the call is not answered.
- Use **Do Not Disturb** if you are assigned to a Hunt Group and you leave your desk, so that a call to your extension moves directly to the next available extension in the group.
- You can use **Group Call Distribution (#206)** to assign outside lines to a Hunt Group. Doing so allows outside calls on those lines to route directly into that Hunt Group instead of being transferred by the receptionist.
- Hunt Group calls are not eligible for **Call Coverage** or **VMS Cover**.
- When using PARTNER MAIL Release 3 or later, a call to a busy Hunt Group can be sent to a Hunt Group mailbox.

Considerations

- Extensions can be in more than one Hunt Group.
- Outside calls can be answered and transferred to a Hunt Group. The voice messaging system and the auto attendant also can transfer calls to a Hunt Group.
- Calls cannot be transferred to a Hunt Group if all extensions in that group are busy.

- If only one extension in a Hunt Group is available and that extension does not answer an incoming call, the call returns to the extension that transferred the call (or to that extension's transfer return extension) after the programmed amount of transfer return rings.
- You can program a Group Hunting button on a system phone to ring or voice signal a Hunt Group with one touch.
- If you have a voice messaging system, you can program Hunt Group 7 (i 7 7 7) on a button to retrieve messages with one touch.

Examples

Here are some useful applications for a Hunt Group:

- Place the extensions of employees who work in a department sharing calls, such as a customer service group, in a Hunt Group so that when a call comes in to the receptionist it can be transferred to the next available extension. This alleviates the problem of one employee receiving most of the calls.
- Place the extensions of employees who work in a department in a Hunt Group and assign one or more outside lines to the group. Doing so lets outside callers ring the group directly without having to be transferred by the receptionist. For example, a mail-order company assigns the extensions of its sales representatives to a Hunt Group and assigns a line to the group. The company then publishes the number as its customer service number, so that a caller can reach a sales representative directly to place an order.

Programming

(See Figure 2-3 on page 2-23 for the location of special programming buttons such as s and e on system phones.)

To program a Hunt Group button:

1. Press f 0 0 s s c at extension 10 or 11.
2. Enter the number of the extension to be programmed with this feature.
3. Press a programmable button.
4. To program the button to *ring* the next available extension in the Hunt Group, press left i 7 7.

   To program the button to *voice signal* the next available extension in a Hunt Group, press left i * 7 7.
5. Dial a Hunt Group number (1–7 for ringing calls; 1–6 for voice-signaled calls).
6. Program another button for this extension or exit programming mode.

Using

System Phone

To use when programmed on a button:

- To *ring* or *voice signal* an extension in the Hunt Group, simply lift the handset or press S and press the programmed button. If you are voice signaling, start talking after the beep.
- To *transfer* a call to an extension in the Hunt Group, while on a call press the programmed button.

To manually ring or voice signal a Hunt Group:

1. Lift the handset and press i.
   You hear intercom dial tone.
2. To make a *ringing* call, dial 7 7 and a group number (1–7).
   The next available extension in the Hunt Group rings. If no one answers within three rings, the call hunts to the next available extension.

   To make a *voice-signaled* call, press * 7 7 and a group number (1–6). After the beep, start talking.
   Your voice is heard through the speaker of the first available system phone that is not busy. If no one answers, the call does not keep hunting.

To manually transfer a call to a Hunt Group:

1. While on a call, press &.
2. Dial 7 7 and a group number (1–7).
   The next available extension in the Hunt Group rings. If no one answers within three rings, the call hunts to the next available extension. However, if Transfer Return Rings is programmed for less than four rings, the call returns to the extension that transferred the call, or to that extension's transfer return extension.

Standard Phone

To ring or voice signal a Hunt Group:

1. Lift the handset.
   You hear intercom dial tone.
2. To make a ringing call, dial7 7 and a group number (1–7).
   The next available extension in the Hunt Group rings. If no one answers within three rings, the call hunts to the next available extension.

   To make a voice-signaled call, press * 7 7 and a group number (1–6). After the beep, start talking.
   Your voice is heard through the speaker of the first available system phone that is not busy. If no one answers, the call does not keep hunting.

To transfer a call to a Hunt Group:

1. While on a call, press the switchhook down once rapidly.
   You hear intercom dial tone.
2. Dial 7 7 and a group number (1–7).
   The next available extension in the Hunt Group rings. If no one answers within three rings, the call hunts to the next available extension. However, if Transfer Return Rings is programmed for less than four rings, the call returns to the extension that transferred the call, or to that extension's transfer return extension.

Group Pickup (I66G)

Description

This feature allows users at any extension in the system to answer any outside, intercom, or transferred call ringing at an extension in a Pickup Group (where G is a Pickup Group number from 1–4). In other words, when a call rings at an extension that is in a Pickup Group, a user at any extension in the system can answer the call, without knowing which extension or line is ringing and without being in the same Pickup Group. The system can have up to four Pickup Groups.

Related Features

You must use **Pickup Group Extensions (#501)** to assign extensions to Pickup Groups.

Considerations

- Extensions can be in more than one Pickup Group.
- You can program a Group Pickup button on a system phone to pick up calls in a Pickup Group with one touch.

Examples

Here are some useful applications for a Pickup Group:

- Put all system extensions in a Pickup Group (except the boss' private extension), so anyone on the system can answer a ringing call (except calls to the boss).
- Put the extensions of people who work near each other and who can hear each other's phones ring, but who don't have each other's lines on their phones, in a Pickup Group.

  For example, a group of typists work in a large room separated by cubicles, and all of their extensions are in Pickup Group 1. When a typist leaves the room and the typist's phone rings, anyone else in the system who can hear the call ring can pick it up simply by dialing the Pickup Group code for that group (i 6 6 1).

Programming

(See Figure 2-3 on page 2-23 for the location of special programming buttons such as s and e on system phones.)

To program a Pickup Group button:

1. Press f 0 0 s s c at extension 10 or 11.

2. Enter the number of the extension to be programmed with this feature.
3. Press a programmable button.
4. Press left i 6 6.
5. Dial a Pickup Group number (1–4).
6. Program another button for this extension or exit programming mode.

Using

System Phone

To use Group Pickup when programmed on a button, press the programmed button.

To use manually:

1. Lift the handset and press i.
   You hear intercom dial tone.
2. Dial 6 6 and a group number (1–4) to pick up a call ringing at any extension in the group.

Standard Phone

To use Group Pickup:

1. Lift the handset.
   You hear intercom dial tone.
2. Dial 6 6 and a group number (1–4) to pick up a call ringing at any extension in the group.

Hold

Description

This section explains how to place and retrieve calls on hold, using either the h button on a system phone or the switchhook on a standard phone. (The user can make and receive other calls on another line or pool while a call is on hold.)

Related Features

- System phone users can use **Exclusive Hold** to put calls on hold that can be retrieved only from their own extension. (Placing a call on Exclusive Hold also prevents other users from accessing Caller ID information for the held call.)
- If you put a call on a line in a pool on hold and another user picks up that call, it will no longer be available to you. To ensure that no on else can retrieve your held call on a pooled line, use **Exclusive Hold**.
- Use **Call Park** to put a call on a special type of hold so it can be picked up from any phone in the system. This type of hold typically is used for pooled extensions in Hybrid mode, because it allows the user to retrieve a call without having to know which line the call is on.
- Callers on hold hear **Music On Hold (#602)** only if it is active and an audio source is connected to the processor module.
- Standard phone users can put a call on hold to retrieve a second call provided **Call Waiting (#316)** is programmed for their extensions.

Considerations

- For system phones, if a call is left on hold for longer than one minute, the extension at which the call is held generates a short Hold Reminder Tone. This tone sounds once every minute until the held call is retrieved or until the caller hangs up.
- Only one party on an intercom call can put the call on hold. If both parties try to put the call on hold, the call is disconnected.
- If you are using the system behind a PBX or Centrex system, the PBX or Centrex system may include a call hold feature that lets you place a call on hold and place another call on the same line. For more information, see the documentation for your PBX or Centrex system. (When your Centrex or PBX documentation tells you to use a switchhook flash, use the **Recall** feature instead.)
- Hold acts differently on feature phones (standard phones with feature buttons). When you press a Hold button on a feature phone, the call is held at the phone itself. This means other phones in the system cannot see that the call is on hold (it appears as a busy line). Also, callers on hold at a feature phone will not hear the system's music-on-hold.

Using

System Phone

To put a call on hold, press h.
The green light next to the i*, line, or pool winks.*

To retrieve a call that you put on hold:

1. Press the i, line, or pool button next to the winking green light.
2. If the handset is in the cradle, lift it up or press S.
   You are reconnected to the held call. The green light next to the line or intercom button changes to on steady.

To retrieve a call that a person at another extension put on hold, press the button next to the winking red light (or press i 6 8 and the two-digit line number).

Standard Phone

To put a call on hold, press the switchhook down once rapidly.
You hear intercom dial tone. The call is on hold. (Do not hang up the handset while the call is on hold. If you hang up the handset, the phone rings. Lifting the handset reconnects you to the held call.)

To retrieve a call that you put on hold:

1. Hang up.
   The call "rings back."
2. Lift the handset.
   You are reconnected to the held call.

To retrieve a call that a person at another extension put on hold:

1. Lift the handset.
2. At the intercom dial tone, dial 6 8 and the two-digit line number.

To answer a call when you are already on a call (you hear a call-waiting tone—two beeps):

1. Press the switchhook.
   The first call is put on hold and you are connected to the new call.
2. To return to the first call, press the switchhook again.
3. You can continue to press the switchhook to move between the two calls.

Hold Disconnect Time (#203)

Description

This System Programming procedure lets you change the hold disconnect time for an outside line. When a caller on hold hangs up, the local telephone company may send a special signal to the system to free the line. Different telephone companies use different length signals. The length of the signal is called the hold disconnect time. If you put a call on hold and the caller hangs up, but the call does not disconnect within a minute after the caller hangs up, the hold disconnect time is probably set too high, or set at No Detection.

Considerations

- If the telephone company does not send a signal, keep the hold disconnect time set to 450 msec, the default setting. The user must disconnect a held call manually by retrieving the call then hanging it up.
- Shorten the hold disconnect time only if abandoned calls on hold do not disconnect.
- Lengthen the hold disconnect time only if calls are being disconnected prematurely.

Valid Entries

00 = No Detection
01 = 50 msec
02 = 100 msec
03 = 150 msec
04 = 200 msec
05 = 250 msec
06 = 300 msec
07 = 350 msec
08 = 400 msec
09 = 450 msec 4
10 = 500 msec
11 = 550 msec
12 = 600 msec

Programming

(See Figure 2-3 on page 2-23 for the location of special programming buttons such as s and e on system phones.)

To change the hold disconnect time:

1. Press f 0 0 s s # 2 0 3 at extension 10 or 11.
2. At the `Line:` prompt, enter the two-digit number of the line for which you are adjusting the hold disconnect time.For example, to adjust line 1, press 0 1.
   The current hold disconnect time for the line number you specified is displayed. For example, if line 1 is set to the default setting, 09 – 450 msec shows in the display.
3. To change the hold disconnect time, press D until the appropriate value displays.
4. To program the next line, press n, then repeat Step 3.
5. Repeat Step 4 for each line in the system.
6. Select another procedure or exit programming mode.

Hotline (#603)

Description

This System Programming procedure identifies an internal hotline extension and its alert extension. When a user lifts the handset of the hotline phone, the alert extension rings. You can set up several hotline and alert extension pairs. The alert extension can be the same or different for multiple hotline extensions.

We recommend using a standard phone as the hotline phone since this feature makes use only of the phone's intercom. The alert extension can be any type of phone; or it can be the loudspeaker paging system so the hotline phone can be used to make announcements over the loudspeaker.

Related Features

- To prevent outside calls from being made or received on the hotline phone, use **Line Assignment (#301)** to remove all outside lines or **Pool Extension Assignment (#314)** to remove all pools from the hotline extension.
- Set **Automatic Line Selection** for the hotline extension to intercom only.
- Remove hotline extensions from **Night Service Group Extensions (#504)**, **Calling Group Extensions (#502)**, and **Hunt Group Extensions (#505)**.
- Use **External Hotline (#311)** to identify an extension that automatically dials a programmed outside number when a user lifts the handset.

Considerations

- The same extension cannot be assigned as both a hotline and a doorphone. Assigning a doorphone extension as a hotline extension cancels the doorphone setting.
- You should not assign hotline phones to extension 10, 11 or to the first two extensions of any 206 or 308EC modules, which are reserved as power failure extensions.
- The hotline phone can receive transferred calls (but the user at that extension should not pick up the handset until the phone rings).

Valid Entries

A hotline extension (any extension except extension 10, 11, or the first two extensions of any 206 or 308EC modules)

An alert system extension (any extension or 70 for the loudspeaker paging system)

No hotline or alert extension assigned 4

Example

A supermarket installs a hotline phone at its meat counter. When a customer uses the hotline phone, the butcher's phone rings. Alternatively, if the loudspeaker paging system is programmed as the alert extension, a sales clerk could request a "price check" over the loudspeaker simply by lifting the handset of the hotline phone.

Programming

(See Figure 2-3 on page 2-23 for the location of special programming buttons such as s and e on system phones.)

To identify a hotline extension and its alert extension:

1. Press f 0 0 s s # 6 0 3 at extension 10or 11.
2. At the `Extension:` prompt, enter the hotline extension number—see "Valid Entries" on the previous page. For example, to program extension 33 as the hotline, press 3 3.
3. At the `Data ----------` prompt, enter the alert extension number—see "Valid Entries" on the previous page. For example, to program extension 32 as the alert extension, press 3 2. A display similar to the following appears:

```
Internal Hotline Ext 33
Data 32
```

4. At this point:
   - To change the hotline and alert extension numbers you just entered, repeat Steps 2 and 3.
   - To delete the existing hotline and alert extension numbers, press r.
   - To identify another hotline and alert extension pair, press n or p until the new hotline extension number shows on the display. Then repeat Step 3.
5. Select another procedure or exit programming mode.

Using

To use the hotline phone:

1. Lift the handset of the hotline phone.
   The designated alert extension rings.
2. When the call is answered, speak into the handset.

Hunt Group Extensions (#505)

Description

This System Programming procedure lets you assign any number of extensions to a Hunt Group. The system supports up to seven Hunt Groups; however, Hunt Group 7 is used exclusively for the voice messaging system.

Related Features for Hunt Groups 1–6

- For instructions on ringing or paging extensions in a Hunt Group or transferring calls to a Hunt Group, see **Group Hunting**.
- If a ringing call to the Hunt Group is not answered within three rings, the call moves to the next available extension in the Hunt Group. If users in the Hunt Group leave their desks, they should turn on **Do Not Disturb** at their extensions so calls hunt immediately to the next available extension.
- For instructions on making outside calls ring directly in a Hunt Group, see **Group Call Distribution (#206)**.
- Hunt Group calls are not eligible for **Call Coverage** or **VMS Cover**.
- When using PARTNER MAIL Release 3 or later, a call to a busy Hunt Group can be sent to a Hunt Group mailbox.

Related Features for Hunt Group 7

- This Hunt Group applies only to the voice messaging system. For more information, see **VMS Cover Rings (#117)**, **Group Call Distribution (#206)**, **Line Coverage Extension (#208)**, **Automatic VMS Cover (#310)**, **VMS Hunt Delay (#506), VMS Hunt Schedule (#507)**, **Voice Mailbox Transfer**, and **VMS Cover**.
- After you assign the extensions associated with the voice messaging system hardware to Hunt Group 7, you should set the **Transfer Return Extension (#306)** for those extensions to extension 10 (or another extension with a person who can assist the caller).

Considerations for Hunt Groups 1–6

- Any number of extensions can be assigned to each Hunt Group. In addition, extensions can be in more than one Hunt Group.
- You can include multiple fax machines or answering machines in a Hunt Group.
- If you have a PARTNER MAIL system and multiple fax machines, you can assign the fax machines to a Hunt Group. Then you can program the PARTNER MAIL system so that when an automatic fax call comes in on a

line covered by the PARTNER MAIL's Automated Attendant Service, the PARTNER MAIL system recognizes that it is a fax call and automatically transfers it to the first available fax machine in the group.

Considerations for Hunt Group 7

This Hunt Group is used exclusively for the extensions associated with the voice messaging system hardware. Do not assign any other extensions to this group. A voice messaging system requires special hardware and set up procedures—refer to "Voice Messaging Systems" on page 4-27 and to the documentation shipped with the voice messaging system for more information.

Valid Entries

1 = Assigned to group
2 = Not Assigned to group 4

Programming

(See Figure 2-3 on page 2-23 for the location of special programming buttons such as s and e on system phones.)

To assign extensions to a Hunt Group:

1. Press f 0 0 s s # 5 0 5 at extension 10 or 11.
2. At the Group: prompt, enter a group number (1–7). For example, to select group 1, press 1. A display similar to the following appears:

```
Hunt Group 1
Extension:
```

3. Enter the desired extension number. For example, to select extension 31, press 3 1.
4. To assign or unassign the extension, press D until the appropriate value displays.
5. At this point:
   - To assign or unassign another extension, press n or p until the extension number shows on the display. Repeat Step 4.
   - To program another group, press N P, enter a new group number, and repeat Steps 3 and 4.
6. Select another procedure or exit programming mode.

Intercom Dial Tone (#309)

Description

This System Programming procedure determines the type of dial tone that the system provides at an extension. It may be necessary to change this setting to Machine (outside line) dial tone for an autodialing device, such as a fax or modem, that has trouble making calls. For example, if you have a modem that checks for outside line dial tone before dialing, use this procedure to change from Regular to Machine dial tone.

Considerations

Use this procedure *only* if an autodialing device has trouble making calls.

Valid Entries

1 = Regular dial tone 4
2 = Machine (outside line) dial tone

Programming

(See Figure 2-3 on page 2-23 for the location of special programming buttons such as s and e on system phones.)

To change the Intercom Dial Tone setting for an extension:

1. Press f 0 0 s s # 3 0 9 at extension 10 or 11.
2. At the Extension: prompt, enter the number of the extension to be programmed. For example, to select extension 22, press 2 2.
3. To change the Intercom Dial Tone setting, press D until the appropriate value displays.
4. To program another extension, press n or p until the extension number shows on the display. Then repeat Step 3.
5. Select another procedure or exit programming mode.

Joining Calls

Description

Joining is adding yourself to a call in progress, the same way you do on a home telephone by picking up an extension. (This is different from conferencing, in which the originator “pulls you into” the call.) Up to three system extensions can join a call on an outside line (for a total of one outside and four inside parties).

Related Features

- You can use **Automatic Extension Privacy (#304)** to prevent other extensions from joining calls on a specific extension. This is especially useful for answering machines, fax machines, modems, and credit card scanners, because trying to join one of these devices could interfere with its operation.
- Users can program **Privacy** onto a system phone button to allow or prevent others from joining their calls as needed.
- **Caller ID** information displays if you join a call; however, you cannot join a call at any extension that has **Privacy** activated.
- If a line is not assigned to a user’s extension and access to that line is not restricted for that extension, the user can use **Direct Line Pickup—Active Line** to join a call on that line.
- You can join a call answered by **Automatic System Answer** or **Direct Extension Dial** by pressing the line button and lifting the handset. The message stops playing when you join the call.
- Pooled extension users can add other parties to a call by pressing pool buttons.

Considerations

- You cannot join a call by pressing a pool button.
- You cannot join an intercom call or a conference call at another extension.
- You cannot join a call on an extension that has a voice interrupt on busy call in progress.
- You can join a call that is being answered by the voice messaging system, but only if Automatic Extension Privacy is Not Assigned for the extensions associated with the voice messaging system hardware. If this is the case, when you join the call, the voice messaging system disconnects automatically so you can speak to the caller.
- You cannot put a joined call on hold.
- You can tell when someone has joined a call of yours when the lights next to the line or pool button change to alternately flashing red and green.

- If a system phone joins a call on a standard phone, there is a momentary “break” in the call on the standard phone.

How to Join a Call

System Phone

A steady red light next to a line button indicates a call is in progress at another extension.

To join a call:

- Press the line button next to the steady red light and lift the handset, or
- Lift the handset and press i 6 8 and the two-digit line number.
  The red and green lights alternately flash. You are now joined with the call.

Standard Phone

1. Lift the handset.
   You hear intercom dial tone.
2. Dial 6 8 and the number of the line on which the call is being conducted.

Last Number Redial (F05)

Description

This feature redials the last outside number dialed (maximum 28 digits). It is useful for *immediately* redialing a busy number.

Related Features

- You can use **Save Number Redial** to temporarily save the last number dialed. The difference between Last Number Redial and Save Number Redial is that Save Number Redial allows you to make other outside calls before redialing the saved number.
- **System Speed Dial Numbers** cannot be redialed with this feature.
- A Last Number Redial number can begin with a star code; the system automatically inserts a delay based on the **Star Code Dial Delay (#410)** setting.
- A number dialed automatically using the **Caller ID Call Logging and Dialing** feature can be redialed with this feature.

Considerations

- This feature redials all digits dialed on the last outside call except account codes.
- You can program a Last Number Redial button on a system phone to redial a number with one touch.

Programming

(See Figure 2-3 on page 2-23 for the location of special programming buttons such as s and e on system phones.)

To program a Last Number Redial button:

1. Press f 0 0 s s c at extension 10 or 11.
2. Enter the number of the extension to be programmed with this feature.
3. Press a programmable button.
4. Press f 0 5.
5. Program another button for this extension or exit programming mode.

Using

System Phone

To use Last Number Redial:

1. If you want, lift the handset.
2. Press the programmed button or press f 0 5.
   Digits are displayed on system display phones as they are dialed.

Standard Phone

To use Last Number Redial:

1. Lift the handset.
   You hear intercom dial tone.
2. Press # 0 5.

Line Access Mode (#313) — Release 2.0 or later

Description

This procedure applies only to systems configured for Hybrid mode.

This System Programming procedure identifies individual extensions that are to operate as key extensions even though the system is configured for Hybrid mode. If an extension's Line Access Mode is changed to Key, individual lines can be assigned to specific buttons on that extension's phone regardless of whether they are part of a pool.

Related Features

- When an extension is changed from Pooled to Key, any previously assigned pool buttons are removed from the extension and **Pool Access Restriction (#315)** is set to No Access. Additionally, the extension is programmed with factory settings for **Line Assignment (#301), Line Access Restriction (#302), Automatic Line Selection,** and **Line Ringing.**
- When an extension is changed from Key to Pooled, any previously assigned line buttons are removed from the extension and **Pool Access Restriction (#315)** is set to No Restriction. Additionally, the extension is programmed with factory settings for **Pool Line Assignment (#314), Pool Extension Assignment (#314), Automatic Line Selection,** and **Line Ringing.**

Considerations

- Extension 10 operates as a key extension regardless of how the system is configured. The Line Access Mode for extension 10 cannot be changed.
- Extensions that are programmed as key extensions cannot access pools either by pressing pool buttons or by dialing pool access codes.

Valid Entries

1 = Pooled 4 all extensions except 10
2 = Key 4 extension 10 only

Programming

(See Figure 2-3 on page 2-23 for the location of special programming buttons such ass and e on system phones.)

To change the Line Access Mode setting for a specific extension:

1. Press f 0 0 s s # 3 1 3.
2. Enter the desired extension number. For example, to program extension 18, press 1 8.
3. To change the Line Access Mode, press D until the appropriate value displays.
4. To program another extension, press n or p until the extension number shows on the display. Then repeat Step 3.
5. Repeat Steps 3 and 4 for all extensions that you want to change.
6. Select another procedure or exit programming mode.

Line Access Restriction (#302)

Description

This System Programming procedure restricts an extension from receiving and/or making outside calls on a specific line. For example, you may want a secretary to answer calls on a manager's line, but not to make any outgoing calls on the line; in this case you can assign the manager's line to the secretary's extension and restrict it to In Only.

Related Features

- This procedure is the most extreme way to restrict dialing. For example, an extension with a line set to In Only or No Access cannot select the line to dial out— *even for numbers on the* **Emergency Phone Number List (#406)**. See ''Dialing Restrictions and Permissions'' on page 2-12 for a summary of all dialing restrictions.
- For pooled extensions, use **Pool Access Restriction (#315)** to assign restrictions to all the lines assigned to a specific pool. (Pool Access Restriction overrides Line Access Restriction.) For individual lines on pooled extensions, use Line Access Restriction.
- To prevent an extension from using a line, restrict the line even if it is not assigned to the extension, so it cannot be accessed using **Direct Line Pickup**. If an extension's access to a line is set to No Access or In Only, the extension cannot place calls on that line, either by pressing the line button or by using Direct Line Pickup—Idle Line. Likewise, if the extension's access to a line is set to No Access or Out Only, the extension cannot receive calls on that line that are ringing at other extensions, either by pressing the line button or by using Direct Line Pickup—Active Line.
- When a user has access to an outside line for outgoing calls, dialing restrictions can be customized for the user's extension by using **Outgoing Call Restriction (#401)** and **Disallowed Phone Number Lists (#404)**.
- **Caller ID** information does not display for ringing calls on lines programmed for Out Only or No Access.

Considerations

If a line is assigned to a phone, but is restricted to No Access, the line button lights show calling activity; but the line cannot be used to place or receive calls.

Valid Entries

1 = No Restriction (calls permitted on that line) 4
2 = Out Only (can only make outside calls, not receive them, on that line)
3 = In Only (can only receive calls, not make them, on that line)
4 = No Access (cannot receive or make calls, but can join calls, receive transferred calls, or pick up calls on hold on that line)

Programming

(See Figure 2-3 on page 2-23 for the location of special programming buttons such as s and e on system phones.)

To restrict an extension from making calls on a specific line:

1. Press f 0 0 s s # 3 0 2 at extension 10or 11.
2. At the `Extension:` prompt, enter the extension number to be programmed. For example, to program extension 23, press 2 3.
3. At the `Line:` prompt, enter the line number to be restricted at this extension. For example, to restrict line 2, press 0 2.
   The current restriction displays.
4. To change the line restriction for this extension, press D until the appropriate value displays—see “Valid Entries” on the previous page.
5. At this point:
   - To restrict another line at this extension, press n or p until the line number shows on the display. Repeat Step 4.
   - To restrict another extension, press N P and begin at Step 2.
6. Select another procedure or exit programming mode.

Line Assignment (#301)

Description

This procedure applies to key extensions or to individual lines on pooled extensions.

This System Programming procedure assigns the outside lines that are available at an extension. The default order of line assignment to the buttons on a system phone is from left to right, starting in the bottom left corner (see Figure 5-6 on the next page). To put the lines in a different order, first use this procedure to remove all assigned lines; then assign lines in the desired order.

Related Features

- **Number of Lines (#104)** can be used only during initial system setup to assign a subset of lines to all extensions. You can use Line Assignment to assign additional lines to specific extensions. For example, if five lines were assigned to all extensions using **Number of Lines (#104)** and there are eight lines in the system, use **Line Assignment (#301)** to assign lines 6, 7, and 8 to specific extensions.
- After you finish Line Assignment, you can use **Line Ringing** to identify when each outside line assigned to an extension should start ringing. If you add a line to the system, its factory setting is Immediate Ring.
- You can use **Automatic Line Selection** to determine the order in which the system selects a line for an extension when the user at that extension lifts the handset or turns on the speaker to make a call. If you add a line to the system, it becomes the last line in the selection sequence.
- Remove all outside lines from **Hotline (#603)** and **Doorphone (#604/#605)** extensions to prevent calls from being made or received on them.
- If you want to prevent a user at an extension from accessing a line, make sure you restrict the line for that extension using **Line Access Restriction (#302)** even if the line is not assigned to that extension, so it cannot be accessed using **Direct Line Pickup**. Similarly, if you want to prevent a user at an extension from accessing all the lines in a pool, make sure you restrict the pool for that extension using **Pool Access Restriction (#315)** even if the pool is not assigned to that extension, so it cannot be accessed using the pool access code.
- The user must have access to an outside line in order to dial numbers on the **Emergency Phone Number List (#406)**.

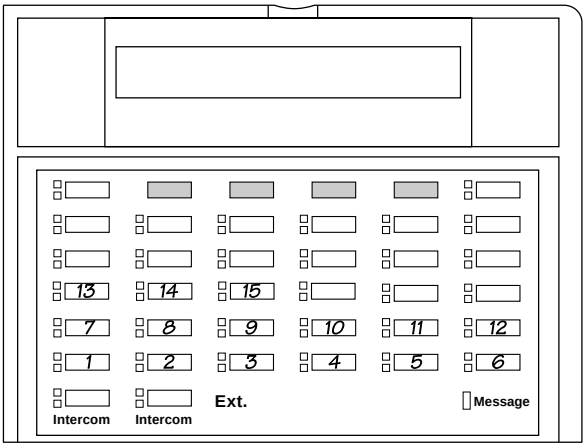

PARTNER-18D/PARTNER -18

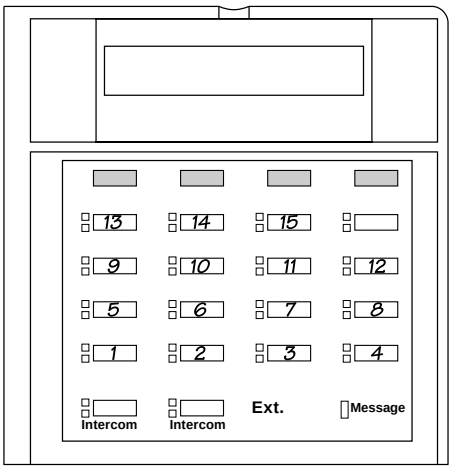

PARTNER-6

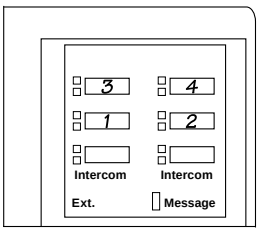

Figure 5-6. Default Line Assignments

Considerations

- You cannot assign a line that belongs to a pool as an individual line on that pooled extension.
- A line must be assigned to a button with lights. If a line is assigned to a button *without* lights, you cannot access that line, nor can you program anything else on the button.
- You can assign multiple lines (up to 19) to a standard phone, but a single-line phone can handle only one call at a time. To make a call, a user lifts the handset and dials 9 at the intercom dial tone; the system selects the first available line based on the **Automatic Line Selection** programmed for the extension. (Alternatively, the user can use **Direct Line Pickup** to access a specific line.)

Valid Entries

1 = Assigned 4
2 = Not Assigned
3 = Select Button (then press a line button to assign the line to that button)

Programming

(See Figure 2-3 on page 2-23 for the location of special programming buttons such as s and e on system phones.))

To assign lines to a specific extension:

1. Press f 0 0 s s # 3 0 1 at extension 10 or 11.
2. Enter the extension number to be programmed. For example, to program extension 15, press 1 5.
   The red light next to each button that has a line assigned is on steady; the red light next to each button that has a pool assigned flashes. To remove all existing line assignments, press r *before selecting a* line.
3. Enter the line number to be assigned. For example, to select line 1, press 0 1.
4. At this point:
   - If you want to assign the line to the first available button with lights, press D until the display reads:

```
Line Assignment 15 L01
1 Assigned
```

   - If you want to remove a line assignment, press D until a display similar to the following appears:

```
Line Assignment 15 L01
2 Not Assigned
```

- If you want to assign the line to a specific button, press 3. A display similar to the following appears:

```
Line Assignment 15 L01
3 Select a Button
```

Then press a button with lights to assign the line to that button. If you use option 3 after a line has been assigned, the line moves from the old button to the new button you select.

5. At this point:
   - To program another line for this extension, press n or p until the line number shows on the display. Then repeat Step 4.
   - To program another extension, press N P and begin at Step 2.
6. Select another procedure or exit programming mode.

Line Coverage Extension (#208)

Description Owner, line

This feature applies only if you have a voice messaging system.

This System Programming procedure identifies an extension as the “owner” of a specific outside line, so the extension can activate Call Coverage or VMS Cover for that line.

Related Features

- An extension’s “owned” line is eligible for coverage only if **Line Ringing** is set to Immediate Ring or Delayed Ring and **Line Access Restriction (#302)** is set to No Restriction or In Only.
- Use **Call Coverage** to redirect an extension’s calls on owned lines to the covering extension.
- Use **Call Coverage Rings (#116)** to specify the number of times a call rings at the owner’s extension before it is sent to the covering extension.
- Use **VMS Cover** or **Automatic VMS Cover (#310)** to redirect the extension’s calls on owned lines to the voice messaging system.
- Use **VMS Cover Rings (#117)** to specify the number of times a call rings at the owner’s extension before it is sent to the voice messaging system.
- Users with **Call Coverage** or **VMS Cover** turned on can **Send All Calls** immediately to their covering extension or their voice mailbox by activating **Do Not Disturb**.

Considerations

- Only one owner can be assigned to a specific line. However, multiple lines can be owned by the same extension.
- This feature provides an alternative method of routing outside calls to the voice messaging system for Call Answer Service.
- This feature has no effect on the CO Line Ownership procedure in PARTNER MAIL or PARTNER MAIL VS.

Valid Entries

System line number
System extension number
No lines owned by an extension 4

Programming

(See Figure 2-3 on page 2-23 for the location of special programming buttons such as s and e on system phones.)

To change the Line Coverage setting for an extension:

1. Press f 0 0 s s # 2 0 8 at extension 10 or 11.
2. Enter the desired line number. For example, to program line 12, press 1 2.
3. Enter the number of the extension to be assigned ownership of the line.
4. At this point:
   - To delete the current setting, press r.
   - To program another line, press n or p until the line number shows on the display. Then repeat Step 3.
5. Select another procedure or exit programming mode.

Line Ringing

Description

This Telephone Programming procedure determines how each outside line or pool assigned to an extension rings. A line or pool can ring immediately, ring with a 20-second delay, or not ring at all. Delayed Ring is useful for backup coverage on shared lines or pools, such as for secretaries who cover each other's lines. No Ring is useful for all extensions except 10 when a receptionist answers all calls, or for phones with no regular users, such as those in conference rooms.

Related Features

- To copy the Line Ringing settings (as well as other system settings) to other extensions, you can use **Copy Settings (#399)**.
- Users automatically receive **Caller ID** information for calls that audibly alert at the extension:
  - For lines or pools set to Immediate Ring, Caller ID information is displayed after the first ring.
  - For lines or pools set to Delayed Ring, Caller ID information is displayed as soon as the call begins audibly alerting.
  - For lines or pools set to No Ring, no Caller ID information is displayed.

  If the phone is idle, users can press the line button to see the Caller ID information.

  If the phone is in use, users can press a button programmed with **Caller ID Inspect** to see the information.

Considerations

- Program this feature from extension 10 or 11 only, using Centralized Telephone Programming. Individual users cannot program this feature.
- System phone users see the light patterns for the lines assigned to their extensions even if Line Ringing is set to Delayed Ring or No Ring. Light patterns do not appear for incoming calls on pool buttons that are set to No Ring.
- If a line at an extension is set to No Ring, a user at that extension has to manually select the line to answer a call.

Valid Entries

Immediate Ring 4 Lines
Delayed Ring
No Ring 4 Pools

Examples

- **Receptionist Call Routing.** If you want calls to be answered by the receptionist first, set the lines at the receptionist's extension to Immediate Ring and the lines at the users' extensions to No Ring.
- **Receptionist Backup.** If you want all calls on a line or in a pool to ring directly at users' extensions—with the receptionist providing backup—set the line or pool at the users' extensions to Immediate Ring. Then set the line on the receptionist's extension to Delayed Ring. An incoming call that is not answered by a user within 20 seconds also rings at the receptionist's extension.

Programming

(See Figure 2-3 on page 2-23 for the location of special programming buttons such as s and e on system phones.)

To change the way outside lines or pools ring at an extension:

1. Press f 0 0 s s c at extension 10 or 11.
2. Enter the number of the extension to be programmed for Line Ringing. *The green lights next to the line or pool buttons show the current Line Ringing settings for all lines or pools assigned to the extension. (If a line or pool is not assigned to a button, the green light next to that button is off.) The following ringing options can be shown by the green light next to the line or pool button:*
   - ***Immediate Ring —*** on steady
   - ***Delayed Ring —*** flashes slowly
   - ***No Ring —*** flutters quickly
3. To change Line Ringing on any line or pool, press the line or pool button until the button light shows the correct setting (the setting for the currently selected line or pool also appears on the display).
4. Continue programming or exit programming mode.

Loudspeaker Paging (I70)

Description

This feature accesses the loudspeaker paging system, if you have one connected to the system through the PAGE jack on the processor module.

Related Features

- Users can make **Simultaneous Paging** announcements over the loudspeaker paging system *and* the idle system phones assigned to Calling Group 1. See **Calling Group Extensions (#502)** to program Calling Group 1.
- You can specify the loudspeaker paging system as a hotline alert extension so that the hotline phone can be used to make announcements over the loudspeaker. For more information, see **Hotline (#603)**.

Considerations

- You can program a Loudspeaker Paging button on a system phone to access the loudspeaker with one touch.
- If the loudspeaker paging system is in use, a user attempting to make an announcement hears a busy tone.

Programming

(See Figure 2-3 on page 2-23 for the location of special programming buttons such as s and e on system phones.)

To program a Loudspeaker Paging button:

1. Press f 0 0 s s c at extension 10 or 11.
2. Enter the number of the extension to be programmed with this feature.
3. Press a programmable button.
4. Press left i 7 0.
5. Program another button for this extension or exit programming mode.

Using

System Phone

To make an announcement over the loudspeaker paging system:

1. Press the programmed button or i 7 0, then lift the handset.

2. Speak into the handset. (To avoid feedback, do not use the speakerphone.)
   Your voice is heard through the loudspeaker paging system.

If your paging system supports announcements to zoned areas, refer to the instructions packaged with the device to make zoned announcements.

Standard Phone

To make an announcement over the loudspeaker paging system:

1. Lift the handset.
   You hear intercom dial tone.
2. Dial 7 0.
3. Speak into the handset.
   Your voice is heard through the loudspeaker paging system.

For touch-tone phones only, if your loudspeaker paging system supports announcements to zoned areas, refer to the instructions packaged with the device to make zoned announcements.

Making Calls

Description

A user can make a call by dialing an outside phone number or an extension number. There are also several ways to *speed dial* a number—see “Related Features” below.

Hybrid Mode Only

- Making calls in Hybrid mode is the same as in Key mode except users can select a pool button rather than a line button to access an outside line. When a user presses a pool button, the system automatically selects an idle line belonging to the pool.
- To access a line in a pool that is not assigned to that extension or to access a line in a pool that the user is already using, system phone users can press i and dial the pool access code. If all lines in a pool are busy, the user hears busy tone.
- Automatic Line Selection can be programmed to change the way the system selects pools when a user lifts the handset to make a call.
- To restrict an extension’s access to all lines assigned to a pool, use **Pool Access Restriction (#315)**. If users are not allowed outgoing access to a pool, they hear a reorder tone after dialing the pool access code at the intercom dial tone.

Related Features

- You can store an outside number, an intercom number, or a feature code on a button, so a user can dial the number with a single touch. For information about programming and using Auto Dial buttons, see **Auto Dialing**.
- You can program outside numbers for one extension or for the entire system, so a user can dial a number by pressing f (or # on a standard phone) plus a two- or three-digit code (80–99 for Personal Speed Dial numbers, 600–699 for System Speed Dial numbers). For more information, see **Personal Speed Dial Numbers** and **System Speed Dial Numbers**.
- If a user lifts the handset before pressing a line or pool button, the system automatically selects the first available outside line or pool, or the intercom. The order in which the system makes the selection is determined by the **Automatic Line Selection** for the extension.
- On either a system phone or a standard phone, users also can use **Direct Line Pickup—Idle Line** to access a line for making an outside call.
- Users can ring or page any of four Calling Groups. For more information, see **Group Calling—Ring/Page**.

- Users can ring any of the seven Hunt Groups or voice signal Hunt Groups 1–6. For more information, see **Group Hunting—Ring/Voice Signal**.
- If Station Lock is used at an extension, users cannot dial outside numbers except **Marked System Speed Dial Numbers** and numbers on the **Emergency Phone Number List (#406)**.
- If dialing restrictions are programmed for an extension, the system may prevent a user at that extension from placing certain calls. For example, a user may not be allowed to dial 900 numbers from the extension. (Or an extension may be programmed to take incoming calls only, so the user cannot dial out at all.) The following features provide dialing restrictions: **Disallowed Phone Number Lists (#404)**, **Line Access Restriction (#302) Pool Access Restriction (#315)**, and **Outgoing Call Restriction (#401)**.
- The following features can be used to override dialing restrictions: **Allowed Phone Number Lists (#407)**, **Emergency Phone Number List (#406)**, **Marked** System Speed Dial Numbers, and **System Password (#403)**.
- Users with system phones can enter account codes to track incoming and outgoing calls. For more information, see **Account Code Entry**. You also can use **Forced Account Code Entry (#307)** to identify extensions that must enter account codes prior to dialing outside phone numbers (including those on the Emergency Phone Number List).
- Users can signal, then speak to, system phone users who are already active on a call to alert them of important business matters, provided **Voice Interrupt On Busy (#312)** is Assigned for the recipient.

Considerations

The following instructions assume that system phones are set (using Automatic Line Selection) to automatically select outside lines first, and standard phones are set to select intercom first. This means that when a user with a system phone lifts the handset, the user hears outside dial tone (if an outside line is available); but when a user with a standard phone lifts the handset, the user hears intercom dial tone.

How to Make an Outside Call

System Phone

1. Lift the handset or press S.
   The green light next to a line or pool button is on steady and you hear the outside dial tone.
2. Dial the phone number.
   On a system display phone, the dialed number appears on the display.

   If you are using a PBX or Centrex line, you also may need to use a dial-out code (usually 9) before you dial a number outside the system.

To make an outside call on a specific line:

1. Press the idle line button (red and green lights are both off) or dial i8 plus the two-digit line number.
2. If desired, lift the handset.
3. Dial the phone number.

To make an outside call using a specific pool:

1. Press the idle pool button (red and green lights are both off) or dial i plus the three-digit pool access code (880, 881, 882, or 883).
2. If desired, lift the handset.
3. Dial the phone number.

To reserve a busy line or pool so your phone beeps when the line or pool becomes free—this is useful when you share a line, such as a WATS line, with other people:

1. Press the busy line or pool button (red light is on steady) without lifting the handset or pressing S.
2. When the line is free and your phone beeps, lift the handset and dial the number. (If more than one person reserves a line, all their phones beep when the line is free. The first person to pick up the phone after the beep gets the line, and the other reservations are canceled.)

Standard Phone

1. Lift the handset.
   You hear intercom dial tone.
2. Dial 9 to get an outside line.
   You hear outside line dial tone.
3. Dial the phone number. (If you are using a PBX or Centrex line, you also may need to use a dial-out code (usually 9) before you dial a number outside the PBX or Centrex system.)

To make an outside call on a specific line:

1. Lift the handset.
   You hear intercom dial tone.
2. Dial 8 plus the two-digit line number.
3. Dial the phone number.

To make an outside call using a specific pool:

1. Lift the handset.
   You hear intercom dial tone.
2. Dial the three-digit pool access code (880, 881, 882, or 883).

3. Dial the phone number.

How to Make an Intercom Call

An intercom call, or inside call, is a call between two extensions without using an outside line. There are two ways you can signal the extension you are calling: by ringing or by voice.

System Phone

You can lift the handset or press S before dialing, then:

1. Press an idle i button (red and green lights are both off).
   You hear intercom dial tone, and the green light next to the i *button is on steady.*
2. To *ring* the extension, dial the two-digit extension number.

   To *voice-signal* a system phone at the extension, press * plus the two-digit extension number and listen for one of the following responses:

   - If you hear *one beep,* you have reached an idle system phone. You can speak after the beep.
     Your voice is heard through the other extension's speaker. If the recipient is present, he or she can reply.
   - If you hear *two beeps,* you have reached a busy system phone with Voice Interrupt On Busy Assigned. You can speak after the beeps. Be aware that the third party to whom the recipient is speaking probably also will hear the two beeps and the faint sound of your voice.Be brief and discreet in your interruption.
     If the recipient has a Voice Interrupt On Busy Talk-Back button, wait for a response.
   - If you hear *ringing,* you have reached an idle standard, MLC-6, or TransTalk 9000-series phone, or a busy system phone with Voice Interrupt On Busy Not Assigned. Your call is not completed until someone answers.

Standard Phone

1. Lift the handset.
   You hear intercom dial tone.
2. To *ring* the extension, dial the two-digit extension number.

   To *voice-signal* a system phone at the extension, press * plus the two-digit extension number and listen for one of the following responses:

   - If you hear *one beep,* you have reached an idle system phone. You can speak after the beep.
     Your voice is heard through the other extension's speaker. If the recipient is present, he or she can reply.

- If you hear *two beeps,* you have reached a busy system phone with Voice Interrupt On Busy Assigned. You can speak after the beeps. Be aware that the third party to whom the recipient is speaking probably also will hear the two beeps and the faint sound of your voice.Be brief and discreet in your interruption.
  If the recipient has a Voice Interrupt On Busy Talk-Back button, wait for a response.
- If you hear *ringing,* you have reached an idle standard, MLC-6, or TransTalk 9000-series phone, or a busy system phone with Voice Interrupt On Busy Not Assigned. Your call is not completed until someone answers.

Manual Signaling (F13XX or F13*XX)

Description

This feature applies only to PARTNER- and MLS-model phones.

This feature lets you program a button on your PARTNER- or MLS-model phone that you can use to signal a predetermined co-worker's extension. It typically is used by a receptionist to alert a user when the user is busy on another call. You can use a Manual Signaling button to beep, ring, or voice signal the user at the target extension.

Related Features

- **Voice Interrupt on Busy (#312)** is an alternative feature that lets a user signal, then speak to, a user who is *active* on a call.
- You can use the Manual Signaling button instead of dialing the two-digit extension number required for these features: **Call Coverage, Call Forwarding/Call Follow-Me**, **Message Light On**, **Message Light Off**, **Station Lock**, and **Voice Mailbox Transfer**.
- To transfer a call to an extension for which you have a Manual Signaling button, press & before pressing the Manual Signaling button. See **Transferring Calls**.

Considerations

- A PARTNER- or MLS-model phone is required at both extensions to use this feature.
- You must program the Manual Signaling feature code and the target extension number on a button. Use a button with lights if you want to view the status of the target extension, similar to an Auto Dial button.
- You can have only one button per extension—either on the system phone *or* on the Intercom Autodialer—for a target extension. The button can be programmed as a Manual Signaling button or as an Auto Dial button. The lights next to the button show calling activity—see "Lights" on page 3-4 for more information.
- If you signal an extension that has an Auto Dial or Manual Signaling button programmed for your extension, the green light next to that button flutters to identify your extension as the signaling extension.
- You can signal the target extension while you are on an outside call. (This does not initiate a one-touch transfer.)
- A Manual Signaling button does not initiate an intercom call unless you lift the handset or press S, press i, and then press the Manual Signaling button.

- To respond to a signal, the target extension must place an intercom call to the person signaling.

Programming

(See Figure 2-3 on page 2-23 for the location of special programming buttons such as s and e on system phones.)

To program a Manual Signaling button:

1. Press f 0 0 s s c at extension 10 or 11.
2. Enter the number of the extension to be programmed with this feature.
3. Press a programmable button.
4. Press f 1 3.
5. Dial the two-digit extension number of the target extension. For example, to identify extension 22 as the target extension, press 2 2. (Enter * before the extension number if you want to use the button for voice signaling.)
6. Program another button for this extension or exit programming mode.

Using

- To beep the target extension:

1. While the handset is in the cradle, press the programmed button.
   The extension beeps for as long as the button is pressed.

- To ring or voice signal the target extension:

1. Lift the handset or press S.
2. Press i.
3. Press the programmed button.

- To transfer a call to the target extension:

1. While active on the call, press &.
2. Press the programmed button.

Message Light Off (F10XX)

Description

This feature turns off the message light at a specified extension (where XX is a system extension number).

Related Features

For instructions for turning on the message light, see "Message Light On (F09XX)".

Considerations

- This feature turns off the message light on system phones and standard phones that have message lights. (See "Standard Telephones" on page 1-15 for a list of standard phones with message lights.)
- For message-waiting capability, standard phones with LED-compatible message-waiting lights must be connected to a PARTNER ACS processor or 308EC module, or to an R3.1 or later 206 module in a system equipped with a PARTNER ACS processor module.
- Do not use this feature for an extension that is covered by the voice messaging system. The voice messaging system automatically turns off the message light at a subscriber's extension when messages in the mailbox have been deleted.

  If a message light is inadvertently turned off at an extension that has a message in the mailbox, the message light is refreshed during the voice messaging system's daily maintenance (3 a.m.).
- If you use the Message Light On feature to signal someone at a doorphone extension, you must use this feature to turn the light off.
- You can program a Message Light Off button on a system phone to turn the message light off at a specific extension with one touch.

Programming

(See Figure 2-3 on page 2-23 for the location of special programming buttons such as s and e on system phones.)

To program a Message Light Off button:

1. Press f 0 0 s s c at extension 10 or 11.
2. Enter the number of the extension to be programmed with this feature.
3. Press a programmable button.
4. Press f 1 0.

5. Optionally, dial the two-digit extension number of your most common destination, or skip to Step 6 if you want only the feature code on the button.
6. Program another button for this extension or exit programming mode.

Using

System Phone

To turn off the message light:

1. Press the programmed button or press f 1 0.
   If you programmed the destination extension number on the button, the message light for the destination extension goes off. Skip Step 2.
2. If no extension number was programmed on the button, dial the extension number of the phone whose message light you want to turn off, or use an Auto Dial button or Manual Signaling button.

Standard Phone

To turn off the message light:

1. Lift the handset.
   You hear intercom dial tone.
2. Press# 1 0.
3. Dial the extension number of the phone whose message light you want to turn off.

Message Light On (F09XX)

Description

This feature turns on the message light at a specified extension (where *XX* is a system extension number).

Related Features

- For instructions on turning off the message light, see "Message Light Off (F10XX)".
- You may be able to use this feature to signal someone at a doorphone extension. See "Doorphone Extension (#604 and #605)" on page 5-120.

Considerations

- This feature turns on the message light on system phones and standard phones that have message lights. (See "Standard Telephones" on page 1-15 for a list of standard phones that have message lights.)
- For message-waiting capability, standard phones with LED-compatible message-waiting lights must be connected to a PARTNER ACS processor or 308EC module, or to an R3.1 or later 206 module in a system equipped with a PARTNER ACS processor module.
- On a standard phone, the message light *flashes* (only when the phone is idle) to indicate that the extension has received a message.
- Do not use this feature for an extension that is covered by the voice messaging system. The voice messaging system automatically turns on the message light at a subscriber's extension when a message is left in the mailbox.
- If you use this feature to signal someone at a doorphone extension, you must use Message Light Off to turn the light off.
- You can program a Message Light On button on a system phone to turn the message light on at a specific extension with one touch.

Programming

(See Figure 2-3 on page 2-23 for the location of special programming buttons such as s and e on system phones.)

To program a Message Light On button:

1. Press f 0 0 s s c at extension 10 or 11.
2. Enter the number of the extension to be programmed with this feature.
3. Press a programmable button.

4. Press f 0 9.
5. Optionally, dial the two-digit extension number of your most common destination, or skip to Step 6 if you want only the feature code on the button.
6. Program another button for this extension or exit programming mode.

Using

System Phone

To turn on the message light:

1. Press the programmed button or press f 0 9.
   If you programmed the destination extension number on the button, the message light for the destination extension goes on. Skip Step 2.
2. If no extension number was programmed on the button, dial the extension number of the phone whose message light you want to turn on, or use an Auto Dial button or Manual Signaling button.

Standard Phone

To turn on the message light:

1. Lift the handset.
   You hear the intercom dial tone.
2. Press # 0 9.
3. Dial the extension number of the phone whose message light you want to turn on.

Music On Hold (#602)

Description

This System Programming procedure activates or deactivates the MUSIC ON HOLD jack on the processor module. The jack must be active and an audio source must be connected to the jack in order to provide recorded music or messages to callers on hold.

Related Features

- You can adjust the volume of Music On Hold using **Music On Hold Volume (#614)**.
- If **Ring on Transfer (#119)** is Not Active and Music On Hold is Active, transferred callers hear music-on-hold until the call is answered.
- If Music On Hold is Active, users with system phones with speakers can play **Background Music** through their phones' speakers.
- If **Automatic System Answer** is on, callers hear music-on-hold while waiting for someone to answer the call.
- If **Direct Extension Dial** is on, callers hear ringing when the call is transferred regardless of the settings for **Music On Hold (#602)** and **Ring on Transfer (#119)**.
- If the receptionist at extension 10 uses the **Wake Up Service Button (#115)** to schedule wake up calls, the recipients hear music-on-hold when they answer their wake up calls.

Considerations

- If Music On Hold is Not Active or if no audio source is connected, callers on hold hear silence.
- The audio source must be connected to the control unit using an RCA phono plug. The MUSIC ON HOLD input jack accepts a maximum input of 2 Volts at 50 Kohms. For more information, see the *PARTNER Advanced Communications System Installation* guide.
- If the audio source develops trouble (such as a bad tape), you can quickly turn it off by changing the Music On Hold setting to Not Active until you are able to solve the problem.
- The performance of music over telephone lines is a public performance under United States Copyright law. Accordingly, in order for the performance of that music to be lawful, it must be licensed annually to the user by the copyright owners or their representatives.

  The Magic on Hold system, available from Lucent Technologies, includes the required license for the first year. This license must be renewed annually.

Valid Entries

1 = Active 4
2 = Not Active

Programming

(See Figure 2-3 on page 2-23 for the location of special programming buttons such as s and e on system phones.)

To change the setting of the MUSIC ON HOLD jack:

1. Press f 0 0 s s # 6 0 2 at extension 10 or 11.
2. To activate or deactivate the MUSIC ON HOLD jack, press D until the appropriate value displays.
3. Select another procedure or exit programming mode.

Music On Hold Volume (#614)

Description

This System Programming procedure allows you to select one of seven volume settings for the external music source provided through the MUSIC ON HOLD jack on the PARTNER ACS processor module. This setting is system-wide.

Related Features

Music On Hold (#602) activates or deactivates the MUSIC ON HOLD jack on the processor module.

Considerations

Changes to the Music On Hold Volume setting will have immediate effect on all calls currently receiving Music On Hold treatment.

Valid Entries

1	–	■	+ (lowest volume)
2	–	■■	+
3	–	■■■	+
4	–	■■■■	+✔
5	–	■■■■■	+
6	–	■■■■■■	+
7	–	■■■■■■■	+ (highest volume)

Figure 5-7.

Programming

(See Figure 2-3 on page 2-23 for the location of special programming buttons such as s and e on system phones.)

To change the Music On Hold Volume setting:

1. Press f 0 0 s s # 6 1 4 at extension 10 or 11.
   The display shows the current setting.
2. To change the setting, press the number of the setting on the dialpad, or press D or d until the correct setting is displayed.
3. If you want to return the volume to the default setting, press r.

Night Service Button (#503)

Description

This System Programming procedure identifies a button on the system phone at extension 10 to be used to turn Night Service on and off. When Night Service is on, all lines and pools assigned to the phones of the users in the Night Service Group ring immediately, regardless of their normal Line Ringing settings.

Night Service is useful if you want phones to ring after regular business hours. For example, although Shipping Department workers do not answer calls directly during the day, you want them to answer incoming calls after hours.

Related Features

- Night Service affects only the extensions identified using **Night Service Group Extensions (#504)**.
- If you program a **System Password (#403)**, the password must be entered when turning Night Service on or off. In addition, when Night Service is on, users in the Night Service Group can dial only numbers on the **Emergency Phone Number List (#406)** and **Marked** System Speed Dial Numbers without entering the System Password. Night Service with a System Password is useful for controlling unauthorized use of phones after hours.
- If you have a voice messaging system, **VMS Hunt Schedule (#507)** determines when outside calls should ring the VMS Hunt Group (always, day only, or night only). The status of the Night Service button at extension 10 tells the voice messaging system to operate in day or night mode.
- The Night Service button returns to the status (on/off) it was in immediately prior to a power failure or to **System Reset (#728)** being used.

Considerations

- A Night Service button must be programmed on the system phone at extension 10.
- Night Service must be programmed on a button with lights. This feature does not work if it is programmed on a button without lights.
- A user in the Night Service Group can receive an after-hours outside call only if it comes in on a line or pool that is assigned to that user's phone. Line or pool assignments for extensions in the Night Service group can vary from one extension to another.
- Dialing restrictions for extensions not in the Night Service Group remain the same as during normal daytime operation.
- If you reassign the Night Service button, it is removed from the button where it was previously assigned.

Valid Entries

1 = Assigned to next available button at extension 10
2 = Not Assigned 4
3 = Select Button (then press a programmable button to assign Night Service to that button)

Programming

(See Figure 2-3 on page 2-23 for the location of special programming buttons such as s and e on system phones.)

To program a Night Service Button at extension 10:

1. Press f 0 0 s s # 5 0 3 at extension 10 or 11.
2. At this point:
   - If you want to assign Night Service to the first available button, press D until a display similar to the following appears:

```
Night Service Button
1 Assigned - Ext10
```

   - If you want to remove the Night Service button assignment, press D until a display similar to the following appears:

```
Night Service Button
2 Not Assigned
```

   - If you want to assign Night Service to a specific button, press 3. A display similar to the following appears:

```
Night Service Button
3 Select a Button
```

     Then press a programmable button with lights to assign Night Service to that button.
3. Select another procedure or exit programming mode.
4. Label the Night Service button at extension 10.

Using

To turn Night Service on:

1. Press the Night Service button at extension 10.
   - If a System Password is programmed, the green light next to the button flashes; you must continue with Step 2.
   - If no System Password is programmed, the green light is on steady and Night Service is on.

2. Enter the password.
   The green light is on steady. Night Service is on.

To turn Night Service off:

1. Press the Night Service button at extension 10.
   - If a System Password is programmed, the green light next to the button flashes; you must continue with Step 2.
   - If no System Password is programmed, the green light goes out and Night Service is off.
2. Enter the password.
   The green light goes out. Night Service is off.

Night Service Group Extensions (#504)

Description

This System Programming procedure assigns extensions to the Night Service Group. When Night Service is on and a call comes in, all extensions in the Night Service Group ring immediately, regardless of normal Line Ringing settings. Any extensions that would normally ring during the day, will also ring.

Related Features

- You must use **Night Service Button (#503)** to program the button that is used to turn Night Service on and off.
- If you program a **System Password (#403)**, when Night Service is on, users in the Night Service Group can dial only numbers on the **Emergency Phone Number List (#406)** and **Marked System Speed Dial Numbers** without entering the System Password.
- If you have a voice messaging system, lines that are assigned to the user's phones in the Night Service Group are covered by the voice messaging system depending on the status of **VMS Hunt Delay (#506)** and **VMS Hunt Schedule (#507)**.

Considerations

- Do not include extensions connected to certain auxiliary equipment (auto attendants, voice messaging systems, internal or external hotline phones, or doorphones) in the Night Service Group.
- A user in the Night Service Group can receive an after-hours outside call only if it comes in on a line or pool that is assigned to that user's phone. Line or pool assignments for extensions in the Night Service group can vary from one extension to another.

Valid Entries

1 = Assigned to group
2 = Not Assigned to group 4

Programming

(See Figure 2-3 on page 2-23 for the location of special programming buttons such as s and e on system phones.)

1. Press f 0 0 s s # 5 0 4 at extension 10 or 11.
2. Enter the number of the extension to be programmed. For example, to program extension 13, press 1 3.

3. To assign or unassign the extension, press D until the appropriate value displays.
4. To assign or unassign another extension, press n or p until the extension number shows on the display. Repeat Step 3.
5. Select another procedure or exit programming mode.

Number of Lines (#104)

Description

This feature should be used only for initial system setup.

This System Programming procedure determines in Key mode the number of outside lines that are automatically assigned to all system extensions; in Hybrid mode, it determines the number of lines assigned to the main pool. (This number does not have to match the actual number of lines connected at the control unit.) This feature should be used only for initial system setup.

Related Features

In Hybrid mode, do not use this procedure if you add lines to the system after initial setup, because it changes **Pool Line Assignment (#207)**, **Pool Extension Assignment (#314)**, **Pool Access Restriction (#315)**, **Automatic Line Selection**, and **Line Ringing** for existing pools back to factory settings. Additionally, it changes **Line Assignment (#301)**, **Line Access Restriction (#302)**, **Automatic Line Selection,** and **Line Ringing** for individual lines back to factory settings. To change pool assignments without affecting other settings, use **Pool Line Assignment (#207)** and **Pool Extension Assignment (#314)**.

In Key mode, do not use this procedure if you add lines to the system after initial setup, because it changes **Line Assignment (#301)**, **Line Access Restriction (#302)**, **Automatic Line Selection**, and **Line Ringing** for existing lines back to factory settings. To change line assignments without affecting other settings, use **Line Assignment (#301)**.

Considerations

- You can use this feature to tell the system how many lines are actually connected at the control unit. For example, if some line jacks do not have lines connected, use this procedure to indicate the number of jacks that actually have lines connected; otherwise the line numbers associated with empty jacks would be assigned to phones as though there were actually lines connected.
- You can use this procedure to limit the number of lines that are automatically assigned to all extensions. For example, if there are ten lines connected to the control unit, you can use this procedure to set the number of lines to eight, so that only the first eight lines are assigned to all system extensions. You can then use **Line Assignment (#301)** to assign lines 9 and 10 to specific extensions.

Valid Entries

3 lines for the PARTNER ACS processor module and 308EC module, plus 2 lines per 206 or 200 module, plus 4 lines per 400 module [4]

Programming

(See Figure 2-3 on page 2-23 for the location of special programming buttons such as s and e on system phones.)

To assign lines to the system at initial system setup:

1. Press f 0 0 s s # 1 0 4 at extension 10 or 11.
2. Enter two digits for the number of outside lines in the system that you want to assign to all extensions or the main pool. For example, dialing 0 6 means that all extensions are assigned lines 1 through 6 or lines 1 through 6 are assigned to the main pool.
3. Select another procedure or exit programming mode.

Outgoing Call Restriction (#401)

Description

This System Programming procedure identifies the types of outgoing calls that can be made on all lines at an extension. See "Dialing Restrictions and Permissions" on page 2-12 for a summary of calling restrictions.

Related Features

- This restriction also applies to lines that a user has access to with **Direct Line Pickup—Idle Line**.
- To override this feature, users can dial **Marked System Speed Dial Numbers** and numbers from an **Allowed Phone Number List (#407)** and the **Emergency Phone Number List (#406)**. Also, if a **System Password (#403)** is defined, MLS-model system phone users can enter it to override restrictions.
- You can program a button on the system phone at extension 10 to be used to quickly change an extension's Outgoing Call Restriction setting. See "Outgoing Call Restriction Button (#114)" on page 5-200 for information.
- You can use **Line Access Restriction (#302)** to restrict extensions from making or receiving calls on specific lines, **Pool Access Restriction (#315)** to restrict extensions from making or receiving calls on all lines belonging to a specific pool, and **Disallowed Phone Number Lists (#404)** to specify telephone numbers that users cannot dial.
- If you program an extension for **Forced Account Code Entry (#307)**, the user at that extension must enter an Account Code before accessing an outside line. (This feature is not available on standard phones.)
- If **Star Code Dial Delay (#410)** is active, the system checks for allowed and disallowed phone numbers *again* beginning with the first digit after the star code.

Considerations

- While procedures that restrict dialing are very effective, absolute protection against misuse cannot be guaranteed. System phones give you more protection against such misuse than standard phones. Therefore, we strongly recommend that you install system phones where restricting phone use is important.
- If the system is connected to a PBX or Centrex system and a dial-out code (usually 9) is needed to place calls outside the PBX or Centrex system, the control unit may not be able to prevent calls for extensions restricted to Local Only. If dialing restrictions are needed on Centrex lines, use Centrex restrictions instead.

- If you want to restrict the use of star code s, include them in the Disallowed Phone Number Lists.

Valid Entries

1 = No Restriction (can make toll, local, and intercom calls) 4
2 = Inside (intercom) Only
3 = Local (intercom and local) Only

Programming

(See Figure 2-3 on page 2-23 for the location of special programming buttons such as s and e on system phones.)

To identify the types of outgoing calls that can be made on all lines at an extension:

1. Press f 0 0 s s # 4 0 1 at extension 10 or 11.
2. At the Extension: prompt, enter the number of the extension to be programmed. For example, to select extension 30, press 3 0.
3. To change the type of call restriction, press D until the appropriate value displays.
4. To program another extension, press n or p until the extension number shows on the display. Repeat Step 3.
5. Select another procedure or exit programming mode.

Outgoing Call Restriction Button (#114)

Description

This System Programming procedure identifies a button on the system phone at extension 10 to be used to change the current Outgoing Call Restriction setting for an extension.

This button is useful for quickly changing an extension's restriction. For example, after a guest's departure, a hotel manager can change the Outgoing Call Restriction setting of the room phone from No Restriction to Inside Only so outside calls cannot be made from the phone after the guest checks out. Conversely, a receptionist can change the Outgoing Call Restriction setting of a conference room phone from Local Only (which prevents users from making long distance calls) to No Restriction so a client can dial long distance.

Related Features

- Rather than using an Outgoing Call Restriction button, you can use **Outgoing Call Restriction (#401)** to change an extension's Outgoing Call Restriction setting through System Programming if you prefer.
- You must use an Auto Dial button with lights to designate the extension you want to change after you press the Outgoing Call Restriction button. It is recommended that you use an Auto Dial button on the PARTNER-CA48 Intercom Autodialer. However, you can use an intercom Auto Dial button on the system phone at extension 10 provided the button has lights. For information about programming Auto Dial buttons, see "Auto Dialing" on page 5-19.

Considerations

- An Outgoing Call Restriction button must be programmed on the system phone at extension 10.
- Outgoing Call Restriction must be programmed on a button with lights. This feature does not work if it is programmed on a button lights.
- The system considers extension 10 busy while you are using the Outgoing Call Restriction button, and the phone acts as if it is in System Programming mode. You cannot use other features or handle calls at extension 10 until you are through using the feature.
- You cannot use the Outgoing Call Restriction button to change an extension's setting while extension 11 is in System Programming mode.

Valid Entries

1 = Assigned to next available button at extension 10
2 = Not Assigned 4
3 = Select button (then press a programmable button with lights to assign Outgoing Call Restriction to that button)

Programming

(See Figure 2-3 on page 2-23 for the location of special programming buttons such as s and e on system phones.)

To program an Outgoing Call Restriction button at extension 10:

1. Press f 0 0 s s # 1 1 4 at extension 10 or 11.
2. At this point:
   - If you want to assign Outgoing Call Restriction to the first available button, press D until a display similar to the following appears:

```
Outgoing CallRstr Button
1 Assigned - Ext10
```

   - If you want to remove the Outgoing Call Restriction button assignment, press D until a display similar to the following appears:

```
Outgoing CallRstr Button
2 Not Assigned
```

   - If you want to assign Outgoing Call Restriction to a specific button, press 3. A display similar to the following appears:

```
Outgoing CallRstr Button
3 Select a Button
```

     Then press a programmable button with lights to assign Outgoing Call Restriction to that button.
3. Select another procedure or exit programming mode.
4. Label the Outgoing Call Restriction button at extension 10.

Using

To change an extension's Outgoing Call Restriction setting:

1. Press the Outgoing Call Restriction button at extension 10.
   The green light next to the Outgoing Call Restriction button turns on and extension 10 appears busy to the system.
2. Press the Auto Dial button for the desired extension repeatedly until its lights show the correct setting as follows:
   - ***No Restriction.*** The green light next to the Auto Dial button is on steady.
   - ***Inside Only.*** The red light next to the Auto Dial button is on steady.
   - ***Local Only.*** The green light next to the Auto Dial button flashes.
3. Press the Outgoing Call Restriction button at extension 10 or lift the handset and replace it back in the cradle.
   The green light next to the Outgoing Call Restriction button goes off and extension 10 resumes normal operation.

Outside Conference Denial (#109)

Description

This System Programming procedure determines whether users can include more than one outside party in a conference call.

Related Features

- For instructions on making conference calls, see "Conference Calls" on page 5-81.
- Use **Conference Drop** to drop the last outside party added to the conference.

Considerations

- This feature setting applies to all system users.
- A conference call connects up to five parties (including the conference originator). If outside conference is allowed, you can have up to two outside parties and up to three inside parties. If outside conference is disallowed, you can have one outside party and up to four inside parties.

Valid Entries

1 = Allow conference calls with up to two outside parties 4
2 = Disallow conference calls with two outside parties

Programming

(See Figure 2-3 on page 2-23 for the location of special programming buttons such as s and e on system phones.))

To allow or disallow conferences with two outside parties:

1. Press f 0 0 s s # 1 0 9 at extension 10 or 11.
2. To allow or disallow two outside parties on a conference call, press D until the appropriate value displays.
3. Select another procedure or exit programming mode.

Personal Speed Dial Numbers

Description

This Telephone Programming procedure lets you store up to 20 frequently-dialed numbers for each extension. Personal Speed Dial numbers can be dialed quickly by pressing f (or # at intercom dial tone on a standard phone) and the two-digit code from 80 through 99. The Personal Speed Dial numbers programmed for a particular extension are for use only at that extension.

Related Features

- Personal speed dialing, which lets users dial a number by pressing three buttons, is different from **Auto Dialing**, which lets users dial a number by pressing a single button.
- For instructions on entering special characters (such as Pause) in a number, see "Special Dialing Functions" on page 5-240.
- You can use **System Speed Dial Numbers** to create a list of up to 100 frequently dialed numbers available to all system users.
- You can store account codes as Personal Speed Dial numbers for use with the **Account Code Entry** feature.
- **External Hotline (#311)** uses Personal Speed Dial code 80 for the external hotline telephone number.
- A Personal Speed Dial number can begin with a star code; the system automatically inserts a delay based on the **Star Code Dial Delay (#410)** setting.

Considerations

- If the system is connected to a PBX or Centrex system and a dial-out code (usually 9) is needed to place calls outside the PBX or Centrex system, include the dial-out code in Speed Dial numbers that must dial out of the PBX or Centrex system.
- Personal Speed Dial codes cannot be programmed onto Auto Dial buttons.
- You can dial Personal Speed Dial numbers on a standard phone, but the numbers must be programmed from extension 10 or 11.
- A combined total of 576 outside Auto Dial and Personal Speed Dial numbers can be programmed.

Valid Entries

Any phone number—up to 28 characters consisting of the digits 0–9, *, #, and special dialing functions that you can access by pressing h (Pause),! (Stop), S

(Recall), and & (Touch-Tone Enable)—assigned to codes 80 through 99 No number assigned to any code [4]

Programming

(See Figure 2-3 on page 2-23 for the location of special programming buttons such as s and e on system phones.)

To program Personal Speed Dial numbers:

1. Press f 0 0 s s c at extension 10 or 11.
2. Dial the number of the extension to be programmed with this feature.
3. Select a two-digit code by pressing f and dialing two digits between 80 and 99. For example, to select code 81, press f 8 1.

   If a number is assigned already to the code, the number appears on the display. If no number is assigned to the code, the display reads:

   `Blank`

4. Enter the phone number exactly as you would dial it.
5. At this point:
   - To program another Personal Speed Dial number, start from Step 3.
   - To program over an existing number, enter the new number after selecting the two-digit code.
   - To remove a Personal Speed Dial number, enter the number's two-digit code and press! once.
6. Continue programming or exit programming mode.

Using

System Phone

You can lift the handset or press S before dialing:

1. If you want to call on a specific line, press the line button (or press i 8 and the two-digit line number) or if you want to call using a specific pool, press the pool button (or press i and the three-digit pool access code).
2. Press f.
3. Dial the two-digit Personal Speed Dial code (80–99).
   If you did not specify an outside line or pool, the system automatically selects one, turns on the speaker if the handset is in the cradle, and dials the number.
   The number being dialed shows on a display phone.

Standard Phone

You can dial Personal Speed Dial numbers on a standard phone, but the numbers must be programmed from extension 10 or 11. To dial a programmed Personal Speed Dial number:

1. Lift the handset.
   You hear intercom dial tone.
2. Press #.
3. Dial the two-digit Personal Speed Dial code (80–99).
   The system automatically selects an outside line and dials the number.

Pickup Group Extensions (#501)

Description

This System Programming procedure lets you assign extensions to a Pickup Group. When a call rings at an extension in a Pickup Group, a user at any other extension in the system can answer the ringing call by dialing the Pickup Group code. The Pickup Group feature is useful when a user needs to answer calls on lines or pools not assigned to his or her phone. The system supports up to four Pickup Groups.

Related Features

For instructions on answering calls in a Pickup Group, see "Group Pickup (I66G)" on page 5-148.

Considerations

- An extension can be assigned to as many as four different Pickup Groups.
- Extensions where extra alerts (such as a loud bell) are installed can be assigned to a Pickup Group, to enable anyone who hears the alert to answer the call.

Valid Entries

1 = Assigned to group
2 = Not Assigned to group 4

Programming

(See Figure 2-3 on page 2-23 for the location of special programming buttons such as s and e on system phones.)

To assign extensions to a Pickup Group:

1. Press f 0 0 s s # 5 0 1 at extension 10 or 11.
2. At the Group: prompt, enter a group number (1–4). For example, to select group 1, press 1. A display similar to the following appears:

```
Pickup Group 1
Extension:
```

3. Enter the number of the extension to be programmed. For example, to select extension 29, press 2 9.
4. To assign or unassign the extension, press D until the appropriate value displays.

5. At this point:
   - To assign or unassign another extension, press n or p until the extension number shows on the display. Then repeat Step 4.
   - To program another group, press N P and enter a new group number. Then repeat Steps 3 and 4.
6. Select another procedure or exit programming mode.

Pool Access Restriction (#315)— Release 2.0 or Later

Description

This procedure applies only to pooled extensions in Hybrid mode.

This System Programming procedure restricts a pooled extension from receiving and/or making outside calls on all lines belonging to a specific pool. For example, you may want customer service representatives to make calls using the WATS lines that belong to auxiliary pool 881, but not receive incoming calls on the lines in that pool; in this case, you assign pool 881 to the customer service representative's phones and restrict the pool to Out Only.

Related Features

- This procedure is the most extreme way to restrict dialing. For example, an extension set to In Only or No Access for a particular pool cannot select that pool to dial out—even for numbers on the **Emergency Phone Number List (#406)**. See "Dialing Restrictions and Permissions" on page 2-12 for a summary of all dialing restrictions.
- When a user has access to a pool for outgoing calls, you can customize dialing restrictions for the user's extension by using **Outgoing Call Restriction (#401)** and **Disallowed Phone Number Lists (#404)**.
- To restrict a pooled extension from receiving and/or making calls on individual lines, you must use **Line Access Restriction (#302)**.
- You can use **Pool Extension Assignment (#314)** to assign pools to specific extensions.
- You can use **Pool Line Assignment (#207)** to assign lines to or remove lines from pools.
- Caller ID information does not display for ringing calls on lines belonging to a pool programmed for Out Only or for No Access.

Considerations

For extension 10 and any extensions for which **Line Access Mode (#313)** is set to Key, this procedure is automatically set to No Access.

Valid Entries

1 = No Restriction (calls permitted on all lines in that pool) 4
2 = Out Only (can only make outside calls, not receive them, on lines in that pool)
3 = In Only (can only receive calls, not make them, on lines in that pool)
4 = No Access (cannot receive or make calls, but can receive transferred calls on lines in that pool)

Programming

(See Figure 2-3 on page 2-23 for the location of special programming buttons such as s and e on system phones.)

To restrict an extension from making or receiving calls on all the lines in a specific pool:

1. Press f 0 0 s s # 3 1 5.
2. Enter the number of the extension to be programmed. For example, to program extension 23, press 2 3. A display similar to the following appears:

```
Pool Access Rstr 23
Pool:
```

3. Enter the pool number (880, 881, 882, or 883) to be restricted at this extension. For example, to restrict pool 881, press 8 8 1. The current restriction displays.
4. To change the pool restriction for this extension, press D until the appropriate value displays—see “Valid Entries” on the previous page.
5. At this point:

   To restrict another pool at this extension, press n or p until the pool number shows on the display. Then repeat Step 4.

   To restrict another extension, press N or P and begin at Step 2.
6. Select another procedure or exit programming mode.

Pool Extension Assignment (#314) — Release 2.0 or Later

Description

This feature applies only to pooled extensions in Hybrid mode.

This System Programming procedure identifies the pools that are assigned to buttons at a pooled extension. The system uses two buttons to represent the main pool (880) and one for each auxiliary pool (881, 882, 883). Up to five pool buttons can be assigned per extension.

Related Features

- You should use **Pool Line Assignment (#207)** prior to this procedure to assign lines to or remove lines from pools.
- You can use **Line Assignment (#301)** to assign individual outside lines to buttons on a pooled extension.
- Users must have access to an outside line or pool in order to dial numbers on the **Emergency Phone Number List (#406)**.
- You can use **Automatic Line Selection** to change the order in which the system selects lines or pools when the user at that extension lifts the handset or presses S to make a call. Note that auxiliary pools (881, 882, and 883) are not automatically added to an extension's Automatic Line Selection.
- You can use **Line Ringing** to identify when each pool and individual line assigned to an extension should start ringing (the factory setting for pools is No Ring and for lines is Immediate Ring).
- If you want to prevent a user at an extension from accessing all the lines in a pool, you must restrict the extension using **Pool Access Restriction (#315)**.
- If you want to prevent a user at an extension from accessing an individual line, you must use **Line Access Restriction (#302)**.
- Remove pools from **Hotline (#603)** and **Doorphone (#604/#605)** extensions, to prevent calls from being made or received on them.
- You can use **Line Access Mode (#313)** to change an extension from a pooled extension to a key extension.

Considerations

- You cannot assign pool buttons to extension 10 or to any key extension.
- The main pool buttons are always assigned to the two leftmost buttons on the bottom row of a system phone. You cannot use Select Button (Setting 3) for the main pool (880) during Pool Extension Assignment programming.

- If you select Not Assigned (Setting 2) for the main pool (880) during Pool Extension Assignment programming, the main pool is removed from the two leftmost buttons on the bottom row of the system phone at that extension. The buttons are then available for programming lines, auxiliary pools, or system features. If the main pool is ever reassigned to that extension, previous programming will be erased.
- Auxiliary pool buttons will be located next to the main pool buttons unless you select Setting 3 to choose a button location when programming.
- You can assign up to four pools to a standard phone, but a single-line phone can make only one call at a time. To make a call, the user lifts the handset and dials 9; the system selects the first available pool based on the Automatic Line Selection programmed for that extension. Alternatively, the user can dial a pool access code to make a call using a specific pool.

Valid Entries

1 = Assigned 4 Main pool
2 = Not Assigned 4 Auxiliary pool
3 = Select Button (auxiliary pools only), then press a button to assign the auxiliary pool to that button

Programming

(See Figure 2-3 on page 2-23 for the location of special programming buttons such as s and e on system phones.)

To assign pools to a pooled extension:

1. Press f 0 0 s s # 3 1 4.
2. Enter the system extension number to be programmed. For example, to program extension 15, press 1 5.
   There is a steady red light next to each button that has a line assigned and a flashing red light next to each button that has a pool assigned. To remove all existing pool assignments, press r *before selecting a pool.*
3. Enter the desired pool access code (880, 881, 882, or 883). For example, to select pool 881, press 8 8 1.
4. At this point:
   - If you want to assign the pool to the first available button with lights, press D until a display similar to the following appears:

```
Pool Ext Assign 15 P881
1 Assigned
```

   - If you want to remove a pool assignment, press D until a display similar to the following appears:

```
Pool Ext Assign 15 P881
```

```
2 Not Assigned
```

- For auxiliary pools only, if you want to assign the pool to a specific button, press 3. A display similar to the following appears:

```
Pool Ext Assign 15 P881
3 Select a Button
```

Then press a button with lights to assign the auxiliary pool to that button. If you use option 3 after an auxiliary pool has been assigned, the auxiliary pool moves from the old button to the new button you select.

5. At this point:
   - To assign another pool for this extension, press n or p until the pool access code shows on the display. Then repeat Step 4.
   - To program another extension, press N P and begin at Step 2.
6. Select another procedure or exit programming mode.

Pool Line Assignment (#207) —Release 2.0 or Later

Description

This procedure applies only to systems configured for Hybrid mode.

This System Programming procedure assigns lines to or removes lines from the main and auxiliary pools supported for Hybrid mode. You can change line assignments in the main pool (880) or in any of three auxiliary pools (881, 882, or 883).

Related Features

- You can use **Pool Extension Assignment (#314)** to assign pools created with this procedure to specific extensions.
- If you want to prevent a user at an extension from accessing all lines in a specific pool, you must restrict the extension using **Pool Access Restriction (#315)**.
- You can use **Line Access Mode (#313)** to change a pooled extension to a key extension.

Considerations

- You can assign some or all outside lines to a specific pool, but you cannot assign a specific outside line to more than one pool.
- Because users cannot control which line they get when they access a pool, you should group lines with similar purposes (WATS lines, FX lines, lines designated for a particular set of users) together in a unique pool.
- If you have individual lines assigned to a pooled extension and you use this procedure to change pool line assignment, be careful not to press D or d to specify a pool assignment. If you do, the system will remove that line from all extensions that have the line assigned.

Valid Entries

1 = No Pool
2 = Main Pool 880 4 all lines assigned
3 = Pool 881
4 = Pool 882
5 = Pool 883

Programming

(See Figure 2-3 on page 2-23 for the location of special programming buttons such as s and e on system phones.)

To change the assignment of lines to pools:

1. Press f 0 0 s s # 2 0 7.
2. Enter the first line to be programmed. For example, to program line 8, press 0 8.A display similar to the following appears:

```
Lines to Pools L08
2 Pool 880
```

3. Enter the desired value (1–5)—see “Valid Entries” on the previous page.
4. To program another line, press n or p until the line number shows on the display. Then repeat Step 3.
5. Select another procedure or exit programming mode.

Privacy (F07)

Description

This feature is available only on system phones.

This feature lets system phone users press a programmed button to turn Privacy on and off, preventing or allowing other users to join calls at the user's extension as needed.

Related Procedures

- If **Automatic Extension Privacy (#304)** is Assigned for an extension, that extension normally is private. However, if a user sometimes needs to have co-workers join conversations, the user can program a Privacy button to turn Privacy on and off as needed. Once a Privacy button is programmed, the user *must* use the button to turn Privacy on and off even though **Automatic Extension Privacy (#304)** is Assigned. **Automatic Extension Privacy (#304)** is appropriate for use with standard phones.
- Privacy applies to active calls—any user can retrieve a held call unless the call is placed on hold with **Exclusive Hold**.
- If you have **Caller ID**, you can use Privacy at your extension to prevent other users from joining your call and from accessing the Caller ID information displayed for active calls at your extension.

Considerations

- Privacy must be programmed on a button with lights. (Users cannot dial the Privacy code manually, or use a programmed button without lights, to activate this feature.) When Privacy is on, the button light at the extension is also on, indicating that others *cannot* join calls.
- Privacy can be turned on and off at any time, even during a call.
- Users cannot join calls using pool buttons regardless of the Automatic Extension Privacy setting or the state of the Privacy Button.

Programming

(See Figure 2-3 on page 2-23 for the location of special programming buttons such as s and e on system phones.)

To program a Privacy button:

1. Press f 0 0 s s c at extension 10 or 11.
2. Dial the number of the extension to be programmed with this feature.
3. Press a programmable button with lights.

4. Press f 0 7.
5. Program another button for this extension or exit programming mode.

Using

From a system phone, press the programmed button to turn Privacy on; press it again to turn it off. *Use the button like a switch—when the light is on, Privacy is on.*

Recall (F03)

Description

This feature causes the system to send a timed switchhook flash over the telephone line to “recall” a new dial tone or to access a PBX, central office, or Centrex feature, such as Call Waiting.

Related Features

- If users have trouble with Recall, use **Recall Timer Duration (#107)** to adjust the length of the Recall signal. Your local phone company can tell you the correct setting—for most Centrex systems, the correct setting is 800 msec. (or 32).
- You can press S to insert a Recall signal in an Auto Dial or Speed Dial number, provided it is the first character in the stored number. (For examples, see “Special Dialing Functions” on page 5-240.)

Considerations

- Using Recall on an intercom call disconnects the call.
- Whenever your PBX or Centrex documentation tells you to press the switchhook when you are on an outside call, use the Recall feature instead. If you are already on a call, most PBX or Centrex systems require that you press the switchhook to get a new dial tone, then dial a feature access code to access a specific PBX or Centrex service.
  - On a system phone, press a programmed button or press f 0 3 to use Recall.
  - On a standard phone, first press and release the switchhook to get intercom dial tone, then send a Recall signal by pressing # 0 3.
  - On a (standard) feature phone that has a Recall or Flash button, first press the Recall or Flash button to get intercom dial tone, then send a system Recall signal by pressing # 0 3.
- You can program a Recall button on a system phone to send a Recall signal with one touch.

Programming

(See Figure 2-3 on page 2-23 for the location of special programming buttons such as s and e on system phones.)

To program a Recall button:

1. Press f 0 0 s s c at extension 10 or 11.
2. Enter the number of the extension to be programmed with this feature.

3. Press a programmable button.
4. Press f 0 3.
5. Program another button for this extension or exit programming mode.

Using

To access a PBX, central office, or Centrex feature (such as Call Waiting) while active on an outside line:

System Phone

1. Press the programmed button or press f 0 3.
2. Enter the access code for the feature (if required).
3. To return to your original call, press the programmed button or press f 0 3 again.

Standard Phone

1. Press the switchhook (or press the Recall or Flash button on a feature phone that has one).
   You hear intercom dial tone.
2. Press # 0 3.
3. Enter the access code for the feature (if required).
4. To return to your original call, press the switchhook (or press the Recall or Flash button on a feature phone) again.

Recall Timer Duration (#107)

Description

This System Programming procedure lets you change the length of the timed signal, or switchhook flash, generated by the system **Recall** feature (as well as by the Recall option used in **Auto Dial** and **Speed Dial** numbers). Recall sends this timed signal over the phone line to the local telephone company or PBX to which the system is connected. Typically you use the Recall feature to access a PBX, central office, or Centrex feature, such as **Call Waiting**. Your local phone company can tell you the correct setting—for most Centrex systems, the correct setting is 800 msec. (or 32).

Considerations

You should change the factory setting only under two conditions:

- If using the system Recall feature has no effect, lengthen the time.
- If the system is connected to a PBX or Centrex system and Recall drops calls, shorten the time.

Valid Entries

01 through 80 (25 to 2000 msec. in 25 msec. increments)
18 (450 msec.) 4

Programming

(See Figure 2-3 on page 2-23 for the location of special programming buttons such as s and e on system phones.)

To change the duration of the Recall Timer signal:

1. Press f 0 0 s s # 1 0 7 at extension 10 or 11. A display similar to the following appears:

```
Recall Timer Duration
18 450-msec
```

2. Enter a different Recall Timer setting by pressing D or d. For example, to increase the Recall Timer setting to 750 msec., press d until a display similar to the following appears:

```
Recall Timer Duration
30 750-msec
```

   Alternatively, you can enter the setting number directly. For example, to set the Recall timer to 750 msec., press 3 0.

3. Select another procedure or exit programming mode.

4. If you are using Recall to access PBX or Centrex features, test the new Recall Timer setting:
   - If a call is disconnected, shorten the time.
   - If the Recall signal has no effect, lengthen the time.

Restore Programming (#125)

Description

This System Programming procedure enables you to reinstate your system and telephone programming (except the **System Day**, **System Date**, and **System Time**) to the settings saved on a PC Card at the last system backup (manual or automatic). This procedure is useful if your system settings become corrupted, if you make changes and decide you would rather use the former settings, or if you replace your processor module and want to retain the system settings you had on the previous processor module. A successful restore takes about five seconds.

NOTE:
When a restore completes successfully, the Restore Complete message displays for two seconds at idle extensions 10 and 11, and then a **System Reset—Programming Saved (#728)** occurs, *disconnecting any calls in progress*. It is recommended that you warn users before beginning a restore, or do the restore during nonbusiness hours.

Related Features

- **Backup Programming—Automatic (#123**) automatically saves your programmed settings at regular intervals.
- **Backup Programming—Manual (#124)** is a manual procedure that you can perform at any time to back up your system and telephone programming settings.
- **System Reset—Programming Saved (#728)** automatically occurs following a successful restore. The reset disconnects any calls in progress.

Considerations

- If the restore is not successful, the display shows Restore Failed or Restore Failed-Try Again for two seconds. All calls that were in progress are disconnected and all of the system and telephone programming settings revert to the default settings.
- The PC Card in the PC Card slot must be a PARTNER ACS Backup/Restore PC Card, which can be purchased from Lucent Technologies.
- PC Card Slot 2 is recommended for the Backup/Restore PC Card; however, either slot can be used. If the system detects Backup/Restore PC Cards in *both* slots when a restore begins, *the first slot is used and the second is ignored*.

Valid Entries

1 = MAN. *mmddyy* 4 (where *mmddyy* = the month, day, and year)
2 = AUTO. *mmddyy* $&man[v]

Using

(See Figure 2-3 on page 2-23 for the location of special programming buttons such as s and e on system phones.)

To initiate a restore:

1. If you have a Backup/Restore PC Card installed, skip to Step 2. If you do not have a PC Card installed, refer to the "*PARTNER ACS PC Card Installation Instructions*."
2. Press f 0 0 s s # 1 2 5 at extension 10 or 11.
   The top line of the display shows `Sys Set Restore or System Settings Restore.`

   If no PC Card is present in the PARTNER ACS processor module, the error message *Insert Valid Card* is displayed. Install a new PC Card using the "PARTNER ACS PC Card Installation Instructions." Then repeat this procedure from Step 2. ***You must power down the system before removing or inserting a Backup/Restore PC Card.***

   You are prompted to choose the backup file you want to use for the restore. The *bottom line of the display shows* `1 MAN.mmddyy`*, where* `mmddyy` *represents the date of the manual backup on this card.*
3. To change to the file created by an automatic backup, press 2.
   The bottom line of the display shows `2 AUTO.mmddyy`,*where* `mmddyy` *represents the date of the automatic backup on this card.*

   NOTE:
   If the date of the file (AUTO. *mmddyy* or MAN. *mmddyy*) indicates that this is not the file you intended to use, refer to the instruction package with the PC Upgrade card for complete instructions on how to install the Backup/Restore PC Card.

   NOTE:
   If the Backup/Restore PC Card is fresh from the factory, and no backups have been recorded on it yet, the filenames will be `MAN.******` and `AUTO.******`, respectively. You cannot use these files for a restore; they will generate the error message Empty File after you press e in Step 4.

4. Press e to start the restore.

   If the system detects an error before beginning the restore, the bottom line of the display shows one of the following messages:

`Insert Card`	or	`Insert Valid Card`
`Bad File`	or	`Bad File - Try Again`
`Incompat Version`	or	`Incompatible Versions`
`Empty File`		

(See Chapter 6, “Troubleshooting”, for more information about these messages.)

If the system does not detect an error, the restore begins.

When the restore has completed successfully, the bottom line of the display shows `Restore Complete` *for two seconds. Then the system resets itself, which means that all calls in progress are disconnected. You are no longer in System Programming mode.*

If the restore is not successful, the display shows `Restore Failed` *or* `Restore Failed-Try Again` *for two seconds. All calls that were in progress are disconnected and all of the system and telephone programming settings revert to the default settings. You are no longer in System Programming mode. Try the restore again.*

Ring on Transfer (#119)

Description

This System Programming procedure lets you specify what callers hear while they are being transferred. If Ring on Transfer is set to Active, callers hear ringing as they are being transferred; if it is set to Not Active, callers hear silence unless Music On Hold is activated and an audio source is connected to the system. If this is the case, callers hear music while the call is being transferred to the destination extension. Once there, callers hear ringing until the call is answered or it is sent to the voice messaging system.

Related Features

- If you have an audio source connected to the system, set **Music On Hold (#602)** to Active and Ring on Transfer to Not Active, so callers hear music as they are being transferred to the destination extension.
- This procedure has no effect on **Direct Extension Dial** or **Call Park**.

Valid Entries

1 = Active 4
2 = Not Active

Programming

(See Figure 2-3 on page 2-23 for the location of special programming buttons such as s and e on system phones.)

To change Ring on Transfer:

1. Press f 0 0 s s # 1 1 9 at extension 10 or 11.
2. Press D until the appropriate value displays.
3. Select another procedure or exit programming mode.

Rotary Dialing Timeout (#108)

Description

This System Programming procedure changes the length of the Rotary Dialing Timeout. You may need to change the length of the timeout if you have any rotary lines and you are having trouble calling out on standard touch-tone phones. For example, if users dial slowly and calls are not completed or are connected to wrong numbers, lengthen the timeout.

Related Features

Use this procedure only if the **Dial Mode (#201)** for at least one outside line in the system is set to rotary.

Considerations

Do not change this setting unless the system is experiencing problems.

Valid Entries

1 = 4 seconds
2 = 8 seconds 4
3 = 12 seconds

Programming

(See Figure 2-3 on page 2-23 for the location of special programming buttons such as s and e on system phones.)

To change the length of the Rotary Dialing Timeout:

1. Press f 0 0 s s # 1 0 8 at extension 10 or 11.
2. Press D until the appropriate value displays.
3. Select another procedure or exit programming mode.

Save Number Redial (F04)

Description

This feature is available only on system phones.

This feature saves into temporary memory the last outside number (up to 28 digits) dialed from an extension with a system phone. Users can use this feature to save a number before they hang up on a busy or unanswered call. Once saved, the number can be redialed at any time. The number stays in memory until a different one is saved.

Related Features

- Unlike **Last Number Redial**, this feature lets the user make other calls before redialing the saved number.
- **System Speed Dial Numbers** cannot be saved using this feature.
- A Save Number Redial number can begin with a star code; the system automatically inserts a delay based on the **Star Code Dial Delay (#410)** setting.
- When you automatically dial the number displayed in the **Caller ID Call** Logging and Dialing feature, you can save the number using the Save Number Redial feature.

Considerations

- This feature redials all digits dialed on the outside call for which the feature was used, except account codes.
- You can program a Save Number Redial button on a system phone to access the feature with one touch. If you do, you can press the button to save the number and press the button later to redial the number.
- You can program this feature on more than one button to save more than one number.

Programming

(See Figure 2-3 on page 2-23 for the location of special programming buttons such as s and e on system phones.)

1. Press f 0 0 s s c at extension 10 or 11.
2. Enter the number of the extension to be programmed with this feature.
3. Press a programmable button.
4. Press f 0 4.
5. Program another button for this extension or exit programming mode.

Using

To save a number, from a system phone, press the programmed button or press f 0 4 after dialing the number, but before hanging up.

To redial a stored number, press the programmed button again or press f 0 4 again.

Send All Calls

Description

You can use the Call Coverage or VMS Cover with D o Not Disturb buttons to send intercom and transferred calls and outside calls on owned lines immediately to your voice mailbox.

Related Features

- If **Call Coverage** is on and a call that is eligible for coverage begins to ring, you can turn on **Do Not Disturb** to send that call and any subsequent calls immediately to the covering extension. This allows callers to receive coverage without waiting for the number of rings specified with **Call Coverage Rings (#116)**.
- If **VMS Cover** is on and a call that is eligible for coverage begins to ring, you can turn on Do Not Disturb to immediately send that call and subsequent calls to your voice mailbox. This allows callers to leave a message without waiting for the number of rings specified with **VMS Cover Rings (#117)**.
- If **Call Coverage** and **VMS Cover** are both on, you can turn on **Do Not Disturb** to send that coverage call and all subsequent calls immediately to the covering extension. If there is no answer at the covering extension, the calls go to your voice mailbox after the number of rings specified with **VMS Cover Rings (#117)**.
- Use **Line Coverage Extension (#208)** to identify an extension as the owner of a specific outside line.

Using

To send a covered call immediately to the covering extension:

- If Call Coverage is not turned on, while the call is ringing, press the Call Coverage button.
  The ringing call is sent immediately to the covering extension; subsequent calls go to the covering extension after the specified number of Call Coverage Rings.
- If Call Coverage is turned on, press the Do Not Disturb button.
  All Covered calls are sent immediately to the covering extension until you turn off Do Not Disturb.

To send a call immediately to the voice messaging system:

- If VMS Cover is not turned on, while the call is ringing, press the VMS Cover button.
  The ringing call is sent immediately to your voice mailbox; subsequent calls go to your voice mailbox after the specified number of VMS Cover Rings.

- If VMS Cover is already turned on, press the Do Not Disturb button.
  All covered calls are sent immediately to the voice messaging system until you turn off Do Not Disturb.

To send covered calls immediately to coverage when Call Coverage and VMS Cover are both on, press Do Not Disturb.
All calls go to the covering extension. If there is no answer, the calls go to your voice mailbox.

Simultaneous Paging (I*70)

Description

This feature accesses the loudspeaker paging system, if you have one connected to the system through the PAGE jack on the primary processor module, and all of the idle systems phones with speakers assigned to Calling Group 1.

Related Features

- You must use **Calling Group Extensions (#502)** to identify the extensions in Calling Group 1.
- Use **Loudspeaker Paging** to make announcements only over the loudspeaker paging system.

Considerations

- You can program a Simultaneous Paging button on a system phone to access with one touch the loudspeaker paging system and idle system phones with speakers in Calling Group 1.
- If the loudspeaker paging system or Calling Group 1 is in use, a user attempting to make an announcement hears a busy tone.
- If someone answers a loudspeaker page from a system phone in Calling Group 1, the page becomes an intercom call.
- If some extensions in Calling Group 1 have standard, MLC-6, or TransTalk 9000-series phones, those extensions are not included in the simultaneous page (because they do not have built-in speakers).

Programming

(See Figure 2-3 on page 2-23 for the location of special programming buttons such as s and e on system phones.)

To program a Simultaneous Paging button:

1. Press f 0 0 s s c at extension 10 or 11.
2. Enter the number of the extension to be programmed with this feature.
3. Press a programmable button.
4. Press left i * 7 0.
5. Program another button for this extension or exit programming mode.

Using

System Phone

To make an announcement over the loudspeaker paging system and the idle system phones with speakers in Calling Group 1:

1. Press the programmed button or i * 7 0, then lift the handset.
2. Speak into the handset. (To avoid feedback, do not use the speakerphone.)
   Your voice is heard through the loudspeaker paging system and the speakers of all idle system phones in Calling Group 1.

If your loudspeaker paging system supports announcements to zoned areas, refer to the instructions packaged with the device to make zoned announcements.

Standard Phone

To make an announcement over the loudspeaker paging system and the idle system phones with speakers in Calling Group 1:

1. Lift the handset.
   You hear intercom dial tone.
2. Dial * 7 0.
3. Speak into the handset.
   Your voice is heard through the loudspeaker paging system and the speakers of all idle system phones in Calling Group 1.

For touch-tone phones only, if your loudspeaker paging system supports announcements to zoned areas, refer to the instructions packaged with the device to make zoned announcements.

SMDR Output Format (#610)

Description

Call Reporting (often referred to as *Station Message Detail Recording* or *SMDR)* provides detailed tracking of telephone usage in a printed report. This System Programming procedure allows you to specify whether a maximum of 15 digits or 24 digits is printed for dialed numbers in the Number field on the call report. The longer field is useful for businesses, such as law offices and hotels, that need to record many digits for outgoing calls for billing purposes.

Before changing to 24 digits, check the documentation for your call accounting device to verify that 24 digit output is supported.

Related Features

- You can use **SMDR Record Type (#608)** to specify the type of calls to be included on call reports.
- When you change the output format, the length of the Number field is adjusted for the next call record that prints. To print a new header, use **SMDR Top of Page (#609)**.
- If you use **Automatic System Answer** or **Direct Extension Dial**, you may want to set **SMDR Talk Time (#611)** to Active to print on call reports the time a user spends on an incoming outside call—from the time the user answers the call to the time the call is disconnected from the system.

Considerations

- This feature requires special hardware and/or software. For more information, see "Call Reporting Devices (SMDR)" on page 4-10.
- If the output format is set to 15 digits and a "?" prints as the last digit of a dialed number on a call report (indicating that the digits dialed exceed the 15 digits the Number field can hold), you may want to change the output format to 24 digits.
- If the output format is set to 24 digits and **SMDR Talk Time (#611)** is set to Active, the combined length of the fields for a call record will be greater than the 80 characters supported by most printers. If call records wrap around to the next line, reduce the font size or increase the characters-per-inch setting for the printer. If necessary, change the output format back to 15 digits.

Valid Entries

1 = 15 Digits 4
2 = 24 Digits

Programming

(See Figure 2-3 on page 2-23 for the location of special programming buttons such as s and e on system phones.)

To change the maximum number of digits for dialed numbers that can print on call reports:

1. Press f 0 0 s s # 6 1 0 at extension 10 or 11.
2. Press D until the appropriate value displays.
3. Select another procedure or exit programming mode.

SMDR Record Type (#608)

Description

Call Reporting (often referred to as *Station Message Detail Recording* or *SMDR)* provides detailed tracking of telephone usage in a printed report. This System Programming procedure allows you to specify whether all calls or outgoing calls only are to be included on call reports.

Related Features

- The date and time that appear on call reports are determined by **System Date (#101)** and **System Time (#103)**.
- The call report page header prints in the **Display Language (#303)** specified for extension 10.
- If **Account Code Entry** (optional or forced) is used to enter an account code for a call (for example, to charge calls to specific departments or projects), the account code prints on the call report. If there are entries in the **Forced Account Code List (#409)**, only valid account codes and any other entered digits up to 16 print on the call report.
- **Marked** System Speed Dial Numbers appear on the call report as F *nnn*, where *nnn* is the Speed Dial code.
- If you use **Automatic System Answer** or **Direct Extension Dial**, you may want to set **SMDR Talk Time (#611**) to Active to print on call reports the time a user spends on an incoming outside call—from the time the user answers the call to the time the call is disconnected from the system.
- You can use **SMDR Output Format (#610)** to identify whether a maximum of 15 or 24 digits is printed for dialed numbers on the call report.
- For instructions on notifying the system that the printer has been aligned to the top of a new page, see "SMDR Top of Page (#609)" on page 5-239.
- If you use **Caller ID**, SMDR reports include the telephone numbers of incoming calls.

Considerations

This feature requires special hardware and/or software. For more information, see "Call Reporting Devices (SMDR)" on page 4-10.

Valid Entries

1 = All Calls (outgoing and incoming) 4
2 = Outgoing Only

Programming

(See Figure 2-3 on page 2-23 for the location of special programming buttons such as s and e on system phones.)

To identify the type of calls to include for call reporting:

1. Press f 0 0 s s # 6 0 8 at extension 10 or 11.
2. Press D until the appropriate value displays.
3. Select another procedure or exit programming mode.

SMDR Talk Time (#611) —Release 2.0 or Later

Description

Call reporting (often referred to as M *Station Message Detail Recording* or *SMDR)* provides detailed tracking of telephone usage in a printed report. This System Programming procedure allows you to indicate whether or not you want to include a Talk field on call reports. The Talk field records talk time for all incoming outside calls.

For Automatic System Answer and Direct Extension Dial calls, talk time does not include the time during which the greeting plays or the time that the caller spends waiting for someone to answer the call.

For all other calls, talk time is the same as call duration.

Related Features

- Talk time is most helpful for **Automatic System Answer** or **Direct Extension Dial** calls.
- You can use **SMDR Record Type (#608)** to specify the type of calls to be included on call reports.
- You can use **SMDR Output Format (#610)** to identify whether a maximum of 15 digits or 24 digits is printed for dialed numbers on the call report.
- When you change this feature to Active, the next call record that prints includes talk time as the last field on the call report. To print a new header, use **SMDR Top of Page (#609)**.

Considerations

- This feature requires special hardware and/or software. For more information, see "Call Reporting Devices (SMDR)" on page 4-10.
- If talk time is set to Active and SMDR Output Format (#610) is set to 24 digits, the combined length of the fields for call record will be greater than the 80 characters supported by most printers. If call records wrap around to the next line, reduce the font size or increase the characters-per-inch setting for the printer. If necessary, change the output format back to 15 digits.

Valid Entries

1 = Active
2 = Not Active4

Programming

(See Figure 2-3 on page 2-23 for the location of special programming buttons such as s and e on system phones.)

To include the Talk field on call reports:

1. Press f 0 0 s s # 6 1 1.
2. Press D until the appropriate value displays.
3. Select another procedure or exit programming mode.

SMDR Top of Page (#609)

Description

Call Reporting (often referred to as *Station Message Detail Recording* or *SMDR)* provides detailed tracking of telephone usage in a printed report. This System Programming procedure notifies the system that the printer has been aligned to the top of a new page. Use this feature after inserting paper, clearing a jam, or to print a new header after changing SMDR Output Format or SMDR Talk Time. When this feature is used, the system prints a new call report header.

Related Features

- You can use **SMDR Record Type (#608)** to specify the type of calls to be included on call reports.
- You can use **SMDR Output Format (#610)** to identify whether a maximum of 15 or 24 digits is printed for dialed numbers on the call report.
- You can set **SMDR Talk Time (#611)** to active to print on call reports the time a user spends on an incoming outside call—from the time the user answers the call to the time the call is disconnected from the system.
- You can use **Display Language (#303)** to specify the language in which the call report page header should print.

Considerations

- This feature requires special hardware and/or software. For more information, see "Call Reporting Devices (SMDR)" on page 4-10.
- This procedure is skipped in the sequence of programming procedures when cycling. To use this procedure, enter the code directly.

Using

1. Make sure the paper in the printer is aligned at the top of a new page.
2. Press f 0 0 s s # 6 0 9.
   The system responds by printing the call report page header.
3. Select another procedure or exit programming mode.

Special Dialing Functions

Description

This feature lets you add special characters for System Speed Dial numbers, Personal Speed Dial numbers, and Auto Dial numbers, as follows:

Function	Button	Display	Description
Pause	h	P	Inserts a 1.5-second pause in the dialing sequence to wait for a response, such as a dial tone or computer voice message.
Recall	S	R	Sends a timed switchhook flash needed to alert the system on the other end (such as a PBX or Centrex system), and to use some local telephone company custom calling features (such as Call Waiting). Use Recall only as the first entry in an Auto Dial or Speed Dial number.
Stop	!	S	Stops the dialing sequence until the Auto Dial button or Speed Dial number is used again (for example, so the user can enter additional digits, such as a credit card number or password). To continue, press the Auto Dial button or f and the two- or three-digit Speed Dial code. (Stop cannot be programmed from an MLC-6 or a TransTalk 9000-series phone, since it has no! button.)
Touch-Tone Enable	&	T	Sends touch tones over a rotary line, to electronic equipment such as answering machines and bank computers.

Considerations

Special characters cannot be used when dialing a number manually.

Examples

- **Pause:** To call an answering machine at 555-0529, wait 4.5 seconds, then dial 321 to retrieve messages, enter 5 5 5 0 5 2 9 h h h 3 2 1.
- **Recall/Centrex Feature Button:** The following entry shows how to program an Auto Dial button with a Centrex feature that you use while on a call, for which the feature access code is *32. This example includes a Recall signal to send a switchhook flash to the Centrex system when you

are already on a call. (You can store a Recall signal by pressing S, but only if it is the first character stored.) It also includes a 1.5-second pause (which you insert by pressing h) to allow time to get a new Centrex dial tone: S h * 3 2.

- **Stop:** Your local bank-by-phone service requires that you enter a password before the account number. To program a Personal Speed Dial number or an Auto Dial button to call the bank at 555-7898, include a stop for manually entering the password, and continue with the account number (679 88), enter 5 5 5 7 8 9 8! 6 7 9 8 8.

- **Touch-Tone Enable:** Your system is connected to rotary lines but you want to call an answering machine at 555-3454 to retrieve messages. Since the machine requires touch tones, enter 5 5 5 3 4 5 4 &. All digits pressed during the rest of the call are sent as touch tones.

- **On/Off Centrex Feature Button:** To include both the activation and deactivation codes for a Centrex feature on the same button, press! to include a stop between the two codes. For instance, if the code to activate a Centrex feature is *30 and the code to deactivate the feature is *31, store * 3 0! * 3 1 on the Auto Dial button.

  The first time you press the Auto Dial button, only the number before the stop is dialed (to activate the feature). When you press the button again, the rest of the stored number is dialed (to deactivate the feature).

- **Number Outside a PBX or Centrex System:** To store a number that dials out of a PBX or Centrex system, include a dial-out code in the Speed Dial number. This entry, to dial the number 201 555-4321, includes a dial-out code, a 1.5-second pause, and a toll call prefix of 1 for direct dialing (which may not be required for your dialing area): 9 h 1 2 0 1 5 5 5 4 3 2 1

Star Code Dial Delay (#410)

Description

Central Offices of some phone companies support the use of star codes before the dialed phone number to obtain special services; for example, in some areas, you can dial *67 to prevent Caller ID information from being sent to the called party. (Rotary phones use 11 in place of the *.) Star Code Dial Delay (#410) is designed to help prevent misdialing when star codes are used. For information about the star codes that your Central Office supports, contact your local phone company.

Restriction Resetting

If Star Code Dial Delay is Not Active, the system uses the normal processing of restricted numbers: it checks, digit by digit, to see whether the number is restricted. If the first digit dialed is a * and is not restricted, the call goes through without further checking, since it can no longer match any number on the list.

If Star Code Dial Delay is Active, the system permits star codes that meet the Bellcore® standard:

- 2-digit codes, where the first digit is 0, 1, or 4–9 and the second digit is 0–9 (for example *67, *70)
- 3-digit codes, where the first digit is 2 or 3, the second digit is 0–9, and the third digit is 0–9 (for example *210)

Therefore, when Star Code Dial Delay is Active, the system resets dialing restrictions after leading star codes. The system checks the first two digits dialed. If the first digit is a * or the first two digits are 11, the system then checks whether the following two or three digits are a star code. The digits that follow the star code are then compared again to the restrictions. More than one star code can be dialed at the beginning of a dialing sequence; the system's number restrictions will still work properly, with restriction-checking resetting as often as necessary. For example, *67*705552539 could be dialed to block Caller ID information and to turn off Call Waiting; the system would still check to see whether the 555-2539 number is restricted.

Second Dial Tone

After a star code is dialed, some Central Offices respond by providing a second dial tone as a prompt for the caller to enter more digits. Usually the second dial tone is provided immediately, but if the tone is delayed, the caller should wait for the dial tone before continuing to dial. The system may not recognize the numbers dialed before the second dial tone, which may cause the call to be misrouted.

You can use the Star Code Dial Delay setting to force a delay in Auto Dialed calls after the star code, so that the system waits to dial the rest of the digits until the

second dial tone begins. You can program an automatic pause of 0 to 5 seconds after each star code that is autodialed, whether from a touch-tone or a rotary phone.

Related Features

- You can include star codes in **Allowed Phone Number Lists** and **Disallowed Phone Number Lists**.
- Star Code Dial Delay settings apply to **Auto Dialing**, **Last Number Redial**, **Personal Speed Dial Numbers**, **Save Number Redial**, and **System Speed Dial Numbers**.
- If **Dial Mode (#201)** is set to Rotary, star codes are entered by dialing 11 instead of *. If you have users at extensions with **Outgoing Call Restriction (#401)** set to Local Only who are calling out on lines with the Dial Mode (#201) set to Rotary, you should add “11” to an **Allowed Phone Numbers List (#407)** and assign the list to these extensions. Otherwise, when the users at the restricted extensions dial 1 to begin a star code, the system interprets this as an attempt to place a long-distance call, the call is blocked, and the user hears the reorder tone.
- **System Speed Dial Numbers** can begin with a star code; the system automatically inserts a delay based on the Star Code Dial Delay (#410) setting. To program, enter a Pause followed by the star code and the phone number. For example, press h*675551001.

  A Marked System Speed Dial number can also begin with a star code. To enter it, press * followed by the star code and the phone number. For example, press **675551001.

Considerations

- The Star Code Dial Delay is not inserted in manually dialed numbers.
- If your Central Office provides the second dial tone immediately, you do not need the delay provided by Star Code Dial Delay. In this case, choose the 0 setting to enable restriction checking but avoid the delay.

Valid Entries

0 = 0 Seconds Delay 4
1 = 1 Second Delay
2 = 2 Seconds Delay
3=3 Seconds Delay
4 = 4 Seconds Delay
5 = 5 Seconds Delay
6 = 6 Not Active

Programming

(See Figure 2-3 on page 2-23 for the location of special programming buttons such as s and e on system phones.)

To change the Star Code Dial Delay setting:

1. Press f 0 0 s s # 4 1 0 at extension 10 or 11.
   The current setting is displayed.
2. Press the number on the dialpad for the setting you want (see “Valid Entries,” above), or press D or d until the correct setting is displayed.
3. To return to the default setting, press r.
4. Select another procedure or exit programming mode.

Station Lock (F21)

Description

This feature is available only on system and standard touch-tone phones.

This feature lets users enter a four-digit code on their telephone dialpad to “lock” their extension. Later, the user enters the identical code to unlock the extension. Station Lock helps to prevent unauthorized people from making outside calls from these extensions. You should recommend that users lock their extensions whenever they leave their desks for extended periods of time.

Related Features

- All outside numbers except **Marked** System Speed Dial Numbers and numbers on the **Emergency Phone Number List (#406)** are restricted from locked extensions.
- If a user forgets the code, use **Station Unlock** to unlock the extension.
- Do not lock **External Hotline** extensions.
- Station Lock returns to the status (on/off) it was in before a power failure occurred or **System Reset (#728)** was used.
- You cannot use the **Caller ID Call Logging and Dialing** feature when your extension is locked.

Considerations

- You can program a Station Lock button on a system phone. A button with lights is recommended, so the user can quickly determine whether or not the extension is locked.
- Users can enter a different code each time they lock their extension.
- A user at a locked extension can make intercom calls and can receive intercom and outside calls.

Programming

(See Figure 2-3 on page 2-23 for the location of special programming buttons such as s and e on system phones.)

To program a Station Lock button:

1. Press f 0 0 s s c at extension 10 or 11.
2. Enter the number of the extension to be programmed with this feature.
3. Press a programmable button.
4. Press f 2 1.

5. Program another button for this extension or exit programming mode.

Using

System Phone

You can lock an extension when the phone is idle or while active on an intercom or outside call using the handset or speakerphone.

1. Press the Station Lock button or press f 2 1.
   On a programmed button with lights, the green light flashes.
2. Enter a four-digit code using digits 0–9.
3. Re-enter the four-digit code.

   If the code entered in Step 3 matches the code entered in Step 2, the extension is locked. On a button with lights, the green light changes to on steady. On a display phone, the display shows P14J20 **** J0.

   If the code entered in Step 3 does not match the code entered in Step 2, the extension remains unlocked. On a button with lights, the green light turns off. Repeat the locking procedure on the previous page.

To unlock a locked extension:

1. Press the Station Lock button or press f 2 1.
   On a programmed button with lights, the green light flashes.
2. Enter the four-digit code that you used to lock the extension.

   If the code entered in Step 2 matches the code used to lock the extension, the extension is unlocked. On a button with lights, the green light turns off.

   If the code entered in Step 2 does not match the code used to lock the extension, the extension remains locked. On a button with lights, the green light remains on steady. Repeat the unlocking procedure above.

Standard Phone

To lock a standard touch-tone phone:

1. Lift the handset.
   You hear intercom dial tone.
2. Press # 2 1.
   You hear intercom dial tone again.
3. Enter a four-digit code using digits 0–9.
   You hear intercom dial tone again.
4. Re-enter the four-digit code.

   If the code entered in Step 4 matches the code entered in Step 3, you hear silence. The extension is locked.

If the code entered in Step 4 does not match the code entered in Step 3, you hear fast busy tone and the extension remains unlocked. Repeat the locking procedure above.

To unlock a standard touch-tone phone:

1. Lift the handset.
   You hear intercom dial tone.
2. Press # 2 1.
   You hear intercom dial tone again.
3. Enter the four-digit code that you used to lock the extension.
   You hear intercom dial tone again.

   If the code entered in Step 3 matches the code used to lock the extension, you hear silence and the extension is unlocked.

   If the code entered in Step 3 does not match the code used to lock the extension, you hear fast busy tone and the extension remains locked. Repeat the unlocking procedure above.

Station Unlock (F22)

Description

This feature is available only at extension 10 or 11.

This feature lets you unlock a specific user's locked extension. Use this feature when a user forgets the code he or she used to lock the extension.

Related Features

Use **Station Lock** to lock and unlock from an extension.

Considerations

It is recommended that you do not program this feature on a button.

Using

System Phone

From extension 10 or 11 only:

1. Press f 2 2.
2. Dial the extension number or use an Auto Dial or Manual Signaling button for the extension that you want to unlock.
   The extension is unlocked. If that extension used a Station Lock button with lights to activate the feature, the green light goes off.

Standard Phone

From extension 10 or 11 only:

1. Lift the handset.
   You hear the intercom dial tone.
2. Press # 2 2.
3. Dial the number of the extension that you want to unlock.
   The extension is unlocked.

System Date (#101)

Description

This System Programming procedure sets the month, day, and year. The system displays only the month and day on display phones when the phone is idle; the month, day, and year print on SMDR call reports.

Related Features

- The System Date is used to date-stamp the backup files when you use **Backup Programming—Automatic (#123)** and **Backup Programming—Manual (#124)**.
- **Backup Programming—Automatic (#123)** uses the System Date to schedule the automatic backups.
- **Backup Programming—Automatic (#123)** and **Backup Programming—Manual (#124)** do not backup the System Date.
- **Restore Programming (#125)** does not restore the System Date.

Programming

(See Figure 2-3 on page 2-23 for the location of special programming buttons such as s and e on system phones.)

To change the System Date:

1. Press f 0 0 s s # 1 0 1 at extension 10 or 11.
2. Enter today's date in the form *mmddyy* (month, day, and year), including leading zeros for single-digit months or days. For example, to enter April 26, 1997, press 0 4 2 6 9 7. A display similar to the following appears:

```
System Date
Data 042697
```

3. Select another procedure or exit programming mode.

System Day (#102)

Description

This System Programming procedure sets the day of the week that appears on system display phones.

Related Features

- **Backup Programming—Automatic (#123)** and **Backup Programming—Manual (#124)** do not backup up the System Day.
- **Restore Programming (#125)** does not restore the System Day.

Considerations

Be sure that the System Day is set correctly before using backup or restore procedures.

Valid Entries

1 = Sunday 4
2 = Monday
3 = Tuesday
4 = Wednesday
5 = Thursday
6 = Friday
7 = Saturday

Programming

(See Figure 2-3 on page 2-23 for the location of special programming buttons such as s and e on system phones.)

To change the System Day:

1. Press f 0 0 s s # 1 0 2 at extension 10 or 11.
2. Change the day by entering a new setting number as listed in “Valid Entries” above. For example, to set the day to Tuesday, press D until the display reads:

```
System Day
3 Tuesday
```

3. Select another procedure or exit programming mode.

System Password (#403)

Description

This feature is available only on PARTNER- and MLS-model phones.

This System Programming procedure defines a four-digit password that users can enter from PARTNER- and MLS-model phones to override dialing restrictions (if the extension has access to an outside line).

Related Features

- The password overrides all dialing restrictions except **Line Access Restriction (#302)** and **Pool Access Restriction (#315)**.
- Once a password is programmed, you must enter it to turn Night Service on and off. Additionally, if Night Service is on, users in the **Night Service Group** must enter the password to make any outgoing calls (except calls to numbers on the **Emergency Phone Number List (#406)** and **Marked** System Speed Dial Numbers). Dialing restrictions for extensions not in the Night Service Group remain the same as during normal daytime operation.

Programming

(See Figure 2-3 on page 2-23 for the location of special programming buttons such as s and e on system phones.)

To program a System Password:

1. Press f 0 0 s s # 4 0 3 at extension 10 or 11. A display similar to the following appears:

```
Set System Password
Data - - - - - - - - - - - -
```

2. Enter a four-digit password or press r to delete the existing password.
3. Select another procedure or exit programming mode.

Using

1. **Before lifting the handset or turning on the speaker at a PARTNER- or MLS-model phone,** press h.
2. Enter the password.
   The System Password does not appear on display phones.
3. Press an outside line button (or press i 8 and a two-digit line number) or a pool button (or press i and a three-digit access code) and lift the handset.
4. Dial the number.
   The password is in effect until you hang up the phone.

System Release Status (F59)

Description

When calling for customer support, you need to know the release level of your system. This feature enables you to determine that information at any system display phone.

A display similar to the following appears:

```
P ACS R1.0 C01
```

This message indicates that this is Release 1.0 of the PARTNER Advanced Communications System. The `C01` represents the country code.

Using

To use this feature, press f 5 9 at any system display phone. The system release message replaces the default information on the top line of the telephone display for 15 seconds.

System Reset—Programming Saved (#728)

Description

This System Programming procedure resets the system while retaining the currently programmed settings. Reset the system only when advised to do so by technical support personnel.

Related Features

After a power failure or system reset:

- **Automatic System Answer Button (#111), Direct Extension Dial Button (#113)**, **Night Service Button (#503)** and **Station Lock** return to the status (on or off) that they were in immediately prior to the power failure or system reset.
- The **VMS Cover** button and **Privacy** button return to the status (on or off) determined by the programmed setting of **Automatic VMS Cover (#310)** and **Automatic Extension Privacy (#304)**, respectively. For example, If Automatic Extension Privacy is Assigned and the Privacy button is on when a system reset occurs, the Privacy button will be on again after the system reset. However, if Automatic Extension Privacy is Not Assigned and the Privacy button is on when a system reset occurs, the Privacy button will be off after the system reset.
- All other active features at an extension are reset to the default settings. For example, if an extension has calls forwarded to another extension, resetting the system turns off **Call Forwarding** (if the feature is programmed on a button with lights, the reset also turns off the light for the Call Forwarding button).
- A successful use of **Restore Programming (#125)** causes a System Reset—Programming Saved (#728) to occur.
- The information stored in the **Save Number Redial (F04)** and the **Last Number Redial (F05)** buffers is lost when a System Reset—Programming Saved (#728) occurs.

Considerations

- Resetting the system disconnects all active calls.
- This procedure is skipped in the sequence of programming procedures when cycling. To use this procedure, enter the code directly.
- The system reset begins immediately and takes only a few seconds.
- You cannot interrupt the reset process or use any telephones in the system during the reset process.

- All of the system and telephone programming settings that were in effect before the power failure or down period are retained (except those mentioned in the “Related Features” section above); they do not revert to the default settings.

Using

(See Figure 2-3 on page 2-23 for the location of special programming buttons such as s and e on system phones.)

To reset the system, press f 0 0 s s # 7 2 8 at extension 10 or 11.

A display similar to the following appears:

```
Reset - Save All
```

When the reset is completed, the system is no longer in Programming Mode and the date and time appear on the display.

System Speed Dial Numbers

Description

This feature lets you program a list of up to 100 frequently-dialed numbers for the system. Anyone on the system can dial a System Speed Dial number by pressing f (or # at intercom dial tone on a standard phone) and the three-digit code from 600 through 699. You can *mark* System Speed Dial numbers to override dialing restrictions.

Related Features

- System Speed Dialing, which lets users dial a number by pressing four buttons, is different from **Auto Dialing**, which lets users dial a number by pressing a single button.
- For instructions on entering special characters (such as Pause) in a number, see "Special Dialing Functions" on page 5-240.
- Individuals can have up to 20 additional **Personal Speed Dial Numbers** for use on their own phones.
- You can store account codes as System Speed Dial numbers for use with the **Account Code Entry** feature.
- A System Speed Dial number can begin with a star code; the system automatically inserts a delay based on the **Star Code Dial Delay (#410)** setting. To program, enter a Pause followed by the star code and the phone number. (For example, press h*675551001.)

Considerations

- To program System Speed Dial numbers that override dialing restrictions, *mark* them by entering a star * before the phone number. Note that Marked System Speed Dial Numbers appear on the SMDR call report as F *nnn*, where *nnn* is the Speed Dial code. For more information about SMDR, see "Call Reports" on page 4-11.

  A Marked System Speed Dial number can begin with a star code. To enter it, press * followed by the star code and the phone number. (For example, press **675551001.)
- System Speed Dial codes cannot be programmed on Auto Dial buttons.
- System Speed Dial numbers can be programmed only from extension 10 or 11, but can be used from any extension.
- Refer to a completed System Speed Dial form for the list of numbers to be programmed. After programming the numbers, distribute a copy of the completed form to users. See Appendix D for a blank form.

- If the system is connected to a PBX or Centrex system and a dial-out code (usually 9) is needed to place calls outside the PBX or Centrex system, include the dial-out code and one or more pauses (if available) in Speed Dial numbers that must dial out of the PBX or Centrex system.
- If you program 911 or other emergency numbers as Speed Dial numbers and want to place test calls, you should: 1) perform such activities in the off-peak hours, such as early morning or late evening and 2) remain on the line and briefly explain to the dispatcher the reason for the call before hanging up.
- You can use multiple Auto Dial buttons and Speed Dial numbers during the course of a single call. For example, you can use an Auto Dial button or Speed Dial number to dial the Account Code Entry feature code, and another Speed Dial number to dial the account code.

Valid Entries

Any phone number—up to 28 characters consisting of the digits 0–9, *, #, and special dialing functions that you can access by pressing h (Pause),! (Stop), S (Recall), and & (Touch-Tone Enable)—assigned to codes 600 through 699
No number assigned to any code 4

Programming

(See Figure 2-3 on page 2-23 for the location of special programming buttons such as s and e on system phones.)

To program System Speed Dial numbers:

1. Press f 0 0 at extension 10 or 11. A display similar to the following appears:

```
PROGRAM EXTENSION 10
```

2. Select a three-digit code by pressing f and dialing three digits between 600 and 699. For example, to select code 600, press f 6 0 0.

   If a number is assigned already to the code, the number appears on the display. If no number is assigned to the code, the display reads:

```
Blank
```

3. Enter the number. For example, to program 555-4757, press 5 5 5 4 7 5 7. The following display appears:

```
5554757
```

   To mark the System Speed Dial number to override dialing restrictions, precede the number by a *. For example, to mark the number 555-1001, press * 5 5 5 1 0 0 1. The following display appears:

```
*5551001
```

4. At this point:

- To program another System Speed Dial number, start from Step 2.
- To program over an existing number, enter the new number after selecting the three-digit code.
- To remove a System Speed Dial number, enter the number's three-digit code and press! once.

5. Press f 0 0 to exit programming mode.

Using

System Phone

You can lift the handset or press S before dialing:

1. If you want to call on a specific line, press the line button (or press i 8 and the two-digit line number). *If you want to call on a line in a specific pool at a pooled extension, press the pool button (or press* i and dial the three digit pool access code 880, 881,882, or 883).
2. Press f.
3. Dial the three-digit System Speed Dial code (600–699).
   If you did not specify an outside line or pool, the system automatically selects one, turns on the speaker if the handset is in the cradle, and dials the number. The number being dialed shows on a display phone unless it is a Marked System Speed Dial number.

Standard Phone

1. Lift the handset.
   You hear intercom dial tone.
2. Press #.
3. Dial the three-digit System Speed Dial code (600–699).
   The system automatically selects an outside line and dials the number.

System Time (#103)

Description

This System Programming procedure sets the time that appears on system display phones.

Related Features

- **Backup Programming—Automatic (#123)** uses the System Time to schedule the automatic backups.
- **Backup Programming—Automatic (#123)** and **Backup Programming—Manual (#124)** do not backup the System Time.
- **Restore Programming (#125)** does not restore the System Time.

Considerations

- Be sure that the System Time is set correctly before using backup or restore procedures.
- Enter the time in 24-hour notation. In this scheme, the hours of the day are 0000 (12 midnight) to 2359 (11:59 p.m.). Since each time must have four digits, use leading zeros when necessary. For example, to set the time to 9:00 a.m., enter 0 9 0 0. For 4:45 p.m., enter 1 6 4 5.
- The time appears on system display phones as a.m. or p.m. (not in 24-hour notation).

Programming

(See Figure 2-3 on page 2-23 for the location of special programming buttons such as s and e on system phones.)

To change the System Time:

1. Press f 0 0 s s # 1 03 at extension 10 or 11.
2. Enter a new time in 24-hour notation. For example, to set the time to 2:15 p.m., press 1 4 1 5. A display similar to the following appears:

```
System Time
Data 1415
```

   This time appears on system display phones as 2:15 p.

3. Select another procedure or exit programming mode.

Toll Call Prefix (#402)

Description

This System Programming procedure indicates whether users must dial a 0 or 1 before the area code to make a long-distance call, or just the area code and number. This feature should be set to reflect the dialing patterns of your local telephone company.

Related Features

This procedure affects the operation of dialing restrictions and permissions. For more information, see "Allowed Phone Number Lists (#407)" on page 5-13, "Disallowed Phone Number Lists (#404)" on page 5-109, and "Emergency Phone Number List (#406)" on page 5-122.

Valid Entries

1 = 0 or 1 required before Area Code and Number 4
2 = Area Code and Number Only

Program

(See Figure 2-3 on page 2-23 for the location of special programming buttons such as s and e on system phones.)

To change the Toll Call Prefix setting:

1. Press f 0 0 s s # 4 0 2 at extension 10 or 11.
2. Press D until the appropriate value displays.
3. Select another procedure or exit programming mode.

Touch-Tone Enable (F08)

Description

This feature is available only on system phones.

This feature lets a system phone user send touch-tone signals on an outside call over a rotary line. For example, a user may need to dial touch-tone digits while on a call to a bank-by-phone service.

Related Procedures

- You must use **Dial Mode (#201)** to identify rotary lines to the system.
- To activate this feature from within a number stored on an Auto Dial button or as part of a Speed Dial number, press & when storing the number—see "Special Dialing Functions" on page 5-240.

Considerations

- This feature is needed only when dialing on a rotary line.
- Use Touch-Tone Enable only *after* a call is connected. For example, use this feature after dialing a bank-by-phone service that requires you to dial touch-tone digits.
- You can program a Touch-Tone Enable button on a system phone to turn on Touch-Tone Enable with one touch.

Programming

(See Figure 2-3 on page 2-23 for the location of special programming buttons such as s and e on system phones.)

To program a Touch-Tone Enable button:

1. Press f 0 0 s s c at extension 10 or 11.
2. Enter the number of the extension to be programmed with this feature.
3. Press a programmable button.
4. Press f 0 8.
5. Program another button for this extension or exit programming mode.

Using

From a system phone, press the programmed button or press f 0 8 when you need to enter touch-tone digits. Touch-Tone Enable stays in effect until you hang up.

Transfer Return Extension (#306)

Description

By default, transferred calls return to the originating extension if they are not answered. This System Programming procedure can be used to identify a different return extension for the extension that transfers a call.

Related Features

- You can use **Transfer Return Rings (#105)** to define the number of times all system extensions should ring with transferred calls before they return to their transfer return extensions.
- The transfer return extension for any extensions associated with auto attendant or voice messaging system hardware should be extension 10 (or another extension with a person who can assist the caller). **AA Extensions (#607)** is used to identify the extensions associated with auto attendant hardware and **Hunt Group Extensions (#505)** is used to identify the extensions associated with voice messaging system hardware.
- If an extension has **VMS Cover** active, unanswered calls to that extension are routed to the voice messaging system rather than to the transfer return extension.
- For transferred calls that are sent to a covering extension with **Call Coverage**: if the covering extension does not answer within the specified number of **Call Coverage Rings (#116)**, the call rings the specified number of **Transfer Return Rings (#105)** before it transfer returns. If the covering extension has **Do Not Disturb** active, the call rings one more time after the specified number of Call Coverage Rings (#116) before it transfer returns.

Considerations

- An unanswered transferred call returns to the transfer return extension identified for the extension *transferring* the call, not the extension receiving the call.
- Do not designate an extension associated with auto attendant or voice messaging system hardware as the transfer return extension for any user extension.
- Transfer return calls do not receive call coverage or voice mail coverage.

Valid Entries

Extension transferring call 4
Any extension other than the one transferring the call

Programming

(See Figure 2-3 on page 2-23 for the location of special programming buttons such as s and e on system phones.)

To change the Transfer Return Extension for a specific extension:

1. Press f 0 0 s s # 3 0 6 at extension 10 or 11.
2. Dial the number of the originating extension.
3. Dial the number of the extension to which the call should return if it is not answered.
4. To program another extension, press n or p until the extension number shows on the display. Repeat Step 3.
5. Select another procedure or exit programming mode.

Transfer Return Rings (#105)

Description

This System Programming procedure, which applies to all system extensions, defines the number of times a transferred call rings before it goes to the transfer return extension.

Related Features

- By default, transferred calls return to the originating extension if they are not answered. You can use **Transfer Return Extension (#306)** to specify a different return extension for the extension that transfers a call.
- If you program **Hunt Group Extensions (#505)**, make sure this setting is four or more rings. This setting allows the call to continue hunting to other group extensions if it is not answered by the first group extension where it rings.
- If an extension has **VMS Cover** active, unanswered calls to that extension are routed to the voice messaging system rather than to the transfer return extension.
- For transferred calls that are sent to a covering extension with **Call Coverage**: if the covering extension does not answer within the specified number of **Call Coverage Rings (#116)**, the call rings the specified number of **Transfer Return Rings (#105)** before it transfer returns. If the covering extension has **Do Not Disturb** active, the call rings one more time after the specified number of **Call Coverage Rings (#116)** before it transfer returns.

Considerations

- If you have a fax machine or an answering machine connected to the system, set Transfer Return Rings to a number greater than the number of rings at which these devices answer. Doing so prevents a call transferred to a fax or answering machine from returning before it is answered.
- The system does not start counting the number of rings for a transferred call (to determine when it goes to the transfer return extension if it is not answered) until the transfer originator hangs up.

Valid Entries

0–9 (0 rings = no return)
4 4

Programming

(See Figure 2-3 on page 2-23 for the location of special programming buttons such as s and e on system phones.)

To change the number of times a transferred call rings before returning to the transfer return extension:

1. Press f 0 0 s s # 1 0 5 at extension 10 or 11.
2. Enter a setting (0–9). For example, to set a Transfer Return of 5 rings, press D until a display similar to the following appears:

```
Transfer Return
5 Rings
```

3. Select another procedure or exit programming mode.

Transferring Calls

Description

This section explains how to transfer calls using the & button on a system phone or the switchhook on a standard phone. Transferring a call lets users “pass” a call from one extension to another. Users can transfer both outside calls and intercom calls to other extensions.

Related Features

- To transfer calls to an extension with a single touch, you can program the extension number on an Auto Dial button—see “Auto Dialing” on page 5-19.
- To transfer calls to an extension for which you have a **Manual Signaling** button, press & before pressing the Manual Signaling button.
- While a call is being transferred, the caller hears ringing if **Ring on Transfer (#119)** is Active. If it is Not Active and **Music On Hold (#602)** is Active and an audio source is connected to the system, the caller hears music-on-hold while the call is being transferred to the destination extension. If Music On Hold is Not Active and **Ring on Transfer (#119)** is Not Active, the caller hears silence.
- The system is factory-set to return a transferred call, after it rings four times at the destination extension, to the extension that transferred it. You can use **Transfer Return Rings (#105)** to change the number of rings for all system extensions. You can use **Transfer Return Extension (#306)** to program a different extension to which unanswered calls from a particular extension should return.
- If users transfer a call, **Caller ID** information (if it is available) is passed to the destination extension.
- If you have a voice messaging system, you can use **Voice Mailbox Transfer** to transfer a caller directly to a subscriber’s voice mailbox.
- An extension programmed with **Call Waiting (#316)** cannot transfer either of two active calls.

Considerations

- When you press &, the call is put on hold and its associated green light winks.
- A transferred call appears on the destination extension’s intercom button unless the destination extension has a line button for the line on which the call was received.

- When a call you transferred is answered, if you began the call on an individual line, the red light goes on next to the line button goes on; if you began the call on a line in a pool, the call no longer appears on your phone.
- If you transfer a call to an extension for which you have an Auto Dial button and the call is unanswered, the green light next to the Auto Dial button flutters when the call returns to your extension.
- Calls can be transferred to Calling Groups and Hunt Groups. Hunt Group calls do not Transfer Return if the call is not answered and if **Transfer Return Rings (#105)** is set to 4 or more rings.
- When you transfer a call from a display phone, the number to which you are transferring the call briefly appears on the display. If a transferred call is unanswered, the number of the extension that is returning the transferred call also appears on display phones.
- If you are using the system behind a PBX or Centrex system, the PBX or Centrex system may include a call transfer feature that lets you transfer a call to another Centrex extension, so that the line on which the call came in is free to place and receive other calls. However, to use Centrex transfer, you must be able to dial the extension directly using the Centrex extension number; if a Centrex line is shared by several extensions, you cannot use Centrex transfer to direct the call to a specific extension. For more information about such features, see the documentation for your PBX or Centrex system. (When your Centrex or PBX documentation tells you to use a switchhook flash, use the system **Recall** feature instead.)
- On a system phone, a transferred call rings with an intercom ring (ring BEEP) until the originator hangs up, then it changes to a transfer ring (ring BEEP BEEP). On a standard phone, a transferred call rings with an intercom ring (ring ring) until the originator hangs up, then it changes to a transfer ring (ring ring ring).

How to Transfer a Call

System Phone

- To pass a call to another extension:
  1. While active on the call, press &.
     The call is put on hold and you hear intercom dial tone. The green light next to the line or pool button winks.
  2. Dial the extension number (or 7 7 and a Hunt Group number or 7 and a Calling Group number) to which you want the call transferred.
  3. When someone answers, announce the call, then hang up.
     If no one answers or the call is refused, press the line or pool *button next to the winking green light to reconnect to the caller.*

- If you do not wish to announce the call, hang up as soon as you hear ringing (after Step 2 above). If no one answers, the call rings back at your extension (unless a different transfer return extension is programmed for your extension)—lift the handset and you are reconnected to the caller.
- To make a voice-signaled transfer to a system phone, in Step 2 of the procedure on the previous page, press * plus the two-digit extension number. Then listen for one of the following responses:
  - If you hear *one beep,* you have reached an idle system phone. You can speak after the beep.
    Your voice is heard through the other extension's speaker. If no one answers or the call is refused, press the line or pool *button next to the winking green light to reconnect to the caller. If the call is accepted, hang up.*
  - If you hear *two beeps,* you have reached a busy system phone with Voice Interrupt On Busy Assigned. You can speak after the beeps.
    Your voice is heard through the recipient's handset or speaker. Be aware that the third party to whom the recipient is speaking probably also will hear the two beeps and the faint sound of your voice. Be brief and discreet in your interruption. If the recipient has a Voice Interrupt On Busy Talk-Back button, wait for a response. If the call is accepted, hang up to complete the transfer. The call rings at the recipient's extension. If the call is refused, press the line or pool *button next to the winking green light to reconnect to the caller.*
  - If you hear *ringing,* you have reached a standard phone, an idle MLC-6 or TransTalk 9000-series phone, or a busy system phone with Voice Interrupt On Busy Not Assigned.
    When someone answers, announce the call, then hang up. If no one answers or the call is refused, press the line or pool *button next to the winking green light to reconnect to the caller*.
- To transfer a call with one button touch:

  While on a call, press the Auto Dial button programmed for the extension, or the Hunt Group or Calling Group button for the group, to which you want to transfer the call. (There is no need to press & or n; this takes the place of Steps 1 and 2 in the procedure on the previous page.)

  For an extension that has a system phone, you can program * *plus the extension number on the Auto Dial button, so you can announce the calls when you transfer them.*

Standard Phone

- To pass a call to another extension:
  1. While on a call, press the switchhook down once rapidly.
     You hear intercom dial tone.
  2. Dial the extension number (or 7 7 and a Hunt Group number or 7 and a Calling Group number) to which you want the call transferred.

3. When someone answers, announce the call, then hang up.
   If no one answers or the call is refused, press the switchhook again to reconnect to the caller.

- If you do not wish to announce the call, hang up as soon as you hear ringing (after Step 2 above). If no one answers, the call rings back at your extension (unless a different transfer return extension is programmed for your extension)—lift the handset and you are reconnected to the caller.
- To make a voice-signaled transfer to a system phone, in Step 2 above press * plus the two-digit extension number. Then listen for one of the following responses:
  - If you hear *one beep,* you have reached an idle system phone. You can speak after the beep.
    Your voice is heard through the other extension's speaker. If no one answers or the call is refused, press the switchhook again to reconnect to the caller. If the call is accepted, hang up.
  - If you hear *two beeps,* you have reached a busy system phone with Voice interrupt On Busy Assigned. You can speak after the beeps.
    Your voice is heard through the recipient's handset or speaker. Be aware that the third party to whom the recipient is speaking probably also will hear the two beeps and the faint sound of your voice. Be brief and discreet in your interruption. If the recipient has a Voice Interrupt On Busy Talk-Back button, wait for a response. If the call is accepted, hang up to complete the transfer. The call rings at the recipient's extension. If the call is refused, press the switchhook again to reconnect to the caller.
  - If you hear *ringing,* you have reached a standard phone, an idle MLC-6 or TransTalk 9000-series phone, or a busy system phone with Voice Interrupt On Busy Not Assigned.
    When someone answers, announce the call, then hang up. If no one answers or the call is refused, press the switchhook again to reconnect to the caller.

VMS Cover (F15)

Description

This feature applies only if you have a voice messaging system. It is available only on system phones.

This feature lets system phone users press a programmed button to turn VMS Cover on and off, routing unanswered intercom and transferred calls for their extension to the Call Answer Service of the voice messaging system after the specified number of rings (factory setting is three rings).

Related Features

- If **Automatic VMS Cover (#310)** is Assigned to an extension, that extension normally is covered by the voice messaging system. For greater flexibility, the user can use this feature to program a VMS Cover button to turn coverage on and off as needed. Once a VMS Cover button is programmed, the user *must* use the button to turn VMS Cover on and off even though Automatic VMS Cover (#310) is Assigned.
- VMS Cover also applies to outside calls on lines assigned ownership with **Line Coverage Extension (#208)**.
- Use **VMS Cover Rings (#117)** to change the number of times intercom and transferred calls or outside calls on lines assigned ownership ring at extensions before they are sent to the voice messaging system.
- A user can turn on VMS Cover while a call is ringing to send that call immediately to his or her voice mailbox. See "Send All Calls" on page 5-229.
- Users with VMS Cover already turned on can activate **Do Not Disturb** to **Send All Calls** immediately to their voice mailbox.
- If an extension has VMS Cover and **Call Coverage** active, calls ring at the covering extension for the specified number of **Call Coverage Rings (#116).** If the covering extension does not answer, the call is routed to the voice mailbox of the extension that activated Call Coverage after the specified number of VMS cover rings.
- If an extension has VMS Cover and **Call Forwarding** active, calls ring at the call forwarding destination extension; they are not covered by the voice messaging system.

Considerations

- This feature must be programmed on a button with lights.
- This feature does not apply to coverage calls, forwarded calls, group calls, parked calls, transfer-return calls, Voice Interrupt on Busy calls, or voice-signaled calls.

Programming

(See Figure 2-3 on page 2-23 for the location of special programming buttons such as s and e on system phones.)

To program a VMS Cover button:

1. Press f 0 0 s s c at extension 10 or 11.
2. Enter the number of the extension to be programmed with this feature.
3. Press a programmable button with lights.
4. Press f 1 5.
5. Program another button for this extension or exit programming mode.

Using

From a system phone, press the programmed button to turn VMS Cover on; press it again to turn it off. Use the button like a switch—when the light is on, VMS Cover is on and your unanswered intercom and transferred calls or outside calls on lines assigned ownership go to your voice mailbox after the specified number of VMS Cover Rings.

If you turn on VMS Cover while a call is ringing, the call is sent immediately to your voice mailbox.

If VMS Cover is already on and a call begins to ring, you can turn on Do Not Disturb to send that call and any subsequent calls immediately to your voice mailbox.

VMS Cover Rings (#117)

Description

This feature applies only if you have a voice messaging system.

This System Programming procedure, which applies to all system extensions programmed for VMS Cover, defines the number of times a call rings before it is sent to a user's voice mailbox.

Related Features

- VMS Cover also applies to lines that have been designated an owner with **Line Coverage Extension (#208)**.
- If an extension has **VMS Cover** or **Automatic VMS Cover (#310)** active, unanswered calls to that extension are routed to the voice messaging system after the specified number of VMS Cover Rings.

Valid Entries

1–9
3 4

Programming

(See Figure 2-3 on page 2-23 for the location of special programming buttons such as s and e on system phones.)

To change the number of times calls ring before being sent to the voice messaging system:

1. Press f 0 0 s s # 1 1 7 at extension 10 or 11.
2. Enter a setting (1–9). For example, to set VMS Cover Rings to 4, press D or d until a display similar to the following appears:

```
VMS Cover Rings
 4 Rings
```

3. Select another procedure or exit programming mode.

VMS Hunt Delay (#506)

Description

This feature applies only if you have a voice messaging system.

This System Programming procedure determines when outside calls should be answered by the Automated Attendant Service of the voice messaging system. You can set the system for either immediate call handling (after the second ring) or delayed call handling (after the fourth ring). Delayed call handling gives the receptionist an opportunity to answer calls before they go to the Automated Attendant Service.

Related Features

- You must use **Group Call Distribution (#206)** to assign lines to Hunt Group 7.
- You must use **Hunt Group Extensions (#505)** to assign the extensions associated with the voice messaging system hardware to Hunt Group 7.

Valid Entries

1 = Immediate 4
2 = Delayed

Programming

(See Figure 2-3 on page 2-23 for the location of special programming buttons such as s and e on system phones.)

To change the VMS Hunt Delay setting for the voice messaging system's Automated Attendant service:

1. Press f 0 0 s s # 5 0 6 at extension 10 or 11.
2. Press D until the appropriate value displays.
3. Select another procedure or exit programming mode.

VMS Hunt Schedule (#507)

Description Voice mail

This feature applies only if you have a voice messaging system.

This System Programming procedure determines whether the outside lines assigned to Hunt Group 7 hunt through the VMS Hunt Group all the time, only during Day operation (Night Service is off), or only during Night operation (Night Service is on). This feature affects only the Automated Attendant Service of the voice messaging system.

Related Features

- You must use **Group Call Distribution (#206)** to assign lines to Hunt Group 7.
- You must use **Hunt Group Extensions (#505)** to assign the extensions associated with the voice messaging system hardware to Hunt Group 7.
- If you set the VMS Hunt Schedule for Day Only or Night Only, you must use **Night Service Button (#503)** to program a Night Service button for extension 10.

Valid Entries

1 = Always 4
2 = Day Only
3 = Night Only

Programming

(See Figure 2-3 on page 2-23 for the location of special programming buttons such as s and e on system phones.)

To change the VMS Hunt Schedule setting for the voice messaging system's Automated Attendant Service:

1. Press f 0 0 s s # 5 0 7 at extension 10 or 11.
2. Press D until the appropriate value displays.
3. Select another procedure or exit programming mode.

Voice Interrupt On Busy (#312)

Description

This feature is available only on system phones.

This System Programming procedure identifies extensions that can receive voice interrupt on busy calls. A voice interrupt on busy call is a special intercom call that lets a user (the originator) interrupt and speak to another user (the recipient) who is busy on an intercom or outside call with one other party.When voice interrupt on busy is initiated, the recipient hears two beeps before hearing the originator's voice. The originator and the recipient should be aware that the third party to whom the recipient is speaking probably will hear both the beeps and the faint sound of the originator's voice. This feature typically is used by the receptionist to alert the boss to an important incoming call or event when the boss is already on a call.

Related Features

- **Making Calls** and **Transferring Calls** provide more instructions for making and transferring voice interrupt on busy calls.
- The recipient can use a **Voice Interrupt on Busy Talk-Back** button to respond to the originator of the voice interrupt on busy call. The recipient's response will not be heard by the third party.
- Users cannot receive voice interrupt on busy calls if:
  - **Do Not Disturb** is active at their extension.
  - They are part of a joined call (**Joining Calls**).
  - They are part of a **Conference Call.**

Considerations

- The voice interrupt on busy tone (two beeps) is unique to distinguish it from a voice-signaled intercom call tone (one beep).
- If a voice interrupt on busy call is made to an *idle* extension, the originator and the recipient hear a voice-signaled intercom call tone (one beep) instead.
- If you receive a voice interrupt on busy call and press h, the third party is put on hold and the originator hears two beeps that indicate you have ended the voice interrupt on busy call. At this point:
  - To talk to the originator, if the green light next to the i button is flashing, press i. (You cannot use the Voice Interrupt On Busy Talk-Back button once a voice interrupt on busy call has ended.)
  - To resume your conversation with the third party, press the line or pool button next to the winking green light.

- Any party involved in a voice interrupt on busy call cannot be involved in a second voice interrupt on busy call until the first is finished.

Valid Entries

1 = Assigned
2 = Not Assigned 4

Programming

(See Figure 2-3 on page 2-23 for the location of special programming buttons such as s and e on system phones.)

To change the Voice Interrupt On Busy setting for an extension:

1. Press f 0 0 s s # 3 1 2 at extension 10 or 11.
2. Enter the number of the extension to be programmed with this feature.
3. To assign or unassign Voice Interrupt On Busy, press D until the appropriate value displays.
4. Select another procedure or exit programming mode.

Using

To initiate a voice interrupt on busy call:

1. From a system phone, press i.
2. Press * plus a two-digit extension number (or use an Auto Dial button).
3. Listen for one of the following responses:
   - If you hear *one beep,* you have reached an idle system phone. You can speak after the beep.
     Your voice is heard through the other extension's speaker. If the recipient is present, he or she can reply.
   - If you hear *two beeps,* you have reached a busy system phone with Voice Interrupt On Busy Assigned. You can speak after the beeps. Be aware that the third party to whom the recipient is speaking probably also will hear the two beeps and the faint sound of your voice.
     If the recipient has a Voice Interrupt On Busy Talk-Back button, wait for a response. If you hear a second set of beeps, the recipient has ended the voice interrupt on busy call. In either case, hang up to end your part of the voice interrupt on busy call.
   - If you *hear ringing,* you have reached a standard phone, an idle MLC-6 or TransTalk 9000-series phone, or a system phone that is idle, has Do Not Disturb turned off, and has Voice Interrupt On Busy Not Assigned. Your call is not completed until someone answers.

Voice Interrupt On Busy Talk-Back (F18)

Description

This feature is available only on system phones.

This feature lets you program a button that is used to respond to a voice interrupt on busy call while the user is active on another call.

Related Procedures

You must use **Voice Interrupt On Busy (#312)** to identify extensions that can receive an intercom call while busy on another call.

Considerations

Voice Interrupt On Busy Talk-Back must be programmed on a button with lights. This feature will not work if it is programmed on a button without lights.

Programming

(See Figure 2-3 on page 2-23 for the location of special programming buttons such as s and e on system phones.)

1. Press f 0 0 s s c at extension 10 or 11.
2. Enter the number of the extension to be programmed with this feature.
3. Press a programmable button with lights.
4. Press f 1 8.
5. Program another button for this extension or exit programming mode.

Using

To respond to a voice interrupt on busy call (you hear two beeps and the originator's voice—be aware that the third party to whom you are speaking probably also will hear the two beeps and the faint sound of the originator's voice):

1. Ask the party with whom you are speaking to hold, but *do not* put the call on hold.
2. Press the Voice Interrupt On Busy Talk-Back button.
   The green light next to the Voice Interrupt On Busy Talk-Back button turns on. Voice Interrupt On Busy Talk-Back is activated.
3. Respond to the originator of the voice interrupt on busy call.
   The third party with whom you were originally speaking does not hear your response, but you can hear that third party.

4. Press the Voice Interrupt On Busy Talk-Back button again (whether or not the originator has hung up) to resume the conversation with the third party. *The green light next to the Voice Interrupt On Busy Talk-Back button turns off. Voice Interrupt On Busy Talk-Back is deactivated. The originator hears two beeps if he or she did not hang up previously.*

Voice Mailbox Transfer (F14)

Description

This feature applies only if you have a voice messaging system. It is available only on system phones.

This feature lets a system phone user transfer a caller directly to a specific extension's voice mailbox, in order for the caller to leave a message without first ringing the extension. This feature is useful when a user knows that a co-worker is away from his or her desk.

Related Features

While a call is being transferred, the caller hears ringing if **Ring on Transfer (#119)** is Active. If it is Not Active and **Music On Hold (#602)** is Active and an audio source is connected to the system, the caller hears music-on-hold while the call is being transferred to the voice mailbox. If Music On Hold is Not Active and Ring on Transfer (#119) is Not Active, the caller hears silence.

Considerations

You can program a Voice Mailbox Transfer button on a system phone to transfer a caller directly to a voice mailbox by pressing the button then dialing the mailbox subscriber's extension number.

Programming

(See Figure 2-3 on page 2-23 for the location of special programming buttons such as s and e on system phones.)

To program a Voice Mailbox Transfer button:

1. Press f 0 0 s s c at extension 10 or 11.
2. Enter the number of the extension to be programmed with this feature.
3. Press a programmable button.
4. Press f 1 4.
5. Program another button for this extension or exit programming mode.

Using

To transfer a caller to a specific subscriber's mailbox:

1. From a system phone, press the programmed button or press f 1 4.
2. Dial the two-digit extension number (or press an Auto Dial button) of the mailbox subscriber for whom the caller wants to leave a message.
   The caller is routed to the mailbox and hears the recorded greeting for that mailbox.
3. Hang up.

Wake Up Service Button (#115)

Description

This System Programming procedure identifies a button on the system phone at extension 10 to be used for scheduling wake up (or reminder) calls for system extensions. When a wake up call is scheduled, the system makes an intercom call to the target extension at the scheduled time. If the first call is not answered or the called extension is busy, the system makes a second attempt five minutes later.

Related Features

- Wake up time is based on **System Time (#103)**.
- If users answer a wake up call, they hear **Music On Hold (#602)** if it is Active. If Music On Hold is Not Active, users hear silence.
- Wake up calls ring at target extensions even if **Do Not Disturb** is active at the extension.
- Wake up calls to a target extension that has **Call Forwarding** active ring at the extension—the calls are not forwarded
- Wake up calls that are not answered do not go to voice mail coverage, even if **VMS Cover** is active at the target extension.

Considerations

- A Wake Up Service button must be programmed on the system display phone at extension 10.
- Wake Up Service must be programmed on a button with lights. This feature will not work if it is programmed on a button *without* lights.
- A scheduled wake up call occurs *once* in a 24-hour period. If you want to send a wake up call at the same time on the next day, you must reschedule the call.
- Wake up calls ring the target extension for approximately 30 seconds (or six rings).
- Wake up calls are not placed to extensions assigned as doorphones.

Valid Entries

1 =Assigned to next available button at extension 10
2 =Not Assigned 4
3 =Select button (then press a programmable button to assign Wake Up Service to that button)

Programming

(See Figure 2-3 on page 2-23 for the location of special programming buttons such as s and e on system phones.)

To program a Wake Up Service button at extension 10:

1. Press f 0 0 s s # 1 1 5 at extension 10 or 11.
2. At this point:
   - If you want to assign Wake Up Service to the first available button, press D until a display similar to the following appears:

```
Wake Up Service Button
1 Assigned - Ext10
```

   - If you want to remove the Wake Up Service button assignment, press D until a display similar to the following appears:

```
Wake Up Service Button
2 Not Assigned
```

   - If you want to assign Wake Up Service to a specific button, press 3. A display similar to the following appears:

```
Wake Up Service Button
3 Select a Button
```

   Then press a programmable button with lights to assign Wake Up Service to that button.

3. Select another procedure or exit programming mode.
4. Label the Wake Up Service button at extension 10.

Using

To schedule a wake up call for a specific extension:

1. Press the Wake Up Service button at extension 10.
   The green light next to the Wake Up Service button flutters. Wake Up Service is activated and the display reads:

```
Wake Up Call
```

2. Dial the two-digit extension number of the desired extension (or use an Auto Dial button). For example, to schedule a wake up call for extension 32, press 3 2. A display similar to the following appears:

```
Wake Up Call 32 -:-
```

3. Enter the wake-up time in 24-hour notation. For example, to set the time to 2:15 p.m., press 1 4 1 5. When you have finished entering the time, the display reads:

```
Wake Up Call 32 14:15
```

The wake up call is scheduled, and the green light next to the Wake Up Service button turns off.

To review a scheduled wake up time for a specific extension:

1. Press the Wake Up Service button at extension 10.
2. Dial the two-digit target extension number (or use an Auto Dial button).
3. Review the displayed wake up time and target extension number.
4. Press the Wake Up Service button to exit.
5. Repeat Steps 1 through 4 to review wake up times for other extensions.

To cancel a scheduled wake up call:

1. Press the Wake Up Service button at extension 10.
2. Dial the two-digit target extension number (or use an Auto Dial button).
3. Press #.
4. Repeat Steps 1–3 to cancel a scheduled wake-up call for another extension.

Troubleshooting

6

The following sections describe various difficulties that might occur, possible causes for the difficulty, and procedures you can follow to try to solve the problem. Programming procedure names are shown in **boldface** type; for more information about a specific procedure, refer to the procedure name in Chapter 5.

Customer Self Service Center on the Internet

If you can access the Internet, you can use the Customer Self Service Center to get on-line information such as:

- Answers to frequently asked questions
- 800 number directory

If you have a service agreement, active lease, or warranty, you also can get on-line information such as:

- Feature programming tips
- Notification of changes to products
- Product documentation
- Chat service

The Internet address for the Customer Self Service Center is:
http://www.lucent.com/BusinessWorks/selfservice

When You Need Help

If you have a problem with your system, you may be able to solve it by following the appropriate troubleshooting procedures described in this chapter. If not, you can call for help. **In the continental U.S. Lucent Technologies provides a toll-free customer hotline 24 hours a day. Inside the continental U.S., call the hotline at 1 800 628-2888 or your Lucent Technologies Authorized Dealer if you need assistance when installing, programming, or using your system. Consultation charges may apply. Outside the continental U.S., contact your Lucent Technologies Representative or local Authorized Dealer.**

If you call, have the following information ready so that the representative can better help you:

- The kind of system you have (for example, PARTNER Advanced Communications System Release 1.0). To determine the release number, press Feature 5 9 at any display phone.
- The number of lines and extensions in your system
- The type of phone (system or standard) and the model number, if applicable. System phone model numbers are located either on the upper right-hand corner of the phone or on the dialpad overlay.
- If you followed a troubleshooting procedure and need more help, tell the representative what you did.

Power Failure Operation

When power to the system is cut off, the first two lines on the PARTNER Advanced Communications System module automatically connect to the first two extensions on the module, and the first line on each 206 or 308EC module connects to its first extension.

This enables you to make and answer calls during a power outage, provided you have a standard phone connected to any of these extensions. (During a power failure, standard phones can only make and receive calls—other system features are not available.)

The system can stay programmed for a minimum of 45 days and a maximum of six months after it stops receiving power, depending on the freshness of the batteries. When the batteries are drained, all of the system's programmed settings return to the factory settings. It is recommended that you install fresh batteries every year. See "Battery Replacement" on page 6-3 for more information.

Battery Replacement

NOTE:
Do not turn off the power or remove the processor module before replacing the batteries! If you do, all settings for system and telephone programming will revert to the default settings. If you have a Backup/Restore PC Card, it is highly recommended that you do a backup before changing the batteries.

The PARTNER ACS processor module uses two user-replaceable AAA alkaline batteries. These batteries provide enough power to retain the system programming settings during a power failure for 45 days to six months, depending on the freshness of the batteries. When battery power is getting low, the system displays a `ChgBat W/PowerOn or ReplaceSysBat W/Power On` message on the top line of display phones at extensions 10 and 11 in place of the default day/date/time message. Users at these extensions should be instructed to notify you when they see this message. You should replace the batteries within 45 days of seeing the message.

NOTE:
The message may flicker on and off as the batteries approach the low-power threshold.

It is recommended that you change the batteries in the processor module every year, even if the system has not yet displayed the ReplaceSysBat W/Power On message. Choose good-quality alkaline batteries.

Use the following procedure to replace the batteries:

1. Locate the battery compartment at the bottom of the PARTNER ACS processor module, below the extension jacks (see Figure 6-1). Push gently on the battery icon (the locking latch) and slide the battery icon up to cover the “plus” icon.

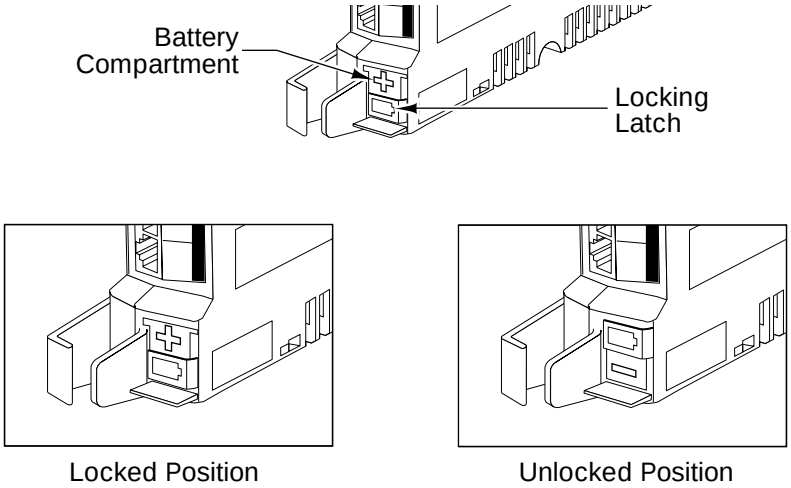

Figure 6-1. Battery Compartment, PARTNER Advanced Communications System Processor Module

2. Remove the battery assembly by gently pulling the tab at the bottom of the battery compartment cover (see Figure 6-2).

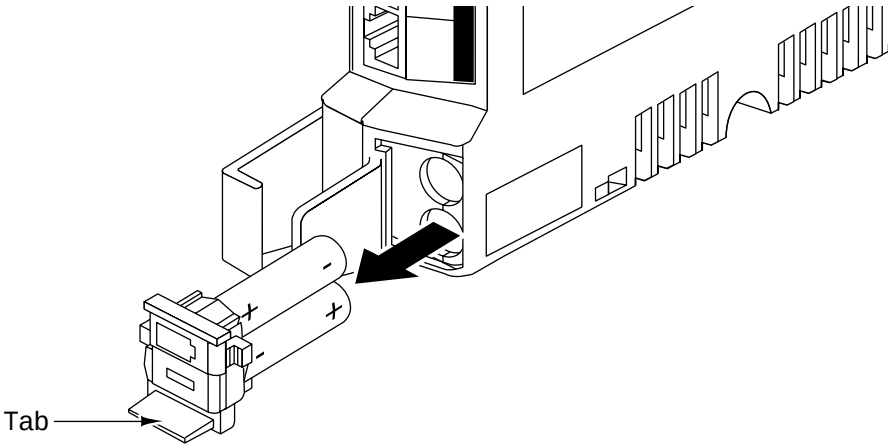

Figure 6-2. Removing the Battery Assembly

3. Pull the batteries straight out of the metal spring clips (see Figure 6-3), and dispose of the batteries properly.

CAUTION:

Do not dispose of batteries in fire. Do not recharge, disassemble, install backwards, or mix with used or other battery types—batteries may explode or leak and cause a burn injury.

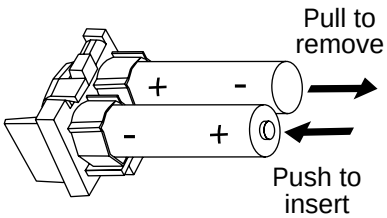

Figure 6-3. Removing or Inserting Batteries in the Battery Assembly

4. Insert two new AAA-size standard alkaline batteries into the metal spring clips by pushing them straight in, placing the negative (–) end of one battery into the bottom clip, and the positive (+) end of the other battery into the top clip.
5. With the locking latch in the unlocked position (battery icon and “minus” icon visible), slide the battery assembly into the processor module along the battery guides on the inside of the battery compartment (see Figure 6-4).

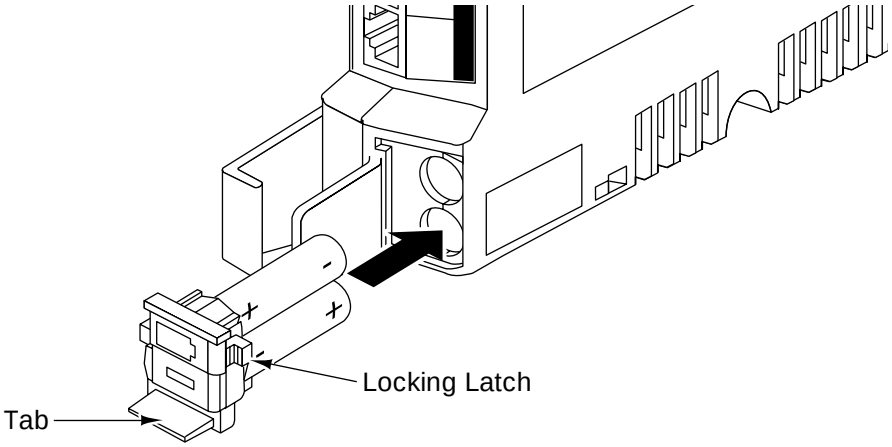

Figure 6-4. Inserting Battery Assembly and Batteries into Battery Compartment

6. Make sure the battery assembly is pushed in far enough that the edges of the assembly slip behind the plastic housing of the processor module.

7. Pressing lightly on the battery icon on the front of the battery assembly, slide the locking latch downward to secure the assembly in place (see Figure 6-5). The “plus” icon and the battery icon should now be visible on the front of the battery assembly. This is the locked position.

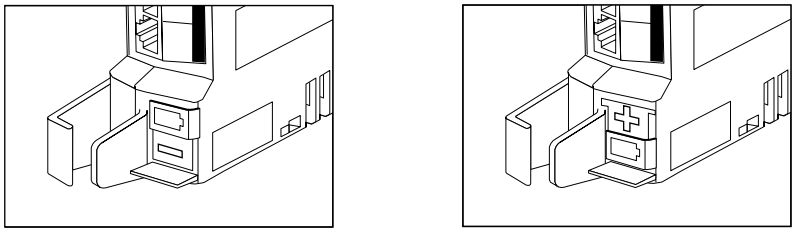

Unlocked Position Locked Position

Figure 6-5. Battery Assembly in Unlocked and Locked Position

8. Go to extension 10 or 11 and verify that the ReplaceSysBat W/Power On message is no longer displayed. If it is displayed, check that the batteries are installed correctly and that they are new. If the message is still displayed, call the hotline.*

* In the continental U.S., help is available at 1 800 628-2888. Outside the continental U.S., call your Lucent Technologies Representative or local authorized Dealer.

Clearing a Backup-Failure Alarm

If you use **Backup Programming—Automatic (#123)** and the automatic backup fails, a Backup-Failure Alarm message appears (instead of the default day/date/time message) on the top line of the telephone display at idle extensions 10 and 11.

After correcting the problem that caused the failure, you can clear the Backup-Failure Alarm using the following procedure. (See Figure 2-3 on page 2-23 for the location of special programming buttons such as (System Program) and (Enter) on system phones.)

1. Press (Feature) (0) (0) (System Program) (System Program) (#) (1) (2) (3).
   The current setting is displayed.
2. Press (3) to choose Option 3, "Backup Alarm Cleared."

NOTE:
You cannot use (Next Data) or (Prev Data) in this procedure to choose Option 3.

3. Exit programming mode.

NOTE:
Using Option 3 to clear a Backup-Failure Alarm does *not* change the setting for **Backup Programming—Automatic (#123)**. It remains either Active or Not Active.

Problems with System Phones

System Phone Does Not Ring

Possible Cause 1: Ringer volume is set too low.

What to do: Press the volume control button while the phone is idle and the handset is in the cradle.

- If the phone rings increasingly louder, the problem is solved.
- If the phone still does not ring, go to Possible Cause 2.

Possible Cause 2: The Do Not Disturb or Call Forwarding feature is turned on.

What to do: Check to see if **Do Not Disturb** or **Call Forwarding** is turned on.

- If Do Not Disturb or Call Forwarding is turned on, turn it off.
- If Do Not Disturb or Call Forwarding is not turned on, go to Possible Cause 3.

Possible Cause 3: Line Ringing is programmed for No Ring or Delayed Ring.

What to do: Check the **Line Ringing** setting for the extension.

- If Line Ringing is set for No Ring or Delayed Ring, change the setting if appropriate.
- If Line Ringing is set for Immediate Ring and this phone is part of a combination extension, see "Problems with Combination Extensions" on page 6-23
- If Line Ringing is set for Immediate Ring and the phone is on an extension by itself, go to Possible Cause 4.

Possible Cause 4: Phone is faulty.

What to do: Unplug the cord from the base of the problem phone. Then plug the cord into a phone that you know rings properly.

- If the replacement phone rings properly, the problem phone is defective. Call the hotline* to arrange for a replacement.
- If the replacement phone does not ring properly, call the hotline*.

* In the continental U.S., help is available at 1 800 628-2888. Outside the continental U.S., call your Lucent Technologies Representative or local authorized Dealer.

System Phone Does Not Work

Possible Cause 1: Telephone cord is plugged into wrong jack on bottom of system phone.

What to do: Plug the modular telephone cord into the correct jack—see the *PARTNER Advanced Communications System Installation* guide for instructions.

- If the phone works properly, the problem is solved.
- If the problem remains, go to Possible Cause 2.

Possible Cause 2: Phone needs to be reset.

What to do: Unplug the cord from the base of the problem phone. With the handset hung up, plug the cord in again.

- If the phone works properly, the problem is solved.
- If the problem remains, go to Possible Cause 3.

Possible Cause 3: The telephone is defective.

What to do: Unplug the cord from the base of the problem phone. Then plug the cord into a phone that you know works.

- If the replacement phone works, the problem phone is faulty. Call the hotline* to arrange for a replacement.
- If the replacement phone does not work, go to Possible Cause 4.

Possible Cause 4: The telephone cord is defective.

What to do: Unplug the cord from the base of the phone and the wall jack. Replace the cord with a cord that you know works.

- If the phone works, the cord is faulty. Call the hotline* to arrange for a replacement.
- If the phone does not work and it is part of a combination extension, see "Problems with Combination Extensions" on page 6-23, Possible Cause 3.
- If the phone does not work and it is not part of a combination extension, call the hotline.*

* In the continental U.S., help is available at 1 800 628-2888. Outside the continental U.S., call your Lucent Technologies Representative or local authorized Dealer.

Display Shows Only 16 Characters Per Line

Possible Cause: A power outage occurred.

What to do: Unplug the modular telephone cord from the phone then plug it in again. If the display is still incorrect, see "System Phone Does Not Work" on page 6-9.

Display Is Incorrect

Possible Cause: Date, day, and time are not set properly.

What to do: Re-enter the date, day, and time using **System Date (#101), System Day (#102),** and System Time (#103).

- If the display is correct, the problem is solved.
- If the display is still not correct, see "System Phone Does Not Work" on page 6-9.

Display Shows "ReplaceSysBat W/Power On" or "ChgBat W/PowerOn" at Extensions 10 and 11

Possible Cause: System battery power is low.

What to do: Replace the system batteries (see "Battery Replacement" on page 6-3).

Display Does Not Show Caller ID Name/Number

Possible Cause 1: Not receiving **Caller ID** service from local phone company.

What to do: Contact your local phone company to check on Caller ID service.

- If you are not receiving Caller ID service, subscribe to it.
- If you are receiving Caller ID service, go to Possible Cause 2.

Possible Cause 2: Extension connected to a module that does not support Caller ID.

What to do: Make sure lines with Caller ID service are connected to a PARTNER ACS processor module, or 206EC, 308EC, or 400EC modules. If Caller ID lines are not connected to one of these modules, install the appropriate modules and/or make the appropriate connections.

Possible Cause 3: Someone activated **Call Coverage**.*What to do:* Check the system phone display.

- If “Coverage Call for XX” (where XX is the extension that activated the Call Coverage) displays, the call is a coverage call. Call Coverage displays the extension number of the person who activated the feature rather than Caller ID information.
- If “Coverage Call for XX” does not display, call the hotline.

“Priv.” Is Displayed Instead of Caller ID Information

Possible Cause: The caller used a star code, *67, to block Caller ID information or has instructed their telephone company to block Caller ID information.

What to do: Nothing; this is the normal operation for these conditions.

“- - - - - - - - - - - -” Is Displayed Instead of Caller ID Information

Possible Cause: The call originated outside the area for which the phone company can provide Caller ID information.

What to do: Nothing; this is normal operation for the Caller ID service.

Some Caller ID Information Does Not Display

Possible Cause: Not all calls on Caller ID lines are displayed. This varies by local phone company.

What to do: If Caller ID information for a large number of calls is not displayed, contact your local telephone company.

Intercom Autodialer Does Not Work Properly

Possible Cause 1: Telephone cord is plugged into wrong jack on bottom of Intercom Autodialer.

What to do: Plug the modular telephone cord into the correct jack—see the *PARTNER Advanced Communications System Installation* guide for instructions.

- If the Intercom Autodialer works properly, the problem is solved.
- If the problem remains, go to Possible Cause 2.

Possible Cause 2: Intercom Autodialer is not receiving auxiliary power.

What to do: Make sure the Intercom Autodialer is plugged into an electrical outlet.

- If the Intercom Autodialer works properly, the problem is solved.
- If the problem remains, go to Possible Cause 3.

Possible Cause 3: The cord is defective.

What to do: Unplug the cord from the base of the Intercom Autodialer and the wall jack. Replace the cord with a cord that you know works.

- If the Intercom Autodialer works, the cord is faulty. Call the hotline* to arrange for a replacement.
- If the Intercom Autodialer does not work, call the hotline.*

* In the continental U.S., help is available at 1 800 628-2888. Outside the continental U.S., call your Lucent Technologies Representative or local authorized Dealer.

Problems with Standard Phones

Standard Phone Does Not Ring

Possible Cause 1: Ringer is turned off.

What to do: Turn on the ringer.

- If the phone rings, the problem is solved.
- If the phone still does not ring, go to Possible Cause 2.

Possible Cause 2: Call Forwarding is turned on.

What to do: Check to see if **Call Forwarding** is turned on.

- If Call Forwarding is turned on, turn it off.
- If Call Forwarding is not turned on, go to Possible Cause 3.

Possible Cause 3: Line Ringing is programmed for No Ring or Delayed Ring.

What to do: Check the **Line Ringing** setting for the extension.

- If Line Ringing is set for No Ring or Delayed Ring, change the setting if appropriate.
- If Line Ringing is set for Immediate Ring and this phone is part of a combination extension, see "Problems with Combination Extensions" on page 6-23.
- If Line Ringing is set for Immediate Ring and the phone is on an extension by itself, go to Possible Cause 4.

Possible Cause 4: Phone is faulty.

What to do: Unplug the problem phone. Plug in a standard phone that you know rings properly.

- If the replacement phone rings properly, the problem phone is defective. Replace it.
- If the replacement phone does not ring properly, call the hotline*.

* In the continental U.S., help is available at 1 800 628-2888. Outside the continental U.S., call your Lucent Technologies Representative or local authorized Dealer.

Standard Phone Rings Back after Intercom Call with No One at Other End

Possible Cause 1: The switchhook is accidentally pressed and released, causing a call to ring back.

What to do: Be sure that the handset is always replaced carefully. If the problem is not solved, go to Possible Cause 2.

Possible Cause 2: Automatic Line Selection is programmed incorrectly.

What to do: If one of the phones involved is a standard single-line rotary or touch-tone telephone, set its **Automatic Line Selection** to intercom first. If the problem is not solved, call the hotline.*

* In the continental U.S., help is available at 1 800 628-2888. Outside the continental U.S., call your Lucent Technologies Representative or local authorized Dealer.

Standard Phone's Message Waiting Light Does Not Light

Possible Cause 1: The standard phone is part of a combination extension which includes a system phone that has Background Music on.

What to do: Check to see if the system phone has **Background Music** on. A standard phone's message waiting light will not light if Background Music is on at the system phone.

- If Background Music is on, turn it off. If the standard phone's message waiting light lights properly, the problem is solved.
- If Background Music is not on, go to Possible Cause 2.

Possible Cause 2: The standard phone's message waiting light is not compatible with the system.

What to do: See ''Standard Telephones'' on page 1-15 for a list of supported standard phones with message waiting lights. Also check with your Lucent Technologies Representative or local Authorized Dealer to find out if there are others.

- If the phone is not supported, you can use it without message waiting capability.
- If the phone is supported, go to Possible Cause 3.

Possible Cause 3: The standard phone is not connected to the proper module.

What to do: Make sure the phone is connected to a PARTNER Advanced Communications System processor module, 308EC, or a R3.1 or later 206 module in a system with a PARTNER ASC processor module. If the problem is not solved, call the hotline.*

* In the continental U.S., help is available at 1 800 628-2888. Outside the continental U.S., call your Lucent Technologies Representative or local authorized Dealer.

Other Problems with Phones

Trouble Making Outside Calls

Trouble making outside calls could be one of the following:

- You hear a dial tone, but the dial tone continues as you try to dial.
- You hear a dial tone, which cuts off when you dial, but the line does not ring.
- You hear a busy signal as you dial.
- You hear nothing at all.

Possible Cause 1: Forced Account Code Entry is assigned to the extension.

What to do: Find out if **Forced Account Code Entry (#307)** is assigned to the extension. If it is, enter a valid account code.

- If you can make a call, the problem is solved.
- If Forced Account Code Entry is not assigned, go to Possible Cause 2.

Possible Cause 2: Dial Mode is set incorrectly.

What to do: Find out if you have touch-tone or rotary service. Then set the **Dial Mode (#201)** to Touch-Tone or Rotary as appropriate.

- If you can make a call, the problem is solved.
- If the Dial Mode is set correctly, go to Possible Cause 3.

Possible Cause 3: Someone changed the Outgoing Call Restriction setting for the extension.

What to do: If calls could be made without trouble before, find out if someone changed the **Outgoing Call Restriction (#401)** for the extension.

- If someone changed the Outgoing Call Restriction setting, verify that the change was an appropriate one.
- If no one changed the Outgoing Call Restriction setting, go to Possible Cause 4.

Possible Cause 4: Station Lock was used to lock the extension.

What to do: Use **Station Unlock** from extension 10 to unlock the extension.

- If you can make a call, the problem is solved.
- If the extension was not locked, go to Possible Cause 5.

Possible Cause 5: Local phone company is not accurately receiving the dialing signals.

What to do: Isolate the problem. Use the telephone to make calls on different lines. Then, make calls on different phones using the same line.

- If you cannot make calls from one phone on all lines, follow the procedure for “System Phone Does Not Work,” Possible Cause 2.
- If you cannot make calls using different phones, go to Possible Cause 6.

Possible Cause 6: Too many standard devices are trying to dial simultaneously. (If the problem is on a system phone, go to Possible Cause 7.)

What to do: Stay on the line and wait for dial tone, or try to call later.

- If you can make a call, you may want to increase the number of touch-tone receivers by adding 206 (1 receiver), 400 (2 receivers), or 308EC (6 receivers) modules to avoid future problems. Call the hotline.*
- If you wait 30 seconds and still do not hear a dial tone, go to Possible Cause 7.

Possible Cause 7: Local phone company line is faulty.

What to do: One at a time, unplug each outside line from each 206, 308EC, 400, and 200 module in the control unit. Then plug each line into a standard telephone and try to make a call.

- If the trouble occurs on the standard phone, try another line cord; if the trouble persists, report it to your local phone company.
- If the trouble does not occur on the standard phone, the trouble is with your control unit. Call the hotline.*

* In the continental U.S., help is available at 1 800 628-2888. Outside the continental U.S., call your Lucent Technologies Representative or local authorized Dealer.

Trouble Making Outside Calls from Pool Buttons on Pooled Extensions

Trouble making outside calls from a pool button could be one of the following:

- You hear nothing at all.
- You hear a dial tone, but the dial tone continues as you try to dial.
- You hear a dial tone, and the dial tone cuts off when you try to dial.
- You hear a reorder or busy signal if you try to dial a pool access code (880, 881, 882, or 883) at intercom dial tone.
- You notice that the red light next to a pool button is on steady most or all of the time, indicating that the pool is busy.

Possible Cause 1: Forced Account Code Entry is assigned to the extension.

What to do: Find out if **Forced Account Code Entry (#307)** is assigned to the extension. If it is, enter a valid account code.

- If you can make a call, the problem is solved.
- If Forced Account Code Entry is not assigned, go to Possible Cause 2.

Possible Cause 2: Dial Mode is set incorrectly.

What to do: Find out if you have touch-tone or rotary service. Then set the **Dial Mode (#201)** to Touch-Tone or Rotary as appropriate for all lines in the pool.

- If you can make a call, the problem is solved.
- If the Dial Mode is set correctly, go to Possible Cause 3.

Possible Cause 3: Someone changed the Pool Access Restriction setting for the extension.

What to do: If calls could be made without trouble before, find out if someone changed the **Pool Access Restriction (#315)** for the extension.

- If someone changed the Pool Access Restriction setting, verify that the change was an appropriate one.
- If no one changed the Pool Access Restriction setting, go to Possible Cause 4.

Possible Cause 4: The pool may not be assigned to the extension.

What to do: Check **Pool Extension Assignment (#314)** to see if the pool is assigned to the extension.

- If the pool is not assigned, assign it.
- If the pool is assigned, go to Possible Cause 5.

Possible Cause 5: Not enough lines are assigned to the pool to support usage.

What to do: Check **Pool Line Assignment (#207)** to see if an appropriate number of lines are assigned to the pool.

- If an appropriate number of lines are not assigned, you may need to add more lines.
- If an appropriate number of lines are assigned, go to Possible Cause 6.

Possible Cause 6: One or more local phone company lines in the pool are faulty.

What to do: At extension 10, try to access each individual line assigned to the pool.

- If the lines accessed from individual line buttons on extension 10 are still faulty, refer to Possible Cause 7 in “Other Problems with Phones: Trouble Making Outside Calls.”
- If the problem remains, call the hotline.*

* In the continental U.S., help is available at 1 800 628-2888. Outside the continental U.S., call your Lucent Technologies Representative or local authorized Dealer.

Calls Are Answered Automatically

A call rings once, then disappears as if it were answered.

Possible Cause 1: Automatic System Answer or Direct Extension Dial is turned on.

What to do: Check to see if Automatic System Answer or Direct Extension Dial is turned on.

- If Automatic System Answer or Direct Extension Dial is turned on, turn it off by pressing the programmed button at extension 10.
- If Automatic System Answer or Direct Extension Dial is not turned on, go to Possible Cause 2.

Possible Cause 2: An auxiliary device answers when it should not (this could occur with a fax machine, voice messaging system, answering machine, or modem).

What to do: Be sure the device is set to answer correctly. If the device answers before it should, adjust it to answer on a later ring. If the device should not answer calls at all, turn off its auto-answer feature. Refer to the device's user manual.

- For every auxiliary device connected to your system, *either* set the device itself to answer on a later ring (when the **Line Ringing** for the device's extension is set to Immediate Ring) *or* set the extension's Line Ringing to Delayed Ring. For a voice messaging system, check all of the settings associated with it. Refer to the documentation package with your voice mail system for complete details on installing, programming, and using your system. Refer to the documentation with your voice messaging system for complete details. If the auxiliary device no longer answers calls automatically, the problem is solved.
- If the problem remains, call the hotline.*

* In the continental U.S., help is available at 1 800 628-2888. Outside the continental U.S., call your Lucent Technologies Representative or local authorized Dealer.

Trouble Hearing Called Party Answer

Possible Cause 1: If you are using a speakerphone, there may be environmental factors that affect the performance of the speaker or microphone (for example, too much background noise).

What to do: See "Speakerphone Performance Tips" on page 3-10 for suggestions on the proper use of the speakerphone. If the problem is not solved, go to Possible Cause 2.

Possible Cause 2: If the system is set for touch-tone dialing, you may have a faulty phone or cord. See "System Phone Does Not Work" on page 6-9. If the system is set for rotary dialing, the Rotary Dialing Timeout interval is too long.

What to do: Reset the interval using **Rotary Dialing Timeout (#108).**

- If you can hear the called party answer, the problem is solved.
- If the problem is not solved, call the hotline.*

* In the continental U.S., help is available at 1 800 628-2888. Outside the continental U.S., call your Lucent Technologies Representative or local authorized Dealer.

Automatically Dialed Calls Beginning with Star Codes Are Misrouted

Possible Cause: The Star Code Dial Delay setting is not inserting a long enough pause, allowing a portion of the phone number to be dialed before the second dial tone from the Central Office is established.

What to do: Use **Star Code Dial Delay (#410)** to increase the Star Code Dial Delay setting.

Using the Recall Feature Has No Effect

Possible Cause: Recall Timer Duration setting is too short.

What to do: Increase the **Recall Timer Duration (#107)** by 100 milliseconds.

- If the Recall feature works, the problem is solved.
- If the Recall feature still does not work, continue increasing the Recall Timer Duration by increments of 100 milliseconds until the problem is solved.

Using the Recall Feature Disconnects Call

This problem applies when the system is installed behind a PBX or Centrex system or with the local phone company's "Call Waiting" feature.

Possible Cause: Recall Timer Duration setting is too long.

What to do: Decrease the **Recall Timer Duration (#107)** by 100 milliseconds.

- If the Recall feature works properly, the problem is solved.
- If the Recall feature still disconnects calls, continue decreasing the Recall Timer Duration by increments of 100 milliseconds until the problem is solved.

Problems with Combination Extensions

Phone Does Not Work Properly

Possible Cause 1: Ringer equivalents are too high for the extension.

What to do: Be sure the total of the two devices' Ringer Equivalence Numbers (REN) does not exceed 2.0. If it does, unplug one of the devices.

- If the phone works properly, the problem is the REN was too high.
- If the phone still does not work properly, go to Possible Cause 2.

Possible Cause 2: Auxiliary device (such as a fax, answering machine, or modem) is faulty.

What to do: Remove the auxiliary device from the extension. Then plug in an auxiliary device that you know works properly.

- If the phone works properly, the problem is the auxiliary device. Replace the auxiliary device.
- If the phone still does not work properly, go to Possible Cause 3.

Possible Cause 3: Phone is plugged into the wrong jack of the system phone or the bridging adapter.

What to do: Plug the phone into the correct jack—see the *PARTNER Advanced Communications System Installation* guide for instructions.

- If the phone works properly, the problem is solved.
- If the problem remains, go to Possible Cause 4.

Possible Cause 4: Wrong bridging adapter is used in combination extension.

What to do: First, unplug the bridging adapter from the wall jack. Then, unplug the phone from the adapter and plug the phone directly into the wall jack.

- If the phone works, there is a problem with the bridging adapter. Replace the bridging adapter (use only a Lucent Technologies 267F2 bridging adapter). If the problem persists, call the hotline.*
- If the phone still does not work properly, call the hotline.*

* In the continental U.S., help is available at 1 800 628-2888. Outside the continental U.S., call your Lucent Technologies Representative or local authorized Dealer.

Problems with Standard Devices

Standard Device Does Not Answer

Possible Cause: A standard device (such as a fax machine or answering machine) does not answer intercom calls or transferred calls because it does not recognize the distinctive ringing pattern used by the system.

What to do: Change the extension's setting for **Distinctive Ring (#308)** to Not Active, so the extension uses the same ringing for intercom and transferred calls as it does for outside calls.

- If the device works properly, the problem is solved.
- If the problem remains, call the hotline.*

Standard Device Does Not Dial Out Properly

Possible Cause: A standard device with autodialing (such as a modem) does not recognize the intercom dial tone generated by the system.

What to do: Change the setting for **Intercom Dial Tone (#309)** for the extension to Machine, so the system generates outside line dial tone for the extension.

- If the device works properly, the problem is solved.
- If the problem remains, call the hotline.*

Call Records Wrap on SMDR Printout

Possible Cause: **SMDR Talk Time (#611)** is set to Active and **SMDR Output Format (#610)** is set to 24 digits, causing the combined length of the fields for a call record to be greater than the 80 characters supported by your printer.

What to do: Reduce the font size or increase the characters-per-inch setting for the printer.

- If the call records print without wrapping to the next line, the problem is solved.
- If the problem remains, change the output format back to 15 digits.

* In the continental U.S., help is available at 1 800 628-2888. Outside the continental U.S., call your Lucent Technologies Representative or local authorized Dealer.

Problems with Automatic Backup

Display Shows "Backup Failed:Insert Card" at Idle Extensions 10 and 11

Possible Cause: The system did not detect a valid Backup/Restore PC Card while trying to do an automatic backup.

What to do: Power down the system, insert a valid Backup/Restore PC Card in PC Card Slot 2 of the PARTNER ACS processor module, and reapply power to the system. The backup is rescheduled for the next day at 2:00 a.m.

Enter **Backup Programming—Automatic (#123)** and select Option 3 to clear the alarm display (see "Clearing a Backup-Failure Alarm" on page 6-7).

Display Shows "Backup Failed:Write Prot" at Idle Extensions 10 and 11

Possible Cause: The Backup/Restore PC Card in the PC Card slot is write-protected, and an automatic backup was attempted.

What to do: Using the end of a paper clip or another pointed object, push the write-protect tab upward to the nonprotected position (see Figure 6-6). You do not need to remove the card from the processor to slide the write-protect tab up.The backup is rescheduled for the next day at 2:00 a.m.

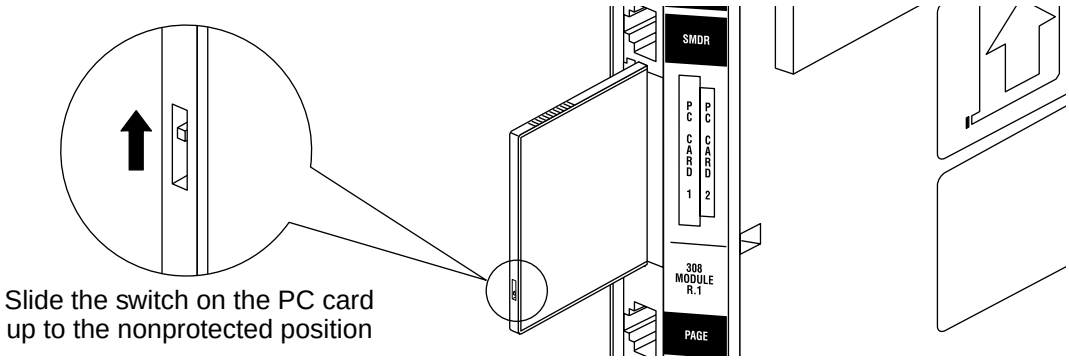

Figure 6-6. Write-Protect Tab on a Backup/Restore PC Card

Enter **Backup Programming—Automatic (#123)** and select Option 3 to clear the alarm display (see "Clearing a Backup-Failure Alarm" on page 6-7).

Display Shows "Backup Failed:Check Card" at Idle Extensions 10 and 11

Possible Cause 1: The Backup/Restore PC Card was removed while the backup was in progress.

What to do: Check to see whether the PC Card was removed. If it was not, go to Possible Cause 2. If it was, power down the system, reinsert the PC Card, and reapply power to the system. The backup is rescheduled for the next day at 2:00 a.m.

Enter **Backup Programming—Automatic (#123)** and select Option 3 to clear the alarm display (see "Clearing a Backup-Failure Alarm" on page 6-7).

Possible Cause 2: The Backup/Restore PC Card or the PARTNER ACS processor module is corrupted.

What to do: Try to do a backup using the manual backup procedure— **Backup Programming—Manual (#124**)—to test the system.

- If the backup completes successfully, the problem may be solved. An automatic backup is rescheduled for the next day at 2:00 a.m. Enter **Backup Programming—Automatic (#123)** and select Option 3 to clear the alarm display (see "Clearing a Backup-Failure Alarm" on page 6-7).
- If the backup fails, try to determine whether the problem is a corrupted PC Card or a corrupted processor module by trying the backup twice using two different Backup/Restore PC Cards:
  - If the system will not write to either PC Card, the processor module is probably corrupted; call the hotline*.
  - If the system writes to one of the PC Cards, the original PC Card is corrupted. See Figure B-1 on page B-7 for information about ordering a new Backup/Restore PC Card.

Display Shows "Backup Failed:SystemBusy" at Idle Extensions 10 and 11

Possible Cause: Changes were being made to system programming or central telephone programming while a backup was in progress.

What to do: The backup is rescheduled for the next day at 2:00 a.m. Enter **Backup Programming—Automatic (#123)** and select Option 3 to clear the alarm display (see "Clearing a Backup-Failure Alarm" on page 6-7).

---

* In the continental U.S., help is available at 1 800 628-2888. Outside the continental U.S., call your Lucent Technologies Representative or local authorized Dealer.

Problems with Manual Backup

Display Shows “Insert Valid Card” in System Programming Mode

Possible Cause: The system did not detect a valid Backup/Restore PC Card when you tried to do *a* manual backup using **Backup Programming—Manual (#124)**.

What to do: Power down the system, insert a valid Backup/Restore PC Card in PC Card Slot 2 of the PARTNER ACS processor module, and reapply power to the system. Restart the procedure.

Display Shows “Card is Write Protected” in System Programming Mode

Possible Cause: You tried to do a manual backup using **Backup Programming—Manual (#124)**, but the Backup/Restore PC Card in the PC Card slot is write-protected.

What to do: Using the end of a paper clip or another pointed object, gently push the write-protect tab upward to the nonprotected position (see Figure 6-7), and try the procedure again. (You do not need to remove the card from the processor to slide the write-protect tab up.)

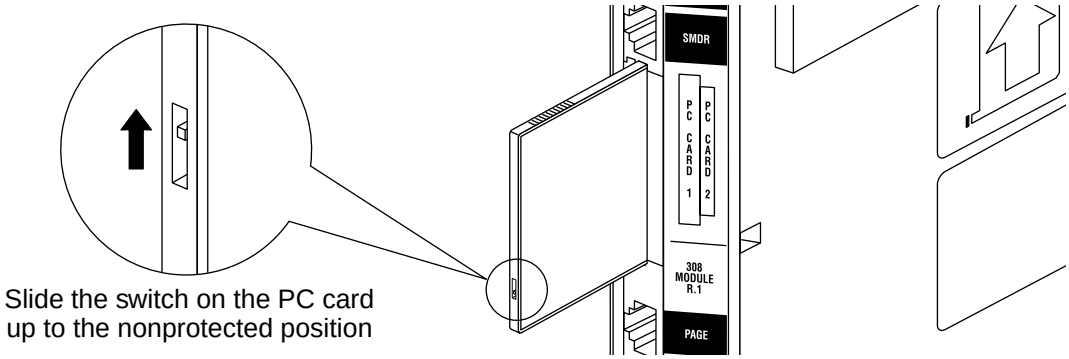

Figure 6-7. Write-Protect Tab on a Backup/Restore PC Card

Display Shows “System Busy” in System Programming Mode

Possible Cause: An automatic or manual backup was in progress at the time you requested a manual backup.

What to do: Exit the procedure and retry the manual backup after a few minutes.

Display Shows “Backup Failed:Check Card” in System Programming Mode

Possible Cause 1: The Backup/Restore PC Card was removed while the backup was in progress.

What to do: Check to see whether the PC Card was removed. If it was not, go to Possible Cause 2. If it was, power down the system, reinsert the PC Card, and reapply power to the system. Restart the **Backup Programming—Manual (#124)** procedure.

Possible Cause 2: The Backup/Restore PC Card or the PARTNER ACS processor module is corrupted.

What to do: Try the backup again using the backup procedure— **Backup Programming—Manual (#124**).

- If the backup completes successfully, the problem is solved.
- If the backup fails again, try to determine whether the problem is a corrupted PC Card or a corrupted processor module by trying the backup twice using two different Backup/Restore PC Cards:
  - — If the system will not write to either PC Card, the processor module is probably corrupted; call the hotline*.
  - — If the system writes to one of the PC Cards, the original PC Card is corrupted. See Figure B-1 on page B-7 for the information about ordering a new Backup/Restore PC Card.

Display Shows “Backup Failed:SystemBusy” in System Programming Mode

Possible Cause: Changes were being made to system programming or central telephone programming while a backup was in progress.

What to do: Try **Backup Programming—Manual (#124)** later when the system is idle or during nonbusiness hours.

Problems with System Restore

Display Shows “Insert Valid Card” in System Programming Mode

Possible Cause: The system did not detect a valid Backup/Restore PC Card when you tried to do a restore using **Restore Programming (#125)**.

What to do: Power down the system, insert a valid Backup/Restore PC Card in PC Card Slot 2 of the PARTNER ACS processor module, and reapply power to the system. Restart the procedure.

Display Shows “Bad File - Try Again” in System Programming Mode

Possible Cause: You attempted a restore and the file was corrupted.

What to do: Try **Restore Programming (#125)** again with a different backup file. Remember to power down the system before you insert or remove Backup/Restore PC Cards.

Display Shows “Empty File” in System Programming Mode

Possible Cause: You selected a file named AUTO.****** or MAN.****** for the restore. The file is empty; no backups have been stored in it yet.

What to do: Try **Restore Programming (#125)** again using a file created during a backup procedure. Remember to power down the system before you insert or remove Backup/Restore PC Cards.

Display Shows “Incompatible Versions” in System Programming Mode

Possible Cause: You attempted to restore a file that was created with an incompatible software release.

What to do: Try **Restore Programming (#125)** again using a backup file that was created with the current software release.

Display Shows “Restore Failed-Try Again” for Two Seconds in System Programming Mode

NOTE:
This display indicates that all system and telephone programming has reverted to the default settings.

Possible Cause 1: The Backup/Restore PC Card was removed while the restore was in progress.

What to do: Check to see whether the PC Card was removed. If it was not, go to Possible Cause 2. If it was, power down the system, reinsert the Backup/Restore PC Card, reapply power to the system, and restart the **Restore Programming (#125)** procedure.

Possible Cause 2: The backup file is corrupted.

What to do: Retry the **Restore Programming (#125)** procedure. If you get the same result, try again using a different backup file from the same Backup/Restore PC Card or a file from a different Backup/Restore PC Card. Remember to power down the system before you insert or remove Backup/Restore PC Cards.

System Programming Settings Reverted to Default Settings

Possible Cause: You ran the **Restore Programming (#125)** procedure, but the restore failed.

What to do: See Possible Causes 1 and 2 under “Display Shows ‘Restore Failed-Try Again’ for Two Seconds in System Programming Mode."

Display Shows “Restore Complete,” but All Calls Were Disconnected

Possible Cause: You just ran the **Restore Programming (#125)** procedure.

What to do: Nothing. This is normal behavior after a restore; the system resets itself. In the future, warn users before beginning the restore, or perform the restore during nonbusiness hours.

System Problems

Call Rings Continuously; When Answered, No One at Other End

Possible Cause: Automatic System Answer or Direct Extension Dial is used on a system that does not support far end disconnect.

What to do: Call your local phone company and find out whether they support far end disconnect. If the local phone company does not support far end disconnect, you should not set the **Automatic System Answer Mode (#121)** to either Hold or Ring and you should not use the Direct Extension Dial feature. If the local phone company supports far end disconnect but the problem still occurs, call the hotline.*

Calls on Hold Are Disconnected

Possible Cause: Hold Disconnect Time setting is too short.

What to do: Change **Hold Disconnect Time (#203)** to a longer interval.

- If calls on hold no longer disconnect, the problem is solved.
- If calls on hold still get disconnected, or the Hold Disconnect Time was already set to the longest interval, call the hotline.*

Calls on Automatic System Answer Lines Are Disconnected

Possible Cause: Automatic System Answer Mode is set to Disconnect.

What to do: Change **Automatic System Answer Mode (#121)** from Disconnect to either Hold or Ring.

- If calls on Automatic System Answer lines no longer disconnect, the problem is solved.
- If calls on Automatic System Answer lines still get disconnected, or the Automatic System Answer Mode already was set to Hold or Ring, call the hotline.*

* In the continental U.S., help is available at 1 800 628-2888. Outside the continental U.S., call your Lucent Technologies Representative or local authorized Dealer.

Call on Hold Hangs Up, but Line Does Not Disconnect

Possible Cause 1: Hold Disconnect Time setting is too long.

What to do: Change **Hold Disconnect Time (#203)** to a shorter interval.

- If abandoned calls on hold are disconnected, the problem is solved.
- If abandoned calls on hold still do not disconnect, or if the Hold Disconnect Time was already set to the shortest interval, go to Possible Cause 2.

Possible Cause 2: Local phone company does not send hold release signal.

What to do: Call your local phone company and find out whether they send a hold release signal. If the local phone company does not send a hold release signal, or if they do but the problem still occurs, call the hotline.*

All Calls Disconnected

Possible Cause 1: You just ran the **Restore Programming (#125)** procedure.

What to do: This is normal behavior after running **Restore Programming (#125)**; the system resets itself. In the future, warn users before beginning the restore, or perform the restore during nonbusiness hours. If you did not run **Restore Programming (#125)**, go to Possible Cause 2.

Possible Cause 2: Power was interrupted to the control unit.

What to do: Make sure the control unit's power cord is plugged securely into the wall outlet. Also make sure the on/off switch is in the "ON" position ("O") if you have a 5-Slot carrier.

- If the green LEDs on the modules are lit and the trouble is gone, the problem is corrected.
- If the green LEDs on the modules are lit but the trouble remains, call the hotline.*
- If the green LEDs on the modules are out, go to Possible Cause 2 in "All Phones Dead: No Dial Tone or Lights."
- If any green LEDs on the modules are flashing, call the hotline.*

* In the continental U.S., help is available at 1 800 628-2888. Outside the continental U.S., call your Lucent Technologies Representative or local authorized Dealer.

All Phones Dead: No Dial Tone or Lights

Possible Cause 1: Control unit is not receiving power.

What to do: Make sure the control unit's power cord is plugged securely into the wall outlet. Also make sure the on/off switch is in the "ON" position ("O") if you have a 5-Slot carrier.

- If the green LEDs on the modules are lit and the trouble is gone, the problem is corrected.
- If the green LEDs on the modules are lit but the trouble remains, call the hotline.*
- If the green LEDs on the modules are out, go to Possible Cause 2.
- If any green LEDs on the modules are flashing, call the hotline.*

Possible Cause 2: The power outlet is faulty.

What to do: Test the outlet by plugging in an appliance, like a lamp or radio.

- If the appliance does not work, the outlet is faulty. If possible, plug the control unit into a different outlet. Then check the fuse box or call an electrician.
- If the appliance works, call the hotline.*

Multiple Phones Dead: No Dial Tone or Lights

Possible Cause 1: The LED on one system module is out.

What to do: If the green LED on the front of a module is out, try reseating the module in the control unit.

- If the LED lights, the problem is corrected.
- If the problem remains, call the hotline.*

Possible Cause 2: The green LEDs on several system modules are out.

What to do: If the LEDs on the front of several system modules are out, try reseating the leftmost module of the ones with the lights out (see "Replacing System Modules" in the *PARTNER Advanced* Communications System *Installation* guide).

- If the LEDs light, the problem is corrected.
- If the problem remains, call the hotline.*

---

* In the continental U.S., help is available at 1 800 628-2888. Outside the continental U.S., call your Lucent Technologies Representative or local authorized Dealer.

Poor Transmission Quality on Modem

Possible Cause: A high-speed modem is connected through an extension jack on the control unit to a standard Central Office telephone line; but the line quality is not sufficient to generate a clear signal when the modem transmits through the system interface.

What to do: Either connect the modem directly to the network interface jack for a line, or contact your local telephone company for information about upgrading the line quality.

- If the device works properly, the problem is solved.
- If the problem remains, call the hotline.*

Other Problems with System

The following procedure resets the system. Use it when you have any problems that are not covered elsewhere in this chapter. The procedure disconnects all calls in progress, but does not erase any system settings, ***provided that the system batteries are installed and not low on power***.

Possible Cause: System needs a hardware reset.

What to do: Unplug the control unit's power cord from the wall. Wait 10 seconds, then plug it back in. If the problem remains, call the hotline.*

* In the continental U.S., help is available at 1 800 628-2888. Outside the continental U.S., call your Lucent Technologies Representative or local authorized Dealer.

Specifications

A

Capacities

System	Module	Extension Jack
• 19 outside lines via line jacks on one ACS processor module plus two 206 modules plus four 400 modules • 40 extensions via extension jacks on one ACS processor module plus four 308EC modules • 1 loudspeaker paging system via PAGE jack on ACS processor module • 1 audio source via MUSIC ON HOLD jack on ACS processor module (RCA phono plug required) • 1 call reporting device via SMDR jack on ACS processor module (335 A/F adaptor required) • 1 Contact Closure Adjunct using CONTACT CLOSURE jack on ACS processor module • 2 doorphones, using two extension jacks • 1 voice messaging system-PARTNER MAIL VS, which uses a slot in the 2- or 5- Slot carrier, or PARTNER MAIL, which connects to either 3 or 5 extension jacks	**ACS Processor Module** • 3 outside lines • 8 extensions • 2 touch-tone receivers except when used with 308EC module • 2 power-failure transfer extensions **206 Module** • 2 outside lines • 6 extensions • 1 touch-tone receiver • 1 power-failure transfer extension **308EC Module** • 3 outside lines • 8 extensions • 6 touch-tone receivers • 2 power-failure transfer extensions **400 Module** • 4 outside lines • No extensions • 2 touch-tone receivers	• Maximum two devices per extension jack, total REN on jack not to exceed 2.0 [System phone REN is 0.0(zero)] **Note:** The two devices combined on an extension jack can be a system phone with a standard device, or two standard devices. DO NOT connect two system phones to the same extension jack. If a device lists two RENs, use the higher number when adding up the RENs. • No more than one system phone per jack *For programming, a system display phone must be connected to extension 10 or 11.*

Dimensions and Weights (approx.)

● Processor Module	11"(D) x 17" (H) x 1.5" (W) or 27.9 x 43.2 x 3.8 cm	4.5 lbs or 2 kgs
● 206 module	11"(D) x 17" (H) x 1.5" (W) or 27.9 x 43.2 x 3.8 cm	4.5 lbs or 2 kgs
● 308EC module	11"(D) x 17" (H) x 1.5" (W) or 27.9 x 43.2 x 3.8 cm	4.5 lbs or 2 kgs
● 400 module	11"(D) x 17" (H) x 1.5" (W) or 27.9 x 43.2 x 3.8 cm	4.5 lbs or 2 kgs
● 2-Slot carrier	2" (D) x 9.75" (H) x 5.5" (W) or 5.1x 24.8 x14 cm	1.0 lbs or .46 kgs
● 5-Slot carrier	12" (D) x 19" (H) x 11" (W) or 30.5 x 48.3 x 27.9 cm	5.5 lbs or 2.5 kgs
● PARTNER-34D phone	9.8 " (D) x 3.75" (H) x 9.3" (W) or 24.9 x 9.5 x 23.6 cm	2.7 lbs or 1.2 kgs
● PARTNER-18D phone	9.8 " (D) x 3.75" (H) x 7.9" (W) or 24.9 x 9.5 x 20.1 cm	2.4 lbs or 1.1 kgs
● PARTNER-18 phone	9.8 " (D) x 3.75" (H) x 7.9" (W) or 24.9 x 9.5 x 20.1 cm	2.3 lbs or 1.0 kgs
● PARTNER-6 phone	9.8 " (D) x 3.75" (H) x 6.1" (W) or 24.9 x 9.5 x 15.5 cm	1.9 lbs or 0.9 kgs
● PARTNER-CA48 Autodialer	9.8 " (D) x 3.75" (H) x 6.1" (W) or 24.9 x 9.5 x 15.5 cm	1.5 lbs or 0.7 kgs

Switch Fabric	● Full digital, nonblocking
Electrical Specifications	● 35 Watts (120 BTUs/hr.) per ACS processor module during normal power consumption ● 45 Watts (154 BTUs/hr.) per ACS processor module during normal power consumption ● 10 Watts (35 BTUs/hr.) per 400 module, normal and maximum power consumption ● 25 Watts (90 BTUs/hr.) per 206 module during normal power consumption ● 35 Watts (120 BTUs/hr.) per 308EC module during normal power consumption ● 30 Watts (105 BTUs/hr.) per 308EC module during normal power consumption ● 40 Watts (140 BTUs/hr.) per 308EC module during maximum power consumption ● U.S., Canada, and other 110V countries: —ACS processor module and one 206 module (2-Slot carrier) = 2.3 Amps max. current, full system capacity —ACS processor module and four 206 modules (5-Slot carrier) = 4 Amps max. current, full system capacity ● Countries using 220V: —ACS processor module and one 206 module (2-Slot carrier) = 1.2 Amps max. current, full system capacity —ACS processor module and four 206 modules (5-Slot carrier) = 2 Amps max. current, full system capacity ● 45 days to 6 months memory backup with 2 AAA-size standard alkaline batteries (IEC LR03)

Processor Module Specifications	● 68306 16 Mhz processor ● 256Kbyte RAM ● 512Kbyte FLASH ROM ● Custom VLSI DSP ASIC—16bit, 52 Mhz —VLSI = Very Large Scale Integration —DSP = Digital Signal Processor —ASIC = Application Specific Integrated Circuit
Extension Jack Specifications (206 module)	● Ringing voltage: +5VDC, -140 VDC peak to peak; trapezoidal wave shaping ● 35- to 38-Volt talk battery ● Ringing frequency: 20 Hz
Extension Jack Specifications (ACS Processor and 308EC module)	● Ringing voltage: +55VRMS Balanced ringing within a trapezoidal wave shaping ● 38- to 42-Volt talk battery ● Ringing frequency: 20 HZ
PAGE Jack Specifications	● Draws current on inner wire pair ● Provides paging contact closure on outer wire pair ● 600 Ohm impedance
MUSIC ON HOLD Jack Specifications	● Accepts 2 Volts at 50 Kohms maximum input ● 0 - 18 dB attenuation
CONTACT CLOSURE Adjunct Jack Specifications	● Operates up to 150 feet (45.72 meters) from control unit using 24 gauge solid conductor wire if 2 Contact Closures used; up to 800 feet (243.84 meters) from control unit using 24 gauge solid conductor wire if only 1 Contact Closure used ● Install the Contact Closure Adjunct in the same building as the control unit; cannot be installed out-of-doors ● Has three terminals per Contact Closure, providing a normally open and normally closed function for each Contact Closure ● Maximum contact voltages and current: —30 VAC, 1 Amp —50 VDC, 1 Amp

SMDR Output Format	• 1200 baud • 8 data bits • XON/XOFF protocol • Line feeds • No parity • 2 stop bits • Carriage return
Environmental Requirements -Control Unit	• Mount on a wall at least 2 feet (0.6 meters) from the floor (wall mounting required) • Locate within 5 feet (1.5 meters) of the network interface jacks and a properly grounded electrical outlet not controlled by a switch, using supplied 7-foot (2.1-meter) cords • Operating temperature 32° to + 104°F (0° to + 40°C), not in direct sunlight • Humidity 15%-90%, noncondensing • For proper ventilation and easy replacement of modules, provide the following minimum clearance around the control unit: —*5-Slot carrier:* 1 foot (0.3 meter) clearance at the top and sides and 2 feet (0.6 meter) at the front and bottom —*2-Slot carrier or Standalone ACS processor module:* 1 foot (0.3 meter) clearance at the front, top and right side, and 2 feet (0.6 meter) at the bottom and left side • Locate in an area free of excess moisture, corrosive gases, dust, and chemicals
Electrical Requirements -Control Unit	• U.S. and Canada: 90-264 VAC, 47-63 Hz, 3-prong outlet separate ground, separately fused at 15 Amps • Other countries: 90-264 VAC (220 VAC fused at 10 Amps) • Grounding to comply with Underwriters Laboratories (UL) 1459: A. An insulated grounding conductor that is not smaller in size and equivalent in insulation material and thickness to the grounded and ungrounded branch circuit supply conductors, except that it is green with or without one or more yellow stripes, is to be installed as part of the circuit that supplies the product or system B. The grounding conductor mentioned in item A is to be connected to ground at the service equipment C. The attachment-plug receptacles in the vicinity of the product or system are all to be of a grounding type, and the grounding conductors serving these receptacles are to be connected to earth ground at the service equipment
Requirements for Out-of-Building Installations	• Installation of a telephone or other standard (tip/ring) device in another building requires the following In-Range-Out-Of-Building (IROB) protectors to protect the control unit and device from electrical surges: —System phone: two Lucent Technologies IROB protectors —Standard phone: one Lucent Technologies IROB protector plus one carbon block protector • Installation of a Contact Closure Adjunct controlled device outside the building requires a Lucent Technologies 146G Surge Protector-SCL/8 to protect the control unit from electrical surges

Wiring	● System phones: Lucent Technologies SYSTIMAX® Bulk Nonplenum (DIW) cable, Lucent Technologies SYSTIMAX Bulk Plenum (HALAR/HALAR) cable, or at least 2-pair (4-wire) star ("home run" not "loop") ● Other standard telecommunications equipment (single-line phones, fax machines, answering machines, etc.): 1-pair (2-wire) mounting cords (Lucent Technologies D2R mounting cords recommended) ● Bridging adapter: Lucent Technologies 267F2 ● Range: 1,000 feet (305 meters) for system phones; 3,000 feet (915 meters) for standard devices
Safety Requirements	● U.S.: Meets UL 1459 Issue 2 ● Canada: Meets CSA C22.2, 225 ● All other countries: Meets IEC950 Second Edition and EN60950 Second Edition
Government Approvals and Local Phone Company Information	● U.S.: FCC Part 68 FCC registration number (U.S.): See the label on the side of the control unit. FCC Part 15: *Class A:* 5-Slot Configuration 2-Slot Configuration with 308EC or PARTNER MAIL VS *Class B:* PARTNER Advanced Communications System Standalone Configuration 2-Slot Configuration with 200, 206, or 400 module plus ACS processor module REN (outside line jack): 0.9A per line jack Jack type: RJ11C Loop start lines ● Canada: IC CP01, Issue 7 IC registration number (Canada): See the label on the side of the control unit. IC CS03, Issues 6 & 7 Load Number = 7 Loop start lines

Maintenance, Repair, and Ordering Information

B

Maintenance

Your system is designed to provide trouble-free performance without any special maintenance procedures. To reduce the risk of accidental damage:

- Keep the system modules in an area free of dust, smoke, and moisture, and do not block the air vents by placing objects on top of the control unit.
- Do not place telephones near a heating duct, radiator, or other heat source, and do not drop or expose them to excessive shock or vibration.
- Unplug the telephone if its cord is damaged, if liquid is spilled into it, or if its housing becomes cracked or otherwise damaged.
- To clean your telephone, wipe the outside housing with a soft, dust-free cloth. If absolutely necessary, you may use a cloth *slightly* dampened with a mild soap and water solution. Dry quickly with a soft cloth.

CAUTION:
Your telephone contains sensitive electronic parts. Never submerge it in any kind of liquid, and never use detergents, alcohols, solvents, abrasive cleaners, or an excessive amount of water when cleaning the housing and faceplate. To do so could result in irreparable damage.

Repair Information

Outside the continental U.S., contact your Lucent Technologies Representative or local Authorized Dealer for warranty and repair information applicable to your system.

In-Warranty Repairs

If you purchased or leased your system directly from Lucent Technologies, Lucent Technologies will repair it free of charge during the one-year warranty period. Simply call the hotline and ask for service.

Business-Day service is standard during the warranty period for both the control unit and system phones. Business-Day service is performed during normal business hours. However, if you need 24-hour service protection during the warranty period on the control unit in case there is a major system failure, you can purchase an Around-the-Clock service contract from your local Lucent Technologies sales office (1 800 247-7000 in the continental U.S. only). (Around-the-Clock service is not available for phones.)

If you purchased or leased your system through a Lucent Technologies Authorized Dealer, contact your dealer for repairs.

Post-Warranty Repairs

If you purchased your system from Lucent Technologies and you have a post-warranty service contract, Lucent Technologies service is provided under the terms of that contract.

To significantly reduce unexpected repair costs after the warranty period, you can purchase a post-warranty service contract from Lucent Technologies. If you do not have a contract, Lucent Technologies service is provided on a time-and-materials basis by calling the hotline. A contract provides to you, within the applicable coverage period and response times, service calls with no charge for parts and labor on covered repairs. Both Business-Day and Around-the-Clock coverages of varying lengths are available. To order a post-warranty service contract, call 1 800 247-7000 (in the continental U.S. only).

If you leased your system under a Term Plan from Lucent Technologies, Business-Day service is included in your lease. To upgrade to Around-the-Clock service, call 1 800 247-7000 (in the continental U.S. only). (Around-the-Clock service is not available for phones.)

If you purchased or leased your system through a Lucent Technologies Authorized Dealer, contact your dealer for repairs.

Lucent Technologies Limited Warranty and Limitation of Liability

Lucent Technologies warrants to you, the customer, that your system will be in good working order on the date Lucent Technologies or its authorized reseller delivers or installs the system, whichever is later (“Warranty Date”). If you notify Lucent Technologies or its authorized reseller within one year of the Warranty Date that your system is not in good working order, Lucent Technologies will without charge to you repair or replace, at its option, the system components that are not in good working order. Repair or replacement parts may be new or refurbished and will be provided on an exchange basis. If Lucent Technologies determines that your system cannot be repaired or replaced, Lucent Technologies will remove the system and, at your option, refund the purchase price of your system or apply the purchase price towards the purchase of another Lucent Technologies system.

If you purchased your system directly from Lucent Technologies, Lucent Technologies will perform warranty repair in accordance with the terms and conditions of the specific type of Lucent Technologies maintenance coverage you selected. A written explanation of Lucent Technologies' types of maintenance coverage may be obtained from Lucent Technologies by calling 1 800 247-7000 (in the continental U.S. only). If you purchased your system from a Lucent Technologies authorized reseller, contact your reseller for the details of the maintenance plan applicable to your system.

This Lucent Technologies limited warranty covers damage to the system caused by power surges.

Unless otherwise expressly agreed to in a written agreement signed by Lucent Technologies, Lucent Technologies will not be responsible under this limited warranty for damages resulting from:

- Failure to follow Lucent Technologies' installation, operation, or maintenance instructions;
- Unauthorized system modification, movement, or alteration;
- Unauthorized use of common carrier communication services accessed through the system;
- Abuse, misuse, or negligent acts or omissions of the customer and persons under the customer's control; or
- Acts of third parties and acts of God.

For warranted items that were not installed by Lucent Technologies (self-installed), and are not covered by a Service Protection Plan, the means of warranty fulfillment on the product is to ship the replacement item to you, or at Lucent Technologies' discretion, to dispatch a technician to repair or replace the product.

Lucent Technologies' OBLIGATION TO REPAIR, REPLACE, OR REFUND, AS SET FORTH ABOVE, IS YOUR EXCLUSIVE REMEDY.

EXCEPT AS SPECIFICALLY SET FORTH ABOVE, Lucent Technologies, ITS AFFILIATES, SUPPLIERS, AND DEALERS MAKE NO WARRANTIES, EXPRESS OR IMPLIED, AND SPECIFICALLY DISCLAIM ANY WARRANTIES OF MERCHANTABILITY OR FITNESS FOR A PARTICULAR PURPOSE.

Limitation of Liability

Except as provided below, the liability of Lucent Technologies and its affiliates and suppliers for any claims, losses, damages, or expenses from any cause whatsoever (including acts or omissions of third parties), regardless of the form of action, whether in contract, tort, or otherwise, shall not exceed the lesser of: (1) the direct damages proven; or (2) the repair cost, replacement cost, license fee, annual rental charge, or purchase price, as the case may be, of the equipment that directly gives rise to the claim. Except as provided below, Lucent

Technologies and its affiliates and suppliers shall not be liable for any incidental, special, reliance, consequential, or indirect loss or damage incurred in connection with the equipment. As used in this paragraph, consequential damages include, but are not limited to, the following: lost profits, lost revenues, and losses arising out of unauthorized use (or charges for such use) of common carrier telecommunications services or facilities accessed through or connected to the equipment. For personal injury caused by Lucent Technologies' negligence, Lucent Technologies' liability shall be limited to proven damages to person. No action or proceeding against Lucent Technologies or its affiliates or suppliers may be commenced more than twenty-four (24) months after the cause of action accrues. THIS PARAGRAPH SHALL SURVIVE FAILURE OF AN EXCLUSIVE REMEDY.

Product Ordering Information

Reference Materials

In addition to this guide, the following materials are available (the order numbers are in parentheses):

- *PARTNER Advanced Communications System Planner* (518-456-151) provides the forms needed to plan and record how your system and telephones are to be programmed.
- *PARTNER Advanced Communications Installation* (518-456-152) provides instructions for installing the system.
- *User Instruction Cards* (518-456-340) contains basic instructions for using system phones.
- *PARTNER-34D Programming Overlay* (847531696) helps with System Programming from a PARTNER-34D phone.
- *PARTNER-18D Programming Overlay* (847531688) helps with System Programming from a PARTNER-18D phone.
- *MDW 9030P Wireless Pocketphone Installation and Use* (503-801-160) explains how to install and use the MDW 9030P pocketphone.
- *MDW 9030P Wireless Pocketphone Quick Reference* (503-801-161) contains basic information for using the MDW 9030P pocketphone.
- *MLC-6 Cordless Telephone Installation* (999-506-143) explains how to install the MLC-6 cordless telephone.
- *MLC-6 Cordless Telephone Quick Reference* (999-506-146) contains basic information for using the MLC-6 cordless telephone.
- *PARTNER MAIL VS Voice Messaging System Release 3 Installation and Programming* (518-322-105) provides instructions for installing, programming, and maintaining your PARTNER MAIL VS system.

- *PARTNER MAIL VS Voice Messaging System Release 3 Planning Forms* (585-322-504) provides the forms needed to plan and record how your PARTNER MAIL VS system is to be programmed.
- *Using the PARTNER MAIL VS Voice Messaging System Release 3* (518-322-106) contains instructions for using the PARTNER MAIL VS system.
- *PARTNER MAIL Voice Messaging System Release 3 Planning, Installation, and Use* (585-322-516) provides instructions for planning, installing, programming, and maintaining your PARTNER MAIL system.
- *PARTNER MAIL Voice Messaging System Release 3 Planning Forms* (585-322-517) provides the forms needed to plan and record how your PARTNER MAIL system is to be programmed.
- *PARTNER MAIL Voice Messaging System Release 3 User's Guide* (585-322-518) contains instructions for using the PARTNER MAIL system.
- *PARTNER Voice Messaging PC Card Installation, Programming and Use* contains instructions for installing, programming and using the PARTNER ACS voice messaging system (ACS Release 1.1 or later).

Some of these materials also are available in Spanish and French. For more information, or to order materials, contact the Lucent Technologies BCS Publications Center at 1 800 457-1235 or 1 317 361- 5353 or your Lucent Technologies Representative or local Authorized Dealer.

Hardware Components

Ordering additional telephones and modules, accessories, and replacement parts for your system is convenient. Table B-1 shows where you can buy system components in the continental United States.

To take full advantage of your system, the sources shown below also can provide you with the optional equipment you might want for your system, such as Lucent Technologies fax machines, answering machines, standard phones, voice messaging systems, modems, paging systems, doorphones, headsets, bells, lights, strobes, music-on-hold systems, and printers.

You can obtain most items from more than one source, either directly from Lucent Technologies or from authorized dealers. Sources in the U.S. are:

- **Lucent Technologies Catalog Sales.** This source is Lucent Technologies' national phone/mail sales center in Cincinnati. A Catalog Associate will place your order, including Lucent Technologies installation if you need it. You can charge your order on a VISA, Mastercard, or American Express card. The Catalog Associate can also give you sales advice and mail you the Lucent Technologies SOURCEBOOK CATALOG of systems, telephones, and accessories. Call 1 800 451- 2100.

- **Lucent Technologies Sales Offices.** Sales offices to serve the small business customer are located throughout the country. To contact the office closest to you, call 1 800 247-7000. A representative will place your order, including Lucent Technologies installation if you need it.
- **Lucent Technologies Authorized Dealers.** You can also buy most items from one of Lucent Technologies' authorized dealers. Check your local telephone directory's yellow pages for the Lucent Technologies Authorized Dealer nearest you.
- **Lucent Technologies National Parts Sales Center.** This national sales center, located in Denver, stocks replacement parts. Telephone orders can be placed by calling 1 800 222-7278.

In Canada, order these items from Lucent Technologies Canada:

Eastern Canada and Ottawa: 514 335-7200

Ontario: 1 416 756-5236

Central and Western Canada: 1 800 561-5165

To use Table B-1, first locate the item you want. A triangle (▲) indicates where you can obtain it.

Table B-1. Sources of Additional Equipment and Replacement Parts (U.S.)

System Modules and Wiring	SOURCE (U.S.)			
	Lucent Direct Catalog Sales (800) 451-2100	Lucent Technologies Sales Office (800) 247-7000	Lucent Technologies Authorized Dealer *	Lucent Technologies National Parts Sales Center (800) 222-7279
PARTNER ACS Processor module Includes module, three 7-ft. line cords, and installation instructions	▲	▲	▲	▲
Line/Extension module (206E) Includes module, two 7-ft. line cords, and installation instructions	▲	▲	▲	▲
Line/Extension module (308E) Includes module, two 7-ft. line cords, and installation instructions	▲	▲	▲	▲
Line module (400E/200E) Includes module, four 7-ft. line cords, and installation instructions	▲	▲	▲	▲
2-Slot Carrier	▲	▲	▲	▲
5-Slot Carrier	▲	▲	▲	▲
Cover for 5-Slot Carrier	▲	▲	▲	▲
AC power cord			▲	▲
Line cord (D8R) Connects 206E and 400E modules to network interface (clear color). Specify length: 7 (standard length), 14, or 25 ft.	▲		▲	▲
257R2 bridging adapter Connects two devices to one extension	▲		▲	▲
In-Range Out-of-Building (IROB) protector Required when installing extensions in another building from the control unit (two required per PARTNER-model telephone, one per standard phone or device)		▲	▲	▲
Lucent Technologies 146G Surge Protector–SCL/8 Required when installing a Contact Closure–controlled device outside the building to protect the control unit from electrical surges.	▲	▲	▲	▲
2300A Electromagnetic Interference (EMI) Filter Includes filter, 7-ft. line cord, and installation instructions		▲	▲	▲
267C line adapter Splits two outside lines from an RJ14 network interface jack, so that each line has its own modular plug (do not use at extension jacks)	▲		▲	
355A/355AF adapter Connects call reporting device to primary processor module		▲	▲	

*To locate the nearest Lucent Technologies Authorized Dealer, check your local telephone directory's yellow pages.

Continued on next page

To use Table B-1, first locate the item you want. A triangle (▲) indicates where you can obtain it.

Table B-1. — *Continued*

System Telephones and Accessories	SOURCE (USA)			
	Lucent Direct Catalog Sales (800) 451-2100	Lucent Technologies Sales Office (800) 247-7000	Lucent Technologies Authorized Dealer *	Lucent Technologies National Parts Sales Center (800) 222-7279
PARTNER-34D corded telephone	▲	▲	▲	
PARTNER-18D corded telephone	▲	▲	▲	
PARTNER-18 corded telephone	▲	▲	▲	
PARTNER-6 corded telephone	▲	▲	▲	
Backup/Restore PC Card	▲	▲	▲	▲
ASA/DXD Announcement PC Card (PARTNER ACS Release 2.0 and later only)	▲	▲	▲	▲
PARTNER Answering Machine PC Card (PARTNER ACS Release 1.1 and later only)	▲	▲	▲	▲
Software Upgrade Card (PARTNER ACS Release 1.1, 2.0 and later)	▲	▲	▲	▲
Contact Closure Adjunct	▲	▲	▲	▲
PARTNER-CA49 Intercom Autodialer	▲	▲	▲	
Button label package (specify telephone model)	▲		▲	▲
Button label package (PARTNER-CA49 Intercom Autodialer)	▲		▲	▲
Handset (AB1A) Standard for PARTNER-model phones	▲		▲	▲
Amplified handset (K65) Optional for hard-of-hearing users with PARTNER-model phones	▲	▲	▲	▲
Handset cord, 9 ft., coiled Connects handset to telephone	▲		▲	▲
Telephone mounting cord (D4BU) Connects phone to wall jack, jack panel, or 205E module ext. jack. Specify length: 2, 7, or 14 ft.	▲		▲	▲
Modular telephone extension cord—8-connector Extends the D4BU mounting cords Specify length: 14, 25, 50, 75, or 100 ft.	▲		▲	

* To locate the nearest Lucent Technologies Authorized Dealer, check your local telephone directory's yellow pages.

Speed Dial Form

C

Speed Dial Form

This appendix contains a Speed Dial Form to be photocopied and handed out to system users. It provides space for System and Personal Speed Dial numbers. For instructions on programming and using System and Personal Speed Dial numbers, see Chapter 5.

We suggest that you fill in a *photocopy* of the form, leaving the blank original in the book, in case you need to distribute revisions in the future.

To Dial • On a system phone, press (Feature) + **Code** • On a standard phone, press (#) + **Code** while receiving intercom dial tone.

System Speed Dial Numbers

Code	Name/Company	*	Telephone Number
600			
601			
602			
603			
604			
605			
606			
607			
608			
609			
610			
611			
612			
613			
614			
615			
616			
617			
618			
619			
620			
621			
622			
623			
624			
625			
626			
627			
628			
629			
630			
631			
632			
633			

Code	Name/Company	*	Telephone Number
634			
635			
636			
637			
638			
639			
640			
641			
642			
643			
644			
645			
646			
647			
648			
649			
650			
651			
652			
653			
654			
655			
656			
657			
658			
659			
660			
661			
662			
663			
664			
665			
666			

Code	Name/Company	*	Telephone Number
667			
668			
669			
670			
671			
672			
673			
674			
675			
676			
677			
678			
679			
680			
681			
682			
683			
684			
685			
686			
687			
688			
689			
690			
691			
692			
693			
694			
695			
696			
697			
698			
699			

* You can dial System Speed Dial codes with a (*) at any time, regardless of dialing restrictions placed on your extension. System Speed Dial numbers are programmed by the System Manager (report problems and suggested revisions to your System Manager).

To Dial • On a system phone, press (Feature) + **Code** • On a standard phone, press (#) + **Code** while receiving intercom dial tone. **Extension** _____

Personal Speed Dial Numbers

Code	Name/Company	Telephone Number
80		
81		
82		
83		
84		
85		
86		
87		
88		
89		

Code	Name/Company	Telephone Number
90		
91		
92		
93		
94		
95		
96		
97		
98		
99		

To program Personal Speed Dial Numbers, see the *Quick Reference*.

Programming Mixed Telephone Types

D

Overview

This appendix provides information about programming from a PARTNER-34D phone to MLS-model phones and from an MLS-34D phone to PARTNER-model phones. In these situations, you should be aware that the button that you press at extension 10 or 11 (the programming extension) is likely to be in a different location than the button on the phone to which the programming applies (the target phone). If you are programming from a PARTNER-18D or MLS-18D phone, the button locations are the same.

You can use the illustrations in this appendix to facilitate programming from one telephone type to the other. Figure D-1 shows the buttons on the PARTNER-34D Programming Overlay and the relative location of those buttons on each MLS-model phone. Figure D-2 shows the buttons on the MLS-34D Programming Overlay and the relative location of those buttons on each PARTNER-model phone. (The letters on the PARTNER-34D Overlay in Figure D-1 are printed on the Overlay. To help you program from an MLS-34D phone, you may want to write the letters shown on the MLS-34D Overlay in Figure D-2 on your Overlay.)

If you want to program features on specific buttons at target phones, it is recommended that you:

1. Look at the figure with the overlay that matches the phone at your programming extension.
2. Find the location of the button in the picture of the target phone.
3. Note the letter associated with that particular button.
4. Find the letter in the picture of the Programming Overlay.
5. Press that button on the programming extension.

For example, if you are using a PARTNER-34D phone at extension 10 and you want to program Do Not Disturb on the top, leftmost button of an MLS-18D phone: refer to Figure D-1; find the top, leftmost button on the MLS-18D phone; then press the button labeled M on the PARTNER-34D Programming Overlay.

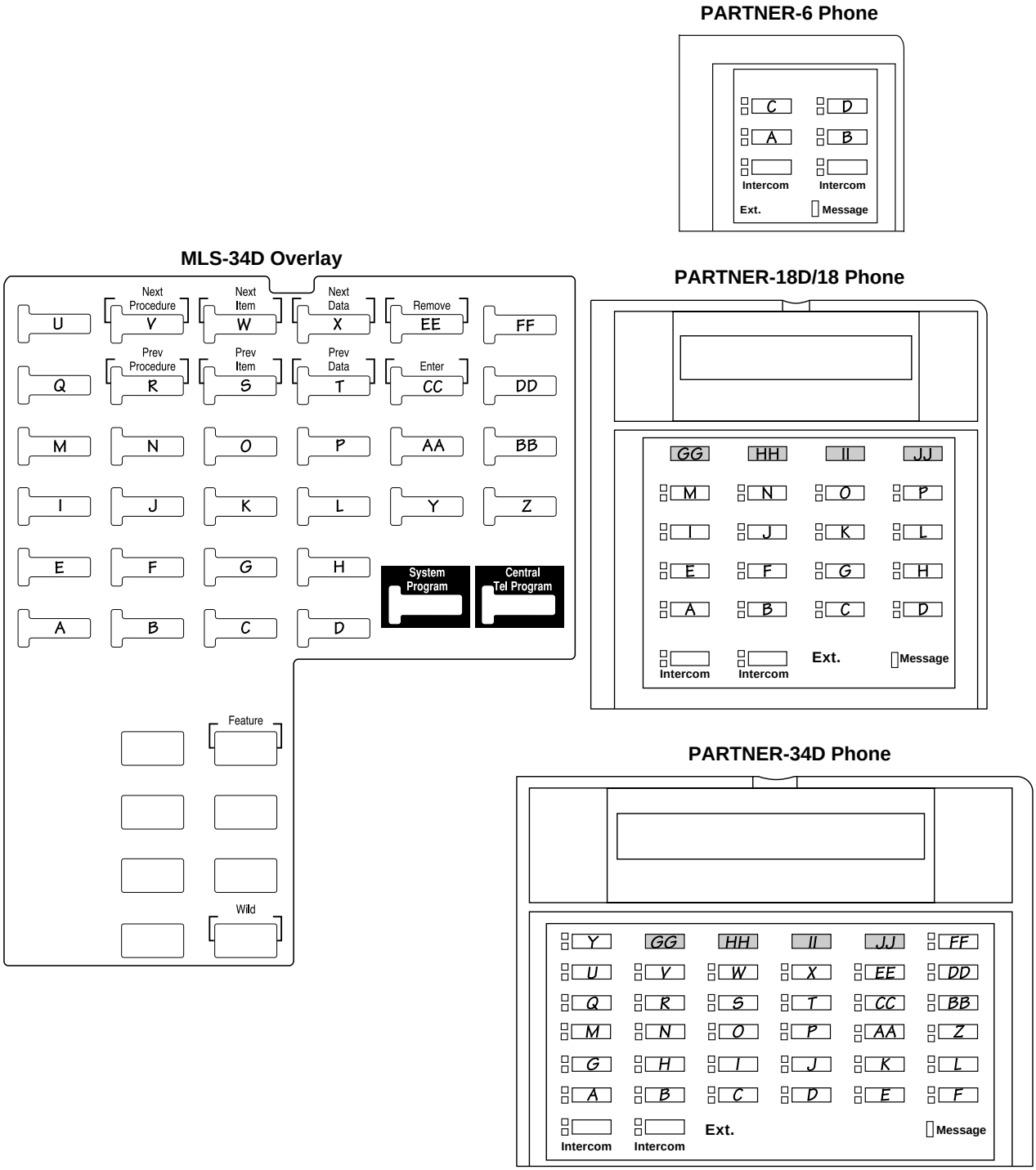

Figure D-1. Programming from a PARTNER-34D Phone

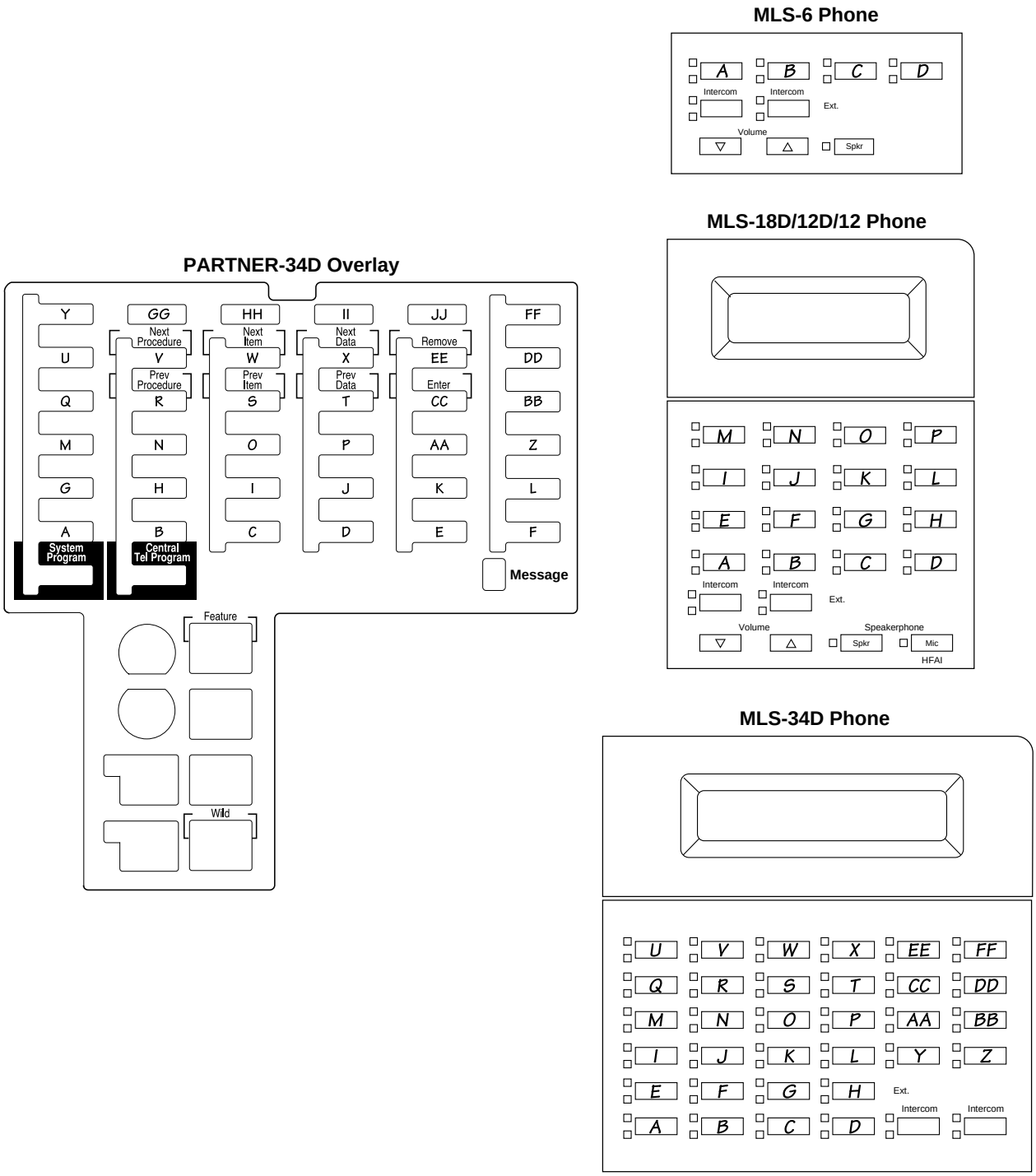

Figure D-2. Programming from an MLS-34D Phone

Glossary

A

Account code

A code of up to 16 digits that is associated with incoming or outgoing telephone calls. Entry of an account code may be optional or forced. If entered, an account code appears on the call record for a call. *See also* Call report, Forced Account Code Entry, and Forced Account Code List.

Auto Dial button

A programmable telephone button that lets you dial a series of digits simply by pressing that button. An Auto Dial button can be used to store a feature code, a phone number, or an account code so that it can be dialed with one touch. *See also* Programmable button.

Auto Attendant

An optional device that answers calls and routes them to the appropriate extension based on caller responses to a recorded announcement.

Automated Attendant Service

A voice messaging system feature that answers calls and routes them to the appropriate extension based on caller responses to a recorded announcement. *See also* Auto Attendant and Voice messaging system (VMS).

Automatic System Answer (ASA)—Release 2.0 or later

An optional system feature that causes incoming calls to be answered by the system if the receptionist cannot answer within a specified number of rings. The system plays a brief announcement and places the call on hold, continues ringing, or disconnects the call. See Direct Extension Dial. See also Automatic System Answer/Direct Extension Dial PC Card.

Automatic System Answer/Direct Extension Dial PC Card—Release 2.0 or later

A Lucent Technologies proprietary PC Card (purchased separately) that is used like a floppy disk to store Automatic System Answer/Direct Extension Dial messages. See Automatic System Answer and Direct Extension Dial. See also PC Card.

Auxiliary equipment

Telecommunications equipment (other than system phones) that can be connected to the control unit. Auxiliary equipment includes industry-standard devices that can connect directly to the public telephone network (such as standard phones or fax machines) as well as devices that require the interface provided by the control unit (such as a loudspeaker paging system).

B

Background Music

A feature that provides background music through the speaker of an idle system phone for a user's work area. Background Music plays the pre-recorded material from the Music On Hold audio source.

Backup

The system and telephone programming settings can be saved on a Backup/Restore PC Card using either of two features: Backup Programming— Automatic (#123) or Backup Programming—Manual (#124).

Backup/Restore PC Card

A Lucent Technologies proprietary PC Card that is used like a floppy disk to back up system and telephone programming settings and to restore these settings if they become corrupted. This card must be inserted in the PARTNER ACS processor module before you use the system's backup or restore features [Backup Programming— Automatic (#123), Backup Programming—Manual (#124), or Restore Programming (#125)]. *See also* PC Card.

C

Call Answer Service

A voice messaging system feature that lets callers leave a message at an unanswered extension or transfer themselves to another extension.

Call Assistant

See Intercom Autodialer.

Call Coverage—Release 2.0 or later

A feature that lets users send their intercom and transferred calls and calls on their owned lines to a covering extension when they are unable to answer calls.

Call Park

A feature that lets a user put a call on a special type of hold, so it can be picked up from any extension in the system.

Call record

A line of information on a call report that includes data fields such as call type, date, time, called/caller number, and call duration. *See also* Account code and Call report.

Call report

A page of information that begins with a header and lists incoming and outgoing calls to and from your business on a call-by-call basis. *See also* Call record and Call reporting.

Call reporting

A feature that provides records of call activity. Call reporting also is referred to as Station Message Detail Recording or SMDR.

Call Waiting

A feature that lets standard phone users receive notification of a second incoming call when they are busy on a call. The user can press the switchhook to put the first call on hold and answer the second call.

Caller ID

A feature that displays an incoming caller's number (or name) on a system display phone. To get Caller ID, you must subscribe to the service (if it is available) from your local phone company and connect Caller ID lines to the appropriate system modules.

Caller ID Inspect

A feature that allows you to view incoming Caller ID or Call Coverage information on other lines while active on a call, without placing the call on hold or hanging up.

Caller ID Logging and Dialing— Release 2.0 or later

A feature that allows you to log and view Caller ID information and to return logged calls using a dial button. *See also*, Caller ID.

Caller ID Name/Number

A feature that allows you to toggle between a caller's Caller ID name and Caller ID number.

Caller ID service

A subscription service available from some local telephone companies, providing the telephone number and/or name of the caller on lines that have the service.

Calling Group

A group of extensions that can be called simultaneously by dialing a group calling code. *See also* Hunt Group.

Calling restriction

A feature that lets you control telephone use at specific extensions.

Centralized Telephone Programming

A method of telephone programming that lets you program individual extensions in the system from a system display phone at extension 10 or extension 11. Centralized Telephone Programming is an alternative to Extension Programming.

CO Line

See Line.

Combination extension

An extension that has two devices connected to it. Combination extensions can connect two standard devices or a standard device and a system phone, but not two system phones.

Contact Closure button

A phone button that is programmed to activate one of the two Contact Closures on the Contact Closure Adjunct to control an auxiliary device such as a door lock.

Control unit

Made up of a PARTNER ACS processor module, and, optionally, a 2-Slot or a 5-Slot molded plastic carrier to hold additional system modules. The 5-Slot carrier also has a cover. The control unit connects lines coming into your building to the extensions in your system, and also provides system features.

D

DGC Group

See Group Call Distribution and Hunt Group.

Direct Extension Dial—Release 2.0 or later

An optional feature that enables outside callers to dial an extension or Hunt Group directly, without waiting for the receptionist to transfer the call. See Automatic System Answer. See also Automatic System Answer/Direct Extension Dial PC Card.

Doorphone

A Lucent Technologies proprietary phone that can be wall mounted outside your office or in a lobby to allow visitors to alert any number of system extensions by pressing a button. The doorphone includes a speaker and microphone, to allow two-way conversation between the doorphone and the phone that answers.

Do Not Disturb

A feature that prevents incoming calls from ringing at an extension. *See also* Send All Calls.

E

Extension

An endpoint in the system that connects telephones or standard devices, which can be dialed using the (Intercom) button. *See also* Programming extension.

Extension jack

The location on a PARTNER ACS processor module, 206 modules, and 308EC modules that allows you to connect extension wiring to the control unit for phones (or other telecommunications devices).

Extension number

The number assigned to each extension jack on a PARTNER ACS processor module or a 206 module. Extension numbers are used for intercom calling.

Extension Name Display

A feature that lets users assign a name to their extension. The name appears along with the extension number on system display phones when users make an intercom call or a group call, or transfer a call.

Extension Programming

A method of telephone programming that lets users program their own extensions from their system phones. *See also* Centralized Telephone Programming.

External Hotline

A standard phone that is programmed to dial a predetermined outside number when a user lifts the handset. *See also* Hotline phone.

F

Fax Management button

A system phone button with lights that is programmed with the extension number of a fax machine. A user can monitor the lights next to this button to determine when the fax machine is in use, available, or not answering.

Feature phone

An industry-standard phone that includes programmable buttons or other built-in features.

Forced Account Code Entry

A system setting that forces users at specified extensions to enter an account code before making a call. *See also* Account code and Forced Account Code List.

Forced Account Code List

An optional list of account codes that the system checks when a user enters a forced account code. If the forced account code entered by the user is on the list (valid), the user gets access to an outside line; if not, the user is denied access.

400 module

The Lucent Technologies equipment component that has line jacks for connecting up to four outside lines.

G

Group Call Distribution

A system setting that automatically directs incoming calls on specific lines to a Hunt Group. *See also* Hunt Group and VMS Hunt Group.

H

Hold Reminder Tone

On system phones, a short beep that is generated for a call that is left on hold for longer than one minute. The tone sounds once every minute until the held call is retrieved, or until the caller hangs up.

Hotline phone

A standard phone at an extension which rings another extension automatically when the handset is lifted. *See also* External Hotline.

Hunt Group

A group of extensions that takes incoming or transferred calls in round-robin fashion. Calls to the hunt group go to the first available extension in the group, with the extension that answered most recently being the last one in the hunt order. *See also* Calling Group and VMS Hunt Group.

Hybrid mode—Release 2.0 or later

An operating mode in which outside lines are grouped together in pools. To access outside lines, users press pool buttons on their phones or enter the pool access code. In this mode, users do not know which lines they are using to make and receive calls. See also Key mode and System mode.

I

Industry-standard device

A telephone or other telecommunications device that can be connected directly to the public telephone network. *See also* Proprietary device and Standard phone.

Inside call

See Intercom call.

Intercom Autodialer

An auxiliary device that can be connected to the system phones at extensions 10 and 11. The device has an Auto Dial button for each extension in the system, which can be used to dial or transfer calls to the extension with one touch.

Intercom Auto Dial button

A button that is programmed to ring or page another extension whenever the button is pressed. The button can be used to call the extension or to transfer a call to the extension with one touch; the lights next to the button also show calling activity for the extension. *See also* Manual Signaling.

Intercom call

A call that is made to another system extension.

Internal call

See Intercom call.

K

Key Extension

An extension that has line buttons but not pool buttons. See also key mode and Pooled extension.

Key mode

An operating mode in which outside lines are assigned one per line button. To access outside lines, users press line buttons or enter a Direct Line Pickup code. See also Hybrid mode and System mode.

L

Line

The transmission path between your control unit and the local phone company's Central Office, used for incoming and outgoing calls.

Line button

A button with status lights on a system phone that represents a specific line for making calls. See also Key extension and Pooled extension.

Line hunting

See Group Call Distribution.

Line jack
The location on a PARTNER ACS processor module and 206 and 400 modules that allows you to connect outside lines to the control unit.

Line number
The number assigned to each line jack on a PARTNER ACS processor module, 308EC module, a 206 module, or a 400 module.

Line pooling
See Pool.

Line Reserve
A system feature that lets you reserve a busy line or pool (by pressing the busy line or pool button without lifting the handset) so your phone beeps when the line or pool becomes free.

Loudspeaker paging system
Equipment that lets you make announcements over the loudspeaker from a system extension. Any Lucent Technologies paging system can be connected to the PAGE jack on the processor module in the control unit. *See also* Simultaneous Paging.

M

Mailbox
See Voice mailbox.

Manual Signaling
A feature that lets a user signal an extension by pressing a programmed button. The phone at the target extension beeps for as long as the button is pressed. Alternatively, the Manual Signaling button can be used to ring or voice signal the target extension. *See also* Intercom Auto Dial button.

Music-on-hold system
Equipment that lets you play recorded music or messages to callers who are placed on hold. A music-on-hold audio source can be connected to the RCA jack on the processor module in the control unit. *See also* Background Music.

N

Network interface jack
A jack, generally located in your equipment room, that provides access to an outside line coming into your building from your local telephone company. A line cord from the network interface jack to a line jack on a PARTNER ACS processor module, a 308EC module, a 206 module, or a 400 module connects the line to your system.

Night Service
A feature that automatically redirects calls received after hours or when a receptionist is not available to answer calls. (This feature also activates night service operation of the voice messaging system.) *See also* Password.

O

One-touch Intercom Calling button
See Intercom Auto Dial button.

Outside line
See Line.

Outside pool
See Pool.

P

Park
See Call Park.

PARTNER ACS processor module
The Lucent Technologies equipment component that provides the software intelligence that controls the system's features. This module may be a standalone unit, or it may be installed in the center slot of the 5-Slot carrier or the leftmost slot of the 2-Slot carrier.

PARTNER Voice Messaging PC Card —Release 1.1 or later
An optional voice messaging service, provided on a PC Card, that allows users to record a greeting and callers to leave messages. Provides solutions for after-hour calls and backup for the receptionist.

PARTNER-Model Telephones
See System phones.

PARTNER-CA48 Intercom Autodialer
See Intercom Autodialer.

Password
A four-digit code assigned by the System Manager that users can enter from a PARTNER- or MLS-model phone to override dialing restrictions and to turn Night Service on and off. *See also* Night Service.

PC Card
A computer card that can be inserted in either of two PCMCIA slots on the PARTNER ACS processor module. *See also* Backup/Restore PC Card

Pickup Group
A group of extensions for which calls to any extension in the group can be picked up, from any extension in the system, by dialing a group pickup code.

Pool—Release 2.0 or later

A group of outside lines used for making and receiving calls on pooled extensions. A pool typically contains lines of a similar type or purpose (WATS, FX, etc.) and is identified by a pool access code. The system supports four pools: a main pool and three auxiliary pools. See also Hybrid mode, Pool access code, and Pooled extension.

Pool Access Code—Release 2.0 or later

A three-digit code used to access outside lines in a specific pool. The main pool and each auxiliary pool are known to the system as 880, 881, 882, and 883, respectively. Users can either dial the pool access code or press a pool button representing one of the pools to make a call.

Pool button—Release 2.0 or later

A button with status lights on a system phone that represents a specific pool for making calls. See also Pooled extension.

Pool number—Release 2.0 or later

See Pool Access Code.

Pooled extension—Release 2.0 or later

An extension in Hybrid mode that has pool buttons or pool and line buttons. See also Hybrid mode and Key extension.

Programmable button

A telephone button that does not have a line or pool assigned; it can be set up to dial a number or access a feature.

Programming

See Centralized Telephone Programming, Extension Programming, and System Programming.

Programming extension

An extension from which you can program the system; this can be either extension 10 or 11.

Proprietary device

A telephone or other device that is designed to work with a specific system, and requires a special interface to connect to the public telephone network. For example, system phones are proprietary devices that can only be used with the control unit described in this guide. *See also* Industry-standard device.

R

RAU (Remote Administration Unit)

An auxiliary device that lets you perform system programming from a remote location.

Recall

A system feature that sends a timed switchhook flash to let you “recall” a dial tone to make another call to or access a PBX or Centrex service. (Use Recall only on an outside call; using Recall on an intercom call disconnects the call.)

Reorder tone

A fast busy signal that the system transmits to an extension when a user attempts to use a feature that is not available to that extension.

Ringer Equivalence Number (REN)

A measure of the power it takes to ring a phone or other telecommunications device, usually shown on a label on the bottom of the device.

Restore

The reinstating of system and telephone programming settings that have been saved on a Backup/Restore PC Card using either Backup Programming—Automatic (#123) or Backup Programming—Manual (#124). If necessary, this backed up information can be restored using Restore Programming (#125).

S

Send All Calls

Lets you send calls immediately to Call Coverage or to the voice messaging system.

Simultaneous Paging

A feature that lets you make announcements over the loudspeaker and all idle system phones with speakers in Calling Group 1. *See also* Loudspeaker paging system.

SMDR (Station Message Detail Recording)

See Call reporting.

Speed dialing

A feature that lets a user dial a telephone number quickly by dialing a short code.

Standard phone

An industry-standard touch-tone or rotary phone such as you might have in your home. Some standard phones include special feature buttons for frequently-used calling functions. *See also* Feature phone and Industry-standard device.

Star Codes

Codes, typically dialed before an outgoing call, that provide special services from the local phone company Central Office. For example, *67 enables a dialer to block the sending of Caller ID information to the called party.

Station

See Extension.

Station Lock

A feature that lets a user lock his or her extension to prevent other users from making outside calls from the locked extension.

Station Message Detail Recording (SMDR)

See Call reporting.

Subscriber

(1) On a voice messaging system, a user who has a mailbox in the system. (2) A user who has access to an outside line with special features, such as Caller ID.

System

The Lucent Technologies control unit and system phones that you purchased, plus all other telecommunications devices that are connected to your control unit.

System Manager

The person in your business who is responsible for managing your system, including system programming.

System phones
The Lucent Technologies telephones that are specifically designed for use with PARTNER systems. Models include the PARTNER-34D, PARTNER-18D, PARTNER-18, PARTNER-6, MLS-34D, MLS-18D, MLS-12D, MLS-12, MLS-6, MLC-6, MDW 9000, MDW 9010, and MDW 9030P phones.

System Programming
Procedures that allow you to customize system settings for your business. System Programming requires a system display phone and must be done from extension 10 or 11.

System Restore
See Restore.

T

Talk-Back
See Voice Interrupt On Busy Talk-Back.

Telephone Programming
Procedures that allow you to customize extensions to meet the needs of individual users, including the assignment of features to programmable buttons. Telephone Programming can be done either centrally or from the user's own extension. *See also* Centralized Telephone Programming and Extension Programming.

308EC module
The Lucent technologies equipment component that has line jacks for connecting three outside lines and up to eight extensions to the control unit.

200 module
The Lucent Technologies equipment component that has line jacks for connecting up to two outside lines.

206 module
The Lucent Technologies equipment component that contains jacks for connecting up to two outside lines and up to six extensions.

V

Verification of Account Codes
See Forced Account Code Entry.

VMS (Voice Messaging System)
See Voice messaging system (VMS).

VMS Hunt Group
Hunt Group 7, reserved by the system to identify extensions that are associated with the voice messaging system hardware. *See also* Group Call Distribution and Hunt Group.

Voice Interrupt On Busy

A special intercom call that lets a user interrupt and speak to another user who is busy on a call. *See also* Voice Interrupt On Busy Talk-Back.

Voice Interrupt On Busy Talk-Back

A feature that lets the recipient of a voice interrupt on busy intercom call respond to the originator of that call. *See also* Voice Interrupt On Busy.

Voice Mail coverage

A voice messaging system feature that provides Call Answer Service when a call is not answered by a covered extension. *See also Call Answer Service.*

Voice Mail Service

A voice messaging system feature that lets users retrieve messages and record greetings.

Voice mailbox

A storage area for greetings and messages in a voice messaging system.

Voice messaging system (VMS)

An optional call routing and messaging device that provides call coverage by answering calls and routing them to caller designated extensions. It also lets callers leave messages at unanswered extensions and lets subscribers retrieve their messages. (The system supports the PARTNER MAIL VS system, the PARTNER MAIL system, or PARTNER Voice Messaging PC Card.)

W

Wake Up Service

A special application feature that lets the receptionist at extension 10 schedule wake up or reminder calls for specific extensions.

Index

A

AA (Automated Attendant) Extensions (#607), 5-6
Abbreviated Ringing (#305), 5-8
Accessories, B-6
Account Code Entry
  description, 5-8, 5-133, 5-135
Adding lines and extensions, 2-4
Allowed List Assignments (#408), 5-11
Allowed Phone Number Lists (#407), 5-13
Amplified handset, 4-3, B-6
Answering a call
  at your extension, 5-16
  identifying a call type by ringing pattern, 3-7, 3-12
  ringing at another extension, 5-58, 5-148
Answering machines, 4-4 - 4-8
ASA, 5-27, 5-30, 5-32, 5-36
Attendants, automated, 4-9
Attendants, automated (*see Auto Attendant)*
Authorization Codes (*see* Forced Account Code Entry (#307))
Auto Answer Intercom (*see* Hands-Free Answer on Intercom)
Auto Attendant, 4-9
Auto Attendant extensions, 5-6
Auto Dial buttons
  description, 2-29, 2-31, 5-19 - ??
  programming, 5-19, 5-20
  using, 3-14, 5-21
Auto dial buttons, 2-9
Auto Dial numbers, 5-20
Autodialer, Intercom
  description, 5-21
Autodialers, Intercom, 5-19
  description, 1-14, 2-32
  problems, 6-11
Automated Attendants (*see* Auto attendant)
Automatic Extension Privacy (#304), 5-22
Automatic Line Selection, 5-24
Automatic System Answer
  Button (#111),description, 5-27
  Delay (#110), 5-30
  Lines (#204), 5-32
  Mode (#121), 5-34
  Record/Playback, 5-36
Automatic System Answer/Direct Extension Dial PC Card, 1-8
Automatic VMS Cover (#310), 5-39
Auxiliary equipment
  example setups, 4-1 - 4-29
  overview, 1-15
  programming for, 2-17
  Requirements, 1-16
  with Night Service, 4-25

B

Background Music
  description, 5-41
Backlit display (MLS-18D only), 5-113
Backplane, B-6
Backup problems
  automatic, 6-7, 6-25 - 6-26
  manual, 6-27 - 6-28
Backup Programming
  Automatic (#123), 2-20, 5-43 - 5-45, 6-7, 6-25 - 6-26
  Manual (#124), 2-20, 5-46 - 5-47, 6-27 - 6-28
Backup/Restore PC Card, 1-3, 2-20
  inserting, 5-43 - 5-44
  problems with, 6-27
  removing, 5-43 - 5-44
Batteries, 6-3 - 6-6
Bed and Breakfast features
  Outgoing Call Restriction Button (#114), 2-15, 2-20, 5-200
  Wake Up Service Button (#115), 5-280
Bells (*see* Extra alerts)
Busy extension indication
  (*see* Light patterns)
Busy Lamp Fields (BLF) feature (*see* Light patterns)
Button label sheets, B-6
Button locations for programming at extension 10/11
  description, 2-24
Buttons
  Auto Dial, 2-12, 2-31
  intercom, 1-11, 3-4
  line, 1-11
  programming, 2-29
  system phone, 1-11

C

Call accounting (*see* Station Message Detail Recording)
Call Assistant Intercom Autodialer, 1-14, 5-19
Call Coverage, 1-3
Call Coverage (#116) Rings, 5-52
Call Coverage Rings (#105), 5-52
Call Follow-Me
  description, 5-53 - 5-55
  light patterns, 3-7
Call Forwarding
  description, 5-53 - 5-55
  light patterns, 3-7
Call handling
  features, 3-16
Call Intercept feature, 4-4
Call Park, 5-56
Call Pickup, 5-58

Call report, 4-10, 5-235 - 5-239
Call reporting devices, 4-10
Call Restriction, Outgoing (#401), 5-198
Call Waiting (#316), 5-60
Caller ID
  Call Waiting, with, 5-64
  description, 5-62
  device, 4-3
  information, viewing, 5-62, 5-65
  modules required for, 1-6
  printing information, 4-10
  SMDR, with, 5-64
Caller ID Call Logging and Dialing
  associating lines and extensions, 5-69
  description, 5-71
  dialing logged call numbers, 5-71 - 5-75
  using, 5-73
  viewing logged calls, 5-73
Caller ID Inspect, 5-65
Caller ID Name Display
  description, 5-76
Caller ID Type (#122), 5-77
Calling
  extensions simultaneously, 5-79, 5-140
  intercom (inside), 5-180
  outside, 5-178
Calling Group, 5-79
Calling Group Extensions (#502), 5-79
Capabilities, system, 1-2
Capacities,system, 1-8
Carrier
  2-Slot, 2-2
  5-Slot, 2-2
Centralized Telephone Programming, 2-1, 2-34 - 2-35
Centralized telephone programming, 2-34
Changing system settings, 2-1, 2-2, 2-8, 2-11, 2-12
Clock, changing system, 2-4, 2-9, 5-249 - 5-250, 5-258
CO Line Hunting (*see* Group Call Distribution (#206))
Combination extension
  problems with, 6-23
  using, 3-15
Components
  batteries, 1-7
  capacity, 1-8 - 1-10
  description, 1-4
  illustration, 1-5
  modules, 1-6
  PC Card slot, 1-7
  telephones, 1-13 - 1-15
Components, system
  configurations (*see* Configurations)
  description, 1-4
Conference
  call, making a, 5-81
  Conf button, 5-81
  Drop, 5-83
  limit outside participants, 5-203
  outside restriction, 5-203
Configurations
  2-Slot, 1-6, 2-2
  5-Slot, 1-6, 2-2
  extensions, maximum, 1-6, 2-2
  lines, maximum, 1-8
  overview, 1-6
  standalone, 1-4
Contact Closure
  setting up, 4-14
Contact Closure Adjunct
  description, 2-18, 4-14
Contact Closure device, 4-14
Contact Closure Group (#612), 5-86
Contact Closure jack
  description, 2-18
Contact Closure Operation Type (#613), 5-86
Contact Closures
  description, 5-84
Control unit
  illustration, 1-5
control unit
  definition, 1-4
Copy Settings (#399), 2-7, 5-90
Cordless phones, 1-14
Coverage, 5-271 - 5-273
Covering calls, 5-48
Credit card scanners, 4-15
Customer Self Service Center on the Internet, 6-1
Cycle programming method, 2-24

D

Date, System (#101), 5-249
Day, System (#102), 5-250
Dead phones, 6-33
Delayed ring, 5-174
DFT (*see* Line)
Dial Mode (#201), 5-92
Dial tone
  intercom, 3-7, 3-12, 5-158
  outside, 3-7, 3-12
  recall, 5-60, 5-218
  standard phones, 3-12
  system phones, 3-7
Dial-code features, 3-16
Dialing Restrictions and Permissions
  summary of, 2-12
Dialing restrictions and permissions
  disallowed phone numbers, 5-107, 5-109
  emergency phone numbers, 5-122
  fax machine, for, 4-18
  line access, 5-165
  long-distance, for, 5-259
  outside lines, controlling calls on, 2-15
  overriding, 2-16, 5-251, 5-255
  PBX/Centrex services, with, 2-11
  pooled extensions, for, 5-209

programming, 2-12
star codes, with, 2-12
types of outgoing calls, 5-198
Direct Department Calling (*see* Hunt Groups)
Direct Extension Dial
Button, 5-93
Button (#113), 5-93
Delay, 5-96
Delay (#112), 5-96
Lines, 5-98
Record/Playback, 5-100
Direct Extension Dial (*see* Automatic System Answer/Direct Extension Dial PC Card)
Direct Facility Termination (*see* Line)
Direct Group Calling, 5-272
Direct Line Pickup
Active Line, 5-103
Idle Line, 5-105
Direct programming method, 2-24
Direct Station Select (*see* Auto Dial buttons and Intercom Autodialer)
Disallowed List Assignments (#405), 5-107
Disallowed Phone Number Lists (#404), 5-109
Display
adjusting contrast, 5-113
assigning a name to, 5-126
extension name, 5-113, 5-126
features, 5-112
Display Language (#303), 5-114
Display phone
for programming, 2-1, 2-21, 2-34
for receptionist, 2-30
display phone
for programming, 2-24
Distinctive Ring (#308), 5-115
Do Not Disturb
description, 5-116
Doorphones
description, 4-1
Doorphone Alert Extensions (#606), 5-118
Doorphone Extensions (#604/#605), 5-120
programming for, 5-118, 5-120, 5-121
Drop, Conference, 5-83
Dropping parties from a conference call, 5-81, 5-83
DSS (*see* Auto Dial buttons and Intercom Autodialer)

E

Electromagnetic Interference filter, 4-3, B-6
Emergency Phone Number List (#406), 5-122
EMI (*see* Electromagnetic Interference filter)
Exclusive Hold, 5-124
Extension
adding an, 2-10
combination, 3-15, 6-23
copying settings, 2-7
customizing an, 2-6
groups, 2-17
jacks, 2-2
mamimum, 2-2
number, shared, 3-15
numbering, 2-2
programming, 2-5, 2-6, 2-10, 5-90
programming from, 2-1
receptionist, 2-30
restricting access to a line, 2-13
restricting outside dialing, 2-13
swapping, 2-10
transfer return, 5-261
Extension 10/11, 2-1, 2-33
button locations for programming, 2-24
programming from, 2-1
programming overlays, using with, 2-21
Extension Name Display, 5-126
Extension Programming, 2-1, 2-35
Extension, Transfer Return (#306), 5-261
External Hotline (#311), 5-128
Extra alerts, 4-2

F

FACE, 5-135
FACE (Forced Account Code Entry), 5-133
Fax Machine Extensions (#601), 5-132
Fax machines
dialing restrictions for, 4-18
end and receive, 4-18
example setups, 4-18, 4-21
line saver, 4-18
programming for, 5-19, 5-132
transferring calls to, 4-17
using, 4-16
fax machines
single, 4-18
Fax Management button, 5-132
Feature phones, 3-14
Flash, 5-218, 5-220
Follow-Me, 5-53
Forced Account Code List (#409), 5-135
Forwarding calls, 5-53
400 module, 1-6, B-6
400E Module, 1-6
400EC Module, 1-6
5-Slot carrier
configuration overview, 1-6

G

GCD, 5-138
GCD (*see* Group Call Distribution)

Group Call Distribution (#206), 5-138
Group Calling, 5-79, 5-140
Group Hunting, 5-144, 5-156, 5-272
Group Paging, 5-140
Group Pickup, 5-148
Groups
    Calling, 5-79, 5-140
    Hunt, 5-144, 5-156
    Night Service, 5-194
    overview, 2-17
    Paging, 5-79, 5-140
    Pickup, 5-148, 5-207
    setting up, 2-17

H

Handset
    for hard-of-hearing, 4-3
    using, 3-7
    volume controls, 3-10
Hands-Free Answer on Intercom, 3-7
Hard-of-hearing handsets, 4-3, B-6
Hardware, 1-4, 1-15
Headsets, 4-2
HFAI (*see* Hands-Free Answer on Intercom)
Hold button, 5-149
Hold Disconnect Time (#203), 5-152
Hold Reminder Tone, 5-124, 5-150
Hold, Exclusive, 5-124
Holding a call, 5-124, 5-149
Hotel/Motel features
    description, 2-20
    Outgoing Call Restriction Button (#114), 5-200
    Wake Up Service Button (#115), 5-280
Hotline (#603), 5-154
Hotline, External, 5-128
Hotline, Inside front cover, 6-2
Hunt Group
    VMS, 5-272, 5-273
Hunt Group Extensions (#505), 5-156
Hunt Groups
    description, 2-17
    programming
    using, 5-144
Hunt Groups (*see also* Group Call Distribution)
Hybrid Mode, 1-10

I

Idle Line Preference (*see* Automatic Line Selection)
Immediate call answering, 2-30
Immediate ring, 2-29, 2-30, 5-173, 5-174
Industry Standard Devices (*see* Standard devices)
In-Range Out-of-Building (IROB) protectors, 4-3, B-6
Inside call, making an, 5-180
Intercom
    Auto Dial buttons, 5-19
Intercom Auto Dial Button, 3-4
Intercom Autodialer, 1-14, 2-32, 5-19
Intercom call, making an, 5-180
Intercom Dial Tone (#309), 5-158
Intercom status, 2-14
Internal Hotline (*see* Hotline (#603)
Internet
    Customer Self Service Center, 6-1
IROB (In-Range Out-of-Building) protectors, 4-3
IROB (*see* In-Range Out-of-Building protectors)

J

Jacks
    types per module, 2-2
Joining a call, 5-159

K

Key extensions, 5-163
Key Mode, 1-10

L

Labeling
    line and extension jacks, 2-2
    system phones, 2-33
Language, Display (#303), 5-114
Last Number Redial, 5-161
Light patterns, 3-4
    description of, 3-4
    Fax Management button, 4-17
    Intercom Auto Dial Button, 2-31
Line
    adding to system, 2-9
    assigning to extensions, 2-4, 5-167, 5-196
    buttons, 1-14, 3-2, 5-167
    cords,adapter, B-6
    jacks, 2-2
    maximum, 2-2
    numbering, 2-2
    pooling, 2-4
    restricting use at individual extension, 5-165
    type, 5-92
Line Access Restriction (#302), 5-165
Line Assignment (#301)
    default on PARTNER phones, 5-167
    description, 5-167 - 5-170
Line Coverage Extension (#208), 5-171

Line ownership, 5-171
Line pickup, 5-103
Line Ringing
  Caller ID information, effect on display of, 5-173
  description, 5-173
Line Selection, Automatic, 5-24
lines, 2-4
Lines, Number of (#104), 5-196
Lists
  allowed phone numbers, 5-13
  disallowed phone numbers, 5-109
  emergency phone numbers, 5-122
  forced account codes, 5-135
Locking an extension, 5-246
Logging Center ID Calls (*see* Caller ID Logging and Dialing)
Loudspeaker Paging, 5-175, 5-231
Loudspeaker paging system, 4-2

M

Maintenance, B-1
Making a call, 5-177
Manual Signaling, 5-182
Marked System Speed Dial numbers, 2-17, 5-255
Message indicator, 3-3
Message Light On/Off, 5-184, 5-186
Message Waiting (*see* Standard phones)
Microphone, 3-7
Microphone (Mic) button, 3-7
Modems
  send and receive, 4-24
  send only, 4-23
Modules
  200, 1-6
  206E, 1-6
  206EC, 1-6
  308EC, 1-7
  description, 1-6
  numbering order for extensions and lines, 2-2
  PARTNER ACS processor, 1-4, 1-6, 1-7, 2-2, 2-18
  PARTNER MAIL VS, 1-2
  processor, 1-6, B-6
MOH (*see* Music-on-hold)
Monitoring call activity, 2-31, 5-19
monitoring pool activity, 5-209
Music On Hold (#602)
  as background music, 5-188
  description, 4-2, 5-188
  programming, 5-189
  volume, setting system-wide, 5-190
MUSIC ON HOLD jack, 5-190
Music On Hold Volume (#614), 5-190
Mute, 3-7

N

Name Display, 5-74, 5-126
Night Service
  auxiliary equipment with, 4-25
  dialing restrictions with, 2-15
  programming, 5-192
  using, 5-192
  with password, 5-251
Night Service Button (#503)
  description, 5-191
  light patterns, 3-7
Night Service Group Extensions (#504), 5-194
No ring, 2-30, 5-174
Number of Lines (#104), 5-196
Numbering of lines and extensions, 2-2

O

One-touch transfer (*see* Auto Dial numbers)
Optional equipment, 1-15, 2-17, 4-1
Ordering
  equipment, B-4
  reference materials and books, B-4
Outgoing Call Restriction (#401), 5-198
Outgoing Call Restriction Button (#114)
  description, 5-200
  light patterns, 3-7
Out-of-building extension requirements, 4-3
Outside Auto Dial numbers, 5-20
Outside call, making an, 5-178
Outside Conference Denial (#109), 5-203
Outward restriction (*see* Outgoing Call Restriction (#401))
Overriding dialing restrictions, 2-16
Owner
  line, 5-138

P

PAGE jack
  description, 4-2, 5-175
Paging, 5-231
  Calling Groups, 5-140
  Loudspeaker, 5-175, 5-231
  PARTNER model phone, 5-140 - 5-144
  simultaneous, 5-140
PARTNER ACS processor, 1-6, B-5
PARTNER ACS processor module, 1-6, 1-7, 2-18
PARTNER Advanced Communication System processor module (*see* PARTNER ACS processor module)
PARTNER phones
  System Phones, 1-13

PARTNER phones (*see* System phones)
PARTNER Voice Messaging PC Card, 1-2, 1-8, 2-8, 2-20, 4-27, 5-19
PARTNER Voice Messaging Systems (*see* Voice messaging systems)
PARTNER-34D telephone
  buttons and indicators, 3-2
  for receptionist, 2-20
  illustration, 2-23
  programming overlay, 2-21
PARTNER-CA48 Intercom Autodialer, 1-14
Password, System (#403), 5-251
PC Card slots, 1-8
PC Cards, 1-8, 2-20, 5-44, 5-46
PCMIA card (*see* PC Cards)
Permissions, dialing, 2-16
Personal Computer Memory Card International Association (PCMCIA) Card (*see* PC Cards)
Personal Speed Dial numbers, 2-29, 5-203
Phones (*see* Feature phones, Standard phones, and System phones)
Picking up a held call, 5-149, 5-151
Pickup
  Call, 5-58
  Group, 5-58, 5-148, 5-207
  Line, 5-103, 5-105
Pickup Group Extensions (#501), 5-207
Placing a call, 5-177
Playback
  Automatic System Answer, 5-36
  Direct Extension Dial, 5-100
Pool Access Restriction (#315), 5-209
Pool buttons, 5-211
Pool Extension Assignment (#314), 5-211
Pool Line Assignment (#207), 5-214
Pooled extensions
  assigning lines, 5-211
  assigning pools, 5-211
  buttons, 5-211
  restricting, 5-209
Power cord, B-6
Power failure, 3-11, 6-2
Printer (*see* Station Message Detail Recording)
Privacy
  description, 5-22, 5-216
  light patterns, 3-7
Privacy, Automatic Extension (#304), 5-22
Problems, solving, 6-2
Processor module, B-6
  description, 1-6, 2-2
Programmable buttons, 2-29, 3-2
Programming, 2-4
  after installation, 2-8
  auxiliary equipment, 2-17
  backup, 2-20
  buttons, 2-29
  call reporting, 2-18
  centralized telephone, 2-1, 2-34
  changing type, 2-35
  extensions, 2-1, 2-6, 2-34, 2-35
  groups, 2-17
  initial setup, 2-2
  lines, 2-9
  methods, 2-24, 2-33
  mode, 2-24
  overlays, 2-21, 2-24, 2-34
  overview, 2-1
  PBX/Centrex, support for, 2-11
  Quick Reference charts, End of book
  receptionist extension, 2-30
  remote, 2-1
  restore, 2-20
  restrictions and permissions, 2-12
  system, 2-1, 2-12, 2-21
  telephone, 2-1, 2-29, 2-33
  voice messaging system, 2-31
Programming (*see also* System Programming and Telephone Programming)
Programming overlays illustration, 2-23
Pulse dial, 5-92, 5-226

Q

Quick Reference charts, End of book

R

RAU (*see* Remote Administration Unit)
Recall
  programming feature on a button, 5-218
  programming function in phone number, 5-240
  using, 5-219
Recall button
  description, 5-218
  switchhook, use instead of, 3-12
Recall Timer Duration (#107), 5-220
Receptionist extension, 2-30
Redial
  Last Number, 5-161
  Save Number, 5-227
Reference materials, B-4
Reminder service, 5-280
Remote Administration Unit (RAU), 2-27
REN (Ringer Equivalence Number), 1-16
REN (*see*Ringer Equivalence Number)
Repair, B-1
Replacement parts, B-4, B-7
Resetting the system, 5-253, 6-34
Restore problems, 6-26
Restore Programming (#125)
  calls in progress, effect on, 5-222
  description, 2-20, 5-222
  Restore file, choosing manual or automatic, 5-222

Restriction
Line Access (#302), 5-165
Outgoing Call (#401), 5-198
Restrictions
disallowed phone number, 2-16
Restrictions, dialing
disallowed phone numbers, 5-107, 5-109
emergency phone numbers, 5-109
fax machine, for, 4-18
line access, 5-165
locking an extension, 5-246
overriding, 2-16
PBX/Centrex services, with, 2-11
pool access, 5-209
star codes, 2-12, 5-110
summary of, 2-12
Retrieving a held call, 5-149
Ring on Transfer (#119), 5-225
Ring, Distinctive (#308), 5-115
Ringer Equivalence Number (REN), 1-16, 3-16
Ringer volume controls, 3-3
Ringing
Abbreviated (#305), 5-8
Line, 5-173
Transfer, 3-7, 5-278
Ringing patterns
standard phones, 3-12
system phones, 3-7
Ringing/Idle Line Preference (*see* Automatic Line Selection)
Rings, Transfer Return (#105), 5-263
Rings, VMS Cover (#117), 5-271
Rotary
dial, 5-92, 5-226
lines, 5-92, 5-260
phones, 1-15
Rotary Dialing Timeout (#108), 5-226

S

SAC (*see* Send All Calls)
Safety
instructions, xviii
Save Number Redial, 5-227
Self Service Center on the Internet, Customer, 6-1
Send All Calls, 5-229
Set
date, 5-249
time, 5-258
Set day, 5-250
Settings, Copy (#399), 5-90
Setup, initial, 2-2
Sharing an extension, 3-15
Simultaneous Paging, 5-231
SMDR (*see* Station Message Detail Recording)
SMDR Output Format (#610)
description, 5-233
SMDR Record Type (#608), 5-233, 5-235
SMDR Talk Time (#611), 5-237
SMDR Top of Page (#609), 5-239
Speaker
on standard phone, 3-14
on system phone, 3-10
Speaker (Spkr) button, 3-3
Speakerphone
performance tips,using, 3-10
separate, 4-2
Special dialing functions, 5-240
Speed dialing
Auto Dial buttons, 5-19
Personal Speed Dial numbers, 5-203
System Speed Dial numbers, 5-255
Standard devices
answering machines, 4-4
auto attendant, 4-9
call reporting device, 4-10
contact closure device, 4-14
credit card scanners, 4-15
fax machines, 4-16
limitations, 1-16, 3-12
modems, 4-23
problems with, 4-3
telephones, 1-15, 3-11
voice messaging system, 4-25
Standard phone
speaker on, 3-14
Standard phones
Automatic Line Selection for, 5-1, 5-24
call handling, 3-16
Call waiting, 3-11
Caller ID information, 3-14
connecting, 1-16
dial tones, 3-12
dial-code features, 3-16
display, 3-14
feature buttons on, 3-14
feature phones, 3-11
limitations, 1-16, 3-12
message waiting compatibility, 5-184, 5-186
overview, 1-15, 3-11
power failure, for use during, 3-11, 6-2
problems with, 6-15
ringing patterns, 3-12
rotary, 1-15
switchhook, 3-12, 5-218
system messages, 3-14
using, 3-11
Star Code Dial Delay (#410)
description, 2-12, 5-242
programming for Marked System Speed Dialing, 5-243
Station Lock, 5-245
Station Message Detail Recording, 5-233, 5-235, 5-237, 5-239
Station Message Detail Recording (SMDR), 4-10, 5-235, 5-239

Station programming (*see* Extension programming)
Station Unlock, 5-248
Support, customer, 6-2, B-1
Swapping extensions, 2-10
Switchhook flash, 3-12, 5-218, 5-220
System Answer, 5-32
System clock, 2-4, 2-9
System Date (#101), 5-249
System Day (#102), 5-250
System Password (#403), 5-251
System phone
  problems with, 6-9
  programming, 2-34
  speaker, 3-10
System phones
  buttons, 3-3
  call handling, 3-16
  definition, 1-13
  dial code features, 3-16
  dial tones, 3-7
  labeling sheets, 2-33
  lights, 3-4
  microphone, 3-7
  overview, 1-13
  programming mixed types, D-1
  ringing patterns, 3-7
  speaker, 3-7
  using, 3-1, 3-16
System Planner, B-4
System problems, 6-31
System programming
  changing, 2-8, 2-21
  individual procedures, 5-1
  initial, 2-2
  methods of, 2-24
  options, 2-12, 2-29
  overview, 2-1
  PBX/Centrex support, for, 2-11
System programming (*see also* Programming)
System Reset (#728), 5-253
System settings, changing, 2-8, 2-21
System Speed Dial numbers
  description, 5-255
  marking to override dial restrictions, 2-17
  star codes, using with marked numbers, 2-12
System Time (#103), 5-258

T

Talk Back, 5-276
Telephone programming
  at extension, 2-35
  Auto Dial buttons, 2-29, 5-19
  centrally (at extension 10 or 11), 2-34
  lines, 2-29
  methods, 2-33
  options, 2-6, 2-10, 2-29
  overview, 2-1, 2-29
  receptionist extension, 2-30
  speed dialing, 2-29
Telephone usage reports, 5-233, 5-235, 5-237, 5-239
Telephones
  touch-tone phone, 3-11
  using, 3-11
Telephones (*see* System phones and Standard phones)
Time, System (#103), 5-258
Timed flash, 5-218, 5-220
Toll Call Prefix (#402), 5-259
Toll restrictions (*see* Dialing restrictions and permissions), 5-107
Touch-tone dial, 5-92, 5-226
Touch-Tone Enable
  programming feature on a button, 5-260
  programming function in phone number, 5-240
Transfer button, 5-265
Transfer return display message, 5-266
Transfer Return Extension (#306), 5-261
Transfer Return Rings (#105), 5-263
Transfer ringing, 3-7, 3-12, 5-266
Transfer, one-touch, 5-267
Transfer, one-touch (*see* Auto Dial numbers)
Transferring a call
  to a Calling Group, 5-140
  to another extension, 5-265
  to fax machine, 4-17
Troubleshooting, 6-1
200 module, 1-6
206 module, 1-6, B-7
206E module, 1-6
206EC module, 1-6
267F2 bridging adapter, B-7

U

Usage reports, 5-233, 5-235, 5-237, 5-239

V

VMS (*see* Voice Messaging Systems)
VMS Cover
  description, 5-171, 5-269
  light patterns, 3-7
VMS Cover Rings (#117), 5-271
VMS Hunt Delay (#506), 5-272
VMS Hunt Schedule (#507), 5-273
Voice Interrupt On Busy (#312), 5-274
Voice interrupt on busy call
  description, 3-7, 5-274
  responding to a, 5-276
Voice Interrupt On Busy Talk-Back

description, 5-276
Voice Interrupt on Busy Talk-Back
light patterns, 3-7
Voice mail (*see* Voice messaging systems)
Voice Mailbox Transfer, 5-278
Voice messaging system
reference materials, B-4
Voice messaging systems
overview, 4-27
sending calls, 5-229
summary of procedures, 2-19
Voice-signaling, 3-7, 5-140, 5-144
Volume controls, 3-3

W

Wake Up Service Button (#115), 5-280
Warranty information, B-1, B-2, B-3
Wildcard character, 5-13, 5-109, 5-135

Z

Z300A (*see* Electromagnetic Interference filter)

System Programming Quick Reference

Place the Programming Overlay on the dialpad of the system display phone at extension 10 or 11

TO START SYSTEM PROGRAMMING
PRESS (Feature) ⓪ ⓪
PRESS (System Program)
PRESS (System Program)

TO END SYSTEM PROGRAMMING
PRESS (Feature) ⓪ ⓪

TO USE A SPECIFIC PROCEDURE
DIAL ⓐ and three-digit procedure code
Example: ⓐ ① ⓪ ① for System Date

TO CYCLE THROUGH SYSTEM PROGRAMMING PROCEDURES
PRESS (Next Procedure) or (Prev Procedure)
NOTE: Procedures #399, #609, and #729—shown below in dashed boxes—are skipped when cycling.

TO CYCLE THROUGH AVAILABLE SETTINGS
PRESS (Next Data) or (Prev Data)

TO RETURN TO FACTORY SETTING
PRESS (Remove)

System

SYSTEM DATE (p. S-227)
DIAL #101
DIAL the date in MMDDYY form

SYSTEM DAY (p. S-228)
DIAL #102
DIAL 1 = Sunday ✔ 5 = Thursday
2 = Monday 6 = Friday
3 = Tuesday 7 = Saturday
4 = Wednesday

SYSTEM TIME (p. S-236)
DIAL #103
DIAL the time in HHMM 24-hour military format

NUMBER OF LINES (p. S-178)
*See IMPORTANT below
DIAL #104
DIAL two digits (01–24) for the number of outside lines to be assigned to every extension
✔ 2 per 206 or 200 module
✔ 4 per 400 module

TRANSFER RETURN RINGS
DIAL #105 (p. S-241)
DIAL one digit (0–9) for the number of rings before the call returns
✔ = 4 rings
0 rings = no return

RECALL TIMER DURATION
DIAL #107 (p. S-200)
DIAL two digits (01–90) to set the length of a switchhook flash
✔ = 18 (450 msec)

ROTARY DIALING TIMEOUT
DIAL #108 (p. S-205)
DIAL 1 = 4 sec 3 = 12 sec
2 = 8 sec ✔

OUTSIDE CONFERENCE DENIAL
DIAL #109 (p. S-194)
DIAL 1 = Allowed ✔
2 = Disallowed

AUTOMATIC SYSTEM ANSWER DELAY 2.0 (p. S-26)
DIAL #110
DIAL a ring delay number (0–9)
✔ = 2 rings

AUTOMATIC SYSTEM ANSWER BUTTON 2.0 (p. S-23)
DIAL #111
DIAL 1 = Assigned
2 = Not Assigned ✔
3 = Select Button then press a programmable button

DIRECT EXTENSION DIAL DELAY 2.0
DIAL #112 (p. S-98)
DIAL a ring delay number (0–9)
✔ = 2 rings

DIRECT EXTENSION DIAL BUTTON 2.0
DIAL #113 (p. S-53)
DIAL 1 = Assigned
2 = Not Assigned ✔
3 = Select Button then press a programmable button

OUTGOING CALL RESTRICTION BUTTON (p. S-182)
DIAL #114
DIAL 1 = Assigned
2 = Not Assigned ✔
3 = Select Button then press a programmable button

WAKE UP SERVICE BUTTON
DIAL #115 (p. S-256)
DIAL 1 = Assigned
2 = Not Assigned ✔
3 = Select Button then press a programmable button

CALL COVERAGE RINGS 2.0
DIAL #116 (p. S-49)
DIAL one digit (1–9) for the number of rings before the call is sent to the covering extension
✔ = 2 rings

VMS COVER RINGS (p. S-249)
DIAL #117
DIAL one digit (1–9) for the number of rings before the call is sent to the voice messaging system
✔ = 3 rings

RING ON TRANSFER (p. S-204)
DIAL #119
DIAL 1 = Active ✔
2 = Not Active

AUTOMATIC SYSTEM ANSWER MODE
DIAL #121 (p. S-90)
DIAL 1 = Hold ✔ 2.0
2 = Disconnect
3 = Ring
a programmable button

Lines

DIAL MODE (p. S-94)
DIAL #201
DIAL a system line number
DIAL 1 = Touch-Tone ✔
2 = Rotary
PRESS (Next Line) to program another line

HOLD DISCONNECT TIME
DIAL #202 (p. S-136)
DIAL a system line number
DIAL 00 = No Detection
01 = 50 msec
02 = 100 msec
03 = 150 msec
04 = 200 msec
05 = 250 msec
06 = 300 msec
07 = 350 msec
08 = 400 msec
09 = 450 msec
10 = 500 msec
11 = 550 msec
12 = 600 msec
PRESS (Next Line) to program another line

AUTOMATIC SYSTEM ANSWER LINES 2.0 (p. S-29)
DIAL #204
DIAL a system line number
DIAL 1 = Assigned
2 = Not Assigned ✔
PRESS (Next Line) to program another line

DIRECT EXTENSION DIAL LINES
DIAL #205 (p. S-90) 2.0
DIAL a system line number
DIAL 1 = Assigned
2 = Not Assigned ✔
PRESS (Next Line) to program another line

GROUP CALL DISTRIBUTION
DIAL #206 (p. S-124)
DIAL a group number (1–6, 7 for VMS)
DIAL a system line number
DIAL 1 = Assigned
2 = Not Assigned ✔
3 = VMS Line Cover (only for hunt group 7)
PRESS (Next Line) to program another line

POOL LINE ASSIGNMENT 2.0
DIAL #207 (p. S-194)
DIAL a system line number
DIAL 1 = No Pool
2 = Main Pool 880 ✔
3 = Pool 881
4 = Pool 882
5 = Pool 883
PRESS (Next Line) to program another line

LINE COVERAGE EXTENSION
DIAL #209 (p. S-155)
DIAL a system line number
DIAL an extension number
PRESS (Next Line) to program another line
PRESS (Remove) to unassign ownership

For Centralized Telephone Programming, see previous pages.

CALLER ID TYPE (p. S-71)
DIAL #122
DIAL 1 = USA ✔
2 = Singapore

BACKUP PROGRAMMING—AUTOMATIC (p. S-39)
DIAL #123
DIAL 1 = Active
2 = Not Active ✔
3 = Backup Alarm Cleared

BACKUP PROGRAMMING—MANUAL (p. S-42)
DIAL #124
PRESS (Enter) to begin the backup

RESTORE PROGRAMMING
DIAL #125 (p. S-204)
DIAL 1 = MAN. *mmddyy* ✔
2 = AUTO. *mmddyy*
PRESS (Enter) to begin the restore

SYSTEM RESET – PROGRAMMING SAVED (p. S-231)

IMPORTANT: *Using this procedure disconnects any active calls but retains system settings. Use it only if the system fails to function correctly after a power failure or down period.*
DIAL **#720**

Extensions

LINE ASSIGNMENT (p. S-121)
DIAL **#301**
DIAL a system extension number
To remove all existing line assignments, press (Remove) before selecting a line.
DIAL a line number.
DIAL **1**=Assigned ✔
2=Not Assigned
3=Select Button then press a programmable button (to assign the line to that button)
*If you use option 3 **after** a line has been assigned, the line moves from the old button to the new button you select.*
PRESS (Next Item) to program another line for this extension.
To program another extension:
PRESS (Next Extension) (Prev Procedure), enter a new extension number, and repeat above steps

LINE ACCESS RESTRICTION
DIAL **#302** (p. S-149)
DIAL a system extension number
DIAL a system line number
DIAL **1** = No Restriction ✔
2 = Outgoing Only
3 = Incoming Only
4 = No Access (line appears on button, but you can use line only to pick up a transferred or held call)
PRESS (Next Item) to program another line
To program another extension:
PRESS (Next Extension) (Prev Procedure), enter a new extension number, and repeat above steps

DISPLAY LANGUAGE (p. S-105)
DIAL **#303**
DIAL a system extension number
DIAL **1** = English ✔
2 = Spanish
3 = French
PRESS (Next Item) to program another extension

AUTOMATIC EXTENSION PRIVACY
DIAL **#304** (p. S-19)
DIAL a system extension number
DIAL **1** = Assigned
2 = Not Assigned ✔
PRESS (Next Item) to program another extension

ABBREVIATED RINGING (p. S-5)
DIAL **#305**
DIAL a system extension number
DIAL **1** = Active (1 ring) ✔
2 = Not Active (repeated ringing)
PRESS (Next Item) to program another extension

TRANSFER RETURN EXTENSION
DIAL **#306** (p. S-239)
DIAL a system extension number
DIAL number of the extension (10–57) to which call should return if not answered
✔ Extension transferring call
PRESS (Next Item) to program another extension

FORCED ACCOUNT CODE ENTRY
DIAL **#307** (p. S-120)
DIAL a system extension number
DIAL **1** = Assigned
2 = Not Assigned ✔
PRESS (Next Item) to program another extension

DISTINCTIVE RING (p. S-106)
DIAL **#308**
DIAL a system extension number
DIAL **1** = Active ✔
2 = Not Active
PRESS (Next Item) to program another extension

INTERCOM DIAL TONE (p. S-142)
DIAL **#309**
DIAL a system extension number
DIAL **1** = Regular ✔
2 = Machine
PRESS (Next Item) to program another extension

AUTOMATIC VMS COVER (p. S-35)
DIAL **#310**
DIAL a system extension number
DIAL **1** = Assigned
2 = Not Assigned ✔
PRESS (Next Item) to program another extension

EXTERNAL HOTLINE (p. S-117)
DIAL **#311**
DIAL a system extension number
DIAL **1** = Assigned
2 = Not Assigned ✔
PRESS (Next Item) to program another extension

VOICE INTERRUPTION BUSY
DIAL **#312** (p. S-252)
DIAL a system extension number
DIAL **1** = Assigned
2 = Not Assigned ✔
PRESS (Next Item) to program another extension

LINE ACCESS MODE (p. S-147) 2.0
DIAL **#313**
DIAL a system extension number
DIAL **1** = Pool ✔ all extensions except 10
2 = Key ✔ extension 10 only

POOL EXTENSION ASSIGNMENT
DIAL **#314** (p. S-191)
DIAL a system extension number
To remove all existing pool assignments, press (Remove) before selecting a line.
DIAL a pool access code (880, 881, 882, or 883)
DIAL **1** = Assigned ✔ 880
2 = Not Assigned ✔ 881, 882, 883
3 = Select Button then *press a programmable button (auxiliary pools only)* 2.0
PRESS (Next Item) to program another pool for this extension.
To program another extension:
PRESS (Next Extension) (Prev Procedure), enter a new extension number, and repeat above steps

POOL ACCESS RESTRICTION 2.0
DIAL **#315** (p. S-193)
DIAL a system extension number
DIAL a pool number (880, 881, 882, or 883)
DIAL **1** = No Restriction ✔
2 = Outgoing Only
3 = Incoming Only
4 = No Access
PRESS (Next Item) to program another pool
To program another extension:
PRESS (Next Extension) (Prev Procedure), enter a new extension number, and repeat above steps

CALL WAITING (p. S-53)
DIAL **#316**
DIAL a system extension number
DIAL **1** = Assigned
2 = Not Assigned ✔
PRESS (Next Item) to program another extension

CALLER ID LOG ANSWERED CALLS 2.0
DIAL **#317** (p. S-51)
DIAL a system extension number
DIAL **1** = Active
2 = Not Active ✔
PRESS (Next Item) to program another extension

CALLER ID CALL LOG LINE ASSOCIATION 2.0 (p. S-64)
DIAL **#318**
DIAL a system extension number
DIAL a system line number
PRESS (Next Item) to associate another line with this extension
To associate another extension:
PRESS (Next Extension) (Prev Procedure), enter a new extension number, and repeat above steps

COPY SETTINGS (p. S-92)
DIAL **#399**
DIAL a source extension number
DIAL target extension numbers

Procedures #207, #313, #314 and #315—shown in square dotted boxes—

2.0

IMPORTANT: In Key mode, the Number of Lines procedure changes Line Assignment (#301), Line Access Restriction (#302), Automatic Line Selection, and Line Ringing to factory settings. To change line assignments without affecting other settings, use Line Assignment (#301).

In Hybrid mode, the Number of Lines procedure changes Pool Line Assignment (#207), Pool Extension Assignment (#314), and Pool Access Restriction (#315) for existing pools back to factory settings. Additionally, it changes Line Assignment (#301), Line Access Restriction (#302), Automatic Line Selection, and Line Ringing for individual lines back to factory settings. To change pool assignments without affecting other settings, use Pool Line Assignment (#207) and Pool Extension Assignment (#314). 2.0

✔ = Factory setting
= Button with lights required
2.0 = PARTNER ACS Revision 2.0 or later

Centralized Telephone Programming Quick Reference

Place the Programming Overlay on the dialpad of the system display phone at extension 10 or 11

TO ENTER PROGRAMMING MODE

PRESS Feature ⓪ ⓪

PRESS System Program System Program Central Tel Program

DIAL the extension number to be programmed

Buttons on which lines or pools are assigned for the extension light up to show the current Line Ringing setting; remaining buttons can be programmed with Auto Dial numbers or features

TO PROGRAM ANOTHER FEATURE AT THE SAME EXTENSION

After you program one feature, continue with the instructions in the box for the next feature

TO CHANGE SETTING FOR ANOTHER EXTENSION

PRESS Central Tel Program

DIAL the new extension's number

TO ERASE A FEATURE OR AUTO DIAL BUTTON

PRESS the programmed button

PRESS Welcom

TO END PROGRAMMING MODE

PRESS Feature ⓪ ⓪

NOTE: Program Automatic Line Selection or Extension Name Display first.

AUTOMATIC LINE SELECTION

PRESS ⊛ ⊛ *(p. 5-20)*

PRESS the line/pool/intercom buttons in the desired order

PRESS ⊛ ⊛

Key Extension: Outside lines left Welcom ✓

Pooled Extension: Pool 880 button 1, button 2, left Welcom, right Welcom ✓ 2.0

Pools 881-889, individual lines

EXTENSION NAME DISPLAY

PRESS left Welcom *(p. 5-115)*

Enter the character codes for the name (See Table 5-1 "Character Codes" on p. 5-116)

PERSONAL SPEED DIAL NUMBERS *(p. 5-185)*

PRESS Feature

DIAL a two-digit code (80-99)

DIAL the phone number—up to 28 digits including special functions (see "Special Dialing Functions," p. 5-219)

AUTO DIAL NUMBERS—OUTSIDE AND INSIDE *(p. 5-15)*

PRESS a programmable button

To program an outside number:

DIAL the phone number—up to 28 digits including special functions (see "Special Dialing Functions," p. 5-219)

To program an extension number:

PRESS left Welcom

DIAL the extension number (to *ring* the extension) *or* ⊛ plus the extension number (to *voice-signal* the extension)

LINE RINGING *(p. 5-157)*

PRESS each line or pool button until the desired ringing option appears in the display

- Immediate ring *(green steady)* ✓ Lines
- No ring *(green fast flutter)* ✓ Pools
- Delayed ring—starts ringing after 20 seconds *(green slow flashing)*

System Features

ACCOUNT CODE ENTRY *(p. 5-6)*

PRESS a programmable button

PRESS Feature ① ⓔ

BACKGROUND MUSIC *(p. 5-37)*

PRESS a programmable button

PRESS Feature ① ⓐ

CALL COVERAGE *(p. 5-44)*

PRESS a programmable button 2.0

PRESS Feature ⓔ ⓪

DIAL (optional) two-digit *originating* extension number

DIAL (optional) two-digit *covering* extension number

CALL FORWARDING/CALL FOLLOW-ME

PRESS a programmable button *(p. 5-49)*

PRESS Feature ① ①

DIAL (optional) two-digit *originating* extension number

DIAL (optional) two-digit *destination* extension number

CALL PICKUP *(p. 5-54)*

PRESS a programmable button

PRESS left Welcom ⑥

DIAL the two-digit extension number

CALLER ID CALL LOGGING & DIALING

PRESS a programmable button *(p. 5-66)*

PRESS Feature ⓔ ③

CALLER ID INSPECT *(p. 5-69)*

PRESS a programmable button with lights

PRESS Feature ① ⑦

CALLER ID NAME DISPLAY *(p. 5-70)*

PRESS a programmable button with lights

PRESS Feature ① ⑥

CONFERENCE DROP *(p. 5-77)*

PRESS a programmable button

PRESS Feature ⓪ ⑥

CONTACT CLOSURE 1 *(p. 5-79)*

PRESS a programmable button

DIAL left Feature ⓓ ①

CONTACT CLOSURE 2 *(p. 5-79)*

PRESS a programmable button

DIAL left Feature ⓓ ⓔ

DIRECT LINE PICKUP–ACTIVE LINE

PRESS a programmable button *(p. 5-95)*

DIAL left Welcom ⑥ ②

DIRECT LINE PICKUP–IDLE LINE

PRESS a programmable button *(p. 5-97)*

DIAL left Welcom ②

DO NOT DISTURB *(p. 5-107)*

PRESS a programmable button with lights

PRESS Feature ⓪ ①

EXCLUSIVE HOLD *(p. 5-114)*

PRESS a programmable button

PRESS Feature ⓪ ⓔ

GROUP CALLING—RING/PAGE *(p. 5-126)*

For ringing the group:

PRESS a programmable button

PRESS left Welcom ⑦

DIAL a Calling Group number (1-4)

For paging the group:

PRESS a programmable button

PRESS left Welcom ⊛ ⑦

DIAL a Calling Group number (1-4)

System Features Continued

GROUP HUNTING-RING/VOICE SIGNAL
For ringing the first available extension:
PRESS a programmable button (p. 5-129)
PRESS left (Welcom) 7 7
DIAL a Hunt Group number (1-7)
For voice signaling the first available extension:
PRESS a programmable button
PRESS left (Welcom) * 7 7
DIAL a Hunt Group number (1-6)

GROUP PICKUP (p. 5-132)
PRESS a programmable button
PRESS left (Welcom) 6 6
DIAL a Pickup Group number (1-4)

LAST NUMBER REDIAL (p. 5-145)
PRESS a programmable button
PRESS (Feature) 0 5

LOUDSPEAKER PAGING (p. 5-159)
PRESS a programmable button
PRESS left (Welcom) 7 0

MANUAL SIGNALING (p. 5-165)
PRESS a programmable button
PRESS (Feature) 1 5
DIAL the two-digit extension number (to ring extension) *or*
DIAL * plus the two-digit extension number (to voice-signal the extension)

MESSAGE LIGHT OFF (p. 5-167)
PRESS a programmable button
PRESS (Feature) 1 0
DIAL (optional) two-digit extension number

MESSAGE LIGHT ON (p. 5-169)
PRESS a programmable button
PRESS (Feature) 0 9
DIAL (optional) two-digit extension number

PRIVACY (p. 5-196)
PRESS a programmable button with lights
PRESS (Feature) 0 7

RECALL (p. 5-198)
PRESS a programmable button
PRESS (Feature) 0 5

SAVE NUMBER REDIAL (p. 5-206)
PRESS a programmable button
PRESS (Feature) 0 4

SIMULTANEOUS PAGING (p. 5-210)
PRESS a programmable button
PRESS left (Welcom) * 7 0

STATION LOCK (p. 5-223)
PRESS a programmable button
PRESS (Feature) 8 1

TOUCH-TONE ENABLE (p. 5-239)
PRESS a programmable button
PRESS (Feature) 0 8

VMS COVER (p. 5-247)
PRESS a programmable button with lights
PRESS (Feature) 1 5

VOICE INTERRUPT ON BUSY TALK-BACK (p. 5-254)
PRESS a programmable button with lights
PRESS (Feature) 1 8

VOICE MAILBOX TRANSFER (p. 5-255)
PRESS a programmable button
PRESS (Feature) 1 4

✓ = Factory setting
= Button with lights required
= Button with lights recommended
2.0 = PARTNER ACS Revision 2.0 or later

System Programming Quick Reference

Place the Programming Overlay on the dialpad of the system display phone at extension 10 or 11

TO START SYSTEM PROGRAMMING
PRESS [Feature] ⓪ ⓪
PRESS [System Program]
PRESS [System Program]

TO END SYSTEM PROGRAMMING
PRESS [Feature] ⓪ ⓪

TO USE A SPECIFIC PROCEDURE
DIAL ⓐ and three-digit procedure code
Example: ⓐ ① ⓪ ① for System Date

TO CYCLE THROUGH SYSTEM PROGRAMMING PROCEDURES
PRESS [Next Procedure] or [Prev Procedure]
NOTE: Procedures #399, #609, and #729—shown below in dashed boxes—are skipped when cycling.

TO CYCLE THROUGH AVAILABLE SETTINGS
PRESS [Next Data] or [Prev Data]

TO RETURN TO FACTORY SETTING
PRESS [Remove]

Dialing Restrictions and Permissions

OUTGOING CALL RESTRICTION *(p. 5-190)*
DIAL **#401**
DIAL a system extension number
DIAL **1** = No Restriction ✔
2 = Inside (intercom) Only
3 = Local (intercom and local) Only
PRESS [Next/Prev] to program another extension

TOLL CALL PREFIX *(p. 5-297)*
DIAL **#402**
DIAL **1** = 0/1 plus Area Code and Number ✔
2 = Area Code and Number Only

SYSTEM PASSWORD *(p. 5-229)*
DIAL **#403**
DIAL four digits to set the password

DISALLOWED PHONE NUMBER LISTS *(p. 5-100)*
DIAL **#404**
DIAL a list number (1–8)
DIAL a list entry (01–10)
To add entry:
DIAL the telephone number (up to 12 digits)
PRESS [Enter]
PRESS [Remove] to remove a list entry
PRESS [Next/Prev] to program another list entry
To program another list:
PRESS [Next Procedure] [Prev Procedure], enter a new list number, and repeat above steps

DISALLOWED LIST ASSIGNMENTS *(p. 5-99)*
DIAL **#405**
DIAL a system extension number
DIAL a list number (1–8)
DIAL **1** = Assigned
2 = Not Assigned ✔
PRESS [Next/Prev] to assign another list
To program another extension:
PRESS [Next Procedure] [Prev Procedure] enter a new extension number, and repeat above steps

EMERGENCY PHONE NUMBER LIST *(p. 5-112)*
DIAL **#406**
DIAL a list entry (01–10)
To add entry:
DIAL the telephone number (up to 12 digits)
PRESS [Enter]
PRESS [Remove] to remove a list entry
PRESS [Next/Prev] to program another list entry

ALLOWED PHONE NUMBER LISTS *(p. 5-10)*
DIAL **#407**
DIAL a list number (1–8)
DIAL a list entry (01–10)
To add entry:
DIAL the telephone number (up to 12 digits)
PRESS [Enter]
PRESS [Remove] to remove a list entry
PRESS [Next/Prev] to program another list entry
To program another list:
PRESS [Next Procedure] [Prev Procedure] enter a new list number, and repeat above steps

ALLOWED LIST ASSIGNMENTS *(p. 5-9)*
DIAL **#408**
DIAL a system extension number
DIAL a list number (1–8)
DIAL **1** = Assigned
2 = Not Assigned ✔
PRESS [Next/Prev] to assign another list
To program another extension:
PRESS [Next Procedure] [Prev Procedure] enter a new extension number, and repeat above steps

FORCED ACCOUNT CODE LIST *(p. 5-122)*
DIAL **#409**
DIAL a list entry (01–99)
To add entry:
DIAL the account code (up to 6 digits)
PRESS [Enter]
PRESS [Remove] to remove a list entry
PRESS [Next/Prev] to program another list entry

STAR CODE DIAL DELAY *(p. 5-224)*
DIAL **#410**
DIAL **0** = 0 Seconds Delay ✔
1 = 1 Second Delay
2 = 2 Seconds Delay
3 = 3 Seconds Delay
4 = 4 Seconds Delay
5 = 5 Seconds Delay
6 = Not Active

System Speed Dial Numbers (p. 5-233)

To program a number:
PRESS [Feature] ⓪ ⓪ to enter programming mode
PRESS [Feature]
DIAL a three-digit code (600–699)
DIAL the telephone number—up to 28 digits including special characters (see page 5-219) To "mark" it (to override restrictions), dial ⓗ before the telephone number
To program another number, or to change a number, repeat
PRESS [Feature] ⓪ ⓪ to exit programming mode

To remove a number:
PRESS [Feature] ⓪ ⓪ to enter programming mode
PRESS [Feature]
DIAL the System Speed Dial number's code (600–699)
PRESS [Remove]
To remove another number, repeat
PRESS [Feature] ⓪ ⓪ to exit programming mode

Groups

PICKUP GROUP EXTENSIONS
DIAL **#581** (p. S-188)
DIAL a group number (1–4)
DIAL an extension number (10–67)
DIAL **1** = Assigned to group
2 = Not Assigned to group ✔
PRESS [MORE/DIR] to assign another extension

CALLING GROUP EXTENSIONS
DIAL **#582** (p. S-73)
DIAL a group number (1–4)
DIAL an extension number (10–67)
DIAL **1** = Assigned to group
2 = Not Assigned to group ✔
PRESS [MORE/DIR] to assign another extension

NIGHT SERVICE BUTTON
DIAL **#583** (p. S-174)
DIAL **1** = Assigned
2 = Not Assigned ✔
3 = Select button then press a programmable button (to assign Night Service to that button)
If you use option 3 after a Night Service button has been assigned, the Night Service button moves from the old button to the new button you select.

NIGHT SERVICE GROUP EXTENSIONS
DIAL **#584** (p. S-177)
DIAL a system extension number
DIAL **1** = Assigned to group
2 = Not Assigned to group ✔
PRESS [MORE/DIR] to assign another extension

HUNT GROUP EXTENSIONS
DIAL **#585** (p. S-140)
DIAL a group number (1-6, 7 for VMS)
DIAL an extension number (10-67)
DIAL **1** = Assigned to group
2 = Not Assigned to group ✔
PRESS [MORE/DIR] to assign another extension

VMS HUNT DELAY (p. S-250)
DIAL **#586**
DIAL **1** = Immediate ✔
2 = Delayed

VMS HUNT SCHEDULE (p. S-251)
DIAL **#587**
DIAL **1** = Always ✔
2 = Day Only
3 = Night Only

Auxiliary Equipment

FAX MACHINE EXTENSIONS
DIAL **#601** (p. S-119)
DIAL an system extension number
DIAL **1** = Assigned
2 = Not Assigned ✔
PRESS [MORE/DIR] to identify another extension

MUSIC ON HOLD (p. S-171)
DIAL **#602**
DIAL **1** = Active ✔
2 = Not Active

HOTLINE (p. S-138)
DIAL **#603**
DIAL the hotline extension number (*not* ext. 10 or the first two extensions on of any 206 or 308 modules)
DIAL the alerted extension number (*not* the hotline) or [1][8] to paging system
To remove the hotline and alert:
PRESS [Remove]

DOORPHONE 1 EXTENSION
DIAL **#604** (p. S-110)
DIAL any system extension except 10, 11 or the first 2 extensions of any 206 or 308 modules.
To remove the doorphone extension:
PRESS [Remove]

DOORPHONE 2 EXTENSION
DIAL **#605** (p. S-110)
DIAL any system extension except 10, 11 or the first 2 extensions of any 206 or 308 modules.
To remove the doorphone extension:
PRESS [Remove]

DOORPHONE ALERT EXTENSIONS (p. S-109)
DIAL **#606**
DIAL an extension number (except a doorphone extension)
DIAL **1** = Not an alert ✔
2 = Doorphone 1 alert
3 = Doorphone 2 alert
4 = Doorphones 1 and 2
PRESS [MORE/DIR] to identify another extension (up to 48 alert extensions per doorphone)

AUTOMATED ATTENDANT EXTENSIONS (p. S-4)
DIAL **#607**
DIAL a system extension number
DIAL **1** = Assigned
2 = Not Assigned ✔
PRESS [MORE/DIR] to assign another extension

SMDR RECORD TYPE (p. S-214)
DIAL **#608**
DIAL **1** = All calls ✔
2 = Outgoing calls only

SMDR TOP OF PAGE (p. S-219)
DIAL **#609**

SMDR OUTPUT FORMAT
DIAL **#610** (p. S-212)
DIAL **1** = 15 digits ✔
2 = 24 digits

SMDR TALK TIME (p. S-216) 2.0
DIAL **#611**
DIAL **1** = Active
2 = Not Active ✔

CONTACT CLOSURE GROUP
DIAL **#612** (p. S-90)
DIAL a group number (1 or 2)
DIAL an extension number (10-41)
DIAL **1** = Assigned to group
2 = Not Assigned to group ✔

CONTACT CLOSURE OPERATION TYPE (p. S-91)
DIAL **#613**
DIAL a Contact Closure (1 or 2)
DIAL **1** = 1-Second On
2 = 3-Seconds On ✔
3 = 5-Seconds On
4 = Toggle

MUSIC ON HOLD VOLUME
DIAL **#614** (p. S-173)
DIAL **1** = – ▪ +
2 = – ▪▪ +
3 = – ▪▪▪ +
4 = – ▪▪▪▪ + ✔
5 = – ▪▪▪▪▪ +
6 = – ▪▪▪▪▪▪ +
7 = – ▪▪▪▪▪▪▪ +

✔ = Factory setting
= Button with lights required
2.0 = PARTNER ACS Revision 2.0 or later