Maintenance for

Avaya DEFINITY® Server SI

Volumes 1, 2, and 3

555-233-123

Issue 4

May 2002

Copyright 2002, Avaya Inc.
All Rights Reserved

Notice

Every effort was made to ensure that the information in this document was complete and accurate at the time of printing. However, information is subject to change.

Preventing Toll Fraud

"Toll fraud" is the unauthorized use of your telecommunications system by an unauthorized party (for example, a person who is not a corporate employee, agent, subcontractor, or is not working on your company's behalf). Be aware that there may be a risk of toll fraud associated with your system and that, if toll fraud occurs, it can result in substantial additional charges for your telecommunications services.

Avaya Fraud Intervention

If you suspect that you are being victimized by toll fraud and you need technical assistance or support, in the United States and Canada, call the Technical Service Center's Toll Fraud Intervention Hotline at 1-800-643-2353.

How to Get Help

For additional support telephone numbers, go to the Avaya Web site:
http://www.avaya.com/support/

If you are:

- Within the United States, click *Escalation Lists*, which includes escalation phone numbers within the USA.
- Outside the United States, click *Escalation Lists* then click *Global Escalation List*, which includes phone numbers for the regional Centers of Excellence.

Providing Telecommunications Security

Telecommunications security (of voice, data, and/or video communications) is the prevention of any type of intrusion to (that is, either unauthorized or malicious access to or use of) your company's telecommunications equipment by some party.

Your company's "telecommunications equipment" includes both this Avaya product and any other voice/data/video equipment that could be accessed via this Avaya product (that is, "networked equipment").

An "outside party" is anyone who is not a corporate employee, agent, subcontractor, or is not working on your company's behalf. Whereas, a "malicious party" is anyone (including someone who may be otherwise authorized) who accesses your telecommunications equipment with either malicious or mischievous intent.

Such intrusions may be either to/through synchronous (time-multiplexed and/or circuit-based) or asynchronous (character-, message-, or packet-based) equipment or interfaces for reasons of:

- Utilization (of capabilities special to the accessed equipment)
- Theft (such as, of intellectual property, financial assets, or toll-facility access)
- Eavesdropping (privacy invasions to humans)
- Mischief (troubling, but apparently innocuous, tampering)
- Harm (such as harmful tampering, data loss or alteration, regardless of motive or intent)

Be aware that there may be a risk of unauthorized intrusions associated with your system and/or its networked equipment. Also realize that, if such an intrusion should occur, it could result in a variety of losses to your company (including but not limited to, human/data privacy, intellectual property, material assets, financial resources, labor costs, and/or legal costs).

Responsibility for Your Company's Telecommunications Security

The final responsibility for securing both this system and its networked equipment rests with you - Avaya's customer system administrator, your telecommunications peers, and your managers. Base the fulfillment of your responsibility on acquired knowledge and resources from a variety of sources including but not limited to:

- Installation documents
- System administration documents
- Security documents
- Hardware-/software-based security tools
- Shared information between you and your peers
- Telecommunications security experts

To prevent intrusions to your telecommunications equipment, you and your peers should carefully program and configure:

- Your Avaya-provided telecommunications systems and their interfaces
- Your Avaya-provided software applications, as well as their underlying hardware/software platforms and interfaces
- Any other equipment networked to your Avaya products.

Voice Over Internet Protocol (VoIP)

If the equipment supports Voice over Internet Protocol (VoIP) facilities, you may experience certain compromises in performance, reliability and security, even when the equipment performs as warranted. These compromises may become more acute if you fail to follow Avaya's recommendations for configuration, operation and use of the equipment. YOU ACKNOWLEDGE THAT YOU ARE AWARE OF THESE RISKS AND THAT YOU HAVE DETERMINED THEY ARE ACCEPTABLE FOR YOUR APPLICATION OF THE EQUIPMENT. YOU ALSO ACKNOWLEDGE THAT, UNLESS EXPRESSLY PROVIDED IN ANOTHER AGREEMENT, YOU ARE SOLELY RESPONSIBLE FOR (1) ENSURING THAT YOUR NETWORKS AND SYSTEMS ARE ADEQUATELY SECURED AGAINST UNAUTHORIZED INTRUSION AND (2) BACKING UP YOUR DATA AND FILES.

Standards Compliance

Avaya Inc. is not responsible for any radio or television interference caused by unauthorized modifications of this equipment or the substitution or attachment of connecting cables and equipment other than those specified by Avaya Inc. The correction of interference caused by such unauthorized modifications, substitution or attachment will be the responsibility of the user. Pursuant to Part 15 of the Federal Communications Commission (FCC) Rules, the user is cautioned that changes or modifications not expressly approved by Avaya Inc. could void the user's authority to operate this equipment.
The equipment described in this manual complies with standards of the following organizations and laws, as applicable:

- Australian Communications Agency (ACA)
- American National Standards Institute (ANSI)
- Canadian Standards Association (CSA)
- Committee for European Electrotechnical Standardization (CENELEC) – European Norms (EN's)
- Digital Private Network Signaling System (DPNSS)
- European Computer Manufacturers Association (ECMA)
- European Telecommunications Standards Institute (ETSI)
- FCC Rules Parts 15 and 68
- International Electrotechnical Commission (IEC)
- International Special Committee on Radio Interference (CISPR)
- International Telecommunications Union - Telephony (ITU-T)
- ISDN PBX Network Specification (IPNS)
- National ISDN-1
- National ISDN-2
- Underwriters Laboratories (UL)

Product Safety Standards

This product complies with and conforms to the following international Product Safety standards as applicable:

Safety of Information Technology Equipment, IEC 60950, 3rd Edition including all relevant national deviations as listed in Compliance with IEC for Electrical Equipment (IECEE) CB-96A.

Safety of Laser products, equipment classification and requirements:

- IEC 60825-1, 1.1 Edition
- Safety of Information Technology Equipment, CAN/CSA-C22.2 No. 60950-00 / UL 60950, 3rd Edition
- Safety Requirements for Customer Equipment, ACA Technical Standard (TS) 001 - 1997
- One or more of the following Mexican national standards, as applicable: NOM 001 SCFI 1993, NOM SCFI 016 1993, NOM 019 SCFI 1998

Electromagnetic Compatibility (EMC) Standards

This product complies with and conforms to the following international EMC standards and all relevant national deviations:

Limits and Methods of Measurement of Radio Interference of Information Technology Equipment, CISPR 22:1997 and EN55022:1998.

Information Technology Equipment – Immunity Characteristics – Limits and Methods of Measurement, CISPR 24:1997 and EN55024:1998, including:

- Electrostatic Discharge (ESD) IEC 61000-4-2
- Radiated Immunity IEC 61000-4-3
- Electrical Fast Transient IEC 61000-4-4
- Lightning Effects IEC 61000-4-5
- Conducted Immunity IEC 61000-4-6
- Mains Frequency Magnetic Field IEC 61000-4-8
- Voltage Dips and Variations IEC 61000-4-11
- Powerline Harmonics IEC 61000-3-2
- Voltage Fluctuations and Flicker IEC 61000-3-3

Federal Communications Commission Statement

Part 15:

Note: This equipment has been tested and found to comply with the limits for a Class A digital device, pursuant to Part 15 of the FCC Rules. These limits are designed to provide reasonable protection against harmful interference when the equipment is operated in a commercial environment. This equipment generates, uses, and can radiate radio frequency energy and, if not installed and used in accordance with the instruction manual, may cause harmful interference to radio communications. Operation of this equipment in a residential area is likely to cause harmful interference in which case the user will be required to correct the interference at his own expense.

Part 68: Answer-Supervision Signaling. Allowing this equipment to be operated in a manner that does not provide proper answer-supervision signaling is in violation of Part 68 rules. This equipment returns answer-supervision signals to the public switched network when:

- answered by the called station,
- answered by the attendant, or
- routed to a recorded announcement that can be administered by the customer premises equipment (CPE) user.

This equipment returns answer-supervision signals on all direct inward dialed (DID) calls forwarded back to the public switched telephone network. Permissible exceptions are:

- A call is unanswered.
- A busy tone is received.
- A reorder tone is received.

Avaya attests that this registered equipment is capable of providing users access to interstate providers of operator services through the use of access codes. Modification of this equipment by call aggregators to block access dialing codes is a violation of the Telephone Operator Consumers Act of 1990.

This equipment complies with Part 68 of the FCC Rules. On the rear of this equipment is a label that contains, among other information, the FCC registration number and ringer equivalence number (REN) for this equipment. If requested, this information must be provided to the telephone company.

The REN is used to determine the quantity of devices which may be connected to the telephone line. Excessive RENs on the telephone line may result in devices not ringing in response to an incoming call. In most, but not all areas, the sum of RENs should not exceed 5.0. To be certain of the number of devices that may be connected to a line, as determined by the total RENs, contact the local telephone company.

REN is not required for some types of analog or digital facilities.

Means of Connection

Connection of this equipment to the telephone network is shown in the following table.

Manufacturer's Port Identifier	FIC Code	SOC/REN/ A.S. Code	Network Jacks
Off/On premises station	OL13C	9.0F	RJ2GX, RJ21X, RJ11C
DID trunk	02RV2-T	0.0B	RJ2GX, RJ21X
CO trunk	02GS2	0.3A	RJ21X
CO trunk	02LS2	0.3A	RJ21X
Tie trunk	TL31M	9.0F	RJ2GX
Basic Rate Interface	02IS5	6.0F, 6.0Y	RJ49C
1.544 digital interface	04DU9-BN, 1KN, 1SN	6.0F	RJ48C, RJ48M
120A2 channel service unit	04DU9-DN	6.0Y	RJ48C

If the terminal equipment (for example, the MultiVantage™ Solution equipment) causes harm to the telephone network, the telephone company will notify you in advance that temporary discontinuance of service may be required. But if advance notice is not practical, the telephone company will notify the customer as soon as possible. Also, you will be advised of your right to file a complaint with the FCC if you believe it is necessary.

The telephone company may make changes in its facilities, equipment, operations or procedures that could affect the operation of the equipment. If this happens, the telephone company will provide advance notice in order for you to make necessary modifications to maintain uninterrupted service.

If trouble is experienced with this equipment, for repair or warranty information, please contact the Technical Service Center at 1-800-242-2121 or contact your local Avaya representative. If the equipment is causing harm to the telephone network, the telephone company may request that you disconnect the equipment until the problem is resolved.

It is recommended that repairs be performed by Avaya certified technicians.
The equipment cannot be used on public coin phone service provided by the telephone company. Connection to party line service is subject to state tariffs. Contact the state public utility commission, public service commission or corporation commission for information.
This equipment, if it uses a telephone receiver, is hearing aid compatible.

Canadian Department of Communications (DOC) Interference Information

This Class A digital apparatus complies with Canadian ICES-003.
Cet appareil numérique de la classe A est conforme à la norme NMB-003 du Canada.

This digital apparatus does not exceed Class A limits for radio noise emission set out in the radio interference regulation of the Canadian Department of Communications.

Le Présent Appareil Nomérique n'émet pas de bruits radioélectriques dépassant les limites applicables aux appareils manicures de la class A préscrites dans le reglement sur le brouillage radioélectrique édicté par le ministére des Communications du Canada.

This equipment meets the applicable Industry Canada Terminal Equipment Technical Specifications. This is confirmed by the registration number. The abbreviation, IC, before the registration number signifies that registration was performed based on a Declaration of Conformity indicating that Industry Canada technical specifications were met. It does not imply that Industry Canada approved the equipment.

DECLARATIONS OF CONFORMITY

United States FCC Part 68 Supplier's Declaration of Conformity (SDoC)

Avaya Inc. in the United States of America hereby certifies that the equipment described in this document and bearing a TIA TSB-168 label identification number complies with the FCC's Rules and Regulations 47 CFR Part 68, and the Administrative Council on Terminal Attachments (ACTA) adopted technical criteria.
Avaya further asserts that Avaya handset-equipped terminal equipment described in this document complies with Paragraph 68.316 of the FCC Rules and Regulations defining Hearing Aid Compatibility and is deemed compatible with hearing aids.
Copies of SDoCs signed by the Responsible Party in the U. S. can be obtained by contacting your local sales representative and are available on the following Web site:
http://support.avaya.com/elmodocs2/DoC/SDoC/index.jhtml/
All MultiVantage™ system products are compliant with FCC Part 68, but many have been registered with the FCC before the SDoC process was available. A list of all Avaya registered products may be found at:
http://www.part68.org/
by conducting a search using "Avaya" as manufacturer.

European Union Declarations of Conformity

CE

Avaya Inc. declares that the equipment specified in this document bearing the "CE" (*Conformité Europeénne*) mark conforms to the European Union Radio and Telecommunications Terminal Equipment Directive (1999/5/EC), including the Electromagnetic Compatibility Directive (89/336/EEC) and Low Voltage Directive (73/23/EEC). This equipment has been certified to meet CTR3 Basic Rate Interface (BRI) and CTR4 Primary Rate Interface (PRI) and subsets thereof in CTR12 and CTR13, as applicable.

Copies of these Declarations of Conformity (DoCs) signed by the Vice President of MultiVantage™ Solutions research and development, Avaya Inc., can be obtained by contacting your local sales representative and are available on the following Web site:
http://support.avaya.com/elmodocs2/DoC/IDoC/index.jhtml/

Japan

This is a Class A product based on the standard of the Voluntary Control Council for Interference by Information Technology Equipment (VCCI). If this equipment is used in a domestic environment, radio disturbance may occur, in which case, the user may be required to take corrective actions.

この装置は、情報処理装置等電波障害自主規制協議会（ＶＣＣＩ）の基準に基づくクラスＡ情報技術装置です。この装置を家庭環境で使用すると電波妨害を引き起こすことがあります。この場合には使用者が適切な対策を講ずるよう要求されることがあります。

Network Connections

Digital Connections - The equipment described in this document can be connected to the network digital interfaces throughout the European Union.
Analogue Connections - The equipment described in this document can be connected to the network analogue interfaces throughout the following member states:

Belgium	Germany	Luxembourg
Netherlands	Spain	United Kingdom

LASER Product

The equipment described in this document may contain Class 1 LASER Device(s) if single-mode fiber-optic cable is connected to a remote expansion port network (EPN). The LASER devices operate within the following parameters:

- Maximum power output –5 dBm to -8 dBm
- Center Wavelength 1310 nm to 1360 nm
- CLASS 1 LASER PRODUCT IEC 60825-1: 1998

Use of controls or adjustments or performance of procedures other than those specified herein may result in hazardous radiation exposure. Contact your Avaya representative for more laser product information.

To order copies of this and other documents:

Call: Avaya Publications Center
Voice 1.800.457.1235 or 1.410.568.3680
FAX 1.800.457.1764 or 1.410.891.0207
Write: Globalware Solutions
200 Ward Hill Avenue
Haverhill, MA 01835 USA
Attention: Avaya Account Management
E-mail: totalware@gwsmail.com

Contents

Volume One

About this Book **xxvii**

- General xxvii
- Conventions Used in This Document xxviii
- Organization xxix
- Safety Precautions xxx
- Class 1 Laser Device xxxi
- Security Issues xxxi
- Standards Compliance xxxii
- Electromagnetic Compatibility Standards xxxiii
- Trademarks and Service Marks xxxiv
- How to Order Documentation xxxv
- How to Comment on This Document xxxv
- Where to Call for Technical Support xxxvi

1 Maintenance Architecture **1-1**

- How to use the Maintenance book 1-1
- Maintenance Objects 1-6
- Alarm and Error Reporting 1-7
- Maintenance Testing 1-8
- Protocols 1-9
- Service Codes 1-23
- Facility Interface Codes 1-24
- Multimedia Interface (MMI) 1-25

Contents

2 Circuit Packs and Power 2-1

- Circuit Packs 2-1
- Power 2-2

3 Management Terminals 3-1

- General 3-1
- Management Terminals 3-1
- System Login Procedure 3-3
- Password Aging 3-6
- Administrable Logins 3-7
- System Logoff Procedure 3-21
- Switch-Based Bulletin Board 3-22
- DEC VT220 Terminal 3-25

4 Initialization and Recovery 4-1

- Reset commands 4-1
- Procedure for SPE-Down Mode 4-8
- Procedure for Duplication Interface — Processing Element Communication Down 4-12

5 Routine Maintenance Procedures 5-1

- Suppress Alarm Origination [y] 5-1
- Handling Control Circuit Packs 5-2
- TN2404/TN790 processor circuit pack 5-4
- Removing Power 5-5
- Restoring Power 5-7
- Troubleshooting power units 5-10
- System Backup 5-19
- Software Upgrade 5-23

Contents

- Preventive Maintenance Procedures 5-24
- System Features 5-25
- Troubleshooting Backplane Voltage Problems 5-50
- Multimedia Call Handling (MMCH) 5-51
- Install DS1 CPE Loopback Jack (T1 Only) 5-58
- ATM Tips 5-71
- Unusual ATM trouble conditions 5-97

6 Reliability Systems: A Maintenance Aid 6-1

- General 6-1
- Reliability Options 6-3
- Duplicated Hardware 6-4
- Duplication Concepts 6-10
- System Technician Commands for High and Critical Reliability Systems 6-15
- Processor Complex Circuit Pack LED Strategies 6-19
- Repair Procedures for High and Critical Reliability 6-21
- Procedure for Installing/Replacing the Inter-Cabinet Cable 6-34
- Blocking Standby SPE Maintenance Activities for System Testing 6-35

7 LED Interpretation 7-1

- General 7-1
- Terminal Alarm Notification 7-2
- Processor and Maintenance Circuit Pack LEDs 7-3
- Duplication Interface circuit pack LEDs 7-4
- Attendant console LEDs 7-6
- Cabinet power unit LEDs 7-6
- Power Distribution Unit LEDs 7-6
- Control and port circuit pack status LEDs 7-7

Contents

8 Maintenance Commands and Trouble-Clearing Aids 8-1

- busyout access-endpoint 8-2
- busyout board 8-3
- busyout cdr-link 8-5
- busyout data-module 8-6
- busyout journal-printer 8-7
- busyout link 8-9
- busyout mis 8-10
- busyout modem-pool 8-11
- busyout packet-control 8-12
- busyout pms-link 8-13
- busyout port 8-15
- busyout pri-endpoint 8-16
- busyout sp-link 8-17
- busyout spe-standby 8-18
- busyout station 8-19
- busyout tdm 8-21
- busyout tone-clock 8-22
- busyout trunk 8-23
- cancel hardware-group 8-25
- change circuit-packs 8-25
- change firmware download 8-29
- change ip-network-region 8-30
- change synchronization 8-32
- change system-parameters maintenance 8-34
- clear audits 8-46
- clear errors 8-46
- clear interface 8-47
- clear isdn-testcall 8-47
- clear link 8-48
- clear mst 8-48
- clear pkt 8-48
- clear port 8-49
- copy update-file 8-49

Contents

- disable administered-connection 8-50
- disable filesystem board ppcss 8-50
- disable firmware download 8-51
- disable mst 8-51
- disable suspend-alm-orig 8-51
- disable synchronization-switch 8-52
- disable test-number 8-52
- display alarms 8-53
- display cabinet 8-58
- display capacity 8-60
- display communication-interface 8-70
- display communication-interface hop-channels 8-71
- display communication-interface links 8-72
- display communication-interface processor-channel 8-74
- display disabled-tests 8-76
- display errors 8-77
- display events 8-82
- display failed ip-network-region 8-97
- display firmware download 8-97
- display initcauses 8-98
- display memory-configuration 8-104
- display node-names 8-105
- display port 8-107
- display synchronization 8-109
- display system-parameters duplication 8-111
- display system-parameters maintenance 8-112
- display test-schedule 8-122
- display time 8-125
- download update-file 8-126
- enable administered-connection 8-131
- enable filesystem board 8-131
- enable mst 8-132
- enable suspend-alm-orig 8-132
- enable synchronization-switch 8-133
- enable test-number 8-134

Contents

- get boot-image 8-134
- get ethernet options 8-135
- get vector 8-136
- list configuration 8-139
- list configuration license 8-143
- list config software-version 8-144
- list directory 8-148
- list disabled-mos 8-149
- list history 8-150
- list ip-route 8-152
- list isdn-testcall 8-154
- list marked-ports 8-155
- list measurements clan ethernet 8-156
- list measurements clan ppp 8-158
- list measurements clan sockets 8-160
- list measurements ds-1 8-163
- list measurements ip codec 8-167
- list measurements ip dsp-resource 8-171
- list measurements ip-signaling-group 8-175
- list mst 8-177
- list registered-ip-stations 8-210
- list skill-status 8-211
- list station 8-213
- list suspend-alm-orig 8-214
- list testcalls 8-215
- list trace 8-219
- mark port 8-221
- monitor bcms 8-221
- monitor health 8-226
- monitor security-violations 8-228
- monitor system 8-230
- monitor traffic 8-235
- monitor trunk 8-237
- netstat ip-route 8-238
- netstat arp 8-239

Contents

- ping 8-243
- recycle carrier 8-247
- refresh route-table 8-248
- refresh spe-standby 8-250
- release access-endpoint 8-251
- release board 8-252
- release cdr-link 8-253
- release data-module 8-254
- release journal-printer 8-255
- release link 8-256
- release mis 8-257
- release modem-pool 8-258
- release packet-control 8-259
- release pms-link 8-260
- release port 8-261
- release pri-endpoint 8-262
- release sp-link 8-263
- release spe-standby 8-264
- release station 8-265
- release tdm 8-266
- release tone-clock 8-267
- release trunk 8-268
- remove file 8-269
- remove license 8-269
- reset board 8-270
- reset interface 8-271
- reset ip-endpoints 8-271
- reset maintenance 8-272
- reset spe-standby 8-273
- reset system 8-273
- reset system 3 8-276
- reset translation-id 8-277
- reset val 8-277
- restore announcements 8-278
- resume hardware-group 8-280

Contents

- save announcements 8-280
- save translation 8-283
- set boot-image 8-284
- set ethernet-options 8-285
- set expansion-link 8-286
- set options 8-286
- set signaling-group 8-292
- set synchronization 8-293
- set tdm 8-294
- set time 8-295
- set tone-clock 8-296
- set vector 8-297
- status access-endpoint 8-299
- status administered-connection 8-301
- status attendant 8-302
- status audits 8-303
- status bri-port 8-311
- status card-mem 8-318
- status cdr-link 8-321
- status clan-port 8-322
- status cleared-alarm-notif 8-322
- status conference 8-323
- status data-module 8-358
- status esm 8-360
- status firmware download 8-361
- status hardware-group 8-362
- status health 8-364
- status interface 8-366
- status ip-board 8-367
- status ip-network-region 8-369
- status isdn-testcall 8-370
- status journal-link 8-372
- status link n 8-373
- status logins 8-377
- status pms-link 8-378

Contents

- status pri-endpoint 8-379
- status processor-channel 8-380
- status psa 8-382
- status signaling-group 8-382
- status sp-link 8-384
- status station 8-385
- status synchronization 8-390
- status system 8-392
- status trunk 8-400
- status tsc-administered 8-406
- status tti 8-408
- status val-ip 8-410
- test access-endpoint 8-411
- test alarms 8-412
- test analog-testcall 8-417
- test board 8-420
- test card-mem 8-422
- test cdr-link 8-425
- test customer-alarm 8-426
- test data-module 8-428
- test ds1-loop 8-430
- test duplication-interface 8-432
- test eda-external-device-alrm 8-434
- test environment 8-436
- test failed ip-network-region 8-439
- test firmware download 8-440
- test hardware-group 8-440
- test inads-link 8-446
- test interface 8-448
- test isdn-testcall 8-450
- test journal-printer 8-452
- test led 8-454
- test link 8-455
- test maintenance 8-457
- test memory 8-459

Contents

- test modem-pool 8-461
- test network-control 8-463
- test packet-control 8-465
- test pkt 8-467
- test pms-link 8-469
- test port 8-471
- test pri-endpoint 8-473
- test processor 8-475
- test shadow-link 8-477
- test signaling-group 8-479
- test sp-link 8-481
- test spe-standby 8-483
- test station 8-485
- test synchronization 8-487
- test tdm 8-489
- test tone-clock 8-491
- test trunk 8-493
- test tsc-administered 8-495
- traceroute 8-496
- upgrade software 8-499

9 Packet Bus Fault Isolation and Correction 9-1

- General 9-1
- Remote Maintenance versus On-Site Maintenance 9-2
- Tools for Packet Bus Fault Isolation and Correction 9-3
- Packet Bus 9-4
- Circuit Packs That Use the Packet Bus 9-5
- Maintenance of the Packet Bus 9-8
- The Maintenance/Test Circuit Pack (TN771D) 9-10
- Packet Bus Fault Isolation Flowchart 9-19
- Packet Bus Fault Correction 9-24

Contents

Volume Two

10 Maintenance Object Repair Procedures 10-1

- Escalation Procedures 10-1
- Cabling Precautions 10-2
- ABRI-PORT (ASAI ISDN-BRI Port) 10-2
- AC-POWER 10-3
- ADM-CONN (Administered Connection) 10-11
- ADX8D-BD (AUDIX Circuit Pack) 10-15
- ADX8D-PT (AUDIX Digital Port) 10-16
- ADX16D-B (16 Port AUDIX Circuit Pack) 10-24
- ADX16A-BD (AUDIX Circuit Pack) 10-24
- ADX16D-P (16-Port AUDIX Digital Port) 10-25
- ADX16A-PT (AUDIX Analog Line/Control Link) 10-34
- ALARM-PT (ALARM PORT) 10-43
- ANL-24-L (24-Port Analog Line) 10-44
- ANL-16-L (16-Port Neon Analog Line) 10-63
- ANL-BD (Analog Line Circuit Pack) 10-85
- ANL-LINE (8-Port Analog Line), ANL-NE-L (8-Port Neon Analog Line) 10-86
- AN-LN-PT (Analog Line Port) 10-111
- ANN-BD (Announcement Circuit Pack) 10-132
- ANN-PT (Announcement Port) 10-154
- ANNOUNCE (Announce) 10-166
- ASAI-BD (Multi-Application Platform Board) 10-171
- ASAI-EPT 10-173
- ASAI-PT 10-182
- ASAI-RES/E-DIG-RES (TN800 reserve slot) 10-193
- ATM-BCH (ATM B-Channel Trunk) 10-194
- ATM-DCH (ATM D-Channel Port) 10-208
- ATM-INTF (TN2305/6) 10-211
- ATM-SGRP (ATM Signaling Group) 10-214

Contents

- ATM-TRK (Circuit Emulation Service Circuit Pack) 10-227
- AXA12-BD/ADX8D-BD/AXD12-BD (AUDIX Circuit Packs) 10-257
- AXA12-RS/ADX8D-RS/AXD12-RS (AUDIX Reserve Slots) 10-258
- BRI-BD/LGATE-BD (ISDN-BRI Line Circuit Pack) 10-259
- BRI-DAT (ISDN-BRI) 10-266
- BRI-PORT (ISDN-BRI Port), ABRI-PORT (ASAI ISDN-BRI Port) 10-267
- BRI-SET, ASAI-ADJ, BRI-DAT 10-292
- CABINET (Cabinet Sensors) 10-323
- CAP-MEM (Memory Card Capacity) 10-338
- CARD-MEM (Memory Card) 10-341
- CARR-POW (Carrier Port Power Unit) for AC-Powered Systems 10-360
- CARR-POW (Carrier Port Power Unit) for DC-Powered Systems 10-377
- CLAN-BD (Control LAN Circuit Pack) 10-393
- CLSFY-BD (Call Classifier Circuit Pack) 10-411
- CLSFY-PT (Call Classifier Port) 10-412
- CO-BD (Central Office Trunk Circuit Pack) 10-418
- CO-DS1 (DS1 CO Trunk) 10-419
- CO-TRK (CO Trunk) 10-437
- CONFIG (System Configuration) 10-465
- CUST-ALM (Customer-Provided Alarming Device) 10-477
- DATA-BD (Data Channel NetPkt Circuit Pack) 10-480
- DATA-CHL (Data Channel) 10-485
- DATA-CON (Network Control Driver) 10-503
- DAT-LINE (Data Line) 10-505
- DC-POWER 10-515
- DETR-BD 10-519
- DID-BD (Direct Inward Dial Trunk Circuit Pack) 10-519
- DID-DS1 (DS1 DID Trunk) 10-520
- DID-TRK (DID Trunk) 10-532
- DIG-BD (Digital Line Circuit Pack) 10-551

Contents

- DIG-IP-STN (Digital IP Station) 10-551
- DIG-LINE (Digital Line) 10-558
- DIOD-DS1 (DS1 DIOD Trunk) 10-584
- DIOD-TRK (DIOD Trunk), DIOD-BD (DIOD Circuit Pack) [G1.2SE] 10-596
- DIOD-TRK (DIOD Trunk) [G1.2SE] 10-596
- DLY-MTCE (MO-DAILY) 10-608
- DS1-BD (DS1 Interface Circuit Pack) 10-611
- DT-LN-BD (Data Line Circuit Pack) 10-695
- DTMR-PT [Dual Tone Multifrequency Port (TTR)] 10-696
- DUPINT (Duplication Interface Circuit Pack) 10-701
- E-DIG-BD (Multi Application Platform Board) 10-721
- E-DIG-RES (TN800 reserve slot) 10-722
- E-DIG-STA (Emulated Digital Line) 10-722
- EMG-XFER 10-733
- EPN-SNTY (EPN Sanity Audit) 10-737
- ERR-LOG (Error Log) 10-739
- ETH-PT (Control LAN Ethernet) 10-740
- ETR-PT (Enhanced Tone Receiver Port) 10-752
- EXP-INTF (Expansion Interface Circuit Pack) 10-761
- EXP-LINK (Expansion Interface Link) 10-815
- EXT-DEV ADMIN? N (External Device Alarm) 10-817
- EXT-DEV ADMIN? Y (External Device Alarm) 10-822
- FL-DATA (Flash Data Consistency) 10-827
- FW-DWNLD (Firmware Download) 10-842
- GPTD-PT [General Purpose Tone Detector Port (CPTR)] 10-869
- H323-BCH (H.323 B-Channel) 10-870
- H323-SGRP (H.323 Signaling Group) 10-872
- H323-STN (H.323 IP Station) 10-880
- HYB-BD (Hybrid Line Circuit Pack) 10-885
- HYB-LINE (Hybrid Line) 10-886
- INADS (INADS Link) 10-912
- IO-PROCR (I/O Processor) 10-916
- IPMEDPRO (IP Media Processor Circuit Pack) 10-919

Contents

- ISDN-LNK (ISDN-PRI Signaling Link Port) 10-934
- ISDN-PLK (ISDN-PRI Signaling Link Port) 10-941
- ISDN-SGR (ISDN-PRI Signaling Group) 10-949
- ISDN-TRK (DS1 ISDN Trunk) 10-977

Volume Three

- JNL-PRNT (Journal Printer Link) 10-1005
- LGATE-AJ 10-1006
- LGATE-BD 10-1006
- LGATE-PT 10-1006
- LIC-ERR (License-Error Mode) 10-1007
- LOG-SVN (Login Security Violation) 10-1015
- MAINT (EPN Maintenance Circuit Pack) 10-1018
- MAPD-BD (MAPD Interface Circuit Pack TN802) 10-1037
- MAPD-RES (TN802 reserve slot) 10-1068
- MEDPRO (Media Processor MAPD Circuit Pack) 10-1069
- MEDPROPT (TN802/TN2302 MED PRO DSP PORT) 10-1081
- MEM-BD (Memory) 10-1089
- MEMORY 10-1095
- MIS (Management Information System) 10-1095
- MODEM-BD (Modem Pool Circuit Pack) 10-1096
- MODEM-PT (Modem Pool Port) 10-1096
- MMI-BD 10-1114
- MMI-LEV (Multimedia Interface Resource Level) 10-1124
- MMI-PT 10-1126
- MMI-SYNC 10-1132
- M/T-ANL (Maintenance/Test Analog Port) 10-1134
- M/T-BD (Maintenance/Test Circuit Pack) 10-1144
- M/T-DIG (Maintenance/Test Digital Port) [G3iV1-1.286, G3iV2-386] 10-1145
- M/T-PKT (Maintenance/Test Packet Bus Port) 10-1158
- NO-LIC (No License) 10-1163
- OPS-LINE (DS1 OPS Line) 10-1166
- PDMODULE, TDMODULE (Data Module) 10-1182

Contents

- PE-BCHL (PRI Endpoint Port) 10-1202
- PI-BD (Processor Interface Circuit Pack) 10-1223
- PI-LINK (Processor Interface Link) 10-1230
- PI-PT (Processor Interface Port) 10-1248
- PI-SCI (System Communication Interface) 10-1253
- PKT-BUS (Packet Bus) 10-1261
- PKT-CTRL (Packet Control Circuit Pack) 10-1273
- PKT-INT (Packet Interface) 10-1290
- PMS-LINK (Property Management System Link) 10-1323
- PMS-PRNT/JNL-PRNT (PMS Printer Link) 10-1331
- POWER (Battery & Battery Charger) for AC-Powered Systems 10-1337
- POWER (Battery & Battery Charger for DC-Powered Systems 10-1348
- PPP-PT (Control LAN Packet/Port) 10-1352
- PR-MAINT (Maintenance Processor [TN2404/TN790 RISC Systems]) 10-1366
- PR-MAINT (Maintenance Processor) 10-1385
- PR-MEM (TN2404/TN790 RISC Memory) 10-1400
- PRI-CDR/SEC-CDR (PRI-CDR Link) 10-1409
- PROC-SAN (Process Sanity Audits) 10-1416
- PROCR (Processor Circuit Pack) 10-1417
- PROCR (TN2404/TN790 RISC Processor Circuit Pack) 10-1424
- RANL-STA (Remote Analog Line (Station) Port) 10-1432
- RDIG-STA (Remote Digital Station) 10-1443
- REM-OFF (Remote Office) 10-1457
- RING-GEN (Analog Ring Generator) 10-1459
- S-SYN-BD (Speech Synthesis Circuit Pack) 10-1468
- S-SYN-PT (Speech Synthesis Port) 10-1469
- SEC-CDR (SEC-CDR Link Maintenance) 10-1483
- SHDW-CIR (Common Shadow Circuit) 10-1483
- SHDW-LNK (Memory Shadowing Link) 10-1494
- SPE-SELEC (SPE Select Switch) 10-1512
- SRP-EPN 10-1516

Contents

- STBY-SPE (Standby SPE) 10-1517
- STRAT-3 (Stratum 3 Clock) 10-1557
- SVC-SLOT (Service Slot) 10-1569
- SW-CTL (Switch Control) 10-1571
- SYNC (Synchronization) 10-1586
- SYS-LINK (System Links) 10-1598
- SYS-PRNT (System Printer) 10-1603
- SYSTEM (System) 10-1609
- TAPE (Tape Unit) [G3iV1.1-286] 10-1611
- TAPE-DAT (Tape Consistency) 10-1641
- TBRI-BD (TN2185 ISDN Trunk-Side BRI) 10-1653
- TBRI-PT (TN2185 ISDN Trunk-Side BRI Port) 10-1662
- TBRI-TRK (TN2185 ISDN Trunk-Side BRI) 10-1686
- TDMODULE (Trunk Data Module) 10-1698
- TDM-BUS (TDM Bus) 10-1699
- TDM-CLK (TDM Bus Clock) 10-1721
- TIE-BD (Tie Trunk Circuit Pack) 10-1736
- TIE-DS1 (DS1 Tie Trunk) 10-1737
- TIE-TRK (Tie Trunk) 10-1755
- TIME-DAY (Time of Day) 10-1781
- TONE-BD (Tone-Clock Circuit Pack) 10-1783
- TONE-PT (Tone Generator) 10-1802
- TRANS-ID (Translation-ID) 10-1814
- TR-LN-BD (Trunk Line Board) 10-1819
- TSC-ADM (Administered Temporary Signaling Connections) 10-1820
- TTR-LEV (TTR Level) 10-1826
- UDS1-BD (UDS1 Interface Circuit Pack) 10-1831
- VAL-BD (Voice Announcements over LAN Circuit Pack) 10-1940
- VAL-PT (Voice Announcements over LAN Packet/Port) 10-1964
- VC-BD 10-1970

Contents

- VC-DSPPT 10-1974
- VC-LEV (Voice Conditioner DSP Port Level) 10-1984
- VC-SUMPT 10-1987
- WAE-PORT (Wideband Access Endpoint Port) 10-1993
- XXX-BD (Common Port Circuit Pack) 10-2001

A Error Messages from Chapter 8: Maintenance Commands A-1

- busyout access-endpoint A-1
- busyout board A-2
- busyout cdr-link A-3
- busyout data-module A-4
- busyout journal-printer A-5
- busyout link A-5
- busyout mis A-6
- busyout modem-pool A-7
- busyout packet-control A-8
- busyout pms-link A-8
- busyout port A-9
- busyout pri-endpoint A-10
- busyout sp-link A-11
- busyout spe-standby A-11
- busyout station A-12
- busyout tdm A-13
- busyout tone-clock A-13
- busyout trunk A-14
- cancel hardware-group A-15
- change circuit-packs A-16
- change synchronization A-17
- change system-parameters maintenance A-17
- clear audits A-28
- clear errors A-28

Contents

- clear interface A-29
- clear isdn-testcall A-30
- clear link A-31
- clear mst A-32
- clear pkt A-32
- clear port A-32
- copy update-file A-33
- disable administered-connection A-34
- disable mst A-35
- disable suspend-alm-orig A-35
- disable synchronization-switch A-35
- disable test-number A-36
- display alarms A-37
- display errors A-39
- display initcauses A-43
- display memory-configuration A-43
- display port A-44
- display synchronization A-44
- display system-parameters maintenance A-45
- display time A-45
- download update-file A-45
- enable administered-connection A-48
- enable mst A-49
- enable suspend-alm-orig A-49
- enable synchronization-switch A-50
- enable test-number A-50
- get vector A-51
- list disabled-mos A-51
- list history A-52
- list isdn-testcall A-52
- list marked-ports A-52
- list measurements A-53
- list mst A-54
- list suspend-alm-orig A-54
- list testcalls A-54

Contents

- mark port A-55
- monitor bcms A-56
- monitor health A-57
- monitor system A-57
- monitor traffic A-58
- monitor trunk A-58
- recycle carrier A-59
- refresh spe-standby A-60
- release access-endpoint A-60
- release board A-61
- release cdr-link A-62
- release data-module A-63
- release journal-printer A-64
- release link A-65
- release mis A-65
- release modem-pool A-66
- release packet-control A-67
- release pms-link A-68
- release port A-68
- release pri-endpoint A-69
- release sp-link A-70
- release spe-standby A-71
- release station A-71
- release tdm A-72
- release tone-clock A-73
- release trunk A-74
- reset board A-75
- reset interface A-76
- reset maintenance A-78
- reset spe-standby A-78
- reset system A-79
- restore announcements A-80
- resume hardware-group A-81
- save announcements A-82
- save translation A-83

Contents

- set expansion-link A-84
- set options A-85
- set signaling-group A-86
- set synchronization A-87
- set tdm A-88
- set time A-89
- set tone-clock A-90
- set vector A-91
- status access-endpoint A-92
- status administered-connection A-93
- status attendant A-94
- status audits A-95
- status bri-port A-95
- status card-mem A-96
- status cdr-link A-97
- status cleared-alarm-notif A-98
- status data-module A-98
- status hardware-group A-99
- status health A-99
- status interface A-100
- status isdn-testcall A-101
- status journal-link A-102
- status link A-102
- status logins A-103
- status mst A-103
- status packet-control A-104
- status periodic-scheduled A-104
- status pms-link A-105
- status pri-endpoint A-105
- status processor-channel A-106
- status signaling-group A-106
- status sp-link A-107
- status station A-108
- status synchronization A-108
- status system A-109

Contents

- status trunk A-109
- status tsc-administered A-110
- status tti A-111
- test access-endpoint A-112
- test alarms A-113
- test analog-testcall A-115
- test board A-117
- test card-mem A-118
- test cdr-link A-119
- test customer-alarm A-120
- test data-module A-120
- test ds1-loop A-121
- test duplication-interface A-123
- test environment A-124
- test hardware-group A-124
- test inads-link A-127
- test interface A-127
- test isdn-testcall A-129
- test journal-printer A-130
- test led A-131
- test link A-131
- test maintenance A-132
- test memory A-132
- test modem-pool A-134
- test network-control A-135
- test packet-control A-136
- test pkt A-137
- test pms-link A-138
- test port A-139
- test pri-endpoint A-140
- test processor A-141
- test shadow-link A-142
- test signaling-group A-143
- test sp-link A-144
- test spe-standby A-144

Contents

- test station A-145
- test synchronization A-146
- test tdm A-147
- test tone-clock A-148
- test trunk A-149
- test tsc-administered A-150
- traceroute A-151
- upgrade software A-153

IN **Index** **IN-1**

About this Book

General

This book has the information needed to monitor, test, and maintain the Avaya MultiVantage™ software running on Avaya DEFINITY® Server SI, and covers many of the faults and troubles that can occur in the system. Most maintenance requirements are simple procedures due to the modular, self-testing nature of the system.

Simple, traditional troubleshooting methods are sometimes sufficient to locate and clear faults. The traditional methods include terminal substitution, visual inspections, continuity checks, and clarification of operating procedures with users.

The information in this book is intended for use by:

- a maintenance technician dispatched to an Avaya DEFINITY Server site in response to a trouble alarm or a user trouble report,
- a maintenance technician located at a remote maintenance facility, or
- the user's assigned maintenance technician. The technician is expected to have a knowledge of telecommunications fundamentals and of Avaya MultiVantage running on Avaya DEFINITY Server SI to the extent that the procedures in this book can be performed, in most cases, without assistance.

Each DEFINITY Server has a customer system manager who is responsible for administration of the system. The maintenance technician should work closely with the system manager.

This book is not intended to solve all levels of troubles. It is limited to troubles that can be solved by using the Alarm Log, Error Log, trouble-clearing procedures, maintenance tests, and traditional troubleshooting methods. If the trouble still has not been resolved, it the responsibility of the maintenance technician to escalate the problem to a higher level of technical support. Escalation should conform to the procedures in the *Technical and Administration Escalation Plan*.

Conventions Used in This Document

The following conventions are used in this document:

- The term “ASAI” is synonymous with CallVisor ASAI.
- All physical dimensions in this book are in English (Foot Pound Second) (FPS) followed by the metric Centimeter Grams Second (CGS) in parenthesis. Wire gauge measurements are in AWG followed by the diameter in millimeters in parenthesis.
- Information you type at the management terminal is shown in the following typeface: **list system-parameters maintenance**
- Information displayed on the management terminal screen is shown in the following typeface: `login`
- Keyboard keys are shown in the following typeface: Enter.
- Circuit pack codes (such as TN2404/TN790 or TN2182B) are shown with the minimum acceptable alphabetic suffix (like the “B” in the code TN2182B).

  Generally, an alphabetic suffix higher than that shown is also acceptable. However, not every *vintage* of either the minimum suffix or a higher suffix code is necessarily acceptable.

  NOTE:
  Refer to *Technical Monthly: Reference Guide for Circuit Pack Vintages and Change Notices*, for current information about the usable vintages of specific circuit pack codes (including the suffix) in a Release 11 system.

- Admonishments used in this book are as follows:

  CAUTION:
  This sign is used to indicate possible harm to software, possible loss of data, or possible service interruptions.

  WARNING:
  This sign is used where there is possible harm to hardware or equipment.

  DANGER:
  This sign is used to indicate possible harm or injury to people.

Organization

This book is organized into two volumes: Volume 1 contains Chapters 1 through 9 and part of Chapter 10, and volume 2 contains the remainder of Chapter 10.

- **Chapter 1, ''Maintenance Architecture''** describes the system's design and maintenance strategy.
- **Chapter 2, ''Circuit Packs and Power''** describes DEFINITY Server circuit packs. It also explains how power is supplied to the system.
- **Chapter 3, ''Management Terminals''** describes the various management terminals that can be used on the system and how to set up the terminals.
- **Chapter 4, ''Initialization and Recovery''** describes the various reset and reboot processes, and discusses how these processes are used to perform maintenance and to recover systems or subsystems that are out of service.
- **Chapter 5, ''Routine Maintenance Procedures''** discusses common maintenance tasks, including: removing and installing circuit packs, removing and restoring power, performing system backups, upgrading software, and various testing and troubleshooting procedures.
- **Chapter 6, ''Reliability Systems: A Maintenance Aid''** provides detailed hardware and functional descriptions as well as additional repair strategy (in addition to the procedures provided in this document) for Standard, High, and Critical Reliability systems.
- **Chapter 7, ''LED Interpretation''** is a quick reference to interpreting circuit pack LEDs.
- **Chapter 8, ''Maintenance Commands and Trouble-Clearing Aids''** has the maintenance commands, and explains how to use these commands using the management terminal. Specific command syntax plus typical forms and display output are also given in the chapter.

- **Chapter 9, ‘‘Packet Bus Fault Isolation and Correction’’** describes Packet Bus maintenance and the interactions of the bus with Packet circuit packs. The chapter also discusses how Packet Bus faults are isolated and corrected.
- **Chapter 10, ‘‘Maintenance Object Repair Procedures’’** has specific troubleshooting and repair instructions for every component in the system. The chapter contains repair procedures for system-alarmed and user-reported troubles. For each MO, a table lists the alarm level, hardware error associated with the MO, and the associated test that caused the error. The test sequences and the specific command line entry required to run the tests are given and a brief description of each test. Explanations of error codes associated with each test are given, as are specific maintenance procedures to be used to resolve each problem.

Each MO is described in a separate section of Chapter 10, ‘‘Maintenance Object Repair Procedures’’. The individual sections are labeled with the name of the MO exactly as the name appears in the Alarm Log; for example, MAINT (for Maintenance circuit pack). The only exception is the MO name for Common Port Circuit Pack maintenance which is XXX-BD. The XXX-BD section contains a set of common tests used by certain circuit packs listed in the section. The common portion of these circuit packs is the generic hardware that interfaces with the Time Division Multiplex (TDM) Bus.

Avaya listens carefully to its readers. The organization of this book is a direct result of user feedback. Your feedback is important. Use the feedback form at the back of this book to send your comments to Avaya.

Safety Precautions

When performing maintenance or translation procedures on the system, users must observe certain precautions. Observe all caution, warning, and danger statements to prevent loss of service, possible equipment damage, and possible personal injury. In addition, the following precautions regarding electromagnetic interference (EMI) and static electricity must be observed.

Electromagnetic Interference

This equipment generates, uses, and can radiate radio frequency energy. Electromagnetic fields radiating from the switch may cause noise in the customer’s equipment. If the equipment is not installed and used in accordance with the instruction book, radio interference may result.

WARNING:
To maintain the EMI integrity of the system, maintenance personnel must ensure that all cabinet panels, covers, and so forth, are firmly secured before leaving the customer’s premises.

Static Electricity

To prevent or reduce electrostatic discharge (ESD), always attach wrist grounding straps before working on switch components or handling circuit packs.

CAUTION:
Electrostatic discharge can damage or destroy circuit packs containing integrated circuits (ICs).

The ESD wrist strap, cable assembly, and spare fuses are packed in a plastic bag and placed in the top of the system cabinet. Use the ESD wrist strap when troubleshooting, performing maintenance, or handling any circuit packs associated with the system.

Class 1 Laser Device

The Avaya DEFINITY Server SI contains a Class 1 Laser device if single-mode fiber optic cable is connected to a remote Expansion Port Network (EPN). The LASER device operates within the following parameters:

Power Output: -5 dBm
Wavelength: 1310 nm
Mode Field Diameter: 8.8 microns

DANGER:
Use of controls or adjustments or performance of procedures other than those specified herein may result in hazardous radiation exposure.

Contact your Avaya representative for more information.

Security Issues

A number of matters concerning maintenance are affected by security issues. For details, be sure to consult the *Avaya Products Security Handbook*.

CAUTION:
Login security is an attribute of the Avaya MultiVantage software on DEFINITY Server SI.

Standards Compliance

The equipment presented in this document complies with the following (as appropriate):

- ITU-T (Formerly CCITT)
- ECMA
- ETSI
- IPNS
- DPNSS
- National ISDN-1
- National ISDN-2
- ISO-9000
- ANSI
- FCC Part 15 and Part 68
- EN55022
- EN50081
- EN50082
- CISPR22
- Australia AS3548 (AS/NZ3548)
- Australia AS3260
- IEC 825
- IEC950
- UL 1459
- UL1950
- CSA C222 Number 225
- TS001

Electromagnetic Compatibility Standards

This product complies with and conforms to the following:

- Limits and Methods of Measurements of Radio Interference Characteristics of Information Technology Equipment, EN55022 (CISPR22), 1993
- EN50082-1, European Generic Immunity Standard
- FCC Parts 15 and 68
- Australia AS3548

NOTE:
The system conforms to Class A (industrial) equipment. Voice terminals meet Class B requirements.

- Electrostatic Discharge (ESD) IEC 1000-4-2
- Radiated radio frequency field IEC 1000-4-3
- Electrical Fast Transient IEC 1000-4-4
- Lightning effects IEC 1000-4-5
- Conducted radio frequency IEC 1000-4-6
- Mains frequency magnetic field IEC 1000-4-8
- Low frequency mains disturbance

The system conforms to the following:

- Electromagnetic compatibility General Immunity Standard, part 1; residential, commercial, light industry, EN50082-1, CENELEC, 1991
- Issue 1 (1984) and Issue 2 (1992), Electrostatic discharge immunity requirements (EN55024, Part 2) IEC 1000-4-2
- Radiated radio frequency field immunity requirements IEC 1000-4-3
- Electrical fast transient/burst immunity requirements IEC 1000-4-4

European Union Standards

Avaya Business Communications Systems declares that the Avaya DEFINITY Server equipment specified in this document bearing the “CE” mark conforms to the European Union Electromagnetic Compatibility Directives.

The “CE” (Conformité Europeénne) mark indicates conformance to the European Union Electromagnetic Compatibility Directive (89/336/EEC) Low Voltage Directive (73/23/EEC) and Telecommunication Terminal Equipment (TTE) Directive (91/263/EEC) and with i-CTR3 Basic Rate Interface (BRI) and i-CTR4 Primary Rate Interface (PRI) as applicable.

The “CE” mark is applied to the following Release 11 products:

- Global AC powered Multi-Carrier Cabinet (MCC)
- DC powered Multi-Carrier Cabinet (MCC) with 25-Hz ring generator
- AC powered Single-Carrier Cabinet (SCC) with 25-Hz ring generator
- AC powered Compact Single-Carrier Cabinet (CSCC) with 25-Hz ring generator
- Enhanced DC Power System

Trademarks and Service Marks

The following are trademarks or registered trademarks of Avaya, Inc.:

- AUDIX®
- Cajun®
- CallVisor®
- Callmaster®
- CentreVu™
- CONVERSANT®
- DEFINITY®
- INTUITY™
- MERLIN®
- MultiVantage™
- Softconsole™
- Transtalk™
- VisAbility™
- VOICE POWER®

The following are trademarks or registered trademarks of AT&T:

- ACCUNET®
- DATAPHONE®
- MEGACOM®
- MULTIQUEST®
- TELSEER®

The following are trademarks or registered trademarks of other companies:

- 4ESS™, 5ESS™ (trademarks of Lucent Technologies, Inc.)
- Acrobat® (registered trademark of Adobe Systems Incorporated)
- Ascend® (registered trademark of Lucent Technologies, Inc.)
- Audichron® (registered trademark of the Audichron Company)
- MS-DOS® (registered trademark of the Microsoft Corporation)
- MicroChannel® (registered trademark of IBM Systems)
- Microsoft® (registered trademark of Microsoft Corporation)
- NetMeeting® (registered trademark of Microsoft Corporation)
- PagePac® (registered trademark of the Dracon Division of the Harris Company)
- PictureTel® (registered trademark of PictureTel Corporation)
- ProShare® (registered trademark of Intel Corporation)
- UNIX® (trademark of X/Open Corporation)
- Zydacron (registration pending for Zydacron Corporation)

How to Order Documentation

In addition to this book, other description, installation and test, maintenance, and administration books are available.

This document and any other Avaya documentation can be ordered directly from the Avaya Publications Center toll free at 1-800-457-1235 (voice) and 1-800-457-1764 (fax). International customers should use +1.410.568.3680 (voice) and +1.410.891.0207 (fax).

How to Comment on This Document

Avaya welcomes your feedback. Contact us through:

email: document@avaya.com

fax: 1-303-538-1741 or to your Avaya representative, and mention this document's name and number, *Maintenance for Avaya DEFINITY Server SI,* 555-233-123.

Your comments are of value to us and help improve our documentation.

Where to Call for Technical Support

Use the following telephone number for the region in which the system is installed.

Organization	Telephone Number
Streamlined Implementation, for missing equipment	1-800-772-5409
USA Technical Service Center	1-800-248-1234
Canada	1-800-387-4268
Technical Service Center (INADS Database Administration)	1-800-248-1111
DEFINITY Helpline	1-800-225-7585
Avaya Toll Fraud Intervention	1-800-643-2353
Avaya Technical Service Center (maintenance/repair)	1-800-242-2121
Avaya Corporate Security	1-800-822-9009 +1-925-224-3401
North America	1-800-248-1111
Central/Latin America, Caribbean (dealers only)	Contact your local representative
United Kingdom	44-1483-308-000
Bahrain	973-218-266
Budapest	36-1238-8334
Moscow	7095-363-6701
Saumur	33-241-534-000
Singapore	65-872-8686
Australia	612-9352-9151
Hong Kong	852-3121-6423
Japan	813-5575-8800
Shanghai	8621-5459-4590
ITAC	1-720-444-9006
Latin/Central America & Caribbean	1-720-444-9998
Budapest	+36-1238-8334
UK	+44-1483-308-000
Canada	1-800-387-4268

Maintenance Architecture

1

The maintenance subsystem is a part of the software that initializes and maintains the system. The software continuously monitors system health, and keeps a record of errors detected in the system. The maintenance subsystem also provides a user interface for on-demand testing.

This chapter provides a brief description of the maintenance strategy and the background information on the system's overall functions. For detailed descriptions of components and subsystems, refer to related topics in Chapter 10, "Maintenance Object Repair Procedures".

How to use the Maintenance book

This procedure begins with the system raising an alarm against a Maintenance Object (MO), a software module that monitors the components of a circuit pack. These components can include:

- Hardware
- System (processor) availability and conditions
- Presence of and physical connections (copper, fiber) to other components
- Presence of certain signals (synchronization, DS1) within specific parameters
- Environment (power, cabinet temperature sensors)

Table 1-1. Alarm levels, reporting conditions and action to take

Alarm level	Description	Reported to INADS?	Reported to console?	What action to take?
MAJOR	Critical service degradation	Y	Yes, after 4 attempts to call INADS	Immediate attention
MINOR	Some service degradation but does not render the system inoperable.	Y	Same as above	Check to see what service is affected
WARNING	Failure that causes no significant service degradation	N[1]	N	Monitor the situation. May be service or equipment interruption or failure outside the switch.

1. Some system-downgraded Warning alarms are reported to INADS.

Alarms are further classified as:

- On-board problems originate in the circuitry on the alarmed circuit pack.
- Off-board problems originate in a process or component that is external to the circuit pack.

To clear system alarms using the appropriate maintenance book:

1. Type **display alarms** and press Enter.
2. A query screen appears (Screen 1-1), where you can chose if you want to see all alarms or if you want to restrict the list to certain kinds of errors.

```
                    ALARM REPORT
 The following options control which alarms will be displayed.
ALARM TYPES
                 Active? y    Resolved? n
                  Major? y       Minor? y      Warning? y
   REPORT PERIOD
              Interval: m      From:   /  /  :      To:   /  /  :
   EQUIPMENT TYPE ( Choose only one, if any, of the following )
                            Cabinet:
                      Port Network:
                      Board Number:
                              Port:
                          Category:
                         Extension:
            Trunk ( group/member ):  /
```

Screen 1-1. Alarm Report query screen

a. The report can be restricted by typing either **y** (yes) or **n** (no) in these fields (shown above in bold):

- Active
- Major
- Minor
- Warning

CAUTION:
*If you choose **n** for major alarms and **y** for minor and warning alarms, you will not see the macro-level information that you may need to determine what is wrong with the system.*

b. The Cabinet, Port Network Board Number, Port and Category fields are described in the "Field descriptions" section.

3. After you have made your choices to tailor the report, press Enter.

   The alarm log displays.

```
                                ALARM REPORT
Port       Maintenance On   Alt     Alarm   Svc    Ack?  Date        Date
           Name        Brd? Name    Type    State  1 2   Alarmed     Resolved
01C1008    DID-TRK      y           MAJOR                03/09/00:30 00/00/00:00
```

Screen 1-2. Alarm Report screen

A DID trunk port in slot 10, carrier C has a MAJOR alarm.

4. Note the value in the `Port` field (01C1008). This is the alarmed port address.

5. Type **display errors** and press Enter.

   A query screen appears, where you can chose to see all the errors or restrict the list to certain kinds of errors. Except for warning levels (Major, Minor, Warning), the screen is the same as Screen 1-1 on page 1-2.

   Unless you suspect a problem occurred within a certain time frame or with a particular component of the system, press Enter at the query screen to display the accumulated system errors (Screen 1-3).

```
                    HARDWARE ERROR REPORT - ACTIVE ALARMS
Port       Mtce     Alt     Err   Aux     First       Last       Err Err Rt/ Al Ac
           Name     Name    Type  Data    Occur       Occur      Cnt Rt  Hr  St
01C1008    DID-TRK          1547        03/09/00:20 03/15/01:18 255 1   7   a  y
```

Screen 1-3. Hardware Error Report - Active Alarms

6. Note Error Type (`Err Type` field) (1547) and `Aux Data`, if present.

7. Find the DID-TRK MO in the Maintenance Object chapter of the appropriate maintenance book.
8. In the first table look up the initial command to run in the MAJOR row of the table (Step 4 indicated that a DID trunk in slot 10, carrier C has a MAJOR alarm).

MO Name (in Alarm Log)	Alarm Level	Initial Command to Run[1]	Full Name of MO
DID-TRK	MAJOR[2]	test port UUCSSpp long	DID Trunk
DID-TRK	MINOR	test port UUCSSpp long	DID Trunk
DID-TRK	WARNING	test port UUCSSpp	DID Trunk

1. *UU* is the universal cabinet number (1 for PPN, 2 - 44 for EPNs), *C* is the carrier designation (A, B, C, D, or E), *SS* is the number of the slot in which the circuit pack resides (01 to 21), and *pp* is the two digit port number (01, 02,...).
2. A MAJOR alarm on a trunk indicates that alarms on these trunks are downgraded by the set options command and that at least 75% of the trunks in this trunk group are alarmed.

9. Type **test port 01C1008 long** and press Enter.

   "01C1008" is the address of the alarmed port (Screen 1-2 on page 1-3 and Screen 1-3 on page 1-3)

10. While the port test is running, look up the Error Type (1537 from Screen 1-3) in the DID Trunk Error Log Entries table (example below).

Table 1-2. DID Trunk Error Log entries

Error Type	Aux Data	Associated Test	Alarm Level	On/Off Board	Test to Clear Value
1537		Port Diagnostic (#35)	MAJ/MIN/WRN	OFF	test port UUCSSpp sh r 1
3840(k)	40965	None			

11. Since the Test to Clear Value (**test port 01C1008 sh r 1**) is very similar to the initial test you ran in Step 11, wait for the results of the port test.
12. When the port test finishes, the following screen appears (Screen 1-4):

```
                              TEST RESULTS

Port      Maintenance Name  Alt. Name  Test No.  Result              Error Code
01C1008   DID-TRK                      35        FAIL                61472
```

Screen 1-4. Test Results screen

13. Find the Port Diagnostic Test (#35 from `Test No.`) in the DID-TRK section of the Maintenance book. Note the `Error Code` (61472).

14. Look in Table 1-3 for Test #35, then “61472” in the Error Code column, and “FAIL” in the Test Result column. See the Description/Recommendation information.

Table 1-3. TEST #35 Port Diagnostic Test

Error Code	Test Result	Description/Recommendation
61472	FAIL	Battery feed test failed. A problem with the incoming CO line was detected. 1. Check the incoming CO line for proper operation. If warranted, refer the problem to the CO. 2. If the CO line checks out Ok, the failure must be on the DID port. Replace the circuit pack.

15. Perform both steps in the Description/Recommendation column.
16. Test the port (**test port 01C1008 long** and press Enter) after all of the recommendations are exhausted.
17. If all tests pass, wait approximately 3-5 minutes for the Alarm and Error logs to clear.
18. Type **display alarms** and press Enter twice.
19. Check that the DID-TRK alarm does not appear in the log.

Field descriptions

`Error type`	Enter error type, or blank
`Error List`	active-alarms, errors, or cleared-errors
`Interval`	h(our), d(ay), w(eek), m(onth), a(ll)
`From:/To:`	Specify time interval by date and time
`Cabinet`	Enter cabinet number (1 - 44)
`Port Network`	Enter port network number (1 - 44)
`Board Number`	Enter 5-character board number in **UUCSS** format: cabinet (1-44), carrier (A-E), slot (0-20)
`Port`	Enter 7-character port address in **UUCSSss** format: cabinet (1-44), carrier (A-E), slot (0-20), circuit (01-31)
`Category`	Enter category name (choose 1 from the list below:

adm-conn	announce	bri/asai	cdr	data-mod
detector	dup-spe	environ	exp-intf	ext-dev
generatr	inads-link	infc	maint	mass-st

mbus	memory	misc	mmi	mnt-test
modem	mssnet	pkt	pms/jrnl	pnc
pncmaint	pnc-peer	procr	quick-st	s-syn
spe	stabd	stacrk	stations	sys-link
sys-prnt	tape	tdm	tone	trkbd
trkcrk	trunks	vc	vsp	wideband
wireless				

`Extension`	Enter assigned extension, or blank
`Trunk`	
`Group`	Enter group number between 1-666
`Member`	Enter group member between 1-255, or blank

Maintenance Objects

The system is partitioned into separate entities called Maintenance Objects (MOs). Each MO is referred to by an upper-case, mnemonic-like name that serves as an abbreviation for the MO. For example, “CO-TRK” stands for “Central Office TRunK”. Each MO is monitored by the system and has its own maintenance strategy. Most MOs are individual circuit packs. Some MOs are hardware components that reside on part of a circuit pack. For example, the TDM bus Clock circuits reside on the Tone/Clock circuit pack. Other MOs, such as cabinet environmental sensors, represent larger subsystems or sets of monitors. Finally, some MOs, such as SYNChronization, represent processes or a combination of processes and hardware.

“Maintenance names” are recorded in the error and alarm logs. Individual copies of an MO are assigned an address that defines the MO’s physical location in the system. These locations appear in the “PORT” field in the alarm and error logs and as output of various commands such as **test board** and **busy tdm-bus**.

Alarm and Error Reporting

During normal operations, software or firmware may detect error conditions relevant to specific MOs. The system attempts to fix or circumvent these problems automatically. However, if a hardware component incurs too many errors, an alarm is raised. Errors are detected in two ways:

- For “in-line” errors, firmware on the component detects the occurrence of an error during ongoing operations.
- For other types of errors, a “periodic test” or a “scheduled test” started by the software detects the error. The technician can run these tests on demand by using the maintenance commands described in Chapter 8, ‘‘Maintenance Commands and Trouble-Clearing Aids’’, and Chapter 10, ‘‘Maintenance Object Repair Procedures’’.

Software puts the error in the error log, and increments the error counter for that error. When an error counter is “active,” (greater than zero), there is a maintenance record for the MO.

Alarms are classified as MAJOR, MINOR, or WARNING, depending on the effect on system operation. They are also classified as ON-BOARD or OFF-BOARD.

— MAJOR alarms identify failures that cause a critical degradation of service. These alarms require immediate attention.

— MINOR alarms identify failures that cause some service degradation but that do not render a crucial portion of the system inoperable. MINOR alarms require attention. However, typically a MINOR alarm affects only a few trunks or stations or a single feature.

— WARNING alarms identify failures that cause no significant degradation of service or equipment failures external to the switch. These failures are not reported to INADS or to the attendant console.

— ON-BOARD problems originate in the circuitry on the alarmed circuit pack.

— OFF-BOARD problems originate in a process or component that is external to the circuit pack.

Alarms are discussed further in Chapter 10, ‘‘Maintenance Object Repair Procedures’’.

Maintenance Testing

Most troubles are reduced to the circuit pack level and can be identified by LEDs on the circuit packs and software reports generated by the system. The maintenance tests in the system are divided into three groups:

- Periodic

  Background tests are performed by software maintenance, usually on an hourly basis. These tests are nondestructive and can be run during high traffic periods without interfering with calls.

- Scheduled

  Background tests performed by software maintenance, usually on a daily basis, are generally more thorough than periodic testing. The tests are considered destructive and are run only during off-hours so as not to interfere with calls.

- Fixed interval

  Background tests performed by software maintenance at regular time intervals (these intervals cannot be administered). These tests run concurrently with periodic maintenance. The following table lists the MOs that run fixed interval testing.

Maintenance Object	Interval (minutes)
POWER	60
SPE-SELEC	60
STBY-SPE	120
TDM-BUS	10
TONE-PT	10

Demand tests are also run by the system when it detects a need or by maintenance personnel in trouble-clearing activities. Demand tests include periodic tests plus other tests required only when trouble occurs. Some nonperiodic demand tests may disrupt system operation. In this book, destructive (service-disrupting) tests are identified in boldface type.

Maintenance personnel can use the management terminal to initiate the same tests that the system initiates. The terminal screen displays the test results.

Protocols

This section describes the protocols handled by the system and the points where these protocols change. Figure 1-1 on page 1-10 is a pictorial guide through data-transmission state changes. Figure 1-1 illustrates the flow of data from DTE equipment, like a terminal or host, through DCE equipment, like a modem or data module, into a communications port on the system. The data flow is shown by solid lines. Below these lines are the protocols used at particular points in the data stream.

Not shown in the Figure 1-1 on page 1-10 is the treatment of D-channels in ISDN-PRI and ISDN-BRI transmissions. PRI and BRI D-channels transport information elements that contain call-signaling and caller information. These elements conform to ISDN level-3 protocol. In the case of BRI, the elements are created by the terminal or data module; for the PRI, the elements are created by the system, which inserts them into the D-channel at the DS1 port.

For ISDN transmissions, therefore, BRI terminals and data modules, and DS1 ports insert, interpret, and strip both layer-2 DCE information and layer-3 elements. Also, the DS1 port passes layer-3 elements to the system for processing.

Layers

The Open System Interconnect (OSI) model for data communications contains seven layers, each with a specific function. Communications to and through the system concern themselves only with layers 1 and 2 of the model.

Layer 1, or the *physical layer,* covers the physical interface between devices and the rules by which bits are passed. Among the physical layer protocols are RS-232, RS-449, X.21, DCP, DS1, and others.

Layer 2, or the *data-link layer*, refers to code created and interpreted by the DCE. The originating equipment can send blocks of data with the necessary codes for synchronization, error control, or flow control. With these codes, the destination equipment checks the physical-link reliability, corrects any transmission errors, and maintains the link. When a transmission reaches the destination equipment, it strips any layer-2 information the originating equipment may have inserted. The destination equipment only passes to the destination DTE equipment the information sent by the originating DTE equipment. The originating DTE equipment can also add layer-2 code to be analyzed by the destination DTE equipment. The DCE equipment treats this layer as data and passes it along to the destination DTE equipment as it would any other binary bits.

Layers 3 to 7 (and the DTE-created layer 2) are embedded in the transmission stream and are meaningful only at the destination DTE equipment. Therefore, they are shown in the figure as “user-defined,” with no state changes until the transmission stream reaches its destination.

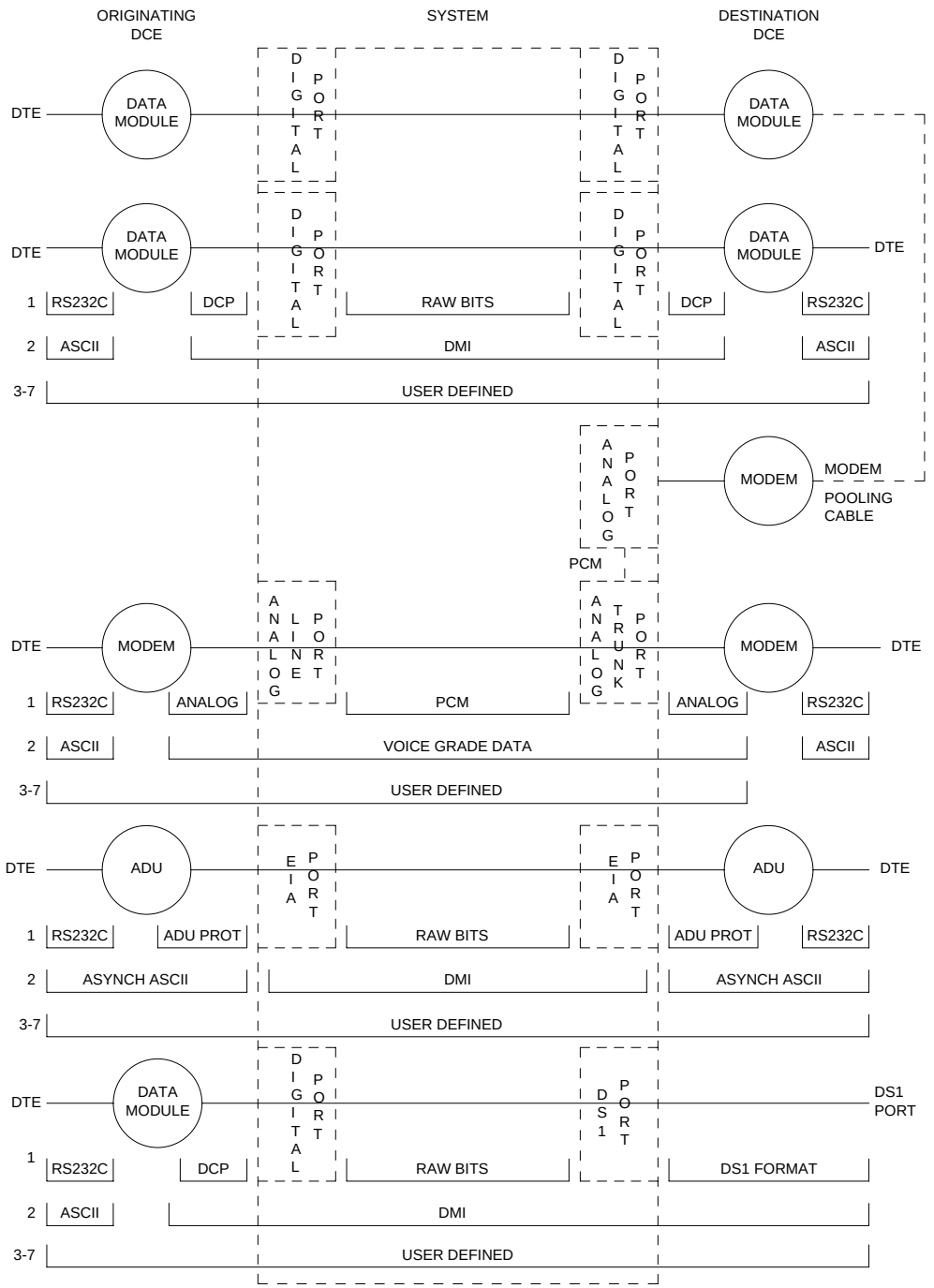

Figure 1-1. Data Transmission States

Usage

The following is a list of the protocols when data is transmitted to and through the system. The list is organized by protocol layers. Refer to Figure 1-1 on page 1-10.

Layer-1 Protocols

Layer-1 protocols are used between the terminal or host DTE and the DCE, used between the DCE equipment and the system port, and used inside the system.

The following layer-1 protocols are used between the DTE equipment and the DCE equipment. DCE equipment can be data modules, modems, or Data Service Units (DSUs). A DSU is a device that transmits digital data to a particular digital endpoint over the public network without processing the data through any intervening private network switches.

- *RS-232* — A common physical interface used to connect DTE to DCE. This protocol is typically used for communicating up to 19.2 kbps
- *RS-449* — Designed to overcome the RS-232 distance and speed restrictions and lack of modem control
- *V.35* — A physical interface used to connect DTE to a DCE. This protocol is typically used for transmissions at 56 or 64 kbps

The following protocols are used at layer 1 to govern communication between the DCE equipment and the port. These protocols consist of codes inserted at the originating DCE and stripped at the port. The DS1 protocol can be inserted at the originating, outgoing trunk port and stripped at the destination port.

- *Digital Communications Protocol (DCP)* — A standard for a 3-channel link. This protocol sends digitized voice and digital data in frames at 160 kbps. The channel structure consists of two information (I) channels and one signaling (S) channel. Each I-channel provides 64 kbps of voice and/or data communication and the S-channel provides 8 kbps of signaling communication between the system and DTE equipment. DCP is similar to ISDN-BRI
- *Basic Rate Interface (BRI)* — An ISDN standard for a 3-channel link, consisting of two 64-kbps bearer (B) channels and one 16-kbps signaling (D) channel. For the implementation of this standard, see *DEFINITY Communications System and System 75 and System 85 ISDN BRI Reference*, 555-025-103
- *Primary Rate Interface (PRI)* — An ISDN standard that sends digitized voice and digital data in T1 frames at 1.544-Mbps or, for countries outside the United States, in E1 frames at 2.048-Mbps. Layer 1 (physical), layer 2 (link), and layer 3 (network) ISDN PRI protocols are defined in *System 75 and 85 — DS1/DMI/ISDN-PRI — Reference Manual*, 555-025-101. At 1.544 Mbps, each frame consists of 24 64-kbps channels plus 8 kbps for framing. This represents 23 B-channels plus 1 D-channel. The maximum user rate is 64 kbps for voice and data. The maximum distances are based on T1 limitations. At 2.048 Mbps, each E1 frame consists of 32 64-kbps channels

- *Analog* — A modulated voice-frequency carrier signal
- *ADU Proprietary* — A signal generated by an ADU. The signal is for communication over limited distances and can be understood only by a destination ADU or destination system port with a built-in ADU
- *Digital Signal Level 1 (DS1)* — A protocol defining the line coding, signaling, and framing used on a 24-channel line. Many types of trunk protocols (for example, PRI and 24th-channel signaling) use DS1 protocol at layer 1
- *European Conference of Postal and Telecommunications rate 1 (CEPT1)* — A protocol defining the line coding, signaling, and framing used on a 32-channel line. Countries outside the United States use CEPT1 protocol

Inside the system, data transmission appears in one of two forms:

1. Raw digital data, where the physical layer protocols, like DCP, are stripped at the incoming port and reinserted at the outgoing port.
2. Pulse Code Modulation (PCM)-encoded analog signals (analog transmission by a modem), the signal having been digitized by an analog-to-digital coder/decoder (CODEC) at the incoming port.

Layer-2 Protocols

Layer-2 protocols are given below:

- *8-bit character code* — Between the DTE equipment and the DCE equipment. Depending on the type of equipment used, the code can be any proprietary code set.
- *Digital multiplexed interface* proprietary — Family of protocols between the originating DCE and the destination DCE for digital transmission. See *DEFINITY Communications System and System 75 and System 85 DS1/DMI/ISDN PRI Reference*, 555-025-101; and *Digital Multiplexed Interface [DMI] Technical Specification,* 555-025-204
- *Voice-grade data* — Between the originating DCE and the destination DCE for analog transmission

Protocol States

Table 1-4 summarizes the protocols used at various points in the data transmission stream. See Figure 1-1 on page 1-10.

Table 1-4. Protocol States for Data Communication

Transmission Type	Incoming DTE to DCE	OSI Layer	Protocols DTE to DCE	DCE to System Port	Inside System
Analog	Modem	1	RS-232, RS-449, or V.35	analog	PCM
		2	8- or 10-bit code	voice-grade data	voice-grade data
	ADU	1	RS-232	ADU proprietary	raw bits
		2	asynchronous 8-bit code	asynchronous 8-bit code	DMI
Digital	Data Module	1	RS-232, RS-449, or V.35	DCP or BRI	raw bits
		2	8-bit code	DMI	DMI
	Digital Signal Level 1 (DS1)	1	any	DS1	PCM or raw bits
		2	8-bit code	DMI or voice-grade data	DMI or voice- grade data

NOTE:
ADU means Asynchronous Data Unit
PCM means Pulse Code Modulated
DMI means Digital Multiplexed Interface

Both the physical-layer protocol and the Digital Multiplexed Interface (DMI) mode used in the connection are dependent upon the type of 8-bit code used at layer 2 between the DTE equipment and DCE equipment, as listed in Table 1-5 and Table 1-6 on page 1-14.

Table 1-5. Physical-Layer Protocol Versus Character Code

Protocol	Code
RS-232	Asynchronous 8-bit ASCII, and synchronous
RS-449	Asynchronous 8-bit ASCII, and synchronous
V.35	Synchronous

Table 1-6. Digital Multiplexed Interface (DMI) Mode Versus Character Code

DMI Mode	Code
0	Synchronous (64 kbps)
1	Synchronous (56 kbps)
2	Asynchronous 8-bit ASCII (up to 19.2 kbps), and synchronous
3	Asynchronous 8-bit ASCII, and private proprietary

Connectivity Rules

Figure 1-1 on page 1-10 implies the following connectivity rules:

- Only the DS1 port and the analog trunk port are trunking facilities (all other ports are line ports). For communication over these facilities, the destination DCE equipment can be a hemisphere away from the system, and the signal can traverse any number of intervening switching systems before reaching the destination equipment.
- Data originating at any type of digital device, whether DCP or BRI, can exit the system at any type of digital port — BRI, digital-line, PRI, DS1, and others; as long as the call destination is equipped with a data module using the same DMI mode used at the call origin. This is because once the data enters the system through a digital port, its representation is uniform (raw bits at layer 1, and DMI at level 2), regardless of where it originated.
- Although data entering the system through an EIA port has not been processed through a data module, the port itself has a built-in data module. Inside the system, port data is identical to digital line data. Data entering the system at a DCP line port can exit at an EIA port. Conversely, data entering the system at an EIA port can exit at any DCP line port. The destination data module must be set for Mode-2 DMI communication.
- Voice-grade data can be carried over a DS1 facility as long as the destination equipment is a modem compatible with the originating modem
- If a mismatch exists between the types of signals used by the endpoints in a connection (for example, the equipment at one end is an analog modem, and the equipment at the other end is a digital data module), a modem-pool member must be inserted in the circuit. When the endpoints are on different switches, it is recommended that the modem-pool member be put on the origination or destination system. A modem-pool member is always inserted automatically for calls to off-premises sites via analog or voice-grade trunking. For internal calls, however, the systems are capable of automatically inserting a modem-pool member.

- Data cannot be carried over analog facilities unless inside the system it is represented as a Pulse Code Modulation (PCM)-encoded analog signal. To do this for data originating at a digital terminal, the signal enters the system at a digital port and exits the system at a digital port. The signal then reenters the system through a modem-pool connection (data-module to modem to analog-port) and exits the system again at an analog port.
- Although DS1 is commonly called a trunk speed, here it names the protocol used at layer 1 for digital trunks. Some trunks use different signaling methods but use DS1 protocol at layer 1 (for example, PRI and 24th-channel signaling trunks).

Disconnect Supervision

Disconnect supervision means the CO has the ability to release a trunk when the party at the CO disconnects, and the system is able to recognize the release signal. In general, a CO in the United States provides disconnect supervision for incoming calls but not for outgoing calls. Many other countries do not provide disconnect supervision on either incoming or outgoing calls.

The system must provide the assurance that at least one party on the call can control the dropping of the call. This avoids locking up circuits on a call where no party is able to send a disconnect signal to the system. Internal operations must check to be sure one party can provide disconnect supervision. An incoming trunk that does not provide disconnect supervision is not allowed to terminate to an outgoing trunk that does not provide disconnect supervision.

In a DCS environment, an incoming trunk without disconnect supervision can terminate to an outgoing DCS trunk connecting two nodes. The incoming trunk is restricted from being transferred to a party without disconnect supervision on the terminating node.

This is because, through messaging, the terminating node knows the originating node cannot provide disconnect supervision. This messaging is not possible with non-DCS tie trunks, and the direct call is denied.

Some two-wire loop start trunks outside the United States provide busy tone disconnect in place of line signals. For these trunks, an adjunct can be attached to the trunk to listen for busy or other disconnect tone. When a tone is detected, the adjunct sends line signals for disconnect to the system.

Administration is provided for each trunk group to indicate whether it provides disconnect supervision for incoming calls and for outgoing calls.

Transfer on Ringing

A station or attendant may conference in a ringing station or transfer a party to a ringing station. When a station conferences in a ringing station and then drops the call, the ringing station is treated like a party without disconnect supervision. However, when a station transfers a party to a ringing station, the ringing station party is treated like a party with disconnect supervision. Two timers (Attendant Return Call Timer and Wait Answer Supervision Timer) are provided to ensure the call is not locked to a ringing station.

Conference, Transfer, and Call-Forwarding Denial

If a station or attendant attempts to connect parties without disconnect supervision together, the following is possible:

- *Digital Station or Local Attendant Transfer*: if a digital station attempts to transfer the two parties together, the call appearance lamp flutters, indicating a denial. If transferring to a DCS trunk, the denial may drop the call since the transfer is allowed and the other system is queried for disconnect supervision.
- *Analog Station Transfer*: if an analog station attempts to transfer two parties together by going on-hook, the analog station is no longer on the call and the transfer cannot be denied.
- *Centralized Attendant Service (CAS) Attendant Transfer*: if a CAS attempts to transfer two parties together by pressing the release key, the release link trunk is released and the branch attempts a transfer by going on-hook
- *Station Conference/Dropout*: if a station conferences all parties, the conference is allowed since the station has disconnect supervision. When the station is dropped from the call, the call is dropped since the other parties do not have disconnect supervision.
- *Station Call Forwarding*: if a station is call forwarded off-premise to a trunk without disconnect supervision, the calling party without disconnect supervision is routed to the attendant

Table 1-7 on page 1-17 lists the various protocols, with applications and maximum limitations.

Table 1-7. Protocols Used in DEFINITY

Protocol	Applications	Maximum Data Rate	Maximum Distance
DCP	Digital switch to data endpoints	64 kbps	5000 feet (1524 m) for data 3000 feet (915 m) for voice
RS-232	System to administration terminal. Data module to host computer	19.2 kbps	50 feet (15.2 m)
	Data module to printer	64 kbps	17 feet (5.9 m)
	Data module for downloading and high-speed data transfer	64 kbps	17 feet (5.9 m)
	EIA interface (Data line to ADU)	19.2 kbps 9.6 kbps 4.8 kbps 2.4 kbps 1.2 kbps 0.3 kbps	2000 feet (610 m) 5000 feet (1524 m) 7000 feet (2130 m) 12,000 feet (3654 m) 20,000 feet (6100 m) 40,000 feet (12200 m)
RS-449	Processor Interface to Processor Interface	19.2 kbps 9.6 kbps 4.8 kbps 2.4 kbps	200 feet (61 m) 400 feet (122 m) 800 feet (244 m) 1600 feet (488 m)
SSI	715 BCS-2 to Processor Interface 500 series printers to Processor Interface	56 kbps	5000 feet (1524 m)
BISYNC	Processor Interface line controller to host computer for terminal emulation (9.6 kbps)	2.4 kbps 4.8 kbps 9.6 kbps	
BX.25	Communication interface to DCS, ISDN, or AUDIX	9.6 kbps	
SDCPI	Data module to Processor Interface	64 kbps	17 feet (5.9 m)
RS-366	Host computer to ACU Data module to ACU	 64 kbps	50 feet (15.2 m) 17 feet (5.9 m)
V.35	Data module to data endpoints	56 kbps	50 feet (15.2 m)

Continued on next page

Table 1-7. Protocols Used in DEFINITY — *Continued*

Protocol	Applications	Maximum Data Rate	Maximum Distance
Category A	Data modules to terminals or cluster controller	64 kbps	500 feet (152 m)
	Data module in ASCII emulation mode	9.6 kbps	
ISDN-BRI	Communication interface to ISDN-BRI S/T	64 kbps	655 feet (199.3 m) to network interface or repeater 1310 feet (399.3 m) system to system
	ISDN-BRI U	160 kbps	18,000 feet (5486.4 m) from system to network interface, and then ~2000 feet to phone
ISDN-PRI	Communication interface to ISDN-PRI	64 kbps	655 feet (199.3 m) to network interface or repeater 1310 feet (399.3 m) system to system

NOTE:
ADU means Asynchronous Data Unit
BCS means Business Communications System
ACU means Automatic Call Unit

Transmission Characteristics

The system transmission characteristics comply with the American National Standards Institute/Electronic Industries Association (ANSI/EIA) standard RS-464A (SP-1378A). The following tables list some general switch transmission characteristics.

Frequency Response

Table 1-8 lists the analog-to-analog frequency response for station-to-station or station-to-CO trunk, relative to loss at 1 kHz for the United States.

Table 1-8. Analog-to-Analog Frequency Response

Frequency (Hz)	Maximum Loss (dB)	Minimum Loss (dB)
60	—	20
200	5	0
300 to 3000	1	-0.5
3200	1.5	-0.5
3400	3	0

Table 1-9 lists the analog-to-digital frequency response of the system for station or CO-trunk-to-digital interface (DS0), relative to loss at 1 kHz for the United States.

NOTE:
The following numbers apply only to DCP or BRI station types. They do not apply to IP stations.

Table 1-9. Analog-to-Digital Frequency Response

Frequency (Hz)	Maximum Loss (dB)	Minimum Loss (dB)
60	—	20
200	3	0
300 to 3000	0.5	-0.25
3200	0.75	-0.25
3400	1.5	0

Insertion Loss for Port-to-Port; Analog or Digital

Table 1-10 lists the insertion loss in the system for different connection types for the United States. Table 1-11 shows the overload and cross-talk characteristics.

NOTE:
The following numbers apply only to DCP or BRI station types. They do not apply to IP stations.

Table 1-10. Insertion Loss for the United States

Typical Connections	Nominal Loss (dB) at 1 kHz
On-premises to on-premises station	6
On-premises to off-premises station	3
Off-premises to off-premises station	0
On-premises station to 4-wire trunk	3
Off-premises station to 4-wire trunk	2
Station-to-trunk	0
Trunk-to-trunk	0

Table 1-11. Overload and Crosstalk

Overload level	+3 dBm0
Crosstalk loss	>70 dB

Intermodulation Distortion

Table 1-12 lists the intermodulation distortion in the system for analog-to-analog and analog-to-digital, up to 9.6 kbps data

NOTE:
The following numbers apply only to DCP or BRI station types. They do not apply to IP stations.

Table 1-12. Intermodulation Distortion

Four-Tone Method	Distortion
Second-order tone products	>46 dB
Third-order tone products	>56 dB

Quantization Distortion Loss

Table 1-13 lists the quantization distortion loss in the system for analog port to analog port.

NOTE:
The following numbers apply only to DCP or BRI station types. They do not apply to IP stations.

Table 1-13. Quantization Distortion Loss

Analog Port-to-Analog Port	
Signal Level	Distortion Loss
0 to -30 dBm0	>33 dB
-40 dBm0	>27 dB
-45 dBm0	>22 dB

Table 1-14 lists the quantization distortion loss in the system for analog port to digital port and digital port to analog port.

Table 1-14. Quantization Distortion Loss

Analog Port-to-Digital Port or Digital Port-to-Analog Port	
Signal Level	Distortion Loss
0 to -30 dBm0	>35 dB
-40 dBm0	>29 dB
-45 dBm0	>25 dB

Terminating Impedance: 600 Ohms nominal
Trunk balance impedance (selectable): 600 Ohms nominal or complex Z [350 Ohms + (1 k Ohms in parallel with 0.215uF)]

Impulse Noise

On 95% or more of all connections, the impulse noise is 0 (hits) in five minutes at +55 dBrnC (decibels above reference noise with C-filter) during the busy hour.

ERL and SFRL Talking State

Echo-Return Loss (ERL) and Single-Frequency Return Loss (SFRL) performance is usually dominated by termination and/or loop input impedances. The system provides an acceptable level of echo performance if the ERL and SFRL are met.

Station-to-station	ERL should meet or exceed 18 dB SFRL should meet or exceed 12 dB
Station to 4-wire trunk connection	ERL should meet or exceed 24 dB SFRL should meet or exceed 14 dB
Station to 2-wire trunk connection	ERL should meet or exceed 18 dB SFRL should meet or exceed 12 dB
4-wire to 4-wire trunk connection	ERL should meet or exceed 27 dB SFRL should meet or exceed 20 dB

Peak Noise Level

DCP or BRI phones only	decibels above reference noise with C-filter)
Analog to analog	20 dBrnC
Analog to digital	19 dBrnC
Digital to analog	13 dBrnC

Echo Path Delay

DCP or BRI phones only	
Analog port to analog port	≤ 3 ms
Digital interface port to digital interface port	≤ 2 ms

Service Codes

Service codes (for the United States only) are issued by the Federal Communications Commission (FCC) to equipment manufacturers and registrants. These codes denote the type of registered terminal equipment and the protective characteristics of the premises wiring of the terminal equipment ports.

Private line service codes are as follows:

- 7.0Y — Totally protected private communications (microwave) systems
- 7.0Z — Partially protected private communications (microwave) systems
- 8.0X — Port for ancillary equipment
- 9.0F — Fully protected terminal equipment
- 9.0P — Partially protected terminal equipment
- 9.0N — Unprotected terminal equipment
- 9.0Y — Totally protected terminal equipment

The product line service code is 9.0F indicating it is terminal equipment with fully protected premises wire at the private line ports.

Facility Interface Codes

A Facility Interface Code (FIC) is a five-character code (United States only) that provides the technical information needed to order a specific port circuit pack for analog private lines, digital lines, MTS lines, and WATS lines.

Table 1-15 through Table 1-17 on page 1-25 list the FICs. Included are service order codes, Ringer Equivalency Numbers (RENs), and types of network jacks that connect a line to a rear panel connector on a carrier.

Table 1-15. Analog Private Line and Trunk Port Circuit Packs

Circuit Pack	FIC	Service Order Code	Network Jack
TN742 and TN747B Off-Premises Station Port, and TN746B Off-Premises Station Port or On-Premises Station port	0L13C	9.0F	RJ21X
TN760/B/C/D Tie Trunk	TL31M	9.0F	RJ2GX

Table 1-16. Digital Trunk Port Circuit Packs

Circuit Pack	FIC	Service Order Code	Network Jack
TN1654 and TN574 DS1 Converter; TN722B DS1 Tie trunk; TN767 and TN464 DS1 Interface; TN2464	04DU9B,C	6.0P	RJ48C and RJ48M

Table 1-17. MTS and WATS Port Circuit Packs

Circuit Pack	FIC	Ringer Equivalency Number (REN)	Network Jack
TN742 and TN746B Analog Line	02LS2	None	RJ21 and RJ11C
TN747B Central Office Trunk	02GS2	1.0A	RJ21X
TN753 DID Trunk	02RV2-T	0,0B	RJ21X
TN2404/TN790 Processor	02LS2	1.0A	RJ21X
TN1648 System Access and Maintenance	02LS2	0.5A	RJ21X

Multimedia Interface (MMI)

The Multimedia Interface handles the following protocols:

- International Telecommunications Union (ITU) H.221 — Includes H.230, H.242, H.231, and H.243 protocol
- American National Standards Institute (ANSI) H.221 — Includes H.230, H.242, H.231, and H.243 protocol
- BONDING (Bandwidth On Demand INoperability Group) Mode 1
- ESM HLP HDLC Rate Adaptation

The Vistium Personal Conferencing System is supported either through the 8510T BRI terminal or directly through the Vistium TMBRI PC board.

Using the World Class Core (WCC) BRI interface, most desktop multimedia applications are supported through the Personal Computer's BRI interface.

Circuit Packs and Power

2

This chapter discusses the hardware configurations contained within and supported by the DEFINITY Servers. Where appropriate, detailed information down to the circuit pack level is provided. This chapter also discusses the power sources required to enable the various components within the system.

Circuit Packs

For circuit pack information, please see the ***Avaya MultiVantage Hardware Solutions Guide***.

Power

There are two basic powering options available with the DEFINITY Server SI. These options include AC and DC. The cabinets and their associated power supplies can be powered by 120/208 volts AC either directly or from a Universal Power Supply (UPS) system. Alternatively, the cabinets and their power supplies may be powered by -48 volts DC from a battery power plant.

Each control cabinet in an AC-powered system has an internal battery that provides a short term holdover to protect the system against short power interruptions. This method is known as the Nominal Power Holdover Strategy. The battery is connected so that it automatically provides power if the AC service fails. The time and extent of the holdover varies according to the type of cabinet and to whether or not the system has a duplicated control complex.

Table 2-1 summarizes the response to the interruption of power service in systems without an internal holdover battery.

Table 2-1. Response to Power Service Interruption (without Internal Holdover Battery)

Cabinet Power Interruption	Less Than Power Supply Decay	Greater Than Power Supply Decay
-48 volt DC external power or multicarrier cabinet with UPS, no internal battery.	None on system, some impact on 48-volt powered circuits.	All calls dropped, system reloads.

The next two tables indicate various responses to the interruption of power service in DEFINITY Servers equipped with an internal holdover battery.

Table 2-2 on page 2-3 provides a summary of holdover times. Table 2-3 on page 2-3 indicates the types of cabinet power interruption based on power holdover durations.

Table 2-2. Response to Power Service Interruption with an Internal Holdover Battery

System and Configuration	Cabinet	Holdover for Entire Cabinet (in seconds)	Holdover for Entire Control Carrier (in minutes)
Standard	PPNMCC	10	10
High, Critical	PPNMCC	10	5
Standard/High, Critical	PPN SCC/ESCC	1/4	2
Standard/High, Critical[1]	EPN MCC	15	none
Standard/High, Critical	EPN SCC/ESCC	1/4	none

1 The holdover times listed are in effect if the EPN contains a TN775 maintenance circuit pack. However, if the EPN contains a TN775B maintenance circuit pack, the holdover time for the entire cabinet is 10 seconds, and the holdover time for the control carrier is 10 minutes.

Table 2-3. Types of Cabinet Power Interruption

System and Cabinet	Shorter Holdover Than Entire Cabinet	Longer Holdover than Entire Cabinet, Shorter Holdover than Control Carrier	Longer Holdover Than Control Carrier
PPN SCC	No calls dropped	All calls dropped	System reloads
EPN SCC	No calls dropped	All calls dropped	System reloads

NOTE:
When EPN power is interrupted for greater than the cabinet holdover but less than the control carrier holdover, calls in the control carrier are held for the duration of the interruption but are dropped when power is restored.

Single-Carrier Cabinets

In single-carrier cabinets, there is no internal AC wiring or distribution and no software interaction with the power system. The power supplies themselves take about 250 milliseconds for the voltages to drop below limits.

The control cabinet that houses the Switch Processing Element (SPE) is the only cabinet that has an internal battery reserve. All other control cabinets and port cabinets have the 250 millisecond power supply decay delay, after which all connections and links associated with the cabinets are dropped.

The SPE control cabinet has a battery that furnishes power to the processor memory complex for a minimum of two minutes if the battery is fully charged. This battery is recharged after power is restored, but the charging process is not monitored by the system. The cabinet is not able to detect AC power loss, and it notices only a DC power output failure as the power supply output decays.

The memory contents are preserved, and the processor continues operating during the two minute period. However, the tone-clock circuit pack is not held over, and as a result, no connections are possible. The battery does not supply all the voltages necessary for the internal modem circuit on the processor circuit pack. As a result, no call is originated to INADS, and the switch cannot answer any calls. Thus, the switch cannot report any internal or external alarms during this period. After two minutes (depending on the condition of the battery), the processor and memory are lost, and the system is totally inactive.

If power is restored in less than 250 milliseconds, no calls are dropped. If power is restored between 250 milliseconds and two minutes, all calls are dropped, and memory is maintained. However, since the tone-clock was lost, the system undergoes a reset once the AC restoral process clears all calls and the alarm log (in which errors are retained). The switch keeps a record of the restart in the error log, but it might not detect a power error if the outage is between 1/4 of a second and one minute, during which time only a loss of clock and not a loss of the power failure that caused the loss of clock is logged. After one minute, a power error is logged. If the outage exceeds the battery holdover interval, the error logs and alarm logs are lost (since they cannot be saved to tape). Depending on the size of the system, it can take up to one minute to restore service to the ports. After a power outage of two minutes following the restoral of AC power, the system re-initializes from the tape. It takes about 10 minutes to restore service. Again, if the customer has frequent power outages or critical service needs, an external UPS or DC power system should be considered.

NOTE:
For more power control information, refer to AC-POWER, DC-POWER, and POWER maintenance objects.

Management Terminals

3

General

Maintenance personnel can use the management terminal to initiate the same tests that the system initiates. Test results appear on the terminal screen. This chapter illustrates management terminals, explains how to use them, and identifies the typical maintenance tasks that can be performed from them. This chapter discusses the following topics:

- "Management Terminals"
- "System Login Procedure"
- "Password Aging"
- "Administrable Logins"
- "System Logoff Procedure"
- "Switch-Based Bulletin Board"
- "DEC VT220 Terminal"

Management Terminals

The maintenance interface for the system technician is the management terminal also referred to as an administration terminal.

The following terminals are supported as administration terminals:

- 715 BCS
- 2900/715 BCS
- 715 BCS-2

In a standard reliability system, the terminal connects to the Processor circuit pack. In the PPN of a high or critical reliability system, the administration terminal connects to the Duplication Interface circuit pack in the PPN. In the EPN of a standard reliability system or of a high or critical reliability system, the administration terminal connects to the Maintenance circuit pack in the EPN.

Duplication Interface circuit pack A controls and monitors the same environment leads as the Maintenance/Tape Processor in a PPN system without high or critical reliability. Duplication Interface circuit pack A also supports the serial channel to the terminal in a PPN for a high or critical reliability system. The terminal connects to Duplication Interface circuit pack A via a connector, labeled **DOT** (Duplication Option Terminal), on the back of cabinet A. At any time, the terminal may be disconnected from the Duplication Interface circuit pack A and connected directly to the active processor circuit pack by attaching the terminal to the connector labeled **TERM**. This connection should be made only if the terminal fails to function, since a problem with the Duplication Interface circuit pack A may be present.

Typical tasks that can be performed at the terminal are shown below.

- Display Error and Alarm logs
- Test circuit packs
- Test system functions
- Busyout and release system equipment
- Reset the system
- Monitor the system
- Check status of maintenance objects
- Check system translations

Most maintenance functions performed at the local administration terminal can also be done remotely at the INADS (Initialization and Administration System).

Terminal Keyboard

The keyboard is equipped with cursor keys, editing keys, and transaction keys. The three types of keys are described here.

Cursor Keys: Cursor keys are used to move the cursor between fields and pages on a screen. The cursor must be positioned on a field before the user can add or change information in that field.

Editing Keys: Two editing keys, BACKSPACE and Clear, are provided. BACKSPACE is used to erase the character at the current cursor position. The cursor moves one position to the left each time the key is pressed. If the cursor is at the first position of the data entry field, it erases the character at the first position. Clear when pressed simultaneously with the Shift is used to clear all data in a field on a screen. The cursor must be positioned at the field the user wants to clear before Clear is pressed.

Transaction Keys: Three transaction keys, Cancel, Enter, and Help, are provided. CANCEL is used to erase a screen or command. Once the key is pressed, the system returns the user to the command (tasks request) level and asks for a new command. Enter is used to store the data entered on a screen in the system's memory. Help displays information on the type of data that can be entered into the field associated with the current cursor position. The system displays all the permissible entries the user can input for that field. This key can be pressed at thanker command" level to obtain a list of all commands.

System Login Procedure

To log into the system:

1. Turn on the administration terminal.

   `login` appears on the screen.

2. Enter your login name and press Enter.

   `password` appears on the screen.

3. Enter your password and press Enter.

   For security reasons, the password is not displayed as you type it.

   - If an invalid login or password name is entered, `login incorrect` appears on the screen. Repeat the procedure.
   - If the system recognizes the login and password name, the software version and following information appears on the screen:

     Terminal Type (Enter 513, 715, VT220, 4410, or 4425): [513]

     The 513 in brackets [513] is the system default terminal.

4. For your terminal type, complete one of the following:

   a. If the terminal is a 513 BCT, press Enter.

   b. If the terminal is a 610 BCT or a 615 MT that has a 513 emulation cartridge, press Enter.

   c. If the terminal is a 610 BCT or a 615 MT that does not have a 513 emulation cartridge, enter 4410 and press Enter.

   d. If the terminal is any other of the types listed, enter the terminal type and press Enter.

   `Suppress Alarm Origination: [y]` appears on the screen.

5. Set INADS alarm origination if you logged in as craft.
   - Unless you are in a special situation, enter y to suppress Alarm Origination and reduce trouble tickets. The **test inads-link** command works regardless of the INADS Alarm Origination setting.
   - Enter n to allow alarm origination.
6. Press Enter.

   `enter command` appears on the screen.

   Enter a command, or press Help to list permissible commands.

The password expiration screen appears when you log in. If your password is expired, you are prompted to enter a new password. If your password is within 7 days of the expiration date, you see the message:

```
WARNING: Your password will expire in X days
```

NOTE:
If several users are logging in and out at the same time, a user may see the message “Transient command conflict detected; please try later”. After the “users” have completed logging in or out, the terminal is available for use.

Command Line Details

After a successful login, `enter command` appears on the screen. You can enter a command.

A command is made up of multiple words that are typed on the keyboard and that instruct the system to perform a particular task. The system’s command structure follows the format: Action, Object, and Qualifier.

The first word entered is the *Action*. It specifies the operation to be done (for example, test, display, or reset).

The second word entered is the *Object*. It specifies the object to receive the action (for example, station, trunk group, or hunt group).

The third word(s) entered is/are the *Qualifier*. The Qualifier is one or more words or digits used to further identify or complete the Object. Depending on the Object used, a Qualifier may or may not be used.

An example of a command line used to do a short test twice on a station with the extension number 1212 is: *test station 1212 short r 2*. In this example, *test* is the Action, *station* is the Object, and *1212 short r 2* is the Qualifier.

Spaces separate the Action, Object, and Qualifier on the command line. Command line words do not have to be completely spelled out. All that is required is to type enough letters to make the word unique.

Screen Forms

After the user completes a command line, the terminal displays the appropriate screens. Use the keyboard to enter information into the screens and change system translations, and to display errors and alarms. Each screen consists of a title, page number, body area, and a help and error message line. Specific screen forms exist for each type of administrable function.

Administrator's Guide for Avaya MultiVantage Software contains detailed information and examples of the screen forms generated by the system.

To Display a Login

1. Type **display login [login name]** and press Enter.

   The following information for the login appears:

   - Name
   - Login type
   - Service level
   - Disable following a security violation value
   - Access to Inads Port value
   - Password aging cycle length
   - Facility test call notification and acknowledgment
   - Remote access notification and acknowledgment

To List Logins

1. Type **list logins** and press Enter.

   The following information for all current logins appears:

   - Name
   - Service level
   - Status (active, inactive, disabled, svn-disabled, void)
   - Expiration Date

     Expiration date shows the date set on the Access Security Gateway screen for the expiration of this login ID. If a login ID requiring ASG authentication has expired, the login ID for the standard login is not available.
   - Password Aging Cycle Length

     Password Aging Cycle Length is set on the login administration screen and shows the number of days the password remains valid.

   The system displays only those logins with the same, or lower, service level as the requestor.

To Remove a Login

1. Type **remove login [login name]** and press Enter.

   The Login Administration screen appears.

2. Press the ENTER key to remove the login, or press Cancel to exit the remove login procedure without making a change.

Testing a Login

1. Enter your login name at the login prompt.

```
Login: telmgr

Password:
```

Screen 3-1. Login Prompt screen

After you enter the correct login name and password and the login is administered correctly, the command line interface appears.

Password Aging

Password aging is an optional feature that the super-user administering the logins can activate. The password for each login can be aged starting with the date the password was created, or changed, and continuing for a specified number of days (1 to 99). If a login is added or removed, the “Security Measurement” reports are not updated until the next hourly poll, or a **clear measurements security-violations** command is entered. Once a non-super-user has changed the password, the user must wait 24 hours to change the password again.

The Password Expiration screen appears when you log in (see Screen 3-2). If your password is expired, the system prompts you to enter a new password. If your password is within 7 days of the expiration date, you see the message:

```
WARNING: Your password will expire in X days
```

```
        Login: telmgr

    Password:
    Your Password has expired, enter a new one.

 Reenter Current Password:

            New Password:

    Reenter New Password:
```

Screen 3-2. Password Expiration Screen

Administrable Logins

The system is delivered to the customer with one customer “super-user” login/password defined. The customer then administers additional customer login/passwords as needed. The super-user login has full customer permissions and can customize any customer login that he/she creates.

Adding Customer Logins and Assigning Initial Password

The system provides enhanced login/password security by adding a security feature that allows users to define their own logins/passwords and to specify a set of commands for each login. The system allows up to 20 customer logins. Each login name can be customized and must be made up of from 3 to 6 alphabetic/numeric characters, or a combination of both. A password must be from 4 to 11 characters in length and contain at least 1 alphabetic and 1 numeric symbol.

To add a customer login you must be a super-user, have administrative permissions, and:

1. Type **add login [name]** and press Enter to access the Login Administration screen.
2. Enter your super-user password in the Password of Login Making Change field on the Login Administration screen.

   The login name entered with **add login [name]** appears in the Login’s Name field.
3. Enter “customer” in the Login Type field.

   The system default for Login Type is “customer.” The maximum number of customer logins of all types is 11.
4. Enter super-user or non-super-user in the Service Level field. Default is non-super-user.
   - “super-user” gives access to the **add, change, display, list,** and **remove** commands for all customer logins and passwords. The super-user can administer any mix of super-user/non-super-user logins up to a total of ten additional system logins.
   - “non-super-user” permissions are limited by restrictions specified by the super-user when administering the non-super-user login. A non-super-user can change his/her password with permission set by the super-user, however once a password has been changed the non-super-user must wait 24 hours before changing the password again. A non-super-user cannot change other user passwords, login characteristics, or permissions.

5. Enter **y** in the Disable Following a Security Violation field to disable a login following a login security threshold violation. Default is `y`.

   This field appears when SVN Login Violation Notification is enabled.

6. Enter **y** in the Access to INADS Port field to allow access to the remote administration port. Default is `n`.

   This field appears when customer super-user access to the INADS Remote Administration Port is enabled.

7. Enter a password for the new login in the Login's Password field. A password must be from 4 to 11 characters in length and contain at least 1 alphabetic and 1 numeric symbol. Valid characters include numbers, and!&*?;'^(),.:- (the system will not echo the password to the screen as you type).

8. Re-enter the password in the `Login's Password` field. The system will not echo the password to the screen as you type.

9. Enter the number of days (1 to 99) from the current day, that you want the password to expire, in the `Password Aging Cycle Length` field. If a you enter a blank in this field, password aging does not apply to the login.

10. Decide whether or not to leave **y** in the `Facility Test Call Notification` field. If **y** is selected, the user receives notification at logoff that the facility test call feature access code is administered. If you do not want the notification to appear, set the field to **n**.

    CAUTION:
    Leaving The facility Test Call administered after logging off poses a significant security risk.

11. Decide whether or not to leave **y** in the `Facility Test Call Notification Acknowledgment Required` field. If **y** is selected, the user is required to acknowledge that they wish to logoff while Facility Test Call is still administered. If you do not want to force the user to acknowledge, set the field to **n**. This field appears when `Facility Test Call Notification` field is **y**.

12. Decide whether or not to leave **y** in the `Remote Access Notification` field. If **y** is selected, the user receives notification at logoff that remote access is still administered. If you do not want the notification to appear, set the field to **n**.

    CAUTION:
    To Leave Remote Access feature administered after logging off poses a significant security risk if you are using the feature in conjunction with the Facility Test Call feature.

13. Decide whether or not to leave **y** in the `Remote Access Acknowledgment Required` field. If **y**, the user is required to acknowledge that they wish to logoff while remote access is still administered. If you do not want to force the user to acknowledge, set the field to **n**. This field appears when the Facility Test Call Notification field is **y**.

```
                        LOGIN ADMINISTRATION

            Password of Login Making Change:

        LOGIN BEING ADMINISTERED
                             Login's Name:xxxxxxx
                               Login Type:
                            Service Level:
Disable Following a Security Violation?
                   Access to INADS Port?

      LOGIN'S PASSWORD INFORMATION
                      Login's Password:
               Reenter Login's Password:
            Password Aging Cycle Length:

    LOGOFF NOTIFICATION
      Facility Test Call Notification? y     Acknowledgment Required? y
           Remote Access Notification? y     Acknowledgment Required? y
```

Screen 3-3. Login Administration

Changing a Login's Attributes

To change a customer login's attributes you must be a super-user, have administrative permissions (specifically, the `Administration Permission` field must be set to **y** for the super-user), and:

1. Type **change login [name]** and press Enter to access the Login Administration screen.
2. Enter your super-user password in the Password of Login Making Change field on the Login Administration screen. The 3- to 6-character login name entered with **change login [name]** appears in the Login's Name field.
3. Enter **customer** in the `Login Type` field.
4. Enter **super-user** or **non-super-user** in the `Service Level` field.

   NOTE:
   You cannot change your own service level.

5. To disable a login following a login security threshold violation, enter **y** in the `Disable Following a Security Violation` field.

   This field appears when SVN Login Violation Notification is **y**.

6. To allow access to the remote administration port, enter **y** in the `Access to INADS Port` field.

   This field appears when customer super-user access to the INADS Remote Administration port is enabled.

7. Enter a password for the new login in the `Login's Password` field. A password must be from 4 to 11 characters in length and contain at least 1 alphabetic and 1 numeric symbol. The system does not echo the password to the screen as you type.

8. Re-enter the password in the `Login's Password` field. The system does not echo the password to the screen as you type.

9. Enter the number of days (1 to 99) from the current day, when you wish the password to expire, in the `Password Aging Cycle Length` field. If a blank is entered in this field, password aging does not apply to the login.

Administering Login Command Permissions

Login permissions for a specified login can be set by the super-user to block any object that may compromise switch security. Up to 40 administration or maintenance objects commands can be blocked for a specified login in.

System commands are grouped into three command categories. Each of the three command categories has a group of command subcategories listed under them, and each command subcategory has a list of command objects that the commands acts on. A super-user can set a users permissions to restrict or block access to any command in these categories. The three categories are:

- Common Commands
  - Display Admin. and Maint. Data
  - System Measurements
- Administration Commands
  - Administer Stations
  - Administer Trunks
  - Additional Restrictions
  - Administer Features
  - Administer Permissions
- Maintenance Commands
  - Maintain Stations
  - Maintain Trunks
  - Maintain Systems
  - Maintain Switch Circuit Packs
  - Maintain Process Circuit Packs

See Command Permissions screen Entries — Display Administration and Maintenance for a list of command objects and actions. Use the information in the tables to help to establish command permissions for user logins.

To administer command permissions, log in as *super-user* and:

1. Access the Command Permissions Categories screen by entering **change permissions login [login name]**. When the screen appears, the default permissions for that “login type” are shown. The super-user administering the login can change a **y** to **n** for each subcategory field.
2. Select a category for the login and enter **y** in each field where permission to perform an administrative or maintenance action is needed. The command object you select must be within the permissions for the login type you are administering.

   If the Maintenance option is screen **y** on the Customer Options screen, the super-user can enter **y** in the `Maintain Switch Circuit Packs?` or `Maintain Process Circuit Packs` fields.
3. A super-user with full super-user permissions (super-user administering the login cannot have the `Additional Restrictions` field set to **y** for his/her own login) can restrict additional administrative or maintenance actions for a specified login by entering **y** in the `Additional Restrictions` field on the Command Permission Categories screen. Enter the additional restrictions for a login in the `Restricted Object List` fields on the Command Permission Categories Restricted Object List screen. You can enter up to 40 command names (object names) to block actions associated with a command category for a specified login.

```
                                                                    Page 1 of 3
                         COMMAND PERMISSION CATEGORIES
                           Login Name: Sup3ru
COMMON COMMANDS
               Display Admin. and Maint. Data? y
                           System Measurements? _
               System Mgmt Data Transfer Only? _

ADMINISTRATION COMMANDS
      Administer Stations? y             Administer Features? y
        Administer Trunks? y          Administer Permissions? y
  Additional Restrictions? n

MAINTENANCE COMMANDS
        Maintain Stations? n       Maintain Switch Circuit Packs? n
          Maintain Trunks? n      Maintain Process Circuit Packs? n
         Maintain Systems? n
```

Screen 3-4. Command Permission Categories (Page 1 of 3)

```
                                                                    Page 2 of 3

                        COMMAND PERMISSION CATEGORIES
                           RESTRICTED OBJECT LIST
          ________________________        ________________________
          ________________________        ________________________
          ________________________        ________________________
          ________________________        ________________________
          ________________________        ________________________
          ________________________        ________________________
          ________________________        ________________________
          ________________________        ________________________
          ________________________        ________________________
          ________________________        ________________________
```

Screen 3-5. Command Permissions Categories (Page 2 of 3)

```
                                                                    Page 3 of 3

                        COMMAND PERMISSION CATEGORIES
                           RESTRICTED OBJECT LIST
          ________________________        ________________________
          ________________________        ________________________
          ________________________        ________________________
          ________________________        ________________________
          ________________________        ________________________
          ________________________        ________________________
          ________________________        ________________________
          ________________________        ________________________
          ________________________        ________________________
          ________________________        ________________________
```

Screen 3-6. Command Permissions Categories (Page 3 of 3)

Table 3-1. Command Permissions screen Entries — Display Administration and Maintenance

Object	Action						
	Change	Display	List	Monitor	Remove	Status	Test
aar analysis		X	X				
aar digit-conversion		X	X				
aar route-chosen			X				
abbreviated-dialing 7103A-buttons		X					
abbreviated-dialing enhanced		X					
abbreviated-dialing group		X	X				
abbreviated-dialing personal		X	X				
abbreviated-dialing system		X					

Continued on next page

Table 3-1. Command Permissions screen Entries — Display Administration and Maintenance — *Continued*

Object	Action						
	Change	Display	List	Monitor	Remove	Status	Test
aca-parameters			X				
access-endpoint		X	X			X	X
adjunct-names		X					
adjunct-controlled-agents		X					
administered-connection		X	X			X	
agent-loginID		X	X				
alarms		X					X
alias-station		X					
alphanumeric-dial-table		X					
alternate-frl		X					
analog -testcall							X
announcements		X					
ars analysis		X	X				
ars analysis			X				
ars digit-conversion		X					
ars digit-conversion			X				
ars route-chosen			X				
ars-toll		X					
attendant		X	X				
bcms agent			X				
bcms loginIDs			X				
bcms split			X				
bcms trunk			X				
bcms vdn			X				
board							X
bri-port						X	
bridged-extensions			X				
bulletin-board		X					
button-location-aca		X					
cabinet		X	X				
call-forwarding			X				
call-screening		X					
capacity		X					
card-mem (MIPS Only)						X	X
cdr-link						X	X
circuit-packs		X					

Continued on next page

Table 3-1. Command Permissions screen Entries — Display Administration and Maintenance — *Continued*

Object	Action						
	Change	Display	List	Monitor	Remove	Status	Test
cleared-alarm-notif						X	
communication-interface hop-channels		X				X	
communication-interface links		X					
communication-interface proc-channels		X				X	
configuration all			X				
configuration board			X				
configuration carrier			X				
configuration control			X				
configuration network			X				
configuration software			X				
configuration station			X				
configuration trunk			X				
console-parameters		X					
cor		X	X				
cos		X					
coverage answer-group		X	X				
coverage groups		X					
coverage path		X	X				
customer-alarm							X
data-module		X	X			X	X
dialplan		X					
digit-absorption		X					
display-format		X	X				
do-not-disturb group			X				
do-not-disturb station			X				
ds1		X					X
dsp-msg-auto-wakeup		X					
dsp-msg-call-identifier		X					
dsp-msg-date-time		X					
dsp-msg-lwc		X					
dsp-msg-mct		X					
dsp-msg-miscellaneous		X					
dsp-msg-property-mgmt		X					
dsp-msg-softkey-label		X					
dsp-msg-tod-routing		X					
emergency			X				

Continued on next page

Table 3-1. Command Permissions screen Entries — Display Administration and Maintenance — *Continued*

Object	Action						
	Change	Display	List	Monitor	Remove	Status	Test
enp-number-plan		X					
environment							X
errors		X					
events		X					
external-device-alarm							
extension-type			X				
external-device-alarming							X
feature-access-code		X					
fiber-link (MIPS Only)		X	X				
groups-of-extensions			X				
hardware-group						X	X
health						X	
history			X				
hunt-group		X	X				
inads-link							X
integrated-annc-boards		X	X				
intercom-group		X	X				
interface (MIPS Only)						X	X
intra-switch-cdr		X	X				
isdn cpn-prefix		X					
isdn network-facilities		X					
isdn-testcall							X
isdn tsc-gateway		X					
ixc-codes		X					
journal-printer							X
led							X
link						X	X
listed-directory-numbers		X					
login						X	
login (MIPS Only)			X				
login-ids		X					
maintenance							X
marked-port			X				
mct-group-extensions		X					
mct-history			X				
meas-selection coverage		X					

Continued on next page

Table 3-1. Command Permissions screen Entries — Display Administration and Maintenance — *Continued*

Object	Action						
	Change	Display	List	Monitor	Remove	Status	Test
meas-selection principal		X					
meas-selection route-pattern		X					
meas-selection trunk-group		X					
meas-selection wideband-trunk-grp		X					
measurements security-violations detail			X				
measurements security-violations summary			X				
memory							X
MO							X
modem-pool		X	X				X
multi-frequency signaling		X					
network-control							X
node-routing		X	X				
packet-control (MIPS Only)						X	X
packet-interface (MIPS Only)						X	
paging code-calling-ids		X	X				
paging-loudspeaker		X					
password	X						
periodic-scheduled						X	
permissions		X					
personal-CO-line		X	X				
pgate		X	X				
pickup-group		X	X				
pkt							X
pms						X	
pms-down			X				
pms-link							X
pms-log						X	
pnc						X	
port		X					X
station		X	X				X
svn-button-location		X					
suspend-alm-orig			X				
synchronization		X				X	X
sys-link			X			X	
system				X			

Continued on next page

Table 3-1. Command Permissions screen Entries — Display Administration and Maintenance — *Continued*

Object	Action						
	Change	Display	List	Monitor	Remove	Status	Test
system 1st-cabinet						X	
system 2nd-cabinet						X	
system 3rd-cabinet						X	
system all-cabinets						X	
system conn				X			
system-parameters customer-options		X					
system-parameters features		X					
system-parameters maintenance		X					
system-parameters cdr		X					
system-parameters country-options		X					
system-parameters hospitality		X					
system-parameters security		X					
tdm							X
term-ext-group		X	X				
terminal-parameters 603/302B1		X					
terminal-parameters 8400		X					
test-schedule		X	X				
time		X					
time-of-day		X					
toll		X					
toll all			X				
toll restricted-call			X				
toll-list			X				
toll unrestricted-call			X				
tone-clock							X
trunk				X		X	X
trunk-group		X	X			X	
trunk-group-history			X				
trunk-group-members			X				
tsc-administered							X
tti						X	
udp		X	X				
unstaffed-agents			X				
usage button-type hunt-ns			X				
usage button-type trunk-ns			X				
usage button-type night-service			X				

Continued on next page

Table 3-1. Command Permissions screen Entries — Display Administration and Maintenance — *Continued*

Object	Action						
	Change	Display	List	Monitor	Remove	Status	Test
usage-extensions			X				
usage-hunt			X				
vdn		X	X	X			
vector		X	X				
wakeup incomplete			X				
wakeup requests			X				
wakeup station			X				
wakeup-log						X	

Table 3-2. Command Permissions screen Entries — Administer Permissions

Object	Action				
	Add	Change	Display	Enable	Remove
login	X	X	X	X	X
permissions		X			

Table 3-3. Command Permissions screen Entries — Administer Stations

Object	Action			
	Add	Change	Duplicate	Remove
abbreviated-dialing 7103A-buttons	X	X		X
abbreviated-dialing enhanced	X	X		X
abbreviated-dialing group	X	X		X
abbreviated-dialing personal		X		X
abbreviated-dialing system	X	X		X
alias-station		X		
attendant	X	X		X
console-parameters				
data-module	X	X	X	X
routing-table	X	X		X
station	X	X	X	X
terminal-parameters 603/302B1		X		
terminal-parameters 8400		X		
vdn	X	X		X
vector		X		

Table 3-4. Command Permissions screen Entries — Administer Trunks

Object	Action				
	Add	Change	Display	Duplicate	Remove
aar analysis		X			
aar digit-conversion		X			
access-endpoint	X	X		X	X
announcements		X			
ars analysis		X			
ars digit-conversion		X			
ars toll		X			
digit-absorption		X			
meas-selection route-pattern		X			
meas-selection trunk-group		X			
meas-selection wideband-trunk-grp		X			
modem-pool	X	X			X
personal-CO-line	X	X			X
pri-endpoint	X	X		X	X
remote-access		X	X		
rhnpa		X			
route-pattern		X			
time-of-day		X			
toll		X			
trunk-group	X	X			X

System Logoff Procedure

Perform the system logoff procedure any time the terminal is not being used. This assures that system translations are not accidentally corrupted. The **monitor system** command, when canceled, automatically causes a terminal user to be logged off and, thus, prevents unauthorized use of the terminal. Use the following procedure to log off the system:

1. Verify that `enter command` appears on the screen.
2. Enter **logoff** and press Enter.

   `login` appears on the screen.

NOTE:
If after either logging on as system technician or issuing a system technician command no additional command is issued for 30 minutes, an automatic time-out and logoff occurs. At that time, any alarms in the system previously unreported to INADS are reported. If you are logged in at two separate administration terminals, the system waits until the second terminal times out or until you log off before reporting such alarms to INADS.

Logoff Notification alerts system administrators if features that present a significant security risk are enabled. A message appears on the system administration/maintenance interface. Additionally, you can be required to acknowledge the notification before the logoff is completed.

A logoff screen appears if any of the following is true. If either a or b below is true and an acknowledgment is required, or if any of c, d, or e is true, you need to respond to the “Proceed with Logoff?” prompt on the logoff screen. See Screen 3-7 on page 3-22. The response is defaulted to “n”; you will need to enter “y” to override the default.

a. If Facility Test Call Notification has been enabled for your login. See Adding Customer Logins and Assigning Initial Passwords.
b. If Remote Access Notification has been enabled for your login. See Adding Customer Logins and Assigning Initial Passwords.
c. If Alarm Origination is disabled.
d. If any active major or minor alarm is active.
e. If any resource is busied out.

CAUTION:
To leave the Facility Test Call administered after you logoff poses a significant security risk.

CAUTION:
To leave the Remote Access feature administered after logging off poses a significant security risk if you are using the feature in conjunction with the Facility Test Call feature.

CAUTION:
No alarms report through the INADS interface if Alarm Origination is disabled.

CAUTION:
A busied out resource is one that is out of service. Be sure to verify if a busied resource needs to be released or if the resource should remain busied out.

```
 Facility Test Call Administered
Remote Access Administered
Alarm Origination is currently disabled.
Active major or minor alarm detected; be sure to resolve it.
*** Busied out resource detected; verify if release is needed! ****

Proceed With Logoff: [n]
```

Screen 3-7. Logoff Screen

Switch-Based Bulletin Board

Use Bulletin Board to leave messages in the system to communicate with other system users.

NOTE:
This feature is not intended as a substitute for the existing procedures for escalating problems, but only as an aid to the existing process.

Description

The bulletin board service provides an easy interface for the customer and Avaya to leave messages on the system.

The bulletin board feature makes it easy for the customer to communicate with Avaya (and vise-versa). For example, when a new load is installed on a switch in the customer's system, Avaya can leave the customer messages which describe new functionality. This feature also allows Avaya to keep the customer informed on the progress of trouble items. In addition, the feature can be used by the customer to provide additional information concerning problems that have already been escalated.

Accessing the Bulletin Board

Any user with the appropriate permissions can log into the system and have access to the bulletin board. User's who have "Maintain System" or "Administer Features" permissions can enter, change, display, print, or schedule to print a message. Users who have "Display Admin" and "Maintain Data" permission can display the bulletin board. Any user who has "Display" permission can display, print, and schedule to print the contents of the bulletin board.

When logging onto the system, users will be notified of any messages on the bulletin board. The notification message will indicate the last time the bulletin board was updated, if any "High-Priority" message exists, and if the bulletin board is 80% or more full. If a "High-Priority" message exists, the command prompt will change to the following message:

- `High-Priority Bulletin Board Messages Entered:`

After the next command is entered, the command prompt appears.

User Considerations

- Only one user at a time may edit a message on the bulletin board.
- The user must have the proper permissions to access the bulletin board.
- The user must maintain the information stored on the bulletin board. It is the user's responsibility to delete old messages. If the bulletin board is full, any new messages overwrite old messages.

System Considerations

The Bulletin Board feature provides up to 3 pages of text for each message. Each page is limited to 20 lines of text, and each line of text is limited to 40 characters per line. The first 10 lines of text on page 1 is reserved for Avaya Service's High-Priority messages.

System Bulletin Board Commands

The commands **change bulletin board**, **display bulletin board**, and existing commands in the user interface are provided in the Switch-Based Bulletin Board.

Editing a Bulletin Board Message

1. Log into the system with "Maintain System" or "Administer Features" permissions.
2. Type **change bulletin-board** and press Enter.
3. Follow system prompts.

To display messages on the Switch Based Bulletin Board:

1. Log into the system with “Maintain System”, “Display Admin”, or “Maint Data” permissions.
2. Type **display bulletin board** and press Enter.
3. Follow system prompts.

Editing a Switch-Based Bulletin Board Message

A message may contain up to three pages of information. Message lines 1 through 10 on page 1 are reserved for Avaya Services *High-Priority* messages (the “init” and “inads” logins can edit the first 10 lines on page 1). Pages 2 and 3 allow up to 20 lines of text, with up to 40 characters per line. Each line of text has a date field that is populated by the system when the line is modified.

The control keys used to edit existing feature forms also edit a message in the Switch Based Bulletin Board. Use the following characters in the text field:

- Uppercase/Lowercase letters, spaces, numerals, and!@#$%^&*()_ -+=[]{};’”<>./?.

Tab characters are not allowed.

If a user changes any lines that cause two or more consecutive blank lines, the bulletin board is automatically reorganized upon submittal. Two or more blank lines are consolidated into a single blank line. If a blank line is at the top of a screen, it will be deleted. This function helps prevent holes in the bulletin board screens as old entries are deleted.

Use **save translation** to save a message entered into the bulletin board text field.

The following screen is an example of bulletin board messages between Avaya and a customer who is having trouble with trunk group translations.

```
display bulletin-board                                        Page 1 of 3
          Messages (* indicates high-priority)       Date

       * Avaya is in the process of                 02/02/95
       * investigating your trunk lockup problem.    02/02/95
       * The Bulletin Board will be updated as       02/02/95
       * information is found.                       02/02/95
       * We have identified the problem.             02/02/95
       * The trunk you added does not provide        02/02/95
       * disconnect supervision, however your trunk  02/02/95
       * group was administered as such.             02/02/95
       * Please call for details.                    02/02/95
       *
        We recently added a new trunk group (14)     02/03/95
        and have had trunk group members locking up. 02/03/95
        We see the error - Thanks for checking.      02/03/95
```

DEC VT220 Terminal

The system supports use of the DEC VT220 connected to the system and used in the same way as the other terminals. When logging in, at the terminal-type prompt, enter”VT220” to initialize the correct parameters. Keyboard definitions are shown in Table 3-5:

Table 3-5. Keyboard Definitions for the DEC VT220 Terminal

Function	VT220 Key	Escape Sequence
Help	Help	ESC[28~
Previous Page	Previous Screen	ESC[5~
Next Page	Next Screen	ESC[6~
Cancel	Remove	ESC[3~
Execute	Do	ESC[29~
Previous Field	F17	ESC[31~
Next Field	F18	ESC[32~
Clear Field	F19	ESC[33~
Refresh	F20	ESC[34~
Next Form	Select	ESC[4~
Up Arrow	Up_Arrow	ESC[A
Down Arrow	Down_Arrow	ESC[B
Right Arrow	Right_Arrow	ESC[C
Left Arrow	Left_Arrow	ESC[D
Update Form	Find	ESC[1~

Initialization and Recovery

4

When the system is initially powered up, or when it experiences a catastrophic fault that interrupts its basic functions, the system either initializes or reboots.

Reset commands

Besides “reboot,” there are several less severe resets available to the system that allow it to recover from disrupting errors. The user can initiate these resets by using the reset system commands. These commands are used to manually restart the system at various levels, depending on the required test activity. The reset system commands are discussed in Chapter 8, ‘‘Maintenance Commands and Trouble-Clearing Aids’’.

A system is reset due to a loss of power, or via one of the following:

- reset commands at the administration terminal
- Maintenance software, from which the system can reset itself (this process starts when certain software and hardware errors are detected by the software.)
- “interchange,” a type of reset that can be scheduled as part of daily maintenance in High or Critical Reliability systems

WARNING:
When the system is rebooted or reset at level 2, 3, 4, or 5, all voice terminal and attendant console features are adversely affected. Users should be advised of services that are lost and that, as a result, must be reactivated. See “Removing Power” in Chapter 5, ‘‘Routine Maintenance Procedures’’.

The administration terminal display and circuit pack LEDs indicate the progress of the recovery process. LEDs are discussed in Chapter 7, ‘‘LED Interpretation’’.

The sections that follow discuss successful system resets. For each level of reset, a typical administration terminal display is provided. Note that any hexadecimal numbers shown in parentheses, such as”(=8B89),” are only examples and are subject to change. Subsequent sections discuss the recovery process following an SPE-Down Mode and for “duplication interface-processing element communication down.”

NOTE:
If any of the diagnostic tests fail, the system may or may not function properly, and the LMM may or may not proceed with the restart. If the LMM does not proceed with the restart, the system goes into SPE-Down Mode. In failure cases, the appropriate part (for example, the Processor circuit pack) should be replaced. You need to obtain a new license file any time you replace the processor circuit pack.

NOTE:
Use and check the results of the **set/get vector** command found in the “Set Commands” section in Chapter 8, ‘‘Maintenance Commands and Trouble-Clearing Aids’’, to determine how much time should be added for the recovery levels. Also, if an update file is applied on a system reset, add from 30 seconds to one minute to the recovery time for that reset.

Reset System 1 (System Warm Start)

This recovery takes about 30 seconds. All stable phone calls remain up. In-progress calls are dropped. No new calls can be made during this time.

In this restart, all software (Oryx/Pecos, drivers, maintenance, and so forth) is reset.

Typical Display

```
RESET 1 (WARM) PERFORMED
```

Reset System 2 (System Cold Start Without Translations Loading)

All Port circuit packs are reset. All telephone sessions are dropped. Telephones begin to reconnect to the switch within 30 seconds. In a large system, reconnection of all telephones may take up to five minutes.

In this restart, all software (Oryx/Pecos, drivers, maintenance, and so forth) is reset. In addition, the TDM Bus and all port circuit packs are reset.

Typical display

```
INTERNAL REGISTER TEST      PASSED
LOCAL BUS TEST              PASSED
ROM CHECKSUM TEST           PASSED
CONTROL STATUS TEST         PASSED
DCACHE TEST                 PASSED
ICACHE TEST                 PASSED
WRITE BUFFER TEST           PASSED
BTO TEST                    PASSED
TIMER TEST                  PASSED
RESET 2 (COLD_2) PERFORMED
```

Reset System 3 (System Cold Start With Translations Loading)

Emergency Transfer is invoked. Translations reload from translation card. Depending on the translations, the reloading process could take from five to 30 seconds. Thereafter, all port circuit packs are reset, and all telephone sessions drop. Telephones begin to reconnect to the switch within 30 seconds. In a large system, reconnection of all telephones may take up to five minutes.

In this restart, all software (Oryx/Pecos, drivers, maintenance, and so forth) is reset. After the software is reset, all translations load from translation card. In addition, the TDM Bus and all port circuit packs are reset.

Typical display (TN2404/TN790)

```
INTERNAL REGISTER TEST      PASSED
LOCAL BUS TEST              PASSED
ROM CHECKSUM TEST           PASSED
CONTROL STATUS TEST         PASSED
DCACHE TEST                 PASSED
ICACHE TEST                 PASSED
WRITE BUFFER TEST           PASSED
BTO TEST                    PASSED
TIMER TEST                  PASSED
RESET 3 (COLD_1) PERFORMED
```

Reset System 4 (System Reboot)

Emergency Transfer is invoked. The boot image is already in the flash ROM memory. The system reboots immediately after the LMM performs a series of diagnostics on the processor and memory. Translations reload from the translation card. Depending on the translation, the reloading process takes from five to 30 seconds.

Thereafter, all port circuit packs are reset, and all telephone sessions drop. Telephones begin to reconnect to the switch within 30 seconds. In a large system, reconnection of all telephones may take up to five minutes.

Typical display (TN2404/TN790B)

```
INTERNAL REGISTER TEST          PASSED
LOCAL BUS TEST                  PASSED
ROM CHECKSUM TEST               PASSED
CONTROL STATUS TEST             PASSED
DCACHE TEST                     PASSED
ICACHE TEST                     PASSED
WRITE BUFFER TEST               PASSED
BTO TEST                        PASSED
MEM CONFIG TEST                 PASSED
```

Continued on next page

```
MEMORY FUNCTIONAL TEST          PASSED
MEMORY MODULE A STUCK BIT TEST  PASSED
MEMORY MODULE A PARITY TEST     PASSED
MEMORY MODULE A BURST TEST      PASSED
MEMORY MODULE B STUCK BIT TEST  PASSED
MEMORY MODULE B PARITY TEST     PASSED
MEMORY MODULE B BURST TEST      PASSED
MEMORY MODULE C STUCK BIT TEST  PASSED
MEMORY MODULE C PARITY TEST     PASSED
MEMORY MODULE C BURST TEST      PASSED
VIRTUAL MEMORY TEST             PASSED
EXECEPTION TEST                 PASSED
TIMER TEST                      PASSED
MTP TEST                        PASSED
SANITY TIMER TEST               PASSED
ADDRESS MATCHER TEST            PASSED
FLASH TEXT CHECKSUM TEST        PASSED
DECOMPRESSING IDATA             in_cnt = 455532,
                                out_cnt = 1802240
RAM DATA CHECKSUM TEST          PASSED
RESET 4 (EXT REBOOT) PEFORMED
```

Reset System 5 (System Reboot and Run All 24-Hour Tests)

Emergency Transfer is invoked. The LMM performs a series of diagnostics on the processor, on memory, and on memory card. Some diagnostics perform twice. This takes less than three minutes.

The boot image is already in the flash ROM memory. The system reboots immediately after the LMM performs a series of diagnostics on the processor and memory. Translations reload from the translation card. Depending on the translation, the reloading process takes from five to 30 seconds. Thereafter, all port circuit packs are reset, and all telephone sessions drop. Telephones begin to reconnect to the switch within 30 seconds. In a large system, reconnection of all telephones may take up to five minutes. Scheduled maintenance is initiated.

Typical display (TN2404/TN790)

```
INTERNAL REGISTER TEST          PASSED
LOCAL BUS TEST                  PASSED
ROM CHECKSUM TEST               PASSED
CONTROL STATUS TEST             PASSED
DCACHE TEST                     PASSED
ICACHE TEST                     PASSED
WRITE BUFFER TEST               PASSED
BTO TEST                        PASSED
MEM CONFIG TEST                 PASSED
MEMORY FUNCTIONAL TEST          PASSED
MEMORY MODULE A STUCK BIT TEST  PASSED
MEMORY MODULE A PARITY TEST     PASSED
MEMORY MODULE A BURST TEST      PASSED
MEMORY MODULE A COUPLE TEST     PASSED
MEMORY MODULE B STUCK BIT TEST  PASSED
MEMORY MODULE B PARITY TEST     PASSED
MEMORY MODULE B BURST TEST      PASSED
MEMORY MODULE B COUPLE TEST     PASSED
MEMORY MODULE C STUCK BIT TEST  PASSED
MEMORY MODULE C PARITY TEST     PASSED
MEMORY MODULE C BURST TEST      PASSED
MEMORY MODULE C COUPLE TEST     PASSED
VIRTUAL MEMORY TEST             PASSED
EXECEPTION TEST                 PASSED
TIMER TEST                      PASSED
MTP TEST                        PASSED
SANITY TIMER TEST               PASSED
ADDRESS MATCHER TEST            PASSED
FLASH TEXT CHECKSUM TEST        PASSED
```

Continued on next page

```
DECOMPRESSING IDATA              in_cnt = 455532,
                                 out_cnt = 1802240

RAM DATA CHECKSUM TEST           PASSED

RESET 5 (EXT REBOOT) PEFORMED
```

Reset System Interchange (High or Critical Reliability Systems Only)

SPE-interchange (system hot start) is denoted by an “i” in the initcauses log. This restart is used to transfer control from the Active SPE to the Standby SPE in the least disruptive manner. Interchange (i) is the most transparent of all levels of restart and causes no disruption of service to telephone users. This restart takes fewer than two seconds.

NOTE:
The administration terminal is logged off. No diagnostics are performed, and only the login prompt displays.

An interchange (i) can be performed in one of the following three ways:

a. System Technician-Demanded: use the **reset system interchange** command

b. Scheduled Maintenance

c. Software-Requested: The software requests the interchange when it determines that the Standby SPE is healthier than the current Active SPE

NOTE:
For most SPE alarms, interchange to the standby SPE is achieved using the hot restart (i). However, there may be other alarms for which another restart level (1 through 4) must be used to achieve a transition to the Standby SPE. See Table 6-2, “Software-Requested Interchanges Caused by Alarm Conditions” in Chapter 6, ‘‘Reliability Systems: A Maintenance Aid’’, for a complete list of alarms and restart levels.

Procedure for SPE-Down Mode

Due to fatal hardware and software problems, it is possible for a system to go into SPE-Down Mode. In this mode, the system invokes emergency transfer and does not provide any other service. Moreover, while in this mode, the software does not (or cannot) run at all. In a high or critical reliability system the system goes into SPE-Down mode **only when both SPEs go into SPE-Down mode**.

There is an interface to the system by maintenance. The Processor circuit pack, is responsible for maintenance in a standard reliability system. In a high or critical reliability system, the maintenance is provided by the A-carrier Duplication Interface (DUPINT-A) TN772 circuit pack with help from the processor.

The administration terminal, which connects directly to the processor in a standard reliability system and to DUPINT-A in a high or critical reliability system, provides a very limited interface to the system. Technicians can display alarms or restart the system. Only a subset of control complex alarms displays.

The following are sample displays for SPE-Down mode and the alarms displayed.

Display for SPE-Down in a Standard Reliability system:

**********SPE DOWN MODE**********
You can display alarms and reset system(4).
SPE_DOWN->

Screen 4-1 and Screen 4-2 on page 4-9 show all possible SPE-Down alarms in a standard reliability system and in a high or critical reliability system, respectively.

```
DISPLAY ALARMS:

     Physical    Logical    On        Alternate   Alarm       Date        Date
     Name        Name       Board?    Name        Type        Alarmed     Resolved

     ------      PROC_BD    y         -----       MAJOR       ------      ------
     ------      MEM_BD_0   y         -----       MAJOR       ------      ------
     ------      M_BUS      y         -----       MAJOR       ------      ------
     ------      MAINT*     y         -----       MAJOR       ------      ------
     ------      NETCON_BD  y         -----       MAJOR       ------      ------
     ------      TAPE_UNIT  ------    -----       MAJOR       ------      ------
     ------      NO_TAPE    ------    -----       MAJOR       ------      ------
```

Screen 4-1. Display Alarms Command

* The “MAINT” designation is used for PR-MAINT.

Display for SPE-Down in a High or Critical Reliability System:

**********SPE DOWN MODE**********
You can display alarms [a|b] and reset system(4) [a|b].
SPE_DOWN->

Screen 4-2 shows only one SPE-Down alarm in a high or critical reliability system after entering the **display b** command:

```
DISPLAY ALARMS B:

    Physical    Logical    On       Alternate    Alarm       Date        Date
    Name        Name       Board?   Name         Type        Alarmed     Resolved

      ------     PROC_BD    y            -----     MAJOR       ------       ------
```

Screen 4-2. Display Alarms (one SPE-Down)

NOTE:
A standard reliability system tries to restart itself every 20 minutes. A high or critical system tries to restart itself every 10 minutes.

The first step is to determine the location of the problem. It is possible for two or more circuit packs to have failed. It is also possible for a fatal problem with one circuit pack to affect another circuit pack. This is especially true for the Processor and Memory circuit packs, where a failure in one affects the other. All three of the following methods should be employed to determine where the fatal fault lies.

1. Use **display alarms** command.

   Issuing the **display alarms [a | b]** command at the administration terminal shows where maintenance thinks the problem lies. The alarms are a good indication of why the system went down. They should be used with the following two methods.

2. Observe red LEDs.

   Observe the red LEDs on the circuit pack to determine where software or processor firmware (LMM) had a problem.

3. Use the **reset** command.

   In 286 system, issuing the **reset** command (Standard Reliability system) or the **reset [a | b]** command (High or Critical Reliability system) causes the system to attempt a **reset system 4**. Observe all the diagnostics on the screen, and note if the LMM has a problem with any of the diagnostics, as this information should give a good indication of where the problem lies.

The procedure to get a system out of SPE-Down mode follows.

NOTE:
This is important! If you cannot complete the first step or have problems with the maintenance interface, then replace the Processor circuit pack. In a high or critical reliability system the DUPINT-A circuit pack can also cause SPE-Down. Remember that you need to obtain a new license file any time you replace the processor circuit pack.

1. If the alarms indicate a tape failure, replace the tape or tape drive and go to Step 3. Otherwise, verify that there is a good tape in the tape drive. If a tape is not present or if either the tape or tape drive is defective, then restarting the system using the **reset** command causes the system to go down again.
2. In a High or Critical Reliability system, select a carrier to repair first.

   When it is possible to accurately determine the location of the problem, use the **display alarms [a | b]** command to display alarms for both SPEs and check the red LEDs on the processor complex circuit packs. Select the carrier where the red LEDs indicate the circuit pack alarmed. Bring up the system on that carrier and then refer to Standby SPE Maintenance documentation to repair the Standby SPE.

   In a Standard Reliability system or after a carrier is chosen in a High or Critical Reliability system, determine which circuit pack is defective by displaying alarms and observing the red LEDs (as discussed previously). Depending on the alarms, use Table 4-1 on page 4-11 to replace the circuit packs indicated, one by one, in the order shown.

Table 4-1. Order of Circuit Pack Replacement

Alarm	Suggested Circuit Packs To Replace
PROC_BD	1) Processor 2) Network Control
MEM_BUS	1) Processor 2) Network Control
PROC_MEM	1) Processor
OFFBD_MEM	1) Processor 2) Network Control
INVALID_ERR	1) Processor 2) Network Control
MAINT_BD	1) Processor 2) Network Control
NETCON_ABSENT	1) Network Control 2) Processor
NO_CARTRIDGE	1) Memory Card 2) Network Control 3) Processor

Procedure for Duplication Interface — Processing Element Communication Down

In a High or Critical Reliability system, it is possible for both SPEs to stop communicating with the A-carrier TN772 Duplication Interface (DUPINT-A) circuit pack. Thus, the DUPINT-A, which is in charge of maintenance, prints the following message on the administration terminal:

```
Duplication Interface-Processing Element Communication down
```

The system may continue to function on one of the SPEs. However, the system is not able to provide any interface to the administration terminal.

If the system is still providing service, connect the administration terminal to the Active SPE (check the amber LED on the Processor circuit pack). Then, if software provides a login on the administration terminal, you can determine the problems via the **display alarms** command.

If the system is not providing service, there is a problem with the Processor circuit packs and/or DUPINT-A. Replace these circuit packs, one by one, until the system starts functioning normally.

Routine Maintenance Procedures

5

The following general purpose maintenance procedures may be used with other repair strategies to clear system-alarmed and user-reported troubles.

Suppress Alarm Origination [y]

When logged in as “craft”, no alarms are reported to INADS. After logging off, INADS automatically reactivates, and any unresolved alarms are reported to INADS.

Also, when logged in as “craft,” an automatic logoff of the terminal occurs after 30 minutes of non-use. At that time, any unresolved alarms are reported to INADS. If you are logged in as “craft” at 2 different terminals, the logoff occurs when the second terminal remains unused for 30 minutes.

NOTE:
The **test inads-link** command functions even if INADS Alarm Origination is overridden.

Handling Control Circuit Packs

PPN Control Circuit Packs

WARNING:
It is NOT recommended that you reseat circuit packs unless the documentation specifically instructs you to do so. If it is required to reseat a circuit pack, follow the instructions below which explain how to unseat, reseat, and replace circuit packs.

The procedures for unseating, reseating, and replacing control circuit packs vary depending on the system configuration. Therefore, before performing these maintenance activities, refer to the appropriate procedure below.

Procedure for a Standard Reliability Cabinet

To unseat a control circuit pack:

1. Remove power from the PPN. See "Removing Power".
2. Slide the latch pin upward to unlock the locking lever.
3. Pull down on the locking lever until the circuit pack disconnects from its socket.
4. Pull the circuit pack just enough to break contact with the backplane connector, but do not remove it from the cabinet.

To reseat a circuit pack:

1. Push the unseated circuit pack back into the backplane connector.
2. Lift the locking lever until the pin engages.
3. Restore power to the PPN. See "Restoring Power".

To replace Control circuit packs:

1. Remove power from the PPN. See "Removing Power".
1. Unseat the circuit pack.
2. Slide the circuit pack out of the slot.
3. Replace the circuit pack as per the following procedure:

NOTE:
If a new circuit pack does not correct the problem,re-install the original circuit pack.

NOTE:
If you are replacing a TN2404/TN790 circuit pack, refer to "TN2404/TN790 processor circuit pack". You must obtain a new license file each time you replace a processor circuit pack.

To install a new circuit pack or return the original one to service:

1. Carefully insert the circuit pack and push it all the way into its mounting slot.
2. Lift the locking lever until the latch pin engages.
3. Restore power to the PPN. See ''Restoring Power''.
4. Verify that the circuit pack LED indications are correct.
5. Test the replaced control circuit pack by issuing the system technician commands after power has been restored.

Network Control Circuit Pack

WARNING:
When a TN777B Network Control circuit pack is reseated or replaced, the correct date and time setting must be manually entered and verified.

The TN777B Network Control Pack holds a translation card. Before this circuit pack is handled, remove the translation card.

1. Check that the "card in use" LED is not lighted. Otherwise, removing the memory card may damage the data recorded on it.
2. Carefully pull the translation card from the card slot.

To insert the card into the slot:

1. Take the translation card and hold it in front of you so that the card's label is facing to your left.
2. With the card in this position, insert the shorter edge of the card into the mounting slot. Then, gently push the card forward until you feel some resistance at the opposite edge of the card. Once you feel this resistance, the card is inserted. About 3/4 of an inch of a fully inserted card should appear outside of the card slot.

   WARNING:
   Remember, assuming you are directly facing the circuit pack, the card label should be facing to your left. If this is not the case, remove the card and start again.

3. Use **test card-mem** (system technician command) to test the card.

EPN Control Circuit Packs

Control circuit packs are unseated, reseated, replaced, and tested in the same way as Port circuit packs. See "Handling Control Circuit Packs" in this chapter. Note the special precautions required when handling the TN776 and TN570 Expansion Interface (EXP-INTF) circuit packs and the EPN TN768 and TN780 Tone-Clock circuit packs.

EPN Expansion Interface Circuit Packs

If the system has high or critical reliability, verify that the Expansion Interface to be unseated or replaced is not a part of the Active Expansion Interface Link. Use the **status system** command. If the Expansion Interface circuit pack is shown to be a part of the Active Expansion Interface Link, use the **set expansion-link PCSS** command to make the current Standby link the Active one.

EPN Tone-Clock Circuit Packs

If the EPN has redundant Tone-Clock circuit packs, make sure the Tone-Clock to be unseated or replaced is the Standby circuit pack. Use the **status system** command. If the Tone-Clock is shown as Active, use the **set tone-clock PC** command to make the current Standby Tone-Clock the Active one.

TN2404/TN790 processor circuit pack

Processor Circuit Pack (Memory)

Unless you are upgrading memory, the TN2404/TN790 must have the same number of SIMMs as the replaced circuit pack. You must obtain a license file each time you replace a processor circuit pack.

CAUTION:
Be sure to use an Avaya-provided SIMM. Other brands may have incompatible edge connectors and could produce unpredictable results.

Removing Power

When power is removed, the following features deactivate:

- Attendant Trunk Group Control
- Automatic Callback
- Call Park
- Make Busy for Direct Department Calling (DDC) and Uniform Call Distribution (UCD)

WARNING:
Before powering down a cabinet or carrier that contains EMBEDDED AUDIX circuit packs (TN566), first power down the AUDIX unit to avoid damaging the AUDIX software. Instructions for powering down this unit are in the "EMBEDDED AUDIX System Power Procedures", on the circuit pack, and in EMBEDDED AUDIX documentation.

EMBEDDED AUDIX System Power Procedures

Manually Power Down AUDIX System

A yellow caution sticker on the system's power unit notifies technicians to shut down the EMBEDDED AUDIX System prior to powering down the system.

1. Press the Boot/shutdown button with a pointed object, such as a paper clip or pen (do not use a pencil). The button is located near the top right of the front panel.
2. Press the boot/Shutdown button until the LCD display flashes the message `MSHUT`.
3. Release the Boot/Shutdown button.

NOTE:
The EMBEDDED AUDIX System takes about five minutes to shut down. The "heartbeat" indication on the display continues to flash.

Removing Power in a Single-Carrier Cabinet PPN

Follow these steps to remove power to an AC- or DC-powered single-carrier cabinet PPN with high or critical reliability.

WARNING:
If a translation card alarm is present, or if a translation card problem is suspected, do not save translations of the translation card that is provided with the system.

CAUTION:
Check that the translation card is present in the system or check that the translation card is in the TN777B Network Control circuit pack.

1. At the administration terminal, type **save translation** and press Enter.
2. In a standard reliability system on the processor circuit pack in the PPN, and on the maintenance circuit pack in the EPN, set the Emergency Transfer switch to “ON.”

   CAUTION:
   *When removing power, Error Log information is lost. If you want to retain the data, type **reset system 4**. This restarts the system and may take several minutes. Wait for the login prompt before proceeding.*

3. Turn off the power in each cabinet individually. The ON/OFF power switch is located behind the power unit:
   - WP-91153 Power Unit for an AC-powered system.
   - 676B Power Unit for a DC-powered system

Removing Power in a Single-Carrier Cabinet EPN

NOTE:
Power may be removed from the EPN without affecting the PPN.

Follow these steps to remove power to an AC- or DC-powered single-carrier EPN with or without high or critical reliability.

Before you start

In a high or critical reliability system, if power is to be removed from an individual cabinet only, verify that the affected cabinet does not contain an Expansion Interface circuit pack that is part of the Active Expansion Link or an Active Tone-Clock.

1. Use **status system** to determine which Expansion Interface Link and Tone-Clock are active.
2. Use **display synchronization** to determine the synchronization reference.

To remove power from the cabinet:

1. Turn off the power in each cabinet individually. The ON/OFF power switch is located behind the power unit:
   - WP-91153 Power Unit for an AC-powered system.
   - 676B Power Unit for a DC-powered system

Restoring Power

NOTE:
If the AUDIX unit has been powered down, refer to ''Power Up the AUDIX System'' on page 5-9.

Restore Power to a Single Carrier Cabinet PPN

Follow these steps to restore power to AC- or DC-powered single-carrier cabinet PPNs with or without high or critical reliability.

Before you start

In a high or critical reliability system, if power is to be removed from an individual cabinet only, verify that the cabinet does not contain an Expansion Interface circuit pack that is part of the Active Expansion Link or an Active Tone-Clock.

1. Use **status system** to determine which Expansion Interface Link and Tone-Clock are active.
2. Use **display synchronization** to determine the synchronization reference.

To restore power to the cabinet:

1. Turn on the power in each cabinet individually. The power ON/OFF switch is located behind the power unit:
   - WP-91153 Power Unit for an AC-powered system.
   - 676B Power Unit for a DC-powered system

     If the cabinet is powered by a 676B Power Unit, the 676B must have been powered off for at least 10 seconds before being powered on. If not, the 676B Power Unit does not restart.
2. Ensure that the translation card is properly inserted into the slot.

   The system reboots. The translations are loaded from the translation card, and rebooting takes about three minutes.
3. When system power is restored, a message appears on the administration terminal.

   The display is the same as a **reset system 4,** described in ''Reset System 4 (System Reboot)'' in Chapter 4, ''Initialization and Recovery''.
4. After the system reboot is finished and all trouble is cleared, return the EMER XFER (Emergency Transfer) switch(es) to AUTO.

   This restores the system to the normal operating mode.
5. Use **set time** to reset the time.
6. Use **display time** command to verify your changes.

Restore Power to a Single-Carrier Cabinet EPN

NOTE:
Power may be restored to the EPN without affecting the PPN.

Follow these steps to restore power to AC- or DC-powered single-carrier cabinet EPNs with or without high or critical reliability.

Before you start

In a high or critical reliability system, if power is to be removed from an individual cabinet only, verify that the affected cabinet does not contain an Expansion Interface circuit pack that is part of the Active Expansion Link or an Active Tone-Clock. T

- Use **status system** to determine which Expansion Interface Link and Tone-Clock are active.
- Use **display synchronization** to determine the synchronization reference.

1. To restore power to the cabinet:
   - In an AC-Powered single-carrier cabinet system, turn on the power in each cabinet individually. The ON/OFF switch is located at the back of the cabinet behind the WP-91153 Power Unit.
   - In a DC-Powered single-carrier cabinet system, turn on the power in each cabinet individually. The ON/OFF switch is located at the back of the cabinet behind the 676B Power Unit.

     If the cabinet is powered by a 676B Power Unit, the 676B must have been powered off for at least 10 seconds before being powered on. If not, the 676B Power Unit does not restart.
2. The EPN circuit packs is inserted and the EPN is available for call processing.
3. After the system reboot is finished and all trouble is cleared, return the Emergency Transfer switch to AUTO. This restores the system to the normal operating mode.

Power Up the AUDIX System

1. Using a pointed object such as a paper clip or a pen (do not use a pencil), press the Boot/Shutdown button.
2. Hold the boot/Shutdown button in until the display indicates the message, `BTEST`, steady on.
3. Release the Boot/Shutdown button.

   The EMBEDDED AUDIX system takes approximately 5 minutes to power up.
   - The display has the following sequence of steady on messages:
     - OSINIT
     - OS
     - AINIT
     - ADX
   - The EMBEDDED AUDIX System is now powered up. When the system is in the active state, the display indicates `ADX`, and the red LED is off.

NOTE:
When powering up, the EMBEDDED AUDIX System automatically reboots. This sequence may show an `MD` or `MJ ADX` alarm in the display until the system how powered up. When the system has completed its power up sequence, `ADX` appears.

Troubleshooting power units

Use the following procedures to troubleshoot the power unit:

1. Check that the translation card is in its slot.
2. Type **save translation** and press Enter to save translations.
3. Set the EMER XFER (Emergency Transfer) switch on the Processor circuit pack in the PPN to ON. This locks the system in the Transfer Mode until the trouble is cleared.

   WARNING:
   Electrostatic discharge can destroy or severely damage integrated circuits or circuit packs. Always wear the electrostatic discharge (ESD) wrist grounding strap when handling circuit packs. Connect the wrist strap to one of the metal tabs located on the lower left or right side of one of the carriers.

4. Unlatch both locking levers and unseat the power unit.

   NOTE:
   If the 1217A yellow power supply LED is not lit, the unit has likely faulted due to overload conditions. However, the power supply continues to provide other output voltages (±5V DC and -48 V DC) to circuit packs and does not completely shut down as earlier power supplies do if the +12V fan or the +12V DC tape drive outputs are overloaded.

5. Unseat all the *control* circuit packs.

   CAUTION:
   Ensure that the customer administrator is aware that service is interrupted during this step.

6. Reseat the power unit. If the yellow LED on the suspect power supply lights immediately, the *control* circuit packs can be presumed to be healthy.
7. If the yellow LED on the suspect power supply does *not* light immediately, reseat the *control* circuit packs one at a time while observing the LED on the power supply.
   a. If the yellow LED on the power supply lights when a specific circuit pack is reseated, unseat and reseat the same circuit pack again to rule out a transient problem.
   b. If the yellow LED lights again, the problem is with the circuit pack, and the power supply is functioning properly. Replace the defective circuit pack (see "Replacing power supplies and fans").

8. If the yellow LED on the power supply does *not* light during the reseating of the *control* circuit packs, unseat all *port* circuit packs.
9. Reseat the *port* circuit packs one at a time, as you did in Step 7 above.
10. Check for power to the tape drive unit and fans. These devices use separate outputs from the power supply.
11. If none of the control or port circuit packs appears to be defective, check the cabinet temperature.

    NOTE:
    The 1217A power supply's thermal protection shuts it down if the incoming air temperature is greater than 50° C. (122° F.) at 10,000 ft. (3,049 m.) elevation or 60° C. (140° F.) at sea level.

12. If both the circuit packs and the ambient cabinet temperature can be eliminated as potential trouble causes, replace the power unit (see "Replacing power supplies and fans").
13. Reboot the system.
14. When the system reboot has completed, return the EMER XFER (Emergency Transfer) switch to AUTO (restores the system to the normal operating mode).

Replacing power supplies and fans

General caution

Components can be replaced while the unit is attached to the wall. Also, if the wires and cables at the back of the cabinet are neatly bundled, these wires and cables need not be disconnected.

CAUTION:
When replacing either the power supply or the fans unit that is already attached to the wall, you should disconnect the entire fan panel from the unit. Otherwise, if the fan panel is left to dangle, the cable assemblies leading from the fans (connected to the fan panel) and into the backplane might become damaged or disconnected from the backplane.

Replacing the 1217A power supply

Use the following procedures below to replace the 1217A power supply, which can replace any of these power units:

- WP91153 L3
- WP91153 L3A
- WP91153 L4-25
- WP91153 L4A-25

1. Power down AUDIX and any other circuit pack that might be running an application (for example, MAPD, TN802 may be running the Internet trunking application on Windows NT™).
2. Power down the cabinet.
3. Make sure you are wearing a ground strap.
4. Release both latches on the power supply and slide the unit out of the cabinet.
5. Before replacing the new power supply, ensure that the ring generator slide switch on the bottom of the unit is set to the appropriate frequency (Table 5-1):

Table 5-1. 1217A power supply ring outputs

Frequency	Application	Output voltage	Current
20 Hz. (position as shipped from vendor)	North America International	85V AC	0 - 180 mA
25 Hz.	International	72V AC	0 - 180 mA

6. Slide the unit into the slot and ensure that both latches snap closed.
7. Power up the cabinet.
8. Observe that the yellow LED is lit continuously.
9. If the yellow LED flashes, this indicates a power fault. See "Troubleshooting power units".

Replacing a 631AR or 631BR AC power unit

To replace either power unit use the following procedures and Figure 5-1.

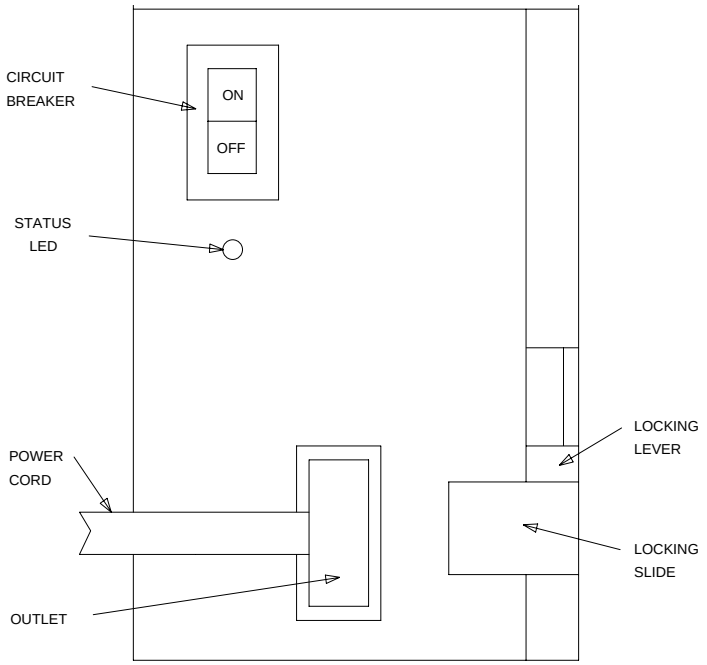

Figure 5-1. 631AR or 631BR AC Power Unit

1. Set the power switch to OFF, and unplug the power cord.
2. Move the locking slide on the power unit all the way to the left and unlatch the locking lever.
3. Remove the power unit from the carrier.

4. Before installing the replacement power unit in the carrier, turn the power unit on its side and operate rocker switches 1 through 4 on the DIP switch as follows:

Switch	631AR Position	631BR Position
1	open	open
2	closed	closed
3	open	open
4	closed	open

NOTE:
In the open position, the rocker is down on the side opposite the number. In the closed position, the rocker is down on the side adjacent to the number.

5. Move the locking slide on the replacement power unit to the extreme left position and open the locking lever.
6. Insert the power unit into the carrier until some resistance is felt.
7. Lift the locking lever upward until it latches.
8. Move the locking lever slide on the power unit to the extreme right position.
9. Connect the power cord and set the power switch to ON.

Replacing a 631DA or 631DB AC power unit

To replace the power unit use the following procedures and Figure 5-2.

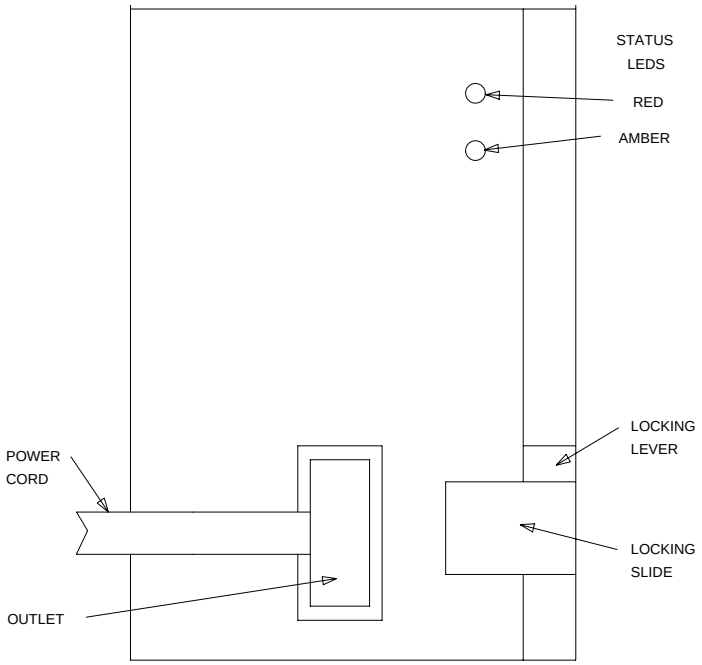

Figure 5-2. 631DA or 631DB AC Power Unit

1. Unplug the power cord.
2. Move the locking slide on the power unit to the extreme left position and unlatch the locking lever.
3. Remove the power unit from the carrier.
4. Move the locking slide on the replacement power unit to the extreme left position and open the locking lever.
5. Insert the power unit into the carrier until some resistance is felt.
6. Lift the locking lever upward until it latches.
7. Move the locking lever slide on the power unit to the extreme right position.
8. Connect the power cord and set the power switch to ON.

Replacing a TN736 or TN752 power unit circuit pack

Replacing either power unit interrupts the -5 volt supply to the carrier. This causes all the analog circuit packs in the carrier to fail their Loop Around Tests and may cause failures in circuit packs in the control complex. After the power unit has been replaced, look for these alarms:

- ANL-LINE alarms — refer to Test #47 (Loop Around and Conference Test) in "ANL-LINE (8-Port Analog Line), ANL-NE-L (8-Port Neon Analog Line)".
- CO-TRK alarms — refer to Test #33 (Loop Around and Conference Test) in "CO-TRK (CO Trunk)".

All other power supplies

Figure 5-3 on page 5-16 and Figure 5-4 on page 5-17 provide views of the power supply sub-assembly. Figure 5-5 on page 5-18 provides a view of the fan sub-assembly. The sections following the figures discuss how to disassemble the unit and then replace the power supply or fans within the unit.

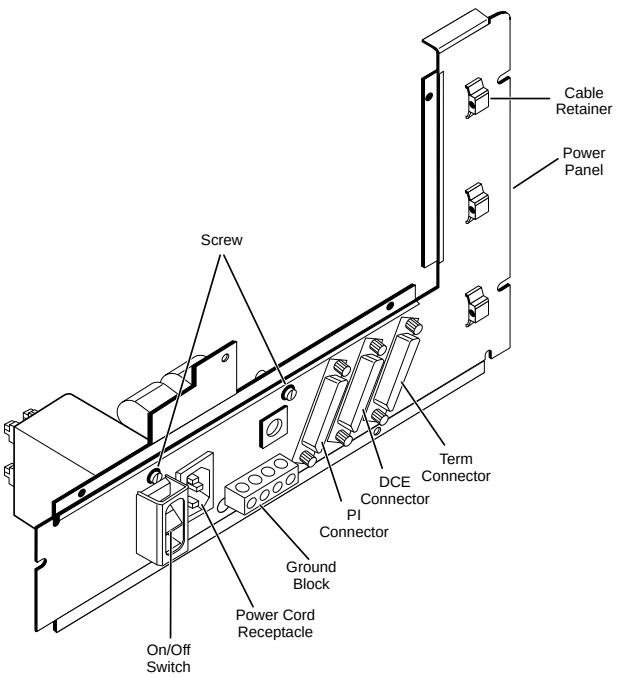

Figure 5-3. Power supply sub-assembly (outside view)

1. Remove the four screws on the top of the cabinet.
2. Remove the four screws from the fan panel at the rear of the unit.
3. Remove the fan panel.
4. If the unit is attached to the wall, disconnect the entire fan panel.
5. A cable assembly extends from the power supply and plugs into the backplane with a Burndy connector. Squeeze the sides of the connector to release the latch. Then pull the connector off of the backplane. See Figure 5-4.

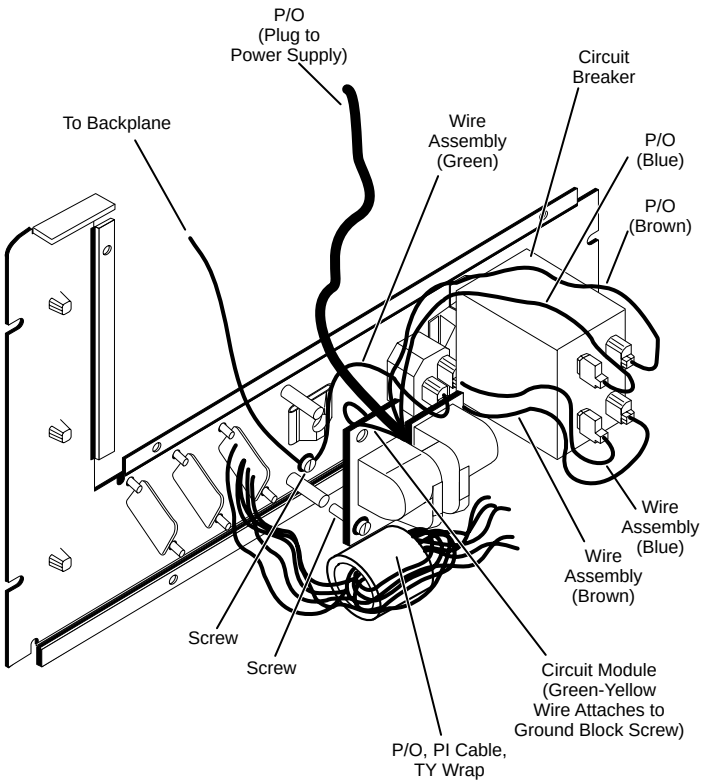

Figure 5-4. Power supply sub-assembly (inside view)

6. Remove the power supply from the unit. Once the power supply is removed, disconnect the AC power cord.
7. Reconnect the AC power cord, insert the new power supply, reconnect the Burndy connector and the cord, reinsert (if removed) the reconnected fan panel, screw the fan panel back onto the unit, and reinsert the screws on the top of the unit.

Fans

See Figure 5-5 while performing the following steps to replace the fan assembly.

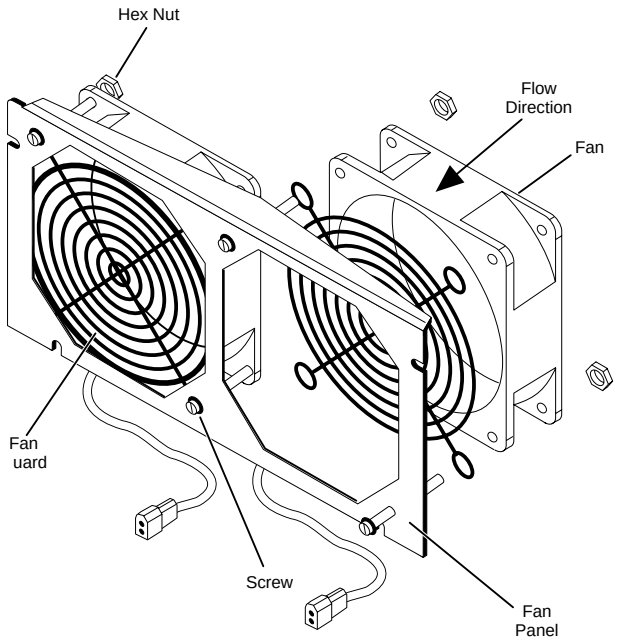

Figure 5-5. Fan sub-assembly

1. At the back of the unit, remove the four screws from the fan panel. Then remove the panel.
2. If the unit is attached to the wall, disconnect the entire fan panel.

   CAUTION:
   The power cord for each fan extends from a plug on the backplane. Do not tug on any of these cords. Otherwise, the corresponding plug on the backplane might come off.

3. Each fan has a power cord with a plug and receptacle at each end. Disconnect the plug for each fan that is to be replaced. Then remove the appropriate fan(s).
4. Install the new fan(s), reconnect the fan plug(s), reconnect the fan panel (if disconnected), and screw the fan panel back onto the back of the unit.

System Backup

System translations can be restored by using the data on the system or on the backup translation card if the length of power failure is appropriate for the corresponding system. Table 5-2 lists the requirements:

Table 5-2. Requirements for System Backup

Minimum Length of Power Failure (min.)	System
2	Single-Carrier Cabinet Standard System
2	Single-Carrier Cabinet (High or Critical Reliability)

Save Translation

To ensure that the translation card contains the most recent copy of the translation data, the system can automatically save the translation data onto the translation card every 24 hours. Automatic daily backup of the system translation data is controlled by an entry in the system parameters that defaults to “daily”.

If many translation data changes are made, it is recommended that you save the translation data using **save translation**. This action saves the new changes to the translation card without having to wait for the next automatic daily translation backup.

NOTE:
The **save translation** command blocks all maintenance commands except some **list, display**, **monitor**, and **status** commands.

The system blocks the execution of any commands that change translations or trigger a maintenance action (for example, **test board**, **busyout port**, and so forth). The **status card-mem** command is blocked during save translation.

In a high or critical reliability system, if **save translation** is entered without a qualifier, an attempt is made to save the translations on *both* the Active and Standby SPE. If the command is qualified with either “spe-active” or “spe-standby,” the translations are saved only on the specified SPE. For example, when the **save translation** command was used, the translations were successfully saved on the active SPE’s translation card, but were not successfully saved on the standby SPE’s translation card, use **save translation spe-standby** to save the translations on the standby SPE as well.

The system blocks the execution of any commands that change the translation, access a translation card, or trigger a maintenance action.

CAUTION:
It is recommended that “save translation” be performed after business hours so that dial tone delays are not encountered.

CAUTION:
Do not use the “save translation” command when alarm conditions are present.

Save Recorded Announcements

In a high or critical reliability system, if the **save announcements** command is entered without a qualifier, an attempt is made to save the integrated announcements on *both* the Active and Standby SPE. If the command is qualified with either “spe-active” or “spe-standby,” the integrated announcements are saved only on the specified SPE. For example, if, when the **save announcements** command was used, the integrated announcements were successfully saved on the Active SPE’s translation card, but were not successfully saved on the Standby SPE’s translation card, use the **save announcements spe-standby** command to save the announcements on the Standby SPE as well.

WARNING:
The "save announcements" commands should only be used after business hours or when the system is operating during a low usage period. The system takes about 45 minutes to one hour to transfer the recorded announcements from the Announcement circuit pack to the system tape. During this interval, use of the administration terminal is blocked for other activities until the command completes.

Translation Card Backup

In case of a power failure, the system translations can be restored using the translation card. Translation data can be saved during the daily scheduled maintenance. However, if the translation data changes frequently, translations should be saved frequently to ensure that the most up-to-date information is kept.

Note that only one translation card is provided with the system. It is recommended that the customer purchase additional translation cards to serve as backup or replacement. Translation cards should be alternated periodically.

It is also recommended that backup copies of the translation data be made weekly, or after many changes have been made to the translation data. This minimizes the loss of recent translation data changes if the translation card in the system becomes damaged.

Type **save announcements** to save recorded announcements in the system on the translation card.

NOTE:
A 10 MByte or larger translation card is required to save and restore announcements.

The system takes about 10 minutes to complete this task. Because the terminal is unavailable during this time, it is recommended that this command be used after business hours. During this time period, the terminal cannot be used to administer the system until the transfer is complete; however, all other terminals (if provided) are allowed to perform administration procedures.

Type **restore announcements** to restore the recorded announcements from the translation card back into system memory. The system takes about 22 minutes to complete this task. After completing the task, the system performs an audit to make sure that the announcements on the announcement circuit pack match the announcements administered in the system.

The working copy of the announcements is stored on the announcement circuit pack. A backup copy should be made on a 10 Mb or larger translation card. Use the following procedure to make a backup Memory Card:

1. Remove the translation card from the Netcon circuit pack.
2. Insert the backup translation card into the Netcon circuit pack.
3. Enter the **save translation** command and press Enter. This instructs the system to take all translation information in memory and transfer it into the translation card. The following display appears:

```
 save translation                                                    SPE A
                              SAVE TRANSLATION

Processor                      Command Completion Status        Error Code

SPE_A                                   Success                       0

Command successfully completely
```

Screen 5-1. Save Translation — SPEA

4. Verify that the command successfully completes. If not, an error message appears. In such a case, refer to the “Translation Card Errors” section.
5. If the system is equipped with a TN750 Announcement circuit pack, the recorded announcements can be saved using **save announcements**. Enter the command and press Enter. The following screen appears:

```
save announcements
                                SAVE ANNOUNCEMENTS

Processor                      Command Completion Status          Error Code

SPE_A                                    Success                       0

Command successfully completely
```

Screen 5-2. Save Announcements Screen — SPEA

6. Verify that the command successfully completes. If not, an error message appears. In such a case, refer to the “Translation Card Errors” section.
7. Remove the backup translation card and insert the original translation card.
8. Label the backup translation card with the date and time it was updated. A special notation on the card clearly distinguishes it from other cards.
9. Store the backup translation card in a secure place.

Translation Card Errors

Translation card-related failures may occur for two reasons: the card is at fault, or the Netcon circuit pack is at fault. The following is a list of the error messages and recommended responses to each.

1. `Cannot access file storage area`—Implies that the wrong translation card may be installed.

   Response: Check to see which translation card is installed. If the correct one is installed, test it.

2. `Cannot turn on 12 volt power supply`—Implies that something may be wrong with the Netcon circuit pack, which contains the power supply.

   Response: Test the 12-volt power supply by entering the **test card-mem** command from the terminal. Executing this command causes the system to run Test 701 (12 Volt Power Supply Test). If the power supply test fails, replace the Netcon circuit pack. Then repeat whichever command failed.

3. `Invalid directory on Card-Mem` — The translation card needs refreshing. Run **test card-mem** and be sure all tests pass.
4. `Card-Mem is unusable` — Something is wrong with the translation card. Replace the translation card.
5. `Could not write to Card-Mem` — Something is wrong with the translation card. Test the translation card.
6. `Cannot access mass storage system now; try again later` — The storage system is in use. Try again later.

7. `Request is incompatible with currently running operations` — The storage system is in use. Try again later.
8. `Card-Mem is not inserted in the system` — Insert the translation card.
9. `Cannot access file; wrong type of Card-Mem is inserted` — The correct translation card for the desired operation has not been inserted. Load the appropriate translation card.
10. `File size exceeded` — There is no more file space. Call your Avaya representative.
11. `Upgrade Memory Card inserted` — The system upgrade translation card may have been inserted instead of the translations card. Insert the translation card.
12. `Card-Mem is write-protected` — The switch on the top side of the translation card is incorrectly set. Move the switch to the down position.
13. `Transmission problem; please try later` — There is a problem communicating with the announcement circuit pack. Check to see that the announcement circuit pack has been correctly administered. Use the **change data <extension_number>** command. Verify that the announcement circuit pack is in the correct slot in the processor. If so, wait and retry.
14. `Command has been aborted; please try later` — The command was pre-empted. Try again later.
15. `Saved copy of translations is unusable` — The copy of the translations on your translation card is faulty. Re-type **save translation**.

Software Upgrade

To perform a software upgrade, use the procedures described in *Made Easy Tools* on your documentation CD.

Preventive Maintenance Procedures

Preventive Maintenance Log

Table 5-3 shows the Avaya DEFINITY Server Preventive Maintenance Log. Post this table near the switch. When you complete a maintenance procedure described in this section, fill in the information in the spaces provided.

Date equipment installed: _____

Table 5-3. Preventive Maintenance Log, Avaya DEFINITY Servers

Air Filters[1]	Scheduled Date	Date Completed	Completed By	Scheduled Date	Date Completed	Completed By
Single-carrier cabinet						
Multi-carrier cabinet						

Battery Packs[2]	Scheduled Date	Date Completed	Completed By	Scheduled Date	Date Completed	Completed By
Single-carrier cabinet						
Multi-carrier cabinet						

1 Inspect annually; clean or replace. See "Air Filters" below.
2 Replace every 4 years. See "Batteries" below.

Post this form with the equipment.

Air Filters

Inspect air filters annually. If a filter is dirty or clogged, tap it on the ground. If the filter is still dirty or clogged, wash it with warm water and a mild detergent. A vacuum cleaner can also be used. If there is no facility for washing or vacuuming the air filter, replace the filter. Refer to ''CABINET (Cabinet Sensors)'' maintenance object for more information on air filters and fans.

Batteries

Replace batteries every 4 years or when a POWER alarm occurs in the system.

Tape Head/Capstan

If the system contains a tape backup, clean the tape drive head (also called the tape head) at least once a year, as part of the preventive maintenance strategy. Because new tapes leave more abrasive particles on the tape head than used tapes, it is recommended that you inspect the tape head during each maintenance visit and that you clean the tape head several times a year. Place a dated label on the tape drive unit after the tape head is cleaned.

Access the tape head from the front of the drive by opening the tape access door with your finger. Refer to TAPE Maintenance documentation for more details on cleaning the tape head.

System Features

In addition to various maintenance and test commands (described in Chapter 8, ''Maintenance Commands and Trouble-Clearing Aids''), the following features may also be useful in troubleshooting certain system resources:

- Automatic Circuit Assurance (ACA)
- Busy Verification of Terminals and Trunks
- Trunk Group Busy/Warning Indicators to Attendant
- Trunk Identification by Attendant
- Facility Test Calls
- Analog Tie Trunk Back-to-Back Testing
- Terminating Trunk Transmission Testing
- Troubleshooting ISDN-PRI Problems
- Troubleshooting PRI Endpoint Problems
- Troubleshooting ISDN-PRI Test Calls

See *Administrator's Guide for Avaya MultiVantage Software* for feature descriptions.

See *DEFINITY Communications System Generic 1 and Generic 3 — Console Operations*, 555-230-700, and *DEFINITY Communications System Generic 1 and Generic 3 Voice Terminal Operations* for detailed operating procedures (does not include Facility Test Calls, Analog Tie Trunk Back-to-Back Testing, Terminating Trunk Transmission Testing, Troubleshooting ISDN-PRI Problems, Troubleshooting ISDN-PRI Test Calls, or Troubleshooting ISDN-BRI Problems described in this chapter.)

Automatic Circuit Assurance

Requires a display-equipped voice terminal (may be nondisplay type if the Voice Message Retrieval feature is provided) or an attendant console. An "ACA activate/deactivate" button (one per system) is required on the voice terminal or attendant console.

Automatic Circuit Assurance (ACA) assists users in identifying possible trunk malfunctions. The system maintains a record of the performance of individual trunks relative to short and long holding time calls. The system automatically initiates a referral call to an attendant console or display-equipped voice terminal when a possible failure is detected.

Holding time is the elapsed time from when a trunk is accessed to the time a trunk is released. When ACA is enabled via administration, the system measures the holding time of each call.

A short holding time limit and a long holding time limit are preset by the system manager for each trunk group. The short holding time limit can be from 0 to 160 seconds. The long holding time limit can be from 0 to 10 hours. The measured holding time for each call is compared to the preset limits for the trunk group being used.

Measurements are not made on personal CO lines, out-of-service trunks, or trunks undergoing maintenance testing.

Busy Verification of Terminals and Trunks

Requires the use of a multi-appearance voice terminal or attendant console equipped with a "verify" button.

Busy Verification of Terminals and Trunks allows a user at a voice terminal or attendant console to make test calls to trunks, voice terminals, and hunt groups (DDC/UCD). These test calls check the status of an apparently busy resource. This provides an easy method to distinguish between a voice terminal or resource that is truly busy and one that only appears busy because of a trouble condition.

Trunk Group Busy/Warning Indicators to Attendant

Requires an attendant console.

Trunk Group Busy/Warning Indicators to Attendant provides the console user with a visual indication of the trunk group status for each trunk group associated with the 12 Trunk Group Select buttons located on the console. Trunk groups with busy indications during nonbusy periods should be checked to ensure that the trunks are busy and not out-of-service. Use the Busy Verification of Terminals and Trunks feature to test the suspected faulty trunks.

Trunk Identification by Attendant

Requires a display-equipped voice terminal or an attendant console equipped with a "trunk id" button.

Trunk Identification by Attendant allows a voice terminal or attendant console user to identify a specific trunk being used on a call. This is useful when a user experiences noise or poor transmission on a trunk call. The trunk identification (access code and group number) is displayed when the "trunk id" button is pressed while on a trunk call. Use of this feature is denied if there are more than two trunks on a call. If the call is trunk-to-trunk, the identification displayed is of the last trunk added to the call.

Facility test calls

The Facility Test Calls feature provides a voice terminal user the capability of placing test calls to access specific trunks, touch-tone (DTMF) receivers, time slots, and system tones. The test call can be made by a local voice terminal user by dialing an access code.

NOTE:
For the ISDN-PRI Test Call feature, see "Troubleshooting ISDN-PRI Test Call Problems" later in this chapter.

NOTE:
The following test call descriptions are for voice terminal users:

Trunk test call

The trunk test call accesses specific Tie or CO trunks. DID trunks cannot be accessed.

NOTE:
Do not use this trunk test call procedure to test ISDN-PRI or ATM-CES trunks. For more information on testing ISDN-PRI or ATM-CES trunks, see ATM-BCH, Test #258.

To place a call:

1. Dial the Facility Test Call Feature Access Code (administered on the Feature Access Codes screen), and listen for dial tone.
2. Dial the 6-digit port number "PCSSpp"

P	=	Port network number (01 for PPN or 02 or 03 for EPN)
C	=	Carrier number (A=1, B=2, C=3, D=4, E=5)
SS	=	Slot number (01—20)
pp	=	Port number

The channels on a DS1 trunk are addressed by using the channel number for the port number.

3. Listen for one of the following tones:
   - Dial Tone or Silence—trunk is connected. Go to Step 4. If you hear a dial tone, it is coming from the far end. If the far end has been disabled, you do not hear dial tone. However, depending on far-end administration, you may still be able to dial digits. All digits dialed after the port number are transmitted using end-to-end DTMF signaling; therefore, if the trunk being tested is a rotary trunk, it is not possible to break dial tone.
   - Reorder Tone—trunk is busy or maintenance busy.
   - Intercept Tone— a trunk or touch-tone (DTMF) receiver has not been accessed.
4. Place a call. Even if you do not hear a dial tone, you may still be able to dial digits, depending on the administration of the far-end switch.

   All digits dialed after the port number are transmitted using end-to-end DTMF signaling; therefore, if the trunk being tested is a rotary trunk, it will not be possible to break dial tone.

   If the call does not go through (that is, no ringing), determine if the trunk circuit pack has been removed.

Touch-tone (DTMF) Receiver Test Call

The touch-tone (DTMF) receiver call accesses and tests the four touch-tone (DTMF) receivers located on the Tone Detector circuit pack. **To place the call:**

1. Dial the Facility Test Call Feature Access Code (administered on the Feature Access Codes screen), and listen for dial tone.
2. Dial the 6-digit port number "PCSSpp":

P	=	Port network number (01 for PPN or 02 or 03 for EPN)
C	=	Carrier number (A=1, B=2, C=3, D=4, E=5)
SS	=	Slot number (01—20)
pp	=	Touch-tone (DTMF) Receiver Port number (01, 02, 05, or 06)

3. Listen for one of the following tones:
   - Confirmation Tone—touch-tone (DTMF) receiver is connected. Go to Step 4.
   - Reorder Tone—touch-tone (DTMF) receiver is busy.
   - Intercept Tone—a touch-tone (DTMF) receiver or trunk has not been accessed.

4. Dial **1234567890*#** and listen for Confirmation tone (test passed) or intercept tone (test failed). The test fails if the touch-tone (DTMF) receiver does not recognize all the touch-tone (DTMF) signals.
5. To test another touch-tone (DTMF) receiver, repeat Steps 2 through 4.
6. To terminate the test call, hang up the station set used for testing.

Time Slot Test Call

The time slot test call connects the voice terminal user to a specific time slot located on the TDM Buses (A or B) or out-of-service time slots. **Specific Time Slots To place the call:**

1. Dial the Facility Test Call Feature Access Code (administered on the Feature Access Codes screen), and listen for dial tone.
2. Dial port network number (1 for PPN or 2 or 3 for EPN), then press # and the 3-digit time slot number "xxx," where:

   xxx = Time slot number (000 through 255 on Bus A and 256 through 511 on Bus B)

3. Listen for one of the following tones:
   - Confirmation Tone—time slot is idle or maintenance busy
   - Reorder Tone—time slot is busy
   - Dedicated Tone—One of the following tones is heard (see Table 5-4 on page 5-31)

Table 5-4. TDM Bus Time Slot Numbers

TDM Bus A time slot	TDM Bus B time slot	Tone Heard
000	256	Reorder
001	257	Reorder
002	258	Reorder
003	259	Reorder
004	260	Reorder
005	261	Touch Tone 1 - 697Hz
006	262	Touch Tone 2 - 770 Hz
007	263	Touch Tone 3 - 852Hz
008	264	Touch Tone 4 - 941 Hz
009	265	Touch Tone 5 - 1209 Hz
010	266	Touch Tone 6 - 1336Hz
011	267	Touch Tone 7 - 1447 Hz
012	268	Touch Tone 8 - 1633 Hz
013	269	Dial Tone
014	270	Reorder Tone
015	271	Alert Tone
016	272	Busy Tone
017	273	Ringback Tone
018	274	Special Ringback Tone
019	275	2225 Hz Tone
020	276	Music
021	277	Tone on Hold
022-253	278-509	Confirmation (used for calls)
254	510	Reorder
255	511	Confirmation

Out-of-Service Time Slots To place the call:

1. Dial the Facility Test Call Feature Access Code (administered on the Feature Access Codes screen), and listen for dial tone.
2. Dial port network number (1 for PPN or 2 or 3 for EPN), then dial **** and listen for the following tones:
   - Confirmation Tone—Connection is made. Go to Step 3.
   - Reorder Tone—No time slots are out-of-service.
3. Repeat from Step 1 to alternate between out-of-service time slots on TDM Bus A and B.

System Tone Test Call

The system tone test call connects the voice terminal user to a specific system tone. **To place the call:**

1. Dial the Facility Test Call Feature Access Code (administered on the Feature Access Codes screen), and listen for dial tone.
2. Dial port network number (1 for PPN or 2 or 3 for EPN), then dial * followed by the two-digit tone identification number listed in Table 5-5 on page 5-33.
3. Listen for the tone that was specified.

NOTE:
For a definition of Call Progress Tones see *Avaya MultiVantage Hardware Solutions Guide*.

Table 5-5. System Tone Identification Numbers

Number	Description
00	Null tone
01	Dial tone
02	Reorder tone
03	Alert tone
04	Busy tone
05	Recall dial tone
06	Confirmation tone
07	Internal call waiting tone
08	Ringback tone
09	Special ringback tone
10	Dedicated ringback tone
11	Dedicated special ringback tone
12	Touch tone 1
13	Touch tone 2
14	Touch tone 3
15	Touch tone 4
16	Touch tone 5
17	Touch tone 6
18	Touch tone 7
19	Touch tone 8
20	Chime
21	350 Hz
22	440 Hz
23	480 Hz
24	620 Hz
25	2025 Hz
26	2225 Hz
27	Counter
28	External call waiting
29	Priority call waiting

Continued on next page

Table 5-5. System Tone Identification Numbers — *Continued*

Number	Description
30	Busy verification
31	Executive override/intrusion tone
32	Incoming call identification
33	Dial zero
34	Attendant transfer
35	Test calls
36	Recall on don't answer
37	Audible ring
38	Camp-on recall
39	Camp-on confirmation
40	Hold recall
41	Hold confirmation
42	Zip tone
43	2804 Hz
44	1004 Hz (-16db)
45	1004 Hz (0 db)
46	404 Hz
47	Transmission test sequence 105
48	Redirect tone
49	Voice signaling tone
50	Digital milliwatt
51	440 Hz + 480 Hz
52	Music
53	Transmission test sequence 100
54	Transmission test sequence 102
55	Laboratory test tone 1
56	Laboratory test tone 2
57	Disable echo supervision dial tone
58	7 seconds of answer tone
59	4 seconds of answer tone

Continued on next page

Table 5-5. System Tone Identification Numbers — *Continued*

Number	Description
60	Restore music (or silence)
61	Warning tone
62	Forced music tone
63	Zip tone (first of 2 sent)
64	Incoming call ID (first of 2 sent)
65	Tone on hold
66	CO dial tone
67	Repetitive confirmation tone
68	Conference/bridging tone

Analog Tie Trunk Back-to-Back Testing

The TN760B circuit pack can be configured for back-to-back testing (also known as connectivity testing) by making translation and cross-connect changes. This testing configuration allows for the connection of Tie Trunks back-to-back in the same switch to verify the operation of Tie Trunk ports. The tests can be performed in either the E & M or simplex modes.

E & M Mode Test Procedure

The procedures to perform the Analog Tie Trunk port test in the E & M mode are as follows:

1. At the administration terminal, enter **list configuration trunks** command to determine which ports are assigned on the Tie Trunk circuit pack.
2. Enter **display dialplan** command to determine the Trunk Access Code (TAC) format.
3. Enter **display port xx** command for all ports defined in Step 1. This action displays the trunk groups to which the ports belong (that is, of which the ports are members).

   NOTE:
   See the "Handling Control Circuit Packs" section in this chapter for details on how to remove and replace port circuit packs.

4. Insert the circuit pack back into the slot.
5. Enter **display trunk xx p** command for each trunk group identified in Step 3. This command displays the specified trunk group on the administration terminal screen and prints a hard copy on the printer. Save this data for later use.
6. Remove all members defined by these ports from the trunk group(s) using the **ch trunk xx** command.
7. Remove the Tie Trunk circuit pack from the carrier slot.
8. Set the dip (option) switches for each of the two ports to be tested on the Tie Trunk circuit pack to "E & M mode" and "unprotected."
9. Enter **add trunk n** command to add a new (test) trunk group. Then enter the following information:
   - Group Type — tie
   - TAC — (use trunk access code obtained from dial plan)
   - Trunk Type (in/out) — wink/wink
   - Port — assign two of the ports from the tie trunk
   - Mode — E & M
   - Type — specify one port as t1 standard and other port as t1 compatible

Examples of Trunk Group forms are shown in Screen 5-3 and Screen 5-4.

```
display trunk-group 10                                          Page 1 of 5
                                   TRUNK GROUP

Group Number: 10                   Group Type: tie           CDR Reports? y
  Group Name: tr 10                       COR: 1                     TAC: 110
   Direction: two-way        Outgoing Display? n        Data Restriction? n
MIS Measured? n
 Dial Access? y                 Busy Threshold: 60           Night Service:
Queue Length: 0                 Internal Alert? n     Incoming Destination:
   Comm Type: voice                  Auth Code? n


TRUNK PARAMETERS

   Trunk Type (in/out): wink/wink        Incoming Rotary Timeout(sec): 5
    Outgoing Dial Type: tone                       Incoming Dial Type: tone
                                              Disconnect Timing(msec): 500
       Digit Treatment:                                        Digits:
          Used for DCS? n
        ACA Assignment? n

                 Baud Rate: 1200     Synchronization: async   Duplex: full
         Incoming Dial Tone? y                     Maintenance Tests? y
 Answer Supervision Timeout:                    Suppress # Outpulsing? n
```

Screen 5-3. Trunk Group Form (Page 1 of 2)

```
                                                                Page 2 of 5
                                   TRUNK GROUP

GROUP MEMBER ASSIGNMENTS

                  Port       Name          Mode          Type     Answer Delay

               1: B1901                    E & M         t1 stan
               2: B1902                    E & M         t1 comp
               3:
               4:
               5:
               6:
               7:
               8:
               9:
              10:
              11:
              12:
              13:
              14:
              15:
```

Screen 5-4. Trunk Group Form — E & M Mode (Page 2 of 2)

10. Locate the Tie Trunk port terminal connections at the cross-connect field. See Table 5-6 on page 5-38.

11. At the cross-connect field, disconnect outside trunk facilities from the Tie Trunk ports and mark the disconnected wires for later reconnecting the Tie Trunk ports back to normal operation. The D Impact Tool (AT-8762) is required to perform this step.
12. Use jumper wires (DT 24M-Y/BL/R/G and DT 24P-W/BRN) and the D Impact Tool to connect wiring between the two ports assigned in Step 9 at the cross-connect field. For example, if the two ports on the Analog Tie Trunk circuit pack are port 1 and 2, connect the wirings as shown below:

```
Port    1                                    Port    2

T1   ------------------------------------------ T12
R1   ------------------------------------------ R12
T11  ------------------------------------------ T2
R11  ------------------------------------------ R2
E1   ------------------------------------------ M2
M1   ------------------------------------------ E2

t1   stan                                     t1   comp
E&M                                           E&M
```

13. Check all wirings to verify good connections between the two test ports.
14. Place a call from one voice terminal to another voice terminal using the Tie Trunk ports assigned. Dial TAC and extension. For example, if TAC of Tie Trunk group is 110 and station number is 5012, then dial 110 5012. If the call cannot be made, either one of these ports could be defective. There are four ports on TN760B (port 1, 2, 3, and 4), try different combinations to determine defective ports.
15. If there is a defective port on the circuit pack, try to switch to an unused port. However, if all ports are normally used, then replace the circuit pack.
16. Disconnect the jumpers between two ports. Then use administration terminal and trunk printouts to restore all trunk group changes to normal values.

Table 5-6. Carrier Lead Appearances at 110 Cross-Connect Field

110 Connecting Block Terminals	CO Trunk TN747B	Tie Trunk TN760B
1	T1	T1
2	R1	R1
3		T11
4		R11
5		E1

Continued on next page

Table 5-6. Carrier Lead Appearances at 110 Cross-Connect Field — *Continued*

110 Connecting Block Terminals	CO Trunk TN747B	Tie Trunk TN760B
6		M1
7	T2	T2
8	R2	R2
9		T12
10		R12
11		E2
12		M2
13	T3	T3
14	R3	R3
15		T13
16		R13
17		E3
18		M3
19	T4	T4
20	R4	R4
21		T14
22		R14
23		E4
24		M4
25	T5	
26	R5	
27		
28		
29		
30		
31	T6	
32	R6	
32		
33		

Continued on next page

Table 5-6. Carrier Lead Appearances at 110 Cross-Connect Field — *Continued*

110 Connecting Block Terminals	CO Trunk TN747B	Tie Trunk TN760B
34		
36		
37	T7	
38	R7	
39		
40		
41		
42		
43	T8	
44	R8	
45		
46		
47		
48		
49		
50		

Simplex Mode Test Procedure

To perform the Analog Tie Trunk Port Test in the simplex mode:

1. Repeat Steps 1 through 7 of the E & M Mode Test Procedure.
2. Set the dip (option) switches for each of the two ports to be tested on the Tie Trunk circuit pack to simplex mode.
3. Enter **add trunk n** to add a new (test) trunk group. Then enter:
   - Group Type — tie
   - TAC — (use trunk access code obtained from dial plan)
   - Trunk Type (in/out) — wink/wink
   - Port — assign two of the ports from the tie trunk
   - Mode — simplex
   - Type — type 5

An example of the Trunk Group Form Page 2 is shown in Screen 5-5.

```
                                                                  Page 2 of 5
                                   TRUNK GROUP

GROUP MEMBER ASSIGNMENTS

                 Port      Name          Mode          Type    Answer Delay

              1: B1901                   simplex       type 5
              2: B1902                   simplex       type 5
              3:
              4:
              5:
              6:
              7:
              8:
              9:
             10:
             11:
             12:
             13:
             14:
             15:
```

Screen 5-5. Trunk Group Form — Simplex Mode (Page 2 of 5)

4. Locate the Tie Trunk port terminal connections at the cross-connect field. See Table 5-6 on page 5-38.
5. At the cross-connect field, disconnect outside trunk facilities from the Analog Tie Trunk ports and mark the disconnected wires for later when the Tie Trunk ports are placed back into normal operation. The D Impact Tool (AT-8762) is required to perform this step.
6. Use jumper wires (DT 24M-Y/BL/R/G) and the D Impact Tool to connect wiring between the two ports assigned in Step 4 at the cross-connect field. For example, if the two ports on the Analog Tie Trunk circuit pack are ports 1 and 2, connect the wirings as shown below:

```
Port   1                                    Port   2

T1   ------------------------------------------ T12
R1   ------------------------------------------ R12
T11  ------------------------------------------ T2
R11  ------------------------------------------ R2

 ype   5                                     type   5
simplex                                      simplex
```

7. Repeat Steps 13 through 16 of the E & M Mode Test Procedure.

Terminating Trunk Transmission Testing

The Terminating Trunk Transmission (TTT) (noninteractive) feature provides for extension number access to three tone sequences that can be used for trunk transmission testing from the far end of the trunks.

The three test types should have extension numbers assigned on the Maintenance-Related System Parameters Form.

Test Type 100:_____ Test Type 102:_____ Test Type 105:_____

Test Type 100 provides:

1. 5.5 seconds of 1004 Hz tone at 0dB
2. Quiet until disconnect; disconnect is forced after one minute

Test Type 102 provides:

1. 9 seconds of 1004 Hz tone at 0dB
2. 1 second of quiet
3. This cycle is repeated until disconnect; disconnect is forced after 24 hours.

Test Type 105 provides:

1. nine seconds of 1004 Hz at -16dB
2. one second of quiet
3. nine seconds of 404 Hz at -16dB
4. one second of quiet
5. nine seconds of 2804 Hz at -16dB
6. 30 seconds of quiet
7. one half second of Test Progress Tone (2225 Hz)
8. approximately five seconds of quiet
9. forced disconnect

Troubleshooting ISDN-PRI Problems

The following flowchart, Figure 5-6 on page 5-43 and Figure 5-7 on page 5-44, defines a layered approach when troubleshooting ISDN-PRI problems. Since a problem at a lower layer affects upper layers, layers are investigated from low to high. In the flowchart, the DS1 facility is layer 1, the TN765 Processor Interface is layer 2, and the ISDN trunks are layer 3. Transient problems are diagnosed on Page 2 of the flowchart, Figure 5-7 on page 5-44.

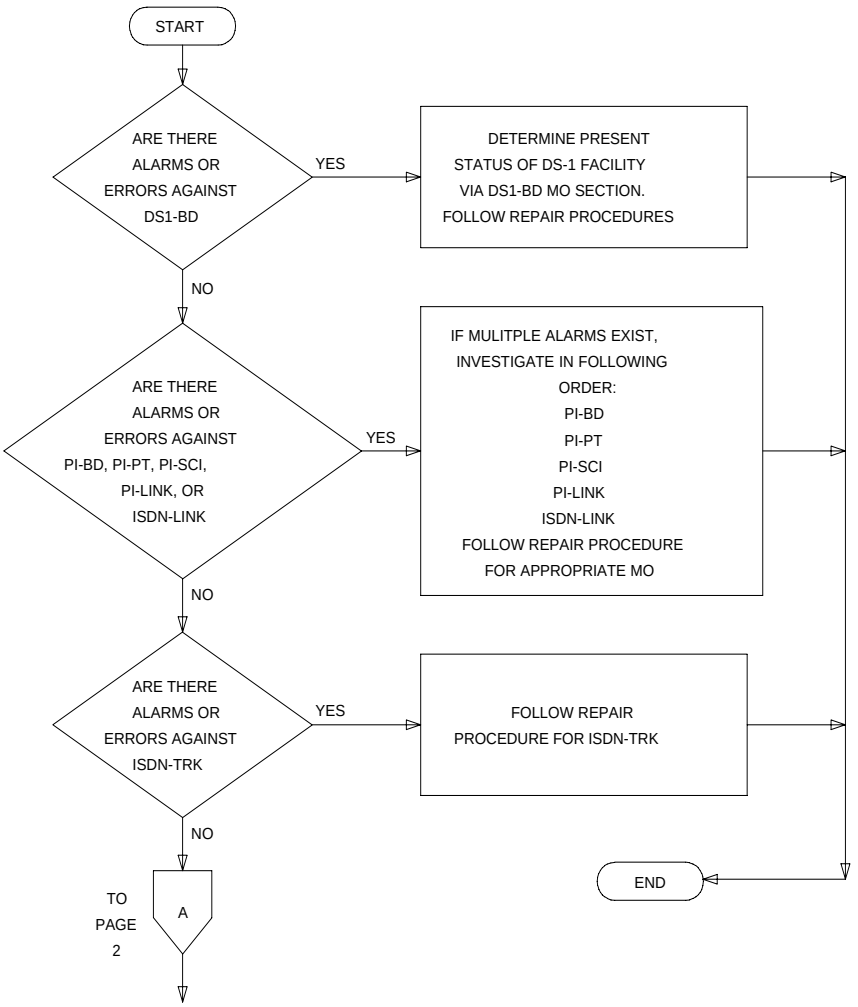

Figure 5-6. Processing of ISDN-PRI Problems (Page 1 of 2)

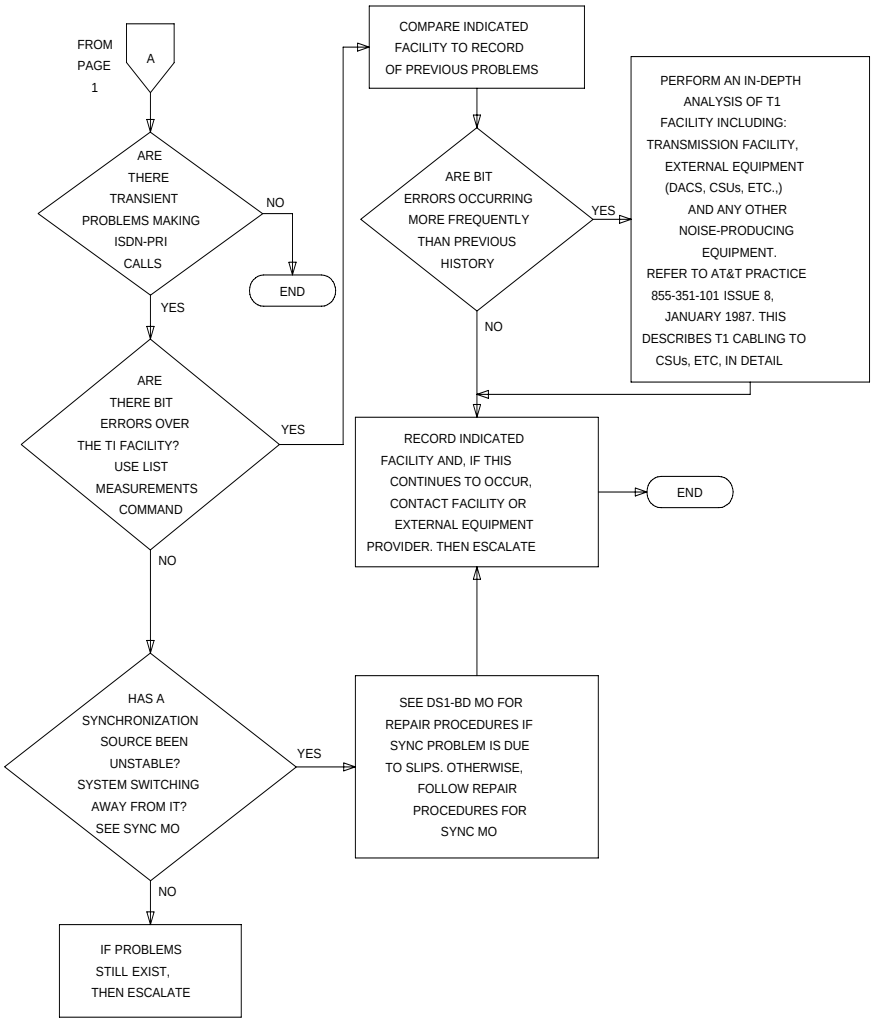

Figure 5-7. Processing of ISDN-PRI Problems (Page 2 of 2)

Troubleshooting PRI Endpoint Problems

The following flowchart, Figure 5-8 on page 5-45 and Figure 5-9 on page 5-46, defines a layered approach when troubleshooting PRI endpoint problems. Since a problem at a lower layer affects upper layers, layers are investigated from low to high. In the flowchart, the DS1 facility is layer 1, the TN765 Processor Interface is layer 2, and the ISDN trunks are layer 3.

The troubleshooting procedure described here diagnoses faults between the switch and the line-side PRI terminal adapter/ISDN-PRI endpoint equipment. Problems encountered on the network-side of a wideband connection or problems with end-to-end equipment compatibility are out of the scope of this section.

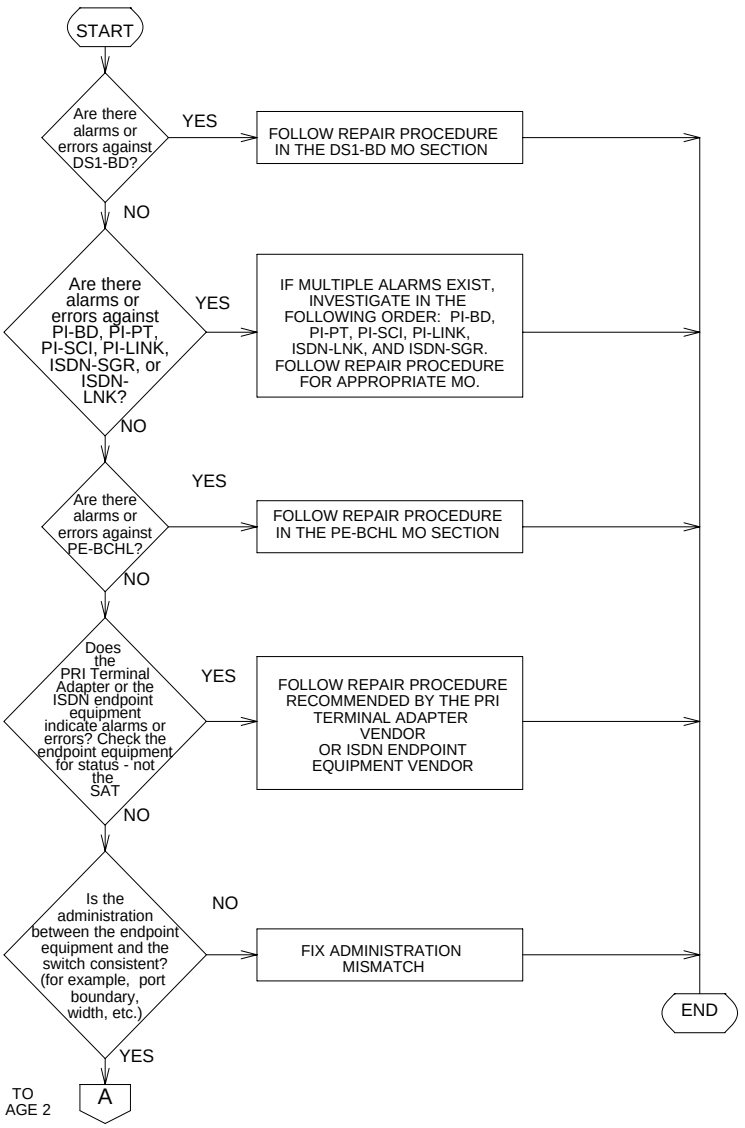

Figure 5-8. Processing of PRI Endpoint Problems (Page 1 of 2)

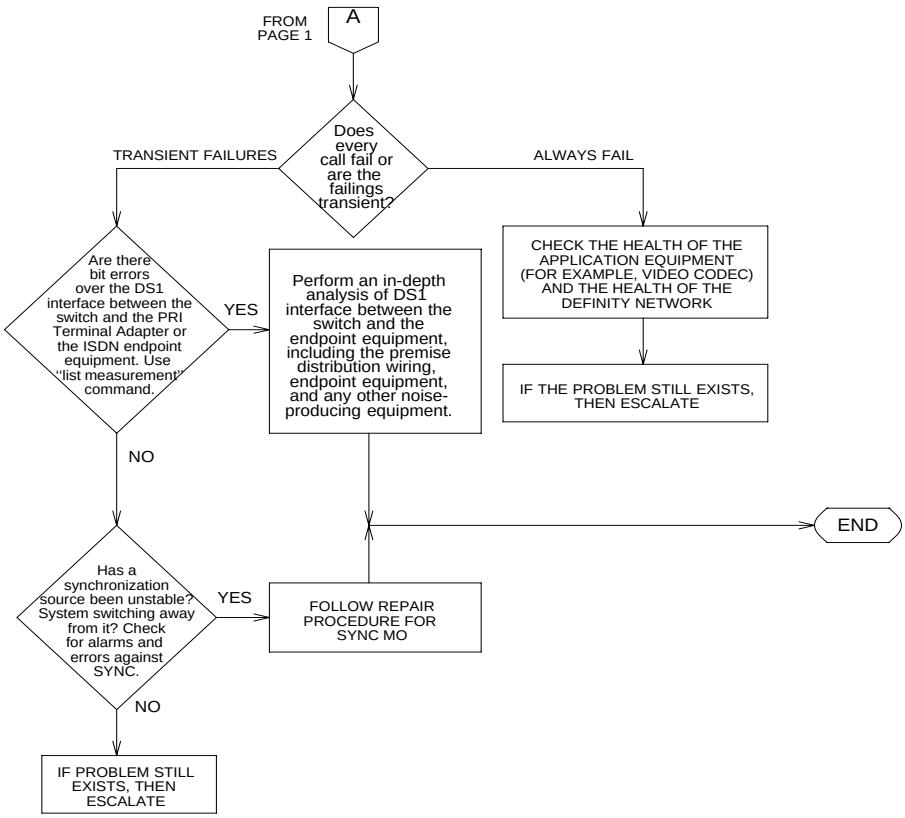

Figure 5-9. Processing of PRI Endpoint Problems (Page 2 of 2)

Troubleshooting ISDN-PRI Test Call Problems

An ISDN-PRI test call is a call of a diagnostic nature that is placed across an ISDN-PRI user-network interface to a previously designated number. An ISDN-PRI test call is also a maintenance procedure concerned with the identification and verification ISDN-PRI user-network interface problems. The ISDN-PRI test call can access ISDN-PRI trunks only.

Placing an Outgoing ISDN-PRI Test Call

NOTE:
An ISDN-PRI test call can be placed only if the circuit translates to an ISDN-PRI trunk.

An ISDN-PRI test call can be originated by via either the *synchronous* or the *asynchronous* method:

Synchronous Method

Use one command to start, stop and query an ISDN-PRI test call. In the synchronous method, an outgoing ISDN-PRI test call may be part of a system technician-demanded long test sequence to test a circuit pack, port, or trunk. The command line entry can be any of the following:

test trunk <grp>/<mbr> long [repeat #]

test port PCSSpp long [repeat #]

test board PCSS long [repeat #]

Use the "long" qualifier in order for the ISDN test call to run. The repeat number (#) can be any number from 1 through 99 (default = 1).

The following information is displayed in response to the above commands:

- **Port**: The port address (PCSSpp) is the port network number, carrier designation, slot, and circuit of the maintenance object under test.
- **Maintenance Name**: The type of maintenance object tested.
- **Test Number**: The actual test that was run.
- **Test Results**: Indicates whether the test passes, fails, or aborts.
- **Error Code**: Additional information about the results of the test.

Asynchronous Method

NOTE:
The asynchronous method requires a Maintenance/Test circuit pack to be physically present in the system.

In this method, four commands are used to start, stop, query, and list an outgoing ISDN-PRI test call. These commands are as follows:

clear isdn-testcall <grp>/<mbr> (stop)

list isdn-testcall (list)

status isdn-testcall <grp>/<mbr> (query)

test isdn-testcall <grp>/<mbr> [minutes] (start)

NOTE:
Before placing an outgoing ISDN-PRI test call, verify that the FAC on the System Features Form has been administered as well as the Far End Test Line No and TestCall Bearer Capability Class (BCC) on the Trunk Group Administration Form. Furthermore, if the ISDN-PRI trunk is of the "cbc" (call by call) service type, then the Testcall Service field on Trunk Group Administration Form must have been administered also.

To initiate an outgoing ISDN-PRI test call in the asynchronous method, use the following command:

test isdn-testcall <grp>/<mbr> [minutes]

This command enables you to specify a specific the trunk on which to originate the ISDN-PRI test call.

NOTE:
The optional qualifier can also be used that specifies in minutes the duration of the test call. If no duration is specified, the default duration is used which is 8.4 or 9.6 seconds. The qualifier "minutes" accepts the numeric values one through 120 (that is, two hours = 120 minutes).

Screen 5-6 shows a typical response to **test isdn-testcall**:

```
test isdn-testcall


Port     Maintenance Name    Test Number    Test Result   Error Code

1B1501   ISDN-TRK              258            PASS
```

Screen 5-6. Typical Response to Test ISDN-Testcall Command

The meaning of the information displayed in response to the above command is described in the following list.

- **Port**: The port address (PCSSpp) is the port network number, carrier designation, slot, and circuit of the maintenance object under test.
- **Maintenance Name**: The type of maintenance object tested.
- **Test Number**: The actual test that was run.
- **Test Results**: Indicates whether the test passes, fails, or aborts.
- **Error Code**: Additional information about the results of the test. (See the ISDN Trunk Maintenance documentation for details.)

The functions of the **clear**, **list**, and **status** commands associated with the ISDN Testcall are summarized in the following list. For more detailed information, refer to the appropriate sections as directed.

- **Clear isdn-testcall <grp>/<mbr>** enables you to cancel an in-progress ISDN-PRI test call and allow another test call to start. For details on this command, refer to the **clear isdn-testcall** command description in the "Clear Commands" section of Chapter 8, ''Maintenance Commands and Trouble-Clearing Aids''.
- **List isdn-testcall <grp>/<mbr>** enables you to list all the ISDN-PRI trunks in use for an ISDN-PRI test call in the system. For details on this command, refer to the **list isdn-testcall** command description in the "List Commands" section of Chapter 8, ''Maintenance Commands and Trouble-Clearing Aids''.
- **Status isdn-testcall <grp>/<mbr no> [minutes]** enables you to check on the progress of an outgoing test call. When an outgoing ISDN-PRI test call completes in a specific port network, another ISDN-PRI trunk from the same port network is available for testing (regardless of whether the **status** information has been displayed). For details on this command, refer to the **status isdn-testcall** command description in the "Status Commands" section of Chapter 8, ''Maintenance Commands and Trouble-Clearing Aids''.

Troubleshooting the Outgoing ISDN-Testcall Command

If the TestCall BCC field appears on the Trunk Group Administration Form, make sure the TestCall BCC field indicates the correct BCC for the service provisioned on the ISDN-PRI trunk. The TestCall BCC values are defined as follows:

- 0—Voice
- 1—Digital Communications Protocol Mode 1
- 2—Mode 2 Asynchronous
- 3—Mode 3 Circuit
- 4—Digital Communications Protocol Mode 0 (which is usually the default).

NOTE:
If the ISDN-PRI trunk is of type "cbc," make sure the TestCall Service field on the Trunk Group Administration Form indicates the correct service so that a network facility message can be sent across the ISDN-PRI network.

If the outgoing ISDN-PRI test call keeps aborting, please make sure that the far-end device can handle DCP Mode 0 or DCP Mode 1.

NOTE:
Before attempting to make an ISDN-PRI test call to the public network (that is, the network is the far-end), make sure that test call service is provisioned

by the network. The user must subscribe to Test Type 108 service and have the correct far-end test call number administered on the trunk group form for the call to be allowed.

Troubleshooting Backplane Voltage Problems

The TN2036 Voltage Range circuit pack is a test tool that allows easy access to the backplane pins that provide various voltages to control and port slots. Probes from a voltmeter can be plugged into the access point for the desired voltage and a ground access point to measure the voltage. This circuit pack itself has instructions for use printed on the side as well as a listing of the voltage tolerance range for each voltage on the front panel. The voltages and tolerances are as follows:

ringing voltage: 75 -> 115 VAC

+12 VDC: 11.4 -> 12.6 VDC

+5 VDC: 4.95 -> 5.35 VDC

-5 VDC: -4.95 -> -5.35 VDC

-48 VDC: -43 -> -53 VDC

neon message waiting voltage: -80 VDC -> -165 VDC

The type of cabinet determines where the circuit is placed to measure the voltages. For single-carrier cabinets, all voltages except +12 VDC and +5 VDC can be measured from any port slot. However, the neon message waiting voltage requires that the system have a TN752 or TN755 Power Unit circuit pack. The Tape Drive slot is used to measure +12 VDC.

NOTE:
All control circuit packs should be removed from the backplane before this measurement is made.

The +5 VDC measurement must be made in two separate cabinet locations since the power unit has two independent +5 VDC outputs [+5 VDC and +5(B) VDC]. Each output supplies a different section of the cabinet with power. For the control cabinet, make one measurement in the processor slot and another in any port slot. For an EPN control cabinet, make one measurement in any port slot from 1 to 4 and another in any port slot from 5 to 16. For a port cabinet, make 1 measurement in any port slot from 1 to 6 and another in any port slot from 7 to 18.

Multimedia Call Handling (MMCH)

Expansion Services Module

The Expansion Services Module (ESM) shown in Figure 5-10 provides T.120 data sharing capability on a MMCH multipoint H.320 video conference. Each conference participant must have endpoints administered and a personal computer with the H.320 video application installed. The Avaya DEFINITY Server must have an expansion service module.

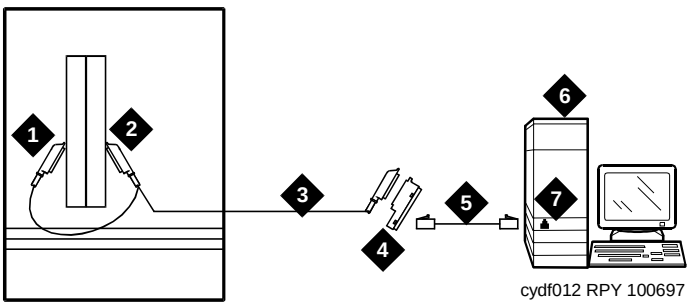

Figure Notes

1. Port B Y-cable connector to a TN787 Multimedia Interface (MMI) circuit pack
2. Port A Y-cable connector to a TN2207 PRI circuit pack
3. 25-pair Y-cable
4. 356A adapter
5. D8W cord connected to 356A adapter port 1
6. Expansion Service Module (ESM)
7. Port B on compatible primary rate interface (PRI) card

Figure 5-10. Typical ESM connections

CAUTION:
The TN2207 circuit pack is the only pack allowing connection of an ESM to the Avaya DEFINITY Server.

Troubleshooting MMCH

Before troubleshooting any problems associated with the DEFINITY MMCH, always be sure that the endpoint is operating correctly (audio, video, and data) by making point-to-point test calls. If possible, make the test calls over the network to test the connectivity and routing of network calls from the endpoint. This eliminates problems such as disconnected audio or video cables and network troubles.

64 Kbps Calls Terminate but Far End Receives 56 Kbps Indication

Description

Some 2x64 Kbps conferences on the DEFINITY MMCH do not establish because of framing, audio, or video problems.

For calls that are routed in the network through a Avaya/LEC interface, the originating equipment may launch a 64 Kbps call attempt, and the far end receives either a 56 Kbps or 64 Kbps indication. If the far end receives a 64 Kbps indication, the call may have used 56 Kbps facilities. If so, the call may exhibit any of the following conditions:

- No handshaking in one direction or both (call disconnects after timeouts)
- Call connects, but audio or video is corrupted (audio noise or no video)
- Call succeeds without disruption (this is the least likely since one endpoint must be aware that the call is really 56 Kbps to connect)

If any of the above conditions occur, then 64 Kbps calls from the site are blocked.

Solution

Administer the conference for connection at 56 Kbps.

Calls Terminate with No Audio

Description

To support endpoints that do not support Multipoint Command Conference (MCC), the DEFINITY MMCH changes its capability set and initiates a capability set exchange with the endpoint when the Selected Communications Mode (SCM) changes. If the endpoint does not follow the SCM audio mode, the MCU may include the endpoint as a secondary (audio only) endpoint. If the endpoint sends an unknown or unsupported audio mode, then the TN788B decoder port mutes the endpoint from the conference. The user may hear the conference but may not be heard by other parties in the conference.

Solution

1. Use the Status Conference x form and check the Audio Mode field for the current operating mode of the conference.
2. Another indication of the audio modes is in the “Incoming Mode Commands from Endpoint and Outgoing Commands from MMI” on page 3 of the Status Conference x Endpoint y form. Check the Audio fields under the Mode Commands/Communication Modes section of the form.

Some Parties Cannot Be Heard by Others (Audio Subsetting)

Description

Problems where varying subsets of the conference hear different things may have problems with the various summing resources/groups that are in use. Traditionally theses faults are caused by the SPE not cleaning up the connections properly. Isolation and diagnosis should focus on the VC resources in use by that conference.

Solution

1. Use the **status conference** command to list the VC resources in use by this conference. Try a hot replacement of any VC boards in use, which refreshes the VC translations and move all of the audio connections to different VC ports.
2. If the problem still exists, try dropping the conference and then bringing the conference back up again. Not only does this refresh VC translations, but uses different timeslots as well.
3. If the problem still exists, suspect a hardware problem. If practical, wait for the DEFINITY MMCH to be idle (no active conferences), and then check the circuit packs for active (yellow) LEDs. If any of these are unexpected, such as on a VC board, try replacing the board and then bringing the conference up again.

Calls Terminate with No Video

Description

Generally, loss of video can be divided into 2 types. The first occurs when the DEFINITY MMCH switches to the endpoint, but nobody sees them. The receivers see either “black” video or a frozen image of the previous speaker depending on the codec of the manufacturer. The type occurs when the DEFINITY MMCH does not switch to an endpoint.

Solution

In the first type described above, wiring problems, power to the camera, or video encoder circuit pack problems in the codec are typical causes.

In the second type, no video from an endpoint typically occurs because it is not a valid video source. This can be checked by looking at page 1 of the Status Conference x Endpoint y Vid form under the Capability section. In this section, a “y” or “c” suggests that the endpoint has video. An “e” means ept has not declared any video capability in cap set, “n” is audio only, and “blank” means audio add-on.

Also check page 1 of the Status Conference x Endpoint y Vs form for indication of the video state for the endpoint values.

Calls Terminate Correctly but Are Unstable

Description

A number of conditions will lead to some or all endpoints having stability problems during the course of a conference. A lack of stability from an endpoint is noticeable by a lack of a video switching while the party is the only talker or excessive disconnects from that endpoint.

Synchronization

Generally, the most common problem is a mismatch in synchronization sources between the endpoint and the DEFINITY MMCH. This typically causes low-level (Px64) handshake problems that can trigger the endpoint/MMCH to disconnect the call. The MCCH's timers are set to sufficiently high values so that, normally, the endpoint will timeout and disconnect first. If installed in a customer network, it is a good idea to perform an audit of the path synchronization is being supplied. If there are different clock sources between endpoints and the DEFINITY MMCH, some problems are sure to occur. The severity of these problems can range from a handshake failure every few seconds to one per day. Depending on the type of endpoint, this can cause the endpoint to disconnect or just freeze video until the main problem is resolved.

Specifically, PictureTel System 4000 endpoints seem to be the most sensitive to instability. The Avaya Vistium also disconnects fairly infrequently. Last, the CLI Rembrandt II VP freezes video and waits for framing to be recovered.

Network Configuration Concerns with Synchronization

When auditing a network for synchronization, avoid unnecessary hops. Thus, a switch providing star-configuration synchronization is preferred over a daisy-chain configuration. Additionally, if there are DEFINITY PBXs that have EPNs, synchronization should be provided to sub nodes from the same port network through which the PBX receives its synchronization. Passing synchronization through the PBX Expansion Interface adds an unnecessary hop to the path and creates another potential point of failure.

Expansion Interface Duplication

If a customer's network uses PBX EPNs with duplicated Expansion Interfaces, scheduled switching of the Expansion Interface links should be disabled on the PBX via **change system-parameters maintenance**. When scheduled maintenance runs and switches the links, there is a brief corruption of the data path. If endpoints have active calls when the switch occurs, this corruption of the data path causes Px64 handshake problems, which lead to the endpoints losing video source status, and sometimes disconnecting as described above. Disabling the EI switching is in the customer's best interest to prevent the disruption of the Px64 data stream. The customer will get the same level of alarm indications and maintenance on the EI links, regardless of the status of scheduled switching.

PRI D-Channel Backup

A somewhat unlikely source of call stability problems occur where the translations for PRI D-channel Backup between two non-MCU switches were incorrect. As an example, on switch A, DS1 1A10 was designated as the primary source, and on switch B, the corresponding DS1 was designated as the secondary source. When scheduled maintenance was run on the switch that had an active standby D-channel, an audit disconnected some calls using the link. The problem was corrected when the D-channel primary/secondary assignments matched.

Processor Duplication on the PBX

Do not enable the PI link switch on scheduled maintenance. This can cause link stability problems on the Accunet Bandwidth Controller (ABC).

Voice-Activated Switching Problems

Voice-activated switching on the DEFINITY MMCH does not follow the loudest talker. The MMCH queues all speaking parties and selects a new video broadcaster (the second-oldest speaking party) when the oldest speaking party has stopped talking. The new broadcaster will see the last speaker as its video. The system can also “learn” about the noise coming from an endpoint to help prevent false switches, adapting both to noise level and repetitive sounds such as a fan. This adaptation occurs over approximately 10 seconds.

No Switching, Full Motion Video

If a room is excessively noisy, the DEFINITY MMCH may receive sufficient audio signal to conclude that there is a speaker present. Use the Status Conference x form to determine if the MMCH thinks an endpoint is talking. The MMCH sets the `Ts` field to `t` for each endpoint if there is voice energy detected. This endpoint may have to mute when nobody at the site is speaking to allow the conference to proceed normally. Remind the customer that it may be necessary to mute if a side conversation is going on in the background, just as one would do in an audio conference. If the system does not switch broadcasters even after the current broadcaster has muted, check the conference administration using the **display conference X** command to ensure that the conference is in voice-activated mode. Also verify that parties who were speaking are valid video sources as described in the “Calls Terminate with No Video” section above.

The See-Me feature (MCV) can also cause VAS to “lock-up.” An endpoint can activate MCV to force their site to become the broadcaster. If they do not disable the feature when finished, the system remains in this mode indefinitely. The **status conference X** command shows that MCV is in effect by displaying `av` in the Video Status (Vs) column. Page 3 of the Status Conference X Endpoint Y form also has a `Broadcaster` field that indicates MCV is in effect with (SEE-ME) as the broadcaster. The same scenario can occur in a CHAIR or UCC-controlled conference with a designated broadcaster. In this situation the CHAIR/UCC has not released the designated broadcaster and returned to VAS mode. If there is a

UCC-designated broadcaster, **status conference X** indicates a Video Status of `u`. Also, for UCC rollcall the return video may appear to be stuck. Check the Video Status for an "`R`," indicating rollcall.

If none of the examples above appears to be the cause, and if the room was quiet, all speakers are valid video sources, the conference is voice-activated, and the speaker can be heard, then escalate the problem.

Video Never Switches to a Particular Party

Description

Verify that the endpoint is a valid video source as described in the "Calls Terminate with No Video" section above. If it is, then the audio from the endpoint may not have sufficient voice signal for the hardware to determine the parties at the endpoint are speaking. Check the `Talk` field on page three of the Status Conference X Endpoint Y form to see if the `talking bit` is `y`. Next, check the audio by standing adjacent to the microphone and speaking at a normal level.

Solution

If the audio is not muffled:

1. Use the **status conference** command to determine which port on the TN788B (VC board) is connected to this endpoint.
2. Check the VC (TN788B) board using the **test board xxyy long** command.
3. Drop the call.
4. Find another available port, then:
   a. Busyout the port to which the endpoint was connected.
   b. Make another call to the same conference. If the problem corrects itself, then the previous port may be bad. If there are other VC boards with sufficient available ports to replace calls on the current VC, then pull the board that has the bad endpoint on it (the **status conference** command displays the encoder port associated with the call). The system will automatically reestablish the VC connections without dropping the call. If this fixes the problem, then replace the board, as it has at least one bad port. Reseating the board may temporarily fix the problem due to the hard reset done to the board.

Audio Echo

Echo in conference calls, particularly those with large delay characteristics, is totally disruptive. When Voice Activated Switching is taken into account, the effects are disastrous. Various arrangements of the microphone(s) and room speaker(s) may be needed.

For some Avaya Vistium endpoints, if an external speaker is attached or was attached when the system was last rebooted, this endpoint will cause audio echo throughout the conference. First, isolate the offending endpoint by asking each endpoint to mute, one at a time, until the echo disappears.

If the input from an endpoint is located too close to the speakers of an endpoint, then acoustic echo is created. The microphone must be moved away from the speakers.

Normally, if any microphone in the room is moved relative to the speakers, that site will cause echo until the echo canceller in the codec retrains itself, some will require a manual reset. If a PictureTel keypad is configured with external microphones connected to the keypad, then the internal microphone and external microphone(s) “sing” to each other if the “ext mic” bat switch is set to “int mic” on the back of the keypad. In this configuration, VAS locked on that site, and the acoustic “singing” was inaudible.

Rate Adaptation

Because of a lack of a clear explanation in standards, sometimes endpoints do not work well with each other and the DEFINITY MMCH. The MMCH will only allow a conference to downgrade from 64kbps to 56 kbps operation on conferences that have the `Rate Adaptation` flag set to `y`.

When a downgrade does occur, information on the Status Conference form indicates the success or failure of the 64kbps-endpoints that are participants to properly rate adapt to 56kbps. As a general indication that the conference has rate adapted, the `Conference Transfer Rate` and `Effective Transfer Rate` fields show initial and current transfer rates, respectively. For each 64-kbps endpoint the column that indicates `Rate Adapt` shows an `n` if the endpoint did not follow the procedures as specified by the H.221. If an endpoint shows `y`, it did successfully rate adapt. If an endpoint shows `c`, it joined the conference at 56kbps.

Once the conference rate adapts, the endpoints that do not properly follow suit, will become audio-only endpoints. A conference will not rate adapt from 56 kbps back to 64 kbps until all endpoints disconnect from the conference and it idles.

The PictureTel 1000 Release 1.1C, PictureTel 6.01 software, and the Vistium 2.0 software successfully rate adapt with the MCU. External rate adaptation techniques used by VTEL and CLI are known to cause problems with the endpoint when used with this feature.

Endpoint or I-MUX in Loopback Mode

Some endpoints have a loopback enable feature. This makes DEFINITY MMCH data loopback at the MMCH when a connection is in progress. The loopback can be enabled prior to or during a connection.

The MMCH does not detect the loop and continues to VAS. In most scenarios, the switch occurs, but within a few seconds, the broadcaster's return video becomes its own image. Once the broadcaster stops speaking, the system "false" switches to an apparently random port that was not speaking.

Install DS1 CPE Loopback Jack (T1 Only)

Using the DS1 CPE Loopback Jack (apparatus code 700A, comcode 107988867), a technician can test the DS1 span between the system and the network interface point. The loopback jack is required when DC power appears at the interface to the ICSU. *The loopback jack isolates the ICSU from the DC power and properly loops the DC span power*.

NOTE:
The loopback jack operates with any vintage of TN767E (or later) or TN464F (or later) DS1 circuit packs and with G3V3 EDI Release 3 (or later) software. The loopback jack operates with the 120A2 (or later) Integrated Channel Service Unit (ICSU) only; *not* the 31xx series of Channel Service Units or other external CSUs or earlier ICSUs.

Loopback Jack Installation

Configurations Using a Smart Jack

The preferred location of the loopback jack is at the interface to the Smart Jack. This provides maximum coverage of CPE wiring when remote tests are run using the loopback jack. If the Smart Jack is not accessible, install the loopback jack at the extended demarcation point.

1. If there is no extended demarcation point, install the loopback jack directly at the network interface point as shown in Figure 5-11 on page 5-64.
2. If there is an extended demarcation point and the Smart Jack is not accessible, install the loopback jack as shown in Figure 5-12 on page 5-65.
3. If there is an extended demarcation point, but the Smart Jack is accessible, install the loopback jack as shown in Figure 5-13 on page 5-66.

Configurations Without a Smart Jack

1. Install the loopback jack at the point where the cabling from the ICSU plugs into the "dumb" block. If there is more than one "dumb" block, choose the one that is closest to the Interface Termination feed or the fiber MUX. This provides maximum coverage for loopback jack tests. Refer to Figure 5-14 on page 5-67 and Figure 5-15 on page 5-68.

Installation

1. To install the loopback jack, simply disconnect the RJ-48 (8-wide) connector (typically an H600-383 cable) at the appropriate interface point and connect the loopback jack in series with the DS1 span. See Figure 5-11 on page 5-64 through Figure 5-15 on page 5-68.
2. Plug the H600-383 cable from the ICSU into the female connector on the loopback jack.
3. Plug the male connector on the loopback jack cable into the network interface point.

   NOTE:
   Do not remove the loopback jack after installation. This is not a test tool and should always be available to remotely test a DS1 span.

Administration

1. At the management terminal, enter **change ds1 <location>**. The “location” is the DS1 interface circuit pack for which the loopback jack was installed.
2. Be sure the “near-end CSU type” is set to `integrated`.
3. On page 2 of the form, change the `supply CPE loopback jack power` field to `y`.

   NOTE:
   Setting this field to **y** informs the technician that a loopback jack is present on the facility. This allows a technician to determine that the facility is available for remote testing.

4. Enter **save translation** to save the new information.

DS1 Span Test

This test should only be performed after the DS1 circuit pack and the 120A2 (or later) ICSU have been successfully tested using appropriate maintenance procedures. The DS1 span test consists of 2 sequential parts. Each part provides a result indicating if there is a problem in the CPE wiring. CPE wiring may be considered problem-free only if the results of both parts are successful.

The first part of the span test powers-up the loopback jack and attempts to send a simple code from the DS1 board, through the wiring and loopback jack, and back to the DS1 board. Maintenance software waits about 10 seconds for the loopback jack to loop, sends the indication of the test results to the management terminal, and proceeds to the second part of the test.

The second part of the test sends the standard DS1 3-in-24 stress testing pattern from the DS1 board, through the loopback jack, and back to a bit error detector and counter on the DS1 board. The bit error rate counter may be examined at will via the management terminal, and provides the results of the second part of the test. The test remains in this state until it is terminated so that the CPE wiring may be bit error rate tested for as long as desired.

1. Busy out the DS1 circuit pack by entering **busyout board UUCCSS** (where UUCCSS is the cabinet, carrier, and slot number of the DS1 board).
2. At the management terminal, enter **change ds1 <location>** and verify the `near-end csu type` is set to `integrated`.
3. Change to page 2 of the DS1 administration form and confirm that the TX LBO field is 0dB. If not, record the current value and change it to 0dB for testing. Press Enter to implement the changes or press Cancel to change nothing.
4. Enter **test ds1-loop <location> cpe-loopback-jack**. This turns on simplex power to the loopback jack and waits about 20 seconds for any active DS1 facility alarms to clear. A “PASS” or “FAIL” displays on the terminal. This is the first of the 2 results. A “FAIL” indicates a fault is present in the wiring between the ICSU and the loopback jack. The loopback jack may also be faulty. A “PASS” only indicates that the loopback jack looped successfully, not that the test data contains no errors. If a “PASS” is obtained, continue with the following steps.

   NOTE:
   The loss of signal (LOS) alarm (demand test #138) is not processed during this test while the 3-in-24 pattern is active.

5. Enter **clear meas ds1 loop <location>** to clear the bit error count.
6. Enter **clear meas ds1 log <location>** to clear the performance measurement counts.
7. Enter **clear meas ds1 esf <location>** to clear the ESF error count.
8. Enter **list meas ds1 sum <location>** to display the bit error count. Refer to Table 5-7 for troubleshooting information.

Table 5-7. DS1 Span Troubleshooting

Displayed Field	Function	Indication
Test: cpe-loopback-jack	Pattern 3-in-24	The loopback jack test is active.
Synchronized	Y or N	If “y” displays, the DS1 circuit pack has synchronized to the looped 3-in-24 pattern and is accumulating a count of the bit errors detected in the pattern until the test has ended. If “n” displays, retry the test 5 times by ending the test per Step 11 and re-starting the test per Step 4. If the circuit pack never synchronizes, substantial bit errors in the 3-in-24 pattern are likely. This could be intermittent connections or a broken wire in a receive or transmit pair in the CPE wiring.
Bit Error Count	Cumulative count of detected errors	If there are no wiring problems, the counter remains at 0. A count that pegs at 65535 or continues to increment by several hundred to several thousand on each **list meas** command execution indicates intermittent or corroded connections, severe crosstalk, or impedance imbalances between the two conductors of the receive pair or the transmit pair. Wiring may need replacement. Note that “ESF error events” counter and the ESF performance counter summaries (“errored seconds”, “bursty errored seconds”, and so forth) will also increment. These counters are not used with the loopback jack tests. However, they will increment if errors are occurring. Counters should be cleared following the test.

9. Repeat Steps 5 through 8 as desired to observe bit error rate characteristics. Also, wait 1 to 10 minutes between Steps 5 through 7. One minute without errors translates to better than a 1 in 10 to the eighth error rate. Ten minutes without errors translates to better than a 1 in 10 to the ninth error rate.

10. If the test runs for 1 minute with an error count of 0, confirm that the 3-in-24 pattern error detector is operating properly by entering **test ds1-loop <location> inject-single-bit-error**. This causes the 3-in-24 pattern generator on the DS1 circuit pack to inject a single-bit error into the transmit pattern. A subsequent **list meas ds1 summary <location>** command displays the bit error count. If a count greater than 1 is displayed, replace the ICSU and retest. If the problem continues, replace the DS1 circuit pack.

11. Terminate the test by entering **test ds1-loop <location> end cpe-loopback-jack-test**. Wait about 30 seconds for the DS1 to re-frame on the incoming signal and clear DS1 facility alarms.

    Loopback termination fails under the following conditions:

    a. The span is still looped somewhere. This could be at the loopback jack, at the ICSU, or somewhere in the network. This state is indicated by a fail code of 1313. If the red LED on the loopback jack is on, replace the ICSU. Re-run the test and verify that the loopback test terminates properly. If not, replace the DS1 circuit pack and repeat the test.

    b. The DS1 cannot frame on the incoming span's signal after the loopback jack is powered down. This means that there is something wrong with the receive signal into the loopback jack from the "dumb" block or the Smart Jack. If the service provider successfully looped and tested the span, up to the Smart Jack, this condition isolates the problem to the wiring between the loopback jack and the Smart Jack. Refer to "Loopback Jack Fault Isolation Procedures" for information on how to proceed in this case. The test cannot be successfully terminated until a good signal is received. To properly terminate the test before a good receive signal is available, enter **reset board <location>**.

12. Restore the "TX LBO" field to the original value recorded in Step 2.
13. Release the DS1 circuit pack using the **release board UUCCSSpp** command.
14. Leave the loopback jack connected to the DS1 span.

Loopback Jack Fault Isolation Procedures

This section describes the possible DS1 configurations in which the loopback jack may be used. These configurations are: when the DS1 provider includes a Smart Jack, when no Smart Jack is provided at all, and when sites use fiber multiplexers. These configurations are separated into "Configurations Using a Smart Jack" and "Configurations Without a Smart Jack."

Configurations Using a Smart Jack

The addition of the loopback jack and the presence of a Smart Jack divides the DS1 span into 3 separate sections for fault isolation. These sections are shown in Figure 5-11 on page 5-64 through Figure 5-13 on page 5-66 for the different span configurations. They are:

Section 1: Between the 120A2 (or later) ICSU and the loopback jack.
Section 2: Between the loopback jack and the Smart Jack (network interface point).
Section 3: From the Smart Jack to the CO. It is necessary to contact the DS1 provider to run this test.

A problem can exist in 1 or more of the 3 sections. The field technician is responsible for finding and correcting problems in the first 2 sections. The DS1 service provider is responsible for finding and correcting problems in the third section. Testing is divided into 3 steps.

- Test customer premises wiring (section 1 in the following 3 figures) from the ICSU to the loopback jack as described in “DS1 Span Test.”
- Test the CO-to-network interface wiring (section 3 in Figure 5-11 on page 5-64) using the Smart Jack loopback (CO responsibility). Coordinate this test with the DS1 provider.
- Test the short length of customer premises wiring (section 2 in the following 3 figures) between the loopback jack and the Smart Jack. This can be done using a loopback that “overlaps” section 2 of the cable. Any of the following loopbacks can do this:

  a. The local ICSUs line loopback, which is typically activated, tested, and then deactivated by the DS1 service provider at the CO end.

  b. The local DS1 interface’s payload loopback, activated and tested by the DS1 service provider at the CO end.

  c. The far-end ICSU’s line loopback. This test is activated at the management terminal by entering **test ds1-loop <location> far-csu-loopback-test-begin**. The test is terminated by entering **test ds1-loop <location> end-loopback/span-test**. Bit error counts are examined as described in “DS1 Span Test.” This test method is the least preferable because it covers wiring that is not in the local portion of the span. This test only isolates problems to section 2 wiring if there are no problems in the wiring between the far-end CO and the far-end ICSU. Coordinate this test with the DS1 service provider.

  If any of the above tests (a, b, or c) fail, a problem is indicated in section 2 as long as the tests for section 1 and section 3 pass. Since section 2 includes the network interface point, it is necessary to work with the service provider to isolate the fault to the loopback jack cable, the “dumb” block, or the Smart Jack.

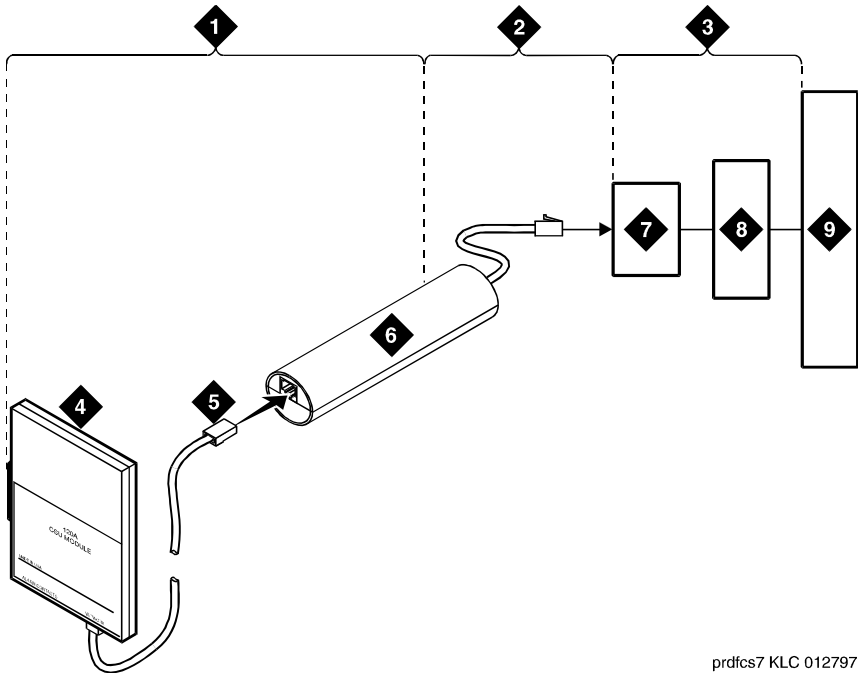

Figure Notes:

1. Span Section 1
2. Span Section 2
3. Span Section 3
4. 120A2 (or later) Integrated Channel Service Unit (ICSU)
5. RJ-48 to Network Interface (Up to 1000 Feet) (305 m)
6. Loopback Jack
7. Network Interface Smart Jack
8. Interface Termination or Fiber MUX
9. Central Office

Figure 5-11. Network Interface at Smart Jack

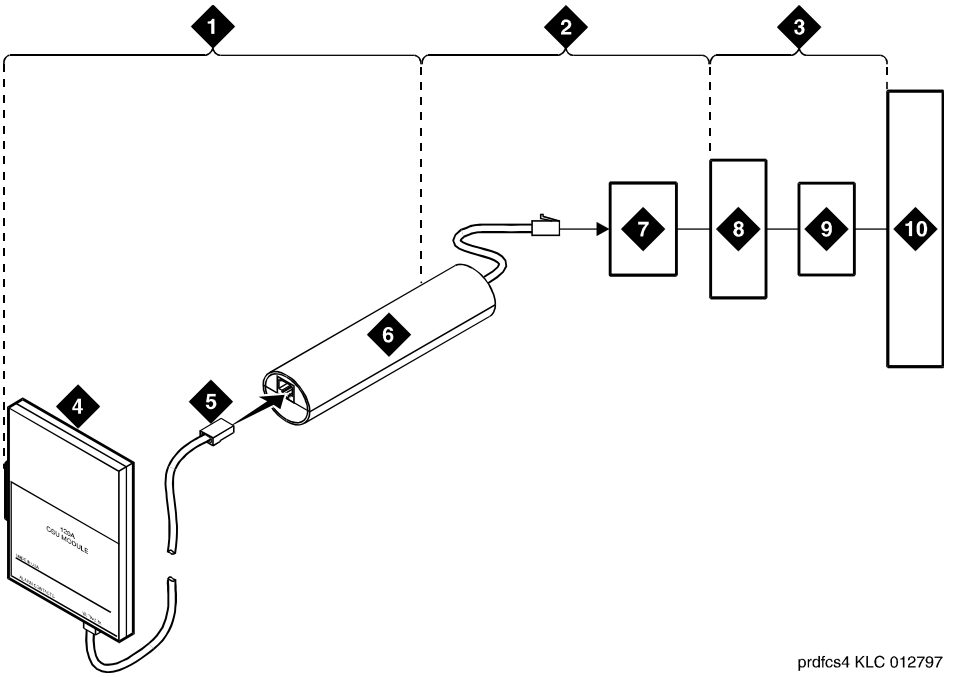

Figure Notes:

1. Span Section 1
2. Span Section 2
3. Span Section 3
4. 120A2 (or later) Integrated Channel Service Unit (ICSU)
5. RJ-48 to Network Interface (Up to 1000 Feet) (305 m)
6. Loopback Jack
7. “Dumb” Block (Extended Demarcation)
8. Network Interface Smart Jack
9. Interface Termination or Fiber MUX
10. Central Office

Figure 5-12. Network Interface at Extended Demarcation Point (Smart Jack Inaccessible)

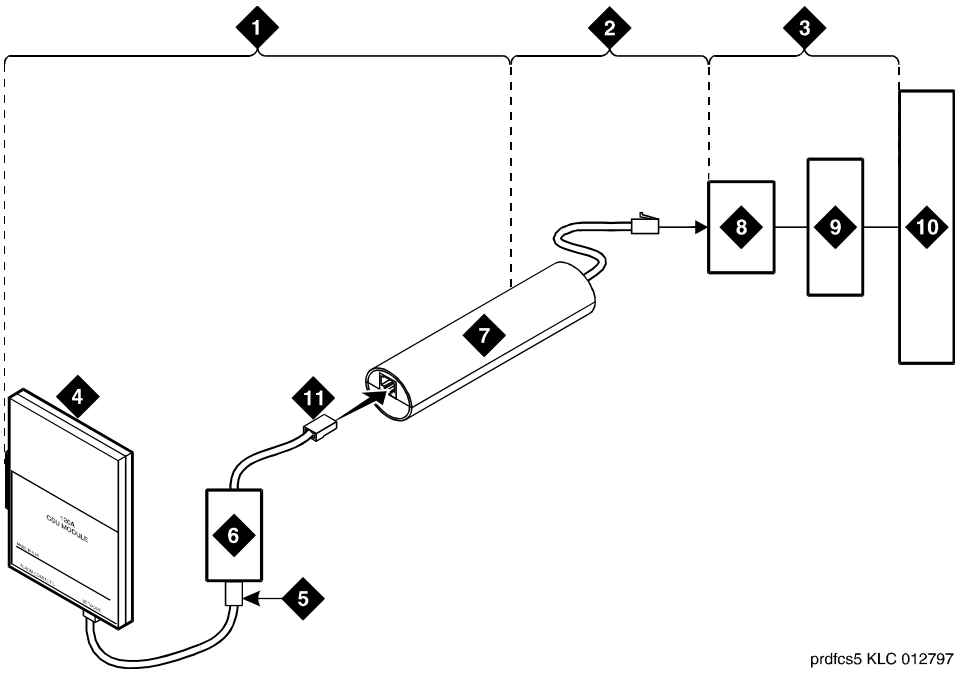

Figure Notes:

1. Span Section 1
2. Span Section 2
3. Span Section 3
4. 120A2 (or later) Integrated Channel Service Unit (ICSU)
5. RJ-48 to Network Interface (Up to 1000 Feet) (305 m)
6. “Dumb” Block (Extended Demarcation)
7. Loopback Jack
8. Network Interface Smart Jack
9. Interface Termination or Fiber MUX
10. Central Office
11. “Dumb” Block to Smart Jack RJ-48

Figure 5-13. Network Interface at Extended Demarcation Point (Smart Jack Accessible)

Configurations Without a Smart Jack

When the loopback jack is added to a span that does not contain a Smart Jack, the span is divided into 2 sections. See Figure 5-14 on page 5-67 and Figure 5-15 on page 5-68.

1. ICSU to the loopback jack.
2. Loopback jack to the Central Office (CO).

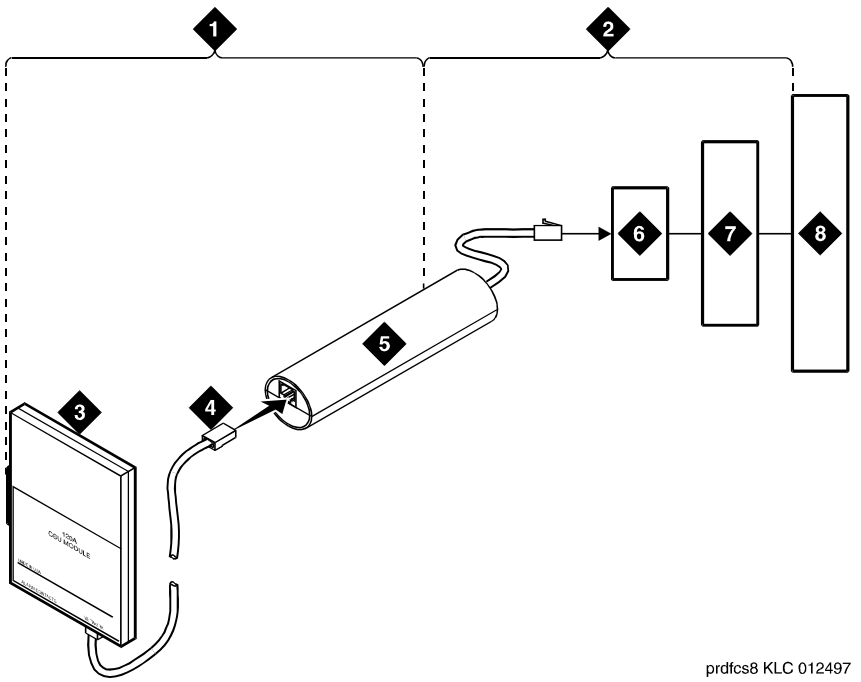

Figure Notes:

1. Span Section 1
2. Span Section 2
3. 120A2 (or later) Integrated Channel Service Unit (ICSU)
4. RJ-48 to Network Interface (Up to 1000 Feet) (305 m)
5. Loopback Jack
6. “Dumb” Block (Demarcation Point)
7. Interface Termination or Fiber MUX
8. Central Office

Figure 5-14. Network Interface at “Dumb” Block

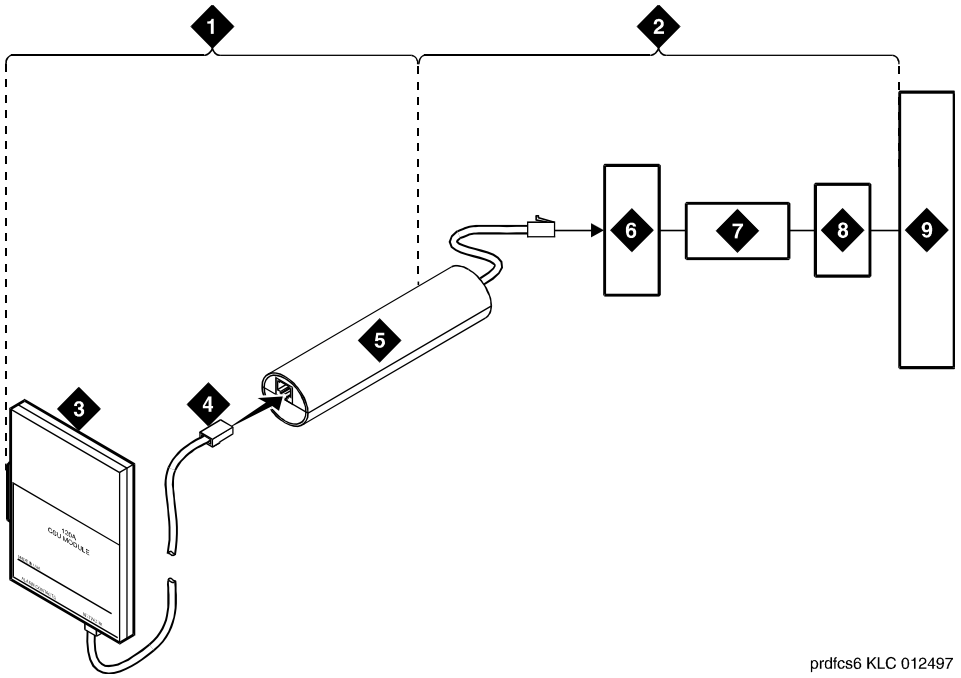

Figure Notes:

1. Span Section 1
2. Span Section 2
3. 120A2 (or later) Integrated Channel Service Unit (ICSU)
4. RJ-48 to Network Interface (Up to 1000 Feet) (305 m)
5. Loopback Jack
6. “Dumb” Block (Demarcation Point)
7. Repeater
8. Fiber MUX
9. Central Office

Figure 5-15. Network Interface at “Dumb” Block with Repeater Line to Fiber MUX

Section 2 includes the short cable from the loopback jack to the “dumb” block demarcation point (part of the loopback jack). This is the only portion o f section 2 that is part of customer premises wiring but is not covered in the loopback jack’s loopback path.

A problem can exist in 1 or both of the 2 sections. The field technician is responsible for finding and correcting problems in section 1 and the loopback cable portion of section 2. The DS1 service provider is responsible for finding and correcting problems in the majority of section 2. Testing is divided into 2 steps.

1. Test customer premises wiring (section 1 in Figure 5-14 on page 5-67) from the ICSU to the loopback jack as described in the “DS1 Span Test” section.
2. Test the loopback jack-to-”dumb” block and”dumb” block-to-CO wiring (section 2 in Figure 5-14 on page 5-67). This can be done using a loopback that “overlaps” the section of the span. Any of the following loopbacks can do this:

   a. The local ICSUs line loopback, which is typically activated, tested, and then deactivated by the DS1 service provider at the CO end.

   b. The local DS1 interface’s payload loopback, activated and tested by the DS1 service provider at the CO end.

   c. The far-end ICSU’s line loopback. This test is activated at the management terminal by entering **test ds1-loop <location> far-csu-loopback-test-begin**. The test is terminated by entering **test ds1-loop <location> end-loopback/span-test**. Bit error counts are examined as described in the “DS1 Span Test” section. This test only isolates problems to section 2 wiring if there are no problems in the wiring between the far-end CO and the far-end ICSU. Coordinate this test with the DS1 service provider.

   If any of the above tests (a, b, or c) fail, a problem is indicated in section 2. This could mean bad loopback jack -to-”dumb” block cabling, but is more likely to indicate a problem somewhere between the “dumb” block and the CO. This is the responsibility of the DS1 service provider. If the DS1 Span Test confirms that there are no problems in section 1, the technician should proceed as follows to avoid unnecessary dispatch.

   - Identify and contact the DS1 service provider
   - Inform the DS1 provider that loopback tests of the CPE wiring to the “dumb” block (section 1) showed no problems
   - If the far-end ICSU line loopback test failed, inform the DS1 provider
   - Request that the DS1 provider perform a loopback test of their portion of the section 2 wiring by sending someone out to loop section 2 back to the CO at the “dumb” block.

     If this test fails, the problem is in the service provider’s wiring.

     If the test passes, the problem is in the cable between the loopback jack and the “dumb” block. Replace the loopback jack.

Configurations Using Fiber Multiplexers

Use the loopback jack when customer premises DS1 wiring connects to an on-site fiber multiplexer (MUX) and allows wiring to the network interface point on the MUX to be remotely tested. This requires that ICSUs be used on DS1 wiring to the MUX.

Fiber MUXes can take the place of Interface termination feeds as shown in Figure 5-11 on page 5-64, Figure 5-12 on page 5-65, Figure 5-13 on page 5-66, and Figure 5-14 on page 5-67. Test these spans using the same procedures as metallic spans. Note the following points:

1. Fiber MUXes may have loopback capabilities that can be activated by the service provider from the CO end. These may loop the signal back to the CO or back to the DS1 board. If the MUX provides the equivalent of a line loopback on the “problem” DS1 facility, this may be activated following a successful loopback jack test and used to isolate problems to the wiring between the loopback jack and the MUX.
2. Be aware that there are installations that use repeatered metallic lines between the MUX and the “dumb” block. Theses lines require DC power for the repeaters and this DC power is present at the “dumb” block interface to the CPE equipment. *A loopback jack is required in this configuration to properly isolate and terminate the DC power*.

To check for the presence of DC, make the following 4 measurements at the network interface jack:

1. From Transmit Tip (T, Pin 5) to Receive Tip (T1, Pin 2)
2. From Transmit Ring (R, Pin 4) to Receive Ring (R1, Pin 4)
3. From Transmit Tip (T, Pin 5) to Transmit Ring (R, Pin 4)
4. From Receive Tip (T1, Pin 2) to Receive Ring (R1, Pin 4)

All measurements should read 0 (zero) volts DC. For pin numbers and pin designations, refer to *Integrated Channel Service Unit (ICSU) Installation and Operation*, 555-230-193.

Operating Characteristics

If a TN464F or TN767E and a 120A2 were installed in a system running pre-G3V3 software and the software is later upgraded to G3V3 Release 3 or later, reseat the DS1 circuit pack so that the ICSU administration fields will appear on the DS1 administration form.

ATM Tips

This section provides tips for DEFINITY ATM PNC when interfacing with the Cajun A500 ATM switch.

Initial LED inspection

Visually inspect the LEDs on both the TN230X (Table 5-8) and the ATM switch (Table 5-9) for a high-level status of the system.

Table 5-8. TN230X LED reference

LED color			Interpretation
Red	Green	Yellow	
Off	Off	Steady on	Normal state for active ATM EI board on PPN.
Off	Off	Off	Normal state for standby ATM EI board on PPN and EPN.
Off	Off	2 sec on / 2 sec off	Normal state for active PNC archangel ATM EI board on EPN.
-	-	100ms on / 100ms off	Loss of signal on the OC-3 fiber. Either the TN230X-receive (top) or TN230X-transmit (bottom) fibers are not working.
N/S	Fast blink	-	Running DSP diagnostics or downloading code to DSPs (typical during boot process).
-	Slow blink	-	Board insertion has not yet completed.
-	Steady on	-	Running maintenance tests. May appear to be blinking if several short tests are run one after another.
Steady on	-	-	Hardware alarm. Does not necessarily take the TN230X out of service, for example, if one of the 24 DSPs fails diagnostics.

Table 5-9 shows the LEDs on the A500 ATM and the meanings of the different states.

Table 5-9. A500 LED Quick Reference

Component	Label	Color	State	Meaning
Switch Processor Board	LK	Green	Intermittent blink	Normal state. Traffic is being sent or received over the Ethernet LAN link.
	RX	Green	Steady on	Normal state. Carrier is received over the Ethernet LAN link.
	DIAG	Green	Off	Normal state.

Continued on next page

Table 5-9. A500 LED Quick Reference — *Continued*

Component	Label	Color	State	Meaning
	NBOOT	Green	Off	Normal state.
	MGT	Green	Off	Normal state.
	RUN	Green	Steady on	Normal state. The switch processor is running.
	PWR	Green	Steady on	Normal state. The switch processor board is powered up.
	VOLT	Yellow	Off	Normal state
	TEMP	Yellow	Off	Normal state
	FAN	Yellow	Off	Normal state
	SYSERR	Yellow	Off	Normal state
	FAULT	Yellow	Off	Normal state
Switch Fabric Board	PWR	Green	Steady on	Normal state. The switch fabric board is powered up.
	FAULT	Yellow	Off	Normal state
Port Board	PWR	Green	Steady on	Normal state. The port board is powered up.
	FAULT	Yellow	Off	Normal state
Port Board Per Port	RX	Green	Off	No ATM cells are being received. This is not a normal state if the terminating port network is supposed to be up and running.
	RX	Green	Intermittent blink	ATM cells are being received intermittently. This is a typical pattern for DEFINITY if only Variable Bit Rate (VBR) signaling connections are present but no talk paths are up, perhaps because no calls are in progress.
	RX	Green	Steady on	ATM cells are being received frequently enough that the LED is lit constantly. This is a typical pattern for DEFINITY if Constant Bit Rate (CBR) talk paths are present.
	CD	Green	Off	Loss of carrier on the fiber. The A500 detects only if the A500-receive (right-hand) fiber is not working. The state of the A500-transmit (left hand) fiber is not detected.
	CD	Green	Steady on	Normal state. There is a optical carrier detected on the fiber from the TN230X.

Continued on next page

Table 5-9. A500 LED Quick Reference — *Continued*

Component	Label	Color	State	Meaning
	RPRD	Yellow	Off	Normal state
Power Supply	AC OK	Green	Steady on	Normal state. AC power is okay.
	DC OK	Green	Steady on	Normal state. DC power is okay.

Cajun A500 Diagnostics

The first step in any diagnostic procedure involving the A500 is to identify the OC-3 ports on the A500 that have DEFINITY port networks attached.

- Be aware that customers may use other ports on the A500 for applications unrelated to DEFINITY (LAN traffic or multimedia applications, for examples).
- These other applications may manifest themselves in the output of the troubleshooting commands you run on the A500. DEFINITY port networks must be identified by their A500 port numbers.

NOTE:
The following examples show DEFINITY port networks connected to A500 ports A1.1 and A1.2.

Has the A500 been installed and configured correctly?

Diagnostics

- Is the A500 powered up?
- If you are administering the A500 through a locally-attached console, is there a local console terminal connected to the console port on the A500 switch processor board with the correctly-pinned RS232 serial cable?
- If you are administering the A500 through telnet over the Ethernet, is there an 10BaseT Ethernet drop plugged into the Ethernet port on the A500 switch processor board? (Note that a few A500 commands are only permitted over the local console terminal.)
- Has the A500 been booted using either the recessed reset button or by turning the power off, then on again?
- Did the A500 go through a normal power up sequence, including testing all of the LEDs?
- Are any A500 yellow fault LEDs lit?

- Are the remaining A500 LEDs in a normal state (Table 5-9 on page 5-71 above)?
- Can you log into the A500 console using the diagnostic account **root** from the local console terminal or through telnet? (See Screen 5-7.)

```
                              A500 System Console
                             (c) 1997 Avaya Inc.

       login: root
    password: XXXXXX

********** New System Alarms **********
[1] Failed to fetch configuration files
  ****** Hit any key to continue *******

A500:
```

Screen 5-7. A500 login

5. Enter **status** at the `A500:` prompt.

   Screen 5-8 shows the output.

```
                    System Status

        A500 System, Ace_200.01
        Copyright 1996, 1997  Avaya Inc.
        Built Tue Dec 2 08:45:26 EST 1997
        by jdoe in view cm_ace_200
_____________________________________________________

System name              --
System time/date         -- Wednesday, December 3, 1997 15:59:07p
System Uptime            -- days 1,
                         -- hours 1,
                         -- minutes 1
Ethernet IP address      -- 123.1.123.12
Ethernet IP mask         -- 255.255.255.0
LEC IP address           -- 0.0.0.0
LEC IP mask              -- 0.0.0.0
IP default router        -- 123.1.123.123
TFTP server              -- 123.1.123.234
base MAC address         -- 12:34:56:78:9a:bc
ATM address              -- 45.0000.00000123456789abcdef.123456789abc.00
```

Screen 5-8. A500 screen output for status command

a. If the customer is providing an Ethernet connection to the A500, does the `Ethernet IP address` field have the customer-provided Internet address (configured using **admin address**)?

   If you are administering the A500 through a telnet connection over the Ethernet, this works, but it is worthwhile making sure the Ethernet address is correct.

b. If the customer is providing an Ethernet connection to the A500, does the `Ethernet IP mask` field have the customer-provided mask (typically something like `255.255.255.0`, although other values are valid), as configured with **admin address**?

c. If the customer is providing an Ethernet connection to the A500, does the `IP default router` field have the customer-provided Internet address, as configured using the **admin gateway** command?

d. If the customer is providing an Ethernet connection to the A500 and intends to upload to or download from a TFTP server, does the `TFTP server` field have the customer-provided Internet address, as configured using **tftp setserver**?

e. Does the `ATM address` field have the customer- or Avaya-provided network prefix (the first thirteen bytes and set by using **modify atmprefix**)?

DEFINITY Administration

Is ATM PNC administered correctly?

1. Enter **list atm pnc** on the DEFINITY SAT. The cabinet, carrier and slot positions of each administered TN230X board display as shown in Screen 5-9. Ensure that each board's physical location matches the display.

```
list atm pnc                                                    Page   1   SPE A
                                    ATM PNC
PNC                    A-PNC                        B-PNC
Connection #           LOC                          LOC

 1                     01B02
 2                     02A01
```

Screen 5-9. Screen output for list atm pnc command

Alternatively, use **list configuration UUC** (non-control cabinets) to confirm the PPN and EPN board locations and correct insertion.

2. Enter **status pnc** at the DEFINITY SAT to see which TN230X board is active in a duplicated system and how many alarms (if any) of each severity level have been logged for the board.

   Screen 5-10 on page 5-76 shows the output from this command.

```
status pnc
                            PORT NETWORK CONNECTIVITY

                                   Duplicated? no
                              Software Locked?
                               Standby Busied?

                            Standby Refreshed?
                         Interchange Disabled?

              A-PNC                                   B-PNC

              Mode: active                            Mode:
   State of Health:                        State of Health:
    Inter PN Index:                         Inter PN Index:

      Major Alarms: 0                         Major Alarms:
      Minor Alarms: 0                         Minor Alarms:
    Warning Alarms: 0                       Warning Alarms:
```

Screen 5-10. Screen output for status pnc command

3. Enter either **list configuration UUC** (for the carrier in which the ATM-EI packs reside) or **display circuit-packs *cabinet*** (non-control cabinet) at the DEFINITY SAT. This command tells you in more detail what boards are in which slots in each cabinet and carrier. Verify that the TN230Xs are physically located in the slots indicated on the display.

   - Screen 5-11 on page 5-77 shows the output for **display circuit-packs 1.**
   - Screen 5-12 on page 5-77 shows the output for **display circuit-packs 2**.

```
display circuit-packs 1
                              CIRCUIT PACKS
        Cabinet: 1                                Carrier: A
 Cabinet Layout: five-carrier              Carrier Type: processor

          *** PROCESSOR BOARDS NOT ADMINISTERABLE IN THIS SCREEN ***

                              CIRCUIT PACKS
        Cabinet: 1                                Carrier: B
 Cabinet Layout: five-carrier              Carrier Type: port

 Slot Code  Sfx  Name                      Slot Code  Sfx  Name
  00:                                       11: TN464  C   DS1 INTERFACE
  01:                                       12: TN464  F   DS1 INTERFACE
  02: TN2305     ATM PNC EI                 13: TN767  F   DS1 INTERFACE
  03:                                       14: TN767  C   DS1 INTERFACE
  04: TN754  C   DIGITAL LINE               15: TN760  D   TIE TRUNK
  05: TN746  B   ANALOG LINE                16: TN760  D   TIE TRUNK
  06: TN753      DID TRUNK                  17:
  07: TN771  D   MAINTENANCE/TEST           18:
  08: TN747  B   CO TRUNK                   19:
  09: TN556  B   BRI LINE                   20:
  10: TN767  C   DS1 INTERFACE

  '#' indicates circuit pack conflict.
```

Screen 5-11. Screen output for display circuit-packs 1

```
display circuit-packs 2
                              CIRCUIT PACKS

        Cabinet: 2                                Carrier: A
 Cabinet Layout: single-carrier-stack      Carrier Type: expansion-control

 Slot Code  Sfx  Name                      Slot Code  Sfx  Name
                                            11: TN746  B   ANALOG LINE
  01: TN2305     ATM PNC EI                 12:
  02:                                       13:
  03:                                       14:
  04:                                       15:
  05:                                       16:
  06:                                       17: TN754  C   DIGITAL LINE
  07:
  08:
  09: TN767  E   DS1 INTERFACE
  10: TN754  B   DIGITAL LINE

  '#' indicates circuit pack conflict.
```

Screen 5-12. Screen output for display circuit-packs 2

4. Enter **display atm pnc *portnetwork*** on the DEFINITY SAT.

   This display tells you the ATM addresses that have been administered for each TN230X. Verify that each ATM address (the concatenation of the five displayed hexadecimal fields) is correct and match those administered in the A500. See “A500 Administration” for more information.

Administered with hard coded PNNI routes

If the port networks are addressed using *hard coded PNNI routes* in the A500, the display looks like Screen 5-13 (pnc 1) and Screen 5-14 (pnc 2).

```
display atm pnc 1
                                    ATM PNC

                              Connection Number: 1
Location: 01B02
          Name:

Address Format: ICD ATM

           AFI: 47
           ICD: 0005
        HO-DSP: 80FFE1000000F2071B02
           ESI: 000000000000
           SEL: 00
```

Screen 5-13. Screen output for display atm pnc 1

```
display atm pnc 2
                                    ATM PNC

                              Connection Number: 2

      Location: 02A01
          Name:

Address Format: ICD ATM

           AFI: 47
           ICD: 0005
        HO-DSP: 80FFE1000000F2072A01
           ESI: 000000000000
           SEL: 00
```

Screen 5-14. Screen output for display atm pnc 2

Administered with End System Identifiers

If the port networks are addressed using End System Identifiers, the display looks like Screen 5-15 on page 5-79 (pnc 1) and Screen 5-16 on page 5-79 (pnc 2).

```
display atm pnc 1
                                    ATM PNC

                              Connection Number: 1

            A - PNC
      Location: 01B02
          Name:

Address Format: E.164 ATM Private

           AFI: 45
         E.164: 0001013035381053
        HO-DSP: 00000000
           ESI: 000000000011
           SEL: 00
```

Screen 5-15. Screen output for display atm pnc 1 with End System Identifiers

```
display atm pnc 2
                                    ATM PNC

                              Connection Number: 2

            A - PNC

      Location: 02A01
          Name:

Address Format: E.164 ATM Private

           AFI: 45
         E.164: 0001013035381053
        HO-DSP: 00000000
           ESI: 000000000012
           SEL: 00
```

Screen 5-16. Screen output for display atm pnc 2 with End System Identifiers

A500 Administration

Is the AX 500 administered correctly?

1. Enter **show signaling summary** on the A500 console. Screen 5-17 shows the screen output.

```
A500:show signaling summary

Port    loc VCI   SAP   IntType    Signaling   ILMI  SAP State     State
------  -------   ---   -------   -----------  ----  ------------  -----
A1.1      1       1     Network   UNI3.1       No    UP            UP
A1.2      2       2     Network   UNI3.1       No    UP            UP
```

Screen 5-17. Screen output for the show signaling summary command

a. If an A500 port to which a DEFINITY port network is attached is not listed in this display, it is likely that the port was administered incorrectly as having no UNI signaling (**admin link** command).

Ensure that fields listed have the values indicated below.

Field	Value
`IntType`	`Network` If `User`, links will not come up between the PPN and the EPN.
`Signaling`	`UNI3.1` If it is `UNI3.0`, links will not come up between the PPN and the EPN.
`ILMI`	Preferred value of is `No`, however this alone does not prevent links from coming up between the PPN and an EPN.
`SAP State`	May or may not be `UP`. Their values depend on more than just whether the port was marked as **UP**. (See highlighted data for SAP State in Screen 5-17 on page 5-79.)

2. If the A500 was administered using hard-coded PNNI routes to identify each endpoint, enter **show signaling routes** on the A500 console. Screen 5-18 shows the screen output.

```
A500:show signaling routes

Number of Local Static Routes Allowed: 30
Current number of Local Static Routes: 2

Address: 47.00.05.80.ff.e1.00.00.00.f2.07.2a.01.00.00.00.00.00.00.00
mask:152  cost:   0  node:self  port:A1.2 state:UP

Address: 47.00.05.80.ff.e1.00.00.00.f2.07.1b.02.00.00.00.00.00.00.00
mask:152  cost:   0  node:self  port:A1.1 state:UP
```

Screen 5-18. Screen output from the show signaling routes command

Check that the `Address` field (administered using **admin signaling route add**) matches those administered in DEFINITY.

3. If the A500 was administered using End System Identifiers, enter **show signaling esi** on the A500 console. Screen 5-19 on page 5-81 shows the output.

```
A500:show signaling esi
Addresses registered on A1.1
----------------------------
* 45.0001.01303538105300000000.000000000011.00

Addresses registered on A1.2
----------------------------
* 45.0001.01303538105300000000.000000000012.00

( * - configured )
```

Screen 5-19. Screen output A500: show signaling esi command

Check that `Addresses registered` (use **admin signaling esi add**) match those administered in DEFINITY.

- If an address or End System Identifier is missing or incorrect on the A500 port associated with the PPN, the EAL and PACL links will come up, but one-way talk paths may result. (The ATM network can route from the PPN to the EPN, which creates the bidirectional EAL and PACL signaling channels and one side of the talk path.)
- If an address or End System Identifier is missing or incorrect on the A500 port associated with the EPN, the links will not come up between the PPN and the EPN.

4. Enter **show sys interfaces** on the A500 console. Screen 5-20 on page 5-82 shows the screen output.

```
 Device    Oper      Admin     State      Type
           Status    Status
_____________________________________________________________
A1.1       up        up        present    STS_3c (MultiMode)
A1.2       up        up        present    STS_3c (MultiMode)
A1.3       down      down      present    STS_3c (MultiMode)
A1.4       down      down      present    STS_3c (MultiMode)
A1.5       down      down      present    STS_3c (MultiMode)
A1.6       down      down      present    STS_3c (MultiMode)
A1.7       down      down      present    STS_3c (MultiMode)
A1.8       down      down      present    STS_3c (MultiMode)
A2.1       down      down      present    STS_3c (MultiMode)
A2.2       down      down      present    STS_3c (MultiMode)
A2.3       down      down      present    STS_3c (MultiMode)
A2.4       down      down      present    STS_3c (MultiMode)
A2.5       down      down      present    STS_3c (MultiMode)
A2.6       down      down      present    STS_3c (MultiMode)
A2.7       down      down      present    STS_3c (MultiMode)
A2.8       down      down      present    STS_3c (MultiMode)
A3.1       down      down      invalid    STS_3c (MultiMode)
A3.2       down      down      invalid    STS_3c (MultiMode)
A3.3       down      down      invalid    STS_3c (MultiMode)
A3.4       down      down      invalid    STS_3c (MultiMode)
A3.5       down      down      invalid    STS_3c (MultiMode)
A3.6       down      down      invalid    STS_3c (MultiMode)
A3.7       down      down      invalid    STS_3c (MultiMode)
A3.8       down      down      invalid    STS_3c (MultiMode)
A4.1       down      down      invalid    STS_3c (MultiMode)
A4.2       down      down      invalid    STS_3c (MultiMode)
A4.3       down      down      invalid    STS_3c (MultiMode)
A4.4       down      down      invalid    STS_3c (MultiMode)
A4.5       down      down      invalid    STS_3c (MultiMode)
A4.6       down      down      invalid    STS_3c (MultiMode)
A4.7       down      down      invalid    STS_3c (MultiMode)
A4.8       down      down      invalid    STS_3c (MultiMode)
Self       up        up        present    PROPVIRTUAL
Self       up        up        present    SAR
E1.1       up        up        present    TenBaseT
```

Screen 5-20. A500 screen output for show sys interfaces command

- For each administered port used by a DEFINITY port network, the `Admin Status` should be `up` (use **admin up**).
- `Oper Status` is not pertinent to administration of the A500 and is discussed in a later section.
- `State` should be `present`, indicating that A500 port board insertion was successful. If `State` is `invalid`, then the A500 believes that the corresponding port board slot is empty or the port board is not recognized.

  It may be necessary to re-administer the A500 port boards. Refer to the *Cajun A500 Quick Reference* for further information.
- If `Admin Status` or `State` is incorrect, the links will not come up between the PPN and the EPN.

TN230X

Did the TN230X come up correctly?

1. Review the LED conditions for the TN230X:
   - Do the TN230X LEDs (see Table 5-8 on page 5-71) indicate a normal operational state (any of the following):
     - — Active in the PPN
     - — Standby in the PPN
     - — Archangel mode in the EPN
     - — Standby in the EPN?
2. If after board insertion or a demand reset:
   - Do the TN230X LEDs indicate that it is booting?
   - Do the TN230X LEDs indicate it is downloading its DSPs?
   - Do the TN230X LEDs indicate that board insertion has not yet occurred?
   - Do the TN230X LEDs indicate a maintenance alarm?
3. Enter **list configuration carrier *cabinetcarrier*** on the DEFINITY SAT. See Screen 5-21 on page 5-83 (1b) and Screen 5-22 on page 5-84 (2a) below.

```
list configuration carrier 1b

                              SYSTEM CONFIGURATION
Board                                                        Assigned Ports
Number    Board Type              Code     Vintage    u=unassigned t=tti p=psa

01B02     ATM PNC EI               TN2305  000001
01B04     DIGITAL LINE             TN754C  000002     u  u  u  u  u  u  u  u
01B05     ANALOG LINE              TN746B  000010     u  u  u  u  u  06 u  u
                                                      u  u  u  u  u  u  u  u
01B06     DID TRUNK                TN753   000021     u  u  u  u  u  u  u  u
01B07     MAINTENANCE/TEST         TN771D  000006     u  02 03 04
01B08     CO TRUNK                 TN747B  000018     u  u  u  u  u  u  u  u
01B09     BRI LINE                 TN556B  000003     u  u  u  u  u  u  u  u
                                                      u  u  u  u  u  u  u  u
                                                      u  u  u  u  u  u  u  u
01B10     DS1 INTERFACE            TN767C  000003     u  u  u  u  u  u  u  u
                                                      u  u  u  u  u  u  u  u
                                                      u  u  u  u  u  u  u  u
```

Screen 5-21. List configuration carrier 1b screen

```
list configuration carrier 2a

                              SYSTEM CONFIGURATION

Board                                                      Assigned Ports
Number   Board Type              Code     Vintage    u=unassigned t=tti p=psa

02A01    ATM PNC EI               TN2305  000001
02A09    DS1 INTERFACE            TN767E  000004     u  u  u  u  u  u  u  u
                                                     u  u  u  u  u  u  u  u
                                                     u  u  u  u  u  u  u  u
02A10    DIGITAL LINE             TN754B  000016     u  u  u  u  u  u  u  u
02A11    ANALOG LINE              TN746B  000010     01 u  u  u  u  u  u  u
                                                     u  u  u  u  u  u  u  u
02A17    DIGITAL LINE             TN754C  000002     u  u  u  u  u  u  u  u
```

Screen 5-22. List configuration carrier 2a screen

- The TN230X board should be shown in the correct slot.
- Fields should have values as indicated below:

Field	Value
`Board Type`	`ATM PNC EI`
`Vintage`	The TN230X vintage. If `Vintage` is `no board`, then either the board is in the incorrect slot or board insertion was not completed correctly.

4. If the TN230X is inserted and shows a vintage number, enter **test board *cabinetcarrierslot*** for this board on the DEFINITY SAT, as shown in Screen 5-23 (1b02) and Screen 5-24 (2a01).

```
test board 1b02

                                TEST RESULTS

  Port      Maintenance Name  Alt. Name Test No. Result            Error Code

  01B02     ATM-EI                      316      PASS
  01B02     ATM-EI                      598      PASS
  01B02     ATM-EI                      1258     PASS
  01B02     ATM-EI                      241      PASS
  01B02     ATM-EI                      304      PASS
  01B02     ATM-EI                      1259     PASS
```

Screen 5-23. Screen output for the test board 1b02 command

```
test board 2a01

                                TEST RESULTS

  Port      Maintenance Name  Alt. Name Test No. Result            Error Code

  02A01     ATM-EI                      316      PASS
  02A01     ATM-EI                      598      PASS
  02A01     ATM-EI                      1258     PASS
  02A01     ATM-EI                      241      PASS
  02A01     ATM-EI                      304      PASS
  02A01     ATM-EI                      1259     PASS
```

Screen 5-24. Screen output for the test board 2a01 command

- The `Result` should be `PASS` for each test number. If the any of the tests fail, refer to "ATM-BCH (ATM B-Channel Trunk)".

Possible Causes

1. The TN230X board is in a slot different from the DEFINITY administration.
2. The TN230X did not complete board insertion.

Physical Layer

Is there an optical signal between the TN230X and the A500?

1. Does the TN230X's yellow LED flash 100ms on/100ms off, indicating a loss of signal on the fiber? The TN230X detects continuity problems with either the Transmit (bottom) or the Receive (top) fibers.
2. Is the A500 port's CD LED off, indicating a loss of signal on the fiber? The A500 detects continuity problems only with the Receive (right-hand) fiber; the state of the Transmit (left-hand) fiber is not detected.
3. Type **show signaling summary** on the A500 console. Screen 5-25 shows the output.

```
A500:show signaling summary

Port     loc VCI   SAP   IntType    Signaling   ILMI  SAP State     State
------   -------   ---   -------   -----------  ----  ------------  -----
A1.1       1       1     Network   UNI3.1       No    UP            UP
A1.2       2       2     Network   UNI3.1       No    UP            UP
```

Screen 5-25. A500: show signaling summary screen

Ensure that the fields have the values indicated below.

`SAP State`	`Up` If it is `PHY_DOWN` or `DOWN`, then there is probably a loss of signal on the port in question. This command detects a continuity problem only with the Receive (right-hand) fiber; it does not detect the state of the Transmit (left-hand) fiber.
`State`	The value of may be `UP` or `DOWN`, depending on the administration of the port. It may be necessary to re-administer the A500 port boards. Refer to the *Cajun A500 Quick Reference* for further information.

4. Enter **show system interfaces** on the A500 console. Screen 5-26 on page 5-87 shows an example of the screen output.

```
Device     Oper      Admin     State      Type
           Status    Status
_____________________________________________________________
A1.1       up        up        present    STS_3c (MultiMode)
A1.2       up        up        present    STS_3c (MultiMode)
A1.3       down      down      present    STS_3c (MultiMode)
A1.4       down      down      present    STS_3c (MultiMode)
A1.5       down      down      present    STS_3c (MultiMode)
A1.6       down      down      present    STS_3c (MultiMode)
A1.7       down      down      present    STS_3c (MultiMode)
A1.8       down      down      present    STS_3c (MultiMode)
A2.1       down      down      present    STS_3c (MultiMode)
A2.2       down      down      present    STS_3c (MultiMode)
A2.3       down      down      present    STS_3c (MultiMode)
A2.4       down      down      present    STS_3c (MultiMode)
A2.5       down      down      present    STS_3c (MultiMode)
A2.6       down      down      present    STS_3c (MultiMode)
A2.7       down      down      present    STS_3c (MultiMode)
A2.8       down      down      present    STS_3c (MultiMode)
A3.1       down      down      invalid    STS_3c (MultiMode)
A3.2       down      down      invalid    STS_3c (MultiMode)
A3.3       down      down      invalid    STS_3c (MultiMode)
A3.4       down      down      invalid    STS_3c (MultiMode)
A3.5       down      down      invalid    STS_3c (MultiMode)
A3.6       down      down      invalid    STS_3c (MultiMode)
A3.7       down      down      invalid    STS_3c (MultiMode)
A3.8       down      down      invalid    STS_3c (MultiMode)
A4.1       down      down      invalid    STS_3c (MultiMode)
A4.2       down      down      invalid    STS_3c (MultiMode)
A4.3       down      down      invalid    STS_3c (MultiMode)
A4.4       down      down      invalid    STS_3c (MultiMode)
A4.5       down      down      invalid    STS_3c (MultiMode)
A4.6       down      down      invalid    STS_3c (MultiMode)
A4.7       down      down      invalid    STS_3c (MultiMode)
A4.8       down      down      invalid    STS_3c (MultiMode)
Self       up        up        present    PROPVIRTUAL
Self       up        up        present    SAR
E1.1       up        up        present    TenBaseT
```

Screen 5-26. A500: show sys interfaces

— `Oper Status` should be `up`. If it is `down`, there is likely a loss of signal on the port in question (`State` of `present`), or the A500 does not recognize the port board (`State` of `invalid`). This command detects a continuity problem only with the Receive (right-hand) fiber; it does not detect the state of the Transmit (left-hand) fiber.

Possible Causes

- The fiber is disconnected from the A500 and/or the TN230Xs.
- The Transmit and Receive fibers are swapped at the A500 or the TN230X (but not both).
- There is a break in the fiber.
- The TN230X is not transmitting a carrier (not inserted, not powered, or not administered). See "ATM-BCH (ATM B-Channel Trunk)".
- Hardware safety interlocks on optical transceivers may cut transmitter power if no carrier is received, so lack of a receive carrier could indicate a transmitter problem at the same end.
- The A500 does not recognize that there is a port board in the slot. It may be necessary to re-administer the A500 port boards. Refer to the *Cajun A500 Quick Reference* for further information.

Recommended Action

1. Plug in, swap, repair, or replace the fiber as necessary.
2. Verify that the port board is inserted.

SONET Layer

Are SONET frames reaching the A500?

Is the A500 port's green RX LED solid off, indicating no cell traffic?

1. Enter **show stats sonet *port*** on the A500 console. Screen 5-27 shows the screen output.

NOTE:
The following examples point to port A1.2 as the port of interest.

```
 Sonet per Port Statistics
--------------------------------

 Receive Cell Count:      80654
 Transmit Cell Count:     79555

 Section Level Bit Err:   1
 Line Bit Err:            1
 Line FEB Err:            168
 Path Bit Err:            1
 Path FEB Err:            98
 Correctable HCS Err:     0
 Uncorrectable HCS Err:   0
 Loss of Frame Err:       1
 Loss of Signal Err:      0
 Out of Frame Err:        0

 Path Signal Label:       19
```

Screen 5-27. A500: show stats sonet a1.2 screen

Ensure that the fields have the values indicated below.

`Receive Cell Count`

Each field's values should be increasing if the TN230X is actively sending and receiving cells with the A500. (Even if a TN230X did not achieve board insertion, it will still try to talk to the A500.)

`Transmit Cell Count`

If neither field is increasing, the A500 port may have been marked down using the **admin down** command. Use **show system interfaces** to verify that the `Admin Status` is `up`.

If the `Receive Cell Count` is increasing but the `Transmit Cell Count` is not increasing, this may be because the port was administered with no UNI signaling (**admin link**). Use **show signaling summary** to ensure that `Signaling` is `UNI3.1`.

The error counters may not be zero, but should not be large compared to the receive and transmit cell counters. If the counters are large and increasing, check the fiber integrity. Ensure the fiber pairs are securely plugged into the TN230X and the A500.

If the fiber has been pulled and reinserted as part of fault diagnosis, the non-zero `Loss of Signal Err` counter may be correct.

Q.SAAL (Data Link) Layer

Are ATM signaling messages reaching A500 Call Control?

1. Enter **show signaling stats *port* qsaal** on the A500 console. Screen 5-28 on page 5-90 shows the screen output.

```
A500: show signaling stats a1.2 qsaal

------------------------Q.SAAL Statistics------------------------
Port A1.2:
----------
Type:  UNI3.1
VPI: 0x00, VCI: 0x05
                        Tx          Rx
                    --------    --------
BGN PDUs:                  0           1
BGAK PDUs:                 1           0
END PDUs:                  0           0
ENDAK PDUs:                0           0
RS PDUs:                   0           0
RSAK PDUs:                 0           0
BGREJ PDUs:                0           0
SD PDUs:                  81          78
SDP PDUs:           Supported only for UNI 3.0
ER PDUs:                   0           0
POLL PDUs:              6259        5720
STAT PDUs:              5720        6259
USTAT PDUs:                0           0
ERAK PDUs:                 0           0
Discarded PDUs:            0           0
Errored PDUs:              0           0
Buffers in use:            0           0
High buffer mark:          3           0
```

Screen 5-28. A500: show signaling stats a1.2 qsaal screen

NOTE:
If there is no connection between the TN230X and the A500 at the Q.SAAL protocol layer, then no report is displayed.

— If `Port A1.2` (or the port of interest) is `not configured for UNI signaling`, then the port was administered for no UNI signaling (**admin link** command). Use the **show signaling summary** command to verify that `Signaling` is `UNI3.1`.

— The `Supported only for UNI 3.0` line for the `SDP PDUs:` field means that the port was administered for UNI3.0 signaling (**admin link** command). Use the **show signaling summary** command to verify that `Signaling` is `UNI3.1`.

— The `POLL PDUs` and `STAT PDUs` counters should be increasing if the TN230X is actively sending and receiving Q.SAAL Protocol Data Units with the A500. This occurs even if the TN230X did not achieve board insertion.

Q.93B (Network) Layer

Are connection requests being received by A500 Call Control?

1. Enter **show signaling stats *port* q93b** (or the port of interest) on the A500 console. Screen 5-29 shows the screen output.

```
A500:show signaling stats a1.2 q93b

-------------------------Q.93B Statistics------------------------
Port A1.2:
----------
                        Tx          Rx
                    --------    --------
Connect Messages:         15          18
Setup Messages:           18          15
Release Messages:         17          13
Rel Cmplt Messages:       13          17
Add Party Messages:        0           0
Add Party Acks:            0           0
Add Party Rejects:         0           0
Drop Party Messages:       0           0
Drop Party Acks:           0           0
Last Cause Code:          31          31
Last Diag Code:      0. 0. 0    71. 0.29
Total Connections:        33
Current Connections:       3
```

Screen 5-29. A500:show signaling stats A1.2 q93b

NOTE:
If there is no connection between the TN230X and the A500 at the Q93B protocol layer, then no report displays.

Ensure that the fields have the values indicated below.

`Port A1.2` (or the port of interest)	If this field is `not configured for UNI signaling`, then the port was administered for no UNI signaling (**admin link**). Use **show signaling summary** to verify that `Signaling` is `UNI3.1`.

`Connect Messages`
`Setup Messages`
`Release Messages`
	These counters should be non-zero if the A500 is handling Q.93B protocol layer messages sent by the PPN and EPN. They may not increase during troubleshooting unless calls are being made, since the PPN initially sets up control connections to the PPN and then sets up talk path connections as needed.

2. If connections are being rejected, the `Last Cause Code` may give a clue to why. The Cause Code (Table 5-10 on page 5-93 below) indicating the error may be on the PPN port even though the EPN port is the one misbehaving, and vice versa.

Enter **show signaling cause *causecode*** on the A500 console. Screen 5-30 shows the screen output for this command.

```
A500:show signaling cause 31

Cause 31: Normal, unspecified
```

Screen 5-30. A500:show signaling cause 31

3. At the DEFINITY SAT type **display errors** and press Enter.

   Set the `Error List` to **errors** and `Category` to **PNC** on the input screen (Screen 5-31) and press Enter to display any Cause Codes (see Table 5-10 on page 5-93 below) returned from the ATM network to a TN230X on the PPN (and to a TN230X on an EPN). This is successful only if the links between the PPN and the EPN remain up so that the message from the EPN is logged.

   Refer to "ATM-BCH (ATM B-Channel Trunk)" for detailed information regarding Cause Codes for this Maintenance Object.

```
display errors                                        Page   1 of   1   SPE A
                                   ERROR REPORT

      The following options control which errors will be displayed.
         ERROR TYPES

            Error Type:                Error List: errors


         REPORT PERIOD

            Interval: a      From:   /  /  :   To:   /  /  :

         EQUIPMENT TYPE ( Choose only one, if any, of the following )

                              Cabinet:
                         Port Network:
                         Board Number:
                                 Port:
                             Category: PNC
                            Extension:
               Trunk ( group/member ):    /
```

Screen 5-31. DEFINITY display errors Input Screen

Screen 5-32 shows the screen output for **display errors**.

```
display errors                                                Page   9   SPE A

                              HARDWARE ERROR REPORT

Port      Mtce     Alt     Err   Aux     First       Last      Err Err Rt/ Al Ac
          Name     Name    Type  Data    Occur       Occur     Cnt Rt  Hr  St

AT01A     ATM-NTWK         41    1     11/12/16:59 12/09/15:10 14  0   0   n  n
AT01A     ATM-NTWK         31    0     11/13/18:27 11/20/20:02 5   0   0   n  n
AT02A     ATM-NTWK         0     0     11/13/18:45 11/13/18:45 1   0   0   n  n
AT02A     ATM-NTWK         31    0     11/15/14:40 11/15/14:41 2   120 0   n  n
AT01B     ATM-NTWK         31    0     11/16/17:39 11/16/17:39 1   0   0   n  n
AT01A     ATM-NTWK         3     1     11/16/18:19 11/26/13:13 12  0   0   n  n
```

Screen 5-32. Screen output for display errors command

In this example the errors that have `ATM-NTWK` for `Name` and `1` for `Data` indicate an error returned to the TN230X from the ATM network. In this case, `Type` indicates the Cause Code returned by the ATM network (see Table 5-10 below). In the example above, two Cause Codes (41 and 3) are reported from the ATM network. For more information about these Cause Codes and repair information see "ATM-SGRP (ATM Signaling Group)".

Table 5-10. Observed Cause Codes

Cause Code	Definition	Observed Cause
3	No route to destination	The ATM addresses administered in the ATM switch (**show signaling routes** or **show signaling esi**) or in DEFINITY (**display atm pnc**) are incorrect.
31	Normal, unspecified	This is a normal return.
41	Temporary failure	This "try again later" Cause Code has been observed when the source of the problem is on another port (for example, a routing problem on another port that displays Cause Code 3).
47	Resources unavailable, unspecified	DEFINITY call volume is too high for the available resources in the ATM network.
63	Service or option unavailable, unspecified	DEFINITY call volume is too high for the available resources in the ATM network.

ATM Call Control

Are ATM signaling connections being setup to A500 Call Control?

1. Enter **show switch circuittable** on the A500 console. Screen 5-33 shows the screen output.

```
A500:show switch circuittable

 ____________________________________________________________
|    Input      |    Output     |       Connection          |
| port vpi  vci| port vpi  vci| type class  parameters    |
|_____________|_____________|___________________________|

  A1.1   0    5  Self   0    1  pp   UBR    ppd on
  A1.1   0   32  A1.2   0   32  pp   VBRnrt pcr=5729  /scr=5729  /mbs=17187
  A1.1   0   35  A1.2   0   35  pmp  CBR    pcr=173

  A1.2   0    5  Self   0    2  pp   UBR    ppd on
  A1.2   0   32  A1.1   0   32  pp   VBRnrt pcr=5729  /scr=5729  /mbs=17187
  A1.2   0   34  A1.1   0   34  pmp  CBR    pcr=173

  Self   0    1  A1.1   0    5  pp   UBR    ppd on
  Self   0    2  A1.2   0    5  pp   UBR    ppd on
_____________________________________________________________
```

Screen 5-33. A500: show switch circuittable screen

- The `pp UBR` virtual circuits between A500 ports `A1.1` (PPN) and `Self` (A500) and between `A1.2` (EPN) and `Self` (A500) are ATM signaling channels between the port network and the A500.
- They are used to request connection setups and releases to other end points such as another port network.
- These are established by each TN230X when it comes up, independent of DEFINITY Call Processing.
- Other UBR virtual circuits may exist between A500 ports that are not associated with DEFINITY port networks and may be signaling channels for other applications (for example, data network traffic).

CaPro Layer

Are control channels being established from the PPN to the EPN?

Diagnostics

- Do you get a dial tone on a set on the port network in question?
- Can you ring a set on the EPN dialing from the PPN and vice versa?

1. Enter **list sys-link** on the DEFINITY SAT. Screen 5-34 shows the output.

```
list sys-link
                              SYSTEM LINKS INFORMATION

Location  Link Type/    State   Current      Faulted    Last Fault
          Channel               Path         Path       Recorded

02A0101   EAL           up      present      present    12/06/1997 16:20
01B0202   PACL          up      present      present    12/06/1997 16:17
02A0102   PACL          up      present      present    12/06/1997 16:20
```

Screen 5-34. List sys-link screen

Ensure that the fields have the values indicated below.

`Link Type/ Channel`	One `PACL` to each TN230X in either a PPN or an EPN, and one `EAL` to each TN230X in an EPN.
`State`	`up`

2. Enter **show switch circuittable** on the A500 console. Screen 5-35 shows the output.

```
A500:show switch circuit
 ____________________________________________________________
|    Input      |    Output     |       Connection          |
| port vpi  vci| port vpi  vci| type class  parameters     |
|_____________|_____________|___________________________|

  A1.1   0    5  Self   0    1  pp   UBR    ppd on
  A1.1   0   32  A1.2   0   32  pp   VBRnrt pcr=5729  /scr=5729  /mbs=17187
  A1.1   0   35  A1.2   0   35  pmp  CBR    pcr=173

  A1.2   0    5  Self   0    2  pp   UBR    ppd on
  A1.2   0   32  A1.1   0   32  pp   VBRnrt pcr=5729  /scr=5729  /mbs=17187
  A1.2   0   34  A1.1   0   34  pmp  CBR    pcr=173

  Self   0    1  A1.1   0    5  pp   UBR    ppd on
  Self   0    2  A1.2   0    5  pp   UBR    ppd on
____________________________________________________________
```

Screen 5-35. A500: show switch circuit screen

- The pp VBRnrt (Variable Bit Rate) virtual circuits between A500 ports A1.1 (PPN) and A1.2 (EPN) are used for signaling between the PPN and each EPN.
- These are established once upon initialization under control of DEFINITY Call Processing. They represent the ATM Control Link (ACL) and Expansion Archangel Link (EAL).
- VBRnrt virtual circuits are also be used for ISDN channels between DEFINITY Server port networks.
- Other VBRnrt virtual circuits may exist between A500 ports that are not associated with DEFINITY port networks. A common use of VBRnrt circuits is multimedia and video-conferencing systems.

CaPro Layer

Are talk paths being established between port networks?

Diagnostics

- Can you talk both ways on a set on one port network dialed from another port network and vice versa?

1. Enter **show switch circuit** on the A500 console. Screen 5-36 shows the screen output.

```
A500:show switch circuit
 ____________________________________________________________
|    Input      |    Output     |       Connection          |
| port vpi  vci| port vpi  vci| type class  parameters     |
|_______________|_______________|___________________________|

  A1.1   0    5  Self   0    1  pp   UBR    ppd on
  A1.1   0   32  A1.2   0   32  pp   VBRnrt pcr=5729  /scr=5729  /mbs=17187
  A1.1   0   35  A1.2   0   35  pmp  CBR    pcr=173

  A1.2   0    5  Self   0    2  pp   UBR    ppd on
  A1.2   0   32  A1.1   0   32  pp   VBRnrt pcr=5729  /scr=5729  /mbs=17187
  A1.2   0   34  A1.1   0   34  pmp  CBR    pcr=173

  Self   0    1  A1.1   0    5  pp   UBR    ppd on
  Self   0    2  A1.2   0    5  pp   UBR    ppd on
_____________________________________________________________
```

Screen 5-36. A500:show switch circuit screen

— The pmp CBR (Constant Bit Rate) virtual circuits (VCs) between A500 port A1.1 (PPN) and A500 port A1.2 (EPN) are used for talk paths between port networks (PPN to EPN, EPN to PPN, or EPN to EPN).

— They are established when calls are first setup between port networks. Each virtual circuit represents one party of a complete multiparty talk path.

— The report above shows one complete talk path: one unidirectional point-to-multipoint virtual circuit from A1.1 to A1.2, and another from A1.2 to A1.1.

— These virtual circuits may persist beyond the duration of a phone call. The DEFINITY Call Processing software saves virtual circuits for a few seconds after the end stations have hung up in case the VC can be used again for another call between the same two port networks.

— In early version of the Release 2 A500 firmware, these connections incorrectly identified as `pmp UBR`.

— There may be other CBR virtual circuits between A500 ports that are not associated with DEFINITY port networks. A common CBR application is Circuit Emulation, in which T-1, T-3, etc. circuits are carried over ATM.

Unusual ATM trouble conditions

There are a few failure modes in the DEFINITY/A500 combination that are difficult to diagnose. One example is that you can't make a completely successful call, even though most indications from DEFINITY and the A500 look good. This section documents some steps may help diagnose the following failure modes:

- Incorrectly typed or omitted EPN Route or End System Identifier (A500)
- Swapped Routes, End System Identifiers, or Fiber between a PPN and an EPN
- Swapped Routes, End System Identifiers, or Fiber between A and B side TN230Xs on an EPN
- Swapped Routes, End System Identifiers, or Fiber between two EPNs

Incorrectly typed or omitted EPN Route or End System Identifier (A500)

Symptoms

Talk paths are one-way, from the PPN to the EPN: you can hear tones from the PPN end station to the EPN end station but not vice versa. Because the signaling channels are bidirectional virtual circuits (VCs) established from the PPN to the EPN, these can be routed correctly and come up just fine. Talk paths are two unidirectional virtual circuits, so a single call has one VC from the PPN to the EPN (which is routed correctly) and one VC from the EPN to the PPN (which cannot be routed).

Diagnostics

1. At the A500 type **show signaling routes** or **show signaling esi** to check the ATM addresses.
2. Use **show signaling stats *port* q93b** on the EPN port and look for Cause Code 3 (`No route to destination`).

Action

1. Correct the ATM address translations in the A500.

Swapped Routes, End System Identifiers, or Fiber between a PPN and an EPN

Symptoms

- An incorrectly-connected EPN TN230X does not complete board insertion.
- Dial tone is present on end stations on the PPN and on correctly-connected EPNs, but no dial tone is present on the affected EPN end stations.
- Calls cannot be made between the PPN and the correctly connected EPNs, because talk paths cannot be routed correctly.

Diagnostics

1. The **show switch circuittable** command on the A500 shows VBR control channels from the A500 port intended for the incorrectly-connected EPN (but actually connected logically or physically to the PPN) that should not exist.

Action

1. Correct the ATM addresses (or swap fibers) on the A500 between the incorrectly-connected PPN and EPN.

Swapped Routes, End System Identifiers, or Fiber between two EPNs

Symptoms

- All TN230Xs complete board insertion.
- The PPN cold starts both incorrectly connected EPNs as usual.
- Both EPNs log many `WRONG BOARD INSERTED` errors (use **list configuration all** or **display circuit-packs <*carrier*>**) providing the EPNs actually do have different boards configured in the same slots.
- Some end stations may work if they are connected to the correct board in the same slot on both EPNs. Otherwise, end stations on the PPN have dial tone, while end stations on the EPNs do not.
- All A500 diagnostic commands look good.

Diagnostics

1. Check log for `WRONG BOARD INSERTED` errors (use **list configuration all** or **display circuit-packs <*carrier*>**).

Action

1. Correct the ATM addresses (or swap fibers) on the A500 between the incorrectly connected EPNs.

Swapped Routes, End System Identifiers, or Fiber between A and B side TN230Xs on an EPN

Symptoms

- The PPN establishes links to what it thinks is the active TN230X on the EPN.
- As normal, it reboots this TN230X, and when complete, it resets the EPN. When this happens, the active (instead of the standby) TN230X reboots, dropping the links.
- To recover, the PPN re-establishes links to what it thinks is the active TN230X and the cycle repeats indefinitely.

Diagnostics

1. The **status pnc** command on the DEFINITY SAT shows both the A-side and B-side `State of Health` field as `partially functional`.

Action

1. Correct the ATM addresses (or swap fibers) on the A500 between the A and B side of the EPN.

Reliability Systems: A Maintenance Aid

6

General

A High or Critical Reliability system provides highly-available call processing because single points-of-failure in the system that result in loss of call processing are minimized. Such a system

- Uses existing duplicated TDM buses
- Duplicates the SPE, translation card, and Tone-Clock circuit pack
- Packet bus redundancy

Each of these components are single points of failure in a standard reliability system.

Duplicated SPE

The two SPEs are mounted in separate carriers and powered by different carrier power supplies. As a result, a high or critical reliability system has two control carriers: the A control cabinet and the B control cabinet.

Since the circuit packs in the two SPEs are the same, the SPEs have identical capabilities. Either SPE can act as the active SPE. However, only one of the SPEs can be the active SPE at any given time. The active SPE performs the same operations that the single SPE performs in a standard system; that is, all call processing, administration, and maintenance activities being performed by the switch. All memory writes performed on the active SPE are copied to the other SPE. The other SPE is known as the standby SPE. Its role is to take over as the active SPE if the current active SPE fails. If the active SPE (or a component of the active SPE) fails, the system automatically switches to the standby SPE.

Under normal conditions, the system operates using both TDM Buses. If the system detects transmission problems on one of the buses, it takes that bus out of service and operates with only one bus, but also reduces capacity. However, if the system detects a problem with one of the Tone-Clock circuit packs, it is able to take that circuit pack out of service without any impact on system capacity or performance.

The Packet Bus is NOT duplicated in the same way that the TDM Bus is duplicated (that is, there is one Packet Bus, while there are two TDM Buses). However, there are several spare leads on the Packet Bus that are not normally used.

In a High or Critical Reliability systems, the TN771 Maintenance/Test circuit pack is required in the PPN, but is optional in EPNs. In Critical Reliability systems, the TN771 is required in both the PPN and each EPN. This circuit pack detects faulty Packet Bus leads and instructs all Packet circuit packs (for example, ISDN-BRI, Packet Control, or TN570 Expansion Interface) to use up to three spare leads in place of defective ones.

The rest of this chapter provides a detailed descriptions of the High and Critical Reliability systems that are available as well as of the Standard system that is available across the board. The chapter explains the duplicated hardware and includes a description of the TN772 Duplication Interface circuit pack. It provides a look at the following concepts relevant to High or Critical Reliability systems: memory shadowing, SPE modes, and SPE-interchanges.

In addition, this chapter contains technical descriptions important to the general maintenance of High and Critical Reliability systems, such as a list of the appropriate system technician commands, SPE circuit pack LED strategies, installation and replacement procedures for SPE Control Carrier circuit packs, and for the Inter-Carrier Cable (ICC).

This chapter uses the terms “Standard Reliability system” or “Standard system” to denote a system without duplication.

Reliability Options

Standard, High and Critical reliability systems offer an increased level of reliability by duplicating various components so that standby components can take over (interchange) when a failure occurs on an active component. Most interchanges take place with no disruption of current service and allow for repairs to be made without disruption. Furthermore, duplication allows for the upgrading and maintenance of duplicated components and software without service disruption. The following sections describe which components are duplicated with each option.

Standard Reliability

On standard reliability systems, the 512-time-slot TDM bus is divided into two duplicate 256-time-slot buses, A and B. Call traffic is shared between the two buses. The first five time slots on each bus are reserved for the control channel, which is active on only one of the two buses at a time. Likewise, the next 17 time slots are reserved for carrying system tones. The tone time slots are not necessarily on the same bus (A or B) as the control channel. If any failure that affects the ability of the active control channel or the tone time slots to function takes place, the other bus becomes active for those time slots. For more information, see TDM-BUS Maintenance section in Chapter 10, ‘‘Maintenance Object Repair Procedures’’, and the **set tdm** command in Chapter 8, ‘‘Maintenance Commands and Trouble-Clearing Aids’’.

High Reliability

High Reliability systems duplicate components that are critical to the viability of the system as a whole to prevent a single failure from dropping all service. These components include the following:

- PPN control carrier and carrier power units (OLSs)
- All SPE circuit packs, including the Processor, Memory, Network Controller, Processor Interface, Packet Controller, and Duplication Interface circuit packs
- PPN Tone Clock circuit pack (EPN Tone-Clocks are not duplicated)
- TDM buses (described in the previous section)

NOTE:
In High reliability systems, a TN771 Maintenance/Test circuit pack is required in the PPN, but is optional in EPNs.

The duplicated SPEs operate in active/standby fashion. Operation of this duplication is described in the STBY-SPE and DUPINT MO sections in Chapter 10, ‘‘Maintenance Object Repair Procedures’’. Interchanges of the SPE and of PPN Tone-Clocks operate independently unless induced by use of the SPE-select switches.

Critical Reliability

Critical Reliability systems include all of the features of the High Reliability option described in the previous section. Additionally, these systems duplicate components of Port Network Connectivity (PNC) and of other components that are critical to the viability of each EPN. These components include the following:

- PPN and EPN Tone-Clock circuit packs
- PPN and EPN Expansion Interface circuit packs
- Inter-PN cabling

NOTE:
In Critical Reliability systems, the TN771 Maintenance/Test circuit pack is required in both the PPN and EPN.

The entire direct-connected fiber is duplicated between each pair of port networks. Each duplicated fiber pair operates in an active/standby manner with all inter-PN calls set up on both fibers so that the active SPE can assume control without disruption of service. Each fiber pair between port networks operates independently of the other fiber pairs with respect to the active/standby operation, that is, the A-carrier fiber can be active between the PPN and EPN 1, and the B-carrier fiber can be active between the PPN and EPN 2.

The Tone-Clocks in each EPN operate in an active/standby manner independently from other duplication strategies.

Duplicated Hardware

A description of the hardware components used in a High or Critical Reliability system follows.

SPE Duplication

Each SPE in a high or critical reliability system consists of the following circuit packs:

- Processor Circuit Pack (TN2404/TN790)
- Network Control Circuit Pack (TN777B)
- Packet Control Circuit Pack (TN778)

NOTE:
There may be zero or one Packet Control circuit pack. However, both SPEs must have an equal number of circuit packs.

- Processor Interface Circuit Pack(s) (TN765)

  NOTE:
  There may be zero, one, or two Processor Interface circuit pack. However, both SPEs must have an equal number of Processor Interface circuit packs.

- Duplication Interface Circuit Pack (TN772)

Duplication Interface Circuit Pack

The Duplication Interface circuit pack is required to support SPE duplication. Duplication Interface A is part of the SPE in the A control carrier, and Duplication Interface B is part of the SPE in the B control carrier.

The Duplication Interface circuit packs provide a broad range of functionality. Alone, Duplication Interface A provides control of the following components: the duplicated Processor circuit packs, the duplicated Tone-Clock circuit packs, the environmental maintenance monitoring and control, and G3MT terminal connection. Together, Duplication Interface A and Duplication Interface B provide memory shadowing from Active SPE Memory to Standby SPE Memory and communication between software on the Active SPE and the Standby SPE.

Duplication Interface A controls a lead that indicates to the duplicated Processor and Network Control circuit packs, respectively, which SPE is currently the Active SPE. This lead is known as the SPE Select lead. Duplication Interface A controls another set of leads that indicate to the duplicated TN768 and TN780 8

Tone-Clock circuit packs which of the two is currently the active one. These leads are known as the Tone-Clock Select leads. System software can request that the SPE Select lead and/or the Tone-Clock Select leads be changed. Duplication Interface A controls and monitors in the PPN of a High or Critical Reliability system the same set of environmental leads that the EPN TN775 or TN775B Maintenance circuit pack controls and monitors in an EPN.

The Duplication Interface circuit packs communicate with one another over the Inter-Carrier Cable (ICC). In a multicarrier cabinet, the ICC physically consists of two 25-pin connector cables known as ICC-A and ICC-B. In a single-carrier cabinet, the ICC physically consists of three 25-pin connector cables known as ICC-A, ICC-B, and ICC-C. The ICC connects the Duplication Interface circuit packs via pin fields on the backplane. The pin fields where ICC-A and ICC-B (and ICC-C in a single-carrier cabinet) are connected are labeled on the backplane near the pin fields for the Duplication Interface circuit packs. The ICC carries leads related to maintaining a High or Critical Reliability system. Furthermore, without the ICC properly attached, the system cannot function as either a High or Critical Reliability system or as a Standard system.

The Duplication Interface circuit packs support serial links that provide for system access terminal connection, memory shadowing from Active SPE Memory to Standby SPE Memory, and communication between software on the Active SPE and the Standby SPE. Four serial links are supported:

1. The serial link from Duplication Interface A to the system access terminal.
2. The serial link from Duplication Interface A to the Maintenance/Tape Processor in carrier A.
3. The serial link from Duplication Interface A to the Maintenance/Tape Processor in carrier B.
4. The serial link from Duplication Interface A to Duplication Interface B.

NOTE:
The Duplication Interface B circuit pack does not communicate directly with either Maintenance/Tape Processor or with the G3MT.

Duplication Interface A supports the serial channel to the G3MT that is connected to the Duplication Interface A circuit pack by a connector on the back of carrier A labeled “DOT” (Duplication Option Terminal). If the Duplication Interface A circuit pack becomes defective, and the B carrier becomes the Active SPE, the terminal can be connected to the Maintenance/Tape Processor in carrier B by connecting the terminal to the connector labeled "TERM" on the back of carrier B. If the Duplication Interface A circuit pack becomes defective and carrier A becomes the Active SPE, the terminal can be connected to the Maintenance/Tape Processor in carrier A by connecting the terminal to the connector labeled "TERM" on the back of carrier A.

Communication between software on the Active SPE and the Standby SPE is conducted via a message flow between the two Processors. The flow of messages from the Processor in carrier A to the Processor in carrier B is as follows: Processor A to Maintenance/Tape Processor A over the serial link to Duplication Interface A over the serial link to Maintenance/Tape Processor B to Processor B. The flow in the reverse direction is exactly opposite.

The serial link between Duplication Interface A and Duplication Interface B is involved only in memory shadowing from the Active SPE to the Standby SPE as described in the ‘‘Memory Shadowing’’ section.

SPE Select Switches

The SPE-SELEC (SPE Select) switches are located on the TN772 Duplication Interface circuit packs and are used to hard-select the Active SPE in a high or critical reliability system. “Hard-select” means that the SPE Select switches can be moved from the AUTO position to force the current Active SPE to remain the Active SPE or to force the current Standby SPE to become the Active SPE. Hard selection of the Active SPE using the SPE Select switches overrides any attempts by the system software to switch to the Standby SPE to make it become the Active SPE.

Each switch has three positions:

- SPE-A (the left position)
- AUTO (the middle position)
- SPE-B (the right position)

To hard-select SPE A as the Active SPE, *both* SPE Select switches must be moved **one at a time** to the SPE-A position. To hard-select SPE-B as the Active SPE, *both* SPE Select switches must be moved to the SPE-B position. Any other combination of SPE Select switches leave control of the Active SPE to the system software.

Inter-Cabinet Cable

As described previously, the ICC connects the two TN772 Duplication Interface circuit packs and is a basis of support for the Duplication Interface circuit pack functionality described previously.

The ICC carries leads related to maintaining a High or Critical Reliability system. The SPE Select lead indicates which SPE is the Active SPE. The Tone-Clock Select leads indicate which Tone-Clock circuit pack is active. SPE Select switch state leads indicate the position of the SPE Select switches. Emergency Transfer leads indicate whether Emergency Transfer is on or off in the PPN cabinet. Other leads “combine” the INADS, CDR, and the Customer-Provided Alarming device channels from the two Maintenance/Tape Processors.

The ICC also carries an indication of whether memory shadowing is enabled or disabled. Information to be shadowed is sent over the serial link between Duplication Interface B and Duplication Interface A; this serial link is carried over the ICC.

Communication between software on the Active SPE and the Standby SPE is sent over the serial link between Duplication Interface A and the Maintenance/Tape Processor in carrier B. This serial link is also carried over the ICC.

The presence of the ICC also causes ID pins on the backplane to indicate that the system is a high or critical reliability system rather than a standard reliability system.

The ICC is difficult to connect, and its proper connection is critical to the operation of the system. Refer to the ‘‘Procedure for Installing/Replacing the Inter-Cabinet Cable’’ section for details on how to properly connect the ICC.

Tone-Clock Circuit Pack Duplication

For more information about the Tone-Clock circuit packs see TONE-BD in Chapter 10, ‘‘Maintenance Object Repair Procedures’’.

The TONE-BD (Tone-Clock) MO functionality is made up of the TONE-PT (Tone Generator) and the TDM-CLK (TDM Bus Clock). The Tone Generator provides all tones required by the system; the TDM Bus Clock provides synchronization for the TDM Bus and aids in monitoring and selection of SYNC (Synchronization) references.

Each High or Critical Reliability system provides two Tone-Clock circuit packs. In this configuration, a failed Tone-Clock circuit pack is switched off-line and an operational circuit pack is put on-line. Duplication Interface A selects the Active Tone-Clock circuit pack by driving the Tone-Clock Select lead. The selection of the Active Tone-Clock circuit pack is independent of the selection of the Active SPE.

Time Division Multiplexing Bus Duplication

The TDM Bus is composed of two separate, independent buses called bus A and bus B. The first five time slots of both buses are reserved for communication between the SPE and port circuit packs. These time slots are known as the control channel. The control channel is a vital component and must be operational for the system to provide meaningful customer voice and data services. In addition to the control channel time slots, several other time slots are reserved for system use. These additional time slots are for the standard tones. The standard tones include the dial tone and the touch tones.

The ability to move the control channel and tones from a defective TDM Bus to an operational TDM Bus is a key component of a highly-available system. The system can detect transmission errors on the control channel, errors can be diagnosed, and corrective actions can be taken when necessary. If a bus is found to be defective, it is taken out-of-service. All existing calls on the out-of-service bus are maintained, but no new calls are assigned to the out-of-service bus.

In addition to the system software’s ability to detect a defective bus and perform a TDM Bus switch, the user also has the ability to specify if and when a scheduled control channel switch is to be performed.

Packet Bus Redundancy

The Packet Bus is used to provide ISDN-BRI signaling via the TN778 Packet Control circuit pack. The Packet Bus is not physically duplicated in the same way that the TDM Bus is duplicated. However, there are several spare leads on the Packet Bus itself that are not normally used. The Maintenance/Test circuit pack has the ability to test the Packet Bus and discover shorted or open leads on the Packet Bus. When such a fault is discovered, the Maintenance/Test circuit pack sends a message to each circuit pack that uses the Packet Bus, instructing that circuit pack to use one of the spare leads in place of the defective lead. Additionally, the circuit pack can recover up to three Packet Bus lead failures by this mechanism. This provides high availability by decreasing the chance of a blocking Packet Bus fault by two orders of magnitude.

Table 6-1 indicates when the TN771 Maintenance/Test circuit pack is required in each cabinet or port network.

Table 6-1. TN771 cabinet/port network requirements

			TN771 Maintenance circuit pack required	
Model	**Reliability**	**PACCON**	**PPN**	**EPNs[1]**
G3s, i, si	Standard	N	N	N
G3s, i, si	Standard	Y[2]	Y	N
G3i, si	High	N	N	N
G3i, si	High	Y[2]	Y	N
G3i, si	Critical	N	N	N
G3i, si	Critical	Y[2]	Y	Y

1 EPNs means all port networks in an EPN cabinet, that is, dual port networks may require two TN771s in the cabinet, one per port network.

2 For example, a PACCON board is required for BRI/ASAI or ISDN-PRI using PACCON

Duplication Concepts

High and Critical Reliability systems employ several concepts of duplication. These are described in the following sections.

Memory Shadowing

Most of the time the Standby SPE is in a mode known as Standby Mode (see "SPE Modes" section) in which it is ready to assume the role of the active SPE. To be ready to assume the role of the active SPE, PR-MEM must be an up-to-date reflection of active SPE Memory. This is accomplished by the memory shadowing mechanism.

The SHDW-CIR (Common Shadow Circuitry) on the Active SPE TN772 DUPINT (Duplication Interface) detects all memory writes that the active SPE PROCR (Processor) makes to Active SPE Memory. The active SPE Common Shadow Circuitry sends this information to the Common Shadow Circuitry on the Standby SPE Duplication Interface via the ICC. The Common Shadow Circuitry on the Standby SPE Duplication Interface then writes the data to Standby SPE Memory. This logical connection between Active SPE Memory and Standby SPE Memory is known as the SHDW-LNK (Memory Shadowing Link).

Although most of the components making up the Memory Shadowing Link (that is, Active SPE Memory, both sets of Common Shadow Circuitry, and Standby SPE Memory) are tested and maintained individually, the integrity of the entire logical connection is also tested and maintained to make sure that the shadowing mechanism is functional and that Standby SPE Memory is the same as Active SPE Memory. Therefore, this testing is done under the guise of the Memory Shadowing Link.

SPE Modes

As described earlier, the Active SPE is the SPE that is currently responsible for all call processing, administration, and maintenance activities being performed by the switch. The Active SPE is always in Active Mode.

The role of the Standby SPE is to be ready to take over as the Active SPE in the event that the current Active SPE fails. The Standby SPE does not perform Call Processing or Administration activities. It does perform Maintenance activity, but this is carried out completely under the direction of the Active SPE in order to monitor and maintain the health of the Standby SPE.

The Standby SPE is always in one of three modes: Standby, Maintenance, Busyout, or Down. Usually the Standby SPE is in Standby Mode. In this mode, the SW-CTL (Switch Control) on the Standby SPE Network Control circuit pack is isolated from the TDM Bus so that it does not attempt to control the bus and interfere with the Switch Control on the Active SPE Network Control circuit pack. Similarly, the Standby SPE Packet Control circuit pack is isolated from the Packet

Bus so that it does not attempt to control the Packet bus, and thus interfere with the Active SPE Packet Control circuit pack. The Standby SPE PROCR (Processor) is held in a reset state so that it does not run software. Finally, Standby SPE is being shadowed into from Active SPE Memory—meaning that Standby SPE Memory is updated to reflect every change in Active SPE Memory (for example, calls and administration changes). In Standby Mode, the Standby SPE is available to assume the role of the Active SPE.

In certain circumstances, the Standby SPE is put into Maintenance Mode by the Active SPE. In this mode, the Standby SPE is still isolated from the TDM and Packet Buses, but is no longer having its Memory shadowed into; its Processor is no longer held in a reset state. In Maintenance Mode, the Standby SPE accepts maintenance activity requests from the Active SPE to perform testing on Standby SPE components. For many of the requested activities, system software on the Standby SPE is brought up to conduct the activity. Translation saves and announcement saves may be performed on the Standby SPE when it is in Maintenance Mode. While in Maintenance Mode, the Standby SPE is not as readily available to assume the role of the Active SPE, but may do so depending on the severity of the Active SPE fault(s).

In Busyout Mode, the Standby SPE is busied out by the *busyout SPE-standby* command. Only system technician-requested activities are carried out on the Standby SPE until a *release SPE-standby* command is executed. Refer to the **status system** command in Chapter 8, ‘‘Maintenance Commands and Trouble-Clearing Aids’’ for information concerning Standby Modes. Whenever the Standby SPE is returned to Standby Mode from Maintenance Mode, its Memory is refreshed.

NOTE:
Verify that the Standby SPE is functional (no duplication alarms exist and the SPE has returned to the Standby Mode) by running the **status system 1** command. If the standby SPE is in the maint/idle mode with no standby alarms, use the **standby refresh** command to put the standby SPE into the standby mode. Verify the results by using the **status system 1** command. For more information about the **status system** command see Chapter 8, ‘‘Maintenance Commands and Trouble-Clearing Aids’’.

NOTE:
The system software automatically returns the Standby SPE from Maintenance Mode to Standby Mode at the completion of any maintenance activity. However, it is also possible to force the Standby SPE to return to Standby Mode by issuing the **refresh spe-standby** command from the G3MT terminal. The **refresh spe-standby** command preempts Standby SPE Maintenance Mode except that of entering maintenance mode. See the ‘‘System Technician Commands for High and Critical Reliability Systems’’ section for a description of the **refresh spe-standby** command.

This means that all of Active SPE DRAM Memory is shadowed over into Standby SPE Memory. The refresh is necessary because, while in Maintenance Mode, memory shadowing to the Standby SPE is disabled, and Standby SPE Memory is not updated to reflect changes in Active SPE Memory. After the refresh, Standby SPE Memory is again an up-to-date reflection of Active SPE Memory.

The Standby SPE goes into Down Mode when certain error conditions are detected. These error conditions are described in detail in the “Hardware Error Log Entries and Test to Clear Values” section of STBY-SPE (Standby SPE) Maintenance documentation in Chapter 10, ‘‘Maintenance Object Repair Procedures’’. Once the error condition(s) that caused the Standby SPE to go into Down Mode is (are) corrected, the Standby SPE is first put into Maintenance Mode to conduct testing on Standby SPE components and is then returned to Standby Mode.

Use **status system** to determine the current mode of the Standby SPE.

SPE-Interchanges

The process by which the Standby SPE takes over for the Active SPE is referred to as an SPE-interchange. There are six conditions under which an SPE-interchange is initiated:

- Upgrade Software

  Type **upgrade software** to upgrade the software on a High or Critical Reliability system, reboot the Standby SPE from the standby translation card, and invoke an SPE-interchange so that the system is running on new software.

- System Technician Command

  Type **reset system interchange** on the G3MT terminal to initiate an SPE-interchange.

- Alarm Condition

  If a Major or Minor alarm is activated on any circuit pack, an SPE-interchange is initiated, provided the health of the Standby SPE is better than that of the Active SPE. Table 6-2 on page 6-14 lists the MOs, the alarm levels, the level of SPE-interchange initiated, and the severity given to the alarm for all MOs that can cause software requested SPE-interchanges. The health of an SPE is based upon the single most severe alarm active within that SPE. The higher the severity level, the more severe the problem. The restart level of the interchange also depends on the single most severe alarm within the active SPE. Hot Restarts occur only when the Standby SPE is in standby mode. For example, the active SPE has a MAJOR SHDW-CIR and a MINOR DATA-BD alarm, and the standby SPE has a MAJOR TAPE alarm. In this case, the severity level of the active is 60, the severity level of the standby is 65, and no SPE-interchange would occur.

- SPE Select Switches

  An SPE-interchange can be initiated by moving both SPE Select Switches, **one at a time**, to the position that selects the Standby SPE for Active Mode. The SPE Select Switches were described earlier in this chapter.

- Scheduled Maintenance

  An SPE-interchange can be requested as a part of scheduled maintenance. This mechanism is used to exercise both SPEs. An SPE-interchange can be requested as part of scheduled maintenance by issuing the **change system-parameters maintenance** command and updating the form.

- Processor Insanity

  Duplication Interface A (DUPINT, TN772) periodically audits the sanity of each of the Processor circuit packs. If the Active SPE does not respond to the sanity audit, Duplication Interface A initiates an SPE-interchange.

Table 6-2. Software-Requested Interchanges Caused by Alarm Conditions

Maintenance Object	Alarm Level	On/Off Board	Fault Severity Level	Restart Level
STBY-SPE	WARNING	OFF	120	None
MEM-BD	MAJOR or MINOR	ON	110	Hot or Warm[1]
MEMORY	MAJOR or MINOR	ON	110	Hot or Warm[1]
STBY-SPE	MAJOR	ON	100	None
PROCR	MAJOR	ON	70	Hot or Warm[1]
SW-CTL	MAJOR	ON	65	Cold 2
MEM-CARD	MAJOR	OFF	65	Cold 1
DUPINT	MAJOR	ON	61	Hot
CARR-POW	MAJOR	ON	61	Cold 2
SHDW-CIR	MAJOR	ON or OFF	60	Warm
SHDW-LINK	MAJOR	ON	60	Warm
SW-CTL	MINOR	ON	40	Hot
PR-MAINT	MINOR	ON	30	Hot
PI-BD	MAJOR or MINOR	ON	20	Hot
PKT-CTRL	MAJOR	ON or OFF	20	Hot
PKT-CTRL	MINOR	ON or OFF	15	Hot
PI-PT	MAJOR	ON	15	Hot
DATA-CHL	MINOR	ON	15	Hot
DATA-CON	MINOR	ON	15	Hot
DATA-BD	MINOR	ON	15	Hot
CARD-MEM	MINOR	ON or OFF	10	Hot
PR-MAINT	MINOR	OFF	8	Hot

1 If the Standby SPE is in Standby mode when the alarm occurs, a Hot SPE-Interchange occurs. If the Standby is in Maintenance mode when the alarm occurs, however, a Warm SPE-Interchange rather than a Hot SPE-Interchange occurs.

Regardless of the condition that initiates an SPE-interchange, the G3MT is always logged off as a result of the SPE-interchange. The G3MT is available to log into after the SPE-interchange is complete and the “login” prompt is displayed.

System Technician Commands for High and Critical Reliability Systems

The following system technician commands support high and critical reliability systems. Complete descriptions of these commands are found in Chapter 8, ''Maintenance Commands and Trouble-Clearing Aids''.

Commands for SPE Duplication

- The **busyout SPE-standby** command stops all background maintenance activities on the Standby SPE, and it doubles memory shadowing.
- The **release SPE-standby** command refreshes the Standby SPE, and it allows all background standby maintenance activities to continue.
- The **status system** command displays the status of the Active SPE and the Standby SPE (among other information).

  NOTE:
  Verify that the Standby SPE is functional (no duplication alarms exist and the SPE has returned to the Standby Mode) by running the **status system 1** command. If the standby SPE is in the maint/idle mode with no standby alarms, use the **standby refresh** command to put the standby SPE into the standby mode. Verify the results by using the **status system 1** command. For more information about the **status system** command see Chapter 8, ''Maintenance Commands and Trouble-Clearing Aids''.

- The **status mem-card [1] a|b** command displays the status of the Active SPE Memory Card or the status of the Standby SPE Memory Card.
- The **test processor [1] a | b [short | long]** command tests the specified Processor circuit pack.
- The **test memory [1] a | b [short | long]** command tests the specified on-circuit pack memory with an optional Memory Expansion circuit pack.
- The **test card-mem [1] a | b [short | long]** command tests either the Active SPE Memory Card or the Standby SPE Memory Card.
- The **test network-control [1] a | b [short | long]** command tests the specified TN777B Network Control circuit pack and the Memory Card.
- The **test packet-control [1] a | b [short | long]** command tests the specified TN778 Packet Control circuit pack.
- The **test interface [1] a1 | b1 [short | long]** command tests the specified first TN765 Processor Interface circuit pack.
- The **test interface [1] a2 | b2 [short | long]** command tests the specified second TN765 Processor Interface circuit pack.

- The **test duplication-interface [1] a | b [short | long]** command tests the specified TN772 Duplication Interface circuit pack.
- The **test shadow-link** command tests the SHDW-LINK (Memory Shadowing Link). Refer to “MEM-BD” in Chapter 10, ‘‘Maintenance Object Repair Procedures’’ for a detailed description of this command.
- The **set vector <level> [spe-active | spe-standby | spe-maint]** command requests that a core dump be taken when a system restart of level **<level>** occurs.
- The **reset system interchange** command requests an SPE-interchange.
- The **test spe-standby [short | long]** command tests the Processor, Memory, Network Control, Processor Interface, Duplication Interface, and translation card circuit packs in the control carrier containing the Standby SPE. Refer to “STBY-SPE” in Chapter 10, ‘‘Maintenance Object Repair Procedures’’ for a detailed description of this command.
- The **refresh spe-standby** puts the Standby SPE into Standby mode.

CAUTION:
Because of the power of the “refresh spe-standby” command, its full impact is described here so that it is clearly understood.

The **refresh spe-standby** command is used to immediately put the Standby SPE into Standby Mode. The command conducts the same activities regardless of whether the Standby SPE is already in Standby Mode or whether it is in Maintenance Mode. When this command is issued, most Standby SPE maintenance activity that is currently in progress is preempted, the Standby SPE Processor is held reset, and the Standby SPE Memory is refreshed (that is, all of Active SPE DRAM Memory is shadowed to Standby SPE Memory). Recall that the refresh is necessary because, while the Standby SPE is in Maintenance Mode, memory shadowing is disabled. When the Standby SPE is returned to Standby Mode, its Memory must be brought up-to-date with Active SPE Memory. If the system was trying to enter Maintenance Mode, the **refresh spe-standby** command aborts with the message, “Cannot interrupt Standby SPE while entering maintenance mode; please try later.”

WARNING:
Because of its power to preempt Standby SPE maintenance activities, the refresh spe-standby command should be used judiciously. If the Standby SPE is in Maintenance Mode when the “refresh spe-standby” command is issued, the maintenance activity that is being conducted by the Standby SPE is immediately terminated.

The following side-effects may occur:

- Testing of the Standby SPE components that are the target of the maintenance activity may not have completed. Depending on the maintenance activity and the point at which it is terminated, tests that detect faults and/or lack of faults on those Standby SPE components may not have had the opportunity to run. Accordingly, alarms are not raised or retired on the components.
- If the maintenance activity is scheduled maintenance, and if the **refresh spe-standby** command is issued before a scheduled translation save is performed, the translation save is not done, and the translation data on both the Active SPE and Standby SPE tapes or memory cards do not reflect changes made since the last translation save.

In general, after a **refresh spe-standby** command has been used and the user has finished working with the system, the **test spe-standby long** command should be issued if the **refresh spe-standby** command preempted a Standby SPE maintenance activity.

Additionally, if the **refresh spe-standby** command was used in the time frame in which scheduled maintenance with a translation save was to have been conducted, the **save translation** command should be issued to ensure that the current translation data has been written to the Active SPE and Standby SPE tapes or Memory Cards. When using the **refresh spe-standby** command to preempt Standby SPE maintenance activities, it may be necessary to issue the **refresh spe-standby** command multiple times to preempt all Standby SPE maintenance activity. If the **refresh spe-standby** command successfully completes five times without the Standby SPE becoming labeled “standby” on the status system form, wait 20 minutes. This does not include cases where the command completes with the G3MT terminal message “Refresh not successful; use ‘display errors’ to check for STBY-SPE errors” or “Cannot interrupt Standby SPE while entering maintenance mode; please try later.” Issue the **refresh spe-standby** command once more.

Commands for TDM Bus Duplication

- The **status system** command displays the bus on which the control channel and tones currently reside (among other information).
- The **test tdm port-network [1 | 2 | 3] [short | long]** command tests both TDM Buses.
- The **set tdm port-network [1 | 2 | 3] a | b [override]** command moves the control channel and dedicated tones to the specified TDM Bus.
- The **busyout tdm port-network [1 | 2 3] bus a | b** command places the specified bus in a maintenance busy state.
- The **release tdm port-network [1 | 2 3] bus a | b** command places a busied-out bus back in service.

Commands for Packet Bus Redundancy

- The **status system** command displays the status of the Packet Bus, and the number of faulty and open leads that the Maintenance/Test circuit pack has found.
- The **test pkt port-network [1 | 2 | 3]** command tests the Packet Bus.

Commands for Tone-Clock Circuit Pack Duplication

- The **status system** command displays the Tone-Clock circuit pack that is currently supplying tones and clocks (among other information).
- The **test tone-clock [1 | 2 |3] a | b [short | long]** command tests the specified TN768 Tone-Clock circuit pack.
- The **set tone-clock [1 | 2 |3] a | b [override]** command makes the specified Tone-Clock circuit pack active.
- The **busyout tone-clock [1 | 2 |3] a | b** command places the specified Tone-Clock circuit pack in the maintenance busy state.

  NOTE:
  This cannot be the one that is currently active.

- The **release tone-clock [1 | 2 |3] a | b** command removes the specified Tone-Clock circuit pack from the maintenance busy state.

Processor Complex Circuit Pack LED Strategies

The LEDs on the circuit packs in the two SPEs have the following meanings:

- Processor Circuit Pack

Yellow	Green	Red	Meaning
On	Off	-	Active mode
On	On	-	Active mode: Maintenance running
Off	On	-	Maintenance mode; Memory not refreshed
Off	Off	-	Maintenance mode; Memory refreshed
-	-	On	Fault on Processor circuit pack

NOTE:
In addition to the standard LEDs, the Processor circuit pack has the red major and minor alarm LEDs, an amber warning LED, a green ack LED, and a red Emergency Transfer LED.

- Duplication Interface Circuit Pack (PICP) (B carrier) (TN772):

Yellow	Green	Red	Meaning
On	-	-	SPC in active mode
	On	-	Maintenance running on PICP
-	-	On	Fault on PICP

- Duplication Interface Circuit Pack (DICP) (A carrier) (TN772):

Yellow	Green	Red	Meaning
On	-	-	SPC in active mode, or A carrier Tone-Clock circuit pack active
	On	-	Maintenance running on DICP
-	-	On	Fault on DICP

Each Duplication Interface circuit pack has another red LED associated with the SPE Select Switch. The purpose of the red switch LED is to serve as a reminder that an SPE is being forced to be the Active SPE and, therefore, the system is not duplicated. Both SPE Select Switch LEDs (one on each Duplication Interface circuit pack) are on when an SPE is being forced to be the Active SPE by the consistent positions of the two SPE Select Switches. Both LEDs are extinguished when the SPE Select Switch positions are inconsistent or when both SPE Select Switches are in the position. In the latter two cases, the Active SPE is automatically selected by the system software.

- Processor Interface Circuit Pack (TN765):

Yellow	Green	Red	Meaning
On	-	-	Link terminated at PICP
	On	-	Maintenance running on PICP
-	-	On	Fault on PICP

- Network Control Circuit Pack (TN777B):

Yellow	Green	Red	Meaning
On	-	-	Link terminated at NCCP
	On	-	Maintenance running on NCCP
-	-	On	Fault on NCCP

There is also an yellow LED (below Memory Card slot). When ON, the Memory Card is in use.

- Packet Control Circuit Pack (PCCP) (TN778)

Yellow	Green	Red	Meaning
On	-	-	Link terminated at PCCP
	On	-	Maintenance running on PCCP
-	-	On	Fault on PCCP

- Tone-Clock Circuit Pack:

NOTE:
For information on the standard amber/green/red LEDs see TONE-BD Maintenance Object in Chapter 10, ‘‘Maintenance Object Repair Procedures’’.

Repair Procedures for High and Critical Reliability

This section describes the procedure for installing or replacing Standby SPE circuit packs. These circuit packs are:

- Processor Circuit Pack
- Network/Packet Control Circuit Pack
- Processor Interface circuit pack(s)
- Duplication Interface circuit pack

NOTE:
If you are replacing the Processor Circuit Pack, you need to obtain a new license file.

This procedure does **not apply** to the TN768 or TN780 Tone-Clock circuit pack. Refer to 'TONE-BD", "TONE-PT", or "TDM-CLK" in Chapter 10, ''Maintenance Object Repair Procedures'' for the procedure to replace the Tone-Clock circuit pack.

CAUTION:
When circuit packs in the Active SPE are to be replaced, this section provides procedures for performing an SPE-interchange to place the circuit packs in the Standby SPE mode. SPE circuit packs should never be replaced while they are located in the Active SPE.

Use this section when:

1. Defective (that is, alarmed) Active or Standby SPE circuit packs are to be replaced. The procedure begins at the ''Replacing Defective SPE Circuit Packs'' section. Ignore the ''Upgrading SPE Circuit Packs'' section, as it does **not apply** to replacing defective Standby SPE circuit packs.
2. Healthy Standby SPE circuit packs are to be upgraded. The procedure begins at the ''Upgrading SPE Circuit Packs'' section. Ignore the ''Replacing Defective SPE Circuit Packs'' as it does **not apply** to upgrading Standby SPE circuit packs.

The ''Circuit Pack Replacement Procedure'' and ''Additional Tests for Replaced DATA-CHL, PKT-CTRL, and PROCR Circuit Packs'' sections apply to both situations but should be referred to only **after** reading the appropriate sections as instructed previously.

Replacing Defective SPE Circuit Packs

Determine that software is running by looking at the G3MT and verifying that it does not have either the “SPE DOWN MODE” or the “Duplication Interface - Processing Element Communication Down” message displayed.

Software Not Running

If system software is not running or if it stops running at any point during this procedure, the suggested order of Processor Complex circuit packs to replace in an attempt to fix the SPE down problem is:

- Processor circuit pack (TN2404/TN790)
- Network Control circuit Pack (TN777[B])
- Packet Control circuit pack (TN778)
- Duplication Interface circuit pack (TN772)
- Processor Interface circuit pack (TN765)

Software Running

If system software is running, determine which SPE is the Standby SPE by issuing the **status system** command from the G3MT terminal. Look at the SPE and MODE fields in the upper left corner of the form to determine which SPE (A or B) is the Active SPE; it is labeled as “active.” The other SPE is the Standby SPE and is labeled as either “standby,” “maint,” or “down.”

Follow the “Circuit Pack Replacement Procedure” described later for each Standby SPE circuit pack to be replaced. Continue with this procedure as follows.

1. If alarms are against the Active SHDW-CIR, Active DUPINT, or SHDW-LNK, replace the Duplication Interface circuit pack. Proceed to the ‘‘Handling SHDW-CIR and SHDW-LNK Alarms in the Active SPE’’ or ‘‘Handling DUPINT Alarms in the Active SPE’’ sections as applicable.
2. If these sections do not need to be referenced, proceed to the ‘‘Circuit Pack Replacement Procedure’’ section.

The rest of this section describes how the system behaves when there are faulty circuit packs in the SPEs and is meant to be informative rather than part of the general procedure of replacing SPE circuit packs.

NOTE:
When circuit packs **other than the Duplication Interface circuit pack in the Active SPE** are defective, the SPE containing the more severely defective circuit packs is usually in the Standby SPE.

Handling SHDW-CIR and SHDW-LNK Alarms in the Active SPE

Check for the existence of SHDW-CIR alarms against the Active SPE Duplication Interface circuit pack or SHDW-LNK alarms. If there are Active SPE SHDW-CIR or SHDW-LNK alarms, inform the customer that a COLD 2 restart of the system is needed and determine a time at which to restart may be. At that time, complete the following steps:

1. Make sure that the tape (memory card) in the Active SPE tape unit (memory card slot) has the most current translations. If it does not, issue the **save translations spe-active** command to put the most current translations on it.
2. Exchange the tapes (memory cards) in the Active SPE and Standby SPE so that the Standby SPE tape unit (memory card slot) contains the tape (memory card) from the previous step.
3. For a 386 system, if the Standby SPE is not in standby mode, issue the **refresh spe-standby** command to put it into standby mode if possible (see the previous Note). If the Standby SPE was successfully put into standby mode, then issue the **reset system interchange** command to cause a PEI. If the refresh or system interchange are unsuccessful, then use the SPE select switches to hard select the Standby SPE (this will result in a COLD 2 restart of the system).
4. If the **upgrade software** (**reset system interchange**) command is successful, an SPE-interchange results in the new Active SPE performing a COLD 2 (HOT) restart. Follow the “Circuit Pack Replacement Procedure” described later. If the **upgrade software** command failed, determine why the failure occurred, resolve the problem, and repeat this entire procedure.

Handling DUPINT Alarms in the Active SPE

Check for the existence of DUPINT alarms against the Active SPE Duplication Interface circuit pack. If there are Active SPE DUPINT alarms, inform the customer that a reboot of the system may be required and determine a time at which a reboot may be done. At that time, complete the following steps:

1. Make sure that the translation card in the Active SPE has the most current translations. If it does not, issue **save translations spe-active** to put the most current translations on it.
2. Exchange the translation cards in the Active SPE and Standby SPE so that the Standby SPE contains the card with the most current translations.
3. Throw the SPE Select Switches on the TN772 Duplication Interface circuit packs to force an SPE-interchange so that the current Standby SPE becomes the new Active SPE.

   If the Duplication Interface circuit pack actually severed the Memory Shadowing Link resulting in corruption of Standby SPE Memory, the SPE-interchange results in the new Active SPE performing a Reboot.

However, if the defect in the Duplication Interface circuit pack did not sever the Memory Shadowing Link, the SPE-interchange results in the new Active SPE performing a Warm Start instead.

4. After the SPE-interchange is complete, log into the terminal. Follow the "Circuit Pack Replacement Procedure" *for each circuit pack to be replaced in the new Standby SPE*.

Upgrading SPE Circuit Packs

Determine which SPE is the Standby SPE by issuing the **status system** command. Look at the SPE and MODE fields in the upper left corner of the form. The Active SPE; it is labeled as "active." The other SPE is the Standby SPE and is labeled as either "standby," "maint," or "down."

Follow the "Circuit Pack Replacement Procedure" *for each Standby SPE circuit pack to be upgraded*.

When all Standby SPE circuit packs have been upgraded, force the Active SPE to become the Standby SPE as follows:

1. Issue the **status system** command from the terminal. Look at the SPE and MODE fields in the upper left corner of the form to determine the status of the Standby SPE. Recall that the Standby SPE is labeled as either "standby," "maint," or "down."
2. If the Standby SPE is labeled as "maint," continue issuing the **refresh spe-standby** command followed by the **status system** command until the Standby SPE is labeled "standby."

   NOTE:
   It may be necessary to issue the **refresh spe-standby** command multiple times to preempt all Standby SPE maintenance activity. If the **refresh spe-standby** command successfully completes five times without the Standby SPE becoming labeled "standby" on the status system form, wait 20 minutes. Issue the **refresh spe-standby** command once more.

3. If the Standby SPE is labeled "standby," issue the **reset system interchange** command from the G3MT. After the SPE-interchange is complete, log into the terminal, issue the **status system** command, and verify that the SPEs have reversed roles.
4. Follow the "Circuit Pack Replacement Procedure" **for each circuit pack to be upgraded in the new Standby SPE.**

Circuit Pack Replacement Procedure

NOTE:
If you are replacing the Processor Circuit Pack, obtain a new license file.

NOTE:
This procedure **does not** apply to the TN768 Tone-Clock circuit pack. Please refer to “TONE-BD”, “TONE-PT”, or “TDM-CLK” in Chapter 10, ‘‘Maintenance Object Repair Procedures’’ for the procedure to replace the Tone-Clock circuit pack.

NOTE:
See the flowchart of the procedure for installing or replacing Standby SPE Circuit Packs In Duplication Option Systems at the end of this section, for use as a circuit pack replacement maintenance aid.

The following procedure involves throwing the SPE Select Switches to hard-select the current Active SPE. After completing the circuit pack replacement procedure, verify that the SPE Select Switches have been returned to the AUTO position both by noting their position and by noting that the SPE Select Switch LEDs on the TN772 Duplication Interface circuit packs are not on.

1. Throw the SPE Select Switches, **one at a time**, to force selection of the current Active SPE. If SPE B is currently the Active SPE, throw both SPE Select Switches, **one at a time**, to the SPE A position. If SPE A is currently the Active SPE, throw both SPE Select Switches, **one at a time**, to the SPE B position. Throwing the SPE Select Switches automatically disables shadowing.

   NOTE:
   Do not remove power before proceeding with Step 2. All PPN Control Carriers used in High or Critical Reliability Systems (A slot for the Duplication Interface circuit pack identifies these carriers.) have staggered pins to support the hot plug-in of circuit packs.

2. Unseat the Standby SPE Processor circuit pack. (It is not necessary to entirely remove the Standby SPE Processor circuit pack from its slot.)

3. If the circuit pack to be replaced is the TN772 Duplication Interface in the A carrier, continue with this step. Otherwise, proceed to Step 4.

   Issue the **status system** command from the terminal, and check the status of the Tone-Clock in the 1B carrier:

   a. If the SERVICE STATE field indicates that the 1B carrier Tone-Clock is “in” (that is, in service) and the SYSTEM CLOCK and SYSTEM TONES fields indicate that it is “active,” proceed to Step 4.

b. If the SERVICE STATE field indicates that the 1B carrier Tone-Clock is “in” (that is, in service) but the SYSTEM CLOCK and SYSTEM TONES fields indicate that it is “standby,” then check the Error Log for an active Error Type 3329 against the 1B TONE-BD by issuing the **display error** command. If this error exists, proceed to Step 4.

NOTE:
Error Type 3329 implies that the Tone-Clock circuit pack probably cannot provide system clocks and an attempt to set the system clocks to this circuit pack would result in a **reset system 2** of the system. When the 1A Duplication Interface circuit pack is replaced, however, the system experiences a loss of clock, and a **reset system 2** occurs.

If an active Error Type 3329 is not logged against the 1B TONE-BD, issue the **set tone-clock 1B** command from the G3MT terminal to make the 1B carrier Tone-Clock active. Verify that the switch occurs by issuing the **status system** command and checking that the SERVICE STATE, SYSTEM CLOCK and SYSTEM TONES fields are now “in” and “active.” Proceed to Step 4.

NOTE:
If the 1B Tone-Clock circuit pack is defective the switch may have failed and a **reset system 2** may have occurred. In this case, proceed to Step 4. However, the system experiences a loss of clock and another **reset system 2** when the 1A Duplication Interface circuit pack is replaced.

c. If the SERVICE STATE field indicates that the 1B carrier Tone-Clock is “out” (that is, out-of-service), refer to the TONE-BD (Tone-Clock circuit pack), TONE-PT (Tone Generator), and TDM-CLK (TDM Bus Clock) Maintenance documentation in Chapter 10, ‘‘Maintenance Object Repair Procedures’’, to restore it to service. Proceed to Step 4 regardless of whether or not the attempt to restore the 1B Tone-Clock to service was successful.

NOTE:
If the 1B Tone-Clock was not successfully restored to service, the system experiences a loss of clock, and a **reset system 2** when the 1A Duplication Interface circuit pack is replaced.

4. If the circuit pack to be replaced is the TN772 Duplication Interface, throw the SPE Select Switch of the replacement Duplication Interface circuit pack to the same position as the SPE Select Switch on the Duplication Interface circuit pack that was removed.

If the Standby Processor is not being replaced Install the replacement circuit pack and reinsert the Standby SPE Processor circuit pack.

a. If the circuit pack that was replaced was the TN772 Duplication Interface in the A carrier, the system access terminal is logged off. Login back into the system and proceed to Step 7.

5. If the circuit pack to be replaced is a TN2404/TN790 Standby SPE Processor circuit pack loaded with the same software as loaded in the Active Processor or is a Standby SPE Processor circuit pack, install the circuit pack and proceed to Step 7.

6. If the circuit pack to be replaced is a TN2404/TN790 Standby SPE Processor circuit pack and the software is being loaded from the generic program card, continue with the following steps:

NOTE:
The TN2404/TN790 must have the same number of SIMMs as the replaced circuit pack.

a. Insert the generic program card into the Active SPE. Issue the **list configuration software-versions** command. If the software matches and the UPDATE FILE Identifier displays **none**, continue with this procedure. *Replace the translation card in the Active SPE.*

b. Insert the generic program card into the Standby SPE.

c. Install the TN2404/TN790 Standby Processor circuit pack. When the Standby Processor starts to initialize and detects the program card, it does a software upgrade and displays the progress of this upgrade on the terminal.

d. When prompted, replace the program card in the Standby SPE with the translation card. The Standby SPE boots up with the translation.

NOTE:
Perform this operation within two minutes. Otherwise the Standby SPE will boot up without translations. However, it will recover the translations when the Active SPE enables memory shadowing to the Standby SPE.

e. At the prompt **REPLACE TRANSLATION MEM-CARD ON <ACTIVE SPE> WITH SOFTWARE MEM-CARD**, wait 3 minutes for the Standby SPE to initialize before proceeding to next step.

f. Issue the **list configuration software-versions long** command to ensure that both SPEs are running identical software. Use the next step if the this command does not display the software versions, otherwise skip the next step.

g. Issue the **busyout spe-standby** command followed by the **release spe-standby** command to force the Standby SPE into a mode to accept the **list configuration software-versions long** command. Wait 5 minutes for the Standby SPE to initialize and issue the **status system 1st-cabinet** command. The Standby SPE failed to initialize if the Standby SPE Mode is **down**. If the Standby SPE Mode is **maint/init** or **maint/entering**, execute the **busyout spe-standby** and **release spe-standby** command up to 2 more times. If this step does not succeed, try this procedure again.

7. Issue the **status system 1st-cabinet** command. The status system form indicates the presence of MAJOR and MINOR alarms on both SPEs. If SPE alarm counts are displayed, run component tests to resolve these alarms. Allowed tests include **test spe-standby**, **test duplication-interface**, and **test shadow-link**. Use the next step if the allowed test commands are not accepted, otherwise skip the next step.

CAUTION:
If the Duplication Interface circuit pack is being tested, Test #278 fails because the SPE Select Switches are thrown.

8. Issue the **busyout spe-standby** command followed by the **release spe-standby** command to force the Standby SPE into a mode to accept the **test commands** attempted in the previous step. Wait 5 minutes for the Standby SPE to initialize and issue the **status system 1st-cabinet** command. If the Standby SPE failed to initialize if the Standby SPE Mode is **down**. If the Standby SPE Mode is **maint/init** or **maint/entering**, execute the **busyout spe-standby** and **release spe-standby** command up to 2 more times. If this step does not succeed, try this procedure again.
9. If other Standby SPE circuit packs are to be replaced, return to Step 2.
10. Move each SPE Select Switch back to the AUTO position. If any Network Control or the Processor circuit packs were replaced, please refer to the "Additional Tests for Replaced DATA-CHL, PKT-CTRL, and PROCR Circuit Packs" section.

WARNING:
Move only one SPE Select Switch at a time. DO NOT move both switches at the same time.

WARNING:
If the Active SPE has alarms in it, an SPE-interchange may occur after moving each SPE Select Switch back to the AUTO position.

Maintenance activity is performed automatically on the Standby SPE after the SPE Select Switches are returned to their AUTO positions in Step 10. This can be verified by issuing the **status system** command and noting that the Standby SPE is labeled as “maint.” It may take up to 5 minutes for this activity to begin. The maintenance activity itself takes from 10 to 30 minutes to complete.

NOTE:
The time required for the maintenance activity to finish depends on the number of TN765 Processor Interface circuit packs, the number of administered ports on the Processor Interface circuit packs, the number of administered data channels on the TN777B Network Control circuit pack, and the current load on the system.

Verify the completion of the maintenance activity by issuing the **status system 1** command and noting whether the Standby SPE is labeled as “standby.”

Although not recommended at this stage of the procedure, the maintenance activity on the Standby SPE can be preempted using the **refresh spe-standby** command. To preempt the maintenance activity, continue issuing the **refresh spe-standby** command followed by **status system 1** command until the status system form shows that the Standby SPE is labeled “standby.”

It may be necessary to issue the **refresh spe-standby** command multiple times to preempt all Standby SPE maintenance activity. If the **refresh spe-standby** command successfully completes five times without the Standby SPE becoming labeled “standby” on the status system form, wait 20 minutes. Issue the **refresh spe-standby** command once more.

If the **status system 1** command continues to show SPE alarms, issue the appropriate command(s) from the system access terminal to test these alarmed MOs.

After Step 10, if the Active SPE contains more severely defective circuit packs than the Standby SPE, an SPE-interchange may occur. The presence of alarms in the Active and Standby SPE can be verified by issuing the **status system** command. The status system form indicates the presence of MAJOR and MINOR alarms on both SPEs. If the Active SPE has alarms in it, an SPE-interchange may occur. The occurrence of the SPE-interchange can be verified by issuing the **status system** command to determine which SPE is now the Active SPE.

Additional Tests for Replaced DATA-CHL, PKT-CTRL, and PROCR Circuit Packs

After **all** affected circuit packs have been replaced, if the replaced circuit packs include the Network Control circuit pack(s), the Packet Control circuit pack(s), or the Processor circuit pack(s), additional testing is required to ensure that the new circuit packs are healthy. This testing must be done on these circuit packs when they are located in the Active SPE. Issue the **status system** command to determine which SPE is currently the Active SPE and determine the SPE, Active or Standby, in which each replaced Network Control, Packet Control, and/or Processor circuit pack resides.

If any of the replaced circuit packs are located in the Active SPE, test it by issuing the **test network-control [a | b]**, **test packet-control [a | b]**, or **test processor [a | b]** command, as appropriate. If any tests fail or abort, refer to the SW-CTL (Switch Control), DATA-CHL (Network Control Data Channel), PKT-CTRL (Packet Control Circuit Pack, DATA-BD (Network Control Circuit Pack), or PROCR, and PR-MAINT (Maintenance/Tape Processor) Maintenance documentation in Chapter 10, ‘‘Maintenance Object Repair Procedures’’, as appropriate.

If any of these circuit packs are located in the Standby SPE, force the Standby SPE to become the Active SPE as described in “Upgrading SPE Circuit Packs.” However, before the Standby SPE is made to become the Active SPE, the replaced circuit pack should first be tested while on the Standby SPE. Then, test these circuit packs (that are now located in the Active SPE) by issuing the **test network-control [a | b]**, **test packet-control [a | b]**, or **test processor [a | b]** command, as appropriate. If any tests fail or abort, refer to the SW-CTL (Switch Control), DATA-CHL (Network Control Data Channel), DATA-BD (Network Control Circuit Pack), PKT-CTRL (Packet Control Circuit Pack), or PROCR, and PR-MAINT (Maintenance/Tape Processor) Maintenance documentation in Chapter 10, ‘‘Maintenance Object Repair Procedures’’, as appropriate.

WARNING:
Before leaving the system, verify that the SPE Select Switches have been returned to their proper position. The switches should be in the AUTO position and the SPE Select Switch LEDs should be off on both the TN772 Duplication Interface circuit packs.

See the following flowchart, Figure 6-1 on page 6-31, Figure 6-2 on page 6-32 and Figure 6-3 on page 6-33, for the procedure for installing or replacing Standby SPE Circuit Packs in Duplication Option System.

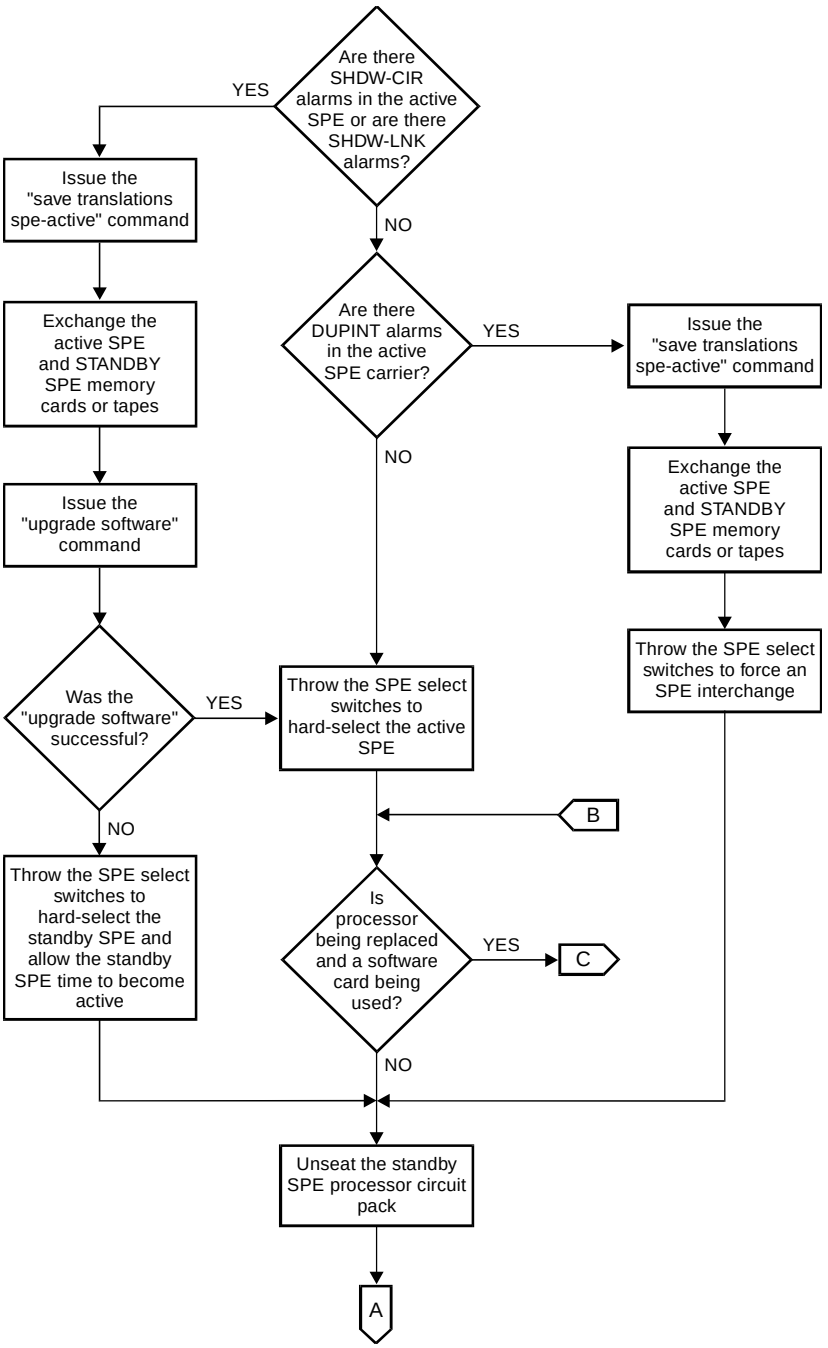

Figure 6-1. Page 1 Procedure for Replacing Standby SPE Circuit Packs

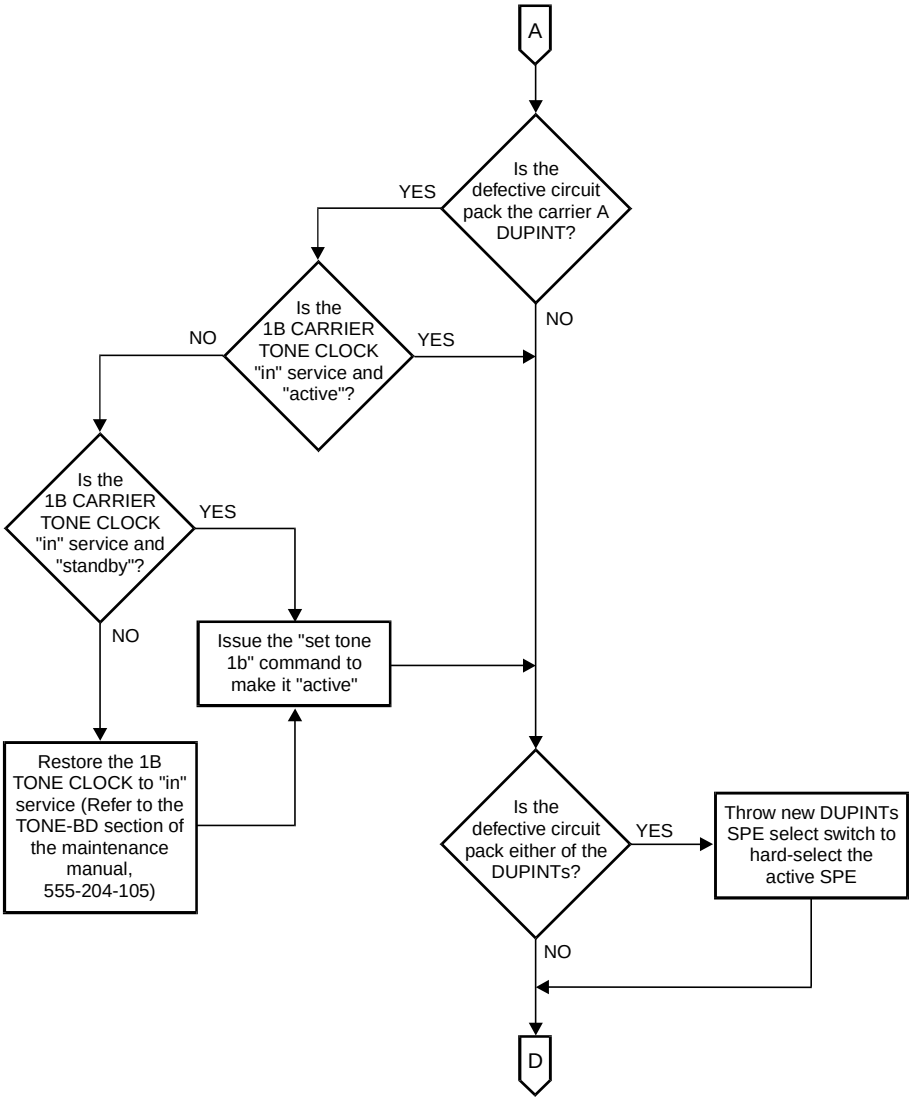

Figure 6-2. Page 2 Procedure for Replacing Standby SPE Circuit Packs

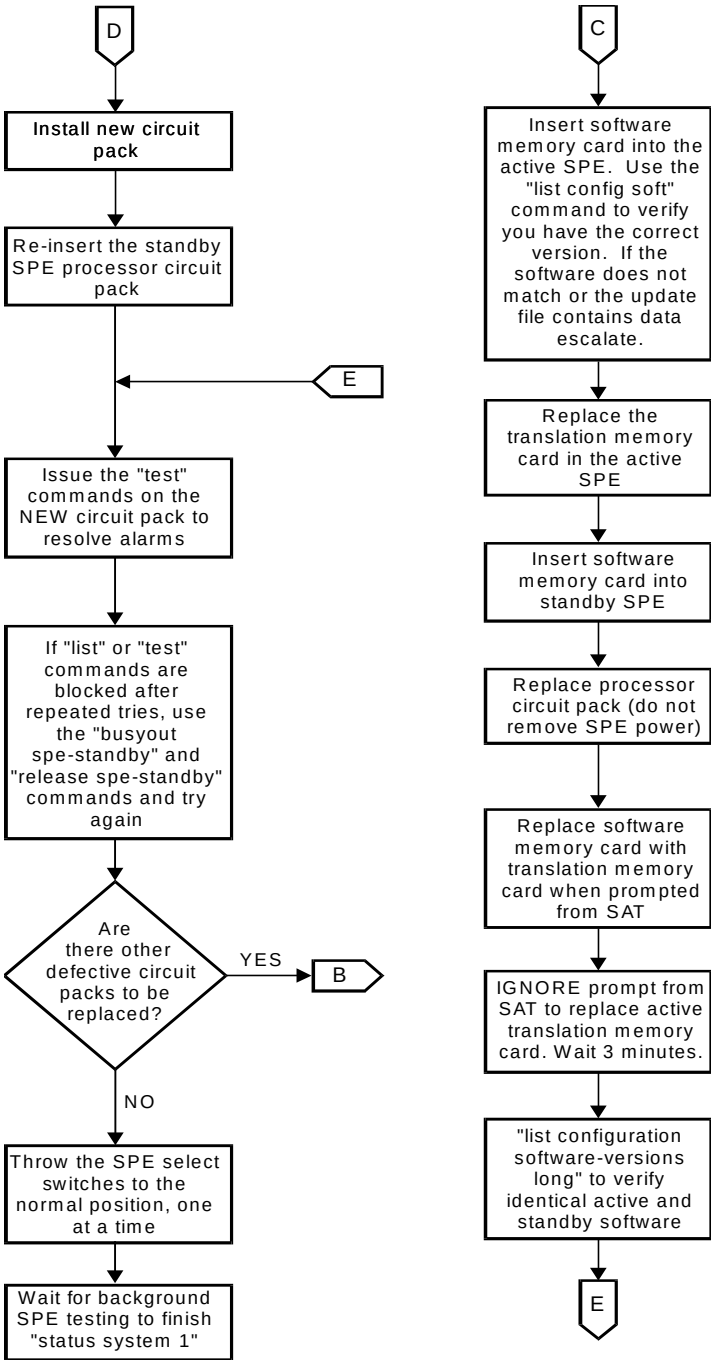

Figure 6-3. Page 3 Procedure for Replacing Standby SPE Circuit Packs

Procedure for Installing/Replacing the Inter-Cabinet Cable

The Inter-Cabinet Cables (ICCs) are physically located on the back of the cabinet behind the panels and between the A control cabinet and the B control cabinet. The panels must first be opened to see the ICCs.

WARNING:
Damage can be done to the Inter-Cabinet Cables during removal or installation. Follow the guidelines listed below to minimize the possibility of damage to the cables and later need of replacement.

To remove ICC-A, ICC-B, or ICC-C:

1. Remove power from the system. Refer to the ''Removing Power'' section in Chapter 5, ''Routine Maintenance Procedures''.
2. Grasp the cable connector, not the cable itself. Attempting to remove a cable by pulling on the cable itself can damage the cable-to-connector interface.
3. Pull the cable straight out. Pulling the connector from the backplane at an angle can bend the backplane pins.
4. Push the ICC connector onto the insulated sleeves.

   CAUTION:
   The pins should not show through the back of this connector. If they do, they ICC may be shorted out.

Check the connector-cable-connector integrity with a continuity test.

To re-install ICC-A, ICC-B, or ICC-C:

1. Verify that the backplane pins are not bent. If any are bent, they must be straightened or replaced before continuing.
2. Align the ICC connector with the backplane pins and push partially into place.
3. Use a dental mirror and light to view the back sides of the connector. Determine that all 50 backplane pins are seated correctly in the ICC connector.
4. Push the ICC connectors fully onto the insulated sleeves. The pins should not show through the back of the connectors. If the pins show through, the ICC may be shorted out.

Blocking Standby SPE Maintenance Activities for System Testing

Sometimes it is necessary to block Standby SPE maintenance activities so that system technician commands that test Standby SPE components can be conducted without being blocked with the G3MT terminal message line “Standby SPE busy with another task; for information use ‘status system’.” To block Standby SPE maintenance activities, perform the steps listed below.

WARNING:
The following procedure involves throwing the SPE Select Switches to hard-select the current Active SPE. After completing the circuit pack replacement procedure, verify that the SPE Select Switches have been returned to the AUTO position both by noting their position and by noting that the SPE Select Switch LEDs on the TN772 Duplication Interface circuit packs are not on.

1. Throw the SPE Select Switches (on the TN772 Duplication Interface circuit packs) to force selection of the current Active SPE. If SPE-B is currently the Active SPE, throw both SPE Select Switches to the right. If SPE-A is currently the Active SPE, throw both SPE Select Switches to the left.
2. Issue **status system 1st-cabinet** from the G3MT terminal. The status system form indicates the presence of MAJOR and MINOR alarms on both SPEs. If SPE alarm counts are displayed, run component tests to resolve these alarms. Allowed tests include test spe-standby, test duplication-interface, and test shadow-link. Use the next step if the allowed test commands are not accepted, otherwise skip the next step.

   CAUTION:
   If the Duplication Interface circuit pack is being tested, Test #278 fails because the SPE Select Switches are thrown.

3. Issue **busyout spe-standby** followed by **release spe-standby** to force the Standby SPE into a mode to accept the **test commands** attempted in the previous step. Wait 5 minutes for the Standby SPE to initialize and issue the status system 1st-cabinet command. If the Standby SPE failed to initialize if the Standby SPE Mode is down. If the Standby SPE Mode is **maint/init** or maint/entering, execute the busyout spe-standby and release spe-standby command up to 2 more times. If this step does not succeed, try this procedure again.
4. Move each SPE Select Switch back to the AUTO position.

   WARNING:
   Move only one SPE Select Switch at a time. DO NOT move both switches at the same time.

Maintenance activity is performed automatically on the Standby SPE after the SPE Select Switches are returned to their AUTO positions in Step 4. This can be verified by issuing **status system** and noting that the Standby SPE is labeled as “maint.” The maintenance activity takes from 10 to 30 minutes to complete. (The time required for the maintenance activity to complete depends upon the number of TN765 Processor Interface circuit packs, the number of administered ports on the Processor Interface circuit packs, the number of administered data channels on the TN777B Network Control circuit pack, and the current load on the system.) The completion of the maintenance activity can be verified by issuing **status system** and noting whether the Standby SPE is labeled as “standby.”

Although not recommended at this stage of the procedure, the maintenance activity on the Standby SPE can be preempted using **refresh spe-standby**. To preempt the maintenance activity, continue issuing the **refresh spe-standby** followed by **status system** until the status system form shows that the Standby SPE is labeled “standby.”

It **may** be necessary to issue **refresh spe-standby** multiple times to preempt all Standby SPE maintenance activity. If **refresh spe-standby** successfully completes five times without the Standby SPE becoming labeled “standby” on the status system form, wait 20 minutes. This **does not include** cases where the command completes with the G3MT terminal message line errors “Refresh not successful; use ‘display errors’ to check for STBY-SPE errors” or “Cannot interrupt Standby SPE while entering maintenance mode; please try later.”

Issue **refresh spe-standby** once more.

LED Interpretation

7

General

The lighting and unlighting of LEDs indicates the status of various maintenance components in the system. LEDS are located on the attendant console, on all circuit packs in the switch cabinets and, optionally, on customer-designated voice terminals. The following LEDS are included in the system:

- "Processor and Maintenance Circuit Pack LEDs"
- "Duplication Interface circuit pack LEDs"
- "Attendant console LEDs"
- "Cabinet power unit LEDs"
- "Power Distribution Unit LEDs"
- "Control and port circuit pack status LEDs"

Terminal Alarm Notification

Terminal Alarm Notification is an optional feature which displays several types of alarms on voice terminals with administered feature buttons or the attendant console. A maximum of ten digital and/or hybrid voice terminals may be used.

When an alarm occurs, the green status LED associated with the assigned button will be in a steady state. The lamp may be turned off by pressing the button associated with the lighted alarm lamp. If the lamp is turned off, and the alarm has not been resolved by the time maintenance reschedules testing, the green status LED will resume its steady state. The following alarms are displayed:

ac-alarm	Administered Connection Alarm: a locally administered connection (ADM-CONN) has a Major, Minor, or Warning alarm active.
pr-awu-alm	Auto Wakeup Journal Printer Alarm: the automatic wakeup journal printer has a Major, Minor, or Warning alarm active.
off-bd-alarm	DS1 or ATM Facility Alarm: an off-board Major, Minor, or Warning alarm is active on a DS1-BD, UDS1-BD, or ATM-TRK board.
trk-ac-alm	Facility Access Alarm: The facility access trunk test feature is activated.
major-alrm	Major Alarm: The system has logged a Major Alarm.
mj/mn-alrm	Major/Minor Alarm: The system has logged a Major or Minor Alarm.
pr-pms-alm	PMS Printer: The Property Management System printer has a Major, Minor, or Warning alarm active.
rs-alert	Reset-Alert: **reset system 2** or **3** has been performed.
cdr1-alrm	Call Detail Recording Alarm: The Primary CDR Link has a Major, Minor, or Warning alarm active.
cdr2-alrm	Call Detail Recording Alarm: The Secondary Link has a Major, Minor, or Warning alarm active.
pr-sys-alm	System Printer Alarm: The System Printer (SYS-PRNT) has a Major, Minor, or Warning alarm active.
pms-alarm	The Property Management System has a Major, Minor or Warning alarm active.

Processor and Maintenance Circuit Pack LEDs

The front panels of the Processor circuit pack and the Maintenance circuit pack are identical. Each has two groups of LEDs. One group indicates the status of the pack, and the other group (which includes Major, Minor, and Warning alarms) reflects maintenance conditions in the entire system, including the PPN and EPN cabinets. See Figure 7-1 on page 7-4.

- Red (alarm)—the system has detected a fault in this circuit pack.

  NOTE:
  Alarms on the PROCR, PR-MAINT, MEMORY, and PR-MEM MOs are indicated by the red LED on the Processor circuit pack.

- Green (test)—the system is running tests on this circuit pack.

  NOTE:
  On the Standby Processor circuit pack, green means that the Standby Switch Processing Element (SPE) is not refreshed (that is, it is in Maintenance or Down Mode).

  NOTE:
  On the Maintenance circuit pack, the green LED may blink very faintly once per second. This is the normal operating state of the Maintenance circuit pack. The faint blink is due to a once-per-second self-test executed by the Maintenance circuit pack.

- Yellow (busy)—this circuit pack is in use. In a high or critical reliability system, the yellow LED is always off for the Standby Processor and Memory circuit packs even when in Maint mode.
- MAJOR ALARMS (red)
- MINOR ALARMS (red)
- WRNG (warning) ALARMS (yellow)
- ACK (acknowledgment) (green)—indicates Major or Minor alarms have been reported to INADS
- EMERGENCY TRANSFER (red)—indicates emergency transfer has been invoked

  NOTE:
  If the AC power cord is unplugged from the control cabinet, the emergency transfer feature invokes, however the EMERGENCY TRANSFER LED (red) is not lit due to loss of AC power.

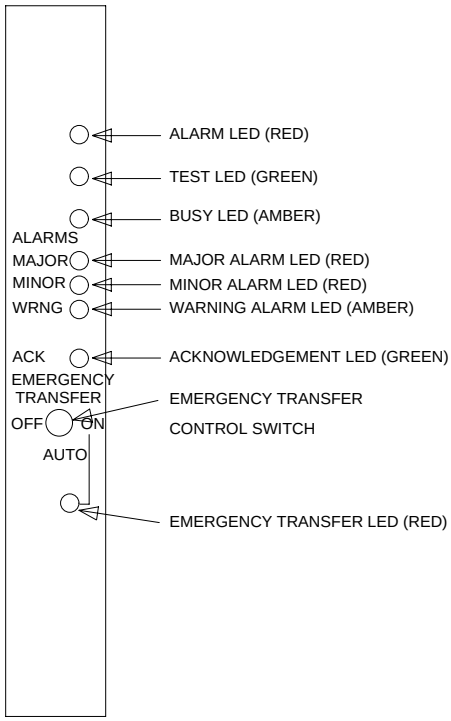

Figure 7-1. Indicators on Maintenance and Processor Circuit Packs

Duplication Interface circuit pack LEDs

In a High or Critical Reliability system, there are two Duplication Interface circuit packs. One is located in carrier A and one in carrier B of the PPN. Each circuit pack has two groups of LEDs. The top three have the traditional function of indicating the status of the pack. The LED located at the bottom of the faceplate directly beneath the SPE AUTO switch is labeled OVERRIDE. Under normal operating conditions, the SPE AUTO switch is in the AUTO (center) position (see Figure 7-2 on page 7-5). This means that the system controls which SPE is active. However, there will be times (during maintenance activity, for example) when you, the technician, may choose to manually override the SPE selection function. To override system selection of the Active processor, move the SPE Select switches one at a time on *both* Duplication Interface circuit packs from the AUTO position to either the “A” position or the “B” position. Thus, when both SPE Select switches have been moved to either “A” or “B,” the OVERRIDE LED turns red and lights steadily.

NOTE:
Failure to move both SPE Select switches to the same position causes the system to retain control of processor selection.

To return control of the SPE selection to the system, return the SPE Select switches on both Duplication Interface circuit packs to the AUTO position (one at a time to avoid accidentally selecting the other SPE). The OVERRIDE LED goes dark.

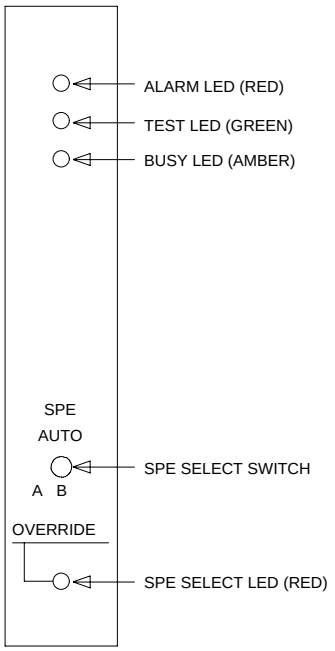

Figure 7-2. Duplication Interface Circuit Pack Indicators

Attendant console LEDs

The console has two red LEDs, labeled ALM and ACK, on the left side of the dial. The left LED lights steadily when there is a Major or Minor alarm at the switch cabinet. The right LED lights steadily if the alarm has been successfully reported to INADS. If the system is unable to report the alarm to INADS, the LED flashes; signaling the attendant to call INADS and report the alarm.

Cabinet power unit LEDs

For a description of Cabinet Power Unit LEDs, refer to “AC-POWER” for AC-Powered Systems and “DC-POWER” for DC-Powered Systems in Chapter 10, ‘‘Maintenance Object Repair Procedures’’.

Power Distribution Unit LEDs

For a description of Power Distribution LEDs, refer to “AC-POWER” for AC-Powered Systems and “DC-POWER” for DC-Powered Systems in Chapter 10, ‘‘Maintenance Object Repair Procedures’’.

Control and port circuit pack status LEDs

Each circuit pack has three LEDs on the front panel visible at the front of the carrier. On all circuit packs, except the TN736 Power Unit, the LEDs indicate:

1. Red (alarm) — If the circuit pack is communicating with the system, the system has detected a fault in this circuit pack. An on-board alarm for this circuit pack is displayed in the Alarm Log.

   The circuit pack also lights this LED when either the circuit pack has not yet initialized communication with the system or when the circuit pack loses contact with the system and stops functioning (circuit pack is said to be “in reset”). In these cases, there may not be an alarm in the Alarm Log. To determine if the red LED is lit because the circuit pack is not in contact with the system, issue the **list configuration board PCSS** command, where PCSS refers to the slot containing this circuit pack. If the system does not detect the circuit pack, this command returns “Identifier not assigned” or “no board.”

   If the circuit pack has just been inserted, the system may still be initializing the circuit pack. If, after 5 minutes, the circuit pack still has not initialized communications with the system, check the MO for any special instructions (for example, EPN Maintenance circuit pack can stop EXP-INTF circuit pack from initializing). If the MO does not provide the needed information, perform the following steps:

   - Check the Error Log for TONE-BD and TDM-BUS errors. Enter **test tdm P** where P is the port network containing the relevant slot. Refer to” Restarting Nonfunctioning Port Circuit Packs” in Chapter 10, ‘‘Maintenance Object Repair Procedures’’ in the general description of the “TDM-BUS”. Enter **test tone-clock PC**, where P is the network containing the relevant slot, and C is the carrier containing the relevant slot. Follow appropriate sections for any “TONE-BD” and “TDM-BUS” errors.
   - Reseat the suspect circuit pack.

   WARNING:
   Reseating some circuit packs may be very destructive (for example, Control Carrier circuit packs.)

   Wait 5 minutes. Then issue **list configuration board PCSS**. If the result indicates that the system still has not registered the circuit pack, go to the next step.

   - Try to insert the circuit pack into a different slot and try to insert a different circuit pack into the suspect slot (provided the maintenance documentation for this circuit pack does not warn against either of these actions).

- If the system seems to be functioning correctly, but the circuit pack does not start communicating with the system, replace the circuit pack.

2. Green (test)—the system is running tests on this circuit pack.
3. Yellow (busy)—indicates that the circuit pack is in use.

NOTE:
A port circuit pack also lights its red LED when it performs initialization tests (for example, when the circuit pack is initially inserted into the system). If all initialization tests pass, the red LED is turned off. If any initialization tests fail, the red LED remains lighted and the circuit pack is not placed into service.

Packet circuit packs such as the TN556 ISDN BRI-Line and TN570 Expansion Interface perform extensive initialization tests and light both the red and green LEDs during that testing.

During the various states of operation (start-up testing, normal operation, circuit failure, and so forth) circuit pack status LED indications appear as shown in Table 7-1.

Table 7-1. Circuit Pack Status LEDs

Equipment Type	LED	Description
Port Circuit Packs	Red	On briefly during power up, circuit pack reseating, resetting, and system reset. Steadily on if circuit pack fails start-up test or fails while in use. Off during normal operation.
	Green	Briefly on during circuit pack testing following power up, circuit pack reseating, and system reset. On during periodic, scheduled, and system technician demanded testing. Off during normal operation.
	Yellow	On when any port in the circuit pack is in use, otherwise, off. The yellow LED on the TN771 Maintenance/Test circuit pack may blink. This has special meaning for systems using Packet Bus. Refer to “Packet Bus” for more information.

Continued on next page

Table 7-1. Circuit Pack Status LEDs — *Continued*

Equipment Type	LED	Description
Control Circuit Packs	Red	On briefly during power up and system reset. Steadily on if circuit pack fails start-up test or fails while in use. Off during normal operation.
	Green	On briefly during board testing following power up and system reset. Also on during periodic, scheduled, and system technician-demanded testing. Off during normal operation.
	Yellow	Network Control ■ Lit when one of the data channels is in use ■ On the TN777B Network Control circuit pack, a 4th yellow LED with the label “Card in use” is lit when the translation card is in use. Processor ■ Lit during processor initialization. Lit steady on the Active SPE and off during normal operation on the Standby SPE. Memory. ■ Lit during system initialization (stays lit until Emergency Transfer is turned off). Lit steady on the Active SPE and off during normal operation on the Standby SPE. Packet Control ■ Lit when at least one Packet Control is in use. Packet Control LEDs do not light up (not even for the **test led** command) if the packet feature is not enabled on the Systems-Parameters Maintenance screen. Tone Detector/Generator ■ Slow blinking when clock is in use. Otherwise, off. Processor Interface ■ Lit when one (or more) channels (links) is in use. Otherwise, off. Duplication Interface ■ Lit steady on the Active SPE and dark during normal operation on the Standby SPE. Exception: Duplication Interface Circuit Pack A has the yellow LED lit steady if Tone/Clock Circuit Pack 1B is active, regardless of which SPE is active and which is standby.

Maintenance Commands and Trouble-Clearing Aids

8

For Maintenance Objects and Maintenance Commands for the DEFINITY Wireless Business System (DWBS), refer to the DWBS maintenance documentation.

This chapter provides additional trouble-clearing information for resolving both system-alarmed and user-reported troubles. This chapter supplements the information found in Chapter 10, ‘‘Maintenance Object Repair Procedures’’. The information consists of using the maintenance commands as trouble-clearing aids. The maintenance commands are used to control, test, and obtain information associated with maintenance objects (MOs). The commands require the use of the administration terminal or remote Initialization and Administration System (INADS) interface (a valid login and password to perform maintenance are required).

In this chapter, the commands are identified and organized into categories, then each command is described individually.

busyout access-endpoint

This command is destructive.

This command busies out a specified access endpoint.

Action/ Object	Qualifier	Qualifier Description	Logins	Defaults	Feature Interactions
busyout access-endpoint	extension	Extension number of access endpoint (per dial-plan) Examples: **busyout access-endpoint 25012** **busyout access-endpoint 77868**	init inads craft nms	none	See below

Feature Interactions

- If there is an active call on the specified access endpoint, this command causes the call to drop.

Output

The following example shows the output for **busyout access-endpoint 22502** and assumes that access endpoint ports for extension 22502 are in cabinet 1, carrier C, slot 11, circuit 1 to 6. The responses display on a test-by-test basis with one line of data for each test result.

```
busyout access-endpoint 22502                        SPE A

                           COMMAND RESULTS

  Port     Maintenance Name  Alt. Name   Result       Error Code
  01C1101    WAE-PORT        22502       PASS
  01C1102    WAE-PORT        22502       PASS
  01C1103    WAE-PORT        22502       PASS
  01C1104    WAE-PORT        22502       PASS
  01C1105    WAE-PORT        22502       PASS
  01C1106    WAE-PORT        22502       PASS


Command Successfully Completed
```

Field descriptions

`Port`	Port address (cabinet-carrier-slot-circuit)
`Maintenance Name`	Name of maintenance object (WAE-PORT = wideband access endpoint; TIE-DS1 = single port access endpoint)
`Alt. Name`	The alternate way of identifying the maintenance object - the extension number of the access endpoint.
`Result`	Test result: Pass, Fail, Abort
`Error Code`	Numeric code explaining why the release failed or aborted. Refer to the detailed list of the codes by test number for each MO.

busyout board

This command puts all the ports associated with the specified access endpoint in a maintenance busy (craft busy) state. No periodic or scheduled tests are performed on the busied out access endpoint ports until they are released. When the access endpoint ports are maintenance busy, the access endpoint is removed from active service on the switch, meaning that no call processing activity can include the busied objects because terminals on the administered ports do not receive dial-tone. Warning alarms are generated on each busied out port in the access endpoint. The **release access-endpoint** command returns all the ports associated with the specified access endpoint to operation.

WARNING:
This command is service disrupting and may cause extraneous alarms.

Action/Object	Qualifier	Qualifier Description	Logins	Defaults	Feature Interactions
busyout board	location	Board address (**PCSSpp**) Examples: **busyout board 01c11** **busyout board 02c15**	init inads craft	none	none

Output

The following example shows the output from the **busyout board 1c07** command, and assumes that board in cabinet 1, carrier c, slot 7 is an analog board with three administered ports. The responses display on a test-by-test basis with one line of data for each test result.

```
busyout board 01C07                              SPE A

                            COMMAND RESULTS

  Port    Maintenance Name  Alt. Name   Result       Error Code
  01C07     ANL-BD                      PASS
  01C0702   ANL-LINE                    PASS
  01C0701   ANL-LINE         51001      PASS
  01C0703   ANL-LINE                    PASS


Command successfully completed
```

Field descriptions

`Port`	Port address (cabinet-carrier-slot-circuit)
`Maintenance Name`	The name of maintenance object
`Alt. Name`	Alternate way to identify maintenance objects.

If the Object is	The field contains
station	extension
trunk	*xxx/yyy* (*xxx* = trunk group, *yyy* = member)
private CO line	*P/xxx* (*xxx* = private CO line group number)

`Result`	Test result: Pass, Abort, or Fail
`Error Code`	Numeric code explaining why the release failed or aborted. Refer to the detailed list of the codes by test number for each MO.

busyout cdr-link

This command busyouts a maintenance object associated with the specified call detail recording (cdr) link.

Action/ Object	Qualifier	Qualifier Description	Logins	Default	Feature Interactions
busyout cdr-link	***link-id***	Link identifier (primary or secondary) Examples: **busyout cdr-link primary** **busyout cdr-link secondary**	init inads craft nms	Primary	None

Output

The following example shows the output from **busyout cdr-link primary**.

```
busyout cdr-link primary                          SPE A
                            COMMAND RESULTS

  Port    Maintenance Name  Alt. Name   Result       Error Code
  1        CDR-LNK                      PASS

Command successfully completed
```

Field descriptions

`Port` — Port address (cabinet-carrier-slot-circuit); 1 = primary, 2 = secondary link

`Maintenance Name` — The name of maintenance object

`Alt. Name` — Alternate way to identify maintenance objects.

If the Object is	The field contains
station	extension
trunk	*xxx/yyy* (*xxx* = trunk group, *yyy* = member)
private CO line	*P/xxx* (*xxx* = private CO line group number)

`Result` — Test result: Pass, Abort, or Fail

`Error Code` — Numeric code explaining why the release failed or aborted. Refer to the detailed list of the codes by test number for each MO.

busyout data-module

This command puts the specified data module in a maintenance busy state, even uninstalled data modules. No periodic or scheduled tests is performed on the busied out data module or data channel until it is released and no call processing can be executed on the data modules or over the data channels. Warning alarms are generated (error type 18) on each maintenance object busied out, so that INADS can access the state of the objects. The **release data module** command returns the specified data module (or data channel) to operation.

On duplicated systems, a busyout of a Network Control Data Channel (DATA-CHL) or a Processor Interface Port Data Channels (PI-PT) are preserved across SPE interchanges. The data channel extension must be released before the data channel can be brought back into service.

Action/Object	Qualifier	Qualifier Description	Logins	Defaults	Feature Interactions
busyout data-module	extension	Extension number (per dial-plan) Example: **busyout data-module 31300**	init inads craft nms	None	None

Output

The following example shows the output from **busyout data-module 300**.

```
busyout data-module 300                          SPE A

                            COMMAND RESULTS

  Port    Maintenance Name  Alt. Name   Result       Error Code
  01C1103   DIG-LINE         300         PASS

Command successfully completed
```

Field descriptions

`Port`	Port address (cabinet-carrier-slot-circuit) or the data channel number
`Maintenance Name`	The name of maintenance object
`Alt. Name`	Alternate way to identify maintenance objects.

If the Object is	The field contains
station	extension
trunk	*xxx/yyy* (*xxx* = trunk group, *yyy* = member
private CO line	*P/xxx* (*xxx* = private CO line group number)

`Result`	Test result: Pass, Abort, or Fail
`Error Code`	Numeric code explaining why the release failed or aborted. Refer to the detailed list of the codes by test number for each MO.

busyout journal-printer

This command places the maintenance object associated with a specified pms-log or wakeup-log link in a maintenance busy state. No periodic or scheduled tests are performed on the busied out maintenance object until it is released. Also, no activity occurs over the links (for example, no data is transferred to the printer) and the link drops. Warning alarms are generated (Error type 18) on each busied out maintenance object, so that INADS can access object status. The **release journal-printer** command will return the object to operation.

A link is comprised of several components: a far-end data module, a simulated data channel on a PKTINT board, a manager that initiates and maintains the link, and a controller/protocol that services the link. A controller/protocol is usually a transient process that exists for as long as the link is up. A link is considered up if a physical connection is established. A link can be considered to be up while no useful work can be performed over it, in this case the link is insane and should be torn down. These links provide asynchronous data connections from the switch to peripherals.

For general information on journal printer links, see ''busyout pms-link''.

For information on what a journal printer is and does, see ''status journal-link''.

Action/ Object	Qualifier	Qualifier Description	Logins	Default	Feature Interactions
busyout journal-printer	***pms-log***	Link to pms (in output, port name for pms link =1)	init inads craft nms	None	See below
	wakeup-log	Link to the wakeup logging facility (in output, port name = 0)			
		Examples: **busyout journal-printer pms-log** **busyout journal-printer wakeup-log**			

Feature Interactions

Maintenance of a component on a link sometimes interferes with the maintenance of the link itself. For example, maintenance can put a link component in a busy state causing link set-up to fail. Frequent attempts at re-setup of a link may delay the recovery of a faulty component, due to the maintenance test only taking place when the component is idle. Disable the attempted re-setup of a link with **busyout** and the link remains intact. If the link is already down, **busyout** stops periodic re-setup attempts on the link.

Output

The following shows the output for **busyout journal-printer wakeup-log**.

```
busyout journal-printer wakeup-log                    SPE A
                                  COMMAND RESULTS

   Port    Maintenance Name  Alt. Name   Result       Error Code
   0       JRNL-LINK                     PASS
```

Field descriptions

`Port`	Physical object port address: `0` = wakeup log, `1` = pms log
`Maintenance Name`	The name of the maintenance object
`Alt. Name`	Not applicable
`Result`	Test result: Pass, Abort, Fail
`Error Code`	Numeric code explaining why the release failed or aborted. Refer to the list of the codes by test number for each MO.

busyout link

This command places maintenance objects associated with a specified link in a maintenance busy state. No periodic or scheduled tests are performed on the busied out maintenance objects until they are released. The link is marked out of service and is inaccessible to call processing. Warning alarms (error type 18) are generated on each busied out maintenance object, so that INADS can determine the state of the objects. The **release link** command reactivates the objects.

Action/ Object	Qualifier	Qualifier Description	Logins	Defaults	Feature Interactions
busyout link	link-id	Processor Interface circuit pack 1a1 or 1b1 = 1 – 4 Processor Interface circuit pack 1a2 or 1b2 = 5 – 8 Examples **busyout link 1**	init inads craft	none	none

Output

The following example shows the output from the **busyout link 1** command. The responses display on a test-by-test basis with one line of data for each test result.

```
busyout link 1                                SPE A

                            COMMAND RESULTS

  Port    Maintenance Name  Alt. Name   Result       Error Code
  01C0301   PI-LINK                     PASS

Command successfully completed
```

Field descriptions

`Port`	Port address represents link-id
`Maintenance Name`	The name of the busied out maintenance object
`Alt. Name`	Not applicable
`Result`	Test result: Pass, Abort, Fail
`Error Code`	Numeric code explaining why the release failed or aborted. Refer to the detailed list of codes by test number for each MO.

busyout mis

This command places the management information system in the maintenance busy state. No periodic or scheduled maintenance is performed until it is released. When the object is busied out no call processing activity may be performed over the link. A warning alarm (error type 18) is generated on the busied out mis, so that INADS can determine its state. The command, **release mis**, reactivates the busied out mis.

Action/Object	Qualifier	Qualifier Description	Logins	Defaults	Feature Interactions
busyout mis		Example: **busyout mis**	init inads craft cust rcust	None	None

Output

The following example shows the output from the **busyout mis** command. The responses display on a test-by-test basis with one line of data for each test result.

```
busyout mis                                  SPE A

                         COMMAND RESULTS

  Port    Maintenance Name  Alt. Name   Result       Error Code
          MIS                           PASS

Command Successfully Completed
```

Field descriptions

`Port`	Not applicable
`Maintenance Name`	Name of busied out maintenance object: `MIS`
`Alt. Name`	Not applicable
`Result`	Test result: Pass, Abort, Fail
`Error Code`	Numeric code explaining why the release failed or aborted. Refer to the detailed list of codes by test number for each MO.

busyout modem-pool

This command places specified installed and uninstalled modem pool groups or group members in the maintenance busy state. No periodic or scheduled tests are performed on the busied out modem pool groups or group members until they are released. When the object is maintenance busy it is deactivated (no call processing activity may include the busied object). Busyout a single group by specifying the group and member number. Busyout all members in a modem pool group can be busied out by specifying the modem pool group number. Warning alarms (error type 18) are generated on each busied out maintenance object, so that INADS can determine the state of the objects. Use **release modem-pool** to reactivate the specified modem pool group or group member.

Action/ Object	Qualifier	Qualifier Description	Logins	Default	Feature Interactions
busyout modem-pool	group member	Group number = 1 – 5 Member number = 1 – 32 (a member is a pair of analog and digital line ports — two pair for integrated pool modem. Examples **busyout modem-pool 1** **busyout modem-pool 4/3**	init inads craft	none	none

Output

```
busyout modem-pool 1                                SPE B

                          COMMAND RESULTS

  Port     Maintenance Name  Alt. Name   Result       Error Code

  01C0701    MODEM-PT                     PASS
  01C0703    MODEM-PT                     PASS
```

Field descriptions

`Port`	Port address (cabinet-carrier-slot-circuit)
`Maintenance Name`	Name of busied out maintenance object: `MODEM-PT`
`Alt. Name`	Not applicable
`Result`	Test result: Pass, Abort, Fail
`Error Code`	Numeric code explaining why the release failed or aborted. Refer to the detailed list of codes by test number for each MO.

busyout packet-control

This command places the packet-control circuit pack in a maintenance busy state, and tears down each point-to-point signaling link that terminates on this packet-control. No periodic or scheduled test is performed on the busied out packet-control until it is released. A warning alarm (error type 18) is generated on the busied out packet-control, so that INADS can determine the state of the object. The **release packet-control** command reactivates the board and initiates recovery on all point-to-point signaling links terminated on this packet-control.

Action/ Object	Qualifier	Qualifier Description	Logins	Defaults	Feature Interactions
busyout packet-control	location	Applies to duplicated configurations only - a carrier that contains packet-control in the system. Valid locations = 1A or 1B. Examples **busyout packet-control 1A** **busyout packet-control 1B**	init inads craft	simplex systems (optional) = cabinet 1, carrier A duplex systems = cabinet 1, carrier of choice.	See below

Feature Interactions

- In a duplicated system, the packet-control busyout of standby process complex is not allowed.
- When the packet-control in the active control complex is busied out, all connectivity across the Packet Bus is severed. Thus, all ISDN-BRI point-to-point signaling links that have been established through the active packet-control are torn down by the **busyout packet-control** command. The **release packet-control** command re-establishes all Packet Bus connectivity.

Output

The following example shows the output from the **busyout packet-control 1A** command. The responses display on a test-by-test basis with one line of data for each test result.

```
busyout packet-control 1A                          SPE A

                            COMMAND RESULTS

  Port    Maintenance Name  Alt. Name   Result       Error Code

  1A       PKT-CTRL                     PASS

Command successfully completed
```

Field descriptions

Port	Port address (cabinet-carrier)
Maintenance Name	Type of busied out maintenance object (PKT-CTRL).
Alt. Name	Not applicable
Result	Test result: Pass, Abort, Fail
Error Code	Numeric code explaining why the release failed or aborted. Refer to the detailed list of codes by test number for each MO.

busyout pms-link

This command places all maintenance objects associated with a property management system link in the maintenance busy state. No periodic or scheduled maintenance is performed on the busied out maintenance objects until they are released. When the object is maintenance busy the object is deactivated (no call processing activity may include the busied object) and the link is dropped. Warning alarms (error type 18) are generated on each busied out maintenance object, so that INADS can determine the state of the objects. The **release pms link** command reactivates the busied out objects on the link.

These links provide asynchronous data connections from switches to peripherals; they are composed of a:

- Far-end data module
- Simulated data channel on a NETCON board
- Manager that initiates and maintains the link
- Controller/protocol that services the link

For information on PMS, see the description of the "status pms-link" command.

Action/ Object	Qualifier	Qualifier Description	Logins	Defaults	Feature Interactions
busyout pms-link		Example: **busyout pms-link**	init inads craft	none	See below

Feature Interactions

Maintenance of a particular component on a link sometimes interferes with the maintenance of the link itself. For example, maintenance can put a link component in a busy state causing link set-up to fail. Frequent attempts at re-setup of a link may delay the recovery of a faulty component, due to the maintenance test of a component only taking place when the component is idle. Therefore, disable the attempted re-setup of a link with the busyout command and the link remains intact. If the link is already down, the busyout command stops periodic re-setup attempts on the link.

Output

The following example is a display of the **busyout pms-link** command.

```
busyout pms-link                                SPE A

                            COMMAND RESULTS

  Port    Maintenance Name  Alt. Name   Result       Error Code
            PMS-LINK                     PASS

Command Successfully Completed
```

Field descriptions

`Port`	Always blank
`Maintenance Name`	Name of maintenance object: `PMS-LINK`
`Alt. Name`	Not applicable.
`Result`	Test result: Pass, Abort, Fail
`Error Code`	Numeric code explaining why the release failed or aborted. Refer to the detailed list of codes by test number for each MO.

busyout port

This command places the specified port on a circuit pack in a maintenance busy state. No periodic or scheduled tests are performed on the busied out port until it is released. When the object is maintenance busy, it is deactivated (no call processing activity may include the busied object). Warning alarms (error type 18) are generated on each busied out maintenance object, so that INADS can determine the state of the objects. The **release port** command reactivates the administered port on a circuit pack at a specified location.

Action/ Object	Qualifier	Qualifier Description	Logins	Defaults	Feature Interactions
busyout port	location	Port location: **PPsspp** Examples: **busyout port 01c1101** **busyout port 02c1501**	init inads craft	none	see below

Output

The following example is a display of the **busyout port** command.

```
busyout port 01C0701                                SPE A

                            COMMAND RESULTS

  Port    Maintenance Name  Alt. Name   Result       Error Code
  01C0701   ANL-LINE                     PASS

Command successfully completed
```

Field descriptions

`Port` — Port address (cabinet-carrier-slot-circuit)

`Alt. Name` — Alternate way to identify maintenance objects.

If the Object is	The field contains
station	extension
trunk	*xxx/yyy* (*xxx* = trunk group, *yyy* = member)
private CO line	*P/xxx* (*xxx* = private CO line group number)

`Maintenance Name` — Type of busied out maintenance object.

`Result` — Test result: Pass, Abort, Fail

`Error Code` — Numeric code explaining why the release failed or aborted. Refer to the detailed list of codes by test number for each MO.

busyout pri-endpoint

This command places all PRI endpoint ports (B-channels) associated with the specified PRI endpoint in a maintenance busy (system technician busy) state. No periodic or scheduled tests are performed on the busied out PRI endpoint ports until they are released. When the PRI endpoint port is maintenance busy it is deactivated (no call processing activity may include the busied object). Warning alarms are generated on each busied out port. The **release pri-endpoint** command reactivates all ports (B-channels) associated with the specified PRI endpoint extension and the switch attempts to negotiate with the far-end PRI terminal adapter to reactivate each PRI endpoint port (B-channel).

Action/ Object	Qualifier	Qualifier Description	Logins	Defaults	Feature Interactions
busyout pri-endpoint	extension	PRI endpoint extension number Examples: **busyout pri-endpoint 25012** **busyout pri-endpoint 77868**	init inads craft nms	none	If active calls resides on specified PRI endpoints, the busyout command drops the call. Once the PRI endpoint is maintenance-busy, call attempts from far-end PRI terminal adapters are denied with a cause value 17.

Output

```
busyout pri-endpoint 22501                          SPE A

                            COMMAND RESULTS

  Port    Maintenance Name  Alt. Name   Result       Error Code
  01B2001   PE-BCHL          22501       PASS
  01B2002   PE-BCHL          22501       PASS
  01B2003   PE-BCHL          22501       PASS
  01B2004   PE-BCHL          22501       PASS
  01B2005   PE-BCHL          22501       PASS
  01B2006   PE-BCHL          22501       PASS

Command Successfully Completed
```

Field descriptions

`Port`	Port address (cabinet-carrier-slot-circuit)
`Maintenance Name`	Type of busied out maintenance object: `PE-BCHL`
`Alt. Name`	Extension number of PRI endpoint
`Result`	Test result: Pass, Fail, Abort
`Error Code`	Numeric code explaining why the release failed or aborted. Refer to the detailed list of codes by test number for each MO.

busyout sp-link

busyout sp-link

The **busyout sp-link** command puts the system printer link into a maintenance busy state. Placing the system printer link in a busyout state prevents access to the system printer.

The system printer link is a link from the switch to an external printer. This link is created by administering the system printer extension and setting up a call to the system printer.

The following is an example of the results of **busyout sp-link**:

```
busyout sp-link

                              COMMAND RESULTS

  Port      Maintenance Name  Alt. Name     Result           Error Code

            SYS-PRNT                         PASS
```

For more information, see **Busyout** and **Release.**

busyout spe-standby

This command raises the Fault Severity Level of the Standby SPE (see reference 5) of the standby Switch Processing Element (SPE) by raising a Warning Off-board alarm against STBY-SPE. Because a Warning Off-board STBY-SPE alarm is defined to have the highest Fault Severity of all alarms the affect the health of an SPE (refer to the Reset System MUS), the chance that an SPE interchange will occur is diminished, but does not guarantee that an SPE interchange will not occur. Once the standby SPE is busied out, an SPE interchange occurs if the standby SPE is hard selected with the SPE Select switches or the active SPE goes into SPE down mode. This command also stops any activity currently executing on the standby SPE and disables memory shadowing to the standby SPE. Periodic and scheduled testing cannot start on the standby SPE while it is busied out. The busyout state of the standby SPE and the STBY-SPE Warning alarm are maintained across a reset system 1 (Warm restart) and a reset system 2 (Cold 2 restart) but are removed after all other levels of restart.

Action/ Object	Qualifier	Qualifier Description	Logins	Defaults	Feature Interactions
busyout spe-standby		Examples: **busyout spe-standby**	init inads craft	none	See below

Feature Interactions

- When a busyout of the standby SPE is performed, the fault severity level of the standby SPE is set to the highest possible value and memory shadowing is turned off. This is done to reduce the probability that the system switches to the standby SPE. However, in some cases a “spontaneous” (hard) interchange of the SPEs may still occur.
- This command can be used as a mechanism to turn off memory shadowing of the standby SPE.
- If the standby SPE is in poor health (less than optimum), memory shadowing can not be disabled, or communication to the standby is impossible a busyout of the standby SPE are still successful.

Output

The following example is a display of the **busyout spe-standby** command.

```
busyout spe-standby                                SPE A

                           COMMAND RESULTS

  Port    Maintenance Name  Alt. Name   Result       Error Code
  01B     STBY-SPE                       PASS

Command successfully completed
```

Field descriptions

Port	Standby SPE cabinet and carrier location (01A or 01B)
Maintenance Name	Always STBY-SPE
Alt. Name	Blank
Result	Test result: Pass, Abort, Fail
Error Code	Numeric code explaining why the release failed or aborted. Refer to the detailed list of codes by test number for each MO.

busyout station

This command places the installed and uninstalled administered voice terminal extension (station) in a maintenance busy state. No periodic or scheduled tests are performed on the busied out station until it is released. When the object is maintenance busy it is deactivated (no call processing activity can include the busied object). Warning alarms (error type 18) are generated on each busied out maintenance object, so that INADS can determine the state of the objects. The command, **release station**, reactivates the specified voice terminal extension.

Action/ Object	Qualifier	Qualifier Description	Logins	Defaults	Feature Interactions
busyout station	***extension***	Extension number (per dial-plan) Examples: **busyout station 10020** **busyout station 32770**	init inads craft	none	none

Output

The following example is a display of the **busyout station** command.

```
busyout station 1002                              SPE A

                            COMMAND RESULTS

  Port     Maintenance Name  Alt. Name   Result       Error Code
  01C1102   DIG-LINE                      PASS

Command successfully completed
```

Field descriptions

`Port`	Port address (cabinet-carrier-slot-circuit)
`Maintenance Name`	Type of busied out maintenance object
`Alt. Name`	Extension
`Result`	Test result: Pass, Fail, Abort
`Error Code`	Numeric code explaining why the release failed or aborted. Refer to the detailed list of codes by test number for each MO.

busyout tdm

This command places the specified tdm bus in a maintenance busy state. No periodic or scheduled tests are performed on the busied out bus until it is released. When the object is maintenance busy it is deactivated (no call processing activity may include the busied object). Warning alarms (error type 18) are generated on each busied out tdm bus, so that INADS can determine the state of the objects. The **release tdm** command reactivates the specified tdm bus.

Action/ Object	Qualifier	Qualifier Description	Logins	Defaults	Feature Interactions
busyout tdm	pn number bus	pn number = TDM bus Port Network number bus = “a” or “b” specifies desired half of TDM bus. Each 512 time slot TDM bus configures as two duplicate 256 time slot buses. This division allows duplication of control channels and dedicated tone time slots. “a” bus = the default control bus; “b” bus = the default tone bus. Examples: **busyout tdm 1a**	init inads craft	none	If a bus is busied out, no calls are torn down; no new calls are set up. Dedicated tone time slots must be moved to another bus (the other half of the duplicated bus) before a busyout of a particular bus is allowed.

Output

The following example is a display of the **busyout tdm** command.

```
busyout tdm port-network 1 bus a                        SPE A

                          COMMAND RESULTS

  Port    Maintenance Name  Alt. Name   Result       Error Code
  PN 01A  TDM-BUS                        PASS

Command successfully completed
```

Field descriptions

`Port`	Port address and associated TDM number and bus (PNA or PNB)
`Alt. Name`	Not applicable
`Maintenance Name`	Type of busied out maintenance object: `TDM-BUS`
`Result`	Test result: Pass, Abort, Fail
`Error Code`	Numeric code explaining why the release failed or aborted. Refer to the list of codes by test number for each MO.

busyout tone-clock

This command places the specified tone/clock in a maintenance busy state. No periodic or scheduled tests are performed on the busied out object until it is released. When the object is maintenance busy it is deactivated (no call processing activity may include the busied object). Warning alarms (error type 18) are generated on each tone clock circuit pack busied out, so that INADS can determine the state of the objects. The command, **release tone-clock**, reactivates the specified tone/clock.

Action/ Object	Qualifier	Qualifier Description	Logins	Defaults	Feature Interactions
busyout tone-clock	location	Physical location (**PC**) Examples: **busyout tone-clock 01c** **busyout tone-clock 03d**	init inads craft	1 (one)	none

Output

The following example is a display of the **busyout tone-clock** command.

```
busyout tone-clock 1a                              SPE A

                            COMMAND RESULTS

  Port    Maintenance Name  Alt. Name   Result       Error Code
  01A     TONE-PT                       PASS
  01A     TDM-CLK                       PASS
  01A     TONE-BD                       PASS

Command successfully completed
```

Field descriptions

`Port`	Tone/clock board address (cabinet-carrier)
`Maintenance Name`	Circuit pack name: `TONE-PT`, `TDM-CLK`, `TONE-BD`
`Alt. name`	Not applicable
`Result`	Test result: Pass, Abort, Fail
`Error Code`	Numeric code explaining why the release failed or aborted. Refer to the detailed list of codes by test number for each MO.

busyout trunk

This command places the specified installed or uninstalled trunk group or trunk group member in a maintenance busy state. No periodic or scheduled tests are performed on the busied out trunk groups or trunk group members until they are released. When the object is maintenance busy it is deactivated (no call processing activity may include the busied object). A single group member can be busied out by specifying the group and member number. All members in a trunk group can be busied out by specifying the trunk group number. Warning alarms (error type 18) are generated on each busied out maintenance object, so that INADS can access the state of the objects. The **release trunk** command reactivates the specified trunk group or group member.

NOTE:
If the user enters **busyout trunk <group number>/**, the lowest port-location in the group is busied out. **This is NOT recommended.**

Action/ Object	Qualifier	Qualifier Description	Logins	Defaults	Feature Interactions
busyout trunk	group member	Trunk group number (1–99) Number of a trunk within a trunk group (1 – 99) Examples: **busyout trunk 78** **busyout trunk 78/1**	init inads craft	none	none

Output

The following example is a display of the **busyout trunk** command.

```
busyout trunk 78/1                              SPE A

                          COMMAND RESULTS

  Port    Maintenance Name  Alt. Name   Result       Error Code
  01C1505   CO-TRK           78/01       PASS

Command successfully completed
```

Field descriptions

`Port`	Port address (cabinet-carrier-slot-circuit)
`Maintenance Name`	Type of busied out maintenance object.
`Alt. Name`	Alternate way to identify maintenance objects.

If the Object is	The field contains
station	extension
trunk	*xxx/yyy* (*xxx* = trunk group, *yyy* = member)
private CO line	*P/xxx* (*xxx* = private CO line group number)

`Result`	Test result: Pass, Abort, Fail
`Error Code`	Numeric code explaining why the release failed or aborted. See the detailed list of codes by test number for each MO.

cancel hardware-group

This command temporarily or permanently aborts the execution of a **test hardware-group** command. To resume testing, enter **resume hardware-group or test hardware group**.

Action/Object	Qualifier	Qualifier Description	Logins	Defaults	Feature Inter-actions
cancel hardware-group		Examples: **cancel hardware-group**	init inads	none	See below

Feature Interactions

- Scheduled and Periodic Maintenance

  When the **test hardware-group** command is entered, all activity related to scheduled background maintenance, periodic background maintenance, and data audits suspends for the duration of the **test hardware-group** command. All activity related to scheduled background maintenance, periodic background maintenance, and data audits restarts if the **test hardware-group** command is canceled.

- Status Hardware-group

  The **status hardware-group** command displays the state of a canceled **test hardware-group** command as `canceled`.

change circuit-packs

This command allows users to administer circuit packs that are inserted into the system port, expansion control, and switch node carriers. It is used to configure the system when circuit packs are not physically inserted.

Action/ Object	Qualifier	Qualifier Description	Logins	Defaults	Feature Interactions
change circuit-packs	cabinet number	Cabinet number of the circuit packs Examples: **change circuit-packs 1** **change circuit-packs 2**	init inads craft cust nms	1 (one)	none

Output

The following example shows the output from the **change circuit-packs 1** command (SCC) All five pages are shown here.

```
change circuit-packs 1                        Page   1 of   5

                         CIRCUIT PACKS
    Cabinet: 1                                Carrier: A
 Cabinet Layout: single-carrier          Carrier Type: processor
 Slot Code  Sfx  Name                      Slot Code  Sfx  Name
                                             11:
  01: TN570      EXPANSION INTF             12:
  02: TN767  B   DS1 INTERFACE              13:
  03:                                       14:
  04:                                       15:
  05:                                       16:
  06:
  07:
  08: TN556      BRI LINE
  09: TN754      DIGITAL LINE
  10: TN769      ANALOG LINE

  '#' indicates circuit pack conflict.
```

```
change circuit-packs 1                        Page   2 of   5

                CIRCUIT PACKS

    Cabinet: 1                                Carrier: B
 Cabinet Layout: single-carrier          Carrier Type: port
 Slot Code  Sfx  Name                      Slot Code  Sfx  Name
  00:                                       11:
  01: TN754      DIGITAL LINE               12:
  02: TN754      DIGITAL LINE               13:
  03: TN754      DIGITAL LINE               14:
  04: TN754      DIGITAL LINE               15:
  05: TN754      DIGITAL LINE               16:
  06: TN754      DIGITAL LINE               17:
  07: TN754      DIGITAL LINE               18:
  08: TN754      DIGITAL LINE               19:
  09: TN754      DIGITAL LINE               20:
  10: TN754      DIGITAL LINE

  '#' indicates circuit pack conflict.
```

```
change circuit-packs 1                      Page   3 of   5

                           CIRCUIT PACKS

    Cabinet: 1                                Carrier: C
 Cabinet Layout: single-carrier         Carrier Type: port
 Slot Code  Sfx  Name                    Slot Code  Sfx  Name
  00:                                     11: TN754    DIGITAL LINE
  01: TN748  C   TONE DETECTOR            12: TN753    DID TRUNK
  02:                                     13: TN742    ANALOG LINE
  03:                                     14: TN760  C   TIE TRUNK
  04: TN771  C   MAINTENANCE/TEST         15: TN747  B   CO TRUNK
  05: TN748  B   TONE DETECTOR            16: TN742    ANALOG LINE
  06: TN767      DS1 INTERFACE            17: TN556    BRI LINE
  07: TN742      ANALOG LINE              18: TN742    ANALOG LINE
  08: TN762  B   HYBRID LINE              19:
  09: TN742      ANALOG LINE              20: TN754    DIGITAL LINE
  10:

  '#' indicates circuit pack conflict.
```

```
change circuit-packs 1                      Page   4 of   5
                CIRCUIT PACKS
    Cabinet: 1                              Carrier: D
 Cabinet Layout: single-carrier         Carrier Type: port
 Slot Code  Sfx  Name                    Slot Code  Sfx  Name
  00:                                     11:
  01:                                     12: TN722  B   DS1 TIE TRUNK
  02:                                     13: TN760  C   TIE TRUNK
  03: TN750  B   ANNOUNCEMENT             14:
  04:                                     15: TN754    DIGITAL LINE
  05:                                     16:
  06:                                     17: TN742    ANALOG LINE
  07: TN747  B   CO TRUNK                 18:
  08: TN753      DID TRUNK                19:
  09: TN742      ANALOG LINE              20:
  10:
  '#' indicates circuit pack conflict.
```

```
change circuit-packs 1                      Page   5 of   5

                CIRCUIT PACKS

    Cabinet: 1                                Carrier: E
 Cabinet Layout: single-carrier          Carrier Type: port
 Slot Code  Sfx  Name                      Slot Code  Sfx  Name
                                             11:
  01: TN570      EXPANSION INTF             12:
  02: TN747  B   CO TRUNK                   13:
  03: TN747  B   CO TRUNK                   14:
  04: TN747  B   CO TRUNK                   15:
  05: TN747  B   CO TRUNK                   16:
  06: TN747  B   CO TRUNK                   17:
  07:                                       18:
  08:                                       19:
  09:                                       20:
  10:

  '#' indicates circuit pack conflict.
```

Field descriptions

Cabinet	Administered cabinet number
Cabinet Layout	Type of cabinet (single-carrier)
Carrier	In-use cabinet carrier
Carrier Type	Carrier function (port, processor, or expansion control)
Slot	Slot numbers (0 - 21).
Code	Circuit pack code (TN number) to identify the circuit pack type
Sfx	Lists the suffix, if applicable
Name	Alphanumeric circuit pack name

change firmware download

change firmware download

Use **change firmware download** to view the following screen.

```
change firmware download                                        Page   1 of    1
                                   FIRMWARE DOWNLOAD
   Source Board Location: _____
Firmware Image File Name: ____________________________________________
       Target Board code: ______  Suffix: __  Firmware Vintage: ___
       Schedule Download? y    Remove Image File After Successful Download? n
   Start Date/Time: __/__/____  __:__    Stop Date/Time: __/__/____  __:__

    Target          Target          Target          Target          Target
   Location        Location        Location        Location        Location
 1. _____        11. _____       21. _____       31. _____       41  _____
 2. _____        12. _____       22. _____       32. _____       42  _____
 3. _____        13. _____       23. _____       33. _____       43. _____
 4. _____        14. _____       24. _____       34. _____       44. _____
 5. _____        15. _____       25. _____       35. _____       45. _____
 6. _____        16. _____       26. _____       36. _____       46. _____
 7. _____        17. _____       27. _____       37. _____       47. _____
 8. _____        18. _____       28. _____       38. _____       48. _____
 9. _____        19. _____       29. _____       39. _____       49. _____
10. _____        20. _____       30. _____       40. _____       50. _____

Enter 5 character board number; cabinet(1-30):carrier(A-E):slot(0-20)
12345678911234567890123456789012345678901234567890123456789012345678901234567890
         0         2         3         4         5         6         7         8
```

Field descriptions

`Source Board Location`	The C-LAN board location (ppcss) where the firmware image resides.
`Firmware Image File Name`	Enter the firmware image file name to download. Firmware image file names can be from 1 to 40 alphanumeric characters (i.e., printable characters, including blanks).
`Target Board Code`	This is the TN-code of the target board to be downloaded.
`Suffix`	This is the suffix of the target board to be downloaded.
`Firmware Vintage`	This is only displayed when a download is in progress or after a download.
`Schedule Download?`	This field indicates whether the download will take place immediately or at some future time. If “n” is entered, the download will commence when the form is successfully submitted. If “y” is entered, the Start Date/Time and Stop Date/Time fields are displayed to schedule the download.
`Remove Image File After Successful Download?`	This field indicates whether the firmware image file on the source board will be automatically removed following the successful download of all specified target boards. If set to “y” and all boards were successfully downloaded, the image file will be removed and the file system on the source board will be disabled.
`Start Date/Time`	This field only appears if the Schedule Download field is set to “y”. The Date portion of the field will be of the format mm/dd/yyyy (mm=2 digits for the month, dd=2 digits for the day and yyyy = 4 digits for the year). The Time portion of the field will be of the format hh:mm (hh=2 digits for the hour and mm = 2 digits for the minutes).
`Stop Date/Time`	This field only appears if the Schedule Download field is set to “y”. The Date portion of the field will be of the format mm/dd/yyyy (mm=2 digits for the month, dd=2 digits for the day and yyyy = 4 digits for the year). The Time portion of the field will be of the format hh:mm (hh=2 digits for the hour and mm = 2 digits for the minutes). If this field is left blank, the download will continue until completion.
`Target Location`	These fields contain the target board locations (ppcss) of the boards that will receive the download file image.

change ip-network-region

change ip-network-region x

“x” is between 1 to 250 for r and 80 for si/csi/d.

Fields are automatically filled in for the same region with the codec selected on the first page of this screen. For example, for change ip-network-region 1, the fields in row 1, column 1 are populated with the codec selected on the first page. If ip-network-region 9 is administered with connectivity with ip-network-region 11 first and then ip-network-region 11 appears, the fields are automatically populated to show connectivity with ip-network-region 9.

See *Avaya MultiVantage Administrator's Guide* for field definitions for this screen.

Output

```
change ip-network-region 1                                      Page   1 of   2
                                IP Network Region
Region: 1
        Name:

Audio Parameters                  Direct IP-IP Audio Connections? n
   Codec Set: 1                             IP Audio Hairpinning? y
    Location: 3
UDP Port Range                                         RTCP Enabled? y
         Min: 2048                RTCP Monitor Server Parameters
         Max: 65535                Use Default Server Parameters? n
                                              Server IP Address: ___.___.___.__
_
DiffServ/TOS Parameters                                 Server Port: _____
 Call Control PHB Value:                 RTCP Report Period(secs): __
   VoIP Media PHB Value:
          BBE PHB Value:           Resource Reservation Parameters
                                                     RSVP Enabled? y
             802.1p/Q Enabled? n             RSVP Refresh Rate(secs):
 Call Control 802.1p Priority:       Retry upon RSVP Failure Enabled? y
   VoIP Media 802.1p Priority:                    RSVP Profile:
guaranteed-service
                  802.1Q VLAN:
```

```
change ip-network-region 10                                          Page 2 of 2

                       Inter Network Region Connection Management

Region                                 (Group of 32)
       1 2 3 4 5 6 7 8 9 0 1 2 3 4 5 6 7 8 9 0 1 2 3 4 5 6 7 8 9 0 1 2
001-032                  4
033-064
065-080
```

This screen appears when the IP Stations, the H.323 Trunks, and the Remote Office fields on the System-Parameters Customer-Options screen are enabled.

Field descriptions

`Region` Blank indicates there is no connectivity between these network regions.

1 - 7 indicates the preferred codec set that you should use between these network regions.

change synchronization

Each system contains a hierarchy of sources used for timing synchronization. DS1 inputs to the external stratum 3 clock affect stratum 3 synchronization hierarchy. Primary and secondary fields reflect Stratum 4 synchronization. If all fields are blank, the tone clock board within each PN provides timing for that PN.

Action/Object	Qualifier	Qualifier Description	Logins	Defaults	Feature Interactions
change synchronization		Examples: **change synchronization** **change synch**	init inads craft cust rcust bcms	none	DS1 interface, BRI trunk, or UDS1 board selected as a primary or secondary synch source cannot be removed on the DS1 circuit pack administration form or the regular circuit pack administration form.

Output

The following example shows the output for the **change synchronization** command. “4” was entered in the stratum field.

```
change synchronization                      Page   1 of   1

             SYNCHRONIZATION PLAN

      SYNCHRONIZATION SOURCE (circuit pack location)
          Stratum: 4
          Primary: _____     Secondary: _____
Location  Name    Slip        Location  Name    Slip

 NOTE: DS1 and BRI trunk source will result in stratum 4, type II synchronization
```

The following output example shows the output for the **change synchronization** command. “3” was entered in the stratum field.

```
change synchronization                      Page   1 of   1

             SYNCHRONIZATION PLAN

      SYNCHRONIZATION SOURCE (DS1 circuit pack location)
            Stratum: 3
       Port Network: 1
```

Field descriptions

`Stratum`	Current synchronization stratum (3, 4)
`Primary`	First choice system synchronization source (blank entry = no synchronization); field valid only if stratum 4 synchronization is specified.
`Secondary`	Second choice system synchronization source (blank = no synchronization); valid if stratum 4 synchronization selected
`Location`	Circuit pack location of all administered DS1 circuit packs (port network, carrier, and board slot)
`Name`	User-defined name for the DS1 circuit pack (blank = no user-defined name assigned)
`Slip`	If DS1 circuit pack has slip alarm, `y`; if not, `n`.
`Port Network`	Display-only field specifying the port network that supplies synchronization through the tone clock circuit pack (valid for stratum 3 synchronization)

change system-parameters maintenance

This command specifies and displays scheduled maintenance operations and maintenance support functions. It also activates and deactivates INADS alarm origination during repairs. To deactivate alarm origination:

1. Make a note of the current entries in the Alarm Origination and CPE Alarm fields so you can restore them later.
2. Change the `Alarm Origination to OSS Numbers` field to “neither.”
3. Change the `CPE Alarm Activation Level` field to **none**.
4. If daily scheduled maintenance must remain idle during a maintenance procedure, set the `Start Time` field to a time after the session ends. If daily Scheduled Maintenance is running and needs to be deactivated, set the `Stop Time` field to one minute after the current time.
5. Press Enter and verify that the screen displays the message:

   `Command successfully completed`

NOTE:
For earlier releases of system software, disable Cleared Alarm Notification and Restart Notification before submitting the form.

NOTE:
When finished working on the switch be sure to return all fields to their original settings.

Action/Object	Qualifier	Qualifier Description	Logins	Defaults	Feature Interactions
change system-parameters maintenance		Examples: **change system-parameters maintenance**	init inads craft cust rcust	none	none

Output

The following output example shows a display of the **change system-parameters maintenance** command.

```
change system-parameters maintenance                              Page   1 of 3
                  MAINTENANCE-RELATED SYSTEM PARAMETERS

OPERATIONS SUPPORT PARAMETERS
            Product Identification: 1000000000
                First OSS Endpoint: 5551212           Abbrev Alarm Report? y
               Second OSS Endpoint: 5551213           Abbrev Alarm Report? n
  Alarm Origination to OSS Numbers: both
        Cleared Alarm Notification? y                Suspension Threshold: 5_
              Restart Notification? y
           Test Remote Access Port? n
        CPE Alarm Activation Level: none
              Packet Bus Activated? n
     Customer Access to INADS Port? n
       Repeat Dial Interval (mins): 7

SCHEDULED MAINTENANCE
                  Start Time: 22: 00                    Stop Time: 04: 00
           Daily Maintenance: daily              Save Translation: daily
 Control Channel Interchange: no        System Clocks Interchange: no
             SPE Interchange: no             EXP-LINK Interchange: no
```

Field descriptions (page 1)

Operations Support Parameters

Product Identification	Identifies switch to an Operations Support System (OSS): 10-digit number starting with 1.
First OSS Telephone Number	Switch reports alarms first to the First OSS telephone number (for example, INADS or Trouble Tracker). The number must be obtained from the National Customer Support Center (NCSC) or the TSC. (# and ***** are not allowed in the telephone number.)
Abbrev Alarm Report	Enables the Abbreviated Alarm Report feature for the first OSS. (y)
Second OSS Telephone Number	The switch reports alarms secondly to the second OSS telephone number. For example, INADS or DEFINITY SNMP. The number must be obtained from the National Customer Support Center (NCSC) or the TSC. (# and ***** are not allowed in the telephone number.)
Abbrev Alarm Report	Enables the Abbreviated Alarm Report feature for the second OSS. (n)

`Alarm Origination to OSS Numbers`

Indicates one of four options for alarm origination (neither):

`both` = Major and Minor alarms result in an automatic call to both administered OSS telephone numbers.

`first-only` = Major and Minor alarms result in an automatic call to the first administered OSS number.

`neither` = alarm origination does not occur; reports are not sent to either number.

`second no-backup` = Major and Minor alarms result in an automatic call to the first administered OSS telephone number. If calling the first OSS telephone number fails four times, the switch calls the second administered OSS telephone number until calling the first OSS telephone number is successful.

NOTE:
Before Release 5, the name of this field is `Alarm Origination Activated`.

If Alarm Origination is deactivated, Cleared Alarm Notification and Restart Notification deactivate, even though they may still be activate in the administration.

`Cleared Alarm Notification`

The switch originates calls to the OSS and sends an alarm resolution message once all previously-reported Major and Minor alarms are resolved. Activate Alarm Origination to enable Cleared Alarm Notification. (n)

`Restart Notification`

Enables the switch to originate calls to the OSS and report any system restarts caused by switch problems. Activate Alarm Origination to enable Restart Notification.

`Suspension Threshold`

Some problems cause alarms to be generated and resolved repeatedly. To detect these problems, the switch suspends Cleared Alarm Notification when it has reported the specified number of Cleared Alarm notifications in a 24 hour period. A suspended Cleared Alarm Notification reactivates with a successfully-completed “logoff” command, a system reset, or when the threshold is changed. This field is irrelevant if `Cleared Alarm Notification` or `Alarm Origination` are disabled. (1–15)

`Test Remote Access Port`

Indicates if remote access testing on the SYSAM circuit pack is active. This field should be set to **yes** when an INADS line is connected to the switch and a maintenance contract is in effect to maintain alarm origination capability.

If no equipment is connected to the remote access port, or if a trunk for remote access and alarm origination is not provided, running tests on the remote access port on the SYSAM results in test failures. This causes unnecessary maintenance alarms and allows potentially destructive tests to be run. To prevent this, set this field to **no**.

`CPE Alarm Activation Level`

Indicates the minimum level (Major, Minor or Warning) to activate Customer-Provided Equipment (CPE) alarm. If the level is **none**, the CPE does not activate for any alarm. (none)

NOTE:
When the switch goes into Emergency Transfer, the CPE alarm activates regardless of the CPE Alarm Activation Level setting.

`Packet Bus Activated`

If this field is set to **yes**, maintenance software assumes that a Packet Control circuit pack is installed. If packet endpoints (for example, ASAI, and/or BRI) are administered, and maintenance testing runs on both the Packet Control circuit pack and Packet Bus (set this field to **yes** after a packet control circuit pack is installed.). If a Packet Control circuit pack is not installed in the system, a major alarm is raised against the PKT-CTRL MO.

Change this field to **no** if no packet endpoints are administered, to ensure that no packet endpoints can be administered if the packet bus deactivated.

Set this field to **yes** after a Packet Control circuit pack is installed.

If a Packet Control circuit pack is not installed, then this field should be set to **no** (the only exception is system translations that do not have all required hardware). (n)

`Customer Access to INADS Port`

To prevent customer login ID access to system administration and maintenance interface control, set this field to **no**. Avaya services has sole access to this field. (n)

`Repeat Dial Interval (MMS)`

Number of minutes that the system must wait before attempting another call origination to an OSS. Lack of a far-end acknowledgment triggers the timer.

Scheduled Maintenance

An automated series of maintenance tests and operations runs daily according to the schedule and settings specified in the following fields.

Table 8-1. Scheduled Maintenance Settings

`Start Time`	Hour and minute (24-hour notation) when daily scheduled maintenance starts
`Stop Time`	The hour and minute when scheduled daily maintenance ceases. If any daily maintenance operations are not completed by this time, the system notes its stopped sequence location and includes those operations during the next scheduled daily maintenance.
`Daily Maintenance`	This display-only field lists the standard test series run by maintenance software during daily maintenance.
`Save Translation`	Indicates days that translation data in memory automatically saves to the Mass Storage System disk and/or tape devices during scheduled maintenance. The operation saves to disk, then completes a backup to tape. Translation data saves to both SPEs, if systems have duplicated SPEs. (daily, days of the week, or no - prevents automatic saves)
`Control Channel Interchange`	Each port network has a pair of TDM busses (A and B). Each has a set of time slots dedicated to the control channel. One bus (at a time) carries the control channel in each PN. (daily, days of the week, or no - prevents interchanges). (n)
`System Clocks Interchange`	For High and Critical Reliability systems, this option initiates a Tone-Clock interchange in each port network possessing duplicated Tone-Clock circuit packs. Each port network interchanges into the standby Tone-Clock for 20 seconds and then back to the originally-active Tone-Clock. This field indicates the days that interchanges occur. (daily, days of the week, or no). “No” prevents interchanges. (n)
	The system performs a Tone-Clock interchange, activating the stand by Tone-Clock. After the newly-active Tone-Clock circuit pack is tested, it provides system clocks for its native port network. Then the system interchanges to the originally active Tone-Clock circuit pack.
`SPE Interchange`	This field indicates the days SPE interchanges execute during scheduled maintenance, for duplicated SPE systems. (daily, days of the week, or no). “No” prevents scheduled interchanges. (n)

Continued on next page

Table 8-1. Scheduled Maintenance Settings — *Continued*

EXP-LINK Interchange	This field indicates if expansion links between port-networks interchange as part of scheduled maintenance. The value, “daily”, means that EXP-LINK interchanges automatically occur everyday. The value “no" means that EXP-LINK interchanges do not automatically occur as part of scheduled maintenance. Values represented by the days of the week mean that EXP-LINK interchanges automatically occur automatically on specified days. Since EXP-LINK interchanges apply to duplicated systems, simplex systems do not display this field. (n)
Minimum Threshold for TTRs	When the number of touch tone receivers (TTRs) in service falls below this number (4 to 200), a WARNING alarm is raised against TTR-LEV. These are also known as dual-tone multifrequency receivers (DTMRs). There are 4 TTRs on each TN748, TN718, TN420, or TN756; TN2182 and TN744 (suffix C or later) each have 8 TTRs. To alarm the first occurrence of a TTR being taken out of service, set this field to the total number of TTRs in the switch.
Minimum Threshold for CPTRs	When the number of call progress tone receivers in service falls below this number (2 to 100), a WARNING alarm is raised against TTR-LEV. These are also known as general purpose tone detectors (GPTDs). There are 2 CPTRs on each TN748, TN718, TN420, or TN756; TN2182 and TN744 (suffix C or later) each have 8 CPTRs. To alarm the first occurrence of a CPTR being taken out of service, set this field to the total number of CPTRs in the switch.
Minimum Threshold for Call Classifier Ports	When the number of call classifier ports (CLSFY-PTs) in service falls below this number, a WARNING alarm is raised against TTR-LEV. Valid entries are 1 to 200. There are 8 ports on each TN744 or TN2182 circuit pack. To alarm the first occurrence of a CLSFY-PT being taken out of service, set this field to the total number of CLSFY-PTs. If there are no TN744 or TN2182 circuit packs in the system, leave this field blank.

Continued on next page

Table 8-1. Scheduled Maintenance Settings — *Continued*

`Test Type 100, Test Type 102, Test Type 105`	This field specifies extensions assigned to receive tie-trunk calls from other switches that have test line origination capability. The system responds by sending a sequence of test tones. Test Type 100 tests far end to near end loss and C-message by sending: ■ 5.5 seconds of 1004 Hz tone at 0dB ■ Quiet until disconnect; disconnect is forced after one minute Test Type 102 tests far end to near end loss by sending: ■ 9 seconds of 1004 Hz tone at 0dB ■ 1 second of quiet ■ This cycle is repeated until disconnect; disconnect is forced after 24 hours. Test Type 105 tests 2-way loss, gain slope, and C-message and C-notch noise by sending: ■ nine seconds of 1004 Hz at -16dB ■ one second of quiet ■ nine seconds of 404 Hz at -16dB ■ one second of quiet ■ nine seconds of 2804 Hz at -16dB ■ 30 seconds of quiet ■ one-half second of Test Progress Tone (2225 Hz) ■ approximately five seconds of quiet ■ forced disconnect
`ISDN-PRI Test Call Extension`	This field indicates the extension used by far-end ISDN nodes to place calls to the system, for testing ISDN-PRI trunks between the far-end and the system.
`ISDN-BRI Service SPID`	This field shows if the link associates with the Service SPID. If the link is associated with the Service SPID. This number is the test SPID (0 – 99999) (under BRI-SET MO). Otherwise, this field is blank. Service SPID is a feature used by the system technician to check building wiring between the switch and the BRI endpoint.

Continued on next page

Table 8-1. Scheduled Maintenance Settings — *Continued*

`DSO Loop-Around Test Call Extension`	The extension used to set up a DSO loop around connection for testing non-ISDN DS1 trunks. The DSO Loop-Around Test Call feature is used primarily for testing DSO channels associated with non ISDN-PRI trunks. The loop-around is activated by dialing the test extension number; multiple DSO Loop-Around connections can be established by placing multiple calls to the loop-around extension. For more information see ''Facility test calls'' in Chapter 5, ''Routine Maintenance Procedures''.
`SPE Optional Boards`	These fields indicate if a Disk circuit pack is present, and identifies administered Packet Interface slots. If a Packet Interface circuit pack is present, the corresponding Packet Interface field is set to **y** when the system boots. No change to that field is allowed. If the system is equipped with duplicated SPEs, the `Packet Interface` field is set to **y** if either SPE carrier contains a Packet Interface circuit pack in the corresponding position. If a Packet Interface circuit pack is not present, the value for the `Packet Interface` field is read from translation data, and stored on disk or tape. If the field is set to **n**, a Packet Interface circuit pack may be administered by changing the corresponding `Packet Interface` field to **y**.

Output (page 2)

The following example shows the output from *page 2* of the **change system-parameters maintenance** command.

```
                                                                Page 2 of 3

                    MAINTENANCE-RELATED SYSTEM PARAMETERS

 MINIMUM MAINTENANCE THRESHOLDS ( Before Notification )
         TTRs: 4        CPTRs: 1        Call Classifier Ports: 0
         MMIs: 0          VCs: 0

 TERMINATING TRUNK TRANSMISSION TEST (Extension)
   Test Type 100:        Test Type 102:         Test Type 105:

 ISDN MAINTENANCE
    ISDN-PRI TEST CALL Extension: _____   ISDN BRI Service SPID: _____

 DS1 MAINTENANCE
    DSO Loop-Around Test Call Extension: _____

SPE OPTIONAL BOARDS
               Packet Intf1? y   Packet Intf2? _
   Bus Bridge: ____     Inter-Board Link Timeslots Pt0: _   Pt1: _   Pt2: _
```

Field descriptions

SPE OPTIONAL BOARDS section

`Packet Intfl1` Identifies the presence of Packet Interface 1 (**y** for si).

`Packet Intfl2` Identifies the presence of Packet Interface 2 (**y** for si). Default is **n**.

`Bus Bridge` The location of the C-LAN circuit pack performing the bus bridge functionality when the packet bus is activated. Enter 5-character circuit pack number (CCcss, where CC = cabinet number 1-3, c = carrier A-E, ss = slot number 0-20). Default is blank.

`Inter-Board Link Timeslot Pt0` The number of timeslots to be used for port 0 on the Inter-Board Link. Displays only if the switch type is csi and the `Packet Intf2` field is **y**. Enter the number of timeslots (**1**-**9**) to be used by this Inter-Board Link port. Default is **6**.

`Inter-Board Link Timeslot Pt1` The number of timeslots to be used for port 10 on the Inter-Board Link. Displays only if switch model type is csi and the `Packet Intf2` field is **y**. Enter the number of timeslots (**1**-**3**) to be used by this Inter-Board Link port. Default is **1**.

`Inter-Board Link Timeslot Pt2` The number of timeslots to be used for port 2 on the Inter-Board Link. Displays only if switch model type is csi and the `Packet Intf2` field is **y**. Enter the number of timeslots (**1**-**3**) to be used by this Inter-Board Link port. Default is **1**.

Output (page 3)

```
 change system-parameters maintenance           Page 3 of 3

           MAINTENANCE-RELATED SYSTEM PARAMETERS

        Modem Connection: external
               Data Bits: 8
                  Parity: none

              Modem Name: _______

         RTS/CTS Enabled: \Q3      Auto Answer Ring Count (rings):
S0=10
  Asynchronous Data Mode: &M0&Q0                        Dial
Type: T
     DTE Auto-Data Speed: ______      Adjustable Make/Break
Ratio:
Disable Data Compression: ______                     Dial
Command: D
    Enable Error Control: ______               No Answer
Time-out: S7=255
       Misc. Init. Param: ______________
```

Field descriptions (page 3)

Modem Connection

On page 3 of the example forms, 11 fields disappear when the `Modem Connection?` field is set to **internal**. In this example the `Modem Connection` field is set to **external**, revealing the 11 fields.

The first 2 fields on page 3 help setup the data format for the serial data from the switch to the modem.These fields are display-only, and they must contain the following values:

- Data Bits = 8, Parity = None

The remaining fields are listed below.

`Modem Connection`	Valid entries are `internal` or `external`.
`Modem Name`	This field is 20 characters long and will permit alpha-numeric characters to provide a unique qualifier for a given modem. ()
`RTS/CTS Enabled`	This field will inform the modem that communication with the data source UART will be driven with RTS/CTS flow control. This field is 6 characters long and is case in-sensitive. (\Q3)

`Asynchronous Data Mode`	This field will configure the modem as an asynchronous communications device. This field is 8 characters long and is case in-sensitive. (&M0&Q0)
`DTE Auto-Data Speed`	This option will adjust the speed of the data source (DTE) UART to the outgoing (modem-to-modem) data rate. So, at maximum this speed would be 9600 baud. This field is 6 characters long and is case in-sensitive. Note that this field sets the link speed between the switch and the modem. It does not set the speed of the modem. It is not desirable to have the serial data fill the modem buffer faster than the outgoing data rate especially because data compression is disabled. ()
`Disable Data Compression`	This field will turn off the default data compression algorithms that are in use by most consumer modems. This field is 6 characters long and is case in-sensitive. ()
`Enable Error Control`	This field will turn on the V.42 LAPM and MNP error control protocols, if available on the modem. This field is 6 characters long and is case in-sensitive. This V.42/MNP/Buffer mode first attempts to negotiate V.42 error control with the remote modem. If this fails, then the modem transitions to MNP, and if this fails then no error control is used. ()
`Misc. Init. Param`	This field supports any initialization parameters that are not already specified. The AT commands specified in this free-form field will be always the last initialization parameters to be sent to the external modem. This field is 20 characters long and is case in-sensitive. ()
`Auto-Answer Ring Count`	This field controls the number of rings required before the modem automatically answers an incoming call, if and only if the switch doesn't answer first. (If the switch is healthy, it answers an incoming within the first few rings.) This field is 6 characters long and is case insensitive. Typically, the maximum permissible value for this register is 255. The values 1-255 denote the number of incoming ring cycles. (S0=10) **NOTE:** The number of rings is optimally set above 5, and if at all possible, keep the default of S0=10.
`Dial Type`	This field controls the type of inter-register signaling to be used between the modem and the Central Office. Use "T" for tone dialing and "P" for pulse dialing. The field length is be 3 characters long and is case in-sensitive. This field will be concatenated with the dial string. (T)

`Adjustable Make/Break Ratio`	This field can be of particular importance when using a modem that may be transferable from country to country. The intent of this field is to control the make/break ratios of pulses and DTMF dialing. The Intel product information has support for the different make/break options for pulse dialing only. Intel uses the option “&P0” to select a ratio of 39% make and 61% break for communication within the U.S. and Canada. The option “&P1” sets a ration of 33% make and 67% break for the U.K. and Hong Kong. This field is 5 characters long and is case in-sensitive. ()
`Dial Command`	This field simply denotes the dialing command of the modem. This is a fairly standard command. (D)
`No Answer Time-Out`	Most off-the-shelf external modems provide a timer that abandons any outbound data call after a predetermined interval. Some modems provide for this timer to be disabled, thus allowing an outbound call to ring indefinitely. AT&T Paradyne does not provide this capability with their modem line, because it is generally undesirable to have an outbound call attempt ring indefinitely. The internal modem must have this parameter disabled or set to at least 255 seconds. This is a non-administrable parameter. For the external modem connection, this parameter will be the first initialization string to be transmitted to the external modem. This field will be visible on the administration form in display mode only. This hardcoded constant can be overridden for type approval applications, specifically in the U.K and other Western European nations, by the use of the “Misc. Init. Param:” field. (S7=255)

clear audits

This command clears cumulative and/or peak hour's data collected for each data relation audit since the last **clear audits** command. Using this command before the **status audits** command ensures that the **status audits** report reflects current conditions.

Action/ Object	Qualifier	Qualifier Description	Logins	Defaults	Feature Interactions
clear audits	***cumulative***	Clears peak hour data collected since the last reboot or **clear audits cumulative** command	init inads	none	See below
	peak-hour	Clears peak hour data			
		Examples: **clear audits cumulative** **clear audits peak-hour**			

Feature Interactions

Status audits displays data cleared by the **clear audits** command. After **clear audits** executes successfully, the **display audits cumulative** and/or **display audits peak-hour** commands display information collected since the last **clear audits** command. The start date displays on the status audits screen reflects the time that **clear audits** executed.

clear errors

This command moves errors and resolved alarms to the cleared-error list, making room for new incoming error messages, but it does not clear active alarms from the alarm log. This command must be used with care to prevent overwriting cleared entries. When additional entries are needed to log new errors, the system overwrites cleared errors first. Use the **display errors** command to list the cleared errors.

Action/ Object	Qualifier	Qualifier Description	Logins	Defaults	Feature Interactions
clear errors		Examples: **clear errors**	init inads craft	none	none

clear interface

This command reintializes counter values maintained by the Processor Interface (PI) circuit pack. The **status interface** command displays the counters. The PI circuit pack is a front end processor that implements the packet and link layers of the BX.25 protocol and the ISDN procedure-D protocol.

Action/ Object	Qualifier	Qualifier Description	Logins	Defaults	Feature Interactions
clear interface	***location***	Processor interface address (cabinet-carrier-position): 1 = first processor 2 = second processor Examples: **clear interface 01a1** **clear interface 01a2** **clear interface a2**	init inads craft	none	none

clear isdn-testcall

This command cancels any ISDN-PRI test calls in progress. Once a running test call is cleared, another can begin.

Action/ Object	Qualifier	Qualifier Description	Logins	Defaults	Feature Interactions
clear isdn-test call	group number member number	Trunk group number Member within a trunk group Examples: **clear isdn-testcall 80/1** **clear isdn-testcall 78/2**	init inads craft	none	none

clear link

This command clears the counters associated with a numbered PPP C-LAN link. The clear clan-port command accomplishes the same thing. The statistical counters cannot be cleared for an Ethernet C-LAN link.

Action/ Object	Qualifier	Qualifier Description	Logins	Defaults	Feature Interactions
clear link	***link-id***	Link number (1-8) assigned through **communication-interface links** form. Examples: **clear link 1** **clear link 8**	init inads craft	none	none

clear mst

This command clears the trace buffer and is generally used before enabling a trace. If this command is executed while a trace is enabled, it clears unwanted data.

Action/ Object	Qualifier	Qualifier Description	Logins	Defaults	Feature Interactions
clear mst		Examples: **clear mst**	init inads	none	none

clear pkt

This command helps resolve packet bus problems by sending a ‘clear stimuli’ message over the packet bus.

Action/ Object	Qualifier	Qualifier Description	Logins	Defaults	Feature Interactions
clear pkt	port network location	Physical location of the packet bus (1 - 3) Examples: **clear pkt port-network 1**	init inads craft	none	none

clear port

This command removes maintenance marks from a port, freeing it for use.

Action/ Object	Qualifier	Qualifier Description	Logins	Defaults	Feature Interactions
clear port	location	Port location (**PCsspp**) Examples: **clear port 01c1102**	init inads cust nms	none	none

copy update-file

In Duplex systems only, this command copies update files from the active SPE to the standby SPE. This command recovers field update (“patch”) files that are downloaded to the switch when the Standby SPE is unavailable. The switch makes validation checks on the standby as it receives the file. If a newer, valid update file exists on the standby, use the override option to force the copy.

Action/ Object	Qualifier	Qualifier Description	Logins	Defaults	Feature Interactions
copy update-file	***override***	Copies update files from active to standby SPE, regardless of the dates. Examples: **copy update-file** **copy update-file override**	init inads	none	See below

Feature Interactions

- The form display for the **list configuration software-vintage** command allows INADS to determine the hardware configuration, software vintage, and patch identifier.
- Because patches are applied on restarts before the system is in normal operation, no interaction with routine periodic or scheduled maintenance exists.
- The flash checksum test acts as a backup check to ensure entire field update files are applied correctly. When the flash Checksum Test fails, a MAJOR on-board alarm is raised on the processor/memory circuit pack. Maintenance runs a data consistency test on a daily basis to check that copies of translations, announcements, and software files are consistent across both processors in a High or Critical Reliability System. If the test detects a difference, a minor, off-board alarm is generated.

- When checking software, the test compares the memory resident software version and the patch identifier. It also searches for the presence of field update files. If found, it compares the old and new patch identifiers to ensure that the same patch file id is loaded on each processor. If the software or update files are inconsistent, the **list configuration software** command displays the patch file status.

disable administered-connection

This command stops both scheduled and periodic testing and stops processing of in-line errors for all or selected administered connections.

Action/ Object	Qualifier	Qualifier Description	Logins	Defaults	Feature Interactions
disable administered-connection	ac number all	Number of the administered connection Selects all administered connections Examples: **disable administered-connection all** **disable administered-connection 1** **disable administered-connection 128**	init inads craft cust rcust mis	none	none

disable filesystem board ppcss

disable filesystem board ppcss

This command requests the board ppcss to remove the memory filesystem.

This command will fail if there are any files present on the filesystem and an error message, filesystem still has files, will be displayed on the SAT. To disable the filesystem, remove all the files on the filesystem via the remove file path board ppcss SAT command.

This command fails if the filesystem is already disabled.

disable firmware download

disable firmware download

This command stops the current firmware download. If a target board is currently downloading the download is first completed for the current board but the remaining boards are not downloaded.

disable mst

This command stops the message trace facility. If the trace was not already disabled, the command inserts a GAP marker into the trace. The user should execute the **disable mst** command when the trace is complete. If left enabled, the trace continues to use CPU time until the time limit expires. Entering **disable mst** command has no effect on the system if the trace is already disabled. To view the results of the trace, enter the **list mst** command.

Action/ Object	Qualifier	Qualifier Description	Logins	Defaults	Feature Interactions
disable mst		Example: **disable mat**	init inads	none	none

disable suspend-alm-orig

This command stops entries from the active Suspend Alarm Origination table and disables all board entries that match a specific physical board location.

NOTE:
This command does *not* disable port entries.

Action/ Object	Qualifier	Qualifier Description	Logins	Defaults	Feature Interactions
disable suspend-alm-orig	board location	Physical location of the replaced or corrected board (does not support port location): **PCss** Examples: **disable suspend-alm-orig 1C03** **disable suspend-alm-orig 1E07**	init inads craft cust rcust	none	none

disable synchronization-switch

This command stops the automatic clock switching capability of the maintenance subsystem. The clock refers to the oscillator on a tone/ clock or DS1 interface. The synchronization subsystem (TDM bus clock, DS1 trunk board, and maintenance and administration software) provides error-free digital communication between the switch and other PBXs, COs, or customer equipment.

Action/Object	Qualifier	Qualifier Description	Logins	Defaults	Feature Interactions
disable synchronization-switch			init inads craft	none	none

disable test-number

This command prohibits selected maintenance tests from running. To run a disabled test number, enter the **enable test-number** command.

Action/ Object	Qualifier	Qualifier Description	Logins	Defaults	Feature Interactions
disable test-number	number print schedule	Maintenance test number Report sent to printer Command is validated and then a scheduling form displays to schedule execution of the command. The command is then placed in the command queue and is executed at the specified time. The information displayed by the command is sent to the system printer instead of the screen.[1] Examples: **disable test-number 710** **disable test-number 710 print** **disable test-number 510 schedule**	init inads	none	none

1 Refer to the Report Scheduler and System Printer feature specification for more details.

display alarms

This command creates an Alarm Report. The user completes an option screen to select the parameters for the report.

The system creates the reports from the logs of the maintenance subsystem. The subsystem monitors the system hardware and logs problems as errors or alarms. The type of alarm indicates the impact of the problem, as defined below:

Warning alarm—A minor interference which does not noticeably impair service.

Minor alarm—A problem which could disable a local area of the system and noticeably impair service.

Major alarm—A problem which widely degrades the system and seriously impairs service. The system automatically calls INADS to report major alarms.

Resolved alarm—A problem which has been corrected, and the system is correctly functioning. The system stamps resolved alarms with the date and time the problem was corrected. The system handles any errors associated with the alarms as “resolved.”

System Reboots and the Alarm Logs

The system saves the alarm and error logs to the *active* SPE memory card if any of the following events occur:

— The **save translation** command is executed

— Translations are saved as part of scheduled maintenance

— A reboot

— The PPN is about to lose all power after having been on battery backup

The attempt to save the alarm and error logs may be unsuccessful if the MSS is not available.

Whenever the system reboots, the logs are restored from the SPE disk that becomes active with the reboot. Since the logs are saved to the disk on the SPE that was active *before* the reboot, the versions restored at reboot time may not be current. This condition occurs if:

— The attempt to save at reboot did not succeed.

— The SPE disk that is rebooted is not the same disk to which the logs were last saved.

In such a case, the logs do not contain the most recent errors and alarms. To determine if the restored logs are complete, look for indications that would have preceded the reboot.

System resets, that are less severe than a reboot, rarely affect the error and alarm logs.

NOTE:
If the error and alarm logs contain SYSTEM errors, then use **display initcauses** to search for information that the system could *not* log during reset operation.

Action/ Object	Qualifier	Qualifier Description	Logins	Defaults	Feature Interactions
display alarms	print schedule	Report sent to printer Command is validated and then a scheduling form displays to schedule execution of the command. The command is then placed in the command queue and is executed at the specified time. The information displayed by the command is sent to the system printer instead of the screen.[1] Examples: **display alarms** **display alarms print** **display alarms schedule**	init inads craft cust rcust bcms browse	all alarms displayed	see below

1 Refer to the Report Scheduler and System Printer feature specification for more details.

Feature Interactions

- If the user disables the alarm origination with the **change system parameters-maintenance** command, then the `Ack?` (Acknowledged) field on the Alarm Report is blank regardless of the true acknowledged state of the alarm.

Options screen

Use **display alarms** to show the options screen, and select the options you want to view on the report. The figure below is an example of the options screen for Alarm Reports.

```
display alarms                                                Page 1 of 1
                                ALARM REPORTS

        The following options control which alarms will be displayed.
        ALARM TYPES
                   Active? y_      Resolved? n_
                    Major? y_         Minor? y_      Warning? y_
        REPORT PERIOD
                 Interval: m_    From: __/__/__:__  To: __/__/__:__
        EQUIPMENT TYPE ( Choose only one, if any, of the following )
                              Cabinet: ____
                         Port Network: __
                         Board Number: _______
                                 Port: ________
                             Category: ________
                            Extension: _____
                 Trunk ( group/member ): ___/___
```

The fields on the options screen are described below:

`ALARM TYPES`	Enter **y** (yes) or **n** (no) in any of the 5 alarm type fields
`Interval`	Enter **one** of the codes below: **m** = last month **h** = last hour **d** = last day ***w*** = last week **a** = all
`From`	Month/day/year (example: 01/01/97); if the `From` date is blank, the report contains all the active alarms for the month *prior* to the current date.
`To`	Month/day/year (example: 01/15/97); if the `To` date is not entered, the report contains all the active alarms starting with the `From` date to the current date.
`Cabinet`	Administered cabinet number (1-3)
`Port Network`	1-3
`Board Number`	Board address (**PCSS**); example: 01A20
`Port`	Port address (**PCSSpp**); example: 01A2031
`Category`	Object code for the equipment category. Press HELP in this field to view a list of the object codes.
`Extension`	Extension number (per dial-plan)
`Trunk`	Enter a group number or a group and member number: ■ Enter *only* the **group** number (01-99) to display *all* members in the group. Example: 01/__ ■ Enter *both* the **group** number (01-99) and **member** number (01-99) to display a *specific* member in a group. Example: 01/99

Output

After you complete the options screen, the system displays a 1- or 2-page Alarm Report. To toggle between the pages and to exit the report, use the keys described below:

- For 513 and 715 terminals, use **F8** for NEXT PAGE and PREV PAGE commands
- For all other terminals, use **F7** for NEXT PAGE and PREV PAGE commands
- Use **Esc** for the `CANCEL` command

The figure below is an example of an Alarm Report.

```
display alarms

                                ALARM REPORT

Port    Maintenance  On      Alt    Alarm   Svc   Ack?  Date        Date
        Name         Brd?    Name   Type    State 1 2   Alarmed     Resolved

02A     TONE-BD      y              MAJOR         y n  05/22/20:34 00/00/00:00
01C07   ANL-BD       y              MINOR         n n  05/22/20:26 00/00/00:00
01C0702 ANL-LINE     n       311    WARNING  IN        05/22/20:26 00/00/00:00
01C0701 ANL-LINE     n       1051   WARNING  IN        05/22/20:26 00/00/00:00
01C0703 ANL-LINE     n       1053   WARNING  IN        05/22/20:26 00/00/00:00
01C1505 CO-TRK       n       78/01  WARNING  OUT       05/22/20:26 00/00/00:00
01C1505 CO-TRK       n       78/01  WARNING  OUT       05/22/20:26 00/00/00:00
02A0201 TONE-PT      n              WARNING            05/22/20:34 00/00/00:00
02A     TDM-CLK      n              WARNING            05/23/13:43 00/00/00:00
PN 02B  TDM-BUS      n              WARNING            05/23/14:53 00/00/00:00

Command successfully completed
```

Field descriptions

`Port`

Lists the location codes for the alarmed object, as follows:

- Circuit packs locations display as: cabinet-carrier-[slot]-[circuit]. Example: **01C0702**.
- Port network locations display as: port network number-bus. Example: **PN 02B**. PN 02 = Port Network (PN) number and A or B = bus.
- Fiber link locations display as: fiber link number-PNC side. Example: **x A-PNC**. “X” = fiber link number and “A” = PNC side [A or B].

`Maintenance Name`

Lists the logical name of the maintenance object with the alarm.

`On Brd`

A **y** (yes) indicates the fault was found on the associated circuit pack. An **n** (no) indicates the fault is **not** connected to the circuit pack.

`Alt Name`

Identifies the location of maintenance object, as follows:

- Station = extension number
- Trunk = Group number (78/__) or group and member numbers (78/01)
- Private CO Line = private CO line (P) and group number. (P/xxx)

`Alarm Type`

Alarm level: MAJOR, MINOR, or WARNING

`Service State`

Identifies the service state of the station and trunk ports, as follows:

- RDY = ready for service
- OUT = out of service
- IN = in service
- [Blank] = No associated service state

`Ack?`

Headings 1 and 2 identify the first and second OSS telephone numbers, respectively. The entries below indicate the acknowledged alarm state:

- **Y** (yes) = alarm has been acknowledged
- **N** (no) = alarm has **not** been acknowledged
- **C** (cleared) = alarm was first acknowledged, then resolved and cleared

[Blank] = no attempt was made to report the alarm

NOTE:
If the user disables the alarm origination with the **change system-parameters maintenance** command, then the **Ack?** field is blank regardless of the true acknowledged state of the alarm.

`Date Alarmed`

Indicates the month, day, hour, and minute of the alarm.

`Date Resolved`

Indicates the month, day, hour, and minute of the resolution. For active alarms, this field contains zeros (0).

display cabinet

This command displays the cabinet description and location and the carrier description for a selected cabinet number.

Action/ Object	Qualifier	Qualifier Description	Logins	Defaults	Feature Interactions
display cabinet	***print***	Report sent to printer	init inads craft cust rcust	none	none
	schedule	Command is validated and then a scheduling form displays to schedule execution of the command. The command is then placed in the command queue and is executed at the specified time. The information displayed by the command is sent to the system printer instead of the screen.[1] Examples: **display cabinet 1**			

1 Refer to the Report Scheduler and System Printer feature specification for more details.

Output

The example below shows the output for the **display cabinet 1**.

```
display cabinet 1
                                CABINET

 CABINET Description
                  Cabinet: 1
            Cabinet Layout: five-carrier
              Cabinet Type: processor
   Number of Portnetworks: 1
                    Room: 30n46
                   Floor: first
                Building: main

 CARRIER Description
   Carrier       Carrier Type        Number

      C        port                  PN  01
      B        not-used              PN  01
      A        processor             PN  01
      X        Fan
      D        not-used              PN  01
      E        switch-node           SN  01


Command Successfully Completed
```

Field descriptions

Cabinet	Administered cabinet number
Cabinet Layout	Type of cabinet (five-carrier or single-carrier-stack)
Cabinet Type	Type of port network (processor or expansion)
Number of Port networks	Number of port networks (1 or 2)
Room	Room where cabinet is located, administered on the cabinet form.
Floor	Floor where cabinet is located, administered on the cabinet form.
Building	Building where cabinet is located, administered on the cabinet form.
Carrier	Letter identifying the carrier (A-E or X not applicable)
Carrier Type	Port, processor, switch-node, fan, or not-used
Number	Administered port network number *or* switch node number

When you enter the command: **display cabinet 3** and the cabinet is a stack of single-carrier-cabinets, the system displays a screen similar to the figure below. The fields on the screen are the same as described above.

```
display cabinet 3
                              CABINET

 CABINET Description
                  Cabinet: 3
           Cabinet Layout: single-carrier-stack
             Cabinet Type: expansion-portnetwork
   Number of Portnetworks: 1
                     Room: 30n46
                    Floor: first
                 Building: main

 CARRIER Description
   Carrier       Carrier Type        Number

      D        not-used              PN  03
      D        not-used              PN  03
      B        port                  PN  03
      A        expansion-control     PN  03
```

display capacity

Use **display capacity** to show how you administered your system and provide a snapshot of the switch resource status.

Action/ Object	Qualifier	Qualifier Description	Logins	Defaults	Feature Interactions
display capacity	print	Report sent to printer	init inads craft cust rcust	none	none
	schedule	Command validated first, then a scheduling form displays to schedule execution of the command. The command is then placed in the command queue and is executed at the specified time. The information displayed is sent to the system printer instead of the screen.[1]			

1 Refer to the Report Scheduler and System Printer feature specification for more details.

The screens below show an example output from **display capacity**. The capacities listed are only examples, and may not coincide with your system. The screens help explain the command and the field values.

```
display capacity                                                        (Page 1)

                                SYSTEM CAPACITY

                  Current System Memory Configuration: G3rV11

                                                                        System
                                                          Used  Available  Limit
                                                        - - - - - - - - - - - - -
                      AAR/ARS
                                AAR/ARS Patterns:          17      623      640
                          Inserted Digit Strings:           6     2994     3000

            ABBREVIATED DIALING (AD)

                           AD Entries Per System:          10    99990   100000
                    AD Personal Lists Per System:           1     4999     5000

  ADJUNCT SWITCH APPLICATION INTERFACE (ASAI)
                 Active Controlling Associations:           0     6000     6000
                           Notification Requests:           0    10000    10000
    Simultaneous Active Adjunct Controlled Calls:           0     3000     3000
```

Screen 8-1. System Capacity (page 1)

Field descriptions (page 1)

AAR/ARS

`AAR/ARS Patterns`	The number of route patterns. For more information, see *Administrator's Guide for Avaya MultiVantage Software*.
`Inserted Digit Strings`	Number of 12-character inserted-digit strings available for AAR/ARS preferences. For more information, see *Administrator's Guide for Avaya MultiVantage Software.*

Abbreviated Dialing (AD)

`AD Entries Per System`	The number of abbreviated dialing entries (for both group and personal lists).
`AD Personal Lists Per System`	The number of abbreviated dialing personal lists. For more information, see *Administrator's Guide for Avaya MultiVantage Software*.

Adjunct Switch Application Interface (ASAI)

`Active Controlling Associations`	The number of station domain controls that ASAI adjuncts can request.
`Notification Requests`	The number of requests ASAI can make to monitor call activity at a split or VDN.
`Simultaneous Active Adjunct Controlled Calls`	The number of calls that can be controlled by ASAI adjuncts.

```
                                                                (page 2)
                              SYSTEM CAPACITY
                                                                         System
                                                        Used  Available  Limit
                                                      - - - - - - - - - - - - -
ATTENDANT SERVICE

                         Attendant Positions:           2       26       28
                               Queue Length:            0      300      300
                   Queue/Call Status Buttons:

                         Authorization Codes:           0    90000    90000

  BASIC CALL MANAGEMENT SYSTEM (BCMS)
                             Measured Agents:           0     2000     2000
                   BCMS Measured ACD Members:           0
                 BCMS Measured Splits/Skills:           0      600      600
                          BCMS Measured VDNs:           0      512      512

                  '+'  Limit combined with Facility Busy Indicators
```

Screen 8-2. System Capacity (page 2)

Field descriptions (page 2)

Attendant Service

Attendant Positions	The number of administered attendants.
Queue Length	A *real-time* snapshot of the number of calls waiting for all attendants.
Authorization Codes	The number of authorization codes used for security purposes. For more information, see *Administrator's Guide for Avaya MultiVantage Software.*

Basic Call Management System (BCMS)

Measured Agents Per System	The number of agents the Basic Call Management System (BCMS) is measuring.
Measured Splits/Skills	The number of hunt groups BCMS is measuring.
VDNs	The number of vector directory numbers BCMS is measuring.

```
                                                          (Page 3)
                         SYSTEM CAPACITY
                                                                  System
                                                  Used  Available  Limit
                                                - - - - - - - - - - - - -
           CALL COVERAGE
                   Coverage Answer Groups:          0      750      750
                           Coverage Paths:          7     9992     9999

                       Call Pickup Groups:          0     5000     5000

                             Call Records:          -        -     7712

   CALL VECTORING/CALL PROMPTING
           Total Vector Directory Numbers:          2    19998    20000
       Meet-me Conference VDNs per system:
                       Vectors Per System:          3      509      512
 BSR Application-Location Pairs Per System:          0     1000     1000
```

Screen 8-3. System Capacity (page 3)

Field descriptions (page 3)

Call Coverage

`Coverage Answer Groups`	The number of Coverage Answer Groups. For more information, see *Administrator's Guide for Avaya MultiVantage Software.*
`Coverage Paths`	Coverage Paths — The number of coverage paths which is a path taken when a call goes to coverage. For more information, see *Administrator's Guide for Avaya MultiVantage Software.*
`Call Pickup Groups`	The number of call pickup groups have been administered. For more information, see *Administrator's Guide for Avaya MultiVantage Software.*
`Call Records`	The maximum number of active calls at a given time. This field does not display real-time data, just the system limit and is not administrable.

Call Vectoring/Call Prompting

`Vector Directory Numbers`	The number of system VDNs. For more information, see *DEFINITY Call Vectoring/Expert Agent Selection*.
`Vectors Per System`	The number of vectors per system. For more information, see *DEFINITY Call Vectoring/Expert Agent Selection*.
`BSR Application - Location Pairs Per System`	The number of mappings administered in a multisite network. The maximum number of application-location pairs per system is 1000. For example, for a network of 10 locations, you can assign100 applications; with 50 locations, you can assign 20 applications. For more information, see *DEFINITY Call Vectoring/Expert Agent Selection*.

```
                                                    (Page 4)
                    SYSTEM CAPACITY
                                                                 System
                                              Used  Available  Limit
                                            - - - - - - - - - - - - -
      DATA PARAMETERS
            Administered Connections:           5      123      128
         Alphanumeric Dialing Entries:           0     1250     1250

        DIAL PLAN
                         Extensions:         104    35961    36065
            Miscellaneous Extensions:          25    20292    20317
               UDP Extension Records:          15    49985    50000

              Digital Data Endpoints:          50     7450     7500

             Expansion Port Networks:           2       41       43

            Facility Busy Indicators:          10     9990    10000
```

Screen 8-4. System Capacity (page 4)

Field descriptions (page 4)

Data Parameters

`Administered Connections`	The number of connections between two access or data endpoints. For more information, see *Administrator's Guide for Avaya MultiVantage Software.*
`Alphanumeric Dialing Entries`	For more information, see *Administrator's Guide for Avaya MultiVantage Software*.

Dial Plan

`Extensions`	This includes stations, data endpoints, hunt groups, announcements, TEGs, VDNs, common shared extensions, and code calling IDs.
`Miscellaneous Extensions`	Anything that is not a station, trunk, data module, or attendant. This includes, but is not limited to, PCOL groups, common shared extensions, access endpoints, administered TSCs, code calling IDs, VDNs, LDNs, hunt groups, announcements, and TEGs.
`UDP Extension Records`	The number of 4- or 5-digit extension numbers that allow a user to call from one PBX to another using that number.
`Digital Data Endpoints`	The number of digital serial communication devices that permit the asynchronous transfer of data. This also includes the number of analog adjuncts.
`Expansion Port Networks`	The number of port networks connected to the TDM bus and packet bus of a process port network.
`Facility Busy Indicators`	The number of visual indicators of the busy/idle status of any particular trunk group, hunt group member, or station user. For more information, see *Administrator's Guide for Avaya MultiVantage Software*.

```
                                                                (Page 5)
                              SYSTEM CAPACITY
                                                                          System
                                                        Used  Available  Limit
                                                      - - - - - - - - - - - - -

HUNT GROUPS, SPLITS, OR SKILLS
                        Groups/Splits/Skills:           9      591      600
                 Administered Logical Agents:
      Administered Logical Agent-Skill Pairs:
                        Logged-In ACD Agents:           0     5200     5200
                   Logged-In Advocate Agents:
               Logged-In IP-Softphone Agents:
                    Group Members Per System:          17     9983    10000
                    CMS Measured ACD Members:           0    10000    10000
                      Queue Slots Per System:           2    14998    15000
                        Queue Status Buttons:           0     2000     2000

                  Intercom Groups Per System:           0      256      256
                Modem Pool Groups Per System:           0       63       63
        Personal CO Line (PCOL) Trunk Groups:           0      200      200
```

Screen 8-5. System Capacity (page 5 of 9)

Field descriptions (page 5)

Hunt Groups, Splits, or Skills

`Groups/Splits/Skills`	The number of ACD hunt groups.
`Logged-In ACD Agents`	A *real-time* field displaying the number of agents actually logged in. For example, if an agent is logged into 4 skills (and there are no other agents), then the `Logged-In ACD Agents` field is 1 and the `Group Members Per System` field is 4.
`Group Members Per System`	The number of agent/group pairs.
`CMS Measured ACD Members`	The number of agent pairs being measured by CMS.
`Queue Slots Per System`	The number of hunt group queue positions.
`Queue Status Buttons`	The number of hunt group queue status buttons administered on stations. There are four types of queue status buttons; attendants use the last two queue status buttons: ■ q-calls (Queue Calls) ■ q-time (Queue Time) ■ atd-qcalls (ATD - Queue Calls) ■ atd-qtime (ATD - Queue Time)

`Intercom Groups Per System`	The number of intercom groups set up within your organization.
`Modem Pool Groups Per System`	The number of modem pool groups. For more information, see *Administrator's Guide for Avaya MultiVantage Software*.
`Personal CO Line (PCOL) Trunk Groups`	The number of PCOL trunk groups. For more information, see *Administrator's Guide for Avaya MultiVantage Software*.

```
                                                                (Page 6)
                              SYSTEM CAPACITY
                                                                        System
                                                     Used  Available  Limit
                                                   - - - - - - - - - - - - -

     Recorded Announcement Analog Queue Slots:          0     1256     1256
                                   VAL Boards:          0        3*       3
TEMPORARY SIGNALING CONNECTIONS (TSC)
                            Administered TSCs:          0      128      128
                                NCA-TSC Calls:          0      256      256

                 TRUNKS
                            DS1 Circuit Packs:          9      157      166
                   DS1 With Echo Cancellation:
                         ICHT For ISDN Trunks:          0      576      576
            ISDN CBC Service Selection Trunks:          1      199      200
                                Trunks Groups:         29      637      666
                                 Trunks Ports:         86     3914     4000

        * Available VAL Boards limited by other inserted integ type annc boards
```

Screen 8-6. System Capacity form (page 6)

Field descriptions (page 6)

`Recorded Announcement Analog Queue Slots`	The number of calls in queue for the system's analog announcements.
Maximum VAL Boards	Indicates the maximum number of VAL integrated announcement circuit packs allowed in this system.

Temporary Signaling Connections (TSC)

`Administered TSCs`	The number of allowed Temporary Signaling Connections (TSCs).
`NCA-TSC Calls`	The number of allowed Non-Call Associated TSCs.

Trunks

DS1 Circuit Packs	The number of allowed DS1 circuit packs.
ICHT For ISDN Trunks	The number of Incoming Call Handling Table (ICHT) entries administered for trunk groups.
ISDN CBC Service Selection Trunks	The number of call-by-call trunk groups.
Trunk Groups	The number of trunk groups administered.
Trunk Ports	The number of trunk ports administered.

```
                                                                  (Page 7)
                                SYSTEM CAPACITY
                                                                     System
                                                   Used  Available  Limit
                                                   -----------------------
              VOICE TERMINALS
                 Station Button Memory (units):     0 %    100 %   5260000
                               Station Records:     35    24965     25000
              Stations (includes BRI stations):     29      -         -
                            Stations With Port:     29      -         -
                         Stations Without Port:      0      -         -
                                Other Stations:      6      -         -
                                     TTI Ports:      0      -         -
                           Auto Moves Stations:      0     1000      1000
             ISDN BRI Endpoint and Trunk Ports:      3     6997      7000

          IP Trunks (included in 'Trunk ports'):    13       87       100
Remote Office Trunks (included in 'Trunk ports'):    0        0         0

                    '*' Availability reduced by the number of administered VDNs
```

Screen 8-7. System Capacity form (page 7)

Field descriptions (page 7)

Voice Terminals

Station Button Memory (units)	The percentage of memory being consumed by all administered buttons.
Station Records	The number of resources being used by regular stations, announcements, and music on hold.
Stations (includes BRI Stations)	The number of voice terminals.
Stations With Port	The number of connected voice terminals (stations with specific administered ports).

Stations Without Port	The number of voice terminals not having an administered port, such as AWOH.
Other Stations	The number of ports used as conversion resources, agent login ID, MASI, and analog announcements.
TTI Ports	The number of ports assigned by TTI features.
Auto Moves Stations	The number of stations available to move using ACTR.
ISDN BRI Endpoint and Trunk Ports	The number of ISDN-BRI ports.
IP Trunks (included in 'Trunk ports')	The number of administered IP trunks.
Remote Office Trunks (included in 'Trunk ports')	The number of administered Remote Office trunks.

```
                                                                    (Page 8)
                          SYSTEM CAPACITY

            TOTAL SUBSCRIBED PORTS
                                                                  System
                                                   Used  Available  Limit
                                                 - - - - - - - - - - - - -

                  Station and Trunk Ports:           9      183      192
                        Radio Controllers:           0        0        0
                       Wireless Terminals:           0        0        0
                          XMOBILE Station:
                                    EC500:
                                     DECT:
                                      PHS:

SYSTEM-WIDE REGISTRATION COUNTS
                                          Currently                 System
                                          Registered    Available   Limit
                                          --------------------------------
                            IP Stations:     0            2000       2000
                   IP Attendant Consoles:     0               0          0
                 Remote Office Stations:     12            488        500
```

Screen 8-8. System Capacity (page 8)

Field descriptions (page 8)

Total Subscribed Ports

Radio Controllers	The number of subscribed radio controller circuit packs.
Station and Trunk Ports	The total number of ports in the system.
Wireless Terminals	The number of subscribed wireless terminals.

System-Wide Registration Counts

IP Stations	The number of IP stations currently registered in the system.
Remote Office Stations	The total number of remote office stations currently registered in the system.

```
                                                                (Page 9)
                        CURRENT REGISTRATION COUNTS BY PRODUCT ID

                                 System                                        System
ID        Rel  Regist.   Avail.  Limit    ID        Rel  Regist.   Avail.  Limit
-----------------------------------------------------------------------------------
IP Agent       :                                       :
IP Phone       :                                       :
IP ROMax       :                                       :
IP Soft        :                                       :
IP eCons       :                                       :
```

Screen 8-9. System Capacity (page 9)

```
                                                                (Page 10)
                                SYSTEM CAPACITY

CURRENT SYSTEM INFORMATION

          Software Load: G3V6r.03.0.211.0
   Memory Configuration: G3rV6
         Offer Category: A

LAST TRANSLATION LOADED INFORMATION:

          Software Load: G3V4r.06.0.075.0
   Memory Configuration: G3r (large)
         Offer Category: unknown
```

Screen 8-10. System Capacity (page 10)

Field descriptions (page 10)

Current System Information	
Software Load	The current software load on which the system is running.
Memory Configuration	The system platform.
Offer Category	The system's offer category.
Last Translation Loaded Information	
Software Load	The software load translations saved before upgrade or reboot. Can also be `unknown/no trans` if no flash card is present. Also, if load translations were upgraded from one prior to G3V4 load 71 or early G3V5 loads, `unknown/no trans` displays.
Memory Configuration	The platform on which the translations were saved. Can also be `unknown` if no flash card is present or translations made on old load. This is important because platforms are not always compatible.
Offer Category	The offer category that was set when the last save translation was done before upgrade or reboot. Can also be unknown if no flash card is present or translations made on old load.

display communication-interface

The **display communication-interface** command must contain one of the three qualifiers:

- hop-channels: see ''display communication-interface hop-channels''
- links: see ''display communication-interface links''
- processor-interface: see ''display communication-interface processor-channel''

display communication-interface hop-channels

The **display communication-interface hop-channels** command displays the translation data for hop channels. A hop channel is a bi-directional network channel between two interface links for DCS message hopping. A hop channel is used to tandem DCS messages from one interface link to another interface link.

See also "status link n" for more details.

Action/ Object	Qualifier	Qualifier Description	Logins	Defaults	Feature Interactions
display communication-interface	hop-channels	See above	init inads craft cust rcust	none	none
	links	See above			
	processor-channel	See above			
	print|	Report sent to printer			
	schedule	Command is validated and then a scheduling form displays to schedule execution of the command. The command is then placed in the command queue and is executed at the specified time. The information displayed by the command is sent to the system printer instead of the screen.[1]			

1 Refer to the Report Scheduler and System Printer feature specification for more details.

Output for Hop-channels qualifier

When you enter the command **display comm hop**, the systems displays the Hop Channel Assignment screen, similar to the figure below. The number of the local processor channel, used to hop the interface link channels, is not shown.

```
display communication-interface hop-channels         Page   1 of   4

                            HOP CHANNEL ASSIGNMENT

    Link/Channel A   Link/Channel B       Link/Channel A   Link/Channel B

     3     1           4     12
```

Field descriptions

`Link/Channel A` Identifies the first of the two link/channels joined by the hop channel. Links range from 1 to 16. Channels range from 1 to 64. The link/channel must not be assigned to a local processor channel. Also, the link must not be assigned to a PRI local processor channel.

`Link/Channel B` Identifies the second of the two link/channels joined by the hop channel. Links range from 1 to 16. Channels range from 1 to 64. The link/channel pair must not be assigned to a local processor channel. Also, the link must not be assigned to a PRI local processor channel.

display communication-interface links

This command displays the translation information for each communication interface link. A link is an electronic communication channel transmitted over the Packet Bus for carrying packet-switched data. There are 16 links that terminate at one end on the Packet Interface circuit pack in the SPE. At the physical and link layers, the link terminates at the other end on a port on the PBX's switching matrix. At a higher level, the link continues over a transmission facility to another endpoint, such as a DCS node or AUDIX. The link carries application messages between the SPE and other switches or adjuncts.

Action/ Object	Qualifier	Qualifier Description	Logins	Defaults	Feature Interactions
list communication-interface	***links***	Example: **list communication-interface links**	init inads craft	none	None

Output

The following example shows the output from the **display communication-interface links** command.

```
display communication-interface links                          Page   1 of   2
                                INTERFACE LINKS
Link Enable Est Ext   Type     Destination DTE Conn  Name
            Conn               Number      DCE Mod.
  1: y      n   2991  ETHERNET                       ethernet on link 1
  2: n      n
  3: n      n
  4: n      n
  5: n      n
  6: n      n
  7: n      n
  8: n      n
  9: n      n
 10: n      n
 11: n      n
 12: n      n
 13: n      n
 14: n      n
 15: n      n
 16: n      n
 17: n      n
```

Screen 8-11. Interface links screen

Field descriptions

`Link`	Number of the administered link (data module form).
`Enable`	Yes (`y`) or no (`n`) depending upon data module administration (Processor Interface, X.25, Ethernet, and PPP).
`Est. Conn.`	Establish Connection data from the data module forms (Processor Interface, X.25, and PPP).
`Ext`	Extension number of the local data module for this link.
`Type`	Protocol for this link: ■ `bx.25` (Processor Interface and X.25) ■ `ppp` ■ `ethernet`
`Destination Number`	Destination of the link as administered on the data module forms (Processor Interface, X.25 and PPP).
`DTE/DCE`	Processor Interface administration from data module form (Processor Interface only).
`Conn. Mod.`	Connected Data Module administration from data module form (Processor Interface and X.25 only)
`Name`	Administered name from the data module forms (Processor Interface, X.25, Ethernet, and PPP)

display communication-interface processor-channel

This command displays the translation information for each of the local processor channels. A processor channel is one several data streams which are multiplexed by the X.25 protocol onto a single data link. The system has 128 total processor channels; up to 64 can be assigned to a single link.

Action/ Object	Qualifier	Qualifier Description	Logins	Defaults	Feature Inter-actions
display communication-interface processor-channel	***number***	Example: **display communication-interface processor channel 125**	init inads craft	none	none

Output

The following example shows the output from the **display communication-interface processor-channel** command.

```
                                                                    Page 1 of X
                          PROCESSOR CHANNEL ASSIGNMENT

Proc                  Gtwy    Interface      Destination        Session    Mach
Chan  Enable  Appl.    To  Mode  Link/Chan   Node        Port  Local/Remote  ID
  1:     _  ________ ___   _    __  _____  _________  0____  ___   ___    __
  2:     _  ________ ___   _    __  _____  _________  0____  ___   ___    __
  3:     _  ________ ___   _    __  _____  _________  0____  ___   ___    __
  4:     _  ________ ___   _    __  _____  _________  0____  ___   ___    __
  5:     _  ________ ___   _    __  _____  _________  0____  ___   ___    __
  6:     _  ________ ___   _    __  _____  _________  0____  ___   ___    __
  7:     _  ________ ___   _    __  _____  _________  0____  ___   ___    __
  8:     _  ________ ___   _    __  _____  _________  0____  ___   ___    __
  9:     _  ________ ___   _    __  _____  _________  0____  ___   ___    __
 10:     _  ________ ___   _    __  _____  _________  0____  ___   ___    __
 11:     _  ________ ___   _    __  _____  _________  0____  ___   ___    __
 12:     _  ________ ___   _    __  _____  _________  0____  ___   ___    __
 13:     _  ________ ___   _    __  _____  _________  0____  ___   ___    __
 14:     _  ________ ___   _    __  _____  _________  0____  ___   ___    __
 15:     _  ________ ___   _    __  _____  _________  0____  ___   ___    __
 16:     _  ________ ___   _    __  _____  _________  0____  ___   ___    __
```

Field descriptions

`Proc Chan`	Displays the BX.25 virtual channel number or the TCP/IP listen port channel to carry this processor (virtual) channel.
`Enable`	Type **y** to enable a processor channel. Type **n** to disable a processor channel.
`Appl.`	Identifies the switch application used over this link. The application gateway is used for conversion between ISDN and either TCP/IP or BX.25. Use the **gtwy-tcp** entry for conversion between BX.25 and TCP/IP. Valid entries are: audix, dcs, fp-mwi, gateway, gtwy-tcp, mis, msaamwl, msaclk, msahlwc, msallwc, msamcs, qs-mwi, blank
`Gtwy To`	Identifies which processor channel the given processor channel is serving as a gateway to. Valid entries are a number between 1-(maximum number of processor channels), or blank.
`Mode`	Identifies whether the IP session is passive (client) or active (server). This field must be blank if the type of interface link is **x.25** (r model) or **procr-intf** (si model). This field cannot be blank if the type of interface link is **ethernet** or **ppp**. Valid entries are **client**, **server**, or blank.
`Interface Link`	Identifies the physical link carrying this processor (virtual) channel. Links numbered 1 through (4 times the number of PI circuit packs) for the si model can be either **x.25** or **tcp/ip**. The rest of the links (up to 25) must be **tcp/ip**.
`Interface Chan`	Identifies the BX.25 virtual channel number or the TCP/IP listen port channel to carry this processor (virtual) channel. The channel number 0 means any port can be used. Valid entries for link type x.25 are **1**-**64**; for Ethernet or ppp, **0**, **5000**-**64500**.
`Destination Node`	Identifies the switch or adjunct at the far end of this link. Enter an adjunct name, switch name, far end IP address, node ID, or leave blank for services local to this switch.
`Destination Port`	Identifies the port number of the destination. The number 0 means any port can be used. Valid entries are **0**, **5000**-**64500**.
`Session Local`	Field ported forward from R6.
`Session Remote`	Field ported forward from R6.
`Mach ID`	Field ported forward from R6.

display disabled-tests

The **display disabled-tests** command lists the numbers for all maintenance tests that have been disabled by INADS. These tests are not available for background or demand testing.

Action/ Object	Qualifier	Qualifier Description	Logins	Defaults	Feature Interactions
display disabled-tests	***print***	Report sent to printer	init inads craft cust rcust	none	none
	schedule	Command is validated and then a scheduling form displays to schedule execution of the command. The command is then placed in the command queue and is executed at the specified time. The information displayed by the command is sent to the system printer instead of the screen.[1]			

1 Refer to the Report Scheduler and System Printer feature specification for more details.

Output

The following example shows the output from the **display disabled-tests** command.

```
display disabled-tests                                    SPE A


                          DISABLED TEST INFORMATION

         Test Number

         710


Command successfully completed
```

display errors

This command creates an Alarm Report from a user-option screen to select the report parameters. The system creates the reports from the logs of the maintenance subsystem, which monitors the system hardware and logs problems as errors or alarms.

Errors can result from in-line firmware errors, periodic tests, failures detected while executing a test command, software inconsistency, or a data audit discrepancy.

System Reboots and the Error Logs

The system saves the alarm and error logs to the *active* SPE memory card if any of the following events occur:

— The **save translation** command is executed.

— Translations are saved as part of scheduled maintenance.

— A reboot

— The PPN is about to lose all power after having been on battery backup.

The attempt to save the alarm and error logs may be unsuccessful if the MSS is not available.

Whenever the system reboots, the logs are restored from the SPE disk that becomes active with the reboot. Since the logs are saved to the disk on the SPE that was active *before* the reboot, the versions restored at reboot time may not be current. This condition occurs if:

— The attempt to save at reboot did not succeed.

— The SPE disk that is rebooted is not the same disk to which the logs were last saved.

In such a case, the logs do not contain the most recent errors and alarms. To determine if the restored logs are complete, look for indications that would have preceded the reboot.

System resets, less severe than a reboot, rarely affect the error and alarm logs.

NOTE:
If the error and alarm logs contain SYSTEM errors, then use the **display initcauses** command to search for information that system could *not* log during reset operation.

Action/ Object	Qualifier	Qualifier Description	Logins	Defaults	Feature Interactions
display errors	***high resolution***	Highlights the time stamps on the Error Report for the first and last occurrences of the error.	init inads craft cust nms browse	all errors displayed	none
	print	Report sent to printer			
	schedule	Command is validated and then a scheduling form displays to schedule execution of the command. The command is then placed in the command queue and is executed at the specified time. The information displayed by the command is sent to the system printer instead of the screen.[1] Examples: **display errors** **display errors print** **display errors schedule** **display errors high-resolution print**			

1 Refer to the Report Scheduler and System Printer feature specification for more details.

Input form

When you enter the **display errors** command, the system first displays the options screen. Select the options you want to view on the report. The figure below is an example of the options screen for an Error Report.

```
display errors                                                Page   1 of   1
                                ERROR REPORT
     The following options control which errors will be displayed.
         ERROR TYPES
            Error Type: _____          Error List: active-alarms
         REPORT PERIOD
            Interval: _       From: __/__/__:__ To: __/__/__:__
         EQUIPMENT TYPE ( Choose only one, if any, of the following )
                              Cabinet: __
                         Port Network: __
                         Board Number: ____
                                 Port: ______
                             Category: ________
                            Extension: _____
               Trunk ( group/member ): ___/___
```

Field descriptions

`Error Type`	Enter a specific error type; press HELP in this field to view a list of codes. If the field is blank, the system displays all errors.

`Error List`	Enter one:
	`active-alarms`
	`errors`
	`cleared-errors`
	The title for the Hardware Error Report includes the name of the selected error list.

`Interval`	Enter one: `m` = last month `h` = last hour `d` = last day `w` = last week `a` = all
`From`	Enter 2-digit numbers for the month/day/year (Example: 01/01/97). The default is the earliest time of the existing error records in the log.
`To`	Enter 2-digit numbers for the month/day/year (Example: 01/01/97). The default is the current date.
`Cabinet`	Enter 1, 2, or 3 (the administered number)
`Port Network`	Enter 1, 2 or 3
`Board Number:`	Enter the **PCSS** location. Example: 01A20
`Port`	Enter the **PCSSpp** location. Example: 01A2031
`Category`	Enter the object code for the equipment category. Press HELP in this field to view a list of the object codes
`Extension`	Enter the extension number.
`Trunk`	Enter a group number or a group and member number: ■ Enter *only* the **group** number (01-99) to display *all* members in the group. Example: 01/__ ■ Enter *both* the **group** number (01-99) and **member** number (01-99) to display a *specific* member in a group. Example: 01/99.

Form output

After completing the options screen, the system displays a 1- or 2-page Hardware Error Report. To toggle between the pages and to exit the report, use the keys described below:

- For 513 and 715 terminals, use **F8** for NEXT PAGE and PREV PAGE commands
- For all other terminals, use **F7** for NEXT PAGE and PREV PAGE commands
- Use **Esc** for the `CANCEL` command to exit the report.

The figure below is an example of an Hardware Error Report -- Active Alarms, **without** the high-resolution qualifier in the command line.

```
display errors                                                  Page  1   SPE A

                     HARDWARE ERROR REPORT - ACTIVE ALARMS

Port      Mtce     Alt     Err   Aux     First       Last      Err Err Rt/ Al Ac
          Name     Name    Type  Data    Occur       Occur     Cnt Rt  Hr  St
01C0702   ANL-LINE 311     257         01/31/09:20 01/31/20:26 255 256 255 a  y
01C0701   ANL-LINE 1051    257         01/31/20:26 01/31/20:26 4   0   4   a  y
01C0703   ANL-LINE 1053    257         01/31/20:26 01/31/20:26 4   0   4   a  y
01A       TDM-CLK          0     0     01/31/20:34 01/31/20:34 1   0   1   a  n
01C1505   CO-TRK   078/001 3329  57408 01/31/20:26 01/31/20:27 5   300 5   a  y
01C1505   CO-TRK   078/001 1537        01/31/20:26 01/31/20:28 5   150 5   a  y
02A0201   TONE-PT          0           01/31/20:34 01/31/20:34 1   0   1   a  y
PN 02B    TDM-BUS          18    0     01/31/14:53 01/31/21:12 1   0   1   a  n

Command successfully completed
```

Field descriptions

`Port`

Lists the location codes for the alarmed object, as follows:

- Circuit packs locations: cabinet-carrier-[slot]-[circuit]. Example: 01C702.
- Port network locations: port network number-bus. Example: **PN 02B**. PN 02 = Port Network (PN) number and A or B = bus.

`Maintenance Name`

The name of the maintenance object.

`Alt Name`

Identifies the location of maintenance object, as follows:

- Station = extension number
- Trunk = Group number (78/__) or group and member numbers (78/01)
- Private CO Line = private CO line (P) and group number (P/xxx)

`Error Type`	Error number for the type of problem encountered. Use this error number in conjunction with the logical name information to determine the exact nature of the error.
`Aux Data`	Additional information concerning the error condition. Like the error type, this data is specific to the maintenance object type. However, only the most recent value of the auxiliary data is retained for each error record.
`First Occur`	Displays the month, day, hour, and minute (and second if the high-resolution option is used) that the error was first recorded.
`Seq Cnt`	Sequence Count - Indicates the order of errors logged within a second for the time stamps associated with the first occurrence and last occurrence of an error. This information is displayed only if the **high-resolution** command line option is entered. There may be gaps for the sequence numbers within a given second, since the last occurrence of an error may replace an existing entry that had been assigned the missing sequence number. Gaps may also appear in the numbers since sequence counts are also used with software event information not shown in the hardware error log.
`Last Occur`	Displays the month, day, hour, and minute (and second if the high-resolution line option is used) of the most recent error. If the system is unable to retrieve the time of day when the error occurred, a ‘dummy’ date is stamped in the log and appears as: **00/00/01:07**.
`Err Cnt`	Error Count - The total number of times that the error type has occurred for this maintenance object. If the number of errors exceeds 3 digits, the system enters the number **256**, which indicates that a larger number of errors occurred, but could not be displayed correctly.
`Err Rt`	Error Rate - The average rate at which the errors occurred from the first occurrence to the present. If the number of errors exceeds 3 digits, the system enters the number **256**, which indicates that a larger number of errors occurred, but could not be displayed correctly.
`Rt/Hr`	Rate per Hour - An approximation of the rate that this error occurred in the last hour.If the number of errors exceeds 3 digits, the system enters the number **256**, which indicates that a larger number of errors occurred, but could not be displayed correctly.
`Al St`	Alarm Status - A character indicating the status of this MO in the error and alarm logs. The allowed values are: `a` = Active `r` = Resolved `c` = Resolved as a result of the long “clear” option `s` = Resolved; software-requested system restart `t` = Resolved; technician-requested system restart `n` = Not alarmed
`Ac`	Active? - A **y** (yes) entry indicates the maintenance object is still active. A **n** (no) entry indicates the object is no longer a problem.

The figure below is an example of an Hardware Error Report -- Active Alarms, using the high-resolution qualifier.

When you enter the command **display errors high-resolution**, the system adds the Seq Cnt (sequence count) column. The number in the column indicates the order of errors logged within a second for the time stamps associated with the first occurrence and the last occurrence of an error. Refer to the field description above for more details.

```
display errors high-resolution                                  Page  1   SPE A

             HIGH RESOLUTION HARDWARE ERROR REPORT - ACTIVE ALARMS

Port     Mtce     Alt     Err   Aux         First   Seq       Last    Seq Err Al
         Name     Name    Type  Data        Occur   Cnt       Occur   Cnt Cnt St
01C0702  ANL-LINE 311     257         01/31/09:20:21 1  01/31/20:26:05 1  255 a
01C0701  ANL-LINE 1051    257         01/31/20:26:18 1  01/31/20:26:18 7  4   a
01C0703  ANL-LINE 1053    257         01/31/20:26:18 2  01/31/20:26:18 8  4   a
01A      TDM-CLK          0     0     01/31/20:34:35 1  01/31/20:34:35 1  1   a
01C1505  CO-TRK   078/001 3329  57408 01/31/20:26:07 1  01/31/20:27:28 1  5   a
01C1505  CO-TRK   078/001 1537        01/31/20:26:52 1  01/31/20:28:41 1  5   a
02A0201  TONE-PT          0           01/31/20:34:28 1  01/31/20:34:28 1  1   a
PN 02B   TDM-BUS          18    0     01/31/14:53:03 1  01/31/21:12:22 1  1   a

Command successfully completed
```

display events

A vector event is the occurrence of something unexpected during a vector-routed call due to resource exhaustion or faulty vector programming. For example, route-step failures are typically due to the programming of an invalid extension. These types of failures are not due to faulty hardware or system software error and do not constitute incorrect feature operation. This command allows you to diagnose and correct vectoring problems due to the above-mentioned causes. See *DEFINITY Communications System Generic 3 Call Vectoring and Expert Agent Selection (EAS) Guide*, 555-230-520, for information on how to interpret this report.

Action/Object	Qualifier	Qualifier Description	Logins	Defaults	Feature Interactions
display events			init inads craft cust rcust	none	none

Input form

The following entry form is displayed to allow limiting the report to events of a certain type or from a certain time period. Enter the desired parameters and press Enter.

```
display events                                Page  1 of  1   SPE B

                         EVENT REPORT

  The following options control which events will be displayed.

        EVENT CATEGORY

           Category: denial

        REPORT PERIOD

           Interval: _a_    From: __/__/__:__ To: __/__/__:__


        SEARCH OPTIONS

                          Vector Number: ___
                             Event Type: _____
```

Field descriptions

`Category`	Select or type “vector” or “denial” to specify the type of event report that you want.
`Report Period`	View only those vector events that occurred within a specific time period. If left blank, all recorded vector events are displayed.
`Interval:`	Displays all events within the last time period. Enter the first letter of one of the following selections: *a*ll, *m*onth, *d*ay, *h*our, *m*inute.
`Start/Stop Time`	Start and end times of the interval to be reported in 24-hour notation.
`Vector Number`	Vector number (1-256) for which events is reported; if left blank, events for all vectors are reported.
`Event Type`	Specific types of events are associated with numbers from 50000 to 50999. Entering one of these numbers limits the report to events of this type. If left blank, events for all types are reported.

Output

See *DEFINITY Communications System Generic 3 Call Vectoring and Expert Agent Selection (EAS) Guide*, 555-230-520, for more information on how to interpret this report. In particular, the Event Data 2 field are associated with possible causes and repair strategies for the event.

Event Type	The event identification number that points to a specific piece of software code (see Table 8-2)
Event Description	A 25-character string describing the problem (see Table 8-2)
Event Data 1	The station UID that is attempting to register (see Table 8-2)
Event Data 2	The IP address of the station that is attempting to register (see Table 8-2)
First Occur	The time and date when this event first occurred
Last Occur	The time and date when this event last occurred
Evnt Cnt	The number of occurrences of the event between the First Occur and Last Occur times

Table 8-2 lists the Event Type, the text that appears in the Event Description field, a further explanation of the condition, and the type of data in the Event 1 and Event 2 fields.

Table 8-2. Denied IP events

Event Type	Event Description	Explanation	Event Data 1	Event Data 2
1907	IP RRJ-Invalid RAS addr	Registration Rejected because the RAS address in the RRQ is invalid.	0	IP address that sent the RRQ
1908	IP RRJ-Invld call SigAddr	IP Registration Rejection because signalling address in the RRQ is invalid.	0	IP address
1909	IP RRJ-RemoteOfc misadmin	Registration rejected because: 1. Remote Office is enabled on the Signaling Group screen, but the RRQ is not from a supported Remote Office product. 2. The RRQ is from a supported Remote Office product, but Remote Office not enabled on the Signaling Group screen. 3. Remote Office is enabled on the Signaling Group screen, but the Terminal Type in the RRQ is not valid.	0	IP address
1910	IP RRJ-H323 UserObj undef	Registration rejected because there is no H323 User Object.	0	IP address
1911	IP RRJ-Exceed max endpts	Registration rejected because the capacity for either registered endpoints or Remote Office endpoints is exceeded. Check maximum allowed in the system on page 1 of the System Parameters Customer Options screen.	0	1st part: # of RO stations; 2nd part: # of IP stations, respectively.
1912	IP RRJ-Exceed ProdID/Ver	Registration rejected because the maximum number of registered endpoints of a specific product ID and version is exceeded. Check the limit on the System Parameters Customer Options screen.	T/S: IP Product from the System Parameters Customer Options screen	1st part: registered limit; 2nd part: actual count, respectively.
1913	IP RRJ-Invalid ProdID/Ver	Registration rejected because invalid Product ID / Version. Registering Application's product ID is not administered or no Product ID in RRQ message.	T/S: Product ID of the registering application	Major version number

Continued on next page

Table 8-2. Denied IP events — *Continued*

Event Type	Event Description	Explanation	Event Data 1	Event Data 2
1914	IP RRJ-ProdID search fail	Registration rejected because the search for registering application's Product ID failed.	T/S: Product ID of the registering application	Major version number
1915	IP RRJ-Invalid endpt/Ver	Registration rejected because the endpoint version is not compatible with the gatekeeper version.	IP address	Major version number in 2nd byte; minor version number in low byte
1916	IP RRJ-No H323 NonStdData	Registration rejected; non-standard data are missing in the RRQ from authenticating application.	0	IP address
1917	IP RRJ-Invld H323 ObjID	Registration rejected; Object ID in the RRQ is invalid.	Object ID	IP address
1918	IP RRJ-Invld H225 NSData	Registration rejected; cannot decode H225 non-standard data (NSD) message.	0	IP address
1919	IP RRJ-Bad H225 NSDchoice	Registration rejected; unexpected NSD message received from registering application.	NSD choice	IP address
1920	IP RRJ-TTI: new LM fail	Registration rejected; failure in creating new Login Manager. Possible causes are: ■ No available heap memory to create LoginMgr ■ Cannot start LoginMgr timer ■ Clock not set	UID	IP address
1921	IP RRJ-IP-TTI port fail	Registration rejected; failure when inserting IP TTI port.	UID	IP address
1922	IP RRJ-TTI or RO inactive	Registration for an IP set with TTI service rejected. Possible causes: ■ TTI is not enabled on the System Parameters Customer Options screen. ■ Remote Office is not enabled on the System Parameters Feature Options screen.	0	IP address

Continued on next page

Table 8-2. Denied IP events — *Continued*

Event Type	Event Description	Explanation	Event Data 1	Event Data 2
1923	IP RRJ-No E164 number	Registration rejected; no valid E.164 phone number available. The extension is not administered.	UID	IP address
1924	IP RRJ-No GRQ msg rcvd	Registration rejected; did not receive a Gatekeeper Request message	UID	IP address
1925	IP RRJ-RQ: new LM fail	Registration rejected; failure creating a new Login Manager. Possible cause: ■ No available heap memory to create LoginMgr ■ Cannot start LoginMgr timer ■ Clock not set	UID	IP address
1926	IP RRJ-Authentication fail	Registration rejected: authentication failure. The password that the user entered and the administered password on the station screen do not match.	UID	IP address
1927	IP RRJ-Invld station type	Registration rejected: ■ invalid set type ■ no Remote Office or IP Softphone administration on the station screen	UID	Type
1928	IP RRJ-StnTyp/Protocl err	Registration rejected: station type and call signalling protocol are inconsistent. The IP Softphone should be defined as either of the following: ■ DCP ext with call control equal to IP Softphone ■ H.323 ext with call control equal to none	UID	Endpoint type (3rd and 2nd nyble); call signalling protocol (low nyble)
1929	IP RRJ-No idx for MMCmplx	Registration rejected: dual-connected DCP set user record is missing the index for the multimedia complex.	UID	IP address

Continued on next page

Table 8-2. Denied IP events — *Continued*

Event Type	Event Description	Explanation	Event Data 1	Event Data 2
1930	IP RRJ-No voice path spec	Registration rejected: endpoint has neither an associated multimedia extension nor a specified voice path, hence, no audio path. Either: ■ add a Media Complex Extension on the station screen or ■ register as a telecommuter.	UID	IP address
1931	IP RRJ-H323 ext is MMCmpx	Registration rejected: this H.323 extension is administered as a Media Complex extension on a non-H.323 (for example, a DCP) set.	UID	IP address
1932	IP RRJ-Ext has data modl	Registration rejected: the extension is administered as a data module.	UID	IP address
1933	IP RRJ-IP addr mismatch	Registration rejected: the H.323 application is not at the same IP address as the authenticating application.	UID	IP address of registering endpoint
1934	IP RRJ-Ext already reg	Registration rejected: extension is already registered.	UID	IP address
1935	IP RRJ-Not Remote Ofc ext	Registration rejected: Remote Office is not administered for this extension on the station screen.	UID	IP address
1936	IP RRJ-Invld RO anlg stn	Registration rejected: invalid analog station type.	UID	IP address
1937	IP RRJ-RemOfc not admin	Registration rejected: Remote Office endpoint ■ is not administered or ■ is of unknown station type	UID	IP address
1938	IP RRJ-Immediate re-reg	Immediate re-registration is rejected when a registration or unregistration is in progress for an extension.	UID	IP address
1939	IP RRJ-Failure moving ext	Registration rejected: failure while trying to force the unregistration of an extension in the process of moving it to another port.	UID	IP address
1940	IP RRJ-Duplicate ext	Registration rejected as a duplicate extension.	UID	IP address
1941	IP KA-from invld endpt ID	Keep Alive registration request rejected: invalid endpoint identifier.	Endpoint UID	IP address

Continued on next page

Table 8-2. Denied IP events — *Continued*

Event Type	Event Description	Explanation	Event Data 1	Event Data 2
1942	IP KA-from unreg user	Keep Alive registration request rejected: unregistered extension.	Endpoint UID	IP address
1943	IP-KA-from unreg SigGrp	Keep Alive registration request rejected: unregistered signalling group.	Endpoint UID	IP address
1944	IP RRJ-PSA merge failure	Registration rejected: PSA merge failure (internal software error).	UID	IP address
1945	IP RRJ-New IP user fail	Registration rejected: failure to construct new H.323 or IP Softphone user (internal software error.) First value is NULL. Second value is IP address.	0	IP address
1946	IP RRJ-PSA merge failure	Registration rejected: PSA merge operation failed (internal software error).	0	IP address
1947	IP RRJ-PSA unmerge fail	Registration rejected: PSA unmerge operation failed (internal software error).	UID	IP address
1948	IP RRJ-Complete pend reg	Registration rejected: failure to obtain a station user record (internal software error -- corrupt translation).	UID	IP address
1949	IP RRJ-Build KARCF msg	Registration rejected: failure to build a KeepAlive Registration Confirm (KARCF) message (internal software error).	0	IP address
1950	IP RRJ-Build RCF msg	Registration rejected: failure to build a Registration Confirm (RCF) message (internal software error).	0	IP address
1951	IP GRJ-Invld IP addr/port	Gatekeeper request rejected: invalid destination IP address and port in the GRQ.	0	IP address
1952	IP GRJ-Invld gatekeeperID	Gatekeeper request rejected: message is not for this gatekeeper. First value is gatekeeper ID. Second value is IP address.	Gatekeeper ID	IP address
1953	IP GRJ-Invld auth capblty	Gatekeeper request rejected: the gatekeeper supports a capability that the registering endpoint does not.	0	IP address

Continued on next page

Table 8-2. Denied IP events — *Continued*

Event Type	Event Description	Explanation	Event Data 1	Event Data 2
1954	IP GRJ-Invld auth algrthm	Gatekeeper request rejected: no compatible authentication algorithm exists between the endpoint and the gatekeeper.	0	IP address
1955	IP GRJ-Bld GCF:Gatewy/MCU	Gatekeeper request rejected: failure to build a GateKeeper Confirm (GCF) message for a GateWay/MCU (internal software error).	0	IP address
1956	IP GRJ-Bld GCF:TTI	Gatekeeper request rejected: failure to build a GateKeeper Confirm (GCF) message for an un-named endpoint registration (internal software error).	0	IP address
1957	IP GRJ-GK will not host	Gatekeeper request rejected: gatekeeper is unwilling to host endpoint because: ■ no alias address has been provided ■ TTI is in incorrect state (for example, TTI is not enabled for voice)	TTI state	IP address
1958	IP GRJ-Invalid extension	Gatekeeper request rejected: extension is not administered.	Either extension number or 0	IP address
1959	IP GRJ-No stn user record	Gatekeeper request rejected: no station user record exists for registering this user (internal software error).	UID	IP address
1960	IP GRJ-GRQ: new LM fail	Gatekeeper request rejected because of failure to create new LoginMgr. Possible causes ■ No available heap memory to create LoginMgr ■ Cannot start LoginMgr timer ■ Clock not set	UID	IP address
1961	IP GRJ-Build GCF msg	Gatekeeper request rejected: failure to build a GateKeeper Confirm (GCF) message (internal software error).	UID	IP address
1962	IP LRJ-No H323 sig group	Location Request rejected: no H.323 signalling group administered.	UID	IP address

Continued on next page

Table 8-2. Denied IP events — *Continued*

Event Type	Event Description	Explanation	Event Data 1	Event Data 2
1963	IP LRJ-Build LCF msg	Location Request rejected: failure to build a Location Request Confirm (LCF) message (internal software error).	UID	IP address
1964	IP DRJ-Null UserID	Disengage Request rejected: the endpoint ID could not be converted to a UID.	UID	IP address
1965	IP DRJ-Bld DCF:Gatewy/MCU	Disengage Request rejected: failure to build Disengage Request Confirm (DCF) message for a gateway or MCU (internal software error).	UID	IP address
1966	IP DRJ-Endpt not reg	Disengage Request rejected: endpoint is not registered.	UID	IP address
1967	IP DRJ-Build DCF msg	Disengage Request rejected: failure to build a Disengage Request Confirm (DCF) message for a non-gateway or MCU user (internal software error).	UID	IP address
1968	IP BRJ-Null UserID	Bandwidth Request rejected: invalid endpoint ID was received.	0	IP address
1969	IP BRJ-Bld BCF:Gatewy/MCU	Bandwidth Request rejected: failure to build a Bandwidth Request Confirm (BCF) message for a Gateway or MCU (internal software error).	UID	IP address
1970	IP BRJ-Endpt not reg	Bandwidth Request rejected: the endpoint is not registered.	UID	IP address
1971	IP BRJ-Build BCF msg	Bandwidth Request rejected: failure to build a Bandwidth Request Confirm (BCF) message for a non-Gateway or MCU user (internal software error).	UID	IP address
1972	IP BRJ-No H323 user	Bandwidth Request rejected: H.323 user object does not exist (internal software error).	UID	IP address
1973	IP BRJ-Call non-existent	Bandwidth Request rejected: request is made for a non-existing call.	UID	IP address
1974	IP BRJ-Bandwdth rqst fail	Bandwidth Request rejected: because of unexpected return code from bandwidth request.	UID	IP address
1975	IP ARJ-Null UserID	Admission Request rejected: received invalid endpoint ID.	NIL UID	IP address

Continued on next page

Table 8-2. Denied IP events — *Continued*

Event Type	Event Description	Explanation	Event Data 1	Event Data 2
1976	IP ARJ-Endpt not reg	Admission Request rejected: the endpoint is not registered.	UID	IP address
1977	IP ARJ-No avail B-channel	Admission Request rejected: no B-channel is available for the call.	UID	IP address
1978	IP ARJ-Bld ACF:Gatewy/MCU	Admission Request rejected: because of failure to build an Admission Request Confirm (ACF) message for a Gateway or MCU (internal software error).	UID	IP address
1979	IP ARJ-Not an H323 user	Admission Request rejected: request was received from a non-H.323 user.	UID	IP address
1980	IP ARJ-Stn not in service	Admission Request rejected: station is not in service.	UID	IP address
1981	IP ARJ-Build ACF msg	Admission Request rejected: failure to build an Admission Request Confirm (ACF) message for a non-Gateway or MCU user (internal software error).	UID	IP address
1982	IP ARJ-No H323 user	Admission Request rejected: H.323 user object does not exist (internal software error).	UID	IP address
1983	IP ARJ-CRV already in use	Admission Request rejected: call reference value (CRV) is already in use by another call.	UID	IP address
1984	IP ARJ-CRV does not exist	Admission Request rejected: this call reference value (CRV) does not exist.	UID	IP address
1985	IP ARJ-CRV already in use	Admission Request rejected: call reference value (CRV) is already in use by another call. An ARQ has been received while an earlier one is still pending.	UID	IP address
1986	IP ARJ-Insuff bandwidth	Admission Request rejected: insufficient bandwidth available to support this call.	UID	IP address
1987	IP ARJ-Admissn rqst fail	Admission Request rejected: unexpected return code from Admission Request (internal software error).	UID	IP address
1988	IP URJ-Null UserID	Unregistration Request rejected: received invalid endpoint ID.	0	IP address

Continued on next page

Table 8-2. Denied IP events — *Continued*

Event Type	Event Description	Explanation	Event Data 1	Event Data 2
1989	IP URJ-Endpt not reg	Unregistration Request rejected: endpoint is not registered.	UID	IP address
1990	IP URJ-No endpoint ID	Unregistration Request rejected: no endpoint ID provided.	0	IP address
1991	IP URJ-GW/MCU is not reg	Unregistration Request rejected: URQ received from a Gateway or MCU that is not registered.	UID	IP address
1992	IP URJ-No H323 sig group	Unregistration Request rejected: there is no H.323 user for the signalling group (internal software error).	UID	IP address
1993	IP URJ-No non-std data	Unregistration Request rejected: no non-standard data in the URQ.	UID	IP address
1994	IP URJ-NSD has invld OID	Unregistration Request rejected: the non-standard data (NSD) from the registered application has an invalid object ID in the URQ.	UID	IP address
1995	IP URJ-Can't decode NSD	Unregistration Request rejected: failure to decode non-standard data (NSD) in the URQ.	UID	IP address
1996	IP URJ-Unexpected NSD msg	Unregistration Request rejected: unexpected non-standard data (NSD) in the URQ from the registered application endpoint.	UID	IP address
1997	IP URJ-User is on a call	Unregistration Request rejected: the user is on a call.	UID	IP address
1998	IP URJ-PSA unmerge failed	Unregistration Request rejected: PSA unmerge operation failed (internal software error).	UID	IP address
1999	IP URJ-PSA merge failed	Unregistration Request rejected: PSA merge operation failed (internal software error).	UID	IP address
2000	IP URJ-No stn user record	Unregistration Request rejected: no station user record exists for unregistering user (internal software error).	UID	IP address
2001	IP URJ-TTI op failed	Unregistration Request rejected: unexpected TTI return code.	UID	IP address

Continued on next page

Table 8-2. Denied IP events — *Continued*

Event Type	Event Description	Explanation	Event Data 1	Event Data 2
2002	IP URJ-Build UCF msg	Unregistration Request rejected: failure to build an unregistration request confirm (UCF) message (internal software error).	0	IP address
2003	IP URJ-PSA unmerge failed	Unregistration Request rejected: PSA unmerge operation failed (internal software error).	UID	IP address
2004	IP URJ-No stn user record	Unregistration Request rejected: PSA unmerge operation failed (internal software error).	UID	IP address
2005	IP URJ-PSA unmerge failed	Unregistration Request rejected: PSA unmerge operation failed (internal software error).	UID	IP address
2006	IP FURQ-no H.323 ext reg	Force Unregistration Request. Received a KeepAlive RRQ from a dual connect endpoint whose H.323 extension is not registered (cannot make calls). Re-register the endpoint.	UID	IP address
2007	IP FURQ-User, no sig conn	Force Unregistration Request. Unregister user because there is no signalling connection. RAS is alive, but the signalling connection has gone down (user cannot make calls). Re-register the endpoint.	UID	IP address
2008	IP FURQ-H323, no sig conn	Force Unregistration Request. Unregister associated H.323 user because there is no signalling connection. Re-register the endpoint.	UID	IP address
2009	IP FURQ-Move user	Force Unregistration Request. Extension is already registered, but received a force login RRQ. Send a URQ to the existing extension.	UID	IP address

Continued on next page

Table 8-2. Denied IP events — *Continued*

Event Type	Event Description	Explanation	Event Data 1	Event Data 2
2010	IP FURQ-Restart cleanup	Force Unregistration Request. Instruct the RAS manager to cleanup a UID that had just been registered prior to: ■ a system reset ■ a system restart ■ the CLAN circuit pack is pulled from its slot ■ an ethernet cable is removed from the CLAN circuit pack ■ the CLAN circuit pack is disabled on the IP Interfaces screen.	UID	0
2011	IP FURQ-Aged H323 ext	Force Unregistration Request. Unregister H.323 user that aged out. Endpoint's time-to-live (TTL) expired without receiving a KeepAlive RRQ.	H.323 UID	IP address
2012	IP FURQ-Aged Endpt-no KA	Force Unregistration Request. Unregister endpoint that has aged out. Endpoint's time to live (TTL) expired without receiving a keep-alive RRQ.	UID	IP address
2013	IP FURQ-SigGrp removed	Force Unregistration Request. An H.323 Gateway (administered as a signalling group) is registered. Unregister the Gateway before removing the administered signalling group.	Gateway UID	IP address
2014	IP FURQ-Siggrp changed	Force Unregistration Request. Changes have been made to a registered H.323 Gateway (administered as a signalling group). Unregister the Gateway.	Signalling group	IP address
2015	IP FURQ-Ext removed	Force Unregistration Request. Unregister user because the extension has been removed.	IP User-UID	0
2016	IP FURQ-IPusr is sftphone	Force Unregistration Request. A user has PSA'ed an extension that was registered as an IP endpoint.	IP User-UID	0
2017	IP FURQ-Records exhausted	Force Unregistration Request. Unregister the LAN port if there are no station user-records remaining.	IP User-UID	0

Continued on next page

Table 8-2. Denied IP events — *Continued*

Event Type	Event Description	Explanation	Event Data 1	Event Data 2
2018	IP FURQ-Mtc: H323/Vphone	Force Unregistration Request. Maintenance has unregistered an H.323 or IP Softphone station.	UID	0
2019	IP FURQ-Mtc: Remote Max	Force Unregistration Request. Maintenance has unregistered a Remote Max station.	UID	0
2020	IP FURQ-Mtc:RemOfc TTI	Force Unregistration Request. TTI background maintenance task has requested the removal of Remote Office LAN TTI ports.	UID	0

The following example shows an IP denial event report.

```
display events                                                  Page   1  of  1

                                 EVENTS REPORT

Event Event                      Event     Event      First       Last     Evnt
Type  Description                Data 1    Data 2     Occur       Occur     Cnt

1012  Destination Unavailable   71        5A       01/09/09:44 01/09/09:54  8
1012  Destination Unavailable   65        22       01/09/09:45 01/09/09:45  1
1012  Destination Unavailable   6E        2D       01/09/09:46 01/09/09:47  3
1012  Destination Unavailable   1EA       4A       01/09/09:47 01/09/09:51  2
1934  IP RRJ - Ext already reg  6c        8709D26D 01/09/09:47 01/09/09:51  1
1012  Destination Unavailable   8E        32       01/09/09:48 01/09/09:48  1
1643  Off-hook dialing time out 46        58       01/09/09:49 01/09/09:53  2
1012  Destination Unavailable   AE        3A       01/09/09:49 01/09/09:49  1
1012  Destination Unavailable   55        41       01/09/09:50 01/09/09:50  2
1012  Destination Unavailable   222       48       01/09/09:51 01/09/09:51  1
1012  Destination Unavailable   1D4       50       01/09/09:52 01/09/09:52  1
1012  Destination Unavailable   46        5E       01/09/09:52 01/09/09:54  2
1012  Destination Unavailable   412       54       01/09/09:52 01/09/09:52  1
1012  Destination Unavailable   72        57       01/09/09:53 01/09/09:53  1

                press CANCEL to quit --  press NEXT PAGE to continue
```

display failed ip-network-region

The display failed network-region command will provide a list of the worst first 100 network regions with broken connectivity rank ordered by the worst to least worst.

```
display failed-ip-network-region

                             WORST NETWORK REGIONS
                    Network Region:Number of Broken Paths

  2:4        :          :          :          :          :          :          :
   :         :          :          :          :          :          :          :
   :         :          :          :          :          :          :          :
   :         :          :          :          :          :          :          :
   :         :          :          :          :          :          :          :
   :         :          :          :          :          :          :          :
   :         :          :          :          :          :          :          :
   :         :          :          :          :          :          :          :
   :         :          :          :          :          :          :          :
   :         :          :          :          :          :          :          :
   :         :          :          :          :          :          :          :
   :         :          :          :          :          :          :          :
   :         :          :          :


Command:
```

The network regions are ordered from worst to best, for example:

- 5:9 (i.e. Region 5 has 9 broken paths)
- 4:5 (i.e. Region 4 has 5 broken paths)
- 1:2 (i.e. Region 1 has 2 broken paths)

display firmware download

Whenever the processor resets and the system is restarted, whether initiated by a technician command or by system software, information about the recovery is stored. If the reset is escalated, only the reset that successfully completes is recorded. Information about the reset may also be found in the Error Log. When a reset 4 (reboot) occurs, the Error Log is saved on the Mass Storage System.

Records of the last 16 restarts are retained in the initcauses log in chronological order. A power failure results in loss of all records in the initcauses log.

display initcauses

The **display initcauses** command displays a history of recovery steps taken by the system. *This command displays information for restarts of the active processor only.* Each time the system performs some type of recovery (user request or a hardware or software problem), the recovery information is stored. The software error log also contains information pertaining to restarts. If a reset 4 (reboot) occurs, the software error log are also stored on tape. Information in the software error log should be used in conjunction with information in the initcauses log.

The history of the last 16 restarts performed by the system is recorded to the initcauses buffer in chronological order. This buffer fills an entire screen with information if it is completely full. Power failures in the processor complex wipe out the entire initcauses buffer. In duplex systems, both processors have to lose power before the information is lost.

Action/ Object	Qualifier	Qualifier Description	Logins	Defaults	Feature Interactions
display initcauses	***print***	Report sent to printer	init inads craft nms	none	none
	schedule	Command is validated and then a scheduling form displays to schedule execution of the command. The command is then placed in the command queue and is executed at the specified time. The information displayed by the command is sent to the system printer instead of the screen.[1] Examples: **display initcauses** **display initcauses print** **display initcauses schedule**			

1 Refer to the Report Scheduler and System Printer feature specification for more details.

Output

The following example shows the output from the **display initcauses** command.

```
display initcauses

                              INITIALIZATION CAUSES

     Cause                 Action   Escalated    Carrier     Time
 Initialized                 4        no           1B       08/01  1:14
 System Technician Request   i        no           1A       08/01  2:14
 System Technician Request   i        no           1B       08/01  2:18
 Sanity Timer Reset          1        no           1B       08/02  6:03
 Sanity Timer Reset          1        no           1B       08/02  6:08
 Sanity Timer Reset          2        yes          1B       08/02  6:14
 Scheduled Interchange       i        no           1A       08/03  2:33
 Bad Handshake               1        no           1B       08/04  2:34
 Software Request            2        no           1B       08/05  8:22
 System Technician Request   1        no           1B       08/05  8:23
 System Technician Request   4        no           1A       08/05  9:15
 Upgrade Software            2        no           1A       08/05  9:29
 Software Request            i        no           1B       08/06  7:00
 System Technician Request   2        no           1B       08/06  7:09
 Software Request            1        no           1A       08/09  2:34
 No Handshake                1        no           1A       08/09  2:36


 Command successfully completed
```

Field descriptions

`Cause` Reason for the restart:

- **Active Down:** (High or Critical Reliability system only) The Active SPE went into SPE Down mode. The Duplication Interface initiated an SPE-interchange to the Standby SPE. If this initcause triggers an SPE interchange when the Standby is NOT in Maintenance mode, the previous entry in the log may actually represent a restart that occurred on the Standby SPE. See the preceding description of **display initcauses** for a complete explanation. If a High or Critical Reliability system does a PEI with a warm start, the system software often requests a Cold 2 restart to recover properly only minutes after the warm start has occurred.
- **Bad Handshake:** (High or Critical Reliability system only) The Duplication Interface received inconsistent handshakes from the Active SPE. Thus, the Duplication Interface initiated an SPE-interchange to the Standby SPE. If this initcause triggers an SPE interchange when the Standby is NOT in Maintenance mode, the previous entry in the log may actually represent a restart that occurred on the Standby SPE. See the preceding description of **display initcauses** for a complete explanation. If a High or Critical Reliability System does a PEI with a warm start, the system software often requests a COLD 2 restart to recover properly only minutes after the warm start has occurred.
- **Bad Memory:** A defective memory circuit pack generating too many errors caused a restart.
- **System Technician Request:** The restart was performed because of system technician demand. A system technician-requested **reset system 4** command entry should always precede an **upgrade software** command entry.
- **Failed Interchange:** A “hot-start” interchange (system technician-demanded, scheduled, or software-requested) failed because shadowing was disabled.
- **Initialized:** This is always the first entry in the history and is present until more than 15 restarts have been performed. It indicates power-up and also occurs if the Maintenance/Tape Processor is reset during initialization.

- **LMM Request:** A sanity time-out was requested by the LMM firmware. The three processor circuit pack LEDs blink until the sanity timer goes off. The LMM requests a restart like this when it gets into trouble, usually with memory.
- **Maintenance Reset:** The Maintenance/Test Processor or Duplication Interface reset the system. This refers to resets of the SPE by maintenance in SPE Down mode in which maintenance periodically tries to awaken the SPE.
- **No Handshake:** (High or Critical Reliability System only) The Duplication Interface lost handshaking with the active SPE and has requested a SPE-interchange to the Standby SPE. [A defective tape drive may cause the Active SPE to miss handshakes with the Duplication Interface which, in turn, could result in an initialization cause of “No Handshake.” Check the Hardware Error Log for TAPE-related error types and alarms and follow the recommended repair procedures in the TAPE Maintenance documentation.]
  If this initcause triggers an SPE interchange when the Standby is NOT in Maintenance mode, the previous entry in the log may actually represent a restart that occurred on the Standby SPE. See the preceding description of **display initcauses** for a complete explanation. If a High or Critical Reliability System does a PEI with a warm start, the system software often requests a Cold 2 restart to recover properly only minutes after the warm start has occurred.
- **Oryx Request:** A sanity time-out was requested by the Oryx operating system. The three processor circuit pack LEDs blink until the sanity timer goes off. Oryx requests a restart like this when it gets into trouble, usually with software.
- **Sanity Timer Reset:** The sanity timer on the processor timed out and reset the system. This event usually indicates a software fault.
- **Scheduled Interchange:** A scheduled SPE-interchange occurred.
- **Software Request:** Software requested the system restart. In a system equipped with High or Critical Reliability, software can also request SPE-interchanges when it detects problems. See the Software Requested Interchanges Caused by Alarm Conditions table (Table 6-2 on page 6-14) in Chapter 6, ‘‘Reliability Systems: A Maintenance Aid’’. If this initcause triggers an SPE interchange when the Standby is NOT in Maintenance mode, the previous entry in the log may actually represent a restart that occurred on the Standby SPE. See the opening description for a complete explanation.

- **SPE-Select Lead Change:** (High or Critical Reliability system only) The system could not determine why the SPE changed its status from Active or Standby. However, this change usually indicates a transition from Active to Standby. If a High or Critical Reliability System does a PEI with a warm start, the system software often requests a Cold 2 restart to recover properly only minutes after the warm start has occurred.
- **SPE-Select Switch:** (High or Critical Reliability system only) The SPE-Select switches on the Duplication Interface circuit packs were thrown to select the Standby SPE, which became the Active SPE, using the restart level shown. It is also possible to get an initialization cause of SPE-Select Switch when SPE B is active and power to carrier B is lost. In this case, an SPE switch to SPE A occurs and the initialization cause can show either SPE-Select Switch or SPE Down. If this initcause triggers an SPE-interchange when the Standby is NOT in Maintenance mode, the previous entry in the log may actually represent a restart that occurred on the Standby SPE. See the preceding description of "display initcauses" for a complete explanation.
- **Stby-SPE Core Dump:** (High or Critical Reliability system only) The Standby SPE had finished a core dump when an interchange took place that made the Standby SPE the Active SPE. If this initcause triggers an SPE-interchange when the Standby is NOT in Maintenance mode, the previous entry in the log may actually represent a restart that occurred on the Standby SPE. See the preceding description of "display initcauses" for a complete explanation. If a High or Critical Reliability System does a PEI with a warm start, the system software often requests a Cold 2 restart to recover properly only minutes after the warm start has occurred.
- **Stby-SPE Tests:** (High or Critical Reliability system only) The Standby SPE was in the process of running tests at the request of the Active SPE when an interchange occurred. If this initcause triggers an SPE-interchange when the Standby is NOT in Maintenance mode, the previous entry in the log may actually represent a restart that occurred on the Standby SPE. See the preceding description of "display initcauses" for a complete explanation. If a High or Critical Reliability System does a PEI with a warm start, the system software often requests a Cold 2 restart to recover properly only minutes after the warm start has occurred.
- **Unknown:** A restart that could not be classified. The Software Error Log may contain more information about the restart.
- **Upgrade Software:** (High or Critical Reliability system only) This indicates that the system was upgraded to a new software generic using the Standby SPE to load the new software via the **upgrade software** command. A system technician-requested **reset system 4** command should be the previous entry.

- **LMM Put Fail:** This initcause occurs when the LMM has failed to place the request for initcause message in the DPR. This could occur if the MTP does not respond to the DPR handshake. Level of Restart: Warm (escalation turned on).
- **LMM Get Fail:** This initcause occurs when the LMM does not receive a response to the request for initcause message from the MTP. This could occur if the MTP is not taking messages out of the DPR. Level of Restart: Warm (escalation turned on).
- **Dupint Unknown:** This initcause occurs when the LMM receives an UNKNOWN initcause from the Dupint. This could occur in a High or Critical Reliability System where the MTP thinks a PEI has occurred but the dupint disagrees. Level of Restart: Warm (escalation turned on).
- **MTP Reset Unknown:** This initcause occurs when the LMM has reset the MTP during the process of trying to get initcause from the MTP. Level of Restart: Warm (escalation turned on).
- **S-vintage Mismatch:** This initcause occurs when a mismatch in the duplication super vintage is detected by the LMM. Level of Restart: Reboot (no escalation).
- **Monitor Reset:** (For Development Environment Only) This initcause occurs when “ini 1" is executed from the Flash Monitor. This initcause can occur only in systems with SBB. Level of Restart: Reboot (no escalation).
- **Bad GDT:** (For Development Environment Only) This initcause occurs when the LMM fails to transfer control to Oryx/Pecos because of absence of entry in GDT to point at O/P. This usually occurs in a system with no data. Again, this should only occur in systems with SBB.

`Action` The level of recovery performed by the system. The recovery levels are:

Reset system 1 (Warm)
Reset system 2 (Cold-2)
Reset system 3 (Cold-1)
Reset system 4 (Reboot)
Reset system 5 (Extended Reboot)
Reset system interchange (High or Critical Reliability System only - hot restart interchange)

`Escalated` Whether the restart was escalated to a higher level to clear the problem. There is a software escalation strategy that can cause a higher level of restart than the one previously performed to be executed if the need arises.

`Carrier` The “carrier” statement indicates the carrier on which the recovery was performed (possible values are **1A** and **1B**). In most cases, this “carrier” is the Active SPE carrier when the restart occurs. However, it is possible in a High or Critical Reliability System that this carrier was the Standby carrier. See the preceding description of ‘‘display initcauses’’ for a complete explanation.

`Time` The date (month and day) and time of the restart.

display memory-configuration

This command indicates the total memory available for the active, and if present, the standby processor(s). This command is a single page display with hidden fields for the standby-processor, if available.

Action/ Object	Qualifier	Qualifier Description	Logins	Defaults	Feature Interactions
display memory-configuration	***long*** ***print*** ***schedule***	Displays the standby SPE Flash ROM and DRAM configuration. Report sent to printer Command is validated and then a scheduling form displays to schedule execution of the command. The command is then placed in the command queue and is executed at the specified time. The information displayed by the command is sent to the system printer instead of the screen.[1] Examples: **display memory-configuration** **display memory-configuration long**	init inads craft cust browse	none	none

1 Refer to the Report Scheduler and System Printer feature specification for more details.

Output

The following output example is for the **display memory-configuration** command when executed on the G3V9si platform with SPE duplication:

```
display memory-configuration                                          SP_A
                      PROCESSOR MEMORY-CONFIGURATION
                                 (M bytes)

                                SPE_A   SPE_B

               Flash ROM:        32       32

              Total DRAM:        32       32

SIMM A:            16       16
              SIMM B:            16       16
              SIMM C:             0        0

Command successfully completed
```

For the Simplex SPE configuration, the column under “SPE_B” is blank.

display node-names

This command displays a list of the administered node names.

Action/ Object	Qualifier	Qualifier Description	Logins	Defaults	Feature Interactions
display node-names	***print schedule***	Example: **display node-names**	init inads craft	none	none

Output

The following example shows the output from **display node-names**.

Page 1

```
                                                                  page 1 of 6
                                  NODE NAMES

   Audix Name       IP address
1. ________         ___.___.___.___
2. ________         ___.___.___.___
3. ________         ___.___.___.___
4. ________         ___.___.___.___
5. ________         ___.___.___.___
6. ________         ___.___.___.___
7. ________         ___.___.___.___
8. ________         ___.___.___.___
```

Field descriptions (page 1)

`Audix Name`	Identifies the name of the adjunct or switch node. Enter 1-7 characters for audix or msa; 1-20 characters for others. Default is blank.
`IP Address`	IP address for the adjunct or switch. Enter **0** - **255** or leave blank.
`IP Address`	IP address for the adjunct or switch. Enter **0** - **255** or leave blank.

Page 2

```
                                                                  Page 2 of 6
                                  NODE NAMES

 Name                  IP Address            Name                IP Address
 1. Default              0.  0.  0.  0. 17. ________________    ___.___.___.___
 2. ________________    ___.___.___.___  18. ________________    ___.___.___.___
 3. ________________    ___.___.___.___  19. ________________    ___.___.___.___
 4. ________________    ___.___.___.___  20. ________________    ___.___.___.___
 5. ________________    ___.___.___.___  21. ________________    ___.___.___.___
 6. ________________    ___.___.___.___  22. ________________    ___.___.___.___
 7. ________________    ___.___.___.___  23. ________________    ___.___.___.___
 8. ________________    ___.___.___.___  24. ________________    ___.___.___.___
 9. ________________    ___.___.___.___  25. ________________    ___.___.___.___
10. ________________    ___.___.___.___  26. ________________    ___.___.___.___
11. ________________    ___.___.___.___  27. ________________    ___.___.___.___
12. ________________    ___.___.___.___  28. ________________    ___.___.___.___
13. ________________    ___.___.___.___  29. ________________    ___.___.___.___
14. ________________    ___.___.___.___  30. ________________    ___.___.___.___
15. ________________    ___.___.___.___  31. ________________    ___.___.___.___
16. ________________    ___.___.___.___  32. ________________    ___.___.___.___
```

Field descriptions (page 2)

`Name`	Non-specific node name (up to 15 characters each) for CMS nodes, DCS nodes, and so forth. Valid entries are alpha-numeric and/or special characters for identification.
`IP Address`	IP address for the adjunct or switch. Enter **0** - **255** or leave blank.

display port

This command displays the port location, the equipment connected to the port, and the means by which the port can be identified (for example, an extension number, the trunk group and member, and so on).

Action/ Object	Qualifier	Qualifier Description	Logins	Defaults	Feature Interactions
display port	***location***	Port address (**PCSSpp**)	init inads craft cust browse	none	none
	print	Report sent to printer			
	schedule	Command is validated and then a scheduling form displays to schedule execution of the command. The command is then placed in the command queue and is executed at the specified time. The information displayed by the command is sent to the system printer instead of the screen.[1] Examples: **display port 1c0801** **display port 1c0802 print** **display port 2c1504 schedule**			

1 Refer to the Report Scheduler and System Printer feature specification for more details.

Output

The following example shows the output for **display port 1c0801**.

```
display port 1c0801                                SPE A

                      PORT INFORMATION

                        Port: 01C0801
              Equipment Type: Station
              Identification: 1021
```

Field descriptions

`Port:`	Port address (cabinet-carrier-slot-circuit)
`Equipment Type:`	Hardware that is physically connected to the specified port.
`Identification:`	Depends on the hardware that is physically connected to the port:

If hardware is	The field contains
station	station extension
trunk	trunk group and member number
modem pool	modem pool group number

display synchronization

This command calls up the synchronization form where the administered synchronization stratum and reference sources are displayed. (No changes can be made to the system synchronization with this command.)

Action/ Object	Qualifier	Qualifier Description	Logins	Defaults	Feature Interactions
display synchronization	***print schedule***	Report sent to printer Command is validated and then a scheduling form displays to schedule execution of the command. The command is then placed in the command queue and is executed at the specified time. The information displayed by the command is sent to the system printer instead of the screen.[1] Examples: **display synchronization** **display synchronization print** **display synchronization schedule**	init inads craft cust rcust bcms browse	none	See below

1 Refer to the Report Scheduler and System Printer feature specification for more details.

Feature Interactions

A DS1 interface or a UDS1 board that has been selected as either a primary or secondary synchronization source cannot be removed on the DS1 circuit pack administration form or the regular circuit pack administration form.

Output

The following example shows the output for **display synchronization**.

```
display synchronization                        Page  1 of  2

       SYNCHRONIZATION SOURCE (DS1 circuit pack location)

           Stratum: 4
           Primary:      Secondary:

                        DS1 CIRCUIT PACKS

 Location    Name     Slip        Location    Name     Slip
 02B10 D92D1 ds1 2b10   n
 02B11 d92D1 ds1 2b11   n
 01C10 D92D1 ds1 1c10   n
 01C11 D92D1 ds1 1c11   n

 NOTE: TN722B DS1 sources result in stratum 4, type II synchronization
```

Field descriptions

`Stratum:`	Synchronization stratum that is used (3 or 4)
`Primary:`	First choice system synchronization source (blank = no synchronization); valid only if stratum 4 synchronization specified
`Secondary:`	Second choice system synchronization source (blank = no synchronization); valid only if stratum 4 synchronization specified
`Location:`	Circuit pack location (cabinet-carrier-slot) of all administered DS1 circuit packs are listed here.
`Name:`	User-defined name administered for the DS1 circuit pack. Blank means no user-defined name administered.
`Slip:`	If the DS1 circuit pack has slip alarm, field shows `y`; otherwise it shows `n`.
`Port Network:`	Only valid for stratum 3 synchronization; specifies the port network supplying synchronization through the tone clock circuit pack.

display system-parameters duplication

This command displays the status (enabled or disabled) of Switch Processing Element (SPE) and Port Network Connectivity (PNC) duplication. The following must be duplicated:

- Each switch node record and every switch node with its duplicate (cabinet administration is a prerequisite)
- Every fiber link containing either an expansion interface circuit pack as an endpoint, or a DS1-C (fiber link administration is a prerequisite; circuit pack administration then follows duplication administration)

All nonduplicated switch node interfaces (SNI) to SNI fiber links are automatically duplicated.

NOTE:
The PNC Duplication field must be enabled on the customer options form before you can do any duplication administration.

PNC Duplication cannot be enabled until all pnc-a and pnc-b boards are released from the “busyout” state.

Action/ Object	Qualifier	Qualifier Description	Logins	Defaults	Feature Interactions
display system-parameters	duplication	SPE or PNC duplication Examples: **display system-parameters duplication**	init inads craft	none	none

Output

The following example shows the output from **display system-parameters duplication**.

```
                                                          Page 1 of 1
                 DUPLICATION-RELATED SYSTEM PARAMETERS
  Enable Operation of SPE Duplication? y
  Enable Operation of PNC Duplication? y
```

Screen 8-12. Duplication-Related System Parameters form (page 1 of 1)

Field descriptions

`Enable Operation of SPE Duplication?`	Status of SPE duplication: **y** is enabled; **n** is disabled
`Enable Operation of PNC Duplication?`	Status of PNC duplication: **y** is enabled; **n** id disabled. This field appears when `PNC Duplication` is y on the System-Parameters Customer-Options form.

display system-parameters maintenance

This command displays the translation data for maintenance-related system parameters.

Action/ Object	Qualifier	Qualifier Description	Logins	Defaults	Feature Interactions
display system-parameters maintenance	print schedule	Report sent to printer Command is validated, a scheduling form appears to schedule execution of the command. The command is placed in the command queue and executed at the specified time. The information displayed by the command is sent to the system printer instead of the screen.[1] Examples: **display system-parameters maintenance** **display system-parameters maintenance print** **display system-parameters maintenance schedule**	init inads craft super-user Maintain Switch Circuit Packs permissions	none	none

1 Refer to the Report Scheduler and System Printer feature specification for more details.

Output

The following display shows a typical result when **display system-parameters maintenance** is entered.

```
display system-parameters maintenance                          Page   1 of 3
                   MAINTENANCE-RELATED SYSTEM PARAMETERS

OPERATIONS SUPPORT PARAMETERS
            Product Identification: 1000000000
        First OSS Telephone Number: 5551212           Abbrev Alarm Report? y
       Second OSS Telephone Number: 5551213           Abbrev Alarm Report? n
  Alarm Origination to OSS Numbers: both
        Cleared Alarm Notification? y
              Restart Notification? y
           Test Remote Access Port? n
        CPE Alarm Activation Level: none
              Packet Bus Activated? n
     Customer Access to INADS Port? n
       Repeat Dial Interval (mins): 7

SCHEDULED MAINTENANCE
                  Start Time: 22: 00                    Stop Time: 04: 00
           Daily Maintenance: daily              Save Translation: daily
 Control Channel Interchange: no        System Clocks Interchange: no
             SPE Interchange: no             EXP-LINK Interchange: no
```

```
   display system-parameters maintenance           Page 2 of 3

           MAINTENANCE-RELATED SYSTEM PARAMETERS

 MAINTENANCE THRESHOLDS ( Before Notification )
   Minimum Threshold for TTRs: 4    Minimum Threshold for CPTRs: 1
   Minimum Threshold for Call Classifier Ports: _

 TERMINATING TRUNK TRANSMISSION TEST (Extension)
   Test Type 100:        Test Type 102:         Test Type 105:

 ISDN MAINTENANCE
    ISDN-PRI TEST CALL Extension: _____   ISDN BRI Service SPID: _____

 DS1 MAINTENANCE
    DSO Loop-Around Test Call Extension: 1001

SPE OPTIONAL BOARDS
  Disk? y   Packet Intf1? y   Packet Intf2? n     Packet Intf3? n
```

```
display system-parameters maintenance           Page 3 of 3

           MAINTENANCE-RELATED SYSTEM PARAMETERS

        Modem Connection: external
               Data Bits: 8
                  Parity: none

              Modem Name:

         RTS/CTS Enabled: \Q3      Auto Answer Ring Count (rings):
S0=10
  Asynchronous Data Mode: &M0&Q0                        Dial
Type: T
     DTE Auto-Data Speed:             Adjustable Make/Break
Ratio:
Disable Data Compression:                             Dial
Command: D
    Enable Error Control:                      No Answer
```

Field descriptions

Defaults for data entry fields are listed in parentheses.

Product Identification	10-digit number (starting with 1) that identifies the switch to an Operations Support System (OSS), for example, INADS.
First OSS Telephone Number	First telephone number that the switch dials to report alarms; must be obtained from the National Customer Support Center (NCSC) or the TSC. # and ***** are not allowed
Abbrev Alarm Report	Enables the Abbreviated Alarm Report feature for the first OSS. (y)
Second OSS Telephone Number	Second telephone number that the switch dials to report alarms; must be obtained from the National Customer Support Center (NCSC) or the TSC. # and ***** are not allowed
Abbrev Alarm Report	Enables Abbreviated Alarm Report for the second OSS. (n)

`Alarm Origination to OSS Numbers`

One of four options for alarm origination (neither):

- If `both`, all Major and Minor alarms result in an automatic call to both OSS telephone numbers. Both OSS telephone numbers must be administered.
- If `first-only`, all Major and Minor alarms result in an automatic call to the first OSS number only. The switch does not call the second OSS telephone number even if the number is administered. The first OSS telephone number must be administered
- If `neither`, alarm origination does not take place. Warning alarms are not reported to either numbers.
- If `second-as-backup`, all Major and Minor alarms result in an automatic call to the first OSS telephone number. If calling the first OSS telephone number fails four attempts, the switch starts to call the second OSS telephone number as a backup until calling the first OSS telephone number becomes successful. Both OSS telephone numbers must be administered.

Before Release 5, the name of this field is `Alarm Origination Activated`. If Alarm Origination is deactivated, both Cleared Alarm Notification and Restart Notification are disabled, even though they may still be activated in the administration.

`Cleared Alarm Notification`

Enables the switch to originate a call to the OSS and send an alarm resolution message whenever all previously-reported Major and Minor alarms are resolved. Alarm Origination must be activated in order for Cleared Alarm Notification to work. (n)

`Restart Notification`

Enables the switch to originate a call to the OSS and report any system restarts caused by problems with the switch.

`Suspension Threshold`

The threshold for suspending Cleared Alarm Notification (1-15). Some problems may cause alarms to be generated and then resolved repeatedly. To detect these problems (by not sending additional Cleared Alarm notifications to indicate a problem- free system), the switch suspends Cleared Alarm Notification when it has reported this administrable number of Cleared Alarm notifications in a 24-hour period. A suspended Cleared Alarm Notification is only enabled again with a successfully completed “logoff” command, a system reset, or when the threshold is changed. This field is irrelevant if Cleared Alarm Notification or Alarm Origination is disabled.

`Test Remote Access Port`

Specifies whether testing of the remote access port on the SYSAM circuit pack is enabled. This field should read `yes` whenever there is an INADS line connected to the switch and there is a maintenance contract in effect so that alarm origination capability is maintained.

`CPE Alarm Activation Level`

Indicates the minimum level (Major, Minor or Warning) at which the Customer-Provided Equipment (CPE) alarm is activated. If the level is `none`, the CPE does is not activated for any alarm. (none)

NOTE:
The CPE alarm is always activated when the switch goes into Emergency Transfer, regardless of the CPE Alarm Activation Level setting.

`Packet Bus Activated`

Enables the system Packet Bus.

If this field reads `yes`, then maintenance software assumes that there is a Packet Control circuit pack installed in the system. The packet endpoints (for example, ASAI, and/or BRI) may be administered, and maintenance testing runs on both the Packet Control circuit pack and on the Packet Bus (This field should read `yes` after a packet control circuit pack is installed.). If a Packet Control circuit pack is not installed in the system, then a major alarm is raised against the PKT-CTRL MO.

This field can only be changed from `yes` to `no` if there are no packet endpoints administered, thus ensuring that there can be no packet endpoints administered if the packet bus is not activated.

This field should be set to **yes** after a Packet Control circuit pack is installed.

If a Packet Control circuit pack is not installed, then this field should be set to “no" (the only exception is when setting up translations for a system for which not all of the required hardware is available). (n)

`Customer Access to INADS Port`

Provides the capability to prohibit access to system administration and maintenance interface, via the INADS port when using customer login ID’s. This field can only be activated by Avaya services through system-parameters maintenance administration. (n)

`Repeat Dial Interval (MMS)`

Indicates the number of minutes that the system must wait before attempting another call origination to an OSS. This timer is triggered by the lack of a far-end acknowledgment. (7)

Scheduled Maintenance

A series of maintenance tests and operations runs automatically every day according to the schedule and settings specified in the following fields.

`Start Time`	The hour and minute (24-hour notation) at which daily scheduled maintenance begins. (22:00)
`Stop Time`	Time (hour and minute) when scheduled daily maintenance stops. If any daily maintenance operations are not completed by this time, the system notes where in the sequence it stopped and performs those operations during the next scheduled daily maintenance.
`Daily Maintenance`	The series of tests that are always run by maintenance software as part of daily maintenance. (display-only field)
`Save Translation`	This field indicates on which days translation data in memory is automatically saved to the flash card, MSS disk, and/or tape devices during scheduled maintenance. On systems with duplicated SPEs, translation data is saved on both SPEs. Valid entries are **daily**, days of the week, or **no**. “No” specifies that no automatic saves are to be executed. (daily)
`Control Channel Interchange`	Each port network has a pair of TDM busses called A and B, each of which has a set of time slots dedicated to use by the control channel. At any one time, the control channel in each PN is carried on only one of the two busses. This field indicates on which days the control channel in each port network will be switched from one of the paired TDM busses to the other. Valid entries are **daily**, days of the week, or **no**. “No” specifies that no interchange be executed. (n)
`System Clocks Interchange`	On High and Critical Reliability systems, this option causes a Tone-Clock interchange in each port network with duplicated Tone-Clock circuit packs. Each port network interchanges into the standby Tone-Clock for 20 seconds and then back to the Tone-Clock that was originally active. This field indicates on which days the interchanges are to take place. Valid entries are **daily**, days of the week, or **no**. “No” specifies that interchanges be executed. (n)
`SPE Interchange`	On systems with duplicated SPEs, this field indicates on which days an SPE interchange will be executed during scheduled maintenance. Valid entries are **daily**, days of the week, or **no**. “No” specifies no scheduled interchanges. (n)
`EXP-LINK Interchange`	This field indicates whether or not the expansion links between port-networks are interchanged as part of scheduled maintenance. The value “daily'' means that EXP-LINK interchange occurs automatically everyday. The value “no'' means that EXP-LINK interchange is not done automatically as part of scheduled maintenance. Values represented by the days of the week mean that EXP-LINK interchange occurs automatically on the specified day only. Since EXP-LINK interchange only applies to duplicated systems, simplex systems do not display this field. (n)

`Minimum Threshold for TTRs`	When the number of touch tone receivers (TTRs) in service falls below this number (4 to 200), a WARNING alarm is raised against TTR-LEV. These are also known as dual-tone multifrequency receivers (DTMRs). There are 4 TTRs on each TN748, TN718, TN420, or TN756; TN2182 and TN744 (suffix C or later) each have 8 TTRs. To alarm the first occurrence of a TTR being taken out of service, set this field to the total number of TTRs in the switch.
`Minimum Threshold for CPTRs`	When the number of call progress tone receivers in service falls below this number (2 to 100), a WARNING alarm is raised against TTR-LEV. These are also known as general purpose tone detectors (GPTDs). There are 2 CPTRs on each TN748, TN718, TN420, or TN756; TN2182 and TN744 (suffix C or later) each have 8 CPTRs. To alarm the first occurrence of a CPTR being taken out of service, set this field to the total number of CPTRs in the switch.
`Minimum Threshold for Call Classifier Ports`	When the number of call classifier ports (CLSFY-PTs) in service falls below this number, a WARNING alarm is raised against TTR-LEV. Valid entries are 1 to 200. There are 8 ports on each TN744 or TN2182 circuit pack. To alarm the first occurrence of a CLSFY-PT being taken out of service, set this field to the total number of CLSFY-PTs. If there are no TN744 or TN2182 circuit packs in the system, leave this field blank.
`Test Type 100, Test Type 102, Test Type 105`	An extension assigned to receive tie-trunk calls from other switches with test line origination capability. The system responds by sending a sequence of test tones. Test Type 100 tests far-end to near-end loss and C-message by sending: ■ 5.5 seconds of 1004 Hz tone at 0dB ■ Quiet until disconnect; disconnect is forced after one minute
`ISDN-PRI Test Call Extension`	The extension used by a far-end ISDN node to place a call to the system to test the ISDN-PRI trunks between the far-end and the system.
`ISDN-BRI Service SPID`	This field shows whether or not the link is associated with the Service SPID. If the link is associated with the Service SPID, this field contains a “yes” and the extension field is blank; otherwise, this field is blank. Service SPID is a feature used by the system technician to check building wiring between the switch and the BRI endpoint.

`DSO Loop-Around Test Call Extension`

Extension number for the test call. This test extension number is used to establish a loop-around connection on the selected trunk.

The DSO Loop-Around Test Call feature is used primarily for testing DSO channels associated with non-ISDN-PRI trunks. The loop-around is activated by dialing the test extension number. Multiple DSO Loop-Around connections can be set up by placing multiple calls to the loop-around extension.

The DS0 Loop Around feature provides a loop around connection for incoming non-ISDN DS1 trunk data calls. This feature is similar to the far-end loop around connection provided for the ISDN Test Call feature. This DS0 loop around is provided primarily to allow a network service provider to perform facility testing at the DS0 level before video teleconferencing terminals are installed at the PBX.

The feature is activated on a call-by-call basis by dialing a test call extension specified on the second page of the System Parameters Maintenance form. No special hardware is required. When the test call extension is received by the PBX, a non-inverting, 64 kbps connection is set up on the PBX's Time Division Multiplexed bus. More than one loop around call can be active at the same time.

For calls routed over the public network using the ACCUNET Switched Digital Service (SDS) or Software Defined Data Network (SDDN), the data transmission rate is 56 Kbps, since robbed bit signaling is used. For calls established over a private network using common channel signaling, the full 64 kbps data rate is available.

When the incoming trunk group is used only for data calls (SDS), the Communications Type on the associated Trunk Group form should be set to "data." When the incoming trunk group is used for robbed bit alternate voice and/or data (SDN/SDDN), the Communications Type on the Trunk Group form should be set to "rbavd" (robbed bit alternate voice data). For private network trunks using common channel signaling, the Communications Type on the associated Trunk Group form can be set to "avd."

`SPE Optional Boards`	These fields indicate whether a Disk circuit pack is present in the system, and which Packet Interface slots are administered. If a Packet Interface circuit pack is physically present, the Packet Interface field is **y** when the system boots, and no change to that field is allowed. If the system is equipped with duplicated SPEs, a Packet Interface field is **y** when either SPE carrier contains a Packet Interface circuit pack in the corresponding position. If a Packet Interface circuit pack is not present, the Packet Interface field value is read from translation data stored on disk or tape. If the field is **n**, change the corresponding Packet Interface field to **y** to administer the Packet Interface circuit pack.

Modem Connection

On page 3 of the example forms shown below, there are 11 fields that are hidden when the `Modem Connection?` field is set to **internal**. In this example the `Modem Connection` field is set to **external** and these additional 11 fields are visible.

The first 2 fields on page 3 help setup the data format for the serial data from the switch to the modem.These fields are display-only, and they must contain the following values:

- Data Bits = 8, Parity = None

The remaining fields are listed below:

`Modem Connection`	Valid entries for this field are “internal” or “external”. The default is set to internal. (internal)
`Modem Name`	This field is 20 characters long and will permit alpha-numeric characters to provide a unique qualifier for a given modem. ()
`RTS/CTS Enabled`	This field will inform the modem that communication with the data source UART will be driven with RTS/CTS flow control. This field is 6 characters long and is case in-sensitive. (\Q3)
`Asynchronous Data Mode`	This field will configure the modem as an asynchronous communications device. This field is 8 characters long and is case in-sensitive. (&M0&Q0)

`DTE Auto-Data Speed`

This option will adjust the speed of the data source (DTE) UART to the outgoing (modem-to-modem) data rate. So, at maximum this speed would be 9600 baud. This field is 6 characters long and is case in-sensitive.

Note that this field sets the link speed between the switch and the modem. It does not set the speed of the modem. It is not desirable to have the serial data fill the modem buffer faster than the outgoing data rate especially because data compression is disabled. ()

`Disable Data Compression`

This field will turn off the default data compression algorithms that are in use by most consumer modems. This field is 6 characters long and is case in-sensitive. ()

`Enable Error Control`

This field will turn on the V.42 LAPM and MNP error control protocols, if available on the modem. This field is 6 characters long and is case in-sensitive.

This V.42/MNP/Buffer mode first attempts to negotiate V.42 error control with the remote modem. If this fails, then the modem transitions to MNP, and if this fails then no error control is used. ()

`Misc. Init. Param`

This field supports any initialization parameters that are not already specified. The AT commands specified in this free-form field will be always the last initialization parameters to be sent to the external modem. This field is 20 characters long and is case in-sensitive. ()

`Auto-Answer Ring Count`

This field controls the number of rings required before the modem automatically answers an incoming call, if and only if the switch doesn't answer first. (If the switch is healthy, it answers an incoming within the first few rings.) This field is 6 characters long and is case insensitive. Typically, the maximum permissible value for this register is 255. The values 1-255 denote the number of incoming ring cycles. (S0=10)

NOTE:
The number of rings is optimally set above 5, and if at all possible, keep the default of S0=10.

`Dial Type`

This field controls the type of inter-register signaling to be used between the modem and the Central Office. Use "T" for tone dialing and "P" for pulse dialing. The field length is be 3 characters long and is case in-sensitive. This field will be concatenated with the dial string. (T)

`Adjustable Make/Break Ratio`	This field can be of particular importance when using a modem that may be transferable from country to country. The intent of this field is to control the make/break ratios of pulses and DTMF dialing. The Intel product information has support for the different make/break options for pulse dialing only. Intel uses the option “&P0” to select a ratio of 39% make and 61% break for communication within the U.S. and Canada. The option “&P1” sets a ration of 33% make and 67% break for the U.K. and Hong Kong. This field is 5 characters long and is case in-sensitive. ()
`Dial Command`	This field simply denotes the dialing command of the modem. This is a fairly standard command. (D)
`No Answer Time-Out`	Most off-the-shelf external modems provide a timer that abandons any outbound data call after a predetermined interval. Some modems provide for this timer to be disabled, thus allowing an outbound call to ring indefinitely. AT&T Paradyne does not provide this capability with their modem line, because it is generally undesirable to have an outbound call attempt ring indefinitely. The internal modem must have this parameter disabled or set to at least 255 seconds. This is a non-administrable parameter. For the external modem connection, this parameter will be the first initialization string to be transmitted to the external modem. This field will be visible on the administration form in display mode only. This hardcoded constant can be overridden for type approval applications, specifically in the U.K and other Western European nations, by the use of the “Misc. Init. Param:” field. (S7=255)

display test-schedule

Automatic Transmission Measurement System (ATMS) provides advanced maintenance procedures for monitoring system trunk facilities. This system performs transmission tests on system trunks to determine if trunks are performing satisfactorily. These tests can be initiated in two ways:

demand	user enters command at the System Administration Terminal (SAT) to initiate a test immediately
scheduled	schedules tests through a schedule form to automatically initiate tests at a predetermined time

Output

The following is the output from the **display test-schedule *n*** command.

```
                                                                  Page 1 of 1
                              ATMS TRUNK TEST SCHEDULE
  Schedule No: __
Schedule Time: __:__             Schedule Test Days            Interval: __
Schedule Date: __/__/__      SU: _  TU: _  TH: _  SA: _       Duration: __
 OTL Throttle: _             MO: _  WE: _  FR: _            Test Type: ______
Trk Bgn End     Trk Bgn End     Trk Bgn End     Trk Bgn End     Trk Bgn End
Grp Mem Mem     Grp Mem Mem     Grp Mem Mem     Grp Mem Mem     Grp Mem Mem

___ ___ ___     ___ ___ ___     ___ ___ ___     ___ ___ ___     ___ ___ ___
___ ___ ___     ___ ___ ___     ___ ___ ___     ___ ___ ___     ___ ___ ___
___ ___ ___     ___ ___ ___     ___ ___ ___     ___ ___ ___     ___ ___ ___
___ ___ ___     ___ ___ ___     ___ ___ ___     ___ ___ ___     ___ ___ ___
___ ___ ___     ___ ___ ___     ___ ___ ___     ___ ___ ___     ___ ___ ___
___ ___ ___     ___ ___ ___     ___ ___ ___     ___ ___ ___     ___ ___ ___
___ ___ ___     ___ ___ ___     ___ ___ ___     ___ ___ ___     ___ ___ ___
___ ___ ___     ___ ___ ___     ___ ___ ___     ___ ___ ___     ___ ___ ___
___ ___ ___     ___ ___ ___     ___ ___ ___     ___ ___ ___     ___ ___ ___
___ ___ ___     ___ ___ ___     ___ ___ ___     ___ ___ ___     ___ ___ ___
___ ___ ___     ___ ___ ___     ___ ___ ___     ___ ___ ___     ___ ___ ___
```

Field descriptions

Schedule	The current schedule number.
Schedule Time	The hour and minute that the test begins (24-hour time, with “00:00” being midnight). This time must be greater than the current time.
Schedule Date	Month (**1** to **12**), day (**1** to **31**), and year on which testing begins (default is the system date). Must be equal to or greater than the current date.
Schedule Test Days	A **y** next to the days of the week indicates the days of the week this test runs.
Interval	The length of this schedule in weeks. If this field is **0**, the schedule runs on the specified days only once.
OTL Throttle	The number of concurrent tests run within a schedule. This guarantees that all trunk members within a schedule are tested serially or if multiple trunk members are tested from the same schedule.

`Test Type` One of the following types of test to be performed on the trunk group/members in this schedule:

- **full** runs the most comprehensive test and collects all associated measurements for each TTL type.
- **supv** performs a supervision test and only confirms the presence of the test set at the far end. No measurements are taken for this test.
- **no-st** runs the “full” test, but skips any self-test sequences. This saves about 20 seconds on the type 105 test and does not have any effect on type 100 or 102 tests.
- **no-rl** runs the “full” test, but skips any return loss sequences. This saves about 20 seconds on the type 105 test and does not have any effect on type 100 or 102 tests.
- **no-st/rl** runs the “full” test, but skips all self-test and return loss sequences. This saves about 40 seconds on the type 105 test and does not have any effect on type 100 or 102 tests.

`Duration` The maximum number of hours (**1** to **24**) a schedule can remain active. Schedules continue to run until all trunk group/members for that particular schedule are tested or until the schedule duration is reached. If the duration is reached before all trunk groups/members can be tested, the schedule stops.

`Trk Trp` The trunk group numbers to be tested when this schedule runs. There is no limit to the number of times that a trunk group can appear on any particular schedule, or to the number of different schedules in which a trunk group can appear. Default is blank.

`Bgn Mbr` The beginning member number of the trunk group to be tested; default is **1**.

`End Mbr` The ending member number of the trunk group to be tested. This value must be greater than or equal to the value of the beginning member field.

display time

Use **display time** to see but not change the system time on the time form.

Action/ Object	Qualifier	Qualifier Description	Logins	Defaults	Feature Interactions
display time	***print***	Report sent to printer	init inads craft cust browse	none	Date and time are generally used by the switch.
	schedule	Schedules the command. The information displayed by the command is sent to the system printer instead of the screen.[1] Examples: **display time** **display time print** **display time schedule**			

1 Refer to the Report Scheduler and System Printer feature specification for more details.

Output

The following example shows the output for the **display time** command.

```
 display time
                                DATE AND TIME
DATE
       Day of the Week:  Sunday       Month: January
       Day of the Month: 1            Year:  1990

    TIME
                  Hour: 6          Second: 20
                Minute: 8
```

Field descriptions

`Day of the Week`	The day of the week that the system has stored.
`Day of the Month`	The numerical day of the month.
`Month`	The month of the year stored by the system.
`Year`	The current year stored by the system.
`Hour`	The hour of the current day.
`Minute`	The number of minutes into the hour.
`Second`	The number of seconds into the minute stored by the system.

download update-file

The update file is transferred to the switch asynchronously from either an INADS host or a personal computer (PC) using the XMODEM protocol.

Remote download

Remote users can dial into the switch by either using the “call” command (from an INADS host) or by dialing the switch directly with a modem. Once the connection has been established, the user logs into the switch as a remote system access terminal (SAT) using the inads login.

NOTE:
Only the INADS and INIT logins have the necessary permission to send an update file to the switch.

1. Type the **download update-file** command and press `ENTER`. `Please wait...` displays on the screen.

   After completing some initialization, `Please start file transmission now...` displays.

2. Start an XMODEM session on the remote end and send the update file.

   a. INADS host: enter **~dload <*file_name*>** to start the file transmission.

   b. PC: follow the instructions in the emulator’s manual for invoking an XMODEM session to send the update file.

Each block is written to tape or flash card as it is received by the switch. The link level of XMODEM provide error detection and retransmission. Additional protection is provided within the application level. After the entire file has been written to tape or flash card, it is read back and each update file block is validated, and the file checksum is also checked. If the file appears to be sound, the status word in the header block is changed to indicate that it is a valid update file.

There may be a delay (up to 5 minutes on a duplex system) between the end of the file transmission and command completion. This delay is caused by the patch application of any immediate sub-patches and, if on a duplex system, the automatic copy of the update file to the standby SPE, which takes place after receiving a valid update file.

In a High or Critical Reliability System, the connection to the INADS host computer can be dropped by the INADS side, but the process of copying the patch file to the standby processor continues. The standby is placed in maintenance mode and a call placed between active and standby SPE over the data channels. The file is transmitted in the same way for both tape and flash card systems. The same checks are made on the receiving side as were made during and after the original download. If no errors are found, the file is marked valid.

There is no feedback to the user on the status of the standby copy. If an error is encountered during the copy or validation process on the standby, an error is logged in the software error log. Because the data consistency audit discovers that the two patch files are inconsistent, the user must manually copy the valid file on the active processor over to the standby processor.

The software does not indicate when the copy has completed, so scripts run by the TSC must not issue an immediate reset on High or Critical Reliability Systems. This interrupts the copy and guarantees that the field update files on the two processors are inconsistent. This problem can be avoided by using one of the following techniques:

- Use two scripts: the first to apply the patch and a second (run later) to issue the reset that applies the patch. This requires two calls to each duplicated switch.
- Put a delay into the scripts, causing the scripts to wait a period of time after downloading the file and before issuing the reset. This requires only one call, but the amount of delay time required is not well defined, as it varies by system load.
- Use a manual means of detecting when the copy has completed: either a “PASS” on the data consistency audit or a match on the List Configuration Software form. This requires only one call and introduces less delay in requesting the reset.

Action/ Object	Qualifier	Description	Logins	Defaults	Feature Interactions
download update-file			init inads	none	See below

Feature Interactions

- The form displayed for the list configuration software-vintage command has been modified to reflect the changes imposed by the flash architecture. The **list configuration software** command allows INADS to determine with one query the hardware configuration, software vintage, and patch identifier.
- There is no interaction with routine periodic or scheduled maintenance, because patches are only applied on restarts before the system is in normal operation.

- The flash checksum test acts as a backup check to ensure that the entire field update file was applied correctly. It can fail because of a bad checksum update from a poorly constructed update file or because the patching operation has aborted. When the flash Checksum Test fails, a MAJOR on-board alarm is raised on the processor/memory circuit pack. Maintenance runs a data consistency test on a daily basis to check that copies of translations, announcements and software files are consistent across both processors in a High or Critical Reliability System. If the test detects a difference, a minor, off-board alarm is generated.
- When checking the software, the test compares the memory resident software version and patch identifier. It also checks for the presence of a field update file and, if found, compares the old and new patch identifiers to make sure the same patch file id loaded on each processor. If the software or update files are inconsistent, the **list configuration software** command can be used to display the status of the patch file.

Recovery procedures

In the event of a failure encountered during the download and application of the update file, follow the recommended recovery procedures. The instructions apply to both simplex and duplex switches; additional detail is given when needed.

Error on the download transmission

If the error displayed on the terminal indicates that the download step in the process failed, there are several culprits:

1. The transmission line could have been noisy. Retry after making all the following checks. Failed attempts take up room in the hard patch file and may require a warm start to clear the file.
2. The user may have downloaded the tape/MIPS version of the patch instead of the flash version.
3. The vintage of the update file may not match the vintage of software currently running in the system. Check the customer's vintage using **list configuration software** and patch vintage provided in the documentation.
4. The switch may have had difficulty in writing to the hard patch file. Check the hardware error log for processor/memory board failures.
5. The hard patch file may be full. Issue a **reset system 1**. This should cause valid files to be applied and invalid ones to be erased.

Error on Application of the Patch

A patch may not have been applied for the following reasons:

1. The memory card is write-protected. Remove this protection and issue a **reset system x** command.
2. The patch identifiers are inconsistent. Run **list configuration software** and compare the old patch identifier with the values in the update file.
3. The LMM encountered a problem with the patch file. This is unlikely because the same checks (and more) were performed when the file was downloaded, prior to marking the file valid. This implies that the memory that stored the update file was corrupted.
   a. Apply the back out file immediately to back out the changes.
   b. Run the flash checksum test to make sure the system is back to its prepatch state.
   c. Check the validity of the file again.
   d. Try redownloading and applying the patch immediately.
4. The LMM reports a hard error. Symptoms of this are an entry in the hardware error log for the processor/memory board (if you're lucky), or extremely odd switch behavior followed by SPE down mode (if you're not). The problem is that the LMM cannot complete the programming of memory with the result that memory is in a corrupted state. The only recovery is to get or order new software and processor/ memory circuit packs.

   In a High or Critical Reliability System, the failure causes a interchange to the standby processor. The hardware on the standby must be repaired and the patch redownloaded. (There was nothing wrong with the patch.)

Good application - bad patch

This error is not caused by a failure in the download or application, but by a fault in the patch file itself. To recover from this type of problem, the back out file that backs out the patch should be downloaded and applied. This requires that the system be sane enough to receive the file correctly and be able to apply it.

In a High or Critical Reliability System, the user has approximately 8 minutes to recognize that a problem exists and force an interchange to the standby processor. If this can be done, the file on the newly-active processor can be invalidated using a file containing a destroy tuple or the *wp byte* command. The standby processor can be restored to a normal state using the back out file.

Inconsistent software versions on a duplicated switch

As indicated by a failure in the data consistency test, inconsistent software can be caused by problems in copying the update file to the standby or validation test failures on the standby. Unlike the tape or MIPS systems which revert to the same version of software as a result of a refresh, a flash system remains inconsistent until some manual intervention occurs:

1. Use the **list config software** command to determine the status of the vintages, patch identifiers, and patch file data on both the active and standby processors.
2. If one processor looks as if it has been patched (updated patch identifier and no update file) and the other looks as if the patch file is still present (no patch identifier and valid update file), the application of the patch can be forced by making that processor active and requesting the system restart indicated in the accompanying documentation.
3. If one processor has a copy of the update file and the other doesn't (neither has been patched), the file can be copied using the **copy update-file** command.
4. If patch identifiers disagree but neither side has a valid update file, the missing patch should be redownloaded to the system. During the download process, the file should pass the vintage test and then be copied to the standby processor. Validation tests are then be run on both processors. The patch is applied to memory on the next restart. This procedure is less disruptive to the customer if the unpatched processor is the standby at the time of the restart.

enable administered-connection

This command restarts scheduled and periodic maintenance for a single or all administered connections and can be used to track the maintenance processing of administered connections without interference from other maintenance processing. This command also restarts the processing of in-line errors for all or the selected administered connection.

Action/ Object	Qualifier	Qualifier Description	Logins	Defaults	Feature Interactions
enable administered-connection	***ac number***	The number of the administered connection	init inads craft cust rcust mis	none	none
	all	All administered connections are enabled.			
		Examples: **enable administered-connection 128** **enable administered-connection all**			

enable filesystem board

enable filesystem board ppcss <size[actual size]> <login [ID]>

This command requests the board ppcss to create a filesystem of <size> KB. If the optional size parameter is not given, the maximum available is used. If more than 32K is not available an error message is given.

This command fails if the filesystem is already enabled.

Parameters

size — The size of memory allocated is 1KB to 1024 KB. An error message, not enough memory available on source board, is displayed on the SAT if the source board cannot create a filesystem of the specified size.

enable mst

Enables the message trace that is controlled according to the parameters created with the **change mst** command. If executed while the trace is enabled, the command has no effect and returns a screen message indicating that the command was successful.

Action/Object	Qualifier	Qualifier Description	Logins	Defaults	Feature Interactions
enable mst			init inads	none	none

enable suspend-alm-orig

This command enables Suspend Alarm Origination for a board (including all ports and endpoints on the board) or for a port (including all endpoints on the port) for both on- and off-board alarms or for off-board alarms only. Many control circuit packs do not have a board location, so this command cannot support all circuit packs. Each enable command becomes a new entry or replaces an existing entry in the Suspend Alarm Origination table. A new entry that matches both the physical location and off-only, on-, and off-board specifications of an active entry replaces the active entry in the Suspend Alarm Origination table.

This command may be particularly useful for:

- Improved control over customer requests. For example, to suspend off-board DS1 alarms temporarily for customers who periodically disconnect DS1 trunks for testing or other business-related purposes.
- Improved control over external (non-Avaya) problems such as suspending off-board DS1 alarms before a customer resolves facility problems (for example, a T1 trunk that has developed an off-board condition).
- Improved control over internal (Avaya) problems that cannot be resolved immediately. For example, the command can be used to suspend Alarm Origination for a bad circuit pack detected late Friday night when dispatch personnel cannot respond until Monday.

NOTE:
Also see other Suspend Alarm Origination related commands, including **disable suspend-alm-orig** and **list suspend-alm-orig**.

Action/ Object	Qualifiers	Qualifier Description	Logins	Defaults	Feature Interactions
enable suspend-alm- orig	**board/port location** ***off-board-only*** ***expires-in-hrs***	Physical location of the hardware optional; if not specified, both on-and off-board alarms suspended No. of hours (1-72) Examples: **enable suspend-alm-orig 1B03 expires-in-hrs 3** **enable suspend-alm-orig 1B0701 expires-in-hrs 72** **enable suspend-alm-orig 1B07 off-board-only expires-in-hrs 24**	init inads craft cust rcust	Both on- and off-board alarms if the **off-board-only** keyword is not specified	none

enable synchronization-switch

This command re-enables automatic clock switching or returns the maintenance subsystem back to the normal state. The synchronization subsystem consists of the TDM bus clock, DS1 trunk board, and SPE-resident maintenance and administration software and provides error free digital communication between the switch and other PBXs, COs, or customer-premise equipment (CPE).

Action/Object	Qualifier	Qualifier Description	Logins	Defaults	Feature Interactions
enable synchronization-switch			init inads craft	none	none

enable test-number

This command enables a previously disabled test number. At the next request by maintenance or the technician, this test number runs.

Action/ Object	Qualifier	Qualifier Description	Logins	Defaults	Feature Interactions
enable test-number	***number***	The test number to re-enable Example: **enable test-number 102**	init inads craft	none	**display disabled-tests** gives a list of all disabled tests.

get boot-image

Use this command to view the two firmware image parameters on the TN2501AP circuit pack.

Action/ Object	Qualifier	Qualifier Description	Logins	Defaults	Feature Interactions
get boot-image	***location***	The physical location of the circuit pack (UUCSS). Example **get boot-image 1C07**	init inads craft customer		

```
get boot-image 1C07

                           DISPLAY FIRMWARE IMAGE(S)

              Image 1        Image 2

  Board Type: TN2501         TN2501
  FW Vintage: 02             02
HW Signature: 02             02
      Suffix: A              A
        Date: 03/02/02       03/02/01
   Timestamp: 10:30:50       12:42:18
CRC Checksum: Good           Good
Active Image: Yes            No
Reboot Image: Yes            No
```

Screen 8-13. Display Firmware Image(s) screen

Field descriptions

Board Type	For VAL, this field is TN2501.
FW Vintage	The firmware vintage number
HW Signature	The hardware signature number
Suffix	The circuit pack suffix code letter
Date	The date the firmware file was created or transferred to the circuit pack
Timestamp	The time that the firmware file was created or transferred to the circuit pack
CRC Checksum	Cyclic Redundancy Check (data integrity algorithm)
Active Image	Yes in this field indicates the active firmware image file. No in this field indicates the inactive firmware image file. To change the active image file, use the set boot-image command.
Reboot Image	Yes in this field indicates that this image becomes active after a system reset. No in this field indicates that this image becomes inactive after a system reset.

get ethernet options

Use this command to generate a report about a specific ethernet connection.

Action/ Object	Qualifier	Qualifier Description	Logins	Defaults	Feature Interactions
get ethernet-options	***location***	The physical location of the circuit pack (UUCSS)	init inads craft customer		

```
display ethernet-options 1C07

                    Administered Value         Actual Value

Auto Negotiation: Yes                        Yes
           Speed: N/A                        10Mbps
          Duplex: N/A                        Full
  Link Integrity:                            Active
```

Screen 8-14. get ethernet-options screen

Field descriptions

Auto Negotiation	Yes means that the system automatically negotiates the highest possible network speed. No means that the Speed and Duplex fields are manually assigned.
Speed	10Mbps 100Mbps N/A (not available)
Duplex	Half Full N/A (not available)
Link Integrity	Active Inactive

get vector

This command displays the conditions and the Switch Processing Element (SPE) associated with a core dump of memory to tape or memory card. The dump occurs on the tape or disk of the previously active SPE or the SPE previously specified using the **set vector** command in systems with duplicated SPEs.

CAUTION:
The vector is cleared when a system restart of the proper level is performed regardless of whether the core is actually dumped.

Action/ Object	Qualifier	Qualifier Description	Logins	Defaults	Feature Interactions
get vector	***long*** ***print***	Core dump timestamps printed; if SPEs are duplicated, timestamps are printed for both SPEs. Report sent to printer. Examples: **get vector** **get vector print** **get vector long** **get vector long print**	init inads craft	none	none

Output

```
get vector

                         GET RESULTS

  Core Dump Vector           Set Vector Command Option
      0                      spe-active

  Core Dump Time
  SPE_A
  SPE_B
```

Field descriptions

`Core Dump Vector` A hexadecimal value representing the condition(s) that cause(s) a core dump. This hexadecimal value is a bit map of the four reset conditions (from least to most significant bit):

warm start
cold 2 restart
cold 1 restart
reboot

A value of 0 indicates that the vector is cleared or not set. See Table 8-3 on page 8-137.

Table 8-3. Vector-Condition Mapping

value	warm-start	cold-2	cold-1	reboot
0	n	n	n	n
1	y	n	n	n
2	n	y	n	n
3	y	y	n	n
4	n	n	y	n
5	y	n	y	n
6	n	y	y	n
7	y	y	y	n
8	n	n	n	y

Continued on next page

Table 8-3. Vector-Condition Mapping — *Continued*

value	warm-start	cold-2	cold-1	reboot
9	y	n	n	y
a	n	y	n	y
b	y	y	n	y
c	n	n	y	y
d	y	n	y	y
e	n	y	y	y
f	y	y	y	y

`Set Vector Command Option`

The user-specified SPE prior to the core dump. For simplex SPE systems this field is always `spe-active` unless the vector is cleared or not set. In duplex SPE systems, the field is either `spe-active` or `spe-standby` unless the vector is cleared or not set. If the vector is cleared or not set in either a duplex or simplex SPE system, this field is blank.

`Core Dump Time`

The time of the core dump for SPE A and SPE B. If the system has a simplex SPE, a timestamp for SPE A (or the active SPE) and non duplicated SPE" are displayed for SPE B. If the core dump cannot be accessed, `can't access` displays for the corresponding SPE. For example, in a High or Critical Reliability System where SPE B is not refreshed, SPE B displays `can't access` instead of a timestamp. If the MSS device storing the core dump timestamp is busy for any reason, `device busy` displays at the terminal.

list configuration

Hardware configuration reports list, for each circuit pack in the group specified, the type, code, suffix, and vintage of the requested circuit packs as installed in the switch, and all ports assigned to the circuit pack.

Action/ Object	Qualifier	Qualifier Description	Logins	Default	Feature Interactions
list configuration	***hardware-group*** ***print*** ***schedule***	Enter a group listed in the Hardware Groups section below. Report sent to printer. Command is validated and then a scheduling form displays to schedule execution of the command. The command is then placed in the command queue and is executed at the specified time. The information displayed by the command is sent to the system printer instead of the screen.[1] Examples: **list configuration carrier 2c schedule** **list configuration port-network 5** **list configuration stations print**	init inads craft cust rcust	none	none

1 Refer to the Report Scheduler and System Printer feature specification for more details.

NOTE:
list configuration software-version is discussed separately under its own heading.

Hardware Groups

Enter one of the following hardware groups:

`carriers all`	Displays all circuit packs administered and/or physically inserted in the port, switch node, and control carriers on the system.
`board PCSS`	Displays all assigned ports on the circuit pack specified by cabinet, carrier, and slot.
`carrier c`	Displays all circuit packs and assigned ports on a specified carrier.
`control`	Displays all circuit packs in the control complex.
`ds1`	Displays all the DS1 (TN722, TN767, and TN464) port circuit packs administered and/or physically inserted.
`port-network pn#`	Displays all circuit packs located in a specified port network. (The **list cabinet** command gives the port network number(s) associated with a particular cabinet.) Circuit packs on switch node carriers are not displayed when the port-network qualifier is entered. To display switch node circuit packs, use the ***all***, ***carrier*** or ***board*** qualifiers.
`stations`	Displays all circuit packs that can be assigned stations, including DS1 circuit packs for remote stations.
`trunks`	Displays all circuit packs that can be used for administering trunks.

Output

The following display shows the output from **list configuration all**.

```
 list configuration all                                                  Page   1
                              SYSTEM CONFIGURATION

Board                                                      Assigned Ports
Number   Board Type              Code     Vintage    u=unassigned t=tti p=psa

01C02    ATM PNC EI              TN2305   HW02 FW102
01C03    ATM PNC EI              TN2305   HW02 FW102
01C04    DIGITAL LINE                     no board   01 02 03 u  u  u  u  u
01C05    ANALOG LINE                      no board   01 u  u  u  u  06 u  u
                                                     u  u  u  u  u  u  u  u
01C07    DS1 INTERFACE            TN464F  000006     u  u  u  u  u  u  u  u
                                                     u  u  u  u  u  u  u  u
                                                     u  u  u  u  u  u  u  u
01C08    DID TRUNK                TN753   000021     u  u  u  u  u  u  u  u
01C12    DS1 INTERFACE            TN464FP HW02 FW063 u  u  u  u  u  u  u  u
                                                     u  u  u  u  u  u  u  u
                                                     u  u  u  u  u  u  u  u
01C16    DS1 INTERFACE           TN2405AP HW03 FW02  01 u  u  04 u  u  u  u
                                                     u  u  u  u  u  u  u  u
                                                     u  u  u  u  u  u  u  u
Enter 5 character board number; cabinet(1-30):carrier(A-E):slot(0-20)
12345678911234567890123456789012345678901234567890123456789012345678901234567890
```

Field descriptions

Board Number	The functional name of the circuit pack
`Code`	The TN or UN code and suffix of the circuit packs

NOTE:
The letter P (programmable) is added to the suffix of all the downloadable boards in the following forms:

- list configuration
- status firmware download
- change firmware download

`Vintage`	The vintage number of the circuit pack
`no board`	The circuit pack is administered but not physically installed
`conflict`	The circuit pack administered to the slot differs from the circuit pack that is physically installed
`no link`	The T1 link is down to a DS1 circuit pack

The following display shows output from the **list configuration ds1** command.

```
list configuration ds1

                    SYSTEM CONFIGURATION - DS1 Circuit Packs

Location   Code    Vintage     Signaling         Name            CSU MOD

01B05      TN464F  000002      isdn-pri                          120A1
01B06      TN464D  000002      isdn-pri                          n/a
01B10      TN767C  000003      none                              n/a
01B11      TN767E  000003      robbed-bit                        120A1
01B12      TN767E  conflict    none                              <blank>
01C06              no board    none                              <blank>
01C13      TN464E  000003      common-channel                    unknown
01C16      TN767D  000024      robbed-bit                        unkonwn
01C18      TN464F  000002      isdn-pri                          none
```

Field descriptions

`Signaling` Displays only when **list configuration ds1** is entered. The contents of the field are the same as the signaling mode administered for the ds1 circuit pack or `none` if the circuit pack is not administered.

`Name` Displays only when **list configuration ds1** is entered. The contents of the field are the same as the signaling mode administered for the ds1 circuit pack or `none` if the circuit pack is not administered.

`CSU MOD` Displays only when **list configuration ds1** option is selected. The field contains the identification number of the Integrated CSU module present on the DS1 circuit pack (TN767E or later / TN464F or later) or `none`. If the circuit pack is a TN464E or TN767D, `unknown` displays. If the circuit pack is a TN464D or TN767C or earlier suffix DS1 board, then `n/a` displays.

list configuration license

The License Serial Numbers screen displays the license file serial number(s) embedded in the current License File. In duplicated systems, use the **list configuration license long** command to display the serial number of both active and standby hardware from one of the following circuit packs:

- TN2404 Vintage 3 Processor (csi)
- TN2402 Vintage 3 Processor (si)
- UN332C Vintage 5 MSSNET (r)

```
list configuration license long

                        License Serial Numbers

                            SPE_A                          SPE_B

      Serial Number:     01DR02123456                  02DR02123456
```

Screen 8-15. License Serial Numbers screen (list configuration license long)

Serial Number

Valid entries	Usage
Circuit pack serial number	This field displays the electronically-readable serial number of the circuit pack. The serial number has the form YYFFMMSSSSSS, where the values are the following codes: YY — Year FF — Factory MM — Month SSSSSS — Sequence number

The command obtains the serial numbers of the active hardware by querying the individual circuit packs each time the command is invoked. There is no memory cache of serial numbers.

Action/ Object	Qualifier	Qualifier Description	Logins	Defaults	Feature Interactions
list configuration	**license**	(no qualifier) - displays the license file serial number in a simplex system **long** - displays both active and standby license file serial numbers	init inads draft dadmin super-user		

list config software-version

This command displays

- Software version numbers and compatibility indexes of the software load modules stored in system memory (RAM) and on the MSS devices (tape).
- The dates and times when translation and announcement data were last saved to the MSS.
- Information about any software update files that have been applied to the system. See "Software Upgrade" in Chapter 5, ''Routine Maintenance Procedures'' for an explanation of software versions and compatibility indexes.

Action/ Object	Qualifier	Qualifier Description	Logins	Feature Interactions
list configuration software-version	***memory-resident | long***[1] ***print*** ***schedule***	Data for the active SPE or both SPEs (High or Critical reliability systems)[2] Report sent to printer. Command is validated and then a scheduling form displays to schedule execution of the command. The command is then placed in the command queue and is executed at the specified time. The information displayed by the command is sent to the system printer instead of the screen.[3] RAM-resident files only. Fields for tape data contain `n/a`	init inads craft	none

1 On high and critical reliability systems, only fields for the active SPE are displayed unless the long option is specified.

2 Fields in the SPE-B column are blank for standard reliability systems.

3 Refer to the Report Scheduler and System Printer feature specification for more details.

Output

If the tape or memory card contains a core dump file, fields for tape or memory card data display `coredump`. When a core dump is present, all other files on the device are marked invalid.

If the memory card cannot be read at the time the command is entered, the relevant fields display `no tape or memory card`. (This does not indicate that the system does not recognize the presence of the device.)

The following shows the output from **list configuration software-version**.

```
list configuration software-version                          Page   1

                              SOFTWARE VERSIONS
                     SPE-A                          SPE-B
          UPDATE FILE
 Creation (GMT) Date: 4:17 pm FRI NOV 3,1995      4:17 pm FRI NOV 3, 1995
    Old Version Tape: G3V4i.03.0.044.0            G3V4i .03.0.044.0
 Old Identifier Tape: none                        none
 New Identifier Tape: 000010                      000010
        Update State: new update ready to be      entirely applied
                      applied                     to memory

     SOFTWARE VERSION
     Memory Resident: G3V4i.03.0.044.0            G3V4i .03.0.044.0
   Mem Card Resident: none                        none
   Update Identifier: none                        000010

     TRANSLATION DATE
     Memory Resident:  1:01 pm THU NOV 2, 1995
   Mem Card Resident:  1:01 pm THU NOV 2, 1995
list config log applied patch to standby

           press CANCEL to quit --  press NEXT PAGE to continue
```

Field descriptions, Page 1

Update File Section	Displays information pertaining to software field-update files or “patches.”
`Creation (GMT) Tape and (GMT) Disk`	When the update file was originally created, in Greenwich Mean Time (GMT). Note that this is *not* the time at which the update file was written to the MSS device.
`Old-Version Tape and Disk`	The software version for which the update was created.
`Old-Identifier Tape and Disk`	Which previous update file this update file expected to find stored in the MSS when it was applied.
`New-Identifier Tape and Disk`	Uniquely identifies the current update file.
Software Version Section	Displays information related to the current software-load module stored in memory and in the MSS.
`Memory Resident`	Version number of the RAM-resident load module.
`Mem Card Resident`	Version of memory card resident load module. If a memory card is not installed, this field will display “no card”.
`Update-identifier (Patch Identifier)`	This uniquely identifies the update file, if any, that has been applied to memory.
`Update-state (Patch State)`	The status of the software field-update (“patch”) file id is displayed.

Translation Date Section	Displays information related to the translation files as stored in memory and the MSS.
`Memory Resident`	Date and time when translation data was last read from the MSS into memory. This is stored in SPE memory and is not modified by changes to translation data. A **save translation** command updates this date. If `Date invalid` is displayed, the timestamp does not contain the expected information.
`Mem Card Resident`	The date and time when translation data was last saved to the memory card. If a memory card is not installed, this field will display `no card`.

```
list configuration software-version                          Page   2

                              SOFTWARE VERSIONS
                      SPE-A                          SPE-B
       PI FW VERSION                          PI FW VERSION
      PI 1 Resident: 000162                  PI 1 Resident: 000162
      PI 2 Resident: none                    PI 2 Resident: none
     Flash Resident: 000162                 Flash Resident: 000162

      PI 1 Resident: 000162                  PI 1 Resident: 000162
      PI 2 Resident: none                    PI 2 Resident: none
     Flash Resident: 000162                 Flash Resident: 000162



    ANNOUNCEMENT DATE                      ANNOUNCEMENT DATE
   Mem Card Resident: none                Mem Card Resident: none

    PKT-CTRL FW VERSION                    PKT-CTRL FW VERSION
   Pkt-Ctrl Resident: 000021              Pkt-Ctrl Resident: 000021
      Flash Resident: 000021                 Flash Resident: 000021
```

Field descriptions, Page 2

P1 FW Version Section	Displays information related to the Processor Interface (PI) circuit pack (resident copy and corresponding tape file) firmware.
`PI 1 Resident`	The version of firmware in the first PI circuit pack in the control carrier.
`PI 2 Resident`	The version of firmware in the second PI circuit pack in the control carrier.
`Flash Resident`	The version of PI firmware residing on the system flash memory.

Announcement Date Section	Displays information related to the announcement files. Information is displayed for the memory resident copy as well as the corresponding MSS file
`Mem Card Resident`	The last date and time that announcement data was saved to the memory card. If the memory card is not installed, this field displays `no card`.
PKT-CTRL FW Version Section	displays information related to the Packet Control firmware. Information is displayed for the Packet Control circuit pack resident copy as well as the corresponding tape file
`Pkt-ctrl Resident`	The version of firmware in the Packet Control circuit pack.
`Flash Resident`	The version of the Packet Control circuit pack residing on the system flash memory.

Some things to note when using **list configuration software-version** are:

1. For simplex systems, the fields under column “SPE_B are blank and the optional **Long** qualifier is not part of the command line.
2. For a High or Critical Reliability System, the fields under the column of the standby SPE are blank if the optional **long** modifier is not given.
3. If the tape or memory card contains a core dump file system, fields for the tape or memory card contain ***coredump***. This is because in a coredump file system all files other than the ***coredump*** file are marked as invalid.
4. If MSS cannot be read when the command is issued, the string **no tape** or **none** for no memory card is in the appropriate fields on the screen. This does not mean that the system thinks there is no tape, only that the software was unable to read the appropriate information when requested.
5. If the command is issued using the ***memory-resident*** option, the fields on the form associated with the tape contain **n/a**.
6. When the status of the update field appears, the following strings are used (for more information refer to step c of this list):
   - `none in memory` — no update has been applied to memory.
   - `immediate partially applied` — an error condition that is valid only when an update that is in the process of being applied fails. Check the validity of the update file that was sent, and then check the hardware error log for tape errors, and follow standard maintenance procedures.
   - `all immediate applied deferred pending` — a valid update file was received by the switch, and all the immediate sub-patches were applied. This state indicates that there are deferred sub-patches in the update file, and a system reset of the proper level has not occurred since the update file was received.

- `deferred partially applied` — an error condition that is valid only when a update that is in the process of being applied fails. Check the validity of the update file that was sent, and then check the hardware error log for tape errors, and follow standard maintenance procedures.
- `entirely applied to memory` — the update associated with the memory-resident identifier has been completely applied to memory.

list directory

list directory board ppcss

This command lists all files in the path directory of the ppcss board memory filesystem.

NOTE:
The forward slash is the default path for listing files in the root directory. To list the files in a directory other than the “1” root directory, type the complete path.

Output

```
list directory board 1C12                                          Page   1
                                LIST DIRECTORY

  Board                File/Directory                    Creation       Size
 Location                   Name                       Date      Time     Kb

  01C12   D:/                                       2000/03/01 04:59:23
  01C12   F:fwdlimg464fv23                          2000/01/01 00:00:00  367
  01C12   F:fwdlimg2405av01                         2000/02/29 23:59:59  493


D = Directory F = File
```

list disabled-mos

This command displays all the MOs that have been maintenance disabled.

Action/ Object	Qualifier	Qualifier Description	Logins	Defaults	Feature Interactions
list disabled-mos	***print***	Report sent to printer.	init inads	none	none
	schedule	Schedule execution of the command. The information displayed by the command is sent to the system printer instead of the screen.[1] Examples: **list disabled-MOs** **list disabled-MOs print** **list disabled-MOs schedule**			

1 Refer to the Report Scheduler and System Printer feature specification for more details.

Output

```
list disabled-MOs

          DISABLED MAINTENANCE OBJECT INFORMATION

        Maintenance Name   Location    Status
        ALL                            Enabled
        DIG-LINE           02A1203     Disabled


 Command successfully completed
```

Field descriptions

`Maintenance Name` The type of maintenance object or group of maintenance objects that have been disabled. `All` is also valid.

`Location` The physical location of the disabled maintenance object. Remains blanks if all maintenance objects have been disabled (**disable all**) or all MOs of a specific type have been disabled (**disable MO-all**).

`Status` Whether the maintenance object or group of maintenance objects is `Enabled` or `Disabled`.

list history

The list history command generates a log listing of the most recently completed “data affecting” administration and maintenance commands. Data commands are those administration and maintenance commands that change the data state associated with any object and qualifier in the system. Administration data commands affect translation data, while maintenance data commands affect state information. For example, **change station** is a data command, whereas **display station** is not.

All information in the transaction log is saved as translation data when the **save translation** command is performed (LIFO order). When the switch COLD I starts or reboots, the saved translation, and thus the transaction log, is loaded. This way, the translation data and the data in the transaction log remain compatible.

Action/ Object	Qualifier	Qualifier Description	Logins	Defaults	Feature Interactions
list history	***print***	Report sent to printer.	init inads craft cust browse nms	none	See below
	schedule	Command is validated and then a scheduling form displays to schedule execution of the command. The command is then placed in the command queue and is executed at the specified time. The information displayed by the command is sent to the system printer instead of the screen.[1] Examples: **list history** **list history print** **list history schedule**			

1 Refer to the Report Scheduler and System Printer feature specification for more details.

Feature Interactions

The translation log is written to the memory card as translation data when the **save translation** command is executed. The translation data is time stamped when saved. This time stamp is noted when translation is loaded from the memory card and included in all recent change history reports.

When a user requests a recent change history report, there could be other users concurrently issuing data commands and altering the contents of the transaction log. Therefore, if the user pages the entire way through the report, the oldest entries in the transaction log (maximum 250 commands) may have been overwritten by data commands issued by these other users. Should this occur, the final entries of the report show the data commands issued by the other users since the recent change history report was originally requested.

Also, if you use **set time** to alter the system clock, it could look as if the recent change history report is not in true LIFO order.

Output

```
list history                                                                Page 1
                                        HISTORY
                   Date of Loaded Translation: 10:08pm Wed Feb 14,2001

 Date Time   Port      Login   Actn   Object       Qualifier
 2/18  12:34 1A0301    tti-m   cha    station      4000
 2/18  12:23 1B0401    psa-a   cha    station      4003
 2/16  09:44 2B0608    tti-s   cha    station      4003
 2/16  09:22 1D0708    psa-d   cha    station      4055
 2/15  15:26 01B1203   actr-d  cha    station      2005 EMERGENCY EXT
 2/15  15:25 01B1203   actr-u  cha    station      2004
 2/15  15:20 SYSAM-LCL init    cha    system-param features
 2/15  15:17 NET       inads   dup    station       20001 start 30001 count 8
 2/15  15:16 EPN       cust    add    station      507
 2/15  15:15 EPN       ncust   logn
 2/15  15:01 NET       cust    add    station      502
 2/15  14:56 NET       cust    add    station      501
 2/15  14:23 EPN       cust    cha    dialplan
```

Field descriptions

`Date`	The date the command was issued (mm/dd)
`Time`	The time the command was issued (hh:mm)
`Port`	Indicates the port type to which the user was connected when the command was issued. If the “CTA/PSA/TTI Transactions in History Log” field is **y** Feature-Related System Parameters screen, TTI, PSA, CTA and ACTR moves are recorded. These transactions appear as two separate records; one recording the moved-from port, and the other one recording the moved-to port. IP phone registrations are also recorded.
`Login`	User login
`Actn`	The action part of the command, specifying the operation to be performed. This field is truncated after 4 characters.
`Object`	The qualifier specifying the object of the command. Where the object is multiple words in length, only the first word is displayed in the object field. All succeeding words are treated as qualifiers.
`Qualifier`	One or more qualifiers describing the characteristics of the action/object pair. This field is truncated after 31 characters.

list ip-route

This command displays a list of the IP routes from the Avaya DEFINITY Server out to the LAN. Enter the “board” parameter and specify the C-LAN circuit pack for the IP routes you want to see (for example, **list ip-route board UUCss**).

Action/ Object	Qualifier	Qualifier Description	Logins	Defaults	Feature Interactions
list ip-route	***board UUCss***	Board Location Example: **list ip-route board 01A03**	init inads craft	none	none

Output

The following example shows the output from the **list ip-route** command.

```
list ip-route
                                    IP ROUTING

 Route   Destination                        C-LAN          Route  Accepted
 Number     Node          Gateway           Port   Metric  Type   by C-LAN

 xxx     xxxxxxxxxxxxxxx  xxxxxxxxxxxxxxxx  xxxxx  x       xxxx   xxxxxx
 xxx     xxxxxxxxxxxxxxx  xxxxxxxxxxxxxxxx  xxxxx  x       xxxx   xxxxxx
 xxx     xxxxxxxxxxxxxxx  xxxxxxxxxxxxxxxx  xxxxx  x       xxxx   xxxxxx
```

Field descriptions

`Route Number`	IP-route number
`Destination Node`	Destination of the route. This name is administered on the **Node Name** form. `Default` indicates the default route.
`Gateway`	The node name of the Gateway through which the destination is to be reached. This name is administered on the **Node Name** screen.
`C-LAN Port`	Indicates the C-LAN port location that provides the interface for the route.

`Metric`

Specifies the desirability of the IP route in terms of the efficiency of data transmission over the route. Valid entries are `0` (a simple route) and `1` (a complex route). A metric value of `1` is used only when the switch has more than one C-LAN board installed. A metric-1 route diverts usage of the route to a metric - 0 route, if available.

`Route Type`

Display-only. Specifies whether this is a **network** or **host** route. A **network** route is a route to all nodes on the (sub)network specified in the `Destination Node` field. A **host** route is a route to the single node specified in the `Destination Node` field.

`Accepted by CLAN`

Indicates whether a C-LAN circuit pack has accepted the administered IP-route. Routes for a link are downloaded to the C-LAN circuit pack when the link comes into service. Possibilities include:

- `accepted` – the route has been accepted by the C-LAN board
- `rejected` – the route has been rejected by the C-LAN circuit pack. The Gateway may not be on the attached ethernet subnet or may not be the IP address of the far end of the PPP link.
- `pending` – the route has not been sent to the C-LAN circuit pack, or it has been sent but no reply has been received. Typically, this status changes to `accepted` or `rejected` when some condition changes, such as a link coming up.
- `obsolete` – the route is no longer needed (some host routes were needed in R7 but are no longer needed in subsequent releases, or are duplicates of existing routes)

list isdn-testcall

This command displays the ISDN-PRI trunks in use for ISDN-PRI test calls. This is useful to determine which trunk is in use for an outgoing ISDN-PRI test call.

Action/ Object	Qualifier	Qualifier Description	Logins	Defaults	Feature Interactions
list isdn-testcall	***print***	Report sent to printer.	init inads craft	none	none
	schedule	Schedule execution of the command. The information displayed by the command is sent to the system printer instead of the screen.[1] Examples: **list isdn-testcall** **list isdn-testcall print** **list isdn-testcall schedule**			

1 Refer to the Report Scheduler and System Printer feature specification for more details.

Output

```
list isdn-testcall

               ISDN-PRI TESTCALLS
     B-Channel  Start Time    Duration  M/T Port
     078/001    25/12:36      120       1B1102


 Command successfully completed
```

Field descriptions

`B-Channel`	The trunk in use for the ISDN-PRI test call (trunk group number/ member number).
`Start Time`	The time the test call started (dd/hh:mm format).
`Duration`	The expected duration of the test call.
`M/T Port`	The TN771 Maintenance/Test circuit pack's digital port address (in cabinet/carrier/slot/circuit format) in use for the outgoing asynchronous ISDN-PRI test call.

list marked-ports

This command lists all the ports that have been marked unusable with the **mark port** command (maximum of fifteen marked ports per page).

Action/ Object	Qualifier	Qualifier Description	Logins	Defaults	Feature Interactions
list marked-ports	***print***	Report sent to printer.	init inads craft cust rcust bcms browse	none	none
	schedule	Schedule execution of the command. The information displayed by the command is sent to the system printer instead of the screen.[1] Examples: **list marked-ports** **list marked-ports print** **list marked-ports schedule**			

1 Refer to the Report Scheduler and System Printer feature specification for more details.

Output

```
list marked-ports

              MARKED-PORT INFORMATION
     Port      Board-Type
     1C0101    DIG-BD
     1C0601
     1C0702    DIG-BD

 Command successfully completed
```

Field descriptions

`Port`	The port address (cabinet-carrier-slot-circuit) of the marked port.
`Board-Type`	The type of circuit pack containing the marked port. If this circuit pack information is no longer available because the circuit pack was removed after the port was marked, the `Board-Type` field is blank.

list measurements clan ethernet

This command provides a 24-hour history of important packet-level statistics from which you can infer some LAN performance characteristics. For example,

- high collision counts could indicate high traffic on the LAN segment (congestion on the bus).
- high Cyclic Redundancy Check (CRC—detects and corrects errors on every frame) errors could suggest that
  - — the LAN connection may be “noisy”
  - — a wire connection is loose
  - — a wire is frayed or broken.

The 24-hour history gives the ability to look back at these measures if the trouble cleared.

The data is collected at 15-minute intervals over 24 hours for the Cyclic Redundancy Check (CRC) and collisions for ethernet connections. If the data cannot be retrieved for the 15-minute interval, `N/A` appears in the field. The delta (the change from the last inquiry) and the total are provided for each error count. After the occurrence of “N/A” (not available), the delta equals the total.

The primary use of this command is to quickly and unambiguously determine if the fault lies within the Avaya-provided equipment or if the fault is with the LAN or LAN administration to which the Avaya DEFINITY Server switch is connected.

Action/ Object	Qualifier	Qualifier Description	Logins	Default	Feature Interactions
list measurements	***clan ethernet***	Designates ethernet connection	init inads craft customer		
	UUCss	Cabinet-carrier-slot address of the C-LAN circuit pack			
	print	Report sent to printer			
	schedule	Schedule execution of the command.[1] Examples: **list measurements clan ethernet 1A05** **list measurements clan ethernet 1A05 print**			

1 Refer to the Report Scheduler and System Printer feature specification for more details.

Output

The following example shows the output from **list measurements ethernet**.

```
list measurements clan ethernet 1C1017                              Page 1 of x

Switch Name: sierra                              Date:4:07pm MON AUG 01,1999

               C-LAN ETHERNET PERFORMANCE MEASUREMENT DETAILED REPORT



Date      Time           CRC Check                Collision Count
                         total        delta       total           delta
08/01     0308             650           50         650            250
08/01     0253             600          600         400            400
08/01     0238             N/A          N/A         N/A            N/A
08/01     0223      1000000570           20 10000000570             20
08/01     0208      1000000550  10000000550 10000000550    10000000550
```

Field descriptions

Date	The date that the data was collected.
Time	The current 15-minute interval in which the action was performed
CRC Check	The error count for CRC errors
Total	The total value of the counter on the board

NOTE:
The counter value can be up to 11 digits long because of the 32-bit counter on the board. After the occurrence of an “N/A,” the delta equals the total. Busyout or release of a board or a port, the **reset board** command, and reseating the board all clear the firmware counters.

Delta	The difference between the current and the previous sample
Collision Count	The error count for collisions on the ethernet

list measurements clan ppp

This command provides a 24-hour history of important packet-level statistics from which you can infer some LAN performance characteristics. For example,

- Invalid frames—the number of frames that are misaligned
- CHAP failures—Challenge Handshake Authentication Protocol—the number of attempts for ppp authentication that failed
- High Cyclic Redundancy Check (CRC)—detects and corrects errors on every frame) errors could suggest that the connection may be “noisy”

The 24-hour history allows you to look back at the measures if the trouble cleared.

Data is retrieved for 15-minute intervals for 24 hours for CRC, Invalid Frame and Chap Failures for PPP connections. If the data cannot be retrieved for the 15 minute interval, `N/A` displays in the field. The delta (the change from the last inquiry) and the total are provided for each error count. After the occurrence of “N/A,” the delta equals the total.

Action/ Object	Qualifier	Qualifier Description	Logins	Default	Feature Interactions
list measure-ments	***clan ppp***	Link identifier (primary or secondary)	init inads craft customer	Primary	
	UUCCSSpp	Port Address			
	print	Report sent to printer			
	schedule	Schedule execution of the command.[1]			
		Examples: **list measurements clan ppp** **list measurements**			

1 Refer to the Report Scheduler and System Printer feature specification for more details.

Output

The following example shows the output from **list measurements clan ppp**.

```
list measurements clan ppp 1C1001                                Page 1 of x
Switch Name: sierra                                              Date:02/02/1999
    C-LAN PPP PERFORMANCE MEASUREMENT DETAILED REPORT

Date      Time         CRC Check           Invalid Frame          CHAP Failures
                     Total     Delta     Total    Delta          Total    'Delta

02/01     03:08          85        25      185       85              5        0
02/01     02:53          60        60      100      100              5        5
02/01     02:38         N/A       N/A      N/A      N/A            N/A      N/A
02/01     02:23     1000060        10  1000090       10             25        5
02/01     02:08     1000050   1000050  1000080  1000080             20       20
```

Field descriptions

`Date`	The date that the data was collected.
`Time`	The current 15-minute interval in which the action was performed
`CRC Check`	The error count for CRC errors
`Total`	Total value of the board counter.
	The counter value can be up to 7 digits long. After the occurrence of “N/A” the delta equals the total. Busyout or release of a board or a port, (**reset board)** and reseating the board all clear the firmware counters.
`Delta`	The difference between the current and the previous sample
`Invalid Frame`	The number of invalid (misaligned) frames detected.
`CHAP Failures`	The number of failed attempts for ppp authentication

list measurements clan sockets

list measurements clan sockets x

List measurements clan sockets works on IP Media Processor & Medpro.

Action/ Object	Qualifier	Qualifier Description	Logins	Default	Feature Interactions
list measurements clan sockets	***hourly <CCccss>***	Lists the measurements for the last 24 hours, from current hour backwards, for the indicated board. Examples: **command x**		none	
	summary yesterday -peak summary today-peak summary last-hour	Lists the measurements for the previous days peak, in socket usage (Erl), for the CLAN boards administered on the IP interfaces form.		none	
	detail yesterday-peak <CCccss> detail today-peak <CCccss> detail last-hour <CCccss>			none	

These measurements are displayed by software. The screen output may span multiple CLAN boards.

Output

The following screen shows the Measurements CLAN SOCKETS hourly - Page 1.

```
list measurements clan sockets hourly 01B12  Page   1

Switch Name:                                  Date: 5:27 pm  WED MAR 26, 1992
                      CLAN SOCKETS HOURLY REPORT
                        (Last 24 Hours)

                                Socket          Socket
Meas                   Avail    Usage   Socket  Denial  %        % Time
Hour  Board  Region    Sockets  (Erl)   peg     peg     Denials  ASB
0400  01B12  3         xxx      xxxx.x  xxxxx   xxxxx   xx.xx    xx.xx
0300  01B12  3         xxx      xxxx.x  xxxxx   xxxxx   xx.xx    xx.xx
0200  01B12  3         xxx      xxxx.x  xxxxx   xxxxx   xx.xx    xx.xx
0100  01B12  3         xxx      xxxx.x  xxxxx   xxxxx   xx.xx    xx.xx
0000  01B12  3         xxx      xxxx.x  xxxxx   xxxxx   xx.xx    xx.xx
2300  01B12  3         xxx      xxxx.x  xxxxx   xxxxx   xx.xx    xx.xx
2200  01B12  3         xxx      xxxx.x  xxxxx   xxxxx   xx.xx    xx.xx
2100  01B12  3         xxx      xxxx.x  xxxxx   xxxxx   xx.xx    xx.xx
2000  01B12  3         xxx      xxxx.x  xxxxx   xxxxx   xx.xx    xx.xx
1900  01B12  3         xxx      xxxx.x  xxxxx   xxxxx   xx.xx    xx.xx
1800  01B12  3         xxx      xxxx.x  xxxxx   xxxxx   xx.xx    xx.xx
1700  01B12  3         xxx      xxxx.x  xxxxx   xxxxx   xx.xx    xx.xx

Command successfully completed
```

Field descriptions

`Meas Hour`	The hour the measurement was taken. Switches in multiple time zones are treated as in the current MMI reports. We do not assume that the customer has made any correlation between LAN regions and time zones. Range: 0000 - 2300.
`Board`	The cabinet, carrier, and slot for the specified board. Range: CCccss.
`Region`	The network region that the CLAN for this measurement is in. (The increase to 44 regions is required by [75101-2].) Range: 1-44.
`Avail Sockets`	The number of available sockets on the specified Clan board. Range: 0-999.
`Socket Usage (Erl)`	The total time, in Erlangs, that is available from sockets on this C-lan board. Calculated by: (Total Socket Seconds of usage) / 3600. Range: 0-9999.9.
`Socket peg`	Total number of times a C-lan socket on the board was allocated to a call or link. Range: 0-65535.
`Socket Denial peg`	Total number of times a C-lan socket on the board was needed for a call or link, but was not available. Range: 0-65535.
`% Denials`	(Socket Denial peg)/(Socket Denial peg + Socket peg). Range: 0-99.
`% Time ASB`	The percentage of time during the measured interval that all C-lan sockets on the board were unavailable for use. Range: 0-99.

The following screen shows Measurements CLAN SOCKETS summary yesterday-peak - Page 1.

```
list measurements clan sockets summary yesterday-peak  Page   1

Switch Name:                                  Date: 5:27 pm  WED MAR 26, 1992

                  CLAN SOCKETS PEAK REPORT

                Peak Hour: 0400

                                Socket          Socket
Meas                  Avail     Usage   Socket  Denial  %        % Time
Hour  Board  Region   Sockets   (Erl)   peg     peg     Denials  ASB
0400  01B12  2        xxx       xxxx.x  xxxxx   xxxxx   xx.xx    xx.xx
0400  01B13  3        xxx       xxxx.x  xxxxx   xxxxx   xx.xx    xx.xx
0100  01B14  4        xxx       xxxx.x  xxxxx   xxxxx   xx.xx    xx.xx
0100  01B15  1        xxx       xxxx.x  xxxxx   xxxxx   xx.xx    xx.xx

Command successfully completed
```

The reports list measurements clan sockets summary today-peak and list measurements clan sockets summary last-hour are similar to the above report.

The following screen shows the Measurements CLAN SOCKETS detail yesterday-peak - Page 1.

```
list measurements clan sockets detail yesterday-peak 01B12  Page   1

Switch Name:                                  Date: 5:27 pm  WED MAR 26, 1992

                  CLAN SOCKETS PEAK REPORT

                Peak Hour: 0400

                                Socket          Socket
Meas                  Avail     Usage   Socket  Denial  %        % Time
Hour  Board  Region   Sockets   (Erl)   peg     peg     Denials  ASB
0400  01B12  3        xxx       xxxx.x  xxxxx   xxxxx   xx.xx    xx.xx


Command successfully completed
```

The reports list measurements clan sockets today-peak list and measurements clan sockets last-hour are similar to the above report.

list measurements ds-1

This command lists performance measurements of a DS-1 link indicating the quality of the DS-1 physical interface between the system and a far end system. The **ds1 summary** option provides a summary report while **ds1 log** provides a detailed report.

NOTE:
The **list measurements** command has many more options than documented here. Only those options dealing with DS1 board are documented below.

Action/ Object	Qualifier	Qualifier Description	Logins	Defaults	Feature Interactions
list measure-ments	***log***	Detailed report generated	init inads craft cust rcust browse nms bcms	none	none
	summary	Summary report generated			
	ds1_location	The physical location of a DS1 circuit pack entered as cabinet-carrier-slot.			
	print	Report sent to printer.			
	schedule	Schedule execution of the command. The information displayed by the command is sent to the system printer instead of the screen.[1] Examples: **list measurements ds1 log 2a18** **list measurements ds1 summary 2a18 print** **list measurements ds1 summary 2a18 schedule**			

1 Refer to the Report Scheduler and System Printer feature specification for more details.

Output

```
list measurements ds1 summary 2a19                      SPE A

 Switch Name:                  Date: 1:25 pm  THU APR 16, 1992

      DS-1 Link Performance Measurements Summary Report

   Counted Since: 1:20 pm  THU APR 16, 1992
   Number of Seconds Elapsed Into Current 15-min Interval: 323
   Total of Valid 15-min Intervals in Past 24-hr Period:   0
                                          Total of  Current
                 Worst_15-Min_Interval    24-hr     15-Min Interval
   Category        Date   Time   Count    Count     Count
 Errored Seconds   4/16   13:20     0      0         4
 Bursty Err Secs   4/16   13:20     0      0         4
 Severely Err Secs 4/16   13:20     0      0         0
 Failed Seconds    4/16   13:20     0      0         0

 Command successfully completed
```

Field descriptions (list measurements ds1-summary)

`Counted Since`	The start time and date when the measurement counters were cleared or the DS1 circuit pack was administered.
`Number of Seconds Elapsed Into Current 15-min Interval`	The number of seconds from the beginning of the current 15-minute interval (0 - 900).
`Total of Valid 15-min Intervals in Past 24-hr Period`	The total number of 15-minute intervals in the past 24-hour period that contain valid data (0 - 96).
`Category`	The four categories correspond to four measurement error counters. The four categories are “1” “1” “1” and “”. The meanings of each category follow: ■ `Errored Seconds`: the value of the errored seconds counter for the specified 15-minute interval (0 - 900 or N/A if data for the 15-minute interval is invalid). ■ `Bursty Err Secs`: the value of the bursty errored seconds counter for the specified 15-minute interval (0 - 900 or N/A if data for the 15-minute interval is invalid). ■ `Severely Err Secs`: the value of the severely errored seconds counter for the specified 15-minute interval(0 - 900 or N/A if data for the 15-minute interval is invalid). ■ `Failed Seconds`: the value of the failed seconds counter for the specified 15-minute interval (0 - 900 or N/A if data for the 15-minute interval is invalid).

Worst_15-Min_ Interval	The date(Date), end time(Time), and error count (Count; from 0 to 900 in increments of four) of the 15-minute interval in the previous 24-hour period that contains the maximum value for each of the four error categories.
Total of 24-Hour Count	The sum of all valid 15-minute counts for the previous 24-hour period for each of the four error categories (0 - 65535).
Current 15-Minute Interval	The error count for the current (incomplete) 15-minute interval for each of the four error categories (0 - 900 or N/A if data for the 15-minute interval is invalid).

```
list measurements ds1 log 2a19                        SPE A

 Switch Name:                  Date: 1:26 pm  THU APR 16, 1992

       DS-1 Link Performance Measurements Detailed Log Report
   Counted Since: 1:20 pm  THU APR 16, 1992
               ERRORED BURSTY    SEVERELY   FAILED    VALID
   DATE  TIME  SECOND  ERR SECS  ERR SECS   SECONDS   INTERVAL
   4/16   13:05    0     0         0            0        y
   4/16   13:20    0     0         0            0        y

 Command successfully completed
```

Field descriptions (list measurements ds1 log)

Counted Since	The start time and date when the associated measurement counters were cleared or the DS1 circuit pack was administered.
DATE	The date of the 15-minute interval.
TIME	The time of the 15-minute interval.
ERRORED SECONDS	The value of the errored seconds counter for the specified 15-minute interval (0 - 900 or N/A if data for the 15-minute interval is invalid).
BURSTY ERR SECS	The value of the bursty errored seconds counter for the specified 15-minute interval (0 - 900 or N/A if data for the 15-minute interval is invalid).

`SEVERELY ERR SECS`
The value of the severely errored seconds counter for the specified 15-minute interval (0 - 900 or N/A if data for the 15-minute interval is invalid).

`FAILED SECONDS`
The value of the failed seconds counter for the specified 15-minute interval (0 - 900 or N/A if data for the 15-minute interval is invalid).

`VALID INTERVAL`
This field indicates whether the data for the specified 15-minute interval is valid. Data is considered valid when a count for that 15-minute interval. If the field has a value of **y**, the data for the four error categories is valid; otherwise, the data is invalid.

Data is considered valid when a count for that 15-minute interval is retrieved and none of the following invalid conditions occur:

— If a system warm start or a system cold start occurred during the interval

— If the DS1 circuit pack was not inserted during the interval

— If the system time was changed during the interval

— If the system was too busy to respond to a poll request for the interval.

list measurements ip codec

list measurements ip codec x

Supports IP media processing resource measurements. The list measurements ip codec command works on IP Media Processor & Medpro.

Action/ Object	Qualifier	Qualifier Description	Default	Feature Interactions
list measurements ip codec	***hourly <region number>***	Lists the measurements for the last 24 hours, from current hour backwards, for the indicated region. If the switch clock is changed, the report shows stars as on R8. Examples: **Sample IP Codec Hourly Output For Region 4**	none	
	summary yesterday-peak summary today-peak summary last-hour	Lists the measurements for the previous day's peak, for all regions with MEDPRO resources administered on the ip-interfaces form. The peak hour in a given region is the hour at which [G.711 Usage (Erl) + G.711 Usage (Erl)] is a maximum for that region. If the switch clock is changed, the report shows stars as on R8.	none	
	detail <region number> yesterday-peak detail <region number> today-peak detail <region number> last-hour	Lists the measurements for the previous day's peak for the indicated region. If the switch clock is changed, the report shows stars as on R8.	none	

These measurements are displayed by software; the report output may span multiple IP Media Processor or Medpro boards. A single report output combines statistics from both IP Media Processor and Medpro boards. Codecs are considered as part of a common pool.

Output

The following example shows the IP Codec Hourly Output For Region 4.

```
list measurements ip codec hourly 4

Switch Name:                                  Date: 5:32 pm  WED MAR 26, 1992

                    IP CODEC RESOURCE HOURLY REPORT

                       G711                            G723/9
                    ---------------------      -------------------------
Meas         DSP    Usage   In Reg  Out of     Usage   In Reg  Out of
Hour Region  Rscs   (Erl)   peg     Reg peg    (Erl)   peg     Reg peg
0400 4       xxxx   xxxx.x  xxxxx   xxxxx      xxxx.x  xxxxx   xxxxx
0300 4       xxxx   xxxx.x  xxxxx   xxxxx      xxxx.x  xxxxx   xxxxx
0200 4       xxxx   xxxx.x  xxxxx   xxxxx      xxxx.x  xxxxx   xxxxx
0100 4       xxxx   xxxx.x  xxxxx   xxxxx      xxxx.x  xxxxx   xxxxx
0000 4       xxxx   xxxx.x  xxxxx   xxxxx      xxxx.x  xxxxx   xxxxx
2300 4       xxxx   xxxx.x  xxxxx   xxxxx      xxxx.x  xxxxx   xxxxx
2200 4       xxxx   xxxx.x  xxxxx   xxxxx      xxxx.x  xxxxx   xxxxx
```

Field descriptions

`Meas Hour` The hour the measurement was taken. Switches in multiple time zones are treated as in the current MMI reports. We do not assume that there is a correlation between LAN regions and time zones.
Range: 0000 - 2300.

`Region` The network region that the IP Media Processors and Medpros for this measurement are in. Range: 1-44.

`DSP Rscs` Total IP codec resources (voice channels) in the region. (22 or 31) * # Medpro + 64 * #IP Media Processors. The 22 or 31 multiplier for Medpro depends on admin of codec preferences. A G711 call takes 1 resource, while a G723/729 call or a Fax relay call takes 2 resources. Range: 0-9999.

`G.711 Usage (ERL)` Usage in Erlangs of G.711 codecs during the measurement interval. Includes time that the voice channels are on a call. Use is measured from the time the voice channel is allocated until it is released. Calculated by:

(Total Call Seconds) / 3600 where Total Call Seconds is a sum of the following:

total time (in seconds) that a G.711 resource on a Medpro is in use

total time (in seconds) that a G.711 resource on an IP Media Processor is in use r

Range: 0-9999.

`G.711 In Reg Peg` Total number of times an IP media processor port in the region was allocated to a G.711 call. Range: 0-65535.

`G.711 Out of Reg peg`	The total number of times an IP media processor port was needed in the region for a G.711 call, but was successfully allocated to a resource in another region. Out of Region does not include denials. If “Network regions are interconnected” is “n”, then Out of Region is 0. Range: 0-65535.
`G.723/9 Usage (ERL)`	Usage in Erlangs of G.723 or G.729 codecs during the measurement interval. Includes time that the voice channels are on a call. Use is measured from the time the voice channel is allocated until it is released. Calculated by: (Total Call Seconds) / 3600 where Total Call Seconds is a sum of the following: total time (in seconds) that a G.723 or G.729 resource on a Medpro is in use twice the total time (in seconds) that a G.723 or G.729 resource on an IP Media Processor is in use Range: 0-9999.
`G.723/9 In Reg peg`	Total number of times an IP media processor port in the region was allocated to a G.723 or G.729 call. Range: 0-65535.
`G.723/9 Out of Reg peg`	The total number of times an IP media processor port was needed in the region for a G.723 or G.729 call, but was successfully allocated to a resource in another region. Out of Region does not include denials. If “Network regions are interconnected” is “n”, then Out of Region is 0. Range: 0-65535.

Services personnel who wish to estimate the amount of IP traffic used on IP trunks versus IP stations can compare the above report with the lines of the list measurements trunk-group and list performance trunk-group, and list measurements outage-trunk and monitor traffic trunk-groups reports which correspond to IP trunk groups. Note that it is required that the switch does not have mixed IP and non-IP ports in a single trunk group.

The following screen shows Measurements IP CODEC yesterday-peak - Page 1.

```
list measurements ip codec summary yesterday-peak   Page   1

Switch Name:                                   Date: 5:27 pm  WED MAR 26, 1992

          IP CODEC RESOURCE SUMMARY REPORT

                        G711                          G723/9
                     ---------------------      -------------------------
Meas          DSP    Usage   In Reg  Out of     Usage   In Reg  Out of
Hour Region   Rscs   (Erl)   peg     Reg peg    (Erl)   peg     Reg peg
0400 1        xxxx   xxxx.x  xxxxx   xxxxx      xxxx.x  xxxxx   xxxxx
0300 2        xxxx   xxxx.x  xxxxx   xxxxx      xxxx.x  xxxxx   xxxxx
0600 44       xxxx   xxxx.x  xxxxx   xxxxx      xxxx.x  xxxxx   xxxxx


Command successfully completed
```

The reports list measurements ip codec summary today-peak and list measurements ip codec summary last-hour are similar to the above report.

The following screen shows the Sample IP Codec detail yesterday-peak Output For Region 4.

```
list measurements ip codec detail 4 yesterday-peak 4

Switch Name:                                  Date: 5:32 pm  WED MAR 26, 1992

                    IP CODEC RESOURCE DETAIL REPORT

                       G711                           G723/9
                    ---------------------      -------------------------
Meas         DSP    Usage   In Reg  Out of     Usage   In Reg  Out of
Hour Region  Rscs   (Erl)   peg     Reg peg    (Erl)   peg     Reg peg
0400 4       xxxx   xxxx.x  xxxxx   xxxxx      xxxx.x  xxxxx   xxxxx
```

Services personnel who wish to estimate the amount of IP traffic used on IP trunks versus IP stations can compare the above report with the lines of the list measurements trunk-group and list performance trunk-group and list measurements outage-trunk and monitor traffic trunk-groups reports which correspond to IP trunk groups. Note that it is required that the switch does not have mixed IP and non-IP ports in a single trunk group.

list measurements ip dsp-resource

list measurements ip dsp-resource x

Supports IP media processing resource measurements. The list measurements ip codec command works on IP Media Processor & Medpro.

Action/ Object	Qualifier	Qualifier Description	Default	Feature Interactions
list measurements ip dsp-resource	***hourly***	Lists the measurements for the last 24 hours, from current hour backwards, for the indicated region. If the switch clock is changed, the report shows stars, as do other reports on R8. Examples: **command x**	none	
	summary yesterday-peak summary today-peak summary last-hour	Lists the measurements for the previous days peak DSP Usage (Erl) for all regions with resources of type MEDPRO administered on the ip-interfaces form. The peak hour in a given region is the hour at which DSP Usage (Erl) is a maximum for that region. If the switch clock is changed, the report shows stars as on R8.	none	
	detail <region number> yesterday-peak detail <region number> today-peak detail <region number> last-hour	Lists the measurements for the previous days peak for the indicated region. If the switch clock is changed, the report shows stars as do other reports on R8.	none	

These measurements are displayed by software; the report output may span multiple IP Media Processor or Medpro boards. A single report output combines statistics from both IP Media Processor and Medpro boards. Codecs are considered as part of a common pool.

Output

The following example shows the dsp-resource Hourly Output For Region 4.

```
list measurements ip dsp-resource hourly 4

Switch Name:                                  Date: 5:32 pm  WED MAR 26, 1992

                        IP DSP RESOURCE HOURLY REPORT

Meas          DSP     DSP Usage   In Reg   Out of    Denied   %      % Out
Hour Region   Rscs    (Erl)       Peg      Reg Peg   Peg      Blk    of Srv
0400 4        xxxx    xxxx.x      xxxxx    xxxxx     xxxxx   xx.xx   xx.xx
0300 4        xxxx    xxxx.x      xxxxx    xxxxx     xxxxx   xx.xx   xx.xx
0200 4        xxxx    xxxx.x      xxxxx    xxxxx     xxxxx   xx.xx   xx.xx
0100 4        xxxx    xxxx.x      xxxxx    xxxxx     xxxxx   xx.xx   xx.xx
0000 4        xxxx    xxxx.x      xxxxx    xxxxx     xxxxx   xx.xx   xx.xx
2300 4        xxxx    xxxx.x      xxxxx    xxxxx     xxxxx   xx.xx   xx.xx
2200 4        xxxx    xxxx.x      xxxxx    xxxxx     xxxxx   xx.xx   xx.xx
2100 4        xxxx    xxxx.x      xxxxx    xxxxx     xxxxx   xx.xx   xx.xx
2000 4        xxxx    xxxx.x      xxxxx    xxxxx     xxxxx   xx.xx   xx.xx
```

Field descriptions

`Meas Hour` The hour the measurement was taken. Switches in multiple time zones are treated as in the current MMI reports. We do not assume that the customer has made any correlation between LAN regions and time zones. Range: 0000 - 2300.

`Region` The network region that the IP Media Processors and Medpros for this measurement are in. (The increase to 44 regions is required by [75101-2].) Range: 1-44.

`DSP Rscs` Total IP codec resources (voice channels) in the region. (22 or 31) * # Medpro + 64 * #IP Media Processors. The 22 or 31 multiplier for Medpro depends on admin of codec preferences. A G711 call takes 1 resource, while a G723/729 call or a Fax relay call takes 2 resources. Range: 0-9999.

`DSP Usage (ERL)` Usage in Erlangs of all codecs during the measurement interval. Includes time that the voice channels are on a call. Use is measured from the time the voice channel is allocated until it is released. Calculated by:

- (Total Call Seconds) / 3600 where Total Call Seconds is a sum of the following:
- total time (in seconds) that any CODEC resource on a Medpro is in use
- total time (in seconds) that a G.711 resource on an IP Media Processor is in use
- twice the total time (in seconds) that a G.723 or G.729 resource on an IP Media Processor is in use. Range: 0-9999.

In Reg peg	Total number of times an IP media processor port in the region was allocated to a call. Range: 0-65535.
Out of Reg peg	The total number of times an IP media processor port was needed in the region for a call, but was successfully allocated to a resource in another region. Out of Region does not include denials. If “Network regions are interconnected?” is “n(o)”, then Out of Region will always be 0. Range: 0-65535.
Denied Peg	The total number of times an IP media processor port was needed in the region for a call but could not be allocated in this region nor any other region because all IP media processor ports were busy, resulting in the call not being able to go through. Range: 0-65535.
% Blk	The percent of attempted allocations of IP media processor ports in the region that are blocked, i.e., not successful. Includes calls that are successfully allocated out of region and denied altogether. Range: 0-99.
% out of Srv	Percent of CCS time that any IP media processor ports were out of service, either manually busied out or maintenance busy, during the measured interval. Calculated by: (Total Time in CCS that any port was OOS / (Available Resources * 36)) * 100. Range: 0-99.

The following example shows the Measurements ip dsp-resource Summary - Page 1.

```
list measurements ip dsp-resource summary yesterday-peak   Page   1

Switch Name:                                  Date: 5:27 pm  WED MAR 26, 1992

                    IP DSP RESOURCE SUMMARY REPORT

Meas          DSP     DSP Usage   In Reg   Out of    Denied   %      % Out
Hour Region   Rscs    (Erl)       Peg      Reg Peg   Peg      Blk    of Srv

0400 1        xxxx    xxxx.x      xxxxx    xxxxx     xxxxx   xx.xx   xx.xx
0300 2        xxxx    xxxx.x      xxxxx    xxxxx     xxxxx   xx.xx   xx.xx
0600 44       xxxx    xxxx.x      xxxxx    xxxxx     xxxxx   xx.xx   xx.xx


Command successfully completed
```

The reports list measurements ip dsp-resource summary today-peak and list measurements ip dsp-resource summary last-hour are similar to the above report.

The following example shows the IP dsp-resource detail yesterday peak Output For Region 4.

```
list measurements ip dsp-resource detail 4 yesterday-peak 4

Switch Name:                                  Date: 5:32 pm  WED MAR 26, 1992

                    IP DSP RESOURCE DETAIL REPORT

Meas          DSP     DSP Usage   In Reg   Out of    Denied   %      % Out
Hour Region   Rscs    (Erl)       Peg      Reg Peg   Peg      Blk    of Srv

0600 4        xxxx    xxxx.x      xxxxx    xxxxx     xxxxx   xx.xx   xx.xx
```

list measurements ip-signaling-group

list measurements ip-signaling-group x

Shows the 10 worst signaling groups for each hour of today, starting with the most recent whole hour. The forms for the today and yesterday qualifiers are 24 pages, one for each hour. The groups for each hour will be rank-ordered from worst to least worst based on the Hour Average Latency.

Action/ Object	Qualifier	Qualifier Description	Logins	Defaults	Feature Interactions
list measurements ip-signaling-group	current-hour	Shows the 10 worst signaling groups for the current hour.			
	last-hour	Shows the 10 worst signaling groups for the last full hour.		none	
	today yesterday	Shows the 10 worst signaling groups for each hour of today, starting with the most recent whole hour, or yesterday.		none	

Output

The following example shows output for list measurements ip-signaling-group current-hour.

```
list measurements ip-signaling-group current-hour              Page 1 of 1 SPE A
Switch Name:                                       Date: 6:28 pm THU FEB 4, 1997
IP SIGNALING GROUPS LATENCY AND LOSS REPORT
CURRENT HOUR 10 WORST PERFORMING IP SIGNALING GROUPS
RANK ORDERED WORST TO LEAST WORST

Sig            Hour       Hour   Hour     Hour &   Interval   Interval Interval
Grp           Average   Packets Packets   Worst     Average   Packets  Packets
No  Region  Latency(ms)  Sent   % Lost   Interval Latency(ms)   Sent    % Lost
--- ------  ----------- ------- -------  -------- ----------- -------- --------
001   01       10000      xx     100%     18:03      10000       xx      100%
002   02       10000      xx     100%     18:06      10000       xx      100%
003   03       10000      xx     100%     18:09      10000       xx      100%
004   04       10000      xx     100%     18:12      10000       xx      100%
005   05       10000      xx     100%     18:15      10000       xx      100%
006   06       10000      xx     100%     18:18      10000       xx      100%
007   07       10000      xx     100%     18:21      10000       xx      100%
008   08       10000      xx     100%     18:24      10000       xx      100%
009   09       10000      xx     100%     18:27      10000       xx      100%
010   10       10000      xx     100%     18:30      10000       xx      100%

Command successfully completed
```

The following example shows the list measurements ip-signaling-group last-hour command.

```
list measurements ip-signaling-group last-hour                Page 1 of 24 SPE A
Switch Name:                                        Date: 6:28 pm THU FEB 4, 1997
IP SIGNALING GROUPS LATENCY AND LOSS REPORT
LAST FULL HOUR 10 WORST PERFORMING IP SIGNALING GROUPS
RANK ORDERED WORST TO LEAST WORST

Sig            Hour       Hour   Hour     Hour &   Interval   Interval Interval
Grp           Average   Packets Packets   Worst     Average   Packets  Packets
No  Region  Latency(ms)  Sent   % Lost   Interval Latency(ms)   Sent    % Lost
--- ------  ----------- ------- -------  -------- ----------- -------- --------
001   01       10000      xx     100%     18:03      10000       xx      100%
002   02       10000      xx     100%     18:06      10000       xx      100%
003   03       10000      xx     100%     18:09      10000       xx      100%
004   04       10000      xx     100%     18:12      10000       xx      100%
005   05       10000      xx     100%     18:15      10000       xx      100%
006   06       10000      xx     100%     18:18      10000       xx      100%
007   07       10000      xx     100%     18:21      10000       xx      100%
008   08       10000      xx     100%     18:24      10000       xx      100%
009   09       10000      xx     100%     18:27      10000       xx      100%
010   10       10000      xx     100%     18:30      10000       xx      100%

Command successfully completed
```

The following example shows the list measurements ip-signaling-group today command. (The yesterday form has exactly the same layout and content type as the today form but the information applies to the previous day's 24 hours.)

```
list measurements ip-signaling-group today                    Page 1 of 24 SPE A
Switch Name:                                        Date: 6:28 pm THU FEB 4, 1997
IP SIGNALING GROUPS LATENCY AND LOSS REPORT
TODAY'S 10 WORST PERFORMING IP SIGNALING GROUPS PER HOUR
RANK ORDERED WORST TO LEAST WORST FOR EACH HOUR

Sig            Hour       Hour   Hour     Hour &   Interval   Interval Interval
Grp           Average   Packets Packets   Worst     Average   Packets  Packets
No  Region  Latency(ms)  Sent   % Lost   Interval Latency(ms)   Sent    % Lost
--- ------  ----------- ------- -------  -------- ----------- -------- --------
001   01       10000      xx     100%     18:03      10000       xx      100%
002   02       10000      xx     100%     18:06      10000       xx      100%
003   03       10000      xx     100%     18:09      10000       xx      100%
004   04       10000      xx     100%     18:12      10000       xx      100%
005   05       10000      xx     100%     18:15      10000       xx      100%
006   06       10000      xx     100%     18:18      10000       xx      100%
007   07       10000      xx     100%     18:21      10000       xx      100%
008   08       10000      xx     100%     18:24      10000       xx      100%
009   09       10000      xx     100%     18:27      10000       xx      100%
010   10       10000      xx     100%     18:30      10000       xx      100%

Command successfully completed
```

Field descriptions

`Sig Grp No`	The group number, rank ordered.
`Region`	The network region of the group.
`Hour Average Latency (ms)`	The average latency for the whole hour.
`Hour Packets Sent`	The number of packets sent during the whole hour.
`Hour Packets% Lost`	The percent lost packets for the whole hour (if 100% the corresponding latency is shown as ****).
`Hour & Worst Interval`	The hour and worst 3 minute interval within the hour. (The interval is identified by the last minute of the interval.)
`Interval Average Latency (ms)`	The average latency for the interval.
`Interval Packets Sent`	The number of packets sent during the interval.
`Interval Packets % Lost`	The percent lost packets for the interval (if 100%, the corresponding latency is shown as *****).

list mst

This command displays the messages in the trace buffer and can be used when the trace is disabled or active, but if active, older messages may be sporadically omitted if wraparound is selected and the message rate is high. The command can be used repeatedly without destroying the integrity of the buffer.

Action/ Object	Qualifier	Qualifier Description	Logins	Defaults	Feature Interactions
list mst	***from message number***	Message number to start the display; if the number is not in the buffer, then that is indicated on the display, and no additional messages are displayed. Omitting this qualifier causes messages to be displayed starting with the oldest FIFO and continuous messages.	init inads	FIFO order	See system printer documentation.
	count number	Message count; can be used to limit the trace			

Action/ Object	Qualifier	Qualifier Description	Logins	Defaults	Feature Interactions
	continuous	Display updates as new messages enter the trace buffer (FIFO). This option is most useful in conjunction with “auto-page.” The command terminates only when canceled by the user.			
	LIFO	Newest message displayed first.			
	FIFO	Messages displayed in the order received.			
	[auto-page]	The screen will automatically page when full. Used in combination with ***continuous*** (above), provides a way to “watch” as messages arrive.			
	print	Report sent to printer.			
	schedule	Command is validated and then a scheduling form displays to schedule execution of the command. The command is then placed in the command queue and is executed at the specified time. The information displayed by the command is sent to the system printer instead of the screen.[1] Examples: **list mst continuous** **list mst continuous auto-page** **list mst LIFO** **list mst from 222 count 7**			

1 Refer to the Report Scheduler and System Printer feature specification for more details.

Output

```
list mst
                  MST DATA

 Number  Date/Time   Type  Message
   1   12/21/90
       14:30:21.220  62  00 00 74 17 08 02 00 11 05 04 03 80 90 a2 18
                         03 a1 83 86 70 01 80 96 28 0d 73 74 61 74 69
                         6f 6e 20 35 31 30 30 31
   2   14:30:22.420  60  00 00 74 17 08 02 80 11 02 18 03 a9 83 86
   3   14:30:23.420  60  00 00 74 17 08 02 80 11 03 1e 02 81 81
   4   14:30:25.420  60  00 00 74 17 08 02 80 11 01
   5   14:30:25.820  60  00 00 74 17 08 02 80 11 07 96 28 0d 73 74 61
                         74 69 6f 6e 20 35 31 30 30 34
   6   14:30:28.020  62  00 00 74 17 08 02 00 11 0f
   7   14:50:25.820  71  01
   8   14:52:26.020  56  00 00 70 00 08 01 04 64 96 1c 13 91 a1 10 02
                         01 03 02 01 c4 40 08 96 49 05 83 31 30 30 b4
   9   14:52:26.020  57  00 00 70 00 08 01 84 64 96 1c 0d 91 a2 0a 02
                         01 03 30 05 02 01 c4 40 00

 Command Successfully Completed
```

Field descriptions

`Number`	The sequence number for the message.
`Date/Time`	The Date/Time.
`Type`	MST message type: 60 = ISDN uplink 62 = ISDN downlink, 6C = ISDN level 2 primitive
`Message`	Message text in hexadecimal (ISDN or X.25). See Table 8-4 for an explanation of the numeric codes.

Table 8-4. Summary of MST Message Types

Code	Description
0x10	Vector Trace message
0x11	Vector Event message
0x21	IMT proc_errs
0x22	IMT crec

Continued on next page

Table 8-4. Summary of MST Message Types — *Continued*

Code	Description
0x23	IMT miscellaneous hooks (dbug)
0x24	Hardware error log
0x25	PREC message
0x26	CMS outgoing (individual)
0x27	CMS incoming (individual)
0x30	CCMS uplink message
0x31	CCMS downlink message
0x32	Packet uplink message
0x33	Packet downlink message
0x40	IMT internal-message trace for call_p, conn_m, grp_m, serv_d, suser_m
0x50	ASAI level 2 primitive uplink
0x51	ASAI level 2 primitive downlink
0x52	ASAI maintenance uplink
0x53	ASAI maintenance downlink
0x54	ASAI unrecognized uplink
0x55	ASAI unrecognized downlink
0x56	ASAI association uplink
0x57	ASAI association downlink
0x58	ASAI error uplink
0x60	ISDNPRI uplink
0x62	ISDNPRI downlink
0x64	ISDNBRI uplink
0x66	ISDNBRI downlink
0x68	ISDNBRI level 2 primitive uplink
0x6A	ISDNBRI level 2 primitive downlink
0x6C	ISDNPRI level 2 primitive uplink
0x6D	ISDNPRI level 2 primitive downlink
0x6E	ISDNPRI unrecognized message
0x6F	ISDNBRI unrecognized message
0x71	GAP marker

Continued on next page

Table 8-4. Summary of MST Message Types — *Continued*

Code	Description
0x72	Time changed while trace enabled
0xA0	X.25 Outgoing application data message
0xA1	X.25 Incoming application data message
0xA2	X.25 Application error message
0xB0	X.25 Outgoing session layer control message
0xB1	X.25 Incoming session layer control message
0xCF	X.25 Message confirmation
0xD0	X.25 Outgoing processor channel control message
0xD1	X.25 Incoming processor channel control message
0xD2	X.25 Link control message
0xD3	X.25 Link status message
0xE2	X.25 Session Timer Expirations
0xF0	X.25 Error Message (Outgoing Message Lost)
0xF1	X.25 Unrecognized Messages
0xF2	X.25 Error Message (DIP ICOM Record Aborted) (R2 Only)
0xF9	Snapper instrumentation message
0xFA	Snapper continuation message (for large msgs)

Detailed description of Messages**

Note that the X.25 messages discussed below really follow the BX.25 Message Protocol.

The terminology Message[n] used below refers to the byte at offset n in the message being displayed.

MST message types contain a version number. Whenever the structure of the MST message changes, the version field in the MST buffer is changed. Version 1 displays a blank in the version field which is immediately after the MST message type field. Subsequent versions display the version number after the MST message type field and are connected with a hyphen (“-”). For example: Version 2 of the X.25 Application error/notification message has added the text of the pm state table stimulus which was ignored.

Version 1 of MST message type 0xA2 appears on the ‘list mst’ output:

```
Number  Date/Time     Type  Message
1       11:41:22:425  A2    17 10
```

Version 2 of MST message type 0xA2 appears on the list mst output:

```
Number  Date/Time     Type   Message
90      12:41:14:112  A2-02  17 10 21 03 32 05 01 80
```

Vector Trace

Message type: 0x10

Message format:

Message[1-4]	= call identifier (CID) (defined in $BASEPJ/hdrs/capro.h)
Message[5-6]	= vector number (defined in $BASEPJ/hdrs/dpm_calls.h)
Message[7]	= step number (defined in $BASEPJ/hdrs/callr.h)
Message[8]	= step type (defined in $BASEPJ/hdrs/dpm_calls.h)
Message[9]	= step state (defined in $BASEPJ/hdrs/dpm_calls.h)
Message[10-12]	= VDN
Message[13]	= port network number
Message[14]	= endpoint number
Message[15]	= angel number
Message[16]	= circuit number
Message[17-20]	= trunk number
Message[21+]	= auxiliary data (based on step type)

Vector Event Trace (D92 Only)

Message type:

0x11

Message format:

Message[1-4]	= cid (defined in $BASEPJ/hdrs/capro.h)
Message[5-6]	= event
Message[7+]	= auxiliary data (based on event)

Events are defined in $BASEPJ/hdrs/evnt_defs.h. Events based on the call_p will have the following auxiliary data:

Message[7-8]	= vector number
Message[9-10]	= step number

Events based on the grp_m will have the following auxiliary data:

Message[7-10]	= hunt group number

IMT (D92)

The messages described in this section cannot be controlled directly through any of the MST screens. They are enabled/disabled through TCM but their output goes to the MST buffer. See [IMT] for details on these messages.

A read-only field in the “change mst” screen, “Other Tracing?”, alerts the user that one or more of these types of messages is enabled.

0x21 - IMT proc_errs

Message format:

Message[1-4]	= process number(lname)
Message[5-8]	= sequence number (defined in *.p/hdrs/main_err.h, for example: $BASEPJ/gmtce.ss/hmm.p/hdrs/main_err.h)
Message[9-12]	= data 1
Message[13-17]	= data 2

0x22 - IMT crec

Message format:

Message[1+]	= call record (defined as CALLR typedef in $BASEPJ/hdrs/callr.h)

0x23 - MT_IMT (miscellaneous IMT hooks)

This message type is for miscellaneous IMT hooks. The only sub-type currently available is for a debug button (dbut). The button number is provided in the debug button MST message so that more than one button can be administered (through IMT) to convey different meanings. For example, depression of button N could signify the start of the problem symptoms, while depression of button N + X could signify the end of the problem symptoms. Note that the button number being logged represents the position of a button on a particular set type, and will be different depending on set type and module type. The mapping of the button number stored in the IMT_BUT_DEBUG MST message to a position on the set is not trivial, however, the debug buttons can be administered through TCM, debug button filtering enabled through TCM and MST enabled using the ‘enable mst’ command and the resultant messages sent to MST when each button is depressed can be examined for the button data and noted.

Message format:

Message[1]	= 0x01 (debug button sub-type, IMT_BUT_DEBUG)
Message[2-3]	= button number
Message[4-7]	= user id

0x40 - internal message tracing of call_p, conn_m, grp_m, serv_d, suser_m

Message formats: conn_m, grp_m, and suser_m:

Message[1-4]	= user identifier
Message[5-6]	= hook identifier (defined in $BASEPJ/hdrs/mstencode.h)
Message[7+]	= standard message (depends on hook type)

serv_d (map-type messages):

Table 8-5.

Message[1-4]	= user identifier
Message[5-6]	= hook identifier (defined in $BASEPJ/hdrs/mstencode.h)
Message[7]	= STIM type
Message[8-11]	= service identifier
Message[12]	= port network number
Message[13]	= endpoint number
Message[14]	= angel number
Message[15]	= circuit number
Message[16+]	= message

serv_d (other serv_d messages):

Message[1-4]	= user identifier
Message[5-6]	= hook identifier (defined in $BASEPJ/hdrs/mstencode.h)
Message[7]	= STIM type
Message[8-11]	= service identifier
Message[12-13]	= interpreted STIM
Message[14-17]	= aux data 0
Message[18-21]	= aux data 1
Message[22-25]	= aux data 2
Message[26-29]	= aux data 3
Message[30]	= hwtype field
Message[31]	= hwdata field

call_p:

Message[1-4]	= call identifier
Message[5-6]	= hook identifier (defined in $BASEPJ/hdrs/mstencode.h)
Message[7]	= supervisor
Message[8]	= digit prep
Message[9+]	= message

CCMS

Message types:

0x30 uplink
0x31 downlink

Message format:

Message[1]	= port network number
Message[2]	= endpoint number
Message[3]	= angel number
Message[4]	= circuit number
Message[5-6]	= hook identifier (defined in $BASEPJ/hdrs/mstencode.h)
Message[7]	= message length
Message[8]	= angel id
Message[9+]	= standard CCMS message

Packet (D92)

Message type:

0x32 uplink

Message format:

Message[1-4]	= user identifier
Message[5-6]	= hook identifier (defined in $BASEPJ/hdrs/mstencode.h)
Message[7-10]	= link identifier
Message[11-12]	= message type (defined in $BASEPJ/hdrs/pcd_calls.h)
Message[13+]	= standard packet message

Message type:

0x33 downlink

Message format:

Message[1]	= port network number
Message[2]	= endpoint number
Message[3]	= angel number
Message[4]	= circuit number
Message[5-6]	= hook identifier (defined in $BASEPJ/hdrs/mstencode.h)
Message[7-10]	= link identifier
Message[11+]	= standard packet message

ASAI

ASAI messages listed on the MST screen consist of a 4 octet header and a variable length body. The header contains the ASAI port address encoded with 8 hexadecimal digits. This same encoding is also used for BRI and PRI.

In message types other than 50 and 51 (Level 2 Primitives), following the port address is a one octet field called the qualifier. The meaning of the qualifier varies according to the type (as specified by the MST encode) of ASAI message traced. The body which is a real ASAI message (except for Level 2 Primitives) follows the qualifier.

When the display is administered for abbreviated format, the body contains only the initial part of the ASAI message (all information in beginning of message up to and including the Q.931 IE tag) plus the cause IE (if present).

0x50 - ASAI level 2 uplink primitive

Message[1] = Port Network Number of ASAI port

Message[2] = reserved

Message[3] = Carrier Address of ASAI port

Message[4] = Port number of ASAI port

Message[5] = SAPI

Message[6] = TEI

R1:

Message[7,8] = Link ID

Message[9] = Uplink encode
- 0x01 - ASAI Link State
- 0x02 - TEI Management Message
- 0x03 - XID Message

Message[10] = R1/R3 Link States:
- 0x00 - the link has gone down
- 0x01 - the link has come up
- 0x02 - the link id has changed
- 0x03 - the link has gone hyperactive
- 0x04 - the link has recovered
- 0x05 - the audit recovery stim
- 0x06 - the link has been reset
- 0x07 - link state hyper (too many SABMEs) disconnect
- 0x08 - broadcast link audit

= R1/R3 TEI Management Message
- 0x01 - Identity request
- 0x05 - Identity Check Response
- 0x07 - Identity Verify Request

= R1/R3 XID Messages
- 0x01 - XID Request
- 0x02 - XID Response

R3:

Message[7-10] = Link ID

Message[11] = Uplink encode
0x01 - ASAI Link State
0x02 - TEI Management Message
0x03 - XID Message

Message[12] = ASAI Link State:
0x00 - the link has gone down
0x01 - the link has come up
0x02 - the link id has changed
0x03 - the link has gone hyperactive
0x04 - the link has recovered
0x05 - the audit recovery stim
0x06 - the link has been reset
0x07 - link state hyper (too many SABMEs) disconnect
0x08 - broadcast link audit

= TEI Management Message
0x01 - Identity request
0x05 - Identity Check Response
0x07 - Identity Verify Request

= XID Messages
0x01 - XID Request
0x02 - XID Response

0x51 - ASAI level 2 downlink primitive

Message[1] = Port Network Number of ASAI port

Message[2] = Reserved

Message[3] = Carrier Address of ASAI port

Message[4] = Port number of ASAI port

Message[5] = SAPI

Message[6] = TEI

R1:

Message[7,8] = Link ID

NOTE:
The Link ID has no meaning for the link establish request, therefore the Link ID field will contain 0xff 0x.ff

Message[9] = Downlink encode
0x01 - ASAI Link Events
0x02 - TEI Management Message
0x03 - XID Message

Message[10] = ASAI Link Events:
0x02 - link release request
0x0f - link establish request sent to and received by the lower level

= TEI Management Message
0x02 - Identity Assigned
0x04 - Identity Check Request
0x06 - Identity Remove

= XID Messages
0x01 - XID Request
0x02 - XID Response

Message[11] = 0xCA - Cancel Byte

NOTE:
The cancel byte will only be present if the message was built, but could not be sent.

R3:

Message[7-10] = Link ID

NOTE:
The Link ID has no meaning for the link establish request, therefore the Link ID field will contain 0xff 0xff 0xff 0x.ff

Message[11] = Downlink encode
0x01 - ASAI Link Events
0x02 - TEI Management Message
0x03 - XID Message

Message[12] = ASAI Link Events:
0x02 - link release request
0x0f - link establish request sent to and received by the lower level

= TEI Management Message
0x02 - Identity Assigned
0x04 - Identity Check Request
0x06 - Identity Remove

= XID Messages
0x01 - XID Request
0x02 - XID Response

Message[13] = 0xCA - Cancel Byte

NOTE:
The cancel byte will only be present if the message was built, but could not be sent.

0x52 - ASAI maintenance uplink

Message[1] = Port Network Number of ASAI port

Message[2] = Reserved

Message[3] = Carrier Address of ASAI port

Message[4] = Port number of ASAI port

Message[5] = 0

Message[6+] = standard or abbreviated ASAI message format

0x53 - ASAI maintenance downlink

Message[1]	= Port Network Number of ASAI port
Message[2]	= Reserved
Message[3]	= Carrier Address of ASAI port
Message[4]	= Port number of ASAI 3 ort
Message[5]	= 0
Message[6+]	= standard or abbreviated ASAI message format

0x54 - ASAI unrecognized uplink

Message[1]	= Port Network Number of ASAI port
Message[2]	= Reserved
Message[3]	= Carrier Address of ASAI port
Message[4]	= Port number of ASAI port
Message[5]	= failure cause

Failure causes

0x2a (42.) - Overload Controls in Effect
0x32 (50.) - Requested Feature Not Administered
0x45 (69.) - Requested Feature Not Implemented
0x51 (81.) - Invalid CRV
0x5f (95.) - Invalid Message
0x60 (96.) - Mandatory Information Element Missing
0x61 (97.) - Message Non-Existent/Not Implemented
0x63 (99.) - Information Element non-existent
0x64 (100.) - Invalid Information Element Contents
0x6f (111.) - Protocol Error

Message[6+] = standard or abbreviated ASAI message format

NOTE:
An unrecognized message displayed in abbreviated format may be missing information (such as cause) because the message was not able to be parsed.

0x55 - ASAI unrecognized downlink

Message[1] = Port Network Number of ASAI port

Message[2] = Reserved

Message[3] = Carrier Address of ASAI port

Message[4] = Port number of ASAI port

Message[5] = failure reason

Failure reasons

1 - link flow controlled
2 - internal software error - see software error log
3 - packet interface problem - see error log

Message[6+] = standard or abbreviated ASAI message format

0x56 - ASAI association uplink

Message[1] = Port Network Number of ASAI port

Message[2] = Reserved

Message[3] = Carrier Address of ASAI port

Message[4] = Port number of ASAI port

Message[5] = association type

Association Type

0 - unknown
1 - call control
2 - domain control
3 - notification
4 - adjunct routing
5 - set value
6 - value query
7 - request feature

Message[6+] = standard or abbreviated ASAI message format

0x57 - ASAI Association downlink

Message[1]	= Port Network Number of ASAI port
Message[2]	= Reserved
Message[3]	= Carrier Address of ASAI port
Message[4]	= Port number of ASAI port
Message[5]	= association type
Message[6+]	= standard or abbreviated ASAI message format

0x58 - ASAI error uplink

Message[1]	= Port Network Number of ASAI port
Message[2]	= Reserved
Message[3]	= Carrier Address of ASAI port
Message[4]	= Port number of ASAI port
Message[5]	= failure cause

Failure causes

1 - 127 are code standard zero cause values
128 - 255 are code standard three cause values (+ 128)

Message[6+]	= standard or abbreviated ASAI message format

ISDN

0x60 - ISDN PRI uplink

Message[1]	= Port Network Number of D-channel port
Message[2]	= Reserved
Message[3]	= Carrier Address of D-channel port
Message[4]	= Port number of D-channel port
Message[5+]	= standard ISDNPRI format

NOTE:
In abbreviated format, the header of the Q.931 message, the cause IE (if present) and the channel id Information Element (IE) (if present) are the only IEs present.

0x62 - ISDN PRI downlink

Message[1]	= Port Network Number of D-channel port
Message[2]	= Reserved
Message[3]	= Carrier Address of D-channel port
Message[4]	= Port number of D-channel port
Message[5+]	= standard ISDNPRI format

NOTE:
In abbreviated format, the header of the Q.931 message, the cause IE (if present) and the channel id IE (if present) are the only IEs present.

0x64 - ISDN BRI uplink

Message[1] = Port Network Number of BRI port

Message[2] = Reserved

Message[3] = Carrier Address of BRI port

Message[4] = Port number of BRI port

Message[5] = SAPI

Message[6] = TEI

R1:

Message[7,8] = Link ID

Message[9+] = standard ISDNBRI format

R3:

Message[7-10] = Link ID

Message[11+] = standard ISDNBRI format

NOTE:
In abbreviated format, the header of the Q.931 message, the cause IE (if present) and the channel id Information Element (IE) (if present) are the only IEs present.

0x66 - ISDN BRI downlink

Message[1] = Port Network Number of BRI port

Message[2] = Reserved

Message[3] = Carrier Address of BRI port

Message[4] = Port number of BRI port

Message[5] = SAPI

Message[6] = TEI

R1:

Message[7,8] = Link ID

Message[9+] = standard ISDNBRI format

R3:

Message[7-10] = Link ID

Message[11+] = standard ISDNBRI format

NOTE:
In abbreviated format, the header of the Q.931 message, the cause IE (if present) and the channel id IE (if present) are the only IEs present.

An additional cancel byte (0xCA) may be present after the standard ISDNBRI formatted message if the message was not sent. The cancel byte will not be appended if the abbreviated format is selected.

0x68 - ISDN BRI level 2 uplink primitive

Message[1] = Port Network Number of BRI port

Message[2] = Reserved

Message[3] = Carrier Address of BRI port

Message[4] = Port number of BRI port

Message[5] = SAPI

Message[6] = TEI

R1:

Message[7,8] = Link ID

Message[9] = Uplink encode
0x01 - BRI Link State
0x02 - TEI Management Message
0x03 - XID Message

Message[10] = R1/R3 Link States:
0x00 - the link has gone down
0x01 - the link has come up
0x02 - the link id has changed
0x03 - the link has gone hyperactive
0x04 - the link has recovered
0x05 - the audit recovery stim
0x06 - the link has been reset
0x07 - link state hyper (too many SABMEs) disconnect
0x08 - broadcast link audit

= R1/R3 TEI Management Message
0x01 - Identity request
0x05 - Identity Check Response
0x07 - Identity Verify Request

= R1/R3 XID Messages
0x01 - XID Request
0x02 - XID Response

R3:

Message[7-10] = Link ID

Message[11] = Uplink encode
0x01 - BRI Link State
0x02 - TEI Management Message
0x03 - XID Message

Message[12] = BRI Link State:
0x00 - the link has gone down
0x01 - the link has come up
0x02 - the link id has changed
0x03 - the link has gone hyperactive
0x04 - the link has recovered
0x05 - the audit recovery stim
0x06 - the link has been reset
0x07 - link state hyper (too many SABMEs) disconnect
0x08 - broadcast link audit

= TEI Management Message
0x01 - Identity request
0x05 - Identity Check Response
0x07 - Identity Verify Request

= XID Messages
0x01 - XID Request
0x02 - XID Response

0x6A - ISDN BRI level 2 downlink primitive

Message[1] = Port Network Number of BRI port

Message[2] = Reserved

Message[3] = Carrier Address of BRI port

Message[4] = Port number of BRI port

Message[5] = SAPI

Message[6] = TEI

R1:

Message[7,8] = Link ID

NOTE:
The Link ID has no meaning for the link establish request, therefore the Link ID field will contain 0xff 0xff

Message[9] = Downlink encode
0x01 - BRI Link Events
0x02 - TEI Management Message
0x03 - XID Message

Message[10] = BRI Link Events:
0x02 - link release request
0x0f - link establish request sent to and received by the lower level

= TEI Management Message
0x02 - Identity Assigned
0x04 - Identity Check Request
0x06 - Identity Remove

= XID Messages
0x01 - XID Request
0x02 - XID Response

Message[11] = 0xCA - Cancel Byte

NOTE:
The cancel byte will only be present if the message was built, but could not be sent.

R3:

Message[7-10] = Link ID

NOTE:
The Link ID has no meaning for the link establish request, therefore the Link ID field will contain 0xff 0xff 0xff 0x.ff

Message[11] = Downlink encode
0x01 - BRI Link Events
0x02 - TEI Management Message
0x03 - XID Message

Message[12] = BRI Link Events:
0x02 - link release request
0x0f - link establish request sent to and received by the lower level

= TEI Management Message
0x02 - Identity Assigned
0x04 - Identity Check Request
0x06 - Identity Remove

= XID Messages
0x01 - XID Request
0x02 - XID Response

Message[13] = 0xCA - Cancel Byte

NOTE:
The cancel byte is present if the message was built, but could not be sent.

0x6C - ISDN PRI level 2 uplink primitive

Message[1] = Port Network Number of D-channel port

Message[2] = Reserved

Message[3] = Carrier Address of D-channel port

Message[4] = Port number of D-channel port

Message[5] = change type

R1/R3 change types:
0x01 - session up notification
0x02 - Session down notification
0x6D - ISDN PRI level 2 downlink primitive (not implemented)

Message[1] = Port Network Number of D-channel port

Message[2] = Reserved

Message[3] = Carrier Address of D-channel port

Message[4] = Port number of D-channel port

Message[5] = change type

R1/R3 change types:
0x01 - link establish request
0x02 - link release request

0x6E - ISDN PRI Unrecognized Messages

Message[1] = Port Network Number of D-channel port

Message[2] = Reserved

Message[3] = Carrier Address of D-channel port

Message[4] = Port number of D-channel port

Message[5] = type of failure

Types of failure:
0x01 - outgoing ISDNPRI
0x02 - incoming ISDNPRI

Message[6+] = standard ISDN format

0x6F - ISDN BRI Unrecognized Messages

Message[1] = Port Network Number of BRI port

Message[2] = Reserved

Message[3] = Carrier Address of BRI port

Message[4] = Port number of BRI port

Message[5] = SAPI

Message[6] = TEI

R1:

Message[7,8] = Link ID

Message[9] = type of failure

Types of failure:

0x01 - outgoing ISDN
0x02 - incoming ISDN

Message[10+] = standard ISDNBRI format

R3:

Message[7-10] = Link ID

Message[11] = type of failure

Types of failure:

0x01 - outgoing ISDN
0x02 - incoming ISDN

NOTE:
In abbreviated format, the header of the Q.931 message, the cause IE (if present) and the channel id IE (if present) are the only IEs present.

An additional cancel byte (0xCA) may be present after the standard ISDNBRI formatted message if the message was not sent. The cancel byte will not be appended if the abbreviated format is selected.

General

0x71 - GAP marker

Message[1] = GAP reason

Message[2] = GAP count (since last clear - high byte)

Message[3] = GAP count (since last clear - low byte)

GAP reasons:

0x01 - disabled, disable mst command executed
0x02 - disabled, mst timer expired
0x03 - disabled, buffer full on no-wrap
0x04 - disabled, restart occurred
0x05 - disabled, by stop trigger or count
0x06 - disabled, audit error
0x07 - not disabled, stopped by stop trigger or count

0x72 - Time changed while trace enabled

Message[1] = 0x00

Message[2] = timestamp indication

timestamp indication:

0x00 - MST timestamp is old time
0x01 - MST timestamp is new time

X.25 Application Data

The processor channel number is the R1/R3 term, and R2 calls it the port number. The processor channel number is equal to the Application port number in R1. In R3, the processor channel admin screen should be inspected to determine the mapping.

0xA0 - X.25 outgoing application message

Message[1]	= processor channel number
Message[2]	= sequence number
Message[3]	= buffer id
Message[4]	= 0x00
Message[5+]	= application message[1]

1 Application messages will contain the session layer data headers and the data.

In abbreviated mode, the application message is not saved.

0xA1 - X.25 incoming application message

Message[1]	= processor channel number
Message[2]	= sequence number
Message[3+]	= application message

In abbreviated mode, the application message is not saved.

Application Control

0xA2 - X.25 application error or notification

NOTE:
The ‘X.25 application error message’ category contains notifications as well as errors.

0xA2, 0xF0 and 0xF2 messages will be turned on by responding ‘y’ to the ‘Application Errors?’ field.

Version 1:

Message[1]	= processor channel number
Message[2]	= application error/notification

Version 2:

Message[1]	= processor channel number
Message[2]	= application error/notification
Message[3+]	= pm stimulus ignored (For message[2] == 0x10 only)

Errors/Notifications:

R1/R3:

0x01 - no outgoing buffer available
0x05 - pvc session down
0x06 - pvc session up
0x07 - pvc session connect
0x08 - pvc session restart
0x09 - message buffer overload uplink
0x0A - message buffer overload downlink
0x0B - message buffer exhaustion
0x0C - max # of outgoing msgs allowed
0x0D - bad msg type in message buffer routine
0x0E - no message buffers available
0x0F - message buffer pointer error
0x10 - pm state table stimulus ignored
0x11 - bad session connect message

Session Layer Control

NOTE:
The session layer header is considered part of the session layer message.

0xB0 - X.25 outgoing session layer control message

Message[1]	= processor channel number
Message[2]	= session layer message type
Message[3]	= buffer id
Message[4]	= 0
Message[5+]	= session layer message

session layer message type:

0x00 - session connect
0x01 - session accept
0x02 - session reject
0x03 - session disconnect
0x04 - reserved
0x05 - reserved
0x06 - resynch
0x07 - reserved
0x08 - resynch acknowledge

In abbreviated mode, the session layer message is not saved.

0xB1 - X.25 incoming session layer control message

Message[1]	= processor channel number
Message[2]	= session message type
Message[3+]	= session message

session message type:

0x00 - session connect
0x01 - session accept
0x02 - session reject
0x03 - session disconnect
0x04 - reserved
0x05 - reserved
0x06 - resynch
0x07 - reserved
0x08 - reserved

In abbreviated mode, the session layer message is not saved.

0xCF - message confirmation

This confirmation is X.25 far end confirmation.

Message[1]	= processor channel number
Message[2]	= internal buffer id
Message[3]	= count of outgoing buffers confirmed

Processor Channel Control

0xD0 - outgoing control message

Message[1] = processor channel number

Message[2] = message event

Message events for R1:

0x00 - Request Reset of Logical Channel
0x05 - Ack. Reset of Logical Channel
0x06 - Flow Control Uplink
0x07 - Release Uplink Flow Control
0x0A - Flow Control Downlink
0x0B - Release Downlink Flow Control

Message events for R3:

0x00 - Request Reset of Logical Channel
0x08 - Connect Processor Channel
0x09 - Disconnect Processor Channel
0xD1 - X.25 incoming control message

Message[1] = processor channel number

Message[2] = message event

R1 Message events:

0x01 - Performed Requested Reset of Logical Channel
0x06 - Resetting Logical Channel
0x0A - Level 3 Restart[1]

R3 Message events:

0x01 - Performed Requested Reset of Logical Channel
0x06 - Resetting Logical Channel
0x08 - processor channel connected
0x09 - processor channel disconnected

1. If this event occurs, one restart for each logical channel will be written into the MST trace.

Link Control

0xD2 - link control

Message[1] = interface link number

Message[2] = message event

R1 Message events:

0x00 - Busy Out Link
0x01 - Release Busied Out Link
0x0A - Level 3 Restarting

R3 Message events:

0x00 - Stop Link
0x01 - Start Link
0x0A - Level 3 Restarting

0xD3 - link status (R3 Only)

Message[1] = interface link number

Message[2] = message event

R3 Message events:

0x02 - Session Down
0x03 - Session Up

Session Sanity

0xE2 - X.25 Session Timer Expirations

Message[1] = processor channel number

Message[2] = timer

Timers:

0x00 - ST2(session connect)
0x01 - ST3(retransmission)

Message[3] = countdown from A1

0x02 - ST4(resynchronization)

No count

0x03 - ABT1(abort session 1)

Message[3] = protocol machine state where timeout occurred

0x04 - ABT2(abort session 2)

Message[3] = protocol machine state where timeout occurred

0x05 - State Timer

Message[3] = protocol machine state where timeout occurred

0x06 - Message Timer

Message[3] not used

Protocol Machine States:

BAD_STATE	0x00 /* 0 is very common, don't use as a state */
PT_UNALLOC	0x01 /* port is un-allocated */
QUIESCENT	0x02 /* quiescent - allocated but not used */
ENTER_wSA	0x03 /* entering wSA - reset issued, not ABT/CON */
W_ACCEPT	0x04 /* Waiting for Session Accept*/
DATA_XFER	0x05 /* Data Transfer State*/
DATA_RESYNC	0x06 /* Resynchronization state */
PRI_ALLOC	0x07 /* pri port allocated but not yet used */
PRI_CONN	0x08 /* pri port connected */
HIGH_STATE	0x08 /* Highest value a port state can be*/

X.25 Errors

0xF0 - X.25 Error Message (Outgoing Message Lost)

Note that 0xA2, 0xF0 and 0xF2 messages will be turned on by responding ‘y’ to the ‘Application Errors?’ field.

Version 1:

Message[1]	= processor channel number
Message[2]	= sequence number
Message[3+]	= message

Version 2:

Message[1]	= processor channel number
Message[2]	= sequence number
Message[3]	= reason code
Message[4+]	= message

Reason Codes:

```
0x00    /* message lost */
        /* 1 reserved */
0x02    /* message ignored, sequence number is within window but less
           * than expected
           */
0x03    /* message ignored, bad sequence number */
0x04    /* message ignored, other port has sent a disconnect message */
0x05    /* message ignored, send request is rejected*/
0x06    /* message ignored, from ig_l3 */
0x07    /* message ignored, from l3_err */
0x08    /* sequence number is within window but less
           * than expected (resync)
           */
0x09    /* bad sequence number (resync) */
```

In abbreviated mode, the application message is not saved.

0xF1 - Unrecognized X.25 Messages

Message[1] = processor channel number

Message[2] = Failure type

Message[3+] = session message

Failure types:

0x00 - Reserved
0x01 - Unknown session layer message type
0x02 - unrecognized control message

0xF2 - BX.25 Error Message (DIP ICOM Record Aborted)

R2 only

list registered-ip-stations

This command displays information about ip stations registered at a facility.

Action/ Object	Qualifier	Qualifier Description	Logins	Default	Feature Interactions
list registered-ip-stations	***none***	Example: **list registered-ip-stations**	init inads craft	none	none

Output

The following example shows the output from **list registered-ip-stations**.

```
list registered-ip-stations                                    Page   1 of   1

                     REGISTERED IP STATIONS

Station Ext

     2004
     2005
     2006
```

list skill-status

This command displays administration and status data about skilled hunt groups. The **list skill-status** command supports “start” and “count” command line options.

Action/ Object	Qualifier	Qualifier Description	Logins	Defaults	Feature Interactions
list skills-status	***xx count yy***	xx is a hunt group number yy is the number of hunt groups to be displayed Example: **list skill-status 11 count 6**	init inads craft	none	none

The following table displays data for each skilled hunt group:

Table 8-6. Skilled Hunt Group data

Group Number	Group Name	Group Extension	Group Type
Service Level Supervisor	Call Selection Override	Activate on Oldest Call Waiting	Dynamic Threshold Adjustment
Dynamic Percent Adjustment	Dynamic Queue Position	Service Objective	Weighted Service Level (status)
Service Level Target (percentage and time)	Level 1 Threshold	Adjusted Level 1 Threshold (status)	Level 2 Threshold
Adjusted Level 2 Threshold (status)	SLS State (status)	Expected Wait Time (status)	Time in Queue of Call at Head of Queue (status)

Output

The following example shows the output of **list skill-status** for three PAD skills with the Dynamic Percentage Adjustment enhancement enabled.

```
list skill-status

                                 SKILL STATUS

    Grp           S C O D D D
Grp Name/ Grp     L S C T P Q      Service      Level 1   Level 2
No. Ext   Type    S O W A A P SO   Level        Threshold Threshold S  EWT    OCW

1   General Inquiries English
    3001  pad     n       y n 20   70 /70 20        /         /        0       0
1   General Inquiries Spanish
    3002  pad     n       y n 20   70 /70 20        /         /        0       0
1   High Value Customers
    3003  pad     n       y n 20   80 /80 20        /         /        0       0
```

The following shows the output of **list skill-status** for six skills administered with a mixture of CentreVu Advocate and CentreVu Advocate Advisor features. The use of the start and count command line options is also shown. Skills 11 and 12 use UCD-LOA and the Service Level Supervisor feature with the Activate on Oldest Call Waiting and Dynamic Threshold Adjustment options enabled. Skill 21 uses the Dynamic Queue Position feature. Skills 31, 32, and 33 use EAD-LOA and the Service Objective feature with a different service objective administered for each skill.

```
list skill-status

                                 SKILL STATUS

    Grp           S C O D D D
Grp Name/ Grp     L S C T P Q      Service      Level 1   Level 2
No. Ext   Type    S O W A A P SO   Level        Threshold Threshold S  EWT    OCW

1   General Inquiries English
    3001  pad     n       y n 20   70 /70 20        /         /        0       0
1   General Inquiries Spanish
    3002  pad     n       y n 20   70 /70 20        /         /        0       0
1   High Value Customers
    3003  pad     n       y n 20   80 /80 20        /         /        0       0
```

Note that in both of these examples, **list skill-status** was executed before any traffic was offered to the skills. Therefore, the weighted service level is equal to the percentage component of the service level target and the adjusted level 1 and level 2 thresholds are equal to the administered level 1 and level 2 thresholds.

list station

- list station
- list station movable - shows extensions that have the Automatic Moves field set to always or once
- list station movable once - shows extensions available to be moved once
- list station movable done - shows extensions that had the Automatic Moves field set to once, and have moved
- list station movable always - shows extensions available for moves anytime
- list station movable error- shows mis-administered, non-serialized extensions
- list station movable no - shows extensions not available to be moved

```
list station movable

                                        STATIONS

       Port/     Name/                     Room     Data   Cv1/  COR/     Cable/
Ext    Type      Hunt-to                   Move     Ext    Cv2   COS  TN  Jack

1001   01A0301   Digital a0301                               1    1
       6402D                               always                    1
```

list suspend-alm-orig

This command lists active entries in the Suspend Alarm Origination table. Even though this command only lists active entries, an entry that expires during the list process still appears in the output. If the Suspend Alarm Origination table is empty, the output contain only the title and field headings.

Action/ Object	Qualifier	Qualifier Description	Logins	Default	Feature Interactions
list suspend -alm-org	***print***	Report sent to printer.	init inads craft	none	none
	schedule	Schedule execution of the command. The command is placed in the command queue and is executed at the specified time. The information displayed by the command is sent to the system printer instead of the screen.[1] Examples: **list suspend-alm-orig** **list suspend-alm-orig print** **list suspend-alm-orig schedule**			

1 Refer to the Report Scheduler and System Printer feature specification for more details.

Output

```
list suspend-alm-orig

                      Suspend Alarm Origination Entries

                    Physical   Board        Expires At

                    01C03      off-only     06/11/15:06
                    01E0407    on-and-off   06/11/17:26
                    01E0406    on-and-off   06/12/45:34
```

list testcalls

This command generates an Automatic Transmission Measurement System (ATMS) report. The ATMS allows the voice and data trunk facilities to be measured for satisfactory transmission performance. The performance of the trunks is evaluated according to measurements produced by a series of analog tests and are compared against user-defined threshold values. The purpose of the report is to provide measurement data to help determine the quality of trunk lines. The measurement report contains data on trunk signal loss, noise, singing return loss, and echo return loss.

The measurements are produced by a set of analog trunk tests. The tests are initiated by a maintenance demand test or by a set of scheduled tests. The largest portion of these measurements are generated through scheduled testing during system quiet hours (hours where the traffic volume is low). Each trunk test performed by the system stores the results in a database. The trunk measurements in this database reflect the state of each trunk at the time of its last test.

Action/ Object	Qualifiers/ Options	Qualifier/Option Description
list testcalls	***detail***	Detailed measurement report displayed
	summary	Summary measurement report displayed
	grp group number	Measurements for a specific trunk group displayed. When used with the ***to-grp*** option, this option is the starting trunk group in a range of user-specified trunk groups.
	to-grp group number	Measurements for all trunk groups from 1 to the specified “to-grp” trunk group are displayed. When used with the ***grp*** option, this option is the ending trunk group in a range of user-specified trunk groups.
	mem member number	Measurements for a specific trunk group member displayed. When used with the ***to-mem*** option, this option is the starting trunk group member in a range of user-specified trunk group members.
	to-mem member number	Measurements for all trunk group members from 1 to the specified “to-mem” trunk group member displayed. When used with the ***mem*** option, this option is the ending trunk group member in a range of user-specified trunk group members.
	port location	Measurements for a specific trunk circuit (port) displayed
	result result identifier	Filter out all measurement results that do match the user-specified result, that is, only measurement results match the user specified result are displayed. Examples are pass, marg, fail, etc.
	not-result result identifier	Filter out all measurement results that do match the user-specified result, that is, only measurement results that do not match the user specified result are displayed. Examples are pass, marg, fail, etc.

Action/ Object	Qualifiers/ Options	Qualifier/Option Description
	count count number	Specify (limit) the number of records displayed.
	print	Report sent to printer
	schedule	Schedule execution of the command. The command is placed in the command queue and is executed at the specified time. The information displayed is sent to the system printer instead of the screen.[1]

1 Refer to the Report Scheduler and System Printer feature specification for more details.

Examples

list testcalls detail
list testcalls detail print
list testcalls detail grp 78
list testcalls detail grp 78 result marg count 3 schedule
list testcalls detail grp 78 to-grp 80
list testcalls detail grp 78 to-grp 80 mem 1 print
list testcalls detail grp 78 to-grp 80 mem 1 not-result pass
list testcalls detail grp 78 to-grp 80 mem 1 count 2 schedule
list testcalls detail grp 78 to-grp 80 mem 1 to-mem 5
list testcalls detail grp 78 to-grp 80 mem 1 to-mem 5 count 3 print
list testcalls detail grp 78 to-grp 80 mem 1 to-mem 5 count 3 result pass
list testcalls detail mem 1 count 3 result pass
list testcalls detail to-grp 78 to-mem 4 count 3 result pass
list testcalls detail to-mem 3 result pass
list testcalls detail port 1c1504
list testcalls detail port 1c1504 count 5 schedule
list testcalls detail port 1c1504 count 5 not-result marg print
list testcalls summary
list testcalls summary grp 78
list testcalls summary grp 78 print
list testcalls summary grp 78 count 5
list testcalls summary grp 78 count 5 schedule
list testcalls summary grp 78 to-grp 80
list testcalls summary grp 78 to-grp 80 count 3
list testcalls summary to-grp 78
list testcalls summary to-grp 78 count 7 schedule

Output

The following example is of the output for **list testcalls detail grp 80**.

```
list testcalls detail grp 80                  Page   1   SPE A

                         ATMS MEASUREMENT REPORT

 Group: 80   Type: co     Vendor:           TTL Type: 105-w-rl

 THRESHOLD VALUES           Loss dev at

                     1004Hz-loss  404Hz 2804Hz C-msg C-ntch SRL SRL
                      Min   Max   -  +  -  +   Noise Noise  LO  HI   ERL
            Marginal   -2   21    9  9  9  9     55    74   0   0    0
        Unacceptable   -2   21    9  9  9  9     55    74   0   0    0
 Trk Test  Test  Test -16dBm  0dBm
 Mem Date  Time  Rslt  NE FE NE FE  NE FE NE FE  NE FE NE FE  NE FE NE FE  NE FE
 1
 2
 3
 4
 5
 6
 7
 8
 9
```

Detail report field descriptions

`Group`	The trunk group number selected.
`Type`	The trunk group type.
`Vendor`	The vendor of this trunk group.
`TTL Type`	The kind of test line for this trunk group.
`Threshold Values`	The list of marginal and unacceptable threshold values defined on the trunk group form.
	The following fields appear on the lower section of the form. Many of the column headings contain the abbreviations “FE” for far end and “NE” for near end. These abbreviations define which end took the measurements.
`Trk Mem`	The trunk member within the trunk group.
`Test Date`	The month and day this trunk was tested.
`Test Time`	The time of day this trunk was tested.
`Tst Rslt`	This field describes the results of the trunk transmission test.
`1004Hz-loss Min`	Far-to-near and near-to-far measurements of 1004-Hz loss from low-level tone.
`1004Hz-loss Max`	Far-to-near and near-to-far measurements of 1004-Hz loss at 0 dBm.

`Loss dev at 404Hz`	Transmission tests at low frequency. These tests measure a maximum positive and negative deviation of +9 and -9 dB from the 1004-Hz loss measurements.
`Loss dev at 2804Hz`	Transmission tests at high frequency. These tests measure a maximum positive and negative deviation of +9 and -9 dB from the 1004-Hz loss measurements.
`C-msg Noise`	Maximum noise interference (in dBrnC: decibels above reference noise, which is B(EQ)10 sup -12E(EQ) watts) terminating on a voice terminal within the voice-band frequency range (500 to 2500 Hz) between 15 and 55 dBrnC.
`C-ntch Noise`	Maximum signal-dependent noise interference on a line between 34 and 74 dBrnC.
`SRL-LO`	Singing return loss from 0 to 40 dB between the sum of the circuit (repeater) gains and the sum of the circuit losses. SRL-LO occurs most often in the frequency range of 200 to 500 Hz.
`SRL-HI`	Singing return loss from 0 to 40 dB between the sum of the circuit (repeater) gains on a circuit and the sum of the circuit losses. SRL-HI occurs most often in the frequency range of 2500 to 3200 Hz.
`ERL`	Echo return loss from 0 to 40 dB between the level of signal strength transmitted and the level of signal strength reflected. ERL occurs most often in the frequency range of 500 to 2500 Hz.

The following example is the output from **list testcalls summary grp 80**.

```
list testcalls summary grp 80                        SPE A

                        ATMS MEASUREMENT SUMMARY REPORT

                         Trunks  Trunks   Trunks
 Trk  Num   Last   Last  Passed  Failed   Failed    Trks Trks  Busied
 Grp  Of    Test   Test  Transm  Marginal Unaccept  In-  Not   Out
 Num  Trks  Date   Time   Test   Threshld Threshld  Use  Test  Trunks

 80   19                   0       0        0       0    19    19

Command successfully completed
```

Summary report field descriptions

`Trk Grp Num`	The trunk group number which is being summarized. Only outgoing or two-way analog trunks will be listed.
`Num Of Trks`	The total number of members per trunk group.
`Last Test Date`	The date of the oldest measurement in the trunk group.
`Last Test Time`	The time of the oldest measurement in the trunk group.
`Trunks Passed Transm Test`	The number of trunks that have passed the trunk transmission tests.

`Trunks Failed Marginal Threshld`	The number of trunks that failed a marginal threshold, but not an unacceptable threshold according to the threshold values defined on the trunk group form.
`Trunks Failed Unaccept Threshld`	This is taken from the unacceptable threshold administered on the Trunk group form.
`Trks In-Use`	The number of trunks that were in-use at the time of testing.
`Trks Not Test`	The number of trunks that were not tested due to error conditions.
`Busied Out Trunks`	The number of trunks that were busied out at the time. This could be due to hardware problems, incorrect threshold values, etc.

list trace

Use this command to troubleshoot misdirected calls, trunking/routing problems, and call denials. This command allows you to view the Virtual Path Identifier (VPI) and Virtual Channel Identifier (VCI) data, adding either of these qualifiers:

- list trace station
- list trace tac

Action/Object	Qualifier	Qualifier Description	Logins	Default	Feature Interactions
list trace	***station***	VPI.VCI data for a specific station	init inads craft customer		
	tac	VPI.VCI data for a specific trunk/member			

list trace station

Use this command to check the VPI.VCI data for a specified station (**list trace station *extension***). The command syntax for ATM-specific trace data is:

> **list trace station *xxxxx/a*** where ***xxxxx*** is the station number, and ***/a*** means that you are requesting ATM-specific data.

Screen 8-16 shows VPI.VCI data for a successful 2-party call setup. Use the Field descriptions (list trace) to interpret this report.

```
list trace station 52501/a                  Page 1 of 1   SPE B

                              LIST TRACE


   Time         Data

15:12:07      Calling party station    57405 cid 0x20
15:12:09      dial 52501
15:12:09      ring station 52501 cid 0x20
15:12:09      ATM setup PN01-0081 to PN03-0045
15:12:09      ATM setup PN03-0046 to PN01-0082
15:12:11      active station 52501 cid 0x20
15:12:22      idle station 57405 cid 0x20
```

Screen 8-16. List trace screen (list trace station)

list trace tac

Use this command to see the VPI.VCI data for a specified trunk. The command syntax for ATM-specific trace data is **list trace tac *xxx*/a**, where

- ***xxx*** is the trunk access code number.
- ***/*a** means that you are requesting ATM-specific data.

Field descriptions (list trace)

Time	The system time that the event in the data field occurred
Data	A description of the event:
	setup indicates a successful ATM setup
	fail indicates an unsuccessful ATM setup or the network released an SVC after setup
	rele(ase) DEFINITY has sent an SVC-release message (This is unlikely because the call being traced has already ended by the time the SVC-release message is sent.)
	add indicates that a party has been added to an SVC
	rej(ect) indicates a rejected ATM-EI add-party message
	drop indicates that DEFINITY sent an SVC drop-party message.
	save indicates that an SVC has been saved in the DEFINITY ATM cache
	reuse indicates that an SVC in the DEFINITY ATM cache has been reused

mark port

The **mark port** command marks faulty ports as defective to prevent their use in other administrative operations (for example, adding a data-module or station). Ports on any type of circuit pack may be marked except for installed circuit packs that are administered automatically (for example, Tone Detector, Tone Generator, Announcement, Speech Synthesizer, Call Classifier and Maintenance/Test circuit packs). If the port can be administered manually, and it is unassigned, the port is marked as faulty. The **clear port** command reactivates the port. The **list marked-ports command** displays marked ports in a list format. All marked port information is saved as part of translations.

Action/ Object	Qualifier	Qualifier Description	Logins	Defaults	Feature Interactions
mark port	***location***	Physical location: **PCSSpp** Examples: **mark port 1c0208** **mark port 2a1001**	init inads craft	none	none

monitor bcms

The **monitor bcms** command displays output for agents and splits and summarizes the bcms condition. This on-line status report automatically updates every 30 seconds (or by pressing the Update key) until the command is canceled by pressing the Cancel key. Three display options are available: skill, split, and system.

Action/Object	Qualifier	Qualifier Description	Logins	Defaults	Feature Interactions
monitor bcms	*split* *split number* system system number skill *skill number*	see below	init inads craft cust rcust bcms browse	none	none

Qualifier Description

split	Specifies that the command display status information for a specified split number (an ACD hunt group).
split number	The split's identity to the switch and BCMS; an ACD hunt group number (split number). This parameter is entered only when the "split" parameter is entered.
system	This specifies that the command display split queue status as well as cumulative split information for all the BCMS measured splits.
system number	ACD hunt group numbers (split numbers) separated by spaces and/or split number ranges separated by a hyphen ("-").
skill	This specifies that the command display status information for a specified skill number.
skill number	The skill's identity to the switch and BCMS; an ACD hunt group number (skill number). This parameter is entered only when the "skill" parameter is entered.

Output

The following examples shows the output from **monitor bcms system**.

```
monitor bcms system                        Page   1 of   1

                          BCMS SYSTEM STATUS

                       Date:   14:02 THU OCT 17 1991

                          AVG                    AVG                    AVG
          CALLS  OLDEST   ANSW  AVAIL   #     ABAND   #    AVG    AFTER
SPLIT      WAIT   CALL   SPEED  AGENT  ABAND   TIME   ACD   TALK   CALL
Service       3   1:03     :45    0      3      :30    20    2:30  1:25
Sales         5    :33     :15    0     11      :45    36    1:32   :35
```

Field descriptions

Date	The current date and time which is updated every 30 seconds or when the UPDATE key is pressed.
SPLIT	The name of the split being reported, if no name is administered then the split extension is displayed in the form “EXTxxxxx”. Splits are displayed in split number order. This field is translation data.
CALLS WAIT	The number of calls currently waiting in this split’s queue. If any of these calls are Direct Agent Calls, the field is preceded by an asterisk. This field is real-time status data.
OLDEST CALL	The amount of time that the oldest call has waited in queue. This field is real-time status data.
AVG ANSW SPEED	The average speed of answer for this split during the current period. This includes time in queue and time ringing at the agent’s voice terminal. Calls that intraflow (calls that overflow from one ACD split to another split) d not have queue time from previous splits included in the average. The calculation is Total Answer Time/Total Automatic Call Distribution (ACD) Calls. This field is measurement data and includes only those calls that have completed (terminated).
AVAIL AGENT	The number of agents in this split currently available to receive an Automatic Call Distribution (ACD) call from this split. This field is real-time status data.
# ABAND	The number of calls that have abandoned during the current period. This field is measurement data.
AVG ABAND TIME	The average time abandoned calls waited in queue before abandoning during the current period. The calculation is Total Abandon Time/Total Calls Abandoned. This field is measurement data and includes only those calls that have completed (terminated).
# ACD	The number of Automatic Call Distribution (ACD) calls handled by this split during the current period. This includes calls that intraflow into the split. This field is measurement data.
AVG TALK	The average talk time for Automatic Call Distribution (ACD) calls handled by this split during the current period. This does not include ring time at the agents’ voice terminal. The calculation is Total ACD Talk Time/Number of ACD Calls. This field is measurement data and includes only those calls that have completed (terminated).
AVG AFTER CALL	The average After Call Work (ACW) time for Automatic Call Distribution (ACD) calls handled by this split during the current period. ACD calls with no ACW time are included in the average. Time spent on direct incoming or outgoing calls while in ACW are not included in the average. The calculation is (Total ACW Time - Total ACW Incoming Time - Total ACW Outgoing Time)/Total ACD Calls. This field is measurement data and includes only those calls that have completed (terminated).

The second example shows the output from the **monitor bcms split 1** command.

```
monitor bcms split 1                    Page   1 of   1   SPE A


            BCMS SPLIT (AGENT) STATUS

     Split: 1
    Split Name: hunt group 1          Date:   9:02 TUE OCT 22 1991
 Calls Waiting:  0
   Oldest Call: 0:00
   0=Staffed   0=Avail   0=ACD   0=ACW   0=AUX   0=Extn    0=OtherSplit
 AGENT        EXT    STATE    TIME     ACD   EXTN IN  EXTN OUT
                                       CALLS   CALLS     CALLS
```

Field descriptions

Split	The number of the split requested. This field is translation data.
Split Name	The name of the split requested. If no name exists the split extension is displayed in the form “EXT xxxxx”. This field is translation data.
Date	The current date and time which is updated every 30 seconds or when the UPDATE key is pressed.
Calls Waiting	The number of calls currently waiting in this split’s queue. If any of these calls are Direct Agent Calls, the field is be preceded by an asterisk. This field is real-time status data.
Oldest Call	The time in minutes:seconds that the current oldest call has waited in this split’s queue. This field is real-time status data.
Staffed	The number of agents currently logged into this split. This field is real-time status data.
Avail	The number of agents currently available to receive an Automatic Call Distribution (ACD) call in this split. Agents are in either the Auto-in or Manual-in work modes and are not currently on a call. If the agent is on another split’s call or in After Call Work (ACW) for another split, this agent is not considered available and is not recorded here. This field is real-time status data.
ACD	The number of agents in this split currently on an Automatic Call Distribution (ACD) call for this split. This includes ACD calls that are being handled by this split that arrive as coverage from another split. This field also includes outbound calls (Outgoing Call Manager) that are distributed through the ACD. Note that if an agent puts an ACD call on hold, but does not enter another state (for example, the agent does not enter the AVAIL state), the agent is still seen as in the ACD state. This field is real-time status data.
ACW	The number of agents in this split currently in After Call Work (ACW) for this split. This field is real-time status data.

AUX	The number of agents in this split currently in AUX work for this split. If an agent is on another split's call or in After Call Work (ACW) for another split, this agent is not considered in AUX work and is not be recorded here. This field is real-time status data.
Extn	The number of agents in this split currently on non-ACD (Automatic Call Distribution) calls, either incoming or outgoing directly to or from their extensions. If the agents are also in After Call Work (ACW) or AUX they is recorded as Extn rather than ACW or AUX. This field is real-time status data.
OtherSplit	The number of agents in this split on another split's call or in After Call Work (ACW) for another split. Only used if agents belong to multiple splits. This field is real-time status data.
AGENT	The name of the agent associated with the extension. If no name exists this field is left blank. This field is translation data.
EXT	The extension of the agent. This field is translation data.
STATE	The current state of the agent for this split. This possible states are Avail, ACD, ACW, AUX, Extn In, Extn Out, OtherSplit, and Unstaff. If an agent is staffed, the agent must also be in one of the above states. This field is real-time status data.
TIME	The clock time that the agent entered the current state in hours:minutes. This field is real-time status data.
ACD CALLS	The number of Automatic Call Distribution (ACD) calls (inbound and outbound), that the agent has completed for this split during the current period (half hour or hour). The maximum number of calls is 255, and if this maximum is exceeded, 255 is displayed. This field is measurement data.
EXTN IN CALLS	The number of non-ACD (Automatic Call Distribution) calls that the agent has received (incoming) and completed during the current period. The maximum number of calls is 255, and if this maximum is exceeded, 255 is displayed. This field is measurement data.
EXTN OUT CALLS	The number of non-ACD (Automatic Call Distribution) calls that the agent has made (outgoing) and completed during the current period. The maximum number of calls is 255, and if this maximum is exceeded, 255 is displayed. This field is measurement data.

monitor health

Use **monitor health** to see the current system alarm summary, maintenance busy summary, user summary, critical system status, and cabinet status that are updated each minute.

Action/ Object	Qualifier	Qualifier Description	Logins	Default	Feature Interactions
monitor health			init inads craft cust nms browse	none	If standby SPE Emergency Transfer Select Switches change and handshakes are down, the displayed Emerg Trans field is incorrect until handshake reintializes. When the **monitor health** command terminates, users are logged off of the system.

Output

The following example is a display of **monitor system health**.

```
status health

ALARM SUMMARY                   CABINET STATUS
     Major:  0
     Minor:  9                 Emerg  Alarms
   Warning:  4            Cab Trans Mj Mn Wn PNC
                           1   off   0| 7| 0 up
BUSY-OUT SUMMARY           2   off   0| 0| 4 up
    Trunks:  0             3   n.a.  0| 2| 0 up
  Stations:  0             4   off   0| 0| 0 up/up
    Others:  0
PROCESSOR OCCUPANCY STATUS
Static:   3%     SM:   6%
    CP:  10%   Idle:  81%
CRITICAL SYSTEM STATUS
  Active SPE: A/auto
  Duplicated? SPE:n
   SPE Power: commercial
 Time Source: external                   9:33 TUE JAN 29 1991
    # Logins: 2       - Press CANCEL to quit -
```

Field descriptions

Major	The number of logged major alarms (0 – 200).
Minor	The number of logged minor alarms (0 – 200).
Warning	Number of warnings logged in the alarm file (0 – 200).
Trunks	Number of busied out maintenance trunks.
Stations	Number of busied out maintenance stations.
Others	Combined number of busied out maintenance objects excluding trunks and stations.
Static	Proportion of the CPU currently dedicated to high priority items. This percentage is rounded to the nearest integer, therefore 0 percent means that the occupancy is less than one half of a percent.
SM	Proportion of the CPU currently dedicated to system management or periodic and scheduled maintenance. If large amounts of periodic or scheduled maintenance testing performs, this occupancy percentage can be high without affecting service. This percentage is rounded to the nearest integer, therefore 0 percent means that the occupancy is less than one half of a percent.
CP	Proportion of the CPU currently dedicated to call processing. This occupancy has priority over SM and IDLE occupancy categories and takes processor time away from these occupancy categories, if needed. This percentage is rounded to the nearest integer, therefore 0 percent means that the occupancy is less than one half of a percent.
Idle	Proportion of the CPU currently available. This percentage is rounded to the nearest integer, therefore 0 percent means that the occupancy is less than one half of a percent.
Active SPE	A or B indicate the currently-active processor complex. When the active processor complex is locked on-line with lock switching on DUPINT, the “lock” option displays; otherwise, “auto” displays.
Duplicated	Duplication status of SPE components are indicated. y/n
SPE Power	Current power source for the processor complex. The normal state is “commercial”. When commercial power is unavailable, in-use battery backup is indicated with “backup”.
Time Source	Current timing source is displayed. The display values for this field vary according to timing sources selected. If the site administers the optional Stratum-3 hardware, “external” displays and “internal” displays when an internal source, such as a tone clock, is used. Primary and secondary timing sources must be administered when using the Stratum-4 option. “primary” = primary administered source is in use “secondary” = secondary administered source is in use “local” = neither the primary or secondary sources are in use.
# Logins	Number of current users.
Cab	Assigned cabinet number, 1 to the highest cabinet number in the system.

`Emerg Trans`	Current setting of the emergency transfer switch for each cabinet. Five options are available: auto-on (“auto+” or “a+”), auto-off (“auto-” or “a-”), “on”, “off”, and “n.a.”. If “auto+” or “auto-” option are enabled, emergency transfers automatically activate when cabinets fail (“+” indicates that emergency transfer is activated, while “-” indicates that emergency transfer is inactive). When “on” is displayed, emergency transfer automatically activates. The “off” option shows that cabinets cannot activate emergency transfers. In duplicated SPE systems, switch settings for both processors of the PPN (cabinet 1) display. In this case, “auto+” is abbreviated “a+”, “auto-” is d “a-”, and “off” is “of”. “on” does not changed. If “n.a.” displays, emergency transfer switch settings are not available.
`Mj`	Number of major alarms associated with the cabinet. * means > 99.
`Mn`	Number of minor alarms associated with the cabinet. * means > 99.
`Wn`	Number of warnings associated with the cabinet. * means > 99.
`PNC`	Displays current Port Network Connectivity (PNC) status for each port network within a cabinet. When multiple port networks exist within a cabinet, a slash separates Carriers A, B, and C (listed first) from Carriers D and E (up/up). Availability of the Expansion Archangel Link (EAL) determines the PNC status of a port network. “Up” denotes EAL availability. When the EAL is not available, then “dn” (down) displays.
`Time of Day`	Displays current time of day acquired from the system.

monitor security-violations

This command displays information about failed attempts to access the system, including the time of the violation, the login entered, and the port accessed during the failed login attempt. The system logs trunk group numbers, members, and extensions for remote access violations. The system logs remote and local invalid access attempts with a total of 16 entries maintained for each access type. This online status report automatically updates every 30 seconds until the command is canceled by pressing the CANCEL key.

Action/ Object	Qualifier	Qualifier Description	Logins	Defaults	Feature Interactions
monitor security-violations	***print***	Report sent to printer. Examples: **monitor security-violations** **monitor security-violations print**	init inads craft cust rcust bcms browse	none	none

Output

The following example is a display of the **monitor security-violations** command.

```
monitor security-violations                          SPE A

                     SECURITY VIOLATIONS STATUS

                        Date:   9:12 MON DEC 30 1991

   SYSTEM MANAGEMENT VIOLATIONS        REMOTE ACCESS VIOLATIONS

 Date   Time  Login  Port    Ext    Date   Time   TG No.   Mbr  Ext
 12/30  09:12 init   MGR1           12/30  12:42  80        1   1111
 12/30  09:12 init   MGR1
 12/30  09:12 init   MGR1
```

Field descriptions

`Date`	Current date and time.
`Date`	Date of the logged security violation, MM/DD (MM = month, DD = day).
`Time`	Time of the logged security violation shown as HH:MM (HH = the hour, MM = minute of the invalid access attempt).
`Login`	Login ID entered for the login violation attempt.
`Port`	Type of port used when login violation occurred.
`MGR1`	MGR1 represents a connection to a system SAT port. Connections are either hardwired or dialed-up.
`Ext`	Extension assigned to the data module that failed during “logging in” session. If a data module is not used, this field is blank.
`Date`	Date of the logged security violation, MM/DD (MM = month, DD = day).
`Time`	The time of the logged security violation, HH:MM (HH = hour, MM = minute).
`TG No.`	The trunk group number associated with the trunk from the failed remote access attempt (remote access violations only).
`Mbr`	The trunk group member number associated with the trunk from the failed remote access attempt (remote access violations only).
`Ext`	Extension that interfaces with remote access features (remote access violations only).

monitor system

The **monitor system view1 and view2 commands** summarize the system's condition. This on-line status report automatically updates every minute (or by pressing the UPDATE key) until the command is canceled by pressing the CANCEL key. For security reasons, cancel automatically logs off technicians.

Overall system status is available with either view option. "View1" displays attendant, maintenance, and traffic status. Attendant and maintenance status update every minute and traffic status updates hourly. "View2" displays all "view1" items, except hunt group measurements that are omitted from traffic status portions. These screens contain simplified high-level information about the system's health. The **monitor system conn** command displays connection's status in the connection manager process. Data is collected frequently in the connection manager for key information items used to create this report.

The single option is **monitor system conn** and its parameter is *pnn*. The command line parameter *pnn* indicates the desired 3 pnns.

Action/ Object	Qualifier	Qualifier Description	Logins	Default	Feature Interactions
monitor system	*view 1* *view 2 conn* *pnn ###* *pnn ###* *pnn ###*	see below Examples: **monitor system view1** **monitor system view2** **monitor system conn** **monitor system conn pnn 1 5 7**	init inads craft cust nms browse	none	none

Qualifier Description

view1	This screen displays attendant status, maintenance status, last hour's measurement of trunk groups, hunt groups, attendant groups, and the time of day.
view2	This screen displays view1 forms except the last hour's hunt group measurements.
conn	This option displays the connection monitor output for key information.
no options	Omitting "pnn # # #" displays the default configuration of Pnn's 1, 2 and 3.
pnn # # #	Entering "pnn # # #", where "#" is replaced by a pnn number from 1 to 3, displays data for specified pnns.

Output

Below are displays of **monitor system view 1** and **monitor system view 2**.

```
monitor system view1
                 ATTENDANT STATUS                  MAINTENANCE STATUS

                   Console no.                      # of alarms for trunks: 4
  Activated: 1 2 3 4 5 6                          # of alarms for stations: 2
                                                 # of alarms for other res: 1
Deactivated: 7 8                        First OSS number has been informed? n


                              TRAFFIC STATUS
                            Measurement Hour: 1800
            Trunk Group Measurement               Hunt groups Measurement
(4 grps with highest %time ATB)          (4 grps with highest # of qued calls)
    Grp no: 78                                  Grp no: 16
   Grp dir:                                   Calls qued: 2
Calls qued: 1                                 Calls aban: 1
 %Out blkg:                                         Attendant Group Measurement
 %Time ATB:                                   Calls qued: 1     Calls aban: 0

                                                     16:06 WED MAR 6 1996
                 - press CANCEL to quit -
```

```
monitor system view2
                 ATTENDANT STATUS                  MAINTENANCE STATUS

                   Console no.                      # of alarms for trunks: 4
  Activated: 1 2 3 4 5 6                          # of alarms for stations: 2
                                                 # of alarms for other res: 1
Deactivated: 7 8                        First OSS number has been informed? n


TRAFFIC STATUS  Measurement Hour: 1800
          Trunk Group Measurement
(4 grps with highest %time ATB)
    Grp no: 78
   Grp dir:
Calls qued: 1
 %Out blkg:
 %Time ATB:
          Attendant Group Measurement
Calls qued: 1     Calls aban: 0
                                                     16:08 WED MAR 6 1996
                 - press CANCEL to quit -
```

Field descriptions

`Console #`	A list of console numbers that are activated or deactivated.
`Activated:`	The attendant console is active. An attendant console activated if: ■ its handset/headset is plugged in ■ it is not busied out, and the system is in day service and the console is a day or day/night or principle console, or the system is in night service and the console is a night or day/night console.
`Deactivated:`	The attendant console is inactive. The attendant console deactivated if it does not meet activated conditions.
`# of alarms for trunks`	The number of existing minor and major trunk port alarms.
`# of alarms for other resources`	The number of existing minor and major alarms on all maintainable objects in the system, except trunks and stations.
`First OSS number has been informed?`	Questions if the first OSS telephone number reports and acknowledges alarms. If “Alarm Origination” is disabled or there are no active alarm, the field is “n”.
`Measurement Hour`	The starting time for taking measurements. For example, if the measurement hour is shown as 1800, traffic status data display is the time period from 6 PM to 7 PM. The measurement is taken hourly.
`Grp no`	A number between 1 and the maximum trunk or hunt group number.
`Grp dir`	Group direction: incoming, outgoing or two way.
`Calls qued`	Total calls that arrive and are placed in the trunk group queue.
`Calls aban`	Total abandoned calls by the caller.
`%Out blkg:`	The ratio of outgoing calls that are not carried (due to overload conditions) on a trunk group to outgoing calls offered.
`% Time ATB:`	The percentage of time within polling intervals that all trunks in the trunk group are unavailable for use.
`Time of day`	The current time of day acquired from the system.

The following example is a display of the **monitor system conn** command.

```
        Time Slot Status                  Bus Status
Pnn      Bus   State  *Idle Count   Pnn  Bus  State
 10       0   Maint     0           10    0  Avail
 10       1   Normal    233         10    1  Avail
 10       0   Maint     0           22    0  Avail
 10       1   Normal    233         22    1  Avail
 22       0   Maint     0            1    0  Avail
 22       1   Normal    233          1    1  Avail
 22       0   Maint     0
 22       1   Normal    233        *Callrate:  20
  1       0   Maint     0          *Interval:  60
  1       1   Normal    233      *Max_callrate:45
  1       0   Maint     0         *Next_hour:  70
  1       1   Normal    233
 tot_ts_req :0F24 0000 3CE2 ts_count :0010 0920 0200 Requests-TN748 TTRs :0014
 ts_denied  :0E46 3CE2 0000 ts_total :0000 0090 0028 Requests-TN748 CPTRs:0041
 tot_fts_req:0000 53D2 2231 fts_count:02E0 0910 0784 Requests-TN744 CPTRs:0082
                            fts_total:0320 0192 7048 Requests-TN744 TTRs :0082
                            Requests-TN744 MFCs :0082
Note: * Denotes Base 10, All Other Figures are in Base 16
```

Field descriptions

`Time Slot Status`	4 numbers are associated with time slot status for each specified pnn; the two buses (0 and 1) have a maintenance and a normal state, and a number of idle counts. These fields represent real-time status data.
`Bus Status`	Two numbers are associated with the two buses for each pnn. Shown are the pnn number, the associated bus (0 or 1), and the bus's state (avail or unavail). These fields represent real-time status data.
`Callrate`	Call rates currently executing on the switch. This counter is bumped for each call attempt. This field represents real-time status data.
`Interval`	The interval applied to the call rate. It is normally a 36 second time period. This field represents constant status data.
`Max_ callrate`	The maximum call rate achieved since the last hour. If, at 20 minutes past 12:00, the system executes this command, the maximum call rate obtained during the past 20 minutes appears. This field represents real-time status data.
`Next_hour`	Value of 0 or 1, related to measurements taken this hour or the next. This hour reflects maximum call rates. When this flag is set, statistics accumulate for the next hour and shortly thereafter.
`tot_ts_ req`	Total time slots in use during the time period elapsed since the top of the last hour. Data is collected every 100 seconds. When the timer fires and the data collection occurs, a check is made as to how many time slots are currently in use. Three numbers appear; one for each of the pnns requested. This field represents real-time status data.
`ts_denied`	Total time slots requests denied since the beginning of the last hour. Data is collected every 100 seconds. Three numbers appear; one for each requested pnn. This field represents real-time status data.

`tot_fts_req`	Total number of requested fiber time slots. This field increments each time a fiber time slots is allocated since the last top of the hour measurement polling. Three values appear; one for each requested pnn. This field represents real-time status data.
`ts_count`	Number of requests for time slots during the last 100 second interim. An internal timer initiates polling every 100 seconds. Three numbers appear, one for each requested pnn. This field represents real-time status data.
`ts_total`	Total number of time slots requested since the top of the last hour. This field represents real-time status data.
`fts_count`	Number of requests for fiber time slots during the last 100 second interim. An internal timer initiates polling every 100 seconds. Three numbers appear; one for each requested pnn. This field represents real-time status data.
`fts_total`	Total number of fiber time slots during the last 100 second interim. This field represents real-time status data.
`Requests-TN748 TTRs`	Total number of requested touch tone receivers that are currently-active. Decrements when tone receivers are freed, and increments when they are requested. This field applies to the TN748 board. This field represents real-time status data.
`Requests-TN748 CPTRs`	Total number of requested call progress tone receivers that are currently active. It decrements when call progress tone receivers are freed and increments when they are requested. This field applies to the TN748 board. This field represents real-time status data.
`Requests-TN744 CPTRs`	Total number of requested call progress tone receivers that are currently active. It decrements when call progress tone receivers are freed and increments when they are requested. This field applies to the TN744 board. This field represents real-time status data.
`Requests-TN744 TTRs`	Total number of requested touch tone receivers that are currently active. It decrements when tone receivers are freed and increments when they are requested. This field applies to the TN744 board. This field represents real-time status data.
`Requests-TN744 MFC`	Total number of requested multi-frequency receivers that are currently active. It decrements when multi-frequency receivers are freed and increments when they are requested. This field applies to the TN744 board. This field represents real-time status data.

monitor traffic

Use **monitor traffic** to see information on the number of trunk group and hunt group calls waiting to be serviced, and the time the oldest call in the group has been waiting for service.

Action/ Object	Qualifier	Qualifier Description	Logins	Default	Feature Interactions
monitor traffic	*trunk-groups* *hunt-groups*	see below Examples: **monitor traffic trunk-groups** **monitor traffic trunk-groups 4** **monitor traffic hunt-groups**	init inads craft cust rcust bcms browse	none	none

Qualifier Description

trunk-groups The number of trunk group calls waiting to be serviced, members in the group, and number of members that are active on calls in the group. This field displays up to 60 administered trunk groups. Technicians specify the starting trunk group. If technicians enter 5, the displayed trunks start at 5. Numbers 1-4 do not appear.

hunt-groups This field displays the waiting time for oldest call in each hunt group. Screen data updates every minute; only changed fields refresh. Unadministered hunt groups have blank values.

Output

The following output example is a display of **monitor traffic hunt-groups**.

```
monitor traffic hunt-groups

                 HUNT GROUP STATUS   22:49 SAT DEC 31 1988
      #   S   A   Q   W   LCIQ       #   S  A   Q   W  LCIQ
      1   15  10  10  0   20         17
      2                              18
      3                              19
      4                              20
      5                              21
      6                              22
      7                              23
      8                              24  10   5   0   0   10
      9                              25
      10                             26
      11                             27
      12                             28
      13                             29
      14                             30
      15                             31
      16                             32

 (#: Group;  S: Grp Size;  A: Active Members;  Q: Q Length;  W: Calls Waiting)

 (LCIQ: Longest Call In Queue in seconds)
```

Field descriptions

#	Group number for trunk group or hunt group.
S	Number of members administered for each trunk or hunt group.
A	Number of group members that are active on a call. This does not include busied out members.
Q	The length of queues administered for groups.
W	Number of calls waiting in group queues to be serviced.
LCIQ	The longest call in queue (LCIQ) indicates the time in seconds the oldest call in the hunt group queue has been waiting to be serviced.

```
monitor traffic trunk-groups

                 TRUNK GROUP STATUS   22:49 SAT DEC 311988
   #  S  A  Q  W  #  S  A  Q  W  #  S  A  Q  W  #  S  A  Q  W
   1  15 10 0  0
   2  22 21 10 10
   9  31 12 20 0
   65 5  5  10 8
   99 12 0  0  0

 (#: Group;  S: Grp Size;  A: Active Members;  Q: Q Length;  W: Calls Waiting)
```

monitor trunk

This command displays internal software status information. This command helps to locate facilities to which the trunk is communicating.

If a trunk group number is entered without a member number, and with or without "/", it is member 1. If a trunk group and member number are both entered, status for specified members displays.

Action/ Object	Qualifier	Qualifier Description	Logins	Default	Feature Interactions
monitor trunk	***group***	1 – 99. If a group number is entered without a member number, the member number defaults to 1.	init inads craft cust rcus bcms browse	1 (one)	none
	member	1 – 99. If a member number is entered, the member status displays. Examples: **monitor trunk 78** **monitor trunk 80/** **monitor trunk 78/1** **monitor trunk 80/2**			

Output

The following example shows the output from **monitor trunk 78/1**.

```
monitor trunk 78/1

                              TRUNK STATUS

 Trunk Group/Member: 078/001            Service State: in-service/idle
               Port: 01C1505         Maintenance Busy? no
 Signaling Group ID:                     CA-TSC State:
    Connected Ports:
```

Field descriptions

`Trunk Group/ Member`	Trunk group and group member number. (1-99/1-99).
`Port`	The port location (cabinet-carrier-slot-circuit) for trunks.
`Signaling Group ID`	If the trunk is ISDN, this field contains the number of the ISDN Signaling Group. Otherwise, this field is blank.()
`Connected Ports`	Port locations (cabinet-carrier-slot-circuit) connected to the trunk.

`Service State`	In-service/active, in-service/idle, out-of-service, out-of-service-NE (Near End), out-of-service-FE (Far End), maint-NE/active, maint-FE/active, maint-NE/idle, maint-FE/idle, pending-in-service, pending-maint, or disconnected. NE (Near End) and FE (Far End) refer to the “end” of the trunk that has placed the facility in its current state.
`Maintenance Busy`	This field identifies maintenance testing that occurs on the trunk.
`CA-TSC State`	The state of temporary signaling connections. (connection set up to pass call information over PRI signaling links).

netstat ip-route

Use **netstat ip-route** to display routing tables that are resident in the C-LAN and VAL circuit packs. Use the “board” option (**netstat ip-route board UUCss**) to display the routing tables that are resident on a specific C-LAN or VAL board.

Action/ Object	Qualifier	Qualifier Description	Logins	Default	Feature Interactions
netstat ip-route	***board UUCss***	Example: **netstat ip-route board 01A03**	init inads craft	none	none

Output

The following example shows the output from **netstat ip-route**.

```
netstat ip-route                                        Page 1 of x
                    IP ROUTING

Bd/Pt    Destination   Gateway          Subnet Mask    Interface

01E0517  0.0.0.0       172.17.17.254    0.0.0.0          cpm0
01E0518  127.0.0.1     127.0.0.1        255.255.255.255   lo0
01B0907  172.17.17.165 172.17.17.165    255.255.255.255  ppp6
01B1233  0.0.0.0       0.0.0.0          0.0.0.0       motfec0
01B1218  127.0.0.1     127.0.0.1        255.255.255.255   lo0
```

Field descriptions

`Board/Pt` The location of the circuit pack that provides the interface for the route.

`Destination` Display-only field showing the IP address of each route's destination. The Destination is administered on the Node Name screen.

On the Node Name screen, "Default" in the Destination field administers the default route.

`Gateway` Display-only field showing the IP address of the Gateway used to reach the Destination. A Gateway is administered on the Node Name screen.

`Subnet Mask` Display-only field showing the subnet mask information entered on the IP Interfaces screen.

`Interface`

- `pppn` represents one of the PPP interfaces on the C-LAN, which is administered as port n+1.
- `cpm0` represents the ethernet interface on the C-LAN which is administered as port 17.
- `motfec0` represents the ethernet interface on the VAL circuit pack, which is administered as port 33.
- `lo0` represents the loopback interface on the circuit pack (C-LAN or VAL) which does not need to be administered.

netstat arp

Use this command to:

- display the contents of the C-LAN circuit pack's Address Resolution Protocol (ARP) table
- help troubleshoot, isolate, and correct duplicate IP addresses within the network.

Action/ Object	Qualifier	Qualifier Description	Logins	Default	Feature Interactions
netstat-arp	***unsorted***	Displays data in the order it was received.	init inads craft station and trunk MSP permissions		
	ip-sorted	Displays data sorted by IP address			
	mac-sort	Displays data sorted by MAC address			
	ck-dup	Displays entries that contain duplicated IP addresses.			

Instructions

1. At a system terminal type **netstat-arp** and one of the following qualifiers:
   - ***unsorted*** (Screen 8-17)
   - ***ip-sorted*** (Screen 8-18)
   - ***mac-sort*** (Screen 8-19)
   - ***ck-dup*** (Screen 8-20)

   and press Enter.

Output

netstat arp unsorted

```
netstat arp unsorted                                          Page   1 of   3

Net to Media Table
Seq  C-LAN                IP Address             Phys Addr      Type

01   11B15              135.247.062.254    02:e0:3b:db:c8:0a
02   11B14              192.011.131.254    00:30:6d:19:5c:0f
03   11B13              135.009.191.254    00:60:2f:a9:45:05
04   11B12              135.009.004.092    08:00:20:81:cc:b8
05   11B11              135.009.160.247    00:00:81:5a:27:05
06   11B10              135.009.160.223    08:00:20:1d:a7:0a
07   12B15              135.009.160.220    08:00:20:7d:ff:6a
08   12B14              135.009.191.201    00:00:81:7f:5d:e8
09   12B13              135.009.191.203    08:00:20:81:cc:b8
10   12B12              224.000.000.000    01:00:5e:00:00:00
11   12B11              224.000.000.000    01:00:5e:00:00:00
12   12B10              224.000.000.000    01:00:5e:00:00:00
13   13B15              224.000.000.000    01:00:5e:00:00:00
14   12B14              224.000.000.000    01:00:5e:00:00:00
15   12B13              135.009.004.147    01:50:da:bf:ae:2a
```

Screen 8-17. netstat arp unsorted

Use the Field descriptions (netstat arp) to interpret this report.

NOTE:
The actual display contains as many pages as are required to display all of the data received from the C-LAN circuit packs.

netstat arp ip-sort

```
netstat arp unsorted                                          Page   1 of   3

Net to Media Table
Seq  C-LAN  Device          IP Address              Phys Addr      Type

01   12D15                135.009.004.007    00:20:fc:1e:13:f9
02   15D14                135.009.004.021    08:00:20:87:f0:87
03   13D15                135.009.004.026    00:80:c7:ac:f0:dc
04   05A10                135.009.004.039    00:50:04:d9:b2:b0
05   11E09                135.009.004.041    00:a0:c9:a4:76:4d
06   12E14                135.009.004.044    00:50:da:ba:c7:93
07   11D10                135.009.004.052    00:50:04:d9:b1:4f
08   11D11                135.009.004.060    08:00:20:75:e3:86
09   03C09              135.009.004.079   08:00:20:7a:ff:b2
10   10E10              135.009.004.079   08:00:20:7a:ff:b2
11   05A15                135.009.004.093    08:00:20:81:cc:b8
12   07B05                135.009.004.106    08:00:20:83:21:d0
13   11B12                135.009.004.139    00:01:02:60:a5:43
14   10C09                135.009.004.140    00:a0:c9:b2:89:d7
15   03D15                135.009.004.147    00:50:da:bf:ae:2a
```

Screen 8-18. netstat arp ip-sort

The characters shown in bold indicate duplicate IP addresses found in the ARP data. Use the Field descriptions (netstat arp) to further interpret this report.

NOTE:
The actual display contains as many pages as are required to display all of the data received from the C-LAN boards.

netstat arp mac-sort

```
netstat arp mac-sort                                          Page   1 of   3

Net to Media Table
Seq  C-LAN                  IP Address            Phys Addr        Type

01   03E09              135.247.062.003    00:00:3c:04:2d:55
02   02A15               135.247.062.001    00:00:3c:04:7b:b1
03   10B12               135.009.191.011    00:00:77:01:ab:91
04   09C13               135.009.160.247    00:00:81:5a:27:05
05   11D15               135.009.191.201    00:00:81:7f:5c:e8
06DUP12B08               135.009.160.254    00:00:a2:c3:82:0a
07   14C06               135.009.160.115    00:00:a5:14:39:00
08   15C11               135.009.160.103    00:00:a5:f5:38:00
09   02A15               135.009.160.090    00:00:a5:f7:38:00
10   16D11               135.009.004.240    00:01:02:36:7c:c1
11   04A08               135.009.004.139    00:01:02:60:a5:43
12   09B15               135.009.004.177    00:01:02:60:a5:6b
13   15D13               135.009.004.204    00:01:02:60:a5:72
14   13A14               135.009.004.214    00:01:02:60:a5:82
15   07B09               135.009.004.199    00:01:02:60:a5:df
```

Screen 8-19. netstat arp mac-sort

The entries shown in bold with "**DUP**" by the `Net Seq` field indicate duplicate IP addresses found in the ARP data. Use the Field descriptions (netstat arp) to further interpret this report.

NOTE:
The report contains as many pages as are required to display all of the data received from the C-LAN circuit packs. In this example, the other duplicate address is on another page of the report.

netstat arp ck-dup

```
netstat arp ck-dup                                          Page   1 of   3

Net to Media Table
Seq  C-LAN                IP Address            Phys Addr       Type

01   03A12              135.009.160.110     08:00:6a:19:04:c3
00   07#10              135.009.160.110     08:00:6a:19:04:e3
```

Screen 8-20. netstat arp ck-dup

Use the Field descriptions (netstat arp) to interpret this report:

- The entry in bold indicates duplicate IP addresses found in the ARP data.
- If the systems finds no duplicate IP address, the NO DUPLICATE IP ADDRESSES FOUND message appears.

Field descriptions (netstat arp)

`Net Seq`	A switch-generated, sequential reference number
C-LAN	Location of the TN799 (C-LAN) circuit pack
`IP Address`	IP address
`Phys Addr`	The MAC address
`Type`	■ other — the IP address and the MAC address for the entry are disassociated. ■ invalid — the IP and MAC address for this entry are disassociated. ■ dynamic — Needs further investigation. ■ static — Needs further investigation.

ping

When debugging connectivity problems, a ping only indicates low-level connectivity. If an external ping works but higher-level applications such as DCS, CMS, or INTUITY do not, then you can only assume that there is connectivity to the board. Interrogate the switch for other clues as to why the higher-level application is not working.

Action/ Object	Qualifier	Qualifier Description	Logins[1]	Default	Feature Interactions
ping	**ip-address**	The IP address of the device to ping in the following format: www.xxx.yyy.zzz	init inads craft customer	packet length = 64 bytes	
	node-name	Administered node name (use **display node-names**)			
	board	The location of the C-LAN or IP Medpro board circuit pack (**UUCSS**)			
	packet-length	Range: 64-1,500 bytes 1-100			
	repeat	Examples: **ping ip-address 192.68.3.26** **ping ip-address 192.68.3.26 board 1C05** **ping ip address 168.24.3.66 packet-length 1500**			
	source	The ping source can be a virtual endpoint port ID. Examples: **ping ip-address 192.68.3.26 source S00015**			

1 You can place additional restrictions on the command by selecting the object “ip-address” on the Restricted Object List:

1. Type **change permissions *loginid*** (an administered login such as inads), and press Enter.
2. Set the `Additional Restrictions` field to **y** in the Administration Commands section of the form.
3. Go to the second or third page of the form.
4. Enter **ip-address** in the list of Restricted Objects and press Enter.

The ping command the following qualifiers:

- “ping ip-address”
- “ping node-name”
- “ping board”
- “ping packet-length”
- ping board
- ping packet-length

ping ip-address

This command “pings” the given IP address of the destination to ping. The command returns

- the port used to perform the test
- the pass/fail results of the test
- the round-trip delay time for successful tests
- the error code on tests that failed.

ping node-name

This command pings an administered node. Look the “**node-name**” up with the **display node-names** command).

ping board

The **board** qualifier specifies which C-LAN circuit pack from which to ping. By adding the ***board UUCSS*** qualifier to the command, you can also specify which C-LAN circuit pack (in the case of multiple C-LAN circuit packs). If only one C-LAN or IP Medpro board circuit pack is present, the **board** qualifier is optional. However, if the “board” option is not given, it will default to the first clan in the same region as the IP address that is being “pinged.”

ping packet-length

The **packet-length** qualifier specifies the packet length of the ping packet. Packet lengths of from 64 to 1500 bytes can be specified. The **packet-length** qualifier is optional, and if not used, the default packet length is 64 bytes. Specifying a longer packet length in the command line can show

- if a router or host has a problem fragmenting or reassembling transferred packets
- a more complete indication of the link status

If the packet length is not specified, the default is 64 bytes. You can add the **packet-length** qualifier and the packet size (64-1500 bytes) to the other ping commands. Some examples include:

- **ping node-name packet-length 800**
- **ping ip-address 24.103.5.7 packet-length 100**
- **ping board UUCSS packet-length 1000**

NOTE:
The default DiffServ and 802.1p/Q parameters downloaded to a IP Media Processor board will be used in the execution of **ping** and **traceroute** commands which are sourced from that IP Media Processor. By convention, the recipient of a ping will reply with the same QoS value found in the received packet, hence the measurements reported should reflect the behavior of the type of packets sent. IP Media Processor-sourced pings should reflect audio transport performance and C-LAN-sourced pings should reflect control information transport performance.

Output

The following example shows the output from **ping ip-address packet-length**.

```
ping ip-address 192.68.3.26 packet-length 1500


TEST RESULTS
  End-pt IP        Port       Port Type  Result   Time(ms)  Error Code
  192.68.3.26      01C0202    PPP-PT     PASS     221       XXXX
```

Screen 8-21. ping ip-address report

Field descriptions

`End-pt IP`	The TCP/IP destination address of the ping command.
`Port`	Location of the C-LAN circuit pack (**UUCSS**).
`Port Type`	Can be either `PPP-PT` for PPP ports (ports 1-16) or `ETH-PT` for the Ethernet port (port 17).
`Result`	PASS or FAIL
`Time (ms)`	The round-trip time (in milliseconds) of the ping.
`Error Code`	Identifies problems associated with the circuitry in the data path for a peer-to-peer IP layer connection

Error messages

The system returns error messages listed in Table 8-7.

Table 8-7. Ping command error messages

Message	Interpretation
`www.xxx.yyy.zzz Internet address not assigned`	The system cannot find the IP address.
`Internet address not reachable from this board`	The IP address is not in the route table of the specified board.
`Local internet address not supported`	The CLAN board does not support ping of a local PPP ip address.
`More than one default route exists, specify board`	The IP address is not in the route table, and more than 1 C-LAN circuit pack has a default route.
`Invalid internet address`	Invalid Internet address parameter
`"CCcss" is an invalid identifier; please press HELP`	Invalid board location (when using the "board" option).
`Error encountered, could not complete request`	The internal error of not being able to find the port through which the IP address is reached.
`Out of range`	The packet size is greater than 1500 or less than 64 bytes in length or if there are invalid or unrecognized parameters
`WARNING Default packet length of 64 bytes used for TN799`	Indicates that the default packet length of 64 bytes is used for a TN799 board

recycle carrier

This command recycles power for specified carriers. When power units are replaced in carriers, this command recycles that carrier's power. *Processor carriers and their duplicates and EPN control carriers or SCC carriers cannot be recycled. Carriers with active, recycled EIs, experience disrupted communications with their cabinets. Carriers with active, recycled tone-clock boards experience disrupted service for ports in port networks.* For more details on recycling and trouble shooting power units, refer to "Troubleshooting Control Carrier Power Units" in Chapter 5, ''Routine Maintenance Procedures''.

Action/ Object	Qualifier	Qualifier Description	Logins	Default	Feature Interactions
busyout mis	***location***	Physical location of desired carrier. Carrier b-e. (b not applicable for SPE duplex PPNs)	init inads craft	cabinet = 1 none for carrier	see below

Feature Interactions

Carrier "a" cannot recycle its power. When carrier "b" of the PPN contains SPE duplication hardware, it cannot recycle its power.

Recycling maintenance objects results in:

Recycled component	Result
Port Carriers	Interrupted service
Carriers with active EIs	Disrupted communication with that cabinet
Carriers with active tone-clock boards	Interrupted service for ports port network
Carrier	The list configuration command causes circuit packs to display red LEDs and NO BOARDs.

The **test tdm** command accelerates retirement of these problems.

Output

The following output example displays **recycle carrier c**.

```
recycle carrier c

                          TEST RESULTS

  Port    Maintenance Name  Alt. Name Test No. Result       Error Code
  01C     CARR-POW                     126      PASS

Command successfully completed
```

Field descriptions

Port	Port address (cabinet-carrier) for tested maintenance objects. This field displays cabinet and carrier values.
Maintenance Name	CARR-POW.
Alt. Name	Not applicable.
Test Number	T126.
Test Result	Success status of a busied out object (PASS, ABORT, FAIL)
Error Code	System-generated description of a command failure.

refresh route-table

Occasionally the tables used to route IP messages become corrupted and/or contain stale routes, delaying packet delivery. This command removes all dynamic (learned) routes from the TN799 (C-LAN) circuit pack's route tables and replaces any of the stale (administered) routes that have become corrupted.

Action/ Object	Qualifier	Qualifier Description	Logins	Defaults	Feature Interactions
refresh route-table	***all***	Refreshes all C-LAN circuit packs in a switch	init inads craft station and trunk MSP permissions		
	location	Refreshes the route tables in a specific C-LAN circuit pack (CCcss)			

NOTE:
This command is call-preserving, so the switch does not drop any calls already in service.

Instructions

1. At the switch terminal type **refresh route-table** and one of the following qualifiers:
   - ***all*** (Screen 8-22)
   - ***location*** (CCcss) See examples in the `Board Location` field in Screen 8-23.

   and press Enter.

```
refresh route-table all                                        Page   1 of   1

C-LAN Board Location   Number of Routes Removed    Number of Routes Added

       01B11                          7                          0
       01B12                          0                          0
       01B13                          0                          1
       01C05                          2                          0
       01C06                          3                          0
       01C07                          0                          0
       01C08                          15                         2
       01C09                          2                          0
       01C10                          5                          0
       01C11                          9                          0


                         Refresh Route Table Is Completed
```

Screen 8-22. Refresh route-table all

Use the information in Field descriptions (refresh route-table) to interpret the report.

```
refresh route-table 01B11                                      Page   1 of   1

C-LAN Board Location   Number of Routes Removed    Number of Routes Added

     01B11                          7                          0


                         Refresh Route Table Is Completed
```

Screen 8-23. Refresh route-table 01B11

Use the information in Field descriptions (refresh route-table) to interpret the report.

Field descriptions (refresh route-table)

`C-LAN Board Location`	The physical location of the circuit pack in CCcss format (cabinet, carrier, slot)
`Number of Routes Removed`	The number of routes that were deleted from the TN799 (C-LAN) route tables
`Number of Routes Added`	The number of routes that were added from the TN799 (C-LAN) route tables

refresh spe-standby

This command immediately places Standby SPEs into Standby Mode. This command preempts in-progress Standby SPE maintenance activity, resets the Standby SPE Processor, and refreshes the Standby SPE's DRAM memory (that is, all of Active SPE DRAM memory is shadowed to the Standby SPE memory). Refresh reactivates memory shadowing that is disabled while standby SPE is in maintenance mode When Standby SPEs return to Standby Mode, their memory up-date with Active SPE memory.

Because it preempts Standby SPE maintenance activities, the **refresh spe-standby** command should be used judiciously. The following potential side-effects can occur:

- Tests that detect faults and/or lack of faults on Standby SPE components might not run. Accordingly, alarms are not raised or retired.
- Translation saves might not execute so translations data on Active and Standby SPE mass storage devices do not reflect the changes made since the last translation save.

Action/ Object	Qualifier	Qualifier Description	Logins	Defaults	Feature Interactions
refresh spe-standby			init inads craft	none	Standby SPEs must be in maintenance mode before the refresh command can be invoked.

release access-endpoint

This command removes all ports associated with the specified access endpoint from a maintenance busy state. Periodic and scheduled tests subsequently resume on the released ports. Maintenance completes background initialization testing on the released ports. For details of the test sequence, refer to [3].

Action/ Object	Qualifier	Qualifier Description	Logins	Defaults	Feature Interactions
release access-endpoint	***extension***	number associated with desired access endpoint. Examples: **release access-endpoint 25012** **release access-endpoint 77868**	init inads craft nms	none	none

Output

The following example shows the output from the **release access-endpoint 22502** command and assumes that the access endpoint ports for extension 22502 are in cabinet 1, carrier C, slot 11, circuit 1 to 6.

```
release access-endpoint 22502          page 1 of 1

                    COMMAND RESULTS

 Port  Maintenance Name Alt. Name  Result   Error Code
 01C1101  WAE-PORT    22502    PASS
 01C1102  WAE-PORT    22502    PASS
 01C1103  WAE-PORT    22502    PASS
 01C1104  WAE-PORT    22502    PASS
 01C1105  WAE-PORT    22502    PASS
 01C1106  WAE-PORT    22502    PASS

Command Successfully Completed
```

Field descriptions

`Port`	Port address (cabinet-carrier-slot-circuit) of released maintenance.
`Maintenance Name`	The type of released maintenance object. (wideband access point =WAE-PORT, single port access endpoint = TIE-DS1.
`Alt. Name`	Alternate way to identify maintenance objects. This field contains the extension number of the access endpoint.
`Result`	Success status of a busied out object (PASS, ABORT, FAIL)
`Error Code`	System-generated description of a command failure.

release board

This command activates administered maintenance objects on the circuit pack at specified locations. Tests are executed to ensure its usability.

Action/Object	Qualifier	Qualifier Description	Logins	Defaults	Feature Interactions
release board	***location***	Physical location: **PCsspp** Examples: **release board 01c11** **release board 02c15**	init inads craft nms	none	none

Output

The following example shows the output from the **release board 1c07** command and assumes that the board in cabinet 1, carrier c, slot 7 is an analog board with three ports administered.

```
release board 01C07

                    COMMAND RESULTS

Port   Maintenance Name  Alt. Name  Result  Error Code
01C07     ANL-BD                   PASS
01C0702   ANL-LINE                 PASS
01C0701   ANL-LINE        51001    PASS
01C0703   ANL-LINE                 PASS

Command successfully completed
```

Field descriptions

`Port` — Port address (cabinet-carrier-slot) of released maintenance object.

`Maintenance Name` — The type of maintenance object that is being released.

`Alt. Name` — Alternate way to identify maintenance objects.

If the Object is	The field contains
station	extension
trunk	*xxx/yyy* (*xxx* = trunk group, *yyy* = member)
private CO line	*P/xxx* (*xxx* = private CO line group number)

`Result` — Success status of a busied out object (PASS, ABORT, FAIL)

`Error Code` — System-generated description of a command failure.

release cdr-link

This command removes maintenance objects associated with specified call detail recording (cdr)-links from a maintenance busy state.

These links provide asynchronous data connections from switches to peripherals; they are composed of a:

- Far end data module
- Simulated data channel on a PKTINT board
- Manager that initiates and maintains the link
- Controller/protocol that services the link

For information on what a CDR link is and does, see the description of the "status cdr-link" command.

Action/Object	Qualifier	Qualifier Description	Logins	Defaults	Feature Interactions
release cdr-link	***link-id***	primary secondary Examples: **release cdr-link primary** **release cdr-link secondary**	init inads craft	none	none

Output

The following example shows the output from the **release cdr-link primary** command.

```
release cdr-link primary

                      COMMAND RESULTS

 Port   Maintenance Name   Alt. Name   Result    Error Code
           PRI-CDR                      PASS

Command successfully completed
```

Field descriptions

`Port`	Not applicable. ()
`Maintenance Name`	Type of released maintenance object. (primary cdr-link = PRI-CDR, secondary cdr-link = SEC-CDR)
`Alt. Name`	Not applicable. ()
`Result`	Success status of a busied out object (PASS, ABORT, FAIL)
`Error Code`	System-generated description of a command failure.

release data-module

This command activates the specified data module (or data channel). Hardware tests are executed to verify that the equipment is functioning.

Action/Object	Qualifier	Qualifier Description	Logins	Defaults	Feature Interactions
release data-module	***extension***	Extension number associated with desired data module or data channel. Examples: **release data-module 310**	init inads craft cust nms	none	none

Output

The following example shows the output from **release data-module 300**.

```
release data-module 310

                         COMMAND RESULTS

Port   Maintenance Name  Alt. Name   Result   Error Code
01C1103    DIG-LINE                  PASS

Command successfully completed
```

Field descriptions

`Port` Port address (cabinet-carrier-slot-circuit) of the maintenance object that is busied out or released, or the number of the data channel.

`Maintenance Name` The type of maintenance object that is being busied out or released.

`Alt. Name` Alternate way to identify maintenance objects.

If the Object is	The field contains
station	extension
trunk	*xxx/yyy* (*xxx* = trunk group, *yyy* = member)
private CO line	*P/xxx* (*xxx* = private CO line group number)

`Result` Success status of a busied out object (PASS, ABORT, FAIL)

`Error Code` System-generated description of a command failure.

release journal-printer

This command activates maintenance objects associated with a specified pms-log or wakeup-log link. Execute hardware tests to verify that equipment is functioning.

For information on journal printer links, see "busyout pms-link".
For information on journal printers, see "status journal-link".

Action/Object	Qualifier	Qualifier Description	Logins	Default	Feature Interactions
release journal-printer	*pms-log* *wakeup-log*	releases links to pms printers. (1) Releases links to wakeup logging facilities. (0) Examples: **release journal-printer pms-log** **release journal-printer wakeup-log**	init inads craft nms	none	see below

Feature Interactions

Specific component maintenance performed on a link sometimes conflicts with link maintenance (busied out objects create link setup failure). Frequent link re-setup attempts may delay faulty component recovery. For best results, use **busyout** to disable attempted link re-setup.

Output

The following output example is a display of **release journal-printer wakeup-log**.

```
release journal-printer wakeup-log

                          COMMAND RESULTS

Port    Maintenance Name    Alt. Name    Result    Error Code
 0          JRNL-LINK                   PASS

Command successfully completed
```

Field descriptions

`Port`	Port address of busied out or released maintenance object. (wakeup log = 0; pms log = 1)
`Maintenance Name`	Type of busied out or released maintenance object.
`Alt. Name`	Not applicable.
`Result`	Success status of a busied out object (PASS, ABORT, FAIL)
`Error Code`	System-generated description of a command failure.

release link

The **release link** command activates MOs associated with a specified link. Hardware tests are executed to verify that equipment is functioning properly.

Action/ Object	Qualifier	Qualifier Description	Logins	Defaults	Feature Interactions
release link	***link-id***	Number associated with each link (1–8). 1 through 4 reside on Processor Interface circuit packs “1a1” or “1b1” 5 through 8 reside on Processor Interface circuit pack “1a2” or “1b2.” Examples: **release link 1** **release link 8**	init inads craft	none	none

Output

The following output example is a display of **release link 1**.

```
release link 1

                        COMMAND RESULTS

Port   Maintenance Name  Alt. Name  Result  Error Code
01C0301    PI-LINK                  PASS

Command successfully completed
```

Field descriptions

`Port`	Port address (cabinet-carrier-slot-circuit) of the busied out or released maintenance object. Port address represents the link-id.
`Maintenance Name`	The type of maintenance object that is being released.
`Alt. Name`	Not applicable.
`Result`	Success status of a busied out object (PASS, ABORT, FAIL)
`Error Code`	System-generated description of a command failure.

release mis

The **release mis** command activates management information systems. Hardware tests are executed to verify that equipment is functioning properly.

Action/Object	Qualifier	Qualifier Description	Logins	Defaults	Feature Interactions
release mis			init inads craft cust rcust	none	none

Output

The following output example is a display of **release mis**.

```
release mis

                        COMMAND RESULTS

Port   Maintenance Name   Alt. Name   Result   Error Code
               MIS                   PASS

Command Successfully Completed
```

Field descriptions

Port	Not applicable.
Maintenance Name	MIS
Alt. Name	Not applicable.
Result	Success status of a busied out object (PASS, ABORT, FAIL)
Error Code	System-generated description of a command failure.

release modem-pool

The **release modem-pool** command deactivates specified modem pool groups or group members. Specifying group numbers, member numbers releases single group members. Specifying modem pool group numbers releases members in a modem pool group.

Action/Object	Qualifier	Qualifier Description	Logins	Defaults	Feature Interactions
release modem-pool	***group***	1-5.	init inads craft	none	none
	member	pair of analog and digital line ports (or two pair for the Integrated modem-pool case). 1-32. Examples: **release modem-pool 1** **release modem-pool 4/3**			

Output

The following example shows the output from **release modem-pool 1**.

```
release modem-pool 1              SPE B

                        COMMAND RESULTS

Port      Maintenance Name   Alt. Name  Result   Error Code

01C0701      MODEM-PT                   PASS
01C0703      MODEM-PT                   PASS

Command successfully completed
```

Field descriptions

`Port`	Port address (cabinet-carrier-slot-circuit) of busied out maintenance object.
`Maintenance Name`	MODEM-PT.
`Alt. Name`	This field is not applicable to this command.
`Result`	Success status of a busied out object (PASS, ABORT, FAIL)
`Error Code`	System-generated description of a command failure.

release packet-control

This command activates the packet-control circuit pack, and reestablishes each terminated point-to-point signaling link on this packet-control. It is the complement to **busyout packet-control**, which deactivates packet control and destroys terminated point-to-point signaling links.

Action/ Object	Qualifier	Qualifier Description	Logins	Defaults	Feature Interactions
release packet-control	***location***	simplex = location parameter not used. Duplicated = packet control carrier (1A or 1B) Examples: **release packet-control 1A** **release packet-control 1B**	init inads craft	simplex = cabinet 1, carrier A. duplex = cabinet 1. (no default carriers.)	see below

Feature Interactions

High or Critical Reliability Systems disallow attempts to release the packet-control that resides in the standby control complex.

When packet-controls in the active control complex are released from previous busied-out states, connectivity across Packet Buses reestablish. ISDN-BRI point-to-point signaling links reestablish with **release packet-control**.

Output

The following output example is a display of **release packet-control 1A**.

```
release packet-control 1A

                        COMMAND RESULTS

Port  Maintenance Name   Alt. Name   Result   Error Code

 1A       PKT-CTRL                   PASS

Command successfully completed
```

Field descriptions

`Port`	Cabinet-Carrier where Packet-Control resides.
`Maintenance Name`	PKT-CTRL.
`Alt. Name`	Not applicable.
`Result`	Success status of a busied out object (PASS, ABORT, FAIL).
`Error Code`	System-generated description of a command failure.

release pms-link

The **release pms-link** command deactivates MOs that are associated with a property management system link.These links provide asynchronous data connections from switches to peripherals. They are composed of:

- Far end data module
- Simulated data channel on a NETCON board
- Manager that initiates and maintains the link
- Controller/protocol that services the link

Action/Object	Qualifier	Qualifier Description	Logins	Defaults	Feature Interactions
release pms-link			init inads craft	none	see below

Feature Interactions

Specific component maintenance performed on a link sometimes conflicts with link maintenance, itself. (Busied out objects create link setup failure). Frequent link re-setup attempts may delay faulty component recovery. For best results, use **busyout** to disable attempted link re-setup.

Output

The following output example is a display of **release pms-link**.

```
release pms-link

                        COMMAND RESULTS

 Port   Maintenance Name    Alt. Name   Result    Error Code
           PMS-LINK                     PASS
```

Field descriptions

`Port`	This field is left blank.
`Maintenance Name`	PMS-LINK
`Alt. Name`	Not applicable.
`Result`	Success status of a busied out object (PASS, ABORT, FAIL)
`Error Code`	System-generated description of a command failure.

release port

The **release port command** deactivates specified ports on circuit packs.

Action/Object	Qualifier	Qualifier Description	Logins	Defaults	Feature Interactions
release port	***location***	Physical location: **PCsspp** Examples: **release port 01c1101** **release port 02c1501**	init inads craft	none	none

Output

The following output example is a display of the **release port 1c0701** command. Assume that the port in cabinet 1, carrier c, slot 7, circuit 1 is an analog port.

```
release port 01C0701

                          COMMAND RESULTS

    Port   Maintenance Name   Alt. Name   Result   Error Code
  01C0701     ANL-LINE                     PASS

 Command successfully completed
```

Field descriptions

`Port` — Port address (cabinet-carrier-slot-circuit) of released maintenance object.

`Maintenance Name` — The type of maintenance object that is being released.

`Alt. Name` — Alternate way to identify maintenance objects.

If the Object is	The field contains
station	extension
trunk	*xxx/yyy* (*xxx* = trunk group, *yyy* = member)
private CO line	*P/xxx* (*xxx* = private CO line group number)

`Result` — Success status of a busied out object (PASS, ABORT, FAIL)

`Error Code` — System-generated description of a command failure.

release pri-endpoint

The **release-PRI endpoint** command removes PRI endpoint ports (B-channels) associated with specified PRI endpoint from maintenance busy states. Periodic and scheduled tests resume on released ports. The switch attempts to negotiate with the far-end PRI terminal adapter activating PRI endpoint port (B-channel). Maintenance does background initialization testing on released ports. For details of the test sequence, refer to [3].

Action/Object	Qualifier	Qualifier Description	Logins	Defaults	Feature Interactions
release pri-endpoint	***extension***	extension number associated with desired PRI endpoint.	init inads craft nms	none	none

Output

The following output example is a display of the **release pri-endpoint 22501** command. Assume that the PRI endpoint ports for extension 22501 are in cabinet 1, carrier B, slot 20, circuit 1 to 6.

```
release pri-endpoint 22501            page 1 of 1

                          COMMAND RESULTS

 Port      Maintenance Name Alt. Name  Result   Error Code
 01B2001        PE-BCHL       22501     PASS
 01B2002        PE-BCHL       22501     PASS
 01B2003        PE-BCHL       22501     PASS
 01B2004        PE-BCHL       22501     PASS
 01B2005        PE-BCHL       22501     PASS
 01B2006        PE-BCHL       22501     PASS

Command Successfully Completed
```

Field descriptions

`Port`	Port address (cabinet-carrier-slot-circuit) of released maintenance object.
`Maintenance Name`	PE-BCHL.
`Alt. Name`	Alternate way to identify maintenance objects. (PRI endpoint extension)
`Result`	Success status of a busied out object (PASS, ABORT, FAIL)
`Error Code`	System-generated description of a command failure.

release sp-link

The **release sp-link** command reactivates busied out system printer links and resolves active alarms for system printer links.

The system printer link is a link from the switch to an external printer. Administering system printer extensions to call system printers creates the links.

Action/Object	Qualifier	Qualifier Description	Logins	Defaults	Feature Interactions
release sp-link			init inads craft	none	none

Output

The following output example is a display of **release sp-link**.

```
release sp-link                SPE A

                       COMMAND RESULTS

Port    Maintenance Name    Alt. Name    Result    Error Code
            SYS-PRNT                      PASS

Command Successfully Completed
```

Field descriptions

`Port` — Port address (cabinet-carrier-slot-circuit) of busied out maintenance objects. ()

`Maintenance Name` — The type of maintenance object that is being busied out.

`Alt. Name` — Alternate way to identify maintenance objects.

If the Object is	The field contains
station	extension
trunk	*xxx/yyy* (*xxx* = trunk group number, *yyy* = member)
private CO line	*P/xxx* (*xxx* = private CO line group number)

`Result` — Success status of a busied out object (PASS, ABORT, FAIL)

`Error Code` — System-generated description of a command failure.

release spe-standby

The **release spe-standby** command removes busyout statuses of standby SPEs. Memory shadowing restores, a memory refresh of the standby SPE occurs, and 1 minute later the equivalent of scheduled standby SPE maintenance returns the standby SPE's Fault Severity Level to its appropriate value.

Standby SPE releases are allowed if communication to the standby is down.

Action/Object	Qualifier	Qualifier Description	Logins	Defaults	Feature Interactions
release spe-standby			init inads craft	none	see below

Feature Interactions

When standby SPEs release a memory, a refresh executes and the standby Fault Severity Level lowers to its appropriate level. One minute later, the equivalent of scheduled standby SPE maintenance executes and a spontaneous SPE interchange might occur, depending of Fault Severity Levels of the two SPE's.

If the standby SPE is in poor health, memory shadowing must not enable (communication to the standby is impossible, if it is enabled). Then the standby SPE releases successfully.

Output

The following output example is a display of the **release spe-standby** command and assumes that the standby SPE is located in carrier "B."

```
release spe-standby              SPE A

                          COMMAND RESULTS

Port  Maintenance Name    Alt. Name    Result    Error Code
01B       STBY-SPE                     PASS

Command successfully completed
```

Field descriptions

`Port`	Port address displays the standby SPE's cabinet and carrier location. (01A or 01B)
`Maintenance Name`	STBY-SPE
`Alt. Name`	Not applicable. ()
`Result`	Success status of a busied out object (PASS, ABORT, FAIL)
`Error Code`	System-generated description of a command failure.

release station

This command removes specified administered extensions from a maintenance busy state.

Action/Object	Qualifier	Qualifier Description	Logins	Defaults	Feature Interactions
release station	***extension***	extension number associated with the desired voice terminal Examples: **release station 10020** **release station 32770**	init inads craft cust	none	none

Output

The following output example is a display of **release station 1002**.

```
release station 1002

                         COMMAND RESULTS

 Port      Maintenance Name   Alt. Name   Result   Error Code
 01C1102       DIG-LINE                   PASS

Command successfully completed
```

Field descriptions

`Port`	Port address (cabinet-carrier-slot-circuit) of the released maintenance object.
`Maintenance Name`	Type of released maintenance object.
`Alt. Name`	Alternate way to identify maintenance objects. This field contains an extension when the object is a station.
`Result`	Success status of a busied out object (PASS, ABORT, FAIL)
`Error Code`	System-generated description of a command failure.

release tdm

This command removes specified tdm buses from a maintenance busy state.

Action/ Object	Qualifier	Qualifier Description	Logins	Defaults	Feature Interactions
release tdm	*port-network pn number*	specifies the Port Network number of the TDM bus to be released.	init inads craft	none	System tears down busied out buses. No new calls can be administered on busied out buses
	bus bus	(“a” or “b”) specifies desired half of the TDM bus. Each 512 time slot TDM bus is configured as two duplicate 256 time slot buses. This division allows for duplication of control channels and dedicated tone time slots. The default control bus (carrying the control channel) is the “a” bus, while the default tone bus (carrying dedicated tones) is the “b” bus. (1 - 3) Examples: **release tdm port-network 1 bus a** **release tdm port-network 1 bus b**			

Output

The following output example is a display of **release tdm port-network 1 bus a**.

```
release tdm port-network 1 bus a

                        COMMAND RESULTS

Port     Maintenance Name   Alt. Name   Result    Error Code
PN 01A       TDM-BUS                   PASS

Command successfully completed
```

Field descriptions

`Port`	Port network number (preceded by “PN”) and bus (“A” or “B”) associated with the TDM bus.
`Maintenance Name`	TDM-BUS
`Alt. Name`	Not applicable.
`Result`	Success status of a busied out object (PASS, ABORT, FAIL)
`Error Code`	System-generated description of a command failure.

release tone-clock

This command removes specified tone/clocks from maintenance busy states.

Action/Object	Qualifier	Qualifier Description	Logins	Defaults	Feature Interactions
release tone-clock	***location***	Physical location: **PCsspp** Examples: **release tone-clock c**	init inads craft	1 (one)	none

Output

The following output example is a display of the **release tone-clock 1a** command.

```
release tone-clock 1a

                          COMMAND RESULTS

Port   Maintenance Name   Alt. Name   Result   Error Code
01A         TONE-PT                    PASS
01A         TDM-CLK                    PASS
01A         TONE-BD                    PASS

Command successfully completed
```

Field descriptions

`Port`	The tone clock circuit pack maintenance object displays the cabinet and carrier of the specified tone/clock board.
`Maintenance Name`	TONE-PT, TDM-CLK and TONE-BD
`Alt. Name`	Not applicable.
`Result`	Success status of a busied out object (PASS, ABORT, FAIL)
`Error Code`	System-generated description of a command failure.

release trunk

The **release trunk** command removes specified trunk groups or trunk group members from a maintenance busy state. Specifying the group number, releases a single group member and the member number. Specifying the trunk group number releases members in a trunk group.

Action/Object	Qualifier	Qualifier Description	Logins	Defaults	Feature Interactions
release trunk	***group*** member	Group number (1–99) Member number (1–99) Examples: **release trunk 78** **release trunk 78/1**	init inads craft	none	none

Output

The following output example is a display of the **release trunk 78/1** command.

```
release trunk 78/1

                            COMMAND RESULTS

 Port     Maintenance Name    Alt. Name   Result    Error Code
 01C1505        CO_TRK           78/01     PASS

Command successfully completed
```

Field descriptions

`Port` — Port address (cabinet-carrier-slot-circuit) of the released maintenance object.

`Maintenance Name` — The type of maintenance object that is being released.

`Alt. Name` — Alternate way to identify maintenance objects.

If the Object is	The field contains
station	extension
trunk	*xxx/yyy* (*xxx* = trunk group, *yyy* = member)
private CO line	*P/xxx* (*xxx* = private CO line group number)

`Result` — Success status of a busied out object (PASS, ABORT, FAIL)

`Error Code` — System-generated description of a command failure.

remove file

remove file [path] board ppcss

This command requests the board ppcss to remove the file given by path. If the file does not exist on the source board's filesystem, an error message, file not found is displayed on the SAT.

To remove a file in a subdirectory, specify the entire path starting at "/".

remove license

Use **remove license** to erase a non-field License File from customer switches, translations, and memory. For example, if a default license has been installed to perform customer upgrades, it must be removed when the customer's own translation media is returned.

To remove a License File from the translation media, use **save translation** after **remove license**.

Action/Object	Qualifier	Qualifier Description	Logins	Defaults	Feature Interactions
remove license		Removes License File from memory.	init inads draft dadmin		

Output

```
remove license

                              REMOVE LICENSE FORM

           Remove License? n


  WARNING: Need to save translation and reboot to make the change permanent
```

Screen 8-24. Remove License Form

Type **y** in the `Remove License` field and press Enter to remove the License File.

reset board

This command performs a soft reset of every specified, administered port on the port circuit pack. Ports must be busied out before the port circuit pack resets.

WARNING:
This command is service disrupting and may cause extraneous alarms.

Action/Object	Qualifier	Qualifier Description	Logins	Defaults	Feature Interactions
reset board	***location***	Physical location: **PCsspp**	init inads craft nms	carrier = 1	none
	repeat number	Number of times each board reset repeats (1– 00) Examples: **reset board 01c11** **reset board c08** **reset board 03d12 r 3**		repeat number = 1	

Output

The following output example is a display of **reset board 1c07** and assumes that the board in port network 1, carrier c, slot 7 is an analog board with three ports administered.

```
reset board 1C07

                              TEST RESULTS

 Port    Maintenance Name    Alt. Name Test No. Result    Error Code
 01C07        ANL-BD                      53     PASS

Command Successfully Completed
```

Field descriptions

`Port`	Port address (cabinet-carrier-slot) of the reset maintenance object.
`Maintenance Name`	Type of reset maintenance object.
`Alt. Name`	Alternate way to identify maintenance objects.

If the Object is	The field contains
station	extension
trunk	*xxx/yyy* (*xxx* = trunk group, *yyy* = member)
private CO line	*P/xxx* (*xxx* = private CO line group number)

`Result`	Success status of a busied out object (PASS, ABORT, FAIL)
`Error Code`	System-generated description of a command failure.

reset interface

This command resets the Processor Interface circuit pack, reads its associated software from tape, restarts applications processes, re-establishes permanent switched calls, and sets up each enabled link. If the interface cannot be established, a Major alarm raises on the interface and all enabled links deactivate. When the Distributed Communications System (DCS), Audio Information Exchange (AUDIX), or Call Management System (CMS) are initially administered, links for these applications and submitting the form restarts the interface. Before Processor Interface circuit packs are replaced, technicians must power down the switch and restart it. (unless the system is equipped with High or Critical Reliability)

For troubleshooting, see **status interface, status link,** and **status processor-channel** commands to locate problems before performing a **reset interfaces**. (link traffic is interrupted)

WARNING:
The interface command interrupts operation of the AP, DCS, AUDIX, CMS or ISDN-PRI.

Action/ Object	Qualifier	Qualifier Description	Logins	Defaults	Feature Interactions
reset interface	***location***	(cabinet-carrier-position) of the processor interface (PI board). The position determines cleared processor interface circuit pack. first processor interface = 1 second processor interface = 2 Examples: **reset interface 01a1** **reset interface a2** **reset interface 01b1** **reset interface 01b2**	init inads craft	none	none

reset ip-endpoints

Use **reset ip-endpoints** to unregister IP 4600 series phones, IP softphones, H.323 stations.

Action/Object	Qualifier	Qualifier Description	Logins	Defaults	Feature Interactions
reset ip-endpoints			init inads craft	none	

reset maintenance

This command resets technician-specified EPN maintenance circuit packs. Specifying cabinets 2 or 3 resets EPN maintenance circuit packs in carrier “a” of the specified cabinet.

This command also drops a SAT terminal session on the reset EPN maintenance circuit pack. If this command runs from a EPN maintenance SAT terminal, reset results do not display.

Action/ Object	Qualifier	Qualifier Description	Logins	Default	Feature Interactions
reset maintenance	***location***	Physical location of the EPN maintenance circuit pack (carrier number). Examples: **reset maintenance 02** **reset maintenance 2** **reset maintenance 3a**	init inads craft	none	SAT is dropped before reset results can display, when command runs from EPNSAT. Examine error and alarm logs for “MAINT” entries to determine reset success.

Output

The following output example is a display of **reset maintenance 02a**.

```
reset maintenance 02A

                              TEST RESULTS

Port   Maintenance Name  Alt. Name  Test No.  Result  Error Code
02A           MAINT                   306      PASS

Command successfully completed
```

Field descriptions

`Port`	Port address (cabinet-carrier-slot) of the reset MO.
`Maintenance Name`	MAINT
`Alt. Name`	Not applicable. ()
`Result`	Success status of a busied out object (PASS, ABORT, FAIL)
`Test No.`	306.
`Error Code`	System-generated description of a command failure.

reset spe-standby

The **reset spe-standby** command converts standby SPEs from standby mode to maintenance mode with the defined restart level. This command applies to high or critical reliability systems.

Action/Object	Qualifier	Qualifier Description	Logins	Defaults	Feature Interactions
reset spe-standby	***level***	1 = Warm Restart 2 = Cold-2 3 = Cold1 4 = Reboot 5 = Extended Reboot Examples: **reset spe-standby 1** **reset spe-standby 2** **reset spe-standby 3**	init inads craft	none	see below

Feature Interactions

This command invokes standby SPE initialization like low level maintenance. Software never escalates requested reset levels. Technicians always determine reset levels.

If the standby SPE contains a software memory card and the requested restart level is 4 or 5, the standby SPE reloads system software before rebooting.

reset system

The **reset system** command is increasingly destructive as reset levels increase.

This command switches control from currently-active SPEs to standby SPEs in a High or Critical Reliability System through HOT restart interchanges. **Once planned interchanges start, they cannot abort from the CANCEL key.** If **reset system interchange** commands are rejected because standby SPE Fault Severity Levels are higher than active SPEs, the **health-override** command can force a HOT interchange.

The **reset system interchange** command does not disrupt in-progress calls. However, it drops links (including CDR and PMS) to local and remote administration terminals. It also drops and re-establishes connections on the Network Control Circuit Pack data channels. During the interchange, callers cannot place calls, but current calls are unaffected.

When a system restart occurs with the corresponding vector bit set, a core dump is written to memory card, only if the memory card is the special core dump card), the vector is cleared, and the requested restart is performed.

All successful reset system commands log users off.

Action/Object	Qualifier	Qualifier Description	Logins	Defaults	Feature Interactions
reset system	*level* *interchange* *health-override*	See below Examples: **reset system 1** **reset system 2** **reset system interchange health-override**	init inads craft	none	see below

level Reset levels are entered numerically:

1 = Warm Restart

2 = Cold-2

3 = Cold1

4 = Reboot

5 = Extended Reboot

interchange System control passes to standby SPEs as active and standby SPEs change roles. The optional “health-override” qualifier can be entered to bypass Fault Severity Levels of standby SPEs to force an interchange. SPE alarm components determine Fault Severity levels. Each component is assigned a severity level, and the most severe SPE alarm defines Fault Severity Levels for SPEs. The following table lists maintenance objects, their alarms, severities and interchange restart levels that affect SPE Fault Severity Levels.

Maintenance Object	Alarm Level	On/Off Board	Fault Severity Level	Restart Level
STBY-SPE	WARNING	OFF	120	None
MEM-BD	MAJOR or MINOR	ON	110	Hot or Warm
MEMORY	MAJOR or MINOR	ON	110	Hot or Warm
STBY-SPE	MAJOR	ON	100	None
PROCR	MAJOR	ON	70	Hot or Warm
SW-CTL	MAJOR	ON	65	Cold 2
MEM-CARD	MAJOR	OFF	65	Cold 1
DUPINT	MAJOR	ON	61	Hot
CARR-POW	MAJOR	ON	61	Cold 2
SHDW-CIR	MAJOR	ON or OFF	60	Warm
SHDW-LINK	MAJOR	ON	60	Warm
SW-CTL	MINOR	ON	40	Hot
PR-MAINT	MINOR	ON	30	Hot

Maintenance Object	Alarm Level	On/Off Board	Fault Severity Level	Restart Level
PI-BD	MAJOR or MINOR	ON	20	Hot
PKT-CTRL	MAJOR	ON or OFF	20	Hot
PKT-CTRL	MINOR	ON or OFF	15	Hot
PI-PT	MAJOR	ON	15	Hot
DATA-CHL	MINOR	ON	15	Hot
DATA-CON	MINOR	ON	15	Hot
DATA-BD	MINOR	ON	15	Hot
MEM-CARD	MINOR	ON or OFF	10	Hot
PR-MAINT	MINOR	OFF	8	Hot

A **reset system interchange** command aborts if:

- The standby SPE is down
- The active SPE is locked active
- Communication to the standby SPE is not possible
- Memory shadowing to the standby SPE is not functioning
- The standby SPE is not fully refreshed
- The standby SPE is busied out

health-override

If HOT restart interchanges fail because Fault Severity Levels of standby SPEs are higher than active SPEs, the health-override command tries to force a switch. If the switch occurs, new active SPE Fault Severity Level raises to prevent a software-initiated HOT SPE interchanger. This artificial raising of active Fault Severity Levels lasts for one hour, then Fault Severity Levels of both SPEs returns to their normal values.

Feature Interactions

- The **reset command** invokes system initialization like low level maintenance. Software never escalates requested reset levels. Technicians determine the levels.
- Two hardware switches are associated with active and standby SPEs. These hardware switches override demand maintenance activities requested by system technicians. If active SPEs are locked active with these hardware switches, interchanges do not occur until the active is unlocked.
- Successful SPE interchanges logoff PPNSAT terminals.
- Restart levels null the effect of the health-override option.

reset system 3

This command has been modified to require an additional parameter, but only if the reset level is 3. The **reset system 3** command includes the periodic synchronization of translations in a ATM WAN spare processor (WSP). When you issue this command, you must indicate whether you want to preserve the license or not:

- **reset system 3** ***preserve-license***—the License File information is retained in memory and is NOT overwritten with the License File on the translation media.

  Use this command when you are uploading translations to a WSP to synchronize with the PPN translations. The ***preserve-license*** qualifier

  — Prevents the PPN License File with the wrong serial number from overwriting the WSP License File.

  — Preserves the WSP product ID.

- **reset system 3** ***no-preserve-license***—the License File in memory IS overwritten with the License File on the translation media.

  — Use this command when you are uploading translations to a WSP so they are synchronized with the PPN. The license from the PPN does not overwrite the license on the WSP or SREPN.

Action/ Object	Qualifier	Qualifier Description	Logins	Defaults	Feature Interactions
reset system 3	preserve-license	Resets system, reads translations, and preserves the license information and product ID.			
	no-preserve-license	Resets system, reads translations, does not preserve the license information and product ID.			

reset translation-id

This command resets the translation-ID on the translation card(s) to match the processor(s), saves translations to the memory card, and restores use of the add, change, remove, and duplicate commands.

NOTE:
This command can be executed only by Avaya Services.

Action/Object	Qualifier	Qualifier Description	Logins	Defaults	Feature Interactions
reset translation-id		Example: **reset translation-id**	Avaya Services only		See "Error message"

Error message

In duplicated systems, the message,

```
Cannot reset translation-ID without standby SPE being
accessible
```

means that both processors must be sane and operational.

- A standby SPE that has been busied out must be released (**release standby-spe**).
- Check that the SPE-select switches on the DUPINT circuit pack are in the AUTO position.

reset val

This command performs the functions of the **reset board** command but overrides querying the board to determine if an announcement autosave is in process. This allows resetting the circuit pack if it is in the insane state.

```
reset val 1C07

                                TEST RESULTS

Port        Maintenance Name  Alt. Name Test No. Result            Error Code

01C07       VAL-BD                      53       PASS
```

Screen 8-25. Reset VAL report

restore announcements

This command copies announcement data from the active MSS devices to announcement boards.

Action/ Object	Qualifier	Qualifier Description	Logins	Defaults	Feature Interactions
restore announcements	*print* *schedule]*	Report sent to printer. Command is validated and then a scheduling form displays to schedule execution of the command. The command is then placed in the command queue and is executed at the specified time. The information displayed by the command is sent to the system printer instead of the screen.[1] Examples: **restore announcements**	init inads craft cust rcust	Tape-based: Announcement copies from active processor's tape to the announcement board. Card-mem based: Announcement data copies from active processor's to the announcement board.	see below

1 Refer to the Report Scheduler and System Printer feature specification for more details.

Feature Interactions

WARNING:
Manager I is blocked for other activities until the command completes (up to 45 minutes)

- If no announcement data module and no NETCON data module are administered, the system denies the command.
- If the announcement data module port is out of service or active (for example, performing an announcement playback), the system denies the command.
- If users are in integrated announcements sessions, the system denies the command.
- If the board is currently uploading or downloading, the system denies the command. Users cannot save or restore announcement after the **restore announcements** command commences.
- If no tape is in the tape drive when users attempt a copy, the command aborts.
- If the MSS is in use by another user or maintenance, the **restore announcements** command is not allowed.
- Unsaved or corrupted announcement files on the MSS, disallow the **restore announcements** command.

To prepare for a failure, users should copy announcement files to announcement boards. If errors result from hardware or firmware failures, MSS software logs hardware errors with maintenance. When errors occur, the system continually attempts to download boards in 10-minute intervals until a download succeeds, announcements record, or downloads initiate from the SAT. Then, error messages display indicating corrective action. If errors result from hardware or firmware failure, MSS software logs a hardware error with maintenance. Maintenance software invokes tests to diagnose and attempt to correct the problem. If maintenance software fails to correct problems, alarms raise indicating additional corrective action.

When the system crashes and/or a spontaneous processor interchange occurs, the restore operation fails. Valid announcement files do not appear on the announcement board. To copy the announcements from the active processor's MSS device to the announcement board, restart the command on the newly-active processor. When announcements completely copy to announcement boards, calls do not connect to announcements on the ANN board.

When announcement boards are plugged in or reset, maintenance performs a series of tests, including a DRAM Checksum test. Tests fail due to power losses to boards, resulting in automatic downloading of announcement files.

Output

The following output example is a display of **restore announcements** on a simplex SPE system.

```
restore announcements         Page  1 of  1  SPE A

                 RESTORE ANNOUNCEMENTS

Processor  Command Completion Status         Error Code
SPE-A      Success                                0
```

Field descriptions

Processor	Displays the processor that houses the MSS device used to copy announcement data.
Command Completion Status	Specifies successful completion of the command.
Error Code	System-generated description of a command failure.

resume hardware-group

The **resume hardware-group** command resumes the previous **test hardware-group** command its canceled position. Entering another **test hardware-group** disables the **resume hardware-group** command.

A canceled **test hardware-group** command appears as “canceled” on the **status hardware-group** screen. A resumed **test hardware-group** command appears as “active” on the **status hardware-group** screen.

Action/Object	Qualifier	Qualifier Description	Logins	Defaults	Feature Interactions
resume hardware-group			init inads	none	none

Feature Interactions

Cancel hardware-group

Cancelling a test hardware-group command deactivates the test command. The status hardware-group screen displays the state as “canceled”.

When the **resume hardware-group** command is entered to resume a previously-canceled t**est hardware-group** command, the state of the test command changes to ‘active’ on the s**tatus hardware-group** screen.

save announcements

This command copies announcement data from the announcement board to the MSS. The Card-Mem stores announcements for the system. By default, announcement data writes to the MSS device in a simplex processor (SPE) system, or to both MSS devices in a High or Critical Reliability System. Also, the save announcements command can write to the MSS device on either processor, in a High or Critical Reliability System.

If integrated announcement boards exist, this command is allowed. The system denies the **save announcement** command if no announcement data modules and no NETCON data modules are administered.

The switch notifies administrators if an attempt is made to save announcements to an incompatible flash card. For example, if the command is issued against an old 12V card, this results in the error message: “Pre-G3V9 format memory card inserted.”

Simplex

In a simplex system, no options for the **save announcements** command exist. This command saves announcement files to the MSS device.

Duplex

If no options are specified, the system saves announcements to both processors' MSS devices.

Action/ Object	Qualifier	Qualifier Description	Logins	Default	Feature Interactions
save announcements	*spe-active* *spe-standby*	forces the system to write announcement data to specified devices in active processors. forces the system to write announcement data to specified devices in standby processors. Examples: **save announcements** **save announcements spe-active** **save announcements spe-standby**	init inads craft cust rcust	none	see below

Feature Interactions

WARNING:
Manager I is blocked for other activities until the command completes (up to 45 minutes).

- If no announcement and no NETCON data module are administered, the system denies the command.
- If the announcement data module port is out of service or active (performing an announcement playback), the system denies the command.
- If no announcements are on the board or a user is in an integrated announcements session, the system denies the command.
- If the board is currently uploading or downloading, the system denies the command. Users cannot record integrated announcements after the **save announcements** command commences even though 15 channels are available for announcement playback (one is reserved for uploading and downloading).
- If no tape is in the tape drive or the tape is write-protected, the command aborts during a save. The command also aborts if no NETCON data module is available.
- The save announcements command is not allowed if the MSS is in use. The MSS may be in use by either another user or by maintenance.

- The standby processor must be in service with shadowing enabled, so that the system can save announcements to the standby processor.
- When MSS devices on both processors in High or Critical Reliability Systems are specified, the save announcements command saves announcement data from announcement boards to active MSS devices, then to standby MSS devices. The system reports the status of each save operation to users separately. When one save operation fails, the save operation to another device continues, causing saved announcement data to be inconsistent between MSS devices.
- In case of a failure, technicians make announcement files consistent across both MSS devices. Files become inconsistent due to hardware failures or spontaneous processor interchanges. If announcement files are inconsistent due to hardware failures that occur during the **save announcements** command, error messages display indicating corrective action. Maintenance software that monitors hardware logs hardware errors to maintenance. Then, maintenance software invoke tests to diagnose and attempt corrective action. If maintenance software fails to correct the problem, an alarm raises displaying corrective action.
- The **save announcements** command writes two time-stamped, identical copies of announcement data to selected devices. The time-stamp for both copies is the same. Each copy contains a timestamp and the state of the copy (good or bad).
- If good copies of announcement files are not available, the restore announcements command cannot execute until the **save announcements** command completes. Announcements on the board are still usable.

Output

The following is a display of **save announcements** on a simplex SPE system.

```
save announcements           Page  1 of  1  SPE A

                      SAVE ANNOUNCEMENTS

Processor  Command Completion Status         Error Code
SPE-A      Success                                0
```

Field descriptions

Processor	Displays processors when announcement data writes to its devices. (spe-a and spe-b)
Command Completion Status	This field specifies if the command succeeded.
Error Code	0 = successful save 1 = could not write to active spe device 2 = could not write to standby spe device

save translation

This command allows users to save to tape or memory card the in-memory translation data. This command runs as part of scheduled maintenance and/or on demand by the technician. All translation data in memory during system operation is volatile, meaning that if the switch goes down, the system loses all data.

The switch notifies administrators if an attempt is made to save translation data to an incompatible flash card. For example, if the command is issued against an old 12V card, this results in the error message: “Pre-G3V9 format memory card inserted.”

Simplex

The system defaults to save translation to the memory-card on SPE_A.

Duplex

The system defaults to save translation to the memory-card on both SPE-A and SPE-B.

Action/ Object	Qualifier	Qualifier Description	Logins	Defaults	Feature Interactions
save translations	*spe-active* *spe standby*	Specifies that save translations should occur on the active processor’s MSS device. Specifies that save translations should occur on the standby processor’s MSS device. Examples: **save translation** **save translation spe-active** **save translation spe-standby**	init inads craft cust	Simplex = SPE A Duplex = SPE A & SPE B	Command cannot be performed if data is being changed by an administrative command.

Output

The following is an example of **save translation** on a duplex system. Error Codes are as follows:

- 0 - save successful
- 1 - could not write to the active device
- 2 - could not write to the standby device

```
save translation

                         SAVE TRANSLATION

Processor   Command Completion Status         Error Code
SPE-A       Success                                0
SPE-B       Success                                0

Command Successfully Completed
```

Field descriptions

`Processor`	Identifies the processor carrier where translation data saves. (SPE-A, or SPE-B.)
`Command Completion Status`	Displays a variety of messages, identifying the success or failure of the command.

set boot-image

Use this command to direct the system to use 1 of 2 possible firmware image files on the TN2501AP circuit pack.

Action/ Object	Qualifier	Qualifier Description	Logins	Default	Feature Interactions
set boot-image	***location***	The physical location of the circuit pack (UUCSS)	init inads craft customer		
	1	Directs the system to use the Image 1 firmware file			
	2	Directs the system to use the Image 2 firmware file			
		Example			
		set boot-image board 1B08			

NOTE:
You must reseat the circuit pack before the firmware file specified in this command becomes the active boot image.

set ethernet-options

Use this command to manually or automatically set the ethernet connection parameters.

NOTE:
The ethernet port must be both administered and busied out before you can issue this command.

Action/Object	Qualifier	Qualifier Description	Logins	Defaults	Feature Interactions
set ethernet-options	***location***	The physical location of the circuit pack (UUCSS)	init inads craft customer		

```
set ethernet-options 1C07

                              SET ETHERNET OPTIONS

Auto Negotiation: y

           Speed:

          Duplex:
```

Screen 8-26. Set Ethernet Options screen

Field descriptions

Auto Negotiation

y means that the system automatically negotiates the highest possible network speed.

n means that you must manually assign the Speed and Duplex fields.

NOTE:
If you set the Auto Negotiation field to **n**, the Speed and Duplex fields do not display.

Speed

10Mbps

100Mbps

Duplex

Half

Full

set expansion-link

The set expansion-link command sets the Expansion-Interface Link between:

- the PPN and an EPN
- two EPNs to a specific Interface Link circuit pack between PPN and EPN.

NOTE:
This command can corrupt any active data links between the PPN and an EPN or between two EPNs.

Action/Object	Qualifier	Qualifier Description	Logins	Default	Feature Interactions
set expansion-link	***link-identifier***	1A01, 1A02, 1B01, 1B02, 2A01, 2A02, 2B03, 3A01, 3A02, 3AB02, 3B03). Examples: **set expansion-link 02a01** **set expansion-link 3a02**	init inads craft	none	none

set options

This command enables the technician (that is, remote user with INADS permission) to select which types of maintenance categories report alarms automatically and which types require customer call-in. Judicious use of this command can reduce the number of ineffective alarms to the TSC. For effective results, technicians should use the **set options** command default settings specified in this section. Technicians should not change these settings. Special circumstances (for example, special studies) may require temporary changes under the guidance of Tiers 3 and 4.

NOTE:
Alarms do not upgrade.

Action/Object	Qualifier	Qualifier Description	Logins	Defaults	Feature Interactions
set options			init inads	see below	none

Form Input

The following example is a display of **set options**.

```
set options                                                Page 1 of  8

                      ALARM REPORTING OPTIONS

                                                Major  Minor
                   On-board Station Alarms:  w     w
                  Off-board Station Alarms:  w     w
     On-board Trunk Alarms (Alarm Group 1):  y     y
    Off-board Trunk Alarms (Alarm Group 1):  w     w
     On-board Trunk Alarms (Alarm Group 2):  w     w
    Off-board Trunk Alarms (Alarm Group 2):  w     w
     On-board Trunk Alarms (Alarm Group 3):  w     w
    Off-board Trunk Alarms (Alarm Group 3):  w     w
     On-board Trunk Alarms (Alarm Group 4):  w     w
    Off-board Trunk Alarms (Alarm Group 4):  w     w
                    On-boar Adjunct Alarms:  w     w
                          Off-board Alarms:  w     w
                      Off-board DS1 Alarms:  w     w
                  Off-board PI-LINK Alarms:  w     w
                  Off-board Alarms (Other):  w     w
               Memory Card Capacity Alarms:        y
```

```
set options                                                Page  2 of  8

                         TRUNK GROUP ALARM OPTIONS
                                (Alarm Group)

01: 1  11: 1  21: 1  31: 1  41: 1  51: 1  61: 1  71: 1  81: 1  91: 1
02: 1  12: 1  22: 1  32: 1  42: 1  52: 1  62: 1  72: 1  82: 1  92: 1
03: 1  13: 1  23: 1  33: 1  43: 1  53: 1  63: 1  73: 1  83: 1  93: 1
04: 1  14: 1  24: 1  34: 1  44: 1  54: 1  64: 1  74: 1  84: 1  94: 1
05: 1  15: 1  25: 1  35: 1  45: 1  55: 1  65: 1  75: 1  85: 1  95: 1
06: 1  16: 1  26: 1  36: 1  46: 1  56: 1  66: 1  76: 1  86: 1  96: 1
07: 1  17: 1  27: 1  37: 1  47: 1  57: 1  67: 1  77: 1  87: 1  97: 1
08: 1  18: 1  28: 1  38: 1  48: 1  58: 1  68: 1  78: 1  88: 1  98: 1
09: 1  19: 1  29: 1  39: 1  49: 1  59: 1  69: 1  79: 1  89: 1  99: 1
10: 1  20: 1  30: 1  40: 1  50: 1  60: 1  70: 1  80: 1  90: 1
```

NOTE:
Remaining Trunk Group information displays on pages 3-8, and is not documented in this Manual.

The first page of the Alarm Reporting Options Form, provides the following alarm options: the four trunk alarm severity groups, the adjunct alarms, off-board DS1 alarms, and PI-LINK alarms, memory card translation capacity alarms, and other off-board alarms. The second page, known as the Alarm Reporting Options Form, provides alarm severity groups to each trunk group.

1. The following alarm options are available:

   - Minor

     Maintenance testing discovers raised alarms, downgrades them to minor alarms, and deactivates alarmed resources. LEDs on the port board and maintenance board follow standard minor alarm LED protocol and call receiving OSSs.

   - Warning

     Maintenance testing discovers raised alarms, downgrades them to warnings and deactivates alarmed resources. The Alarm Log pinpoints customer-reported trunk or station problems. Alarm LEDs light on the port circuit pack and Maintenance circuit pack as before, but no attendant LEDs or stations reporting alarms are affected. No call is placed to INADS.

   - Report

     The report option treats alarms the same as warnings with one exception: alarms report to INADS with a special WARNING category. When this type of alarm is received, INADS logs the occurrence and creates a trouble ticket or closes it immediately. Retry strategy for this type of call is similar to normal Major or Minor alarm reports. However, the acknowledgment LED on the attendant console or alarm reporting station does not reflect the status of the call.

   - Yes

     Alarms raise normally without filtering alarm data.

   - No

     Alarms that raise on trunks, stations, or adjuncts in this category drop. Error information displays as before, but alarm is evident. LED is inactive and calls are not sent to INADS. Because resources are deactivated without any record, this option is recommended only when other options do not provide desired results.

Technicians can administer alarm options on a system-wide basis for the following categories:

- Major on-board station alarms
- Minor on-board station alarms
- Major off-board station alarms
- Minor off-board station alarms

Trunk alarms have four alarm severity groups with administrable alarm options in the categories listed below. For G1, technicians can administer alarm options on a system-wide basis for the following categories:

- Major on-board trunk alarms
- Minor on-board trunk alarms
- Major off-board trunk alarms
- Minor off-board trunk alarms

Technicians assign alarm severity options to the following Adjunct categories:

- Major on-board adjunct alarms
- Major off-board adjunct alarms
- Minor on-board adjunct alarms
- Minor of-board adjunct alarms

Technicians can administer options for Minor off-board DS1 Interface circuit pack alarms and Minor off-board Memory Card Capacity Alarms on a system-wide basis.

The system inspects alarm reporting options information in the Alarm Reporting Options Form as translation data and preserves it through all restart levels.

This command affects the MO alarming listed below. Neither the trunk nor the station category applies to alarms raised on the common portion of the circuit pack.

If the option associated with the alarm type is set to “n,” the system drops the alarm report. Alarm error information remains intact, but no records of alarms and no LEDs light on the port circuit pack, the Maintenance circuit pack, the attendant console, or alarm reporting station to indicate a problem.

If technicians set the option “warning” or “report,” port circuit pack LEDs and LEDs on the Maintenance circuit pack are affected the same as warning alarms.

Default parameters are:

- The system downgrades all station, trunk (except on-board trunk alarms), and Minor DS1-BD alarms to warning alarms.
- On-board Major and Minor trunk alarms, and the Memory Card Capacity alarm continue to raise alarms and report to INADS.

Station MOs Affected By This Command

NOTE:
Although alarms on some MOs appear as warnings, they should be investigated with user-reported problems.

- Analog Lines (ANL-LINE, ANL-NE-L, ANL-16-L)
- Digital Lines (DIG-LINE)
- Hybrid Lines (HYB-LINE)
- ISDN-BRI Lines (BRI-PORT, BRI-SET)

If more than 75% of the members of the trunk group alarm, minor alarms escalate to major alarms. If the trunk category option is set to “warning,” “minor,” “report,” or “no,” this no longer happens. Maintenance reactivates individual trunk members according to Major and Minor alarm criteria.

Trunk MOs Affected By This Command:

NOTE:
Although alarms on these MOs may appear as warnings, the alarms should be investigated with user-reported problems.

- Auxiliary Trunks (AUX-TRK)
- Central Office Trunks (CO-TRK)
- Direct Inward Dialing Trunks (DID-TRK)
- Direct Inward and Outward Dial Trunks (DIOD-TRK)
- DS1 Central Office Trunks (CO-DS1)
- DS1 Direct Inward Dialing Trunks (DID-DS1)
- DS1 Tie Trunks (TIE-DS1)
- ISDN Trunks (ISDN-TRK)
- Tie Trunks (TIE-TRK)

Circuit Pack MOs Affected By This Command

NOTE:
Although alarms on some MOs appear as warnings, the alarms should be investigated with user-reported problems.

NOTE:
The alarm severity of group one downgrades trunks that are not members of Trunk Groups, (for example, PCOLs).

- DS1 Interface Circuit Pack (DS1-BD)

Adjunct-Related MOs Affected By This Command

NOTE:
Although alarms on some MOs appear as warnings, the alarms should be investigated with user-reported problems.

- ASAI Adjunct (ASAI-ADJ)
- Avaya Adjunct Port (ATT-PORT)
- Ethernet ASAI Port (LGATE-PT)
- Ethernet ASAI Adjunct (LGATE-AJ)
- Ethernet Avaya Port (ATTE-PT)
- Ethernet Avaya Adjunct (ATTE_AJ)
- ISDN-BRI Ports connected to Adjuncts (ABRI-PORT)

Adjuncts are administered as stations; however, the administration of alarm severity for the station alarm group does not affect alarm severity levels for adjuncts. Similarly, the administration of alarm severity for the adjunct alarm group does not affect the alarm severity levels for other stations.

PI-Link and Associated Link MOs Affected by this Command:

NOTE:
Although alarms on some MOs appear as warnings, the alarms should be investigated with user-related problems.

- See Processor Interface Link [“PI-LINK (Processor Interface Link)”] for other associated Link Maintenance Objects.

Memory Card MOs Affected by This Command

NOTE:
While this option does not automatically downgrade CAP-MEM alarms, changes to this options may downgrade alarms to warnings. This alarm raises when memory card translation capacity exceeds 98% and is intended to alert Services that larger flash cards may be required.

- Memory Card Capacity (CAP-MEM)

Other MOs Affected by this Command

NOTE:
Although alarms on some MOs appear as warnings, the alarms should be investigated with user-related problems.

- EPN Maintenance Circuit Pack (MAINT)
- Expansion Interface (EXP-INTF)
- ISDN-PRI Signaling Group (ISN-SGR)
- Journal Printer (JNL-PRNT)
- PMS Link (PMS-LINK)
- PMS log printer (PMS-LOG)
- Primary CDR Link (PRI-CDR)
- Secondary CDR Link (SEC-CDR)
- SPE Select Switches (SPE-SELEC)
- Synchronization (SYNC)
- System Communication Interface (PI-SCI)
- System Printer (SYS-PRNT)
- TDM Clock (TDM-CLK)
- Tone Generator Circuit Pack (TONE-BD)

set signaling-group

This command upgrades secondary D-channel in specified signaling groups to primary D-channels. Current primary D-channel then revert to secondary D-channels.

A signaling group is a collection of B-channels that designate single D-channels or a set of D-channels signals over an ISDN-PRI.

Action/Object	Qualifier	Qualifier Description	Logins	Defaults	Feature Interactions
set signaling-group	***group identifier***	administered number associated with each signaling group. Examples: **set signaling-group 1** **set signaling-group 2**	init inads craft	none	none

set synchronization

This command sets DS1 trunks or active tone/clock circuit packs that supply references for synchronization. The **set synchronization** command works after the **disable synchronization** command disables synchronization. Technicians may administer DS1 trunks or active tone/clocks with the **set synchronization** command. DS1 or tone/clocks remain synchronization references until the **set synchronization** command runs with another board or until the **enable synchronization** command runs.

After the **enable synchronization** command runs, administered primary or secondary synchronization sources become synchronization references. If no primary or secondary source is administered, synchronization uses active tone/clock boards as synchronization references after synchronization is enabled.

The synchronization subsystem provides error-free digital communication between the switch and other PBXs, COs, or customer premise equipment. System components involved in synchronization include: TDM bus clock, DS1 trunk board, maintenance and administration software resident in the SPE.

Action/Object	Qualifier	Qualifier Description	Logins	Defaults	Feature Interactions
set synchronization	***location***	Physical location: **PCsspp** (DS1 trunk or active tone/clock) that supplies a synchronization reference. Examples: **set synchronization 01c08** **set synchronization 02a01** **set synchronization 01a** **set synchronization 02c**	init inads craft	none	none

set tdm

This command establishes the TDM bus on a port network that houses control channels and dedicated tones.

Action/ Object	Qualifier	Qualifier Description	Logins	Defaults	Feature Interactions
set tdm	***port network***	specifies the Port Network number of the TDM bus.	init inads craft	none	see below
	pn number bus	(“a” or “b”) specifies desired half of the TDM bus. Configure each 512 time slot TDM bus as two duplicate 256 time slot buses, allowing duplication of control channels and dedicated tone time slots.			
	bus override	A port network number (1 - 3) forces the setting of a deactivated bus, or a bus whose dedicated tone time slots are active. Examples: **set tdm port-network 2 bus a** **set tdm port-network 2 bus b override**			

Feature Interactions

New calls go to time slots reserved for tones on the bus that have not other time slots when:

- Time slots on a specified bus are in use
- Dedicated tone time slots are on the other half of the bus

A **set** command to buses that have calls on dedicated tone time slots drops these calls.

set time

This command allows system technicians to change the day of the week, the day of the month, the month, year, hour, and minute. The second field resets to zero (0) whenever the time on the clock is altered, but cannot be modified by the technician. The day of the week, entered as a text string, translates to an integer for internal storage.

The system clock time remains the same if no changes are entered on the form.

Action/ Object	Qualifier	Qualifier Description	Logins	Defaults	Feature Interactions
set time			init inads craft cust rcust bcms browse	The system assigns a time, if the system clock is not set	The date and time are available to software from a system primitive.

Output

The following example is a display of **set time**.

```
set time                                                    Page 1 of 1

                              DATE AND TIME

          DATE

            Day of the Week: Sunday          Month: October
           Day of the Month: 24               Year: 1999

          TIME

            Hour: 8  Minute: 16     Second: 31     Type: Standard
                      Daylight Savings Time Rule: 0

  WARNING: Changing the date or time will impact BCMS, CDR and MEASUREMENTS
```

NOTE:
When the system clock is upgraded from an earlier release, the daylight savings time rule on the **set time** screen defaults to **0** (no rule). While you can change the daylight savings time rule, the system clock is not adjusted automatically until the next transition of the rule.

Field descriptions

`Day of the Week:`	Monday through Sunday.
`Day of the Month:`	1-31. The system also checks for leap year.
`Month:`	January through December.
`Year:`	1970-2999
`Hour:`	0-23.
`Minute:`	0-59
`Second:`	The system sets this field to zero when the time of day clock is set.
`Type`	`Daylight-savings` = daylight savings time `Standard` = standard time
`Daylight Savings Rule`	The daylight savings time rule number (0 to 15). Rule 0 is no daylight savings time, and rule 1 defaults to U.S. daylight savings time rule.

set tone-clock

This command sets the active tone/clock for a PN that has a duplicated tone/clock circuit pack. Technicians should reset the default active tone clock in each PN after using the **set tone-clock** command. If it is not in use, a single failure can cause an unnecessary service outage. The schedule maintenance tone-clock switch option does not reset the tone-clock to the default active if it was not active at the beginning of the test.

Action/ Object	Qualifier	Qualifier Description	Logins	Defaults	Feature Interactions
set tone-clock	***location***	Physical location (**PC**) of the tone/clock to be tested	init inads craft	1 (one)	none
	override	Forces the set command into effect regardless of the tone/clock circuit pack's health. Examples: **set tone-clock 01b** **set tone-clock 1b** **set tone-clock 01b override** **set tone-clock a**			

set vector

This command specifies restart levels for core dumps. This command places core dumps on primary Mass Storage System (a tape in a tape system and core dump memory cards in a memory card system) devices for later examination. The **set vector** command allows technicians to tailor restart levels that copy memory to primary Mass Storage System devices.

NOTE:
Software never requests an extended reboot.

To force an immediate core dump, in a simplex or duplex system, technicians should set the appropriate bit using this command, then enter the **reset system** command at a level that forces core dumps corresponding to set vector bits.

When a system restart occurs in a simplex Switch Processing Element (SPE) system with the corresponding vector bit set, the core dump writes to secondary storage (the primary MSS device). Once core dumps write, the vector clears and the restart executes. **This command disrupts service in a simplex system.**

The active SPE executes a core dump when:

- A system restart occurs on the active SPE in a High or Critical Reliability system with the corresponding vector bit set.
- The active SPE-active option is selected when the vector bit is set.

CAUTION:
This command disrupts service in a simplex system.

The active SPE executes a core dump when:

- A system restart occurs on the active SPE in a High or Critical Reliability system with the corresponding vector bit set.
- The SPE-standby option is selected when the vector bit is set.

The active SPE executes a core dump when:

- A system restart occurs on the active SPE in a High or Critical Reliability system with the corresponding vector bit set.
- The active SPE-maint option is selected when the vector bit is set.

The vector clears after all core dumps.

Action/ Object	Qualifier	Qualifier Description	Logins	Defaults	Feature Interactions
set vector	***spe-standby*** ***spe-active*** ***spe-maint***	see below. SIMPLEX SYSTEM Examples: **set vector f** **set vector 9** DUPLEX SYSTEM Examples: **set vector f spe-standby** **set vector f spe-active** **set vector f spe-maint** **set vector 9**	init inads craft	spe-standby (High or Critical Reliability Systems)	none

Table 8-8. Vector-Condition Mapping

Value	WARM	COLDII	COLDI	REBOOT
0	n	n	n	n
1	y	n	n	n
2	n	y	n	n
3	y	y	n	n
4	n	n	y	n
5	y	n	y	n
6	n	y	y	n
7	y	y	y	n
8	n	n	n	y
9	y	n	n	y
a	n	y	n	y
b	y	y	n	y
c	n	n	y	y
d	y	n	y	y
e	n	y	y	y
f	y	y	y	y

spe-standby The default option for a High or Critical Reliability System. If a restart occurs on active SPEs and the corresponding vector bit is set, a core dump occurs on the standby SPE (after the standby SPE has performed a memory refresh).

spe-active Option for a High or Critical Reliability System; default for simplex SPE systems. If a restart occurs on active SPEs and the corresponding vector bit is set, core dumps occur on the active SPE. **This option disrupts service.**

spe-maint Available for High or Critical Reliability Systems. If restarts occur on active SPEs and the corresponding vector bit is set, core dumps occur on standby SPEs without the standby SPE a memory refresh.

status access-endpoint

This command displays diagnoses internal software and helps to locate facilities with which Access Endpoints communicate.

Action/ Object	Qualifier	Qualifier Description	Logins	Defaults	Feature Interactions
status access-endpoint	***extension***	extension number of the access endpoint	init inads craft cust nms browse	none	none
	print	prints reports to SAT printers. Examples: **status access-endpoint 25012** **status access-endpoint 77868** **status access-endpoint 66078 print**			

Output

The following output example is a display of the **status access-endpoint 22502** command. Assume that access endpoint ports for extension 22502 are in cabinet 1, carrier C, slot 11, circuit 1 to 6 — that access endpoints are connected on an active call to ports 7 to 12 of the board in location 1B19 (cabinet 1, carrier B, slot 19). This means that port 01C1101 connects to 01B1907, port 01C1102 connects to 01B1908, and port 01C1103 connects to 01B1909.

```
status access-endpoint 22502              page 1 of 1

      ACCESS-ENDPOINT STATUS


             Extension: 22502
       (Starting) Port: 01C1101
    Communication Type: wideband
                 Width: 6

         Service State: in-service/active

       Connected Ports: 01B1907 01B1908 01B1909
                        01B1910 01B1911 01B1912


Command Successfully Completed
```

Field descriptions

Extension	The extension of the access endpoint to be displayed.
(Starting) Port	Port locations of the access endpoint. For wideband access endpoint, the location shown is that of the starting port.
Communication Type	The valid voice and data communication type that the access endpoint is administered. The options are: 56k-data, 64k-data, voice-grade-data, and wideband.
Width	For communication types of 56k-data, 64k-data, and voice-grade data, the width value is 1. For communication type of wideband, this field displays the number of DS0s that makes up the access endpoint.
Service State	Whether the access endpoint is in-service or out-of-service. One of the following states displays: in-service/active, in-service/idle, and out-of-service.
Connected Ports	Port location connected to the access endpoint for an active call. For wideband access endpoint connection, all ports connected to the wideband access endpoint are listed.

status administered-connection

The **status administered-connection** provides automatic end-to-end connections between two access/data endpoints.

Action/ Object	Qualifier	Qualifier Description	Logins	Default	Feature Interactions
status administered -connection	***ac number***	number assigned to an administered connection.	init inads craft cust rcust bcms browse	none	none
	print	reports print to SAT printers.			
		Example:**status administered-connection 1** **status administered-connection 50** **status administered-connection 128 print**			

Output

The following output example is a display of **status administered-connection 3**.

```
status administered-connection 3                                  page 1 of 1

                  ADMINISTERED-CONNECTION STATUS

   Connection Number:
             Enabled?
           Originator:
          Destination:
    Connection State:
       Failure Cause:
   Number of Retries:
     Auto Restorable?
```

Field descriptions

`Connection Number`	Number assigned to the administered connection.
`Enabled`	Is administered connection enabled? (y/n).
`Originator`	Extension of originating access/data endpoint.
`Destination`	Destination address used to route administered connections.
`Connection State`	Current status of the administered connection. (connected, restored, failed, waiting to retry, attempting to restore, attempting to connect, not scheduled, and disabled.
`Failure Cause`	Reason that the administered connection is attempting to connect, to restore, or failed to restore. If the administered connection was scheduled to be active but is disconnected, this field shows the most recent failure reason.
`Number of Retries`	Number of consecutive failed establishment attempts.
`Auto Restorable`	When an administered connection is connected, this field indicates if auto restoration attempts when a failure occurs.

status attendant

This command diagnoses internal software. This command help to locate facilities to which the attendant console communicates.

Action/ Object	Qualifier	Qualifier Description	Logins	Defaults	Feature Interactions
status attendant	***console number*** print	number assigned to an attendant (1 –16). Report sent to printer. Examples: **status attendant 1** **status attendant 2** **status attendant 2 print**	init inads craft cust rcust bcms browse	none	none

Output

The following output example is a display of **status attendant 1**.

```
status attendant 1

       ATTENDANT STATUS

Console Number: 1            Service State: in-service/night service
          Port: 01C1106   Maintenance Busy? no
Connected Ports:

Command successfully completed
```

Field descriptions

`Console Number`	Number assigned to the attendant (1-16).
`Port`	Port location of the attendant (cabinet-carrier-slot-circuit).
`Service State`	In-service/idle, in-service/active, out of service, or disconnected.
`Usage State`	Idle or active.
`Maintenance Busy State`	Is maintenance testing the object? (y/n)
`Connected Ports`	Port locations to which the attendant is communicating (cabinet-carrier-slot-circuit).

status audits

This command displays results of Data Relation Audits that are built into the switch. Data Relation Audits check for inconsistencies between selected data items in the switch, and report inconsistencies. Data Relation Audits are useful during development and testing phases of projects to uncover software errors. In the field they help the switch to recover from data corruption before service is interrupted.

This command displays the date and time that the requested interval begins, the number of times that the full sequence of audits executes (audit cycles), and status information about each audit that detected a problem or aborted during the interval. The status information contains:

- The name of the audit
- The number of times that an audit ran and corrected an error
- The number of times that an audit ran and detected an irreparable error
- The number of times that an audit ran and aborted
- The date and time that the audit first detected a problem (only for cumulative)
- The time of the most recent error detected by the audit (only for cumulative).

Audit data information cumulates from the last reboot or the last **clear audits cumulative** command, and for peak hours since the last reboot or the last **clear audits peak-hour** or **clear audits cumulative** commands.

NOTE:
Single process restarts, warm starts, cold 2 restarts, cold 1 restarts, or processor interchanges do not clear this data.

Audits can execute directly using the “test MO” command (for example, **test MO l 8192 p 512 t 0** executes the Station Connections Audits, audit lnames and numbers (pnames) included in the Table Of Audits.) When the “test MO” command executes an audit, report results display on the screen. In general, errors discovered from a demand tests are not logged in the error logs. To be consistent with other error logging, and to avoid confusion, errors that are discovered from a demand test that executes an audit are not displayed.

The screen does not automatically update. It reflects the system at the time of the request.

Action/ Object	Qualifier	Qualifier Description	Logins	Default	Feature Interactions
status audits	***peak-hour***	Data collected since the last reboot or since the last **clear audits cumulative** command.	init inads	none	see below
	cumulative	Data for the peak hour since the last reboot or since the last **clear audits cumulative** or **clear audits peak-hour** command. Determined by summing			
	print	Prints report.			
	schedule	Schedule execution of the command. The command is then placed in the command queue and executed at the specified time. The information displayed by the command is sent to the system printer instead of the screen.[1] Examples: **status audits cumulative** **status audits cumulative print** **status audits cumulative schedule** **status audits peak-hour** **status audits peak-hour print** **status audits peak-hour schedule**			

1 Refer to the Report Scheduler and System Printer feature specification for more details.

Feature Interactions

The **clear audits** command affects the data displayed by **status audits cumulative** and **status audits peak-hour**. The **clear audits cumulative** command clears data collected to date, resets the start time kept for that data, and clears peak hour data. The **clear audits peak-hour** command clears data kept for the peak hour so that a new peak hour can be established.

When **schedule** is specified, a form to schedule command execution appears. See the Report Scheduler and System Printer feature specification for details.

Output

The following example is a display of **status audits**.

```
status audits cumulative

                         AUDIT STATUS INFORMATION

Start Date: 13:00 MON MAR 19 1990       # of Audit Cycles Completed: 67532

Audit      # Cycles    # Cycles Could    # Cycles       First      Most Recent
Name       Fixed Data   Not Fix Data   Audit Aborted    Error         Error

HTLK            0          *****             0       03/22/10:14  06/24/16:03
CR-AUDIT      135            0               0       03/22/10:12  06/10/19:17
HU-CALLS        2            0               0       03/22/10:12  03/22/10:20
SE-CALLS        1            0               1       03/22/10:13  03/22/19:14
TTR-SID         1            0               0       05/01/02:17  05/01/02:17
CO-CALLS        1            0               0       05/01/02:16  05/01/02:16
DE-CALLS        1            0               0       03/22/10:12  03/22/10:12
TR-QUE          1            0               0       04/05/13:05  04/05/13:05
CTRK            0            1               0       03/22/10:12  03/22/10:12
AT-ADM          1            0               0       03/22/10:12  03/22/10:12
CO-ADM          1            0               0       03/22/10:13  03/22/10:13
PC-ADM          1            0               0       04/05/15:05  04/05/15:05
PRI-USR (SCH)   1            0               0       03/22/10:14  03/22/10:14

Command successfully completed
```

```
status audits peak-hour

                         AUDIT STATUS INFORMATION

 Start Date: 10:00 MON MAR 22 1990    # of Audit Cycles Completed:  25

 Audit        # Cycles    # Cycles Could      # Cycles
 Name        Fixed Data    Not Fix Data     Audit Aborted
 HTLK             0             25                0
 HU-CALLS         2              0                0
 CR-AUDIT         1              0                0
 DE-CALLS         1              0                0
 CTRK             0              1                0
 AT-ADM           1              0                0
 CO-ADM           1              0                0
 SE-CALLS         0              0                1
 PRI-USR (SCH)    1             0                 0

 Command successfully completed
```

Audit information displays with one line of data displayed audit that has detected an error or aborted. Audits that did not detected any errors or aborted do not display. The output sorts in descending order, based on the sum of the values in the `# Cycles Fixed Data`, `# Cycles Could Not Fix Data`, and `# Cycles Audit Aborted` fields.

Field descriptions

`Start Date`	Date and time that interval begins. “cumulative” = date and time of the last reboot or execution of **clear audits cumulative**. “peak-hour” = date and time of the beginning of the peak hour since the last reboot or execution of a **clear audits cumulative** or **clear audits peak-hour**.
`# of Audit Cycles Completed`	Number of audit cycles completed in the specified interval. (0 – 999999) Asterisks indicate numbers that exceed 999999. The switch executes audits in a set order. After all audits execute, the switch restarts the sequence. Since this field shows the number of completed audit cycles, it is possible that individual audit values, can be larger than the values described below (if the switch is partially through another audit cycle). Audit Cycles numbers do not apply to these audits that execute as part of scheduled maintenance.
`Audit Name`	Audit’s name that detected an error or aborted. A few audits do not run in the normal audit sequence. Instead, they execute as part of scheduled maintenance and are marked with “(SCH)” following the audit name.
`# Cycles Fixed Data`	Number of times that the audit ran, in the specified interval, and found a fixable problem. (0–65534) Asterisks are used form numbers that exceed 65534.
`# Cycles Could Not Fix Data`	Number of times that the audit ran, in the specified interval, and found an unfixable problem. The audited switch data is inconsistent when this happens. (0–65534) Asterisks are used for numbers that exceed 65534.
`# Cycles Audit Aborted`	Number of times that the audit ran, in the specified interval, and aborted due to an internal error. (0–65534) Asterisks are for numbers that exceed 65534.
`First Error`	Date and time that the audit first detected fixed data, could not fix data or audit aborted problems since the last “clear audits cumulative” command. Format: MM:DD:hh:mm (for example, 03/27/14:31 for 2:31 pm, March 27th). This field appears with the “status audits cumulative” display.
`Most Recent Error`	Date and time that the audit last detected fixed data, could not fix data or audit aborted problems since the last “clear audits cumulative” command. Format: MM:DD:hh:mm (for example, 03/27/14:31 for 2:31 pm, March 27th). This field appears with the “status audits cumulative” display.

Table of Audits

The following table shows the names of the audits that are run as part of time available maintenance, the audit number (pname) and a short description of each audit. These audits execute using lname MO_DR_AUDIT (8192). These audits may execute using the *test MO* command with lname 8192, pname “audit number,” and test number 0 (for example, *test MO l 8192 p 607 t 0* executes the AC state audit).

Audit Name	Audit Number	Description
AC-ISG	607	AC state audit
ADJUSR	595	Adjunct user record audit
ADMTRM	559	Administration terminal audit
ANUR-A	589	Announcement user record audit
AN-ADM	574	Announcement group administration audit
AN-CALLS	572	Announcement group calls audit
AN-QUE	577	Announcement group queue audit
AQSA	545	ACB queue slot allocation audit
ASLINK	606	ASAI link status audit
ASYLED	605	ASAI yellow LED audit
ATACT	558	Attendant active audit
ATAV	557	Attendant availability audit
ATDRCNT	576	Attendant resource count audit
AT-ADM	529	Attendant group administration audit
AT-CALLS	515	Attendant group calls audit
AT-QUE	523	Attendant group queue audit
AUR-A	540	Attendant user record audit
AU-CIDP	596	Announcement user cid/port audit
AWOH-UR	614	Admin Without Hardware Split User Record Audit
B2B-TAB	617	Board-to-Board Link Audit
BR-CALLS	629	Bridged extensions audit
BUTLK	560	Button lock audit
CALK	569	Coverage answer member lock audit
CATT	527	Attendant connections audit
CCTRTAB	624	Call Classifier Tone Receiver Table Audit
CCTR-SID	600	Call classifier tone receiver audit

Continued on next page

Audit Name	Audit Number	Description
CDM	528	Data module connections audit
CO-ADM	530	Coverage group administration audit
CO-CALLS	516	Coverage group calls audit
CPROC	585	Call process/call record audit
CPTRTAB	623	Call Progress Tone Receiver Table Audit
CPTR-SID	601	Call progress tone receiver audit
CPWAKEUP	586	Wake up call process audit
CR-AUDIT	513	Call processing data audit
CSR-A	544	Connection service record audit
CSTAT	512	Station connections audit
CTRK	526	Trunk connections audit
DA-CALLS	583	DAP call record audit
DA-MSG	584	DAP message buffer audit
DE-ADM	531	Data extension group administration audit
DE-CALLS	517	Data extension group calls audit
DMLK	563	Data module lock audit
DUR-A	543	Data user record audit
DXLK	567	Data extension member lock audit
EI-TAB	621	Expansion Interface Table Audit
FHT	554	Facility status hundreds table audit
FTED	553	Facility status tracked user audit
FTING	552	Facility tracking user audit
FTSRA	593	Fiber time-slot record allocation audit
GIP-TIMER	609	GIP Timer Audit
HTLK	568	Hunt member lock audit
HU-ADM	532	Hunt group administration audit
HU-CALLS	518	Hunt group calls audit
HU-QUE	524	Hunt group queue audit
IAP-CALLS	590	IAP call record audit
IAP-URB	591	IAP user record audit
IM-HMM	579	HMM image table audit
INST-LNK	604	Instigator/down-link user link audit
ISGR-A	594	ISG call record audit

Continued on next page

Audit Name	Audit Number	Description
LOG-A	570	MDM error/alarm log audit
MAP-HMM	580	HMM map status table audit
MCT-ADM	561	Malicious call trace administration audit
MIS-FAC	587	MIS facility state audit
MP-ADM	575	Modem pool group administration audit
MP-CALLS	573	Modem pool group calls audit
MSGQ-HMM	582	HMM map request queue audit
MST-LOG	549	MST Logging Buffer Audit
MST-STATE	546	MST State Audit
MS-CALLS	588	MISAP call record audit
MUV	555	Message user verification audit
MWIA	550	Message waiting indicator audit
MWL-NOAP	599	Message waiting lamp no AP audit
PA-ADM	533	Paging group administration audit
PA-CALLS	519	Paging group calls audit
PCLK	566	PCOL member lock audit
PC-ADM	535	Personal CO line group administration audit
PC-CALLS	521	Personal CO line group calls audit
PINC-TAB	612	Packet Inter-Port Network Connection Sub-Table audit
PI-ADM	534	Pickup group administration audit
PLIP-LNK	602	LIP link audit
PN-HMM	578	HMM pname table audit
PRI-CR	598	PRI call record audit
PRI-TBUF	592	TSCUUI buffer audit
PUR-A	541	Phantom user record audit
SDSBUF	581	Service dispatcher stim buffer audit
SDSID	571	Service dispatcher SID audit
SE-ADM	538	Terminating extension group administration audit
SE-CALLS	537	Terminating extension group calls audit
STNLK	562	Station lock audit
SUR-A	539	Station user record audit
S-INC-TAB	611	Service Inter-Port Network Connection Sub-Table audit
S-PT-TAB	610	Service-Port Connection Sub-Table audit

Continued on next page

Audit Name	Audit Number	Description
S-TAB	620	Service Table Audit
TEGLK	565	TEG member lock audit
TKLK	564	Trunk lock audit
TONE-TS	608	Tone Time Slot Subtable Audit
TR-ADM	536	Trunk group administration audit
TR-CALLS	522	Trunk group calls audit
TR-QUE	525	Trunk group queue audit
TSC-PRI	520	ISDN-PRI TSC resource audit
TSRA	547	Time slot record allocation audit
TTI-STATE	618	TTI State Audit
TTI-TRANS	619	TTI Translation Audit
TTR-SID	514	Touch tone receiver audit
TTR-TAB	622	Touch Tone Receiver Table Audit
TUR-A	542	Trunk user record audit
T-TS-TAB	613	Tone Time Slot Connection Sub-Table Audit
UGMA	551	User group membership audit
UPUSR-LNK	603	Up-link user link record audit
URMB	548	User record maintenance busy audit
X25-CHAN	615	X.25 Channel Status Audit
X25-LINK	616	X.25 Link Status Audit

Table 8-9 on page 8-310 shows the names of audits that run as part of scheduled maintenance, the audit number (pname) and a description of each audit. The audits execute using lname MO_SCH_AUDIT (8193). These audits may execute using the *test MO* command with lname 8193, pname “audit number,” and test number 0. For example, *test MO l 8193 p 556 t 0* executes the Message Waiting Lamp Audit audit.

Table 8-9. Scheduled Maintenance Audits

Audit Name	Audit Number	Description
MWL	556	Message Waiting Lamp Audit
PRI-USR	597	PRI user record audit
SUR-FREE	625	Station User Record Free List Audit

status bri-port

This command displays the service state, maintenance state and layer 1 state of an ISDN-BRI port. This form also displays information about point-to-point signaling links that transport over the port.

Action/Object	Qualifier	Qualifier Description	Logins	Defaults	Feature Interactions
status bri-port	***location*** print	Physical location: **PCsspp** Report sent to printer. Examples: **status bri-port 1c0701** **status bri-port 1c0701 print**	init inads craft cust nms browse	none	none

Output

The following example shows the output from **status bri-port 1c1701**.

```
status bri-port 1c1701                Page 1 of  1  SPE A

                          STATUS BRI-PORT

             Port: 01C1701
    Service State: in-service
Maintenance Busy?: no
    Layer 1 State: activated

     TEI Value  Layer2 State   Endpt Extension   Endpt SPID   Service SPID?

Link1   64      13-established      1010            1010

Link2

Link3
```

Field descriptions

`Port`	ISDN-BRI port address.
`Service State`	ISDN-BRI port is “in-service” or “out-of-service.”
`Maintenance Busy`	Specifies if maintenance testing is executing on the ISDN-BRI port (y/n)

`Layer 1 State`

BRI Layer 1 (physical) state on the port. Valid states are “activated,” “pend-activation,” and “deactivated.”

- “activated” state = layer 1 frames are passing between the port and BRI endpoints.
- “pend-activation” state = the port is in-service, the layer 1 interface device is on, layer 1 frames are sending to the BRI endpoints connected to this port, but BRI endpoints are not responding.
- “deactivated” state = the layer 1 interface device on the BRI is off, because the port goes out-of-service.

`TEI Value`

Layer 2 addressing parameter used by the switch to exchange information over point-to-point signaling links between BRI endpoints. Each point-to-point signaling link has an associated TEI. This field displays the addressing parameter value. (0–127)

`Layer2 State`

Point-to-point signaling link layer 2 state. Valid states are “un-assigned,” “assigned,” “established,” “l3-established” or “hyperactive.”

- “un-assigned” = the link is in TEI-UNASSIGN state at Layer 2.
- “assigned” state = the link is in the AWAIT_EST (Await Establish) state at layer 2. (If BRI endpoints support TEI allocation procedures, they successfully execute and a TEI is assigned to the endpoint by the switch.
- “established” = the link is in the MF_EST_NORM (Multi-Frame Established Normal) state at layer 2. The switch successfully initiates the link can now exchange layer 3 frames with the endpoint. If the endpoint does not support SPID initialization procedures, the endpoint extension associated with the link also displays. This is the normal state for the link in the point-to-point wiring configuration.
- “l3-established” = link is in the MF_EST_NORM state at layer 2 and SPID initialization procedures successfully complete. The endpoint extension associated with the link also displays. This is the normal state for the link in the multi-point wiring configuration.
- “hyperactive” = traffic on this link goes over threshold. The link suspends and is deemed hyperactive.

`Endpt Extension`

Voice/data endpoint extension associated with the link if the link is in the “established” (point-to-point configuration) or “l3-established” (multipoint configuration) layer 2 state. Otherwise, this field is blank.

`Endpt SPID`

This field displays the SPID administered on the voice/data endpoint associated with the link. Note that this information is displayed only if the link is in either the “established” (point-to-point configuration) or the “13-established” (multipoint configuration) layer 2 state. Otherwise this field is blank.

`Service SPID`

Indicates if the link is associated with the Service SPID. If the link is associated with Service SPIDs, the field contains a “yes” and the endpoint extension field is blank; otherwise, this field is blank. Service SPID checks building wiring between the switch and the BRI endpoint.

Status Interpretation

The following table provides information on the status bri-port form.

Table 8-10. Status BRI-Port Command Interpretation

Endpoint Types	TEI Range	Layer 2 State	Voice Extension	Service SPID	Description /Recommendation
ASAI, BRI	0-126	Assigned	blank	blank	Transitory state for BRI endpoints and ASAI adjuncts. The switch attempts link establishment. 1. Check endpoints and wiring by following SPID Facility Test Procedures described in the BRI-SET (ISDN-BRI Set/ASAI Adjunct) Maintenance documentation. 2. Verify repairs by executing the **status bri-port PCSSpp** command. Determine that L2 state of the signaling link is “L3-Established” for ASAI adjuncts and BRI endpoints supporting MIM (management information messages) initialization, and “Established” for fixed TEIBRI endpoints and automatic TEIBRI endpoints not supporting MIM initialization. **NOTE:** A MIM is a level-3 message that conveys management and maintenance information between communications systems and BRI terminals.

Continued on next page

Table 8-10. Status BRI-Port Command Interpretation — *Continued*

Endpoint Types	TEI Range	Layer 2 State	Voice Extension	Service SPID	Description /Recommendation
ASAI	0-63	Established	blank	blank	Transitory state for ASAI adjuncts. ASAI signaling is connects at Layer 2. Layer 3 Restart procedure does not complete between switch and adjunct. 1. Check the adjunct by following the manufacturer's recommended repair procedures. 2. Verify repairs by executing the **status bri-port PCSSpp** command. Determine that the L2 state of the signaling link is L3-Established.
BRI	0-126	Established	ext	blank	Normal state for non-MIM initializing, fixed and automatic TEIBRI endpoints.
BRI, ASAI	64-126	Established	blank	blank	Transitory state for automatic TEIBRI endpoints which support MIM initialization. 1. Verify that SPID administration on the switch and endpoint are consistent. Verify the repair by executing the **status bri-port PCSSpp** command. Determine that the L2 state of the signaling link is L3-Established. Otherwise, proceed to Step 2. 2. Try to replace the endpoint. Verify the repair by executing the **status bri-port PCSSpp** command. Determine that the L2 state of the signaling link is L3-Established.
BRI	64-126	L3-Established	ext	blank	Normal state for automatic TEIBRI endpoints supporting MIM initialization.

Continued on next page

Table 8-10. Status BRI-Port Command Interpretation — *Continued*

Endpoint Types	TEI Range	Layer 2 State	Voice Extension	Service SPID	Description /Recommendation
BRI, ASAI	64-126	L3-Established	blank	yes	Technicians conduct SPID facilitation tests on the port. Links are not associated with BRI port endpoints. See description of SPID Facility Test Procedures in the "BRI-SET, ASAI-ADJ, BRI-DAT" Maintenance documentation.
BRI	64-126	L3-Established	ext	yes	Technicians conduct SPID facilitation tests on the port. Links are associated with port endpoints. See description of SPID Facility Test Procedures in the "BRI-SET, ASAI-ADJ, BRI-DAT" Maintenance documentation.
BRI	0-126	L3-Established	blank	blank	Invalid SPID assigned to link. 1. Change the SPID value in the BRI endpoint to match the SPID administered to the BRI endpoint on the port. Verify the repair by executing the **status bri-port PCSSpp** command. Determine that the L2 state of the BRI endpoint is L3-Established.

Continued on next page

Table 8-10. Status BRI-Port Command Interpretation — *Continued*

Endpoint Types	TEI Range	Layer 2 State	Voice Extension	Service SPID	Description /Recommendation
BRI *(cont'd)*	0-126	L3-Assigned	ext	blank	Transitory state for BRI endpoints which support MIM initialization. 2. Wait for five seconds and repeat the command. If the state has not changed, continue with Step 2. 3. Make sure SPID administration on the switch and endpoint are consistent. Verify the repair by executing the **status bri-port PCSSpp** command. Determine that the L2 state of the signaling link is L3-Established. Otherwise, go to Step 3. 4. Try to replace the endpoint. Verify the repair by executing the **status bri-port PCSSpp** command. Determine that the L2 state of the signaling link is L3-Established.
BRI *(cont'd)*	0-126	L3-Assigned	ext	yes	Transitory state for BRI endpoints which support MIM initialization when SPID Facility Test initializes the station. 5. Wait for five seconds and repeat the command. If the state has not changed, continue with Step 2. 6. Make sure SPID administration on the switch and endpoints are consistent. Verify the repair by executing the **status bri-port PCSSpp** command. Determine that the L2 state of the signaling link is L3-Established. Otherwise, go to Step 3. 7. Try to replace the endpoint. Verify the repair by executing the **status bri-port PCSSpp** command. Determine that the L2 state of the signaling link is L3-Established.

Continued on next page

Table 8-10. Status BRI-Port Command Interpretation — *Continued*

Endpoint Types	TEI Range	Layer 2 State	Voice Extension	Service SPID	Description /Recommendation
ASAI	0-126	Hyperactive	ignore	ignore	Link has sent too many messages per unit time.
BRI					Signaling suspends. System timeouts in 60 seconds and attempts reactivate the link. If links remain in this state while no activity occurs at BRI endpoints: 1. Ensure that SPID switch administration and endpoints are consistent. Verify repairs by executing the **status bri-port PCSSpp** command. Determine that the L2 state of the signaling link is L3-Established. 2. Replace the endpoint. Verify repairs by executing the **status bri-port PCSSpp** command. Determine that the L2 state of the signaling link is L3-Established.
ASAI	0-126	L3-Restarting	ext		The switch sends a Restart message to the adjunct but has not received a Restart Acknowledgment message from the adjunct.
ASAI	0-126	L3-Restarted	ext		After receiving a Restart Acknowledgment message, the switch sends a Heartbeat message to the adjunct and awaits a response.
ASAI	0-126	L3-Established	ext		Normal state for ASAI adjunct.

status card-mem

Memory cards are portable, compact memory cards that contain banks of flash EPROM chips. Non-volatile memory cards are eraseable and randomly programmed with user data. Main memory stores system software in its “flash” section. Memory cards that save translations do not contain copies of the system software. During system reboot or system power down conditions, in-core system maintenance hardware error logs temporarily save in memory cards before the system goes down. Then, the error logs file reads back when the system restarts. The Hard Patch feature also uses the memory card as temporary storage when LMM applies patched files to the system software.

The **status card-mem** command displays the following memory card information located at active or standby SPEs:

- Is a valid memory card in place?
- Is the memory card write-protected?

  NOTE:
  Beginning with Release 9, the memory card has no write protect switch and no equivalent software mechanism.

- What is the capacity of the inserted memory card?
- What kind of system configuration - small or medium?
- What is the number of pulses counted in the last erase operation?
- What is the percentage of translation storage space used?
- What are the names of files stored in the memory card, and what is date and time (if available) when it was saved?

Action/ Object	Qualifier	Qualifier Description	Logins	Default	Feature Interactions
status card-mem	***location***	Physical carrier position where the memory card resides in a High or Critical Reliability System Simplex switch configurations= not required. Duplex switch configuration= “A” for control carrier A in Processor Port Network (PPN), or “B” for control carrier B in PPN.	init inads craft cust rcust nms bcms browse	none	see below
	print	Report sent to printer.			
		Examples: **status card-mem** **status card-mem A** **status card-mem b print**			

Feature Interactions

If the Announcement feature is unavailable in the system features configuration, the `Data Present` field is always "`n`" for the "announcements" file. The Announcement feature requires a memory card with a minimum capacity of 4 MB. If the memory card is less than 4 MB, Announcements cannot be save in the memory card.

Core Dump features require 10 MB memory cards for saving core dumps. If the memory card has a capacity less than 10 MB, the core dump operation fails.

Output

For following output example is a display of **status card-mem**.

```
status card-mem
                                MEMORY CARD STATUS

     Location: 01A                           Write Protection: NA
       Status: inserted                         Capacity (MB): 8 ATA Card
  System Size: Medium                  Number of Erase Pulses:
  Card Format: post-G3V8    Translation Storage Space Used (%): 3


   File Name    Data Present    Date     Time
   translation       y         1/28/00  15:05
   announcements     y         1/28/00  16:23
```

Field descriptions

`Location`	Physical location (carrier) of the memory card.Simplex system = 01A for carrier A of Processor Port Network. High or Critical Reliability Systems = 01A or 01B.
`System Size`	System configuration (Small or Medium). This information catches errors such as incorrectly-sized memory card inserted into the system.
`Capacity`	Inserted memory card capacity and the series number of the memory card. (a 3-digit format for the memory card size and a 1-digit format for the series number). Three memory card capacities are used in the DEFINITY Server. Memory card file contents are described below.

Table 8-11. Capacity of Memory Card

Card Size	User	Customer File Names
8 Mb	With Announcements	translation/ announcements
16 Mb	DEFINITY Wireless Business Systems	translation/ announcements/firmware
48 Mb	System Upgrade Note: Post-G3V8	translation/ announcements/core_dump
48 Mb	System Upgrade Note: Post-G3V8	system_software

Field descriptions

`Status`

"inserted" = valid memory card is in the memory card slot. The switch can perform I/O operation to the memory card.

"no card" = no memory card is inserted or the inserted memory card has a bad connection.

"unformatted"= the inserted memory card is unformatted or the switch cannot recognized it.

`Write-Protection`

"N/A"= For R9 and later, the memory card has no write protect switch and no equivalent software mechanism.

`Number of Erase Pulses`

Number of pulses counted in the last erase operation on a Series 1 memory card. This field is blank for Series 2 memory cards due to different algorithm of erase operations between the two series.

`Translation Storage Space Used "1"`

Percentage of reserved storage space for storing translation files in the memory card that saves translations to the memory card.

This percentage is valid for the specific memory card used in the *most recent* save translation operation (from **save translation** or with scheduled maintenance and save translation enabled). If the memory card is replaced with another card, or if no save translation is performed on the new memory card, the percentage does **not** indicate the translation storage space used in the new card.

`File Name`

Each formatted memory card has reserved a fixed space in the card for each file. The starting address and size of each reserved slot is pre-determined according to the capacity of the memory card. The file name as defined in Table "Capacity of Memory Card" is shown in this field.

`Data Present`

"y" when the file contains valid data. Otherwise, "n."

`Date Time`

Date and time when the file was saved into the memory card. For the Software Upgrade memory card, this field contains the system software release number instead of the time stamp. The year information is not available.

status cdr-link

status cdr-link [print]

The status cdr-link command displays the status of the call detail recording (CDR) links. If a link is down, the report includes the number of times the switch has tried to re-establish the link.

The CDR link is the physical link that the SPE uses to send call detail records to an output device such as a Call Detail Recording Utility (CDRU). CDR links use System Ports which are described in the PDATA-PT section of Chapter 9. A system may have up to two CDR links, a primary and a secondary. See PRI-CDR in Chapter 9.

Output

The following information is displayed for both the Primary and Secondary CDR links, whether or not both are used.

`Link State` The operational status of the link as follows:

`up` The link is established and is capable of supporting the application. This is the normal operational state.

`down` The link is physically down.

`extension not administered` An extension number for the output device has not been assigned on the CDR system parameters form.

`Number of Retries` The number of times the switch has tried to set up the link.

`Maintenance Busy` Whether the link is busied out for testing.

The following is an example of the fields contained on the output form.

```
status cdr-link                                        SPE A

                          CDR LINK STATUS

                   Primary                  Secondary

      Links state: up                       endpoint not administered

 Maintenance Busy? no
```

status clan-port

The same information that is displayed by the status clan-port command can be invoked with:

- **status link n**
- **status pgate-port** for PGATE links
- **status clan-port** or **netstat link n** for C-LAN links.

See status link n for more information.

status cleared-alarm-notif

Expert Systems use **status cleared-alarm-notif** to detect chronic alarming conditions. If the “Feature is suspended” message appears, Expert Systems can identify open trouble tickets as chronic problems for special consideration.

Action/ Object	Qualifier	Qualifier Description	Logins	Defaults	Feature Interactions
cleared-alarm-notif	*1* *2*	First OSS telephone number status of Cleared Alarm Notification. Second OSS telephone number status of Cleared Alarm Notification. Examples: **status cleared-alarm-notif** **status cleared-alarm-notif 1** **status cleared alarm-notif 2**	init inads craft cust rcust	first OSS telephone number for the Cleared Alarm Notification status.	none

status conference

Use **status conference** to solve the following multimedia problems:

1. A user cannot join or remain connected to a conference.
2. Automatic algorithms — audio AUTO mode and the Px64 video picture specifications downgrade the conference, causing poor video quality.
3. A user does not receive full service.
4. An audio add-on user cannot join or remain connected to a conference.
5. A conferee is not seen by other users due to interworking problems.
6. Users cannot participate in Multipoint Communications Service conferences.
7. Continuous conferences do not move endpoints in or out of quadrants.

Action/ Object	Qualifier	Qualifier Description	Logins	Defaults	Feature Interactions
status conference	*status conference* *status conference 2 print*	Stored conference data. Conference 2 data (current or last completed). Sends report to SAT-linked printer. Examples: **status conference** **status conference 2 print** **status conference [all \ conference-ID] [print \ schedule]** **status conference [all \ conference-ID] [endpoint \ endpoint id]**	init inads craft	conference-ID = **all** (all stored data).	none

Output

```
status 50                                                    Page  1 of   2
                       STATUS OF CONFERENCE: 50  Status: in-use
Conference Name: MMCH DYNAMIC          Conference Mode: voice-activated
 Password Scope:
       Password:                          Cascade Mode:
          Class: dedicated                  Audio Mode: G.728
Start Time/Date: 09:08 OCT 28         Data Mode: none      MLP Rate:
 Stop Time/Date: 00:00 000 00   Admin Bandwidth: 64k       No of Channels: 2
          Chair:                 Conf Bandwidth: 64k      Rate Adaptation? y
Format (in/out): CIF             FPS: 7.5  QFPS: 7.5   Lo/Hi Interworking? n

                            Dial In  ----Capability---- Rate Bond
   Type Ext Meet-Me Number   Type Use Chl Aud Vid Mlp Gx Adpt Mode Ts Vs
1: P64                       in   c   y   y   c      e               b
2: AUD                       out  y       y
3:
4:
5:
6:
```

sddfsoc KLC 010397

Screen 8-27. status conference: page 1 of 2

It is possible for several records to display. Active conferences display first (in order of conference-ID), followed by completed conferences (most recently completed first). Conferences that have not begun have no data or information.

Conference data displays in 2 parts: the first screen describes the status of the conference and indicates the modes and levels of the conference. It also identifies in-use endpoints that cause conference operating modes to change. This screen is similar to the administration screens. The remainder of the screens display endpoint level data (up to 8 endpoints per screen), revealing ports and drop reasons.

Screen 8-27 on page 8-324 shows page 1 of a typical administration screen. The first screen appears when **status conference** is entered and at least 1 valid conference is found.

Field descriptions (status conference, page 1)

status	Current status of the conference (active, in-use, complete)
conference name	(MMCH DYNAMIC)
conference mode	(Voice-activated)
password	Not Applicable
password scope	Not Applicable
cascade mode	Conference cascade mode (blank)
audio mode	Current operating audio mode (G.711-A, G.711-mu, G.728. G.722)
class	Conference type (dedicated)
data mode	Conference data mode capability (none, any-mlp, ww-pcs)
MLP rate	Conference MLP Data Rate (blank).
start time/date	Conference start time in 24-hour notation with month and day.
stop time/date	End of conference in 24-hour notation with month and day. It is the actual end time if Status is complete; otherwise, it is blank.
admin bandwidth	Channel bandwidth administered on the Conference Record form. (64k)
no of channels	Number of channels required for each Px64 endpoint (2)
Chair	Current chair token holder. ()
conf bandwidth	Current operating channel conference bandwidth. Different from the administered bandwidth because of Rate Adaptation.
Rate adaptation	Does this conference support Rate Adaptation? (n, y)

Format (in/out)	The video format for single-screen conferences: CIF, QCIF, QCIF/CIF, H.CTS, H.CTX+, and SG4. non-H.261 conferences = input and output formats are always symmetric and the mode is the same for input and output. (H.CTX, H.CTX+, and SG4). H.261 mode non-continuous presence conferences = symmetric format (CIF and QCIF). Non-presentation, continuous presence conference in single-screen = symmetric format (CIF and QCIF). Presentation mode H.261 single screen continuous presence capable conferences = symmetric input and output formats QCIF/CIF (displayed as CIF) or asymmetric QCIF/CIF, if the administered format is upgradeable. For quad-screen conferences = the format is QCIF/CIF to reflect the QCIF input from all participants and output of CIF to all participants. For presentation mode quad-screen conference = the format is QCIF/CIF to reflect the input/output of all participants except the presenter. In quad-screen mode, presenter input is always CIF.
FPS	The CIF frame rate (frames per second) - '-', 30, 15, 10, 7.5. FPS indicates the rate that endpoints can receive frames. The MCU cannot detect maximum transmit frame rates or current frame rates. Frame rates change due to the amount of motion in the input image.
QFPS	The ACIF frame rate (frames per second) ('- ', 30, 15, 10, 7.5). The rate that an endpoint can generate/receive frames. Quad-screen VAS conferences = QFPS reflects the highest common QCIF frame rate of all endpoints and the video mixer board rate, that is lower than the rest of the participants. QCIF calculation accounts for the highest common CIF frame rate declared by all conference participants, since the QCIF rate cannot be greater than that of the highest common CIF rate. Quad-screen presentation conferences = QFPS reflects the highest common QCIF frame rate of all participants and the video mixer board rate. QFPS cannot be greater than the CIF frame rate that is announced by the presenter. QFPS field is blank for proprietary modes.
lo/hi interworking	Does this conference support Low Speed/High Speed Interworking? This field defaults to n.
Type	The type of conferee — Audio/Video (P64), Audio Add-on (AUD), Cascade Link (CAS), BONDing Call (BOND), BONDing Cascade Link (BCAS), UCC Controller (UCC), or Dedicated Access (DA). BONDing calls use up to 12 channels to form a single multimedia pipe.
Ext	Administered endpoint extension. ().

`Meet-me number`	The Meet-Me Number administered for the Meet-Me Extension. ()
`Dial Type`	“in” = dial-in to join endpoint to conference. “out” = dial-out to join endpoint to conference.
`In Use`	“y” = the endpoint is in use and is fully-connected on all media in an active conference. “c” = the endpoint is in use and is fully-connected; however, the endpoint has changed conference audio or video capability or conference rate due to rate adaptation. This condition requires analysis of this endpoint’s capabilities and mode fields to identify reduced capability. “e” = the endpoint is in use but has capability problems. The endpoint lacks one of the required capabilities (Vid, Bhl, MLP) to fully participate. For MLP capabilities, see the “T120” field. This condition requires analysis of this endpoint’s capabilities and mode field to identify the missing capability. “f” = the endpoint is in use but not connected to all media. The endpoint declared all required capabilities (channel/video/ audio/data) but is not fully connected to all conference media. This endpoint may be connecting, failed to connect, or is not a valid video source. This condition requires analysis of this endpoint’s capabilities and mode fields to identify the problem. “n” = the endpoint disconnected during a conference or unsuccessfully attempted to connect to a conference. “blank” = the field is blank until the first call from or to the endpoint.
`Chl`	“y” = the endpoint has the required number of channels. “e” = the endpoint does not declare support for the correct number of channels and cannot participate fully in the conference. “n” = the endpoint declares the correct number of channels, but not all join the conference, due to a network or endpoint problem. “blank” = Audio add-on endpoints set the `Chl` field to blank.

`Aud`	“y” = the endpoint has the required audio capability. Audio add-on endpoints always set the Aud field to y when the endpoint joins the conference. “c” = the endpoint is PCM only and it changes the conference video quality by changing the operating audio from G.728 to G.711. If administered audio modes are auto and the administered bandwidth is 112 kbps (56 k/channel) or 128 kbps (64 k/channel), the system initiates with the highest common audio, G.728. When the administered bandwidth is greater than 128 kbps, the system initiates with the highest common bandwidth, 7 kHz. “e”= A PCM-only endpoint that could not support the administered audio mode, G.728 (such as a data conference), or G. 278/G.711 endpoint that could not support the administered audio mode, 7 kHz. Such endpoints operate with PCM audio and interwork with current operating audio modes. blank = blank until the first call from or to the endpoint.
`Vid`	“y” = the endpoint has the required video capability and should be receiving video if the Chl, Aud, and Dat fields are `y`. “c” = downgraded conference video quality from changing CIF to ACIF or by decreasing the frame rate. The conference video mode defaults to CIF If QCIF-only endpoints join the conference, the entire conference operates in QCIF, with downgraded video clarity. The conference frame rate is initially set to the highest frame rate that can be reduced by any endpoint. If the conference video mode is not administered with upgrade capability, the video parameters for a conference are “downgraded.” They are not “upgraded” until all endpoints disconnect from the conference. “e” = the endpoint doe not declare video capability in its cap-set. “n” = audio only, not receiving video, due to audio or data problems. “blank” = Audio add-on endpoint defaults the Vid field to `blank`.
`Mlp`	Control Link to the ESM (T.120 stack terminator) status, the endpoint MLP data capability, and the state of the data connection in the T.120 stack. This field defaults to `blank`, indicating that the Data Mode for the conference is `none`.
`Gx`	“y” = This endpoint has Still Frame Graphics capability. e = This endpoint does not have Still Frame Graphics capability. The conference retains still frame graphics capability when non-compliant endpoints join the conference. blank = This endpoint never joined the conference.

`Rate Adpt`	Rate adaptation/Interworking indicator (`5`, `6`, `y`, `c`, `e`, `n`, `blank`). 5 and “6” apply to Low Speed/High Speed Interworking. All other values apply to Rate Adaptation. “5” = 56-kbps (Low Speed) endpoint joins a High Speed (128 kbps or above) conference. This endpoint connects with audio only capability but is not a valid video source and destination. “6” = 64-kbps (Low Speed) endpoint joins a High Speed (128 kbps or above) conference. This endpoint connects with audio only capability but is not a valid video source and destination. “y” = Endpoint joins the conference at 64 kbps, but because rate adaptation to 56 kbps is triggered by another endpoint, this endpoint rate adapts to 56 kbps. “c “= The administered conference bandwidth is 64 kbps. This endpoint joins the conference at 56 kbps. The first 56 kbps endpoint that joins 64 kbps rate adaptable conferences triggers rate adaptation (see `Join Time` below). “n” = Another endpoint triggers a 64-kbps conference to rate adapt to 56 kbps. This endpoint joins the conference at 64 kbps, but encounters problems in rate adapting to 56 kbps. This endpoint may have audio and may be receiving video, but is not a valid video source. “blank” Rate adaptation was not triggered by any endpoint. If this endpoint is in use and connected, it joins the conference at the administered bandwidth.
`Bond Mode`	BONDing Mode = blank for calls that are unrelated to bonding.
`Ts`	“t” = The endpoint detects voice energy (talking). “m” = The endpoint indicates to the MCU that it is muted. It is possible for an endpoint to mute, but not send any indication to the MCU. In this situation the MCU does not display a mute indication. “M” = UDD/CRCS Agent interface mutes the endpoint’s audio. Both the endpoint and the UCC/CRCS Agent must mute the endpoint audio. “S” = The solo-audio state set by UCC/CRCS Agents mutes the endpoint’s audio. While in solo-audio state, new endpoints that join the conference automatically mute. “blank” = Voice energy (talking) is not detected from the endpoint.

`Vs`	MCU endpoint video state (a, b, B, c, i, r, R, s, S, u, U, v, blank). Quad-screen conferences = an `*` appears before the Vs value indicating that an endpoint belongs to the mixed image. `#` appears before Vs values indicating that an endpoint is set to be in the mixed image (via administration or UCC/CRCS Agent), but instead, `Fill` video displays in its place. This occurs when videos of an endpoint that are set in a quadrant cannot be used as a video sources, because the endpoint is not joined to the conference, suppresses its video, or has invalid video for its video source. Up to four endpoints may have an `*` or `#` before the Vs field value. Quad-screen conferences in VAS mode = Mixed images broadcast to all endpoints. Quad-screen conferences in presentation mode = Mixed images are return videos to the presenter.
`Vs (cont'd.)`	a = Applies to quad-screen conferences. *a indicates that an endpoint belongs to the mixed image and is administered to one of the quadrants, but is not currently connected (Fill image displays). b = Applies to full-screen conferences. This endpoint's video broadcasts to other sites. This conference is in VAS, broadcast, or presentation mode. Quad-screen VAS conferences are prefix with an * indicating that this endpoint's video belongs to the mixed image. Quad-screen presentation conferences, (b without an asterisk) identify the presenter as the broadcaster. B = The UCC roll call feature causes the endpoint's video to broadcast to other sites. The UCC roll call feature performs in full-screen mode. "c" = This endpoint's video broadcasts to other sites. The conference is in chair mode and the chair designates the broadcaster. Chair features perform in full-screen mode. "i" = The endpoint is not a valid video source. #i represents continuous presence conferences with endpoints that are set in particular quadrants. "r" = For full-screen conferences, the endpoint's video is the return video to the broadcaster. For continuous presence conference in presentation mode, *r represents a VAS quadrant that belongs to the mixed image. "R" = The UCC browse feature causes the endpoint's video to return video to the broadcaster. UCC Browse feature perform in full-screen mode. "s" = The endpoint suppresses this endpoint's video. For continuous presence conference with fixed quadrant participants, #s represents endpoints that are fixed in a particular quadrant.

Vs (cont'd)	"S" = UCC/CRCS Agent interface suppresses this endpoint's video. For continuous presence conference with fixed quadrant participants, #S represents endpoints that are fixed in a particular quadrant S displays when both the endpoint and the UCC/CRCS Agent suppress the endpoint video. "u" = For full-screen conferences, this endpoint's video broadcasts to other sites. The conference is in VAS mode and the UCC/CRSCS Agent interface designates the broadcaster. For quad-screen conferences, UCC/CRCS Agents designate this endpoint as set in a quadrant. An *u represents endpoints that belong to the quad image, and #U represents disconnected endpoints. "U" = For quad-screen conferences UCC/CRCS Agents designate quadrants as VAS. *U indicates that this endpoint belongs to the quad image. "v" This endpoint's video broadcasts to other sites. The conference is in VAS mode but the endpoint asks to be a broadcaster with the "See-Me" request and is granted a MCV (Multipoint Command Visualize) token. The See-Me feature performs in full-screen mode. "blank" = The endpoint's video is not broadcast, return, video, or part of the mixed-image, but it is a valid video source.

```
status conference                                                    page 2 of 2

                              STATUS OF CONFERENCE:

                     Sum Grp: Group1  Group2  Group3  Group 4
                          L1:
                          L2:

            Join    Drop    Drop    AC  --------Ports--------- Sum
      Ext   Time    Time   Reason   Num Trunk   Video  Aud/Esm Grp  Software
1:

2:

3:

4:

5:

6:
```

Screen 8-28. status conference: page 2 of 2

Field descriptions (status conference, page 2)

`Sum Grp`	The VD audio Level 1 (L1) and Level 2 (L2) summer group parts for each assigned group (1-4). Summer parts are assigned only for conferences with over 6 participants. When a conference operates at an audio mode of 7 kHz (administered audio mode is 7 kHz, or auto with the bandwidth greater than 128 kbps), the system allocates “primary” and “secondary” L1 and L2 summer parts. Primary and secondary parts are allocated as adjacent port slots on the same board. Status conferences display primary summer ports. Secondary summer ports are one slot higher than displayed primary summer ports.
`Join Time`	Time (in 24-hour notation) when the channel joins the conference.
`Drop Time`	Time (in 24-hour notation) when the channel disconnects. If the first channel has a drop time, the endpoint is inactive. If a drop time exists without a join time, the call disconnects without joining the conference.
`Drop Reason`	Channel’s disconnect because: “2-pri” = Administration errors cause mismatches in primary-secondary designation for cascade linking. This mismatch indicates that both MCUs are administered as primaries (see “Cascading” for a description of primary-secondary compatibility). “2-sec” = Administration errors cause mismatches in primary-secondary designation for a cascade link. This mismatch indicates that both MCUs are administered as secondaries (see “Cascading” for a description of primary-secondary compatibility). “Agent” = The reservation agent causes the call to disconnect. “Bandwidth” = A mismatch occurs between a call and the conference it attempts to join. “BondHshake” = Information channel parameters are unsupported or invalid, parameter negotiations terminate out of sequence, timers expire because secondary channels do not establish, or BONDing framing is undetected for one of the other channels. “Busy” = MCU detects that the conferee’s terminal equipment is busy. This drop reason is detected by ISDN cause values (for example h0). See “Dial-out” for a description of CPTR usage. “Chair” = Chair Command Disconnect (CCD) or Chair Command Kill (CCK) signals disconnects the endpoint. “Conf End” = The conference ends when it reaches the stop time for a reserved conference or an active conference converts to file.

`Drop Reason (cont'd)`	Endpoint Clearing received from DS1. The endpoint causes the disconnect. The endpoint notifies the MCU that it intends to disconnect. Far-end Clearing received from DS1. The network or endpoint cause the disconnect. “Handshake” = Framing is not located or is lost for over 40 seconds and the endpoint disconnects. (The endpoint cannot complete initialization due to problems with finding Frame Alignment Signal (FAS), Multi Frame Alignment (MFA) and getting a corrected coded cap-set.) “IDtimeout” = The H.320 sends three unsuccessful responses to the MCU regarding the UIN/password Query. Timeout periods exist for each period. “Internal” = MCU cannot allocate the necessary trunk resources to route the dial-out call for the specified dial-numbers. This problem can be associated with routing patterns or trunk associated translations, or it can indicate insufficient trunk resources. “Network” = Clearing received from DS1. The network causes the disconnect. The endpoint with disconnect notification capability disconnects without notifying the MCU. “Not-MCU” = The dial-out destination number(s) of the “CAS” extension terminates to a number that is not a dial-in cascade MCU extension. “No-ring” = Calls are up for 30 seconds without ringing. “Reorder” = The MCU CPTR resources detects that no network trunks are available to place the call. See “Dial-out” for a description of CPTR usage.

`Drop Reason (cont'd)`	"Pre-AnsDrop" = The call disconnects before an endpoint answers. The network, an endpoint, or a terminal adapter may cause the disconnect. This drop reason differs from 'No-answer,' which indicates that a 60-second timeout occurs during alerting. In this case, the call drops before the 60-second timer expires. Some busy endpoints connected through terminal adapters display this behavior. "Resource" = MCU cannot provide resources (VC or MMI) when the call arrives or loses the resources during the call. This can occur when they are Out of Service, busied out by craft, or in use by system maintenance. This drop reason can also occur if the DS1/MMI cable disconnects. If a resource problem exists when the call arrives, it gets a reorder (fast busy) and the MCU does not disconnected it. "Password" =The user entered a wrong password or the audio add-on user did not enter it within the specified time period. The audio add-on user has one attempt to enter a correct password and has about 10 seconds between digits (inter-digit timing). "System" = MCU restarts (level 2) disconnect all calls. "UIN-Inv" The user enters an invalid User Identification Number. "Unknown" = The system cannot determine the disconnect cause. "Wrong Num" The MCPTR resources SDN cause value detects an incorrectly-dialed destination number. See "Dial-out" for details. "UCC" = The controller intentionally disconnects the endpoint.
`AC Num`	Administered Connection Number. (1–128) AC numbers further diagnose problems by combining status conference information with the **status administered connection** command, and data stored in error and alarm logs.
`Ports Trunk`	The data endpoint used by the channel.
`Ports Video`	The MMI port for the channel.
`Ports Aud`	If the endpoint type is not "UCC," the VC audio encoder port (which is always paired to a decoder port) for the channel (only the first channel). appears together with the ESM data port in the endpoint's channel 1 port slot position of the `Port Aud/ESM` column. For "UCC" endpoints, channel 1 port slot positions display allocated Call Classifier resources.
`Ports ESM`	Expansion Service Module MMI data port. This field defaults to blank.
`Sum Grp`	Endpoint's assigned summer group number. The summer group port assignments are on screen 1.
`software`	For Avaya use only.

Field descriptions (status conference endpoint)

The **status conference *x* endpoint *y*** command specifies that the conference is found. Data relevant for each endpoint displays in 6 pages. If technicians use the endpoint-ID **all**, every specified endpoint displays.

Page 1 - Status Conference Endpoint

```
status conference endpoint                                          page 1 of 6
              STATUS OF CONFERENCE ___   ENDPOINT: __            Status: ________
Ext: _____  Type: ____       Manufacturer/Country: ____/____    Product: _____
   Terminal Name: _______________       Data Mode: _________  MLP Rate: ____
 Admin Bandwidth: ____                                   Rate Adaptation: _
  Conf Bandwidth: ____                                Lo/Hi Interworking: _
  Meet-Me Number: ____________________        Dial Out #1: ______________________
  Sum Grp: _  L1: ______  L2: ______                   #2: ______________________
      Quadrature: ______ ________


                     ENDPOINT STATES/CAPABILITIES/MODES
                In  Enh  ----Capability---- Rate Bond
                Use BAS  Chl Aud Vid Mlp Gx Adpt Mode  Ts Vs
                 -   -    -   -   -   -  -    -   -    -   -


Help line
enter command:
```

Screen 8-29. Page 1 of 6: status conference x endpoint y

Field descriptions

Endpoint	Slot number associated with the endpoint on the conference forms.
Product	Product identification number obtained from the endpoint.
Manufacturer/ Country	Manufacturer identification number and manufacturer's country code obtained from the endpoint.
Terminal Name	Blank.
Sum Grp	Endpoints belong to this Summer group number and the VC Audio Level (L1) and Level 2 (L2) summer ports for this group. These fields supply entries for conferences with over 6 participants.
Dial Out #1	Blank
Dial Out #2	Blank

`In Use`

Is the endpoint participating in the conference or connecting to the conference? - `y`, `c`, `e`, `f`, `n`, `blank`.

“y” = The endpoint is in use and fully-connected on all media in an active conference.

“c” = The endpoint is in use and fully-connected; however, the endpoint changes the conference audio or video capability, or the rate of the conference due to rate adaptation. This condition requires analysis of this endpoint’s capabilities and mode fields to identify the reduced capability.

“e” = The endpoint active, but has capability problems. The endpoint lacks one of the required capabilities (Vid, Bhl, MLP) to be a full participant. For MLP capabilities, see the “T120” field. This condition requires analysis of this endpoint’s capabilities and mode field to identify the missing capability.

“f” = The endpoint is active, but is not connected to all media. The endpoint declared all required capabilities (channel/video/ audio/data) but is not fully-connected to all conference media. This endpoint may be connecting, failed to connect, or is not a valid video source. This condition requires analysis of this endpoint’s capabilities and mode fields to identify the problem.

“n” = The endpoint connects then disconnects in a conference, or unsuccessfully attempts to connect to a conference.

“blank” = Blank until the first call is made from or to the endpoint.

`Enh BAS`

Enhanced Basic Service Flag - `n`, `y`

“y” = The endpoint supports the enhanced BAS commands/caps;
“n” = The endpoint supports the basic BAS commands/caps.

`Chl`

Data on the quantify and quality of channels (transfer rate)? - `y`, `e`, `n`, `blank`

“y” = The endpoint has the required number of channels.

“e” = The endpoint does not declare support for the correct number of channels and cannot participate fully in the conference.

“n” = The endpoint declares the correct number of channels, but not all channels join the conference, due to network or endpoint problems.

“blank” = Audio add-on endpoints set the `Chl` field to `blank`.

`Aud`

Does it have the required audio capability? - `y`, `c`, `e`, `blank`

“y” = The endpoint has the required audio capability. Audio add-on endpoints set the Aud field y when the endpoint joins the conference.

“c” = This PCM-only endpoint changes conference video quality by changing the operating audio from G.728 to G.711. If the administered audio mode is auto and the administered bandwidth is 112 kbps (56 k/channel) or 128 kbps (64 k/channel), the system begins with the highest common audio, G.728. When the administered bandwidth is greater than 128 kbps, the system begins with the highest common bandwidth, 7 kHz.

“e” = A PCM-only endpoint that could not support the administered audio mode, G.728 (such as a data conference), or G. 278/G.711 endpoint that could not support the administered audio mode, 7 kHz. Such endpoints operate with PCM audio and interwork with operating audio modes.

“blank” = Blank until the first call is made from or to the endpoint.

`Vid`

Does it have required video capability and is it receiving video? - `y`, `c`, `e`, `n`, `blank`

“y” = The endpoint has the required video capability and receives video if the Chl, Aud, and Dat fields are `y`.

“c” = The endpoint downgrades the conference’s video quality from CIF to ACIF, or by decreasing the frame rate. The conference video mode defaults to CIF, and if a QCIF-only endpoint joins the conference, the entire conference operates in QCIF, with downgraded video clarity. The conference frame rate is initially set to the highest frame rate that can be reduced by any endpoint. If the conference video mode is not administered with upgrade capability, the video parameters for a conference downgrade. They do not upgraded until all endpoints disconnect from the conference.

“e” = The endpoint does not declare video capability in its cap-set.

“n” = Audio only, not receiving video, due to an audio or data problem.

“blank” = Audio add-on endpoints set the Vid field to `blank`.

`Mlp`

The relationship between the Control Link and the ESM (T.120 stack terminator), the endpoint MLP data capability, and the state of the data connection in the T.120 stack. This field defaults to `blank`, indicating that the Data Mode for the conference is `none`.

`Gx`

“y” This endpoint has Still Frame Graphics capability.

“e” = This endpoint did not have Still Frame Graphics capability. The conference retains still frame graphics capability when a non-compliant endpoint joins the conference.

“blank” = This endpoint never joins the conference.

`Rate Adpt`

Rate adaptation/Interworking indicator = `5`, `6`, `y`, `c`, `e`, `n`, `blank`. 5 and 6 apply to Low Speed/High Speed Interworking. All other values apply to Rate Adaptation.

“5”= 56-kbps (Low Speed) endpoints join High Speed (128 kbps or above) conferences. This endpoint connects with audio only capability, but is not a valid video source and destination.

“6” = 64-kbps (Low Speed) endpoints join High Speed (128 kbps or above) conferences. This endpoint connects with audio only capability, but is not a valid video source and destination.

“y” = This endpoint joins the conference at 64 kbps, but because another endpoint triggers rate adaptation to 56 kbps, this endpoint rate adapts to 56 kbps.

“c” = 64 kbps endpoints join the conference at 56 kbps. The first 56 kbps endpoint that joins 64 kbps rate adaptable conferences triggers rate adaptation (see `Join Time` below).

“n” = Another endpoint triggers a 64-kbps conferences to rate adapt to 56 kbps. This endpoint joins the conference at 64 kbps, but encounters problems with rate adapting to 56 kbps. This endpoint may have audio and may be receiving video, but is not a valid video source.

“blank” = No endpoint triggers rate adaptation. If this endpoint is active, it joins the conference at the administered bandwidth.

`Bond Mode`

BONDing Mode - blank. This field is blank for calls that are not related to bonding.

`Ts` The talking state of the endpoint - `t`, `m`, `M`, `S`, `blank`.

“t” = The endpoint detects voice energy (talking).

“m” = The endpoint indicates that it is muted to the MCU. Endpoints may mute, but not send an indication to the MCU.

“M” = UDD/CRCS Agent interface mutes the endpoint’s audio. M displays when both the endpoint and the UCC/CRCS Agent mute the endpoint audio.

“S” = the solo-audio state set by UCC/CRCS Agent mutes the endpoint’s audio. While in solo-audio state, new endpoints joining the conference automatically mute.

“blank” = The endpoint does not detect voice energy (talking).

`Vs` The MCU video state for this endpoint. a, b, B, c, i, r, R, s, S, u, U, v, blank.

Quad-screen conferences = `*` appears before V values indicating that an endpoint belongs to the mixed image. A # appears before the V values indicating that an endpoint belongs to the mixed image (by administration or UCC/CRCS Agent). Instead, a `Fill` video displays in its place. This occurs when an endpoint’s video that is set in a quadrant cannot be used as a video source because the endpoint is not connected to the conference, suppresses its video, or has invalid video for its video source. Up to four endpoints have an `*` or # before the Vs field value.

Quad-screen conference in VAS mode = The mixed image broadcasts to all endpoints. For quad-screen conference in presentation mode, the mixed image is return video to the presenter.

“a” = This value applies to quad-screen conferences. *a indicates that an endpoint belongs to the current mixed image and is administered to one of the quadrants. `*a` indicates that the endpoint is fixed in a quadrant, but is not currently connected (Fill image displays).

“b” = For full-screen conferences, this endpoint’s video broadcasts to other sites. This conference is in VAS, broadcast, or presentation mode. For quad-screen VAS conference are prefixed an asterisk indicating that this endpoint’s video is part of the mixed image because of VAS. For quad-screen presentation conferences, `b` identifies the presenter as the broadcaster.

“B” = The UCC roll call feature causes the endpoint’s video to broadcast to other sites. The UCC roll call feature performs in full-screen mode.

“c” = This endpoint’s video broadcasts to other sites. The conference was in chair mode and the chair designates the broadcaster. Chair features perform in full-screen mode.

`Vs (cont'd.)`

"i" = The endpoint is not a valid video source. For continuous presence conference, #i represents endpoints that are is fixed in a particular quadrant.

"r" For full-screen conferences, t he endpoint's video is the return video to the broadcaster. For continuous presence conferences in presentation mode, *r represents a VAS quadrant that is part of the mixed image.

"R" = The UCC browse feature causes the endpoint's video to be the return video to the broadcaster. UCC Browse feature performs in full-screen mode.

"s" = The endpoint suppresses its video. For continuous presence conferences with fixed quadrant participants, #s represents an endpoint that is fixed in a particular quadrant.

"S" = UCC/CRCS Agent interface suppresses the endpoint's video. For continuous presence conference with fixed quadrant participants, #s represents an endpoint that is fixed in a particular quadrant. `S` displays when both the endpoint and the UCC/CRCS Agent suppress the endpoint video.

"u" = For full-screen conferences, this endpoint's video broadcasts to other sites. The conference is in VAS mode and the UCC/CRSCS Agent interface designates the broadcaster. For quad-screen conferences, the UCC/CRCS Agent designates this endpoint as fixed in a quadrant. `*u` represents an endpoint that is part of the quad image, and `#u` represents a disconnected endpoint.

"U" = For quad-screen conferences, UCC/CRCS Agents designate a quadrant as VAS. `*U` indicates that this endpoint is part of the current quad image.

"v" = This endpoint's video broadcasts to other sites. The conference was in VAS mode, but the endpoint asks to be a broadcaster with the "See-Me" request and is granted a MCV (Multipoint Command Visualize) token. The See-Me feature performs in full-screen mode.

"blank" = The endpoint's video is not broadcast, return, video, or part of the mixed-image, but it is a valid video source.

Page 2 - Endpoint Channel Information

This section describes fields specific to endpoint-level command output.

```
status conference endpoint                                          page 2 of 6

                          ENDPOINT CHANNEL INFORMATION

Chan. Join  Drop  ----Drop----  AC  ------------Ports----------  Fr
 No.  Time  Time  Reason  Code  Num Trunk  Video Aud/ESM BONDng  Err Software
  1:  _____ _____ _________ __  ___ ______ ______ ______ ______  ___ ________
  2:  _____ _____ _________ __  ___ ______ ______ ______ ______  ___ ________
  3:  _____ _____ _________ __  ___ ______ ______        ______  ___ ________
  4:  _____ _____ _________ __  ___ ______ ______        ______  ___ ________
  5:  _____ _____ _________ __  ___ ______ ______        ______  ___ ________
  6:  _____ _____ _________ __  ___ ______ ______        ______  ___ ________
  7:  _____ _____ _________ __  ___ ______ ______        ______  ___ ________
  8:  _____ _____ _________ __  ___ ______ ______        ______  ___ ________
  9:  _____ _____ _________ __  ___ ______ ______        ______  ___ ________
 10:  _____ _____ _________ __  ___ ______ ______        ______  ___ ________
 11:  _____ _____ _________ __  ___ ______ ______        ______  ___ ________
 12:  _____ _____ _________ __  ___ ______ ______        ______  ___ ________

Help line
enter command:
```

Screen 8-30. Page 2 of 6: status conference *x* endpoint *y*

Field descriptions

`Join Time`	Time (in 24-hour notation) when the channel joins the conference.
`Drop Time`	Time (in 24-hour notation) when the channel disconnects. If the first channel has a drop time, the endpoint is inactive. If a drop time occurs without a join time, the call disconnects without joining the conference.

`Drop Reason`

Channels disconnect because:

“2-pri” = Administration errors cause mismatches in primary-secondary designations for cascade links. This mismatch indicates that both MCUs are administered as primaries (see “Cascading” for a description of primary-secondary compatibility).

“2-sec” = Administration errors cause mismatches in primary-secondary designations for cascade links. This mismatch shows that both MCUs are administered as secondaries (see “Cascading” for a description of primary-secondary compatibility).

“Agent” = Reservation agents cause calls to disconnect (for example, agents change connected dial-out destination numbers).

“Bandwidth” = Mismatches occur when bandwidths of calls and the conferences they attempt to join are inconsistent.

“BondHshake” = Unsupported Information channel parameters or invalid, parameter negotiations that terminate out of sequence, timers that expire because secondary channels do not establish, or BONDing framing that goes undetected for another channels.

“Busy” = The MCU detects that the conferee’s terminal equipment is busy. An ISDN cause value detects this drop reason (for example h0). See “Dial-out” for a description of CPTR usage.

“Chair” = Chair Command Disconnect (CCD) or Chair Command Kill (CCK) signals disconnect the endpoint.

“Conf End” = The conference ends when the stop time is reached for a reserved conference or an active conference converts to file.

`Drop Reason (cont'd)`	"Endpoint" = Clearing received from DS1. The endpoint initiates the disconnect. The endpoint notifies the MCU that it intends to disconnect. "Far-end" = Clearing received from DS1. The network or endpoint initiate the disconnect. "Handshake" = Framing is never found or is lost for over 40 seconds and the endpoint is disconnected. (the endpoint could not complete initialization due to problems with finding Frame Alignment Signal (FAS), Multi Frame Alignment (MFA) and corrected coded cap-sets) "IDtimeout" = The H3.20 user unsuccessfully (three times) sends MCU responses regarding the UIN/password Query. Each timeout period is administered. "Internal" = MCU has a problem allocating the necessary trunk resources to route dial-out calls for specified dial-numbers. This problem is associated with routing patterns or trunk-associated translation (for example, TAC specified in the dial-out number or routing pattern points to a trunk group without members), or indicates a lack of trunk resources (for example, all trunk members are maintenance busy or all in-service members are busy on a call). "Network" = Clearing received from DS1. The disconnects the endpoint. The endpoint with the disconnect notification capability disconnects without notifying the MCU. "Not-MCU" = The dial-out destination numbers of the "CAS" extensions terminate to numbers that are not dial-in cascade MCU extensions. "No-ring" = The is up for 30 seconds and no ringing is detected. "Reorder" The MCU CPTR resources detect that no network trunks are available to place the call. See "Dial-out" for a description of CPTR usage.

`Drop Reason (cont'd)`	"Pre-AnsDrop" = The call disconnects an endpoint answers. The network, an endpoint, or a terminal adapter may cause the disconnect. This drop reason differs from 'No-answer,' which indicates that a 60-second timeout occurs during alerting. In this case, the call drops before the 60-second timer expires. Some busy endpoints that are connected through terminal adapters display this behavior. "Resource" = MCU cannot provide resources (VC or MMI) when calls arrive or lose their resources during the call. Calls can lose resources when they are Out of Service, busied out by craft, or in use by system maintenance. If the DS1/MMI cable is disconnected, this drop reason can also occur. If a resource problem exists when the call arrives, it gets reorder (fast busy) and is not disconnected by the MCU. "Password" = The user enters a wrong password or the audio add-on user does not enter it within the specified time period. The audio add-on user gets one attempt to enter a correct password and has about 10 seconds between digits (inter-digit timing). "System" = MCU restarts (level 2) disconnect all calls. "UIN-Inv" = Users enter invalid User Identification Numbers. "Unknown" = The system cannot determine the disconnect cause. "Wrong-num" = The MCU CPTR resources SDN cause values detect an incorrectly-dialed destination number. See "Dial-out" for details. "UCC" = The controller intentionally disconnects the endpoint.
`Drop Code`	A detail code complementing the Drop Reason. Additional bonding-related information is available from the supplementary BONDing Drop Codes described above.
`AC Num`	Administered Connection Numbers. (1–128) AC numbers can further diagnose problems by combining status conference information with the **status administered connection** command, and data stored in the error and alarm logs.
`Ports Trunk`	The data endpoint that the channel is using.
`Ports Video`	The MMI port for the channel.
`Ports Aud`	If the endpoint type is not "UCC," the VC audio encoder port (which is always paired to a decoder port) for the channel (only the first channel). appears together with the ESM data port in the endpoint's channel 1 port slot position of the `Port Aud/ESM` column. For "UCC" endpoints, the channel 1 port slot position displays allocated Call Classifier resources.
`Ports ESM`	Expansion Service Module MMI data port. This field is always blank.

`Ports BONDng`	The MMI port used for channel BONDing.
`Fr Err`	Frame error counter. A circular hex counter (0-FF) to indicates framing error occurrences.

Page 3 - Conference Information

This section describes fields that are specific to endpoint-level command output.

```
status conference endpoint                                          page 3 of 6

CONFERENCE INFO:  Broadcaster: xx (See-Me)
                   Return Vid: xx

---------- MODE COMMANDS/COMMUNICATION MODES ------|  EPT MISC   | ------- FAW --
 CMD  STAT    CONF         EPT-IN        EPT-OUT   |------ I  O  |       CH1 CH2
----- ---- ------------ ------------- -------------|  AIM: y  n  |       --- ---
XRATE: y   384          384           384          |  VIS  y  n  | A-OUT:  y   n
AUDIO: n   G728         neutral       G728         |  MIS:    n  |  A-IN:  y   n
56/64: y   derestrict   derestrict    derestrict   |  MCV: n     | M-FRM:  y   n
VIDEO: n   H.261        H.261         H.261        |-------------|   MFA:  y   n
  MLP: y   MLP-off      MLP-off       MLP-off      | TALK: y 05  |   MFN:  y   n
H-MLP: y   H-MLP-off    H-MLP-off     H-MLP-off    | VFCV: y 01  |   FAS:  y   n
  LSD: y   LSD-off      LSD-off       LSD-off      | BCTK: n 02  |MCUFAL: 00  00
  HSD: y   HSD-off      HSD-off       HSD-off      | RTTK: y 01  | FEFAL: 00  00
CRYPT: y   encrypt-off  encrypt-off   encrypt-off  | BCLS: n     |
  S/M: y   N-comp-6B-H0 N-comp-6B-H0  N-comp-6B-H0 | RTLS: n     |
                                                   | HYPR: n 00  |
                                                   |DMUTE: n 00  |
                                                   |H.261: n 00  |
                                                   | VFMT: n 00  |


Help line
enter command:
```

Screen 8-31. Page 3 of 6: status conference *x* endpoint *y*

Conference Info. This information primarily applies to full-screen conferences. The `Broadcaster` field applies to quad-screen presentation mode conferences.

Field descriptions

`Broadcaster`	The current broadcaster endpoint number. The following keywords qualify the broadcaster: “Broadcast” = A broadcast mode broadcaster. “Chair” = The chair designates the broadcaster. “See-Me” = The endpoint initiates a MCV broadcaster request. “Presenter” = A presentation mode broadcaster. “Rollcall” = The UCC designates the broadcaster by the Rollcall feature. “UCC” = The UCC designates the broadcaster. “VAS” = A Voice Activated Switching broadcaster.
`Next Broadcaster`	The endpoint number that is selected to be the next broadcaster.
`Return Vid`	The endpoint number that is the current return video. The return video is qualified with the following keywords: “blank” = VAS, Chair action, UCC action, or endpoint MCV requests force the previous broadcaster to be the return video. The broadcaster qualifier identifies the action that forced this endpoint to become return video. “Autoscan” = Auto scan return video, when conference mode broadcasts with auto scan. “Browse” = The UCC designates the return video with the Browse feature. “VAS” = A Voice Activated Switching return video.
`Next Return Vid`	Indicates the endpoint number selected to be the next return video.

Mode Commands/Communication Modes. This is a collection of incoming and outgoing bandwidth allocations for the multiplex. The Incoming data is the rate at which the MCU thinks the endpoint is communicating based on the Bit-rate Allocation Signal (BAS) codes received from the endpoint/codec and the capabilities the MCU has declared. The Outgoing data is the rate from the MCU toward the endpoint. The following are column definitions for this section of page 3.

Field descriptions

CONF	The desired conference operating mode. This may differ from the endpoint in (EPT-IN) or endpoint out (EPT-OUT) modes.
CMD	Labels for the various types of mode commands
STAT	Conference and incoming mode compatibility. “y” = mode compatibility “n” = modes incompatibility.
EPT-IN	defines the communication modes coming in from an endpoint.
EPT-OUT	Defines the communication modes sent to an endpoint based on the number of connected channels and the endpoint’s capabilities.

The following are field definitions for the Mode Commands/Communication Modes section of Page 3.

XRATE	One of the supported rates in Table 8-12 on page 8-347:

Table 8-12. Supported Transfer Rates

XRATE	Bandwidth of the Call
2x64	2B (2x56 or 2x64)
128	112kbps or 128kbps
196	168kbps or 196kbps
256	224kbps or 256kbps
320	280kbps or 320kbps
384	336kbps or 384kbps
512	512kbps
768	768kbps
1472	1472kbps
1536	1536kbps‘
1920	1920kbps

Field descriptions

`XRATE (cont'd.)`

XRATE may be 64 when the endpoint dials in, or in the event that problems occur. It implies that only one B channel is in use.

`AUDIO`

Conference and endpoint Audio rates (kbps bandwidth) must be the same. Their modes are not necessarily the same. When the audio rate of the conference and the endpoint differ, the endpoint's audio interworks, but the endpoint's video is invalid. MCU may or may not send video to such an endpoint.

Table 8-13 on page 8-348 summarizes expected endpoint audio modes with different transfer rate configurations, facility bandwidths, and conference modes. It includes endpoints that support the highest common audio mode (HC audio) when the administered mode is `auto`. The highest common conference mode depends on the administered bandwidth. A '-' in the table indicates 'does not apply.'

Table 8-13. Audio Mode Configurations

Admin Mode (HC Audio)	All Support HC Audio	Xfer Rate	Facility BW	Conf Mode	Expected Endpoint Mode
auto (G.728)	yes	<=128k	-	G.728	G.728
auto (G.728)	no	<=128k	64k	G.711-A-56k	G.711-A-56k B.711-Mu-56k
auto (G.728)	no	<=128k	56k	G.711-A-48k	G.711-A-48k G.711-MU-48k
auto (G.722)	-	>128k	64k	G.722-56k	G.722-56k G.711-A-56k G.711-Mu-56k
auto (G.722)	-	>128k	56k	G.722-48k	G.722-48k G.711-A-48k G.711-Mu-48k
G.728	-	-		G.728	G.728
G.711	-	-	64k	G.711-A-56k	G.711-A-56k G.711-Mu-56k
G.711	-	-	56k	G.711-A-48k	G.711-A-48k G.711-Mu-48k
G.722	-	-	64k	G.722-56k	G.722-56k G.711-A-56k G.711-mu-56k
G.722	-	-	56k	G.722-48k	G.722-48k G.711-A-48k G.711-Mu-48k

Field Descriptions

AUDIO (cont'd.)	Other possible AUDIO mode values include neutral (neutralized I-channel), Au-off, and Frm (no audio signal) which never match conference modes and are unsupported by MCU.
56/64	The 65/64 field derestricts when operating at 64kbps, 128kbps, 192kbps, 256kbps, 320kbps, 384kbps, 512kbps, 768 kbps, 1472kbps, 1536kbps, or 1920kbps per channel speeds; it restricts when operating at 56kbps, 112kbps, 168kbps, 224kbps, 280kbps, 336kbps, 448kbps, and 672kbps per channel speeds. If technicians configure the conference for Nx56kbs operations, endpoint may signal by capabilities or modes that operate at the proper rate. In such a case, when technicians receive derestrict commands while they are in the restrict mode, that do not match conference communication modes, (MISC capability has restrict displayed on Page 4) the STAT 56/64 is y indicating 56/64 compatibility between the conference and the endpoint.
VIDEO	The Video mode: H.261 (recommended), H.CTX (proprietary), H.CTX+ (proprietary), or SG4 (proprietary) indicate that video is on in the direction indicated; and video-off when the video is off.
MLP	Multi Layer Protocol data mode. When technicians administer Data Modes as any-mlp or ww-pcs, MLP modes should be var-MLP. Other values affect video status. MLP modes should be MLP-off when technicians administer Data Modes as none. Other values in this mode affect video status.
H_MLP	The High Speed MLP mode. The HMLP mode should be H-MLP-off. Other values in this mode affect video status.
LSD	Low Speed Data mode. The LSD mode should be LSD-off. Other values in this mode affect video status.
HSD	High Speed Data mode. The HSD mode should be HSD-off. Other values in this mode affect video status.
CRYPT	Encryption mode. The CRYPT mode should be encrypt-off. Other values in this mode affect video status.
S/M	Single/Multi channel interoperability mode. 6B-H0-comp indicates that the sender is interoperating multiple channels and a single channel (for example, 6B and H0). Not-comp-6B-H0 indicates that the sender is not interoperating between 6B and H0. Normally this value is Not-comp-6B-H0. Other values in this mode affect video status.

Endpoint Miscellaneous (EPT MISC) Information. EPT MISC contains miscellaneous states and counters for an endpoint. Flags can `y` or `n`. Counters start with 0x00, increment to 0xff, and wrap around to 0x01. `AIM` and `VIS` are BAS commands that can be sent as input to MCU from an endpoint or as output from MCU to an endpoint

Field descriptions

`AIM`	Audio Indicate Mutes. “y” = For input, this endpoint mutes its audio. MCU does not VAS to an endpoint displaying mute. For output, all other endpoints in the conference mute their audio (have sent AIM to MCU). MCU in turn tells this endpoint (by sending it AIM) that there is no audio output from MCU. “n” = For input, this endpoint does not mute (only if endpoint audio mode is turned on). For output, an audio path opens across the bridge.
`VIS`	Video Indicate Suppressed. “y” = For input, this endpoint suppresses its video (video is muted). For output, the MCU is not sending video to this endpoint because there is no video broadcaster (broadcaster does not join or broadcaster’s video is invalid).
`MIS`	Multipoint Indicate Secondary-status. “n” = For output, the endpoint is a valid source (not necessarily at this moment). n is the correct state for the video. “y” = MIS was sent to an endpoint considered to be a secondary endpoint. The endpoint is included in the audio, but not video portion of the conference. Video is not sent.
`MCV`	Multipoint Command Visualize. “y” = For input, an endpoint requests to become a broadcaster. This is used during Still Frame Graphics and to force “presentation” mode.
`TALK`	“y” = The VC board detects voice energy from the endpoint. The TALK counter indicates the number of starts or stops.
`VRCV`	“y” = The endpoint is receiving video (MCU is sending video to the endpoint). The VRCV counter counts the number of times video sends or does not send to this endpoint.
`BCTK`	Single screen and quad-screen presentation mode conferences. “y” = The endpoint is the video broadcast source. The BCTK counter tallies the number of times this endpoint is the video broadcast source.
`RTTK`	Single screen conferences. “y” = The endpoint is the return video source. The RTTK counter tallies the number of times this endpoint is the return video source.

BCLS	Single and quad-screen presentation mode conferences. “y” = The endpoint is watching the video of the broadcast source.
RTLS	Single screen conferences. “y” = The endpoint is watching the video of the return source.
HYPR	“y” = Endpoint hyperactivity (MCU isolates endpoints from the MMCH conference due to “thrashing” behavior) affects the endpoint’s status as a video source (for 5 seconds of hyperactivity timer). The HYPR counter tallies the number of times this endpoint is hyperactive.
DMUTE	“y” = The VC board or the software in the MCU mute the decoder. VC boards mutes the decoder when it loses MMI or endpoint framing, when it receives invalid audio code words, and when endpoints are hyperactive. MCU software mutes the endpoint decoder of all endpoints besides the broadcaster. (when a mode of a conference is “broadcastw/scan”, broadcast with auto scan) The DMUTE counter tallies the number of times the VC board mutes this endpoint’s decoder.
VFMT	Quad-screen conferences. This field always defaults to n, indicating QCIF format.
H.261	“y” = Video framing loss. The H.261 counter tallies the number of times framing is lost.

Frame Alignment Word (FAW) Information. The FAW section of page 3 provides channel Frame Alignment Word information for the communication paths labeled CHL 1 and 2. For 2B calls, both CHL 1 and 2 are used. For 1-channel calls (112,bps, 128kbps, 168kbps, 196kbps, 224kbps, 256kbps, 280kbps, 320kbps, 336kbps, 384kbps, 768kbps, 1472kbps, 1536kbps, and 1920kbps) only CHL 1 is used. A-OUT, A-IN, M-FRM, MFA, and MFN are flags with y or n.

Field descriptions

A-OUT	MCU has endpoint framing.
A-IN	Endpoint has MCU framing
M-FRM	Multichannel frame alignment of both channels in 2B is present.
MFA	Multiframe alignment word is present (required in 2B call).
MFN	Multiframe numbering is present (required in 2B call).

`FAS`	Frame Alignment Signal (FAS) channel number (1 or 2). This number should match the column header.
`MCUFAL`	MCU Frame Alignment Loss (MCUFAL). Counts the number of times the MCU reports lost endpoint FAW or multichannel synchronization (M-FRM) to the endpoint. The MCU a-bit toggles when the MCU gains or loses endpoint multichannel synchronization. This counter starts with 0x00, increments to 0xff, then wraps around to 0x01. The MCUFAL count also displays in the `Fr Err` field on Page 2
`FEFAL`	Far End Frame Alignment Loss (FEFAL). Counts of the number of changes the MCU detects in the endpoint's a-bit (A-OUT). The endpoint a-bit toggles when an endpoint gains or loses MCU framing. This counter starts with 0x00, increments to 0xff, then wraps around to 0x01.

Page 4 - Endpoint Capability Information

This section describes fields specific to endpoint-level command output.

```
status conference endpoint                                          page 4 of 6

                       ENDPOINT CAPABILITY INFORMATION
-------------------------------------------------------------------------------
 VID | vfmt: QCIF   cmpi: 30       H.CTX      SG4     imp
     | da_sfg       qmpi: 7.5      H.CTX+     SG4_sfg
-----|-------------------------------------------------------------------------
MISC | derestrict   S/M  mbe  dcomp     cic
-----|-------------------------------------------------------------------------
  XR | 64 64x2 64x3 64x4 64x5 64x6      384   384x2   384x3   384x4   384x5
     |    128  192  256  320  512  768  1152  1472    1536    1920
-----|-------------------------------------------------------------------------
 AUD | ntrl    711m 711a g728 g722_64   g722_48
-----|-------------------------------------------------------------------------
 LSD | var 300 1200 4800 6400 8000 9600 14.4k 16k 24k 32k 40k 48k 56k 62.4k 64k
-----|-------------------------------------------------------------------------
 HSD | var 64k 128k 192k 256k 320k 348k 512k  768k 1152k  1536k
-----|-------------------------------------------------------------------------
 MLP | var 4k 6.4k 14.4k 16k  22.4k 24k 30.4k 32k  38.4k  40k 46.4k   62.4k
-----|-------------------------------------------------------------------------
HMLP | var 62.4k    68k  128k 192k 256k 320k  384k
-------------------------------------------------------------------------------
```

Screen 8-32. Page 4 of 6: status conference *x* endpoint *y*

Endpoint Capability Information. Fields on this page display if an endpoint declares specific capability. For example, if an endpoint does not declare VID H.CTX capability, the `H.CTX` field does not display.

Field descriptions

`VID` Video and frame rate types that the endpoint supports.

"vfmt" = Does not display if the endpoint has no video capability. All values are blank if an active call or audio-only endpoint exists. Otherwise, values for this field include:

- `FCIF` for full CIF
- `QCIF` for quarter CIF. CIF support implies QCIF support. For larger screens, CIF typically displays sharper resolution video, ZCIF is blocked, but may run at higher frame rates with less clarity. Differences are less observable on very small displays.
- `cfps` and `qfps` are maximum frame rates (frames/second) that the endpoint can receive video for CIF and QCIF operating modes. CIF frame rate values are 30fps, 15fps, 10fps, and 7.4fps. If the endpoint does not support CIF (that is, the vfmt field is QCIF), the `cfps` value should be blank.
- `da_sfg` indicates support for H.261 Still Frame Graphics transfers.
- `H.CTX`, `H.CTX+` and `SG4` are proprietary video format capabilities.
- `SG4_sfg` indicates support for SG4 Still Frame Graphics

`MISC` The `restrict` field and the `56/64` command mode with a `restrict` value indicate that endpoints operate at 56 kbps per channel. Endpoints on 56 kbps conferences must send one or both 2 indications that they are operating at 56 kbps before they become a video source in a 56 kbps conference. If they signal that they are operating at 56 kbps in a 64 kbps or 384 kbps conference, they become an audio-only source, but the MCU continues to send Selected Communication Mode (SCM) toward them when possible.

A MISC capability of `derestrict` and a 56/64 command of `derestrict` together indicate that an endpoint operates at 64 kbps. If either is `restrict`, the conference operates at 56 kbps. Other field values include:

- `dcomp` indicates support for WorldWorx PCS data compliance.
- `mbe` indicates support for Multi Byte Extension. MBE exchanges passwords, terminal names, and other special capabilities, such as, WorldWorx PCS specific features support.
- `cic` (Chair Indicate Capability) indicates chair control capability.

`XR` Transfer rate capabilities. Endpoint speeds over current connections and Px64 Multiplexes.

For 384 kbps (H0) calls, endpoints indicate 384 kbps support, that displays as `384`. On 336 kbps calls, endpoints must signal 384 kbps support. If an endpoint does not indicate support for 384 kbps on a 384/336 kbps conference, the MCU provides Audio Only Communications Mode (ACOM). For a 2B conference, the MCU sets the rate to 2x64, expecting the endpoints to do likewise (`64x2` displays; if this is not displayed, no 64x2 capability exists). Endpoints may remove 2x64 (or the current channel rate: 384, 768, 1472, 1536) from their capability. This is Mode 0 forcing and is a normal procedure. The MCU provides AOCM if the endpoint does not signal support that matches the conference configuration.

`AUD` Audio. Audio protocols that the endpoint supports. `711m` and `711a` are PCM (G.711) and support Mu and A-law, respectively. Endpoints require at least one. The g728 field indicates if G.728 is supported (LB_CELP). This value depends upon the endpoint type and configuration. The g722_48 field indicates endpoint support for G.722 (7 kHz) at both 48 kbps and 56 kbps. The `g722_64` field indicates endpoint support for G.722 at 64 kbps in an unframed (unsupported by the MCU) mode.

`LSD` Low Speed Data conferencing capabilities.

`HSD` High speed Data conferencing capabilities.

`MLP` Multi Layer Protocol Data capabilities.

`HMLP` High Speed MLP data conferencing capabilities.

Page 5 - Endpoint Call Status Information

This page summarizes call-related status for per-channel join counts, join/drop times, drop reasons, drop codes, and auxiliary bonding drop codes. In addition, it contains drop codes and software fields from the previous call. The data on the page is retained. The Endpoint Call Status Information section groups all call-related fields. The only new field in this section is `Join Count`; all other fields are described in Screen 8-29 on page 8-335 and Screen 8-30 on page 8-341.

```
status conference endpoint                                          page 5 of 6

                        ENDPOINT CALL STATUS INFORMATION

     Join   Join  Drop   -------------- Drop --------   --- Previous -----
Chan Count  Time  Time   Reason      Code    BondCode   DropCode  Software
  1:  __    _____ _____  __________  __      __         __       ________
  2:  __    _____ _____  __________  __      __         __       ________
  3:  __    _____ _____  __________  __      __         __       ________
  4:  __    _____ _____  __________  __      __         __       ________
  5:  __    _____ _____  __________  __      __         __       ________
  6:  __    _____ _____  __________  __      __         __       ________
  7:  __    _____ _____  __________  __      __         __       ________
  8:  __    _____ _____  __________  __      __         __       ________
  9:  __    _____ _____  __________  __      __         __       ________
 10:  __    _____ _____  __________  __      __         __       ________
 11:  __    _____ _____  __________  __      __         __       ________
 12:  __    _____ _____  __________  __      __         __       ________
```

Screen 8-33. Page 5 of 6: status conference *x* endpoint *y*

Field descriptions

`Join Count` Tallies the number of times this endpoint joins this conference during this session. This counter starts with 0, increments to 64, and wraps around back to 1.

Page 6 - Administered Connections

This page summarizes information for administered connections associated with this endpoint. This data can be viewed while the conference is active.

```
status conference endpoint                                          page 6 of 6

                    ADMINISTERED CONNECTIONS INFORMATION

     AC                                                        Retry   Failure
Chan Num  Dial-out Number          Connection State            Count   Cause
  1:  ___  ____________________    ____________________        __      __
  2:  ___  ____________________    ____________________        __      __
  3:  ___  ____________________    ____________________        __      __
  4:  ___  ____________________    ____________________        __      __
  5:  ___  ____________________    ____________________        __      __
  6:  ___  ____________________    ____________________        __      __
  7:  ___  ____________________    ____________________        __      __
  8:  ___  ____________________    ____________________        __      __
  9:  ___  ____________________    ____________________        __      __
 10:  ___  ____________________    ____________________        __      __
 11:  ___  ____________________    ____________________        __      __
 12:  ___  ____________________    ____________________        __      __
```

Screen 8-34. Page 6 of 6: status conference *x* endpoint *y*

Field descriptions

`Dial-out number`

Numbers that are dialed out by administered connections for each channel in the call. The dial Out #1 and #2 on page 1 of the forms display the DCP endpoint number. This is particularly useful with bonding dial-out calls.

`Connection State`

The call state of the AC. The following are connection states associated with dial-out ACs:

"enabled" = Transient in nature indicating that an AC is about to enter the "attempting to connect" state.

"disabled" = one of three options:

- The AC reaches an administered retry threshold, and all retries are stopped. To verify this, check the Error Log to see if an error type of `9` is logged against the AC.
- The AC is in a connected state with the far end disconnected.
- The initial channel call is not connected. No dial out call attempt is made for the additional channels until the initial channel has reaches a connected state.

"not scheduled" = Transient in nature, indicating that an AC is about to enter the "attempting to connect" state.

"waiting to retry" = The AC is inactive, waiting for the retry timer to expire. Once the timer expires, the AC sends a dial out call and enters the "attempting to connect" state. In this state, dial out calls fail at least once.

"attempting to connect" = The AC is active, but has not connected.

"connected" = The call associated with the AC is answered and joins cut-thru to the conference.

`Retry Count`

Tallies the attempted retries for this AC during join attempts and does not clear when the AC connects. However, it clears when the Redial feature attempts a new join. This differs from the `Join Count` which counts the number of times the channel joins the conference during this conference session.

`Failure Cause`

An ISDN or CPTR cause value (values lower than 0x7f) records when the last dial out call drops. Values above 0x7f are generated internally. Table 8-14 lists all possible failure cause values displayed by this field and its associated description. The `Failure Cause` value logs in the Error Log and displays with the **display errors** command. (`Err Type` is normally displayed as a decimal.)

Table 8-14. Status AC - Failure Cause Values

Failure Cause (hexadecimal)	Description
0x00 (0t0)	N/A
0x01 (0t1)	Incorrect destination address
0x02 (0t2)	Reason unknown
0x06 (0t6)	Reason unknown
0x10 (0t16)	Normal call clearing
0x11 (0t17)	Endpoint not available
0x12 (0t18)	ISDN timer expired
0x15 (0t21)	Reason unknown
0x12 (0t22)	Destination address changed
0x1C (0t28)	Bad destination or access denied
0x1D (0t29)	Access denied
0x1F (0t31)	Reason unknown
0x22 (0t34)	Trunks unavailable
0x26 (0t38)	Temporary or facility failure
0x29 (0t41)	Temporary or facility failure
0x2A (0t42)	Resources unavailable
0x2C (0t44)	Resources unavailable
0x32 (0t50)	Access denied
0x34 (0t52)	Access denied
0x36 (0t54)	Access denied
0x3A (0t58)	Resources unavailable
0x41 (0t65)	Required capability not implemented
0x42 (0t66)	Required capability not implemented
0x45 (0t69)	Required capability not implemented
0x51 (0t81)	ISDN protocol error
0x52 (0t82)	Required capability not implemented
0x58 (0t88)	Incorrect destination number
0x60 (0t96)	ISDN protocol error
0x61 (0t97)	ISDN protocol error

Continued on next page

Table 8-14. Status AC - Failure Cause Values — *Continued*

Failure Cause (hexadecimal)	Description
0x62 (0t98)	ISDN protocol error
0x64 (0t100)	ISDN protocol error
0x66 (0t102)	ISDN timer expired
0x7f (0t127)	Reason unknown
0xC2 (0t194)	Ring no answer
0xC8 (0t200)	Hi and dry - no feedback detected
0xC9 (0t201)	Cascade link administered wrong
0xCA (0t202)	CPTR not available to detect failure

status data-module

This command displays internal software state information for diagnosis. This command can help locate facilities to which the data module is communicating.

Action/Object	Qualifier	Qualifier Description	Logins	Defaults	Feature Interactions
busyout mis	***extension***	data module extension	init inads craft cust rcust bcms browse	none	none
	print	Report prints if a printer is linked to the SAT. Examples: **status data-module 30000** **status data-module 32770** **status data-module 32770 print**			

Output

For the following output example, the command that was entered is “status data-module 301".

```
status data-module 301

                          DATA-MODULE STATUS

Data Ext/Stn Ext for Stn DM: 301        Service State: out-of-service
        Port/Channel Number: 01C1103    Maintenance Busy? no
         CF Destination Ext:
            Connected Ports:
```

Field descriptions

`Data Ext/Sta Ext for Stn DM`	The data module extension number. The DTDM is an exception: the connected station extension is shown.
`Port/Channel Number`	The port location of the data module (cabinet-carrier-slot-circuit). If the data module specified is a data channel, the channel number is shown instead.
`Service State`	This entry displays the status of the data module; valid states are: — In-service/idle — The data module is present but not in use. — In-service/active — The data module is present and is in use. — Out-of-service — The data module has been removed from service — Disconnected — The data module no longer appears to be present
`CF Destination Ext`	This entry displays the call forwarding destination, if any, of the station.
`Maintenance Busy?`	Whether maintenance is testing the object, “yes” or “no”.
`Connected Ports`	Port locations to which the data module is connected (cabinet-carrier-slot-circuit).

status esm

This command displays the link status and equipment and software revision identifiers for the Expansion Service Module (ESM). See "Expansion Services Module" in Chapter 5, "Routine Maintenance Procedures" for more information.

Action/Object	Qualifier	Qualifier Description	Logins	Defaults	Feature Interactions
status esm			init inads craft	none	none

Output

The following output example is a display of **status esm**.

```
 status esm                                                    page 1 of 1

                          SYSTEM STATUS ESM

                      Link Status: up

VINTAGE
                   RMB Product ID: NA
      MSM Interface Card Vintage: 5.3.d
    UNIX System Revision SNumber: 1.1.4
    ESM Software Revision Number: ESM.4.2.07
    State of ESM Process Manager: 1
```

status firmware download

status firmware download <last>

This command displays the download status for each board. The qualifier <last> displays the last download schedule. This command displays a blank download schedule if there is no active download schedule or there was no previous schedule for the last qualifier to invoke. The following status flags can be displayed:

P: The download to the board is pending.

C: The download to the board was completed successfully.

F: The download to the board failed. Look into the error logs for firmware download for more information about the failure.

A: The board was aborted.

Output

The form is display only.

```
status firmware download                                          Page   1 of    1
                                    STATUS FIRMWARE DOWNLOAD
   Source Board Location: 01C02
Firmware Image File Name: usd1v22r1
       Target Board Code: TN464  Suffix: FP Firmware Vintage: 22
       Schedule Download? Y
   Start Date/Time: 01/12/2001  13:30    Stop Date/Time: 01/14/2001  16:30

    Target          Target          Target          Target          Target
   Location St     Location St     Location St     Location St     Location St
 1.01C04    C   11. _____   _   21. _____   _   31. _____   _   41  _____   _
 2.01C06    C   12. _____   _   22. _____   _   32. _____   _   42  _____   _
 3.01C08    P   13. _____   _   23. _____   _   33. _____   _   43. _____   _
 4. _____   _   14. _____   _   24. _____   _   34. _____   _   44. _____   _
 5. _____   _   15. _____   _   25. _____   _   35. _____   _   45. _____   _
 6. _____   _   16. _____   _   26. _____   _   36. _____   _   46. _____   _
 7. _____   _   17. _____   _   27. _____   _   37. _____   _   47. _____   _
 8. _____   _   18. _____   _   28. _____   _   38. _____   _   48. _____   _
 9. _____   _   19. _____   _   29. _____   _   39. _____   _   49. _____   _
10. _____   _   20. _____   _   30. _____   _   40. _____   _   50. _____   _
20
21
Status: Pending(P) Completed(C) Failed(F) Aborted (A) Skipped (S)
```

status hardware-group

Summary information for the active or last hardware group test displays. This display includes the number and percentage of tested maintenance objects, the percentage of tests passed, failed, and aborted, the time elapsed since initiating the hardware group test, the specific hardware group test command (see "test hardware-group" command) initiated, and the state (active/canceled/complete) of the hardware-group test.

Action/Object	Qualifier	Qualifier Description	Logins	Defaults	Feature Interactions
status hardware-group	***print***	Report sent to printer. Examples: **status hardware-group** **status hardware-group print**	init inads craft cust rcust bcms browse	none	none

Output

The following output example is a display of **status hardware-group**.

```
status hardware-group                          page 1 of 1

                   HARDWARE GROUP STATUS

           Hardware Group Command State:   active
                   Number of MOs Tested:   11070
       Total Number of MOs to be Tested:   12300
                     Percent Complete:       90%
         Elapsed Test Time (hr:min:sec): 0:15:30
                   Repetition Number:        1
             Percentage of Tests Passed:    82%
             Percentage of Tests Failed:    11%
            Percentage of Tests Aborted:     7%


               ENTERED HARDWARE GROUP COMMAND

          Command: test hardware-group system
    Test sequence: short
  Test repetition: repeat 3
   Output Options: failures
 Hardware Options: SPE-interchange
```

Field descriptions

`Hardware Group Command State`	“active” = testing in progress, “canceled” = testing canceled, “complete” = command completed; no testing occurring.
`Number of MOs Tested`	Number of MOs in the specified group (refer to **test hardware-group** command) that the **hardware-group** command tests, including MOs that were tested or aborted due to resource contention.
`Total Number of MOs to be Tested`	Number of MOs in the group specified in the **test hardware-group** command.
`Percent Complete`	Ratio of the completed MOs to the MOs to test in the command.
`Elapsed Test Time`	It tracks completion time for the **hardware-group** command. If a test cancels, then restarts, the time for the cancel period is excluded. The time displays in HH:MM:SS format.
`Repetition Number`	Number of completed iterations that correspond to the “repeat’ or ‘continuously’ option.
`Percentage of Tests Passed`	Percentage of tests that passed.
`Percentage of Tests Failed`	Percentage of tests that failed.
`Percentage of Tests Aborted`	Percentage of aborted tests
`Command`	Hardware-group action objects and qualifiers.
`Test sequence`	Short or long.
`Test repetition`	Displays continuously or the keyword repeats with the entered repeat value.
`Output options`	Selections that were chosen on the input form: auto-page, background, or failures.
`Hardware options`	Selections that were chosen on the input form: all-ports, or SPE-interchange.

status health

This command displays the current system alarm summary, maintenance busy summary, user summary, critical system status, and cabinet status. This same page displays with the **monitor health** command, except that the **status health** output page does not update periodically.

Action/ Object	Qualifier	Qualifier Description	Logins	Defaults	Feature Interactions
status health	***print***	Report prints to SAT-linked printer. Examples: **status health** **status health print**	init inads craft cust nms browse	none	High or Critical Reliability Systems = If standby SPE Emergency Transfer Select Switches change and handshakes are down, the displayed Emerg Trans field is incorrect until handshakes reactivate.

Output

The following output example is a display of **status health**.

```
status health

SPE: A/Auto    B/functional             OCC:  ST:  9%   Cp: 25%  Sm: 10%  Idl:66%
PNC: A-PNC/Auto B-PNC/functional   ALARM:Maj:  0   Min: 2  Wrn:  9
Pwr: Comm   Sync:local   Logins:4   BUSYOUTS:Trk:  0   Stn:  0   Oth:  0
Cab  EmTr  Mj  Mn  Wn  PNC  Cab  EmTr  Mj  Mn  PNC  Cab EmTr  Mj  Mn  Wn  PNC
1    off   0|  7|  0   up
2    off   0|  0|  4   up
3    nia   0|  2|  0   up
                            -Press CANCEL to quit -   9:33 THU APR 16 :1993
```

Field descriptions

`Major`	Number of logged major alarms. (0–200)
`Minor`	Number of logged minor alarms. (0–200)
`Warning`	Number of warnings logged in the alarm file. (0–200)
`Trunks`	Number of maintenance busied out trunks.
`Stations`	Number of maintenance busied out stations.
`Others`	Combined number of maintenance busied out objects excluding trunks and stations.
`Static`	Proportion of the CPU that is dedicated to high priority items (for example, the operating system). This percentage is rounded to the nearest integer, therefore a percentage of 0 means that the occupancy is less than one half of a percent.

SM	Proportion of the CPU that is dedicated to system management or periodic and scheduled maintenance. If many periodic or scheduled maintenance tests perform, this occupancy percentage can be high without affecting service. This percentage rounds to the nearest integer; therefore, a percentage of 0=the occupancy is less than one half of a percent (for example, an 89.6% occupancy displays as 90%).
CP	Proportion of the CPU that is dedicated to call processing. This occupancy has priority over SM and IDLE occupancy categories, and if needed, takes processor time from these occupancy categories. This percentage is rounded to the nearest integer.
Idle	Available proportion of the CPU. This percentage is rounded to the nearest integer.
Active SPE	A or B indicate the active processor complex. When the active processor complex is locked on-line with lock switching on DUPINT, the “lock” option displays; otherwise, “auto” displays.
Duplicated?	Duplication status of the SPE component. “y” = duplication; “n” = no duplication.
SPE Power	Power source for the processor complex. (commercial) When commercial power is unavailable, battery backup is in use and is indicated with “backup”.
Time Source	The current timing source. Display values for this field vary according to timing sources selected. “external” = For Stratum-3 hardware, “internal” = an internal source, such as a tone clock. Primary and secondary timing sources must be administered for the Stratum-4 option. “primary”= the primary administered source is in use, “secondary” = the administered secondary source is in use. “local” = neither the primary or secondary sources are in use.
# Logins	Number of current users.
Cab	Assigned cabinet number (1 to the highest system cabinet number).
Emerg Trans	Settings for emergency transfer switches on the maintenance board for each cabinet. Available options are: auto-on (“auto+” or “a+”), auto-off (“auto-” or “a-1”, “on”, “off”, and “n.a.”. The system defaults to “auto+” or “auto-”. In this state, emergency transfer activate automatically if the cabinet fails (“+”=emergency transfer is activate, “-” = emergency transfer is inactive). “on” = emergency transfer automatically activates. “off” = the cabinet cannot activate emergency transfers. Duplicated SPEs systems = switch settings for both processors of the PPN (cabinet 1) display. In this case, “auto+” is abbreviated “a+”, “auto-” is abbreviated “a-”, and “off” is abbreviated “of”. “on” does not change. “n.a.” = the emergency transfer switch setting is unavailable.
Mj	Number of major alarms associated with the cabinet. Asterisks are used to fill fields when numbers exceed 99.
Mn	Number of minor alarms associated with the cabinet. Asterisks are used to fill fields when numbers exceed 99.

`Wn`	Number of warnings associated with the cabinet. Asterisks are used to fill fields when numbers exceed 99.
`PNC`	Port Network Connectivity (PNC) status for each port networks within a cabinet. When multiple port networks exist, Carriers A, B, and C are listed first and separated from Carriers D and E by a slash (for example, up/up). Availability of the Expansion Archangel Link (EAL) determines PNC status of a port network. “up” denotes that the EAL is available. “dn” denotes that the EAL is unavailable.
`Time of Day`	Current time of day acquired from the system.

status interface

This command displays the number of counters maintained by the PI. (a front end processor implementing packet layers and link layers of the BX.25 protocol and the integrated services digital network (ISDN) procedure-D protocols.

Action/ Object	Qualifier	Qualifier Description	Logins	Default	Feature Interactions
status interface	***location***	(cabinet-carrier-position) of the processor interface (PI board). 1 = the first processor interface in the carrier; 2 = the second processor interface in the carrier.	init inads craft cust rcust bcms browse	1 (one)	none
	print	Report sent to printer. Examples: **status interface a1** **status interface 01a2** **status interface 01b1** **status interface b2** **status interface b2 print**			

Output

The following example is a display of **status interface a1**.

```
status interface a1

                  PROCESSOR INTERFACE STATUS

       Base Level Occupancy(low): 10
      Base Level Occupancy(high): 25
       Primary Queue Audit Error: 4
     Secondary Queue Audit Error: 10
         Translation Audit Error: 12
      Protocol Timer Audit Error: 0
         Hardware Sanity Timeout: 1
         Hardware Resource Error: 12
         Hardware Overload Error: 8
```

status ip-board

status ip-board CCcss

The status ip-board command has the same syntax and output as the status c-lan-ip command except the list of allowed boards is larger. The command can be run on either a TN799 or a TN2302.

NOTE:
This SAT command cannot be run on the other IP-capable DEFINITY board, the MAPD, although somewhat similar commands can be carried out through the MAPD's operating system.

The command status ip-board CCcss returns the data in the first two columns of the following table. The form also shows the time of the last port reset, the last hour start time and end time for the error counter statistics.

Table 8-15. status c-lan-ip CCcss

Field Name on switch output	*output type*		*MIB data*	*Description*
Incoming datagram header errors	Counter	Long	ipInHdrErrors	The number of input datagrams discarded due to errors in their IP headers, including bad checksums, version number mismatch, other format errors, time-to-live exceeded, errors discovered in processing their IP options, etc.
Outgoing datagrams with no route available	Counter	Long	ipOutNoRoutes	The number of IP datagrams discarded because no route could be found to transmit them to their destination. Note that this counter includes any packets counted in ipForwDatagrams which meet this `no-route' criterion. Note that this includes any datagrams which a host cannot route because all of its default gateways are down.
Incoming datagrams received	Counter	Long	ipInReceives	The total number of input datagrams received from interfaces, including those received in error.

Continued on next page

Table 8-15. status c-lan-ip CCcss — *Continued*

Field Name on switch output	*output type*		*MIB data*	*Description*
Incoming datagrams discarded	Counter	Long	ipInDiscards	The number of input IP datagrams for which no problems were encountered to prevent their continued processing, but which were discarded (e.g., for lack of buffer space). Note that this counter does not include any datagrams discarded while awaiting re-assembly.
Outgoing datagrams submitted for transmission	Counter	Long	ipOutRequests	The total number of IP datagrams which local IP user-protocols (including ICMP) supplied to IP in requests for transmission. Note that this counter does not include any datagrams counted in ipForwDatagrams.
Outgoing datagrams discarded	Counter	Long	ipOutDiscards	The number of output IP datagrams for which no problem was encountered to prevent their transmission to their destination, but which were discarded (e.g., for lack of buffer space). Note that this counter would include datagrams counted in ipForwDatagrams if any such packets met this (discretionary) discard criterion.
ICMP Destination unreachable messages	Counter	Long	icmpInDestUnreachs	The number of ICMP Destination Unreachable messages received.
ICMP Redirect message	Counter	Long	icmpInRedirects	The number of ICMP Redirect messages received

status ip-network-region

status ip-network-region

The status ip-network-region x (where x is between 1 to 250 for r and 80 for si/csi/d) will provide the status of the administered inter-network region connection management based on the background maintenance ping test. If the background maintenance test concluded a failed connectivity between two regions x and y, then the matrix for status ip-network-region x, or status ip-network-region y will indicate the result as “f” (failed) between those two regions.

Output

The following example shows the output for the status network-region 2 command.

```
status ip-network-region 2

                   Inter Network Region Connection Management

Region                            (Group Of 32)
        1 2 3 4 5 6 7 8 9 0 1 2 3 4 5 6 7 8 9 0 1 2 3 4 5 6 7 8 9 0 1 2
001-032   1
033-064
065-080









Command:
```

Field descriptions

_	Not administered.
f	Failed (based on background maintenance ping test result).
“1” to “7”	Passed (represents the preferred codec to be used between the two regions and implied meaning that inter-network region connectivity exists between these two regions).

status isdn-testcall

The **status isdn-testcall** command displays the progress of an outgoing ISDN-PRI test call. The status form displays the tested ISDN-PRI B-channel port number, bit error rate, number of bits transmitted, block error rate, number of blocks transmitted, start time, duration specified, duration of test call and reason of termination.

Action/Object	Qualifier	Qualifier Description	Logins	Defaults	Feature Interactions
status isdn-testcall	***group number***	administered number associated with each trunk group.	init inads craft	none	see below
	group member	administered number identifying a particular trunk within a trunk group.			
	number print	Report prints to SAT-linked printer.			
		Examples: **status isdn-testcall 80/1** **status isdn-testcall 78/1 print**			

Feature Interactions

If the bit error rate or block error rate is greater than zero, the ISDN-PRI trunk may be in trouble. The statistical information displayed on the terminal may deactivate the ISDN trunk. This is subjective because the ISDN trunk may be used for data or voice. If the trunk is used for data and the rates are high, the trunk should be deactivated. If the trunk is used for voice, the trunk may not be deactivated. Also, high rates be at risk for some type of power hit.

Output

The following output example is a display of **status idsn-testcall 80/1**.

```
status isdn-testcall 80/1                  Page 1 of   1   SPE A

                           ISDN TESTCALL STATUS

         Bit   Number Block Number          Duration         Reason
         Error Of     Error Of     Start    Duration  Of     Of
Port     Rate  Bits   Rate  Blocks Time     Specified Test   Termination

1B1401   0EE0  4EE7   0EE0  6EE2   25/12:36 120       100    in progress
```

Field descriptions

`Port`	(cabinet/carrier/slot/circuit) of the ISDN-PRI B-channel.
`Bit Error Rate`	The measured bit error count based on the comparison between sent and received bit patterns. (Number displays in scientific notation)
`Number of Bits`	Number of bits generated. (Number displays in scientific notation)
`Block error Rate`	The measured block error count based on the comparison between sent and received bit patterns. (Number displays in scientific notation).
`Number of Blocks`	Number of blocks generated. (Number displays in scientific notation)
`Start Time`	Test call start time. (dd/hh:mm).
`Duration Specified`	Specified run time for the test call. (1-120 minutes, or blank = default of 10 seconds).
`Duration of Test`	Run time for the test call, listed in minutes. “blank” = a default time.
`Reason of Termination`	Reason that the test call terminates: “finished,” “canceled,” “overflow,” “no bits,” “transmission,” “internal fail,” “data corrupt,” “call dropped,” “call rejected,” and “in progress.” “finished” = the test finishes in the specified time. “canceled” = the test call cancels with the **clear isdn-testcall** command. “overflow” = the transmitted bits overflow buffer allocation. “no bits” = no bits are received because the ISDN-PRI test call circuit connection is bad. “transmission” = a data transmission interrupts, probably from a power hit. “call dropped” = the call drops due to an abnormal termination, or inability to cut-through to the other side. “call rejected” = the originating call is not set up properly. “internal fail” = an internal error on the Maintenance/Test circuit pack. “in progress” = the test is still running; “data corrupt” = any other error condition.

status journal-link

The **status journal-link** command displays if the link is up or down. If the link is down, the system displays the number of times the switch tries to initialize the link. A journal printer documents automatic wake-up events, emergency access to attendant events, and housekeeping events when the property management system is not functional. A journal printer may also generate reports for automatic wake-up events and emergency access events at a scheduled time. If system configuration includes two printers, one is for housekeeping events only and the other is for automatic wake-up events and emergency access events.

For general information on journal printer links, see the description of the "busyout journal-printer" command.

Action/Object	Qualifier	Qualifier Description	Logins	Defaults	Feature Interactions
status journal-link	*wakeup-log*	printer that handles automatic wakeup and emergency access to attendant events and scheduled reports.	init inads craft cust rcust bcms browse	none	none
	pms-log	printer that handles pms down events.			
	print	Reports print to SAT-linked printer.			
		Examples: **status journal-link wakeup-log** **status journal-link pms-log** **status journal-link pms-log print**			

Output

The following example is a display of **status journal-link wakeup-log**.

```
status journal-link wakeup-log

                      JOURNAL LINK STATUS

       Link State: up
 Maintenance Busy? no
```

Field descriptions

`Link State`	If extensions are administered in the System Parameters Hospitality form, wakeup-logs or pms-log links are considered to be administered only.
`Maintenance Busy`	Is maintenance testing performing on the link?

status link n

(csi, si, r models with C-LAN circuit pack - Ethernet connection)

This command displays:

- static information about the link
- the data extension and port used, connect speed, and protocol information
- a counter of CHAP failures for PPP links
- time information for PPP and Ethernet links (includes the time of the last reset, the last hour start time, and end time for the error counter statistics).
- the type and number of active applications

The same information that is displayed by the status link command can also be invoked with:

- **status pgate-port** for PGATE links
- **status clan-port** or **netstat link n** for C-LAN links.

Action/Object	Qualifier	Qualifier Description	Logins	Defaults	Feature Interactions
status link	***n***	Number of the administered link. Example: **status link 1**	init inads craft	none	none

Output

The following example shows page 1 of the output from the **status link *n*** command (si w/ TN794 Net Packet/Packet Interface circuit pack).

Link/Port Status form (page 1)

```
status link 1                                                   Page   1 of   3
                              LINK/PORT STATUS
                 Link Number: 1
                 Link Status: connected
                   Link Type: ethernet
                   Link Name: ethernet on link 1
       Service Port Location: 01A0917
 Service Port Data Extension: 2991
               Service State: in-service/idle
                   Node Name: ber1
           Source IP Address: 192.168.10.11
                     Enabled? yes
            Maintenance Busy? no
             Active Channels: 0
```

Field descriptions (page 1)

`Link Number`	Administered link number (assigned by **add/change data-module** command)
`Link Status`	Displays no, yes, unavail, connected, disconnected, enabled, out-of-service, or restarting
`Link Type`	The type of interface according to the physical/link protocol(s) immediately “below” the network layer in the protocol stack (ethernet, ppp, bx.25)
`Link Name`	Administered link name (assigned by **add/change data-module** command)
`Service Port Location`	Administered port location (assigned by **add/change data-module** command)
`Service Port Data Extension`	Administered extension number (assigned by **add/change data-module** command)
`Service State`	Displays: in-service/idle, in-service/active, disconnected, out-of-service, maintenance busy, in-service, inactive, active, idle
`Node Name`	Administered node name for TCP/IP endpoint (assigned by **add/change data-module** command)
`Source IP Address`	IP address administered for node name (assigned with **change node-name** or **add/change data-module** commands)
`Enabled`	y (yes) or n (no)
`Maintenance Busy?`	y (yes) or n (no)
`Active Channels`	Number of active channels

Error Counters form (page 2)

```
status link 1                                                    Page   2 of   3
                          ERROR COUNTERS
  Reset Time: 04/08 14:46
  Last Hour Start Time:                   End Time:
  Incoming Received:       Unicast Pkts   Multicast Pkts   Octets
    Since Reset
    Last Hour
  Incoming Dropped:        Error Pkts     Discard Pkts
    Since Reset
    Last Hour
  Outgoing Transmitted:    Unicast Pkts   Multicast Pkts   Octets
    Since Reset
    Last Hour
  Outgoing Dropped:        Error Pkts     Discard Pkts
    Since Reset
    Last Hour
  CRC Check: 0           Collision Count: 0
```

Field descriptions, page 2

`Incoming received Unicast packets`	The number of subnetwork-unicast packets delivered to a higher-layer protocol.
`Incoming received multicast packets`	The number of non-unicast (subnetwork-broadcast or subnetwork-multicast) packets delivered to a higher-layer protocol.
`Incoming dropped octets`	The total number of octets received on the interface, including framing characters.
`Incoming errored packets`	The number of inbound packets that contained errors preventing them from being deliverable to a higher-layer protocol.
`Incoming packets discarded`	The number of inbound packets which were chosen to be discarded even though no errors had been detected to prevent their being deliverable to a higher-layer protocol. One possible reason for discarding such a packet could be to free up buffer space.
`Outgoing Transmitted unicast packets`	The total number of packets that higher-level protocols requested be transmitted to a subnetwork-unicast address, including those that were discarded or not sent.
`Outgoing multicast packets`	The total number of packets that higher-level protocols requested be transmitted to a non- unicast (subnetwork-broadcast or subnetwork-multicast) address, including those that were discarded or not sent.
`Outgoing transmitted octets`	The total number of octets transmitted out of the interface, including framing characters.
`Outgoing errored packets`	The number of outbound packets that could not be transmitted because of errors.
`Outgoing packets discarded`	The number of outbound packets which were chosen to be discarded even though no errors had been detected to prevent their being transmitted. One possible reason for discarding such a packet could be to free up buffer space.

Processor Channel Status form (page 3)

The example below is for processor channels (page 3 of the form). Information about administered hop channels displays on page 4 of the form.

The processor or hop channel status information can take either 1 or 2 pages on this form, depending on the number of links being reported and their condition. Hop channel information (shown only for BX.25 links using the Processor Interface or PGATE circuit packs) uses only 1 page.

```
status link 1                                                  Page   3 of   3
                          PROCESSOR CHANNEL STATUS

UP: 001, 007, 010-115
199, 300:310

DN: 001-002

PND: 003, 216-220, 299
```

Field descriptions, page 3

NOTE:
A dash (-) or a colon “1” between numbers indicates all numbers including and between the indicated numbers.

UP:	Channels are up.
DN:	Channels are down.
PND:	Channels are in a pending state from the down to the up state (processor channels only)

TCP/IP Applications Currently Active (page 4)

The following is an example of the output of page 4 of **status link n**. The form displays all the TCP/IP socket links that are currently up and active that are using the ethernet link **n** via the CLAN board or the Processor Ethernet interface.

```
status link 1                                                  Page  4  of   4
                  TCP/IP Applications Currently Active


Service Type      Sessions

ALARM1            1
ALARM2            1
CDR1              1
CDR2              1
DOLAN             356
PMS               1
PMS_JRNL          1
PMS_LOG           1
SAT               4
SYS_PRNT          1
```

status logins

status logins [print]

This command will display information about all of the users that are currently logged into the system. This information will contain their login names, location of physical access, and their currently executing command.

The screen does not automatically update, and is a reflection of the system at the time the request was made. Users may have logged off, or on, or the command may have finished executing while the information is being displayed. These updates will not be reflected until the next execution of the command.

The command will take a snapshot of the commands that the users on the system are currently executing. Because of timing, the command could be terminated by the time this command finishes displaying the list (i.e. the active command may not be accurate).

The following is an example of the results of the **status logins** command:

```
status logins                                                          SPE B

                                USER LOGIN INFORMATION

 Login  Type      Location   Aux             Active Command  SessionID

 terrym SYS-PORT  08A1408    01C1901                         3
 snmp   SYS-PORT  04A1907    06D1208                         5
 terrym SYS-PORT  06B0705    09E1201                         4
 snmp   SYS-PORT  04A1904    07E1708                         2
*terrym SYSAM-LCL 01B        1                stat logins    6
 terrym IP        07E0802    192.11.128.148   stat logins    7
```

status pms-link

This command displays the status of the property management system interface link. If the link is up, whether or not a data base swap is taking place between the switch and the property management system (PMS), is displayed. If the link is down, the number of times the switch has tried to set up the link is displayed.

A PMS is a standalone computer system that can be integrated with the switch to enhance the service capability for a hotel/motel.

For general information on PMS links, see the description of the "busyout pms-link".

Action/ Object	Qualifier	Qualifier Description	Logins	Defaults	Feature Interactions
status pms-link	print	Report sent to printer Examples: **status pms-link** **status pms-link print**	init inads craft cust browse	none	none

Output

The following example shows the output from the **status pms-link** command.

```
status pms-link

                      PMS LINK STATUS

    Physical Link State: down
         Protocol State: down
      Number of Retries: 3
       Maintenance Busy? no
```

Field descriptions

`Physical Link State`	`Up`, `down`, or `extension not administered`; link is considered administered only if an extension is given in the System Hospitality form.
`Protocol State`	`up`, `down`, or blank if not administered.
`Number of Retries`	Number of times the switch has tried to set up the link (only displayed when the link is down; range 1-999)
`Maintenance Busy`	`yes` or `no` (technician has or has not busied out the link), blank if PMS link not administered.

status pri-endpoint

This command displays internal software state information for diagnosis and can help locate facilities with which a PRI endpoint is communicating. Status information for each of the B-channels making up the PRI endpoint display in addition to some overall PRI endpoint information.

Action/ Object	Qualifier	Qualifier Description	Logins	Defaults	Feature Interactions
status pri-endpoint	***extension***	PRI endpoint extension to be displayed (see dial-plan).	init inads craft nms browse	none	none
	print	Report sent to printer			
		Examples: **status pri-endpoint 25012** **status pri-endpoint 77868** **status pri-endpoint 66078 print**			

Output

The following example shows the output for the status pri-endpoint 22501 command and assumes the following:

- PRI endpoint ports for extension 22501 are in cabinet 1, carrier B, slot 20, circuit 1 to 6.
- The ports 1 to 3 of the specified PRI endpoint are connected on an active call to ports 13 to 15 of board in location 1B19 (cabinet 1, carrier B, slot 19).
- Ports 4 and 5 of the specified PRI endpoint are idle.
- Port 6 of the specified PRI endpoint is out of service, and background maintenance testing is being performed on the port.

NOTE:
A PRI endpoint can initiate and receive a call on any one or more of the B-channels making up the PRI endpoint.

```
status pri-endpoint 22501                                page 1 of 1


                        PRI-ENDPOINT STATUS

                   Extension: 22501               Width: 6
          Signaling Group ID: 3       B-Channels Active: 3
 Originating Auto Restoration? n         B-Channels Idle: 2


  Port     Service State       Test In Progress  Connected Port
  01B2001  in-service/active          n          01B1913
  01B2002  in-service/active          n          01B1914
  01B2003  in-service/active          n          01B1915
  01B2004  in-service/idle            n
  01B2005  in-service/idle            n
  01B2006  out-of-service-NE          y
```

Field descriptions

`Extension`	PRI endpoint extension
`Width`	Administered number of B-channels associated with the specified PRI endpoint
`Signaling Group ID`	ID number of the signaling group that handles the signaling for the ports in the specified PRI endpoint
`Originating Auto Restoration`	Administered option for the auto restore feature (restores calls originated from this PRI endpoint in the case of network failure): `y` = restoration option enabled `n` = restoration option disabled
`B-Channels Active`	The number of B-channels active on a call
`B-Channels Idle`	The number of B-channels in the in-service/idle state
`Port`	Port locations (cabinet-carrier-slot-circuit) for each of the B-channels making up the PRI endpoint.
`Service State`	Service state of the B-channels: in-service/active, in-service/idle, out-of-service-NE, out-of-service-FE, maint-NE/active, maint-FE/active, maint-NE/idle, and maint-FE/idle. NE (Near End) and FE (Far End) refer to which “end” of the B-channel has placed the facility in the current state. NE refers to the switch and FE refers to the PRI terminal adapter (or any device that terminates the D-channel signaling on the facility).
`Test In Progress`	Whether or not there is any current maintenance testing on the port.
`Connected Port`	Connected port location (cabinet-carrier-slot-circuit) for each of the B-channels active on a call.

status processor-channel

This command displays the status of the specified processor channel and the values of its various counters. A processor channel is 1 of 64 logical channels associated with an SCI link. Each processor channel terminates in the switch processing element with a session.

Action/ Object	Qualifier	Qualifier Description	Logins	Defaults	Feature Interactions
status processor-channel	***channel number*** print	Processor channel number (1-64). Report sent to printer Examples: **status processor-channel 1** **status processor-channel 10** **status processor-channel 64** **status processor-channel 64 print**	init inads craft cust rcust bcms browse	none	none

Output

The following example shows the output from the **status processor-channels 1** command.

```
                        PROCESSOR CHANNEL STATUS

        Channel Number: 1

        Channel Status: Administered but not connected

           Link Number: 3

             Link Type: BX.25

Message Buffer Number: 0

           Reset Count: 0

 Retransmission Count: 0
```

Field descriptions

`Channel Number`	The processor channel number 1-64.
`Channel Status`	Displays the state the session layer protocol is in. The following describes the various session layer states: ■ Channel is not administered. ■ Channel is in a state entering “wait session accept” (WSA). ■ Channel is in a state waiting for a “session accept” message from the far end. ■ Channel is in data transfer state (channel is up and running). ■ Channel is in resynchronization state. ■ Channel is waiting for acknowledgment of disconnect message.
`Channel Number`	The processor channel number 1-64.
Link Type	X.25, Ethernet, or PPP

status psa

See "status tti".

status signaling-group

This command displays the state, type, port location, and state of the Primary and Secondary D-channels within the group. A signaling group is a collection of B-channels signaled for by a designated single D-channel or set of D-channels over an ISDN-PRI.

Action/Object	Qualifier	Qualifier Description	Logins	Defaults	Feature Interactions
status signaling-group	***group identifier*** print	Administered group identifier number (1-8) Report sent to printer Examples: **status signaling-group 1** **status signaling-group 2 print**	init inads craft cust browse	none	none

Output

The following output example shows the output from the **status signaling-group 1** command.

```
status signaling-group 1                    Page 1 of   1   SPE A


                      STATUS SIGNALING-GROUP

      Group ID: 1
          Type: facility associated signaling
   Group State: in-service


                      Primary D-Channel

 Link: 1    Port: 01C1924  Level 3 State: in-service


                     Secondary D-Channel

 Link:    Port:      Level 3 State:
```

Field descriptions

`Group ID`	Numerical ID of the signaling group (1-8)
`Type`	`facility associated signaling`: all members are on a single DS-1 facility. Facility associated signaling groups support only the simplex D-channel configuration. `non-facility associated signaling`: members can be carried by multiple DS-1 facilities. The DS-1 facility is identified across the ISDN-PRI using an explicit facility identifier. In a simplex configuration one D-channel is used to signal for B-channel members, while in a duplex configuration two D-channels are used to signal for B-channel members (one channel is active and the other is used as a backup to the active channel).
`Group State`	`in-service`: one of the D-channels signaling for the group is in service `out-of-service`: neither D-channel in the group is in service **NOTE:** If there is no D-channel backup and the primary D-channel is out-of-service, then the signaling group is in an out-of-service state.
`Link`	Link transporting the D-channel
`Port`	Address of the port transporting either the primary or secondary D-channel
`Level 3 State`	State of the primary or secondary D-channels: `in-service`: a D-channel is “in-service” when it is in the multiple-frame-established state at layer 2 carrying normal call-control signaling at layer 3. `standby`: a D-channel is “standby” when it is in the multiple-frame-established state at layer 2, and not carrying any layer 3 call-control messages on logical link 0,0. `wait`: a D-channel is in a “wait” state when an attempt has been made by one side of the interface to establish layer 3 peer communications as part of the process of going to the “in-service” state, which is transitional in nature. Only when the `ISDN SERVICE` message is sent over the interface, and the far end of the interface responds with a SERVICE ACKnowledge message is the D-channel placed in the “in-service” state.

`maintenance-busy`: a D-channel is “maintenance-busy” when it is not in the multiple-frame-established state at layer 2. This state is entered automatically when an active D-channel is declared failed. A D-channel that has been placed in the “maintenance-busy” state may be placed in the “out-of-service” state without system technician intervention.

`manual-out-of-service`: a D-channel is “manual-out-of-service” when system technician intervention has caused it to be placed in the TEI-assigned state at layer 2. System Technician intervention is required to retrieve a D-channel from this state.

`out-of-service`: a D-channel is “out-of-service” when it is in the TEI-assigned state at layer 2, but is periodically requested by layer 3 to attempt to establish the link.

`no-link`: no link is administered for the D-channel

status sp-link

This displays screen summarizing the operational status of the system printer link: its link state, number of retries, and whether the link is maintenance busy.

Action/Object	Qualifier	Qualifier Description	Logins	Defaults	Feature Interactions
status sp-link	***print***	Report sent to printer Examples: **status sp-link** **status sp-link print**	init inads craft cust rcust bcms browse	none	none

Output

The following example shows the output for the **status sp-link** command.

```
status sp-link                                SPE A


                      SYSTEM PRINTER LINK STATUS

        Link State: up
 Number of Retries:
  Maintenance Busy? no
```

Field descriptions

`Link State`	Operational mode of the link: `up`: the link is administered and a call is setup between the switch and the system printer. `down`: the link is administered, but a call is not setup between the switch and the system printer. `extension not administered`: the link (no system printer extension) is not administered
`Number of Retries`	Number of times the switch has tried to set up the link since a request to set up the link was received (1-999); if more than 999 retries have occurred, `999` still displays. (This field displays only if the `Link State:` field is `down`.)
`Maintenance Busy`	Whether any maintenance testing is being performed on the system printer link: `yes` and `no`: system printer link is administered blank: system printer link is not administered.

status station

This command displays the internal software state information for diagnosis and to help locate the facilities to which the station is communicating.

Action/ Object	Qualifier	Qualifier Description	Logins	Defaults	Feature Interactions
status station	***extension*** print	Station extension (per dial-plan) Report sent to printer Examples: **status station 10020** **status station 83277** **status station 83277 print**	init inads craft cust browse	none	none

Output

The following example shows the output for the **status station 1002** command.

```
status station 1002


                        GENERAL STATUS

 Administered Type: 7405D          Service State: in-service/on-hook
    Connected Type: N/A          Download Status: Pending
         Extension: 1002        Maintenance Busy? no
              Port: 01C0702        SAC Activated? no
       Call Parked? no          User Cntrl Restr: none
  Ring Cut Off Act? no         Group Cntrl Restr: none
CF Destination Ext:
   Message Waiting:
   Connected Ports:


       ACD STATUS            HOSPITALITY STATUS

  Agent Logged In   Work Mode          AWU Call At:
                                           User DND: not activated
                                          Group DND: not activated
                                        Room Status: non-guest room
```

Field descriptions

`Administered Type`	Administered station type
`Connected Type`	The actual type of phone connected to this port, if the information is available.
`Extension`	Station or attendant extension
`Port`	Port location: cabinet-carrier-slot-circuit
`Call Park`	Whether the station has a call parked (`yes` or `no`)
`Ring Cut Off Activated`	Whether ring cut off is activated (`yes` or `no`)
`CF Destination Ext`	Call forwarding destination extension, if any.
`Message Waiting`	Whether there is a message waiting for the station. “AP-SPE”, “AUDIX”, “PMS” or blank if no messages are waiting.
`Connected Ports`	Port locations of the facilities to which the station is connected: cabinet-carrier-slot-circuit
`Agent Logged In`	Displays (underneath) the hunt groups (up to 3) that the agent is logged into

On ACD Call?	Whether the agent is on an ACD call currently (yes or no).
Work Mode	Work mode of each hunt group that an agent is logged into
Service State	In service/on-hook, in service/off-hook, in-service/in-tsa (Terminal Self Administration), out of service, or disconnected.
Maintenance Busy State	Whether maintenance is testing the object (yes or no)
SAC Activated	Whether send all calls is activated (yes or no)
User Cntrl Restr	One or two of the following: none, total, stat-stat, outward or terminate.
Group Cntrl Restr	One or two of the following: none, total, stat-stat, outward or terminate.
AWU Call at	Time that Automatic Wakeup Call is scheduled
User DND	Status of the do not disturb feature.
Group DND	Status of the group do not disturb feature.
Room Status	Whether a room is occupied or not (non-guest room, vacant, or occupied).
Audio port	Will be blank for stations with no established audio path and for telecommuter stations. If a circuit-switched physical station port is used for audio (i.e., the R8 telecommuter station) the audio port appears on page 1 as the service link port.
Audio Connection Type	Shows “ip-tdm”, “ip hairpin”, “ip direct”, or “ip-idle”.

Page 2 displays the part ID of the station, if available.

```
status station 1002                                    Page 2 of x

                           GENERAL STATUS

CONNECTED STATION INFORMATION

                Part ID Number: 108576694
                 Serial Number: 01SP29123456

           Station Lock Active? no
```

Field descriptions

`Part ID Number`	Shows the Part ID Number (comcode) of the telephone. If this field shows Unavailable, then the software was unable to determine the Part ID Number.
`Serial Number`	This is the serial number of the telephone. This field may show Unavailable if the software is unable to determine the Serial Number. This field can also show Errored if the serial number received is not in the correct format.
`Station Lock Active`	Indicates whether the station has been locked using Station Lock.

The following display shows the call's audio is being IP Media Processor ip-hairpinned through a TN2302 Prowler board on this switch.

If the station's audio is connected ip-ip directly from the station to the far end destination, the audio port shown on page 3 equals the station port shown on page 1.

```
status station                                                    Page 3 of X
                           CALL CONTROL SIGNALING
           Switch                          IP
           Port        Switch-end IP Addr: Port   Set-end IP Addr:Port
IP Signaling:                            :                      :
       H.245:
   Node Name:

                             AUDIO CHANNEL
           Switch                          IP
           Port        Other-end IP Addr:  Port   Set-end IP Addr:Port
       Audio:
   Node Name:

   Audio Connection Type: ip-tdm
              Product ID: IP_Phone
 H.245 Tunneled in Q.931? does not apply
     Registration Status: registered-authenticated
             MAC Address: 00:20:fc:le:13:f9
```

Field descriptions

`Mac Address`	The MAC (Media Access Control) address field shows the MAC address received from the IP phone when the phone registers. If the phone registers but is unable to send a MAC address then the field shows "not available". The field is blank if the phone is not registered.

Page 4 of this command generates a snapshot jitter buffer size (ms) and packet loss report for a particular station. This command is available to all login permissions.

Definition

In this instance, jitter is the variability in the amount of time (in milliseconds) that packets are received over the network. When jitter increases, the user experiences a noisy connection, delays, and a general loss of quality, making speech unintelligible.

NOTE:
If you issue a **status station** command for a non-IP station or the connection is hairpinned or shuffled, then the packet loss and jitter size information (page 4) does not appear. See also “Shuffling, Hairpinning, Codec and Inter-Network Management Features” in the *Administration for Network Connectivity for Avaya MultiVantage Software*.

```
status station 78020                                                Page 4 of 4
                                   NETWORK STATUS

      Average Jitter (ms)             Packet Loss Per Second
       Last Ten Seconds                 Last Ten Seconds

              5                                 0          Per Call Info
              4                                 0
              3                                 0      Out of Order Counter: 1
              3                                 0      SSRC Change for Call: 0
              3                                 0        Last Rx Sequence #: 0x882A
              3                                 0        Last Tx Sequence #: 0xE900
              1                                 0
              2                                 0
              2                                 0
              1                                 0

 SUMMARY
 Worst Case this Call (ms): 30         Worst Case this Call: 0
    Average this Call (ms): 23            Average this Call: 0
  Current Buffer size (ms): 30
```

Screen 8-35. Status station

Field descriptions

Average Jitter (ms) Last Ten Seconds	The ten most recent one-second samples of the jitter buffer size for the requested endpoint
Packet Loss per Second Last Ten Seconds	The ten most recent one-second samples of the lost packet information for the requested endpoint
Out of Order Counter	A count of the number of out-of-order packets detected during the current connection

SSRC Change for Call	The number of SSRC changes occurring during the current connection
Last Rx Sequence No.	Last received data packet sequence number
Last Tx Sequence No.	Last transmitted data packet sequence number
Worst Case this Call	Jitter: the worst-case, 1-second jitter buffer size (ms) experienced during the current connection Packet Loss: the worst-case, 1-second packet loss experienced during the current connection.
Average this Call	Jitter: the average jitter buffer size (ms) for the current connection (the running average of all the one-second intervals during the connection) Packet Loss: the average packet loss number for the current connection (running average of all the one-second intervals experienced during the connection)
Buffer Size	The current jitter buffer size

status synchronization

This command displays the location of the DS1 or tone-clock circuit pack that is used for an on-line synchronization reference. The synchronization subsystem provides error free digital communication between the switch and other PBXs, COs, or customer premise equipment. The subsystem is made up of: TDM bus clock, DS1 trunk board, maintenance and administration software resident in the SPE.

Action/Object	Qualifier	Qualifier Description	Logins	Defaults	Feature Interactions
status synchronization	***print***	Report sent to printer Examples: **status synchronization** **status synchronization print**	init inads craft cust browse	none	none

Output

The following example shows the output for the **status synchronization** command.

```
status synchronization


                         SYNCHRONIZATION STATUS

               Stratum Level:4
            Maintenance Name: TONE-BD   Physical Location: 01A
        Switching Capability: Enabled
Excessive Reference Switching: No
```

Field descriptions

`Stratum Level`	Synchronization stratum level (3 or 4)
`Maintenance Name:`	Either `TONE-BD`, `DS1-BD`, or `STRAT-3`.
`Physical Location`	Board location of the selected DS1 or tone-clock circuit pack (cabinet-carrier-slot for a DS1; cabinet-carrier for a tone-clock)
`Switching Capability`	Whether the on-line reference for synchronization can be switched (`Enabled` or `Disabled`)
`Excessive Reference Switching`	High-level description of how many times the synchronization reference has been switched. If excessive reference switching is taking place (sync error 1793 is at threshold), this field displays `Yes`; otherwise `No` displays.

status system

This command displays the status, mode, and operational attributes of the SPE(s), TDM and Packet busses, tone-clock circuit packs, expansion interface links (exp-links), and emergency transfer switch of cabinets in the system.

CAUTION:
This command provides general information about the cabinet status. This information may not display correctly when the cabinet is in a transient period. In this case, wait for 1 minute and enter the command again.

Action/ Object	Qualifier	Qualifier Description	Logins	Default	Feature Interactions
status system	***cabinet***	***1st-cabinet***: PPN ***2nd-cabinet***: 1st EPN ***3rd-cabinet***: 2nd EPN[1] ***all-cabinets***: 3-pg. output - 1 for each cabinet [2] Examples: **status system 1st-cabinet** **status system 2nd-cabinet** **status system 3rd-cabinet** **status system all-cabinets**	init inads craft cust rcust bcms browse	none	none

1 For PPN, and 1st and 2nd EPNs, one page of output displays.
2 The status displayed for a cabinet is always related to that cabinet except in the case of status for EPNs and the SPE attributes. SPE attributes always refer to PPN status regardless of which cabinet is being displayed.

Output

The following example shows the output from **status system all-cabinets**.

```
status system all-cabinets                 Page  1 of  3   SPE B

                         SYSTEM STATUS CABINET 1

                            SELECT  SPE ALARMS    TONE/  SERVICE SYSTEM  SYSTEM
 SPE MODE                   SWITCH  MAJOR MINOR   CLOCK  STATE   CLOCK   TONE
 1A  busyout/not-refreshed  auto      n     y     1A     in      standby standby
 1B  active                 auto      n     n     1B     in      active  active


     SERVICE   CONTROL  DEDICATED       SERVICE  BUS ALARMS   BUS   OPEN BUS
 TDM  STATE    CHANNEL    TONES    PKT   STATE  MAJOR MINOR  FAULTS  LEADS
 1A    in         y         n      1       in     n     n       0      0
 1B    in         n         y


 EMERGENCY   SELECT                SERVICE        CABINET
 TRANSFER    SWITCH    EXP-LINK    STATE   MODE     TYPE
 1A          auto-off  01A01-02A01  out    down     SCC
 1B          auto-off  01B01-02B02  in     active
                       01A02-03A01  in     active
                       01B02-03B02  in     standby
```

Field descriptions

SPE	Switch Process Element (SPE) identifier: 1A or 1B
MODE	SPE modes are different for simplex systems than for duplicated systems. See "SPE Modes" section that follows.
SELECT SWITCH	SPE select switch position: ■ auto: the switch is in the middle position and automatically switches SPE depending upon conditions ■ spe-a: spe-a position ■ spe-b: spe-b position ■ <blank> always appears for the 1A and 1B SPE in a simplex system. In a system with High or Critical Reliability, blank implies a hardware problem with the Duplication Interface circuit pack.
PE ALARMS - MAJOR	Number of Major alarms associated with the SPE complex that affect the fault severity level of this SPE. If the system is simplex system, then the 1B SPE always shows blank.
SPE ALARMS - MINOR	Number of Minor alarms associated with the SPE complex that affect the fault severity level of this SPE. If the system is simplex system, then the 1B SPE always shows blank.
TONE/CLOCK	Location of the tone-clock circuit pack. Valid locations are 1A, 1B, 2A, 2B, 3A, and 3B.
SERVICE STATE	■ in: Tone-Clock is installed and is in-service ■ out: Tone-Clock failed certain maintenance tests and has been removed from service ■ <blank> In simplex systems there is no B-carrier Tone-Clock, and this field displays blank.
SYSTEM CLOCK	Shows which Tone-Clock supplies the system clock for the cabinet displayed: ■ active: Tone-Clock active and supplying system clock ■ standby: Tone-Clock is standby and ready to supply the system clock for this cabinet if the active clock fails. ■ down: Tone-Clock failed some maintenance activity and cannot supply the system clock for this cabinet. ■ unavail: EPN is currently down ■ <blank> If simplex, then the 1B Tone-Clock for the PPN displays blank; if no EPN, then both the 1A and 1B Tone-Clock for this EPN display blank.

SYSTEM TONE	Shows which Tone-Clock circuit pack supplies the system tones for the cabinet being displayed. ■ active: Tone-Clock active and supplying system tones ■ standby: Tone-Clock is standby and ready to supply the system tones for this cabinet if the active clock fails. ■ down: Tone-Clock failed some maintenance activity and cannot supply the system tones for this cabinet. ■ unavail: EPN is currently down ■ <blank> If simplex, then the 1B Tone-Clock for the PPN displays blank. If the system does not have an EPN, then both the 1A and 1B Tone-Clock for this EPN display blank.
TDM	The TDM Bus identifier (1A, 1B, 2A, 2B, 3A and 3B)
SERVICE STATE	Operational state of the TDM Bus circuit pack: ■ in: TDM Bus installed and is in-service ■ out: TDM Bus failed certain maintenance tests and has been removed from service
CONTROL CHANNEL	Whether the control channel is on this TDM Bus (y/n)
DEDICATED TONES	Whether the dedicated tones are on this TDM Bus (y/n)
PKT	Packet Bus identifier (same as the cabinet number: 1, 2, or 3). If the system is running on a X75XE cabinet, all the PKT fields are blank and the following message displays: S75XE does not support Packet Refer to Packet Bus Maintenance descriptions for more information.
SERVICE STATE	The operational state of the Packet Buses: ■ in: Packet Bus in-service and operating normally. ■ out: Packet Bus failed certain maintenance tests and has been removed from service. ■ reconfig: Maintenance/Test circuit pack has swapped one or more signal leads because of lead faults detected during testing (High or Critical Reliability only). ■ open lds: Maintenance/Test circuit pack cannot correct all of the Packet Bus faults. There are open leads, but the Packet Bus is still at least partly functional (High or Critical Reliability System only). ■ unavail: EPN is currently down. ■ <blank> System does not have the Packet Bus feature.
BUS ALARMS-MAJOR	Whether Major alarms exist for packet bus components (y/n)

`BUS ALARMS-MINOR`	Whether Minor alarms exist for packet bus components (y/n)
`BUS FAULTS`	Number of faulty bus leads (defined as shorted to another lead, stuck at some value, or an open lead: 0 - 24). This field may take on any integer between 0 and 24. This field displays blank if: ■ Maintenance/Test circuit pack not present ■ Packet Bus port of the Maintenance/Test circuit pack has been taken out-of-service ■ System does not have the Packet Bus feature
`OPEN BUS LEADS`	Number of open bus leads between the Maintenance/Test circuit pack and bus terminator (0 - 24). This could mean physical damage to the backplane or its connectors or a missing bus terminator. This field displays blank if: ■ Maintenance/Test circuit pack is not present ■ Packet Bus port of the Maintenance/Test circuit pack has been taken out-of-service ■ System does not have the Packet Bus feature.
`EMERGENCY TRANSFER`	Location of the Processor or EPN Maintenance circuit pack containing the Emergency Transfer Select Switch (`1A` and `1B` for the PPN, and `2A` or `3A` for the EPNs)
`SELECT SWITCH`	Emergency Transfer Switch position on the Processor(s) or the EPN maintenance circuit pack and the state of Emergency Transfer in the cabinet display: ■ `on`: If this is a Simplex PPN or an EPN, then designated analog phones in this cabinet are cut through to CO trunk lines only in an emergency situation. In a High or Critical Reliability System, the Emergency Transfer Switches on both SPEs in the PPN must be in the **on** position before Emergency Transfer is invoked for the PPN. ■ `off`: Regardless of Simplex or Duplex, PPN, or EPN, Emergency Transfer is off and cannot be invoked. The switch should only be in this state when a service technician is on sight. ■ `auto-on`: The switch is in the or auto position, however, because of a serious system fault, system software has invoked Emergency Transfer. ■ `auto-off`: Switch in the auto position; because system has no serious faults, system software has not invoked Emergency Transfer ■ `unavail`: EPN is down ■ <blank> If the system is Simplex, then the 1B Emergency Transfer indication for the PPN displays a blank. If the system does not have an EPN, then both the 1A and 1B Emergency Transfer indications for the EPN displays a blank.

`EXP-LINK`

Expansion Links that originate from this cabinet and the locations of the two Expansion Interface circuit packs that make up the link. If the Expansion Link does not exist in the system then a dash (`-`) displays.

- Expansion Link identifiers for the PPN or Cabinet 1: `1A01-2A01`, `1B01-2B02`, `1A02-3A01`, `1B02-3B02`
- Expansion Link identifiers for the first EPN or Cabinet 2: `1A01-2A01`, `1B01-2B02`, `2A02-3A02`, `2B03-3B03`
- Expansion Link identifiers for the second EPN or Cabinet 3: `1A02-3A01`, `1B02-3B02`, `2A02-3A02`, `2B03-3B03`

`SERVICE STATE`

Operational state of the Expansion Interface Link:

- in: Expansion Interface Link installed and is in-service
- out: Expansion Interface Link failed certain maintenance tests and has been removed from service
- <blank> Expansion Interface Link does not exist

`MODE`

- `active`: Expansion Interface Link is in-service and providing the active connectivity between the two cabinets.
- `standby`: Expansion Interface Link is in-service and ready to provide connectivity between the two cabinets should the active link fail.
- `down`: Expansion Interface Link is out-of-service and cannot provide connectivity between the two cabinets.
- <blank> Expansion Interface Link does not exist

`CABINET TYPE`

- `MCC`: Medium Carrier Cabinet (up to 5 carriers, simplex or duplex as a PPN)
- `SCC`: Single Carrier Cabinet (up to 4 carriers, simplex or duplex as a PPN)
- `EMCC`: Enhanced Medium Carrier Cabinet (up to 5 carriers, can only be a simplex or duplex PPN cabinet)
- `ESCC`: Enhanced Medium Carrier Cabinet (up to 4 carriers, can only be a simplex or duplex PPN cabinet)
- `MICRO`: Micro or wall-mounted cabinet (always exists alone as an A carrier in a simplex PPN)

SPE Modes

Simplex SPE Modes

`active`	1A SPE in a simplex system is always the active SPE
`blank`	No 1B SPE in a simplex system

Duplex Active SPE Modes

`active`	This SPE is the active SPE.
`active/ override-on`	This the active SPE; however, it was forced active through a **reset system interchange health-override** command.
`selected`	This is the active SPE; however, the SPE select switches do **not** allow this to become the standby SPE.

Duplex Standby SPE Modes

Standby Mode

`standby`	SPE is held reset, memory shadowed from the active SPE, and ready to take over as the active SPE.

Busyout Modes

`busyout/idle`	SPE busied out and there is no current maintenance activity. The active SPE can be either active or selected.
`busyout/entering`	SPE busied out and in the process of restarting the switch software on this SPE. After the switch software finishes its initialization, the standby SPE is available for maintenance functions on the standby SPE.
`busyout/testing`	SPE busied out, however, the switch software on this SPE has been restarted and is currently in the process of executing a **test** command.
`busyout/ not-refreshed`	SPE busied out, however, the **busyout spe-standby** command was executed at a time when the standby memory was not refreshed. The standby SPE is not able to perform any maintenance or SAT-requested activities until a successful **refresh spe-standby** command is executed.
`busyout/ list-config`	SPE busied out, however, the switch software on this SPE has been restarted and is currently executing a **list configuration** command.
`busyout/status`	SPE busied out, however, the switch software on this SPE has been restarted and is currently in the process of executing a **status card-mem** command.

Maintenance Modes[1]

`maint/init`	SPE in maintenance mode (system restarted within the last 10 minutes). During this time, the standby SPE is not placed into standby mode just in case a core dump is being written to the tape or memory card on the standby SPE.

`maint/idle`	SPE in maintenance mode, but no current maintenance activity. The active SPE can be either active or selected.
`maint/entering`	SPE currently restarting the switch software on this SPE. After the switch software on this SPE finishes its initialization, the standby SPE is available to perform maintenance functions.
`maint/testing`	SPE in maintenance mode executing a **test** command.
`maint/ not-refreshed`	SPE in maintenance mode executing a destructive background maintenance test that has temporarily left the standby memory not refreshed. After the current test finishes, background maintenance refreshes the standby SPE.
`maint/not-tested`	SPE in maintenance mode because previously the active SPE had been selected with the SPE select switches. Since the active SPE was not selected, the standby has not been tested to ensure the standby can enter standby mode. Once the standby is tested successfully, the standby returns to standby mode.
`maint/list-config`	SPE in maintenance mode and currently executing a **list configuration** command.
`maint/save~trans`	SPE in maintenance mode and is currently executing a **save translation** command.
`maint/ save~announce`	SPE in maintenance mode and currently executing a **save announcement** command.
`maint/status`	SPE in maintenance mode and currently executing a **status card-mem** command.
`maint/patching`	SPE in maintenance mode and currently applying a software patch to the standby SPE memory.
`maint/periodic`	SPE in maintenance mode and currently performing periodic background maintenance (performed every two hours if some component of the standby SPE is alarmed).
`maint/scheduled`	SPE in maintenance mode and currently performing daily scheduled background maintenance.
`maint/analysis`	SPE in maintenance mode and currently performing background maintenance testing in response to a reported trouble by some component in the active or standby SPE complex that relates to the standby SPE.
`maint/upgrade`	SPE in maintenance mode and currently performing a software upgrade.
Down Modes[2]	
`down/bad_upgrade`	SPE in down mode (software upgrade attempt failed). The standby SPE remains in down mode until a successful software upgrade is performed.

`down/idle`	SPE in down mode, however, no maintenance activity is currently taking place. The active SPE could be either active or selected.
`down/entering`	SPE in down mode, but is currently trying to restart the switch software on this SPE. As soon as the switch software on this SPE finishes its initialization, the standby SPE is ready to perform background or SAT requested maintenance activity.
`down/mismatch_soft`	SPE in down mode because the software vintage in flash memory of the standby SPE does not match the vintage in the active SPE. The standby SPE remains in down mode until a successful software upgrade is performed.
`down/testing`	SPE in down mode attempting to execute a **test** command.
`down/not-refreshed`	SPE in down mode executing a destructive background maintenance test that has temporarily left the standby memory not refreshed. After the current test finishes, background maintenance refreshes the standby SPE.
`down/analysis`	SPE in down mode and currently performing background maintenance testing to determine if the problem has been corrected.

1 Maintenance modes occur when the standby SPE is taken out of standby mode to perform a maintenance or SAT requested function. Unlike the busyout and down modes, being in maintenance mode implies this SPE can be returned to standby mode when the requested activity is completed, assuming there are no faults in the standby SPE complex. The active SPE could be either active or selected when the standby SPE is in one of the Maintenance modes.

2 The standby SPE is placed in down mode when a fault occurs in the standby SPE complex that would prevent that SPE from performing system functions. Down mode is always associated with STBY-SPE alarms and errors. The active SPE could be either active or selected when the standby SPE is in one of the Down modes.

status trunk

status trunk group# [/ member#] [print]

The status trunk command displays information about the operational status of a single trunk or of all members of a trunk group. You can also use it to locate facilities with which the trunk is communicating.

The **monitor trunk** command displays the same information and updates the screen automatically every minute or on demand.

Parameters

group#/ member#	If you enter a trunk group number without a member number, the information for all members of that group appears as shown in the second screen shown below. If you enter a trunk group and a member number separated by a slash (/), then information for only that member, including some additional fields, appears as shown in the first screen shown below. If you enter a group number followed by a slash (/), the system defaults to member number 1 and displays the member report.

Examples

status trunk 78
status trunk 80/2 print

Output

Trunk Group/ Member	Group and member numbers of specified trunks.
Port	The location of the port associated with the trunk.
Signaling Group ID	For ISDN trunks, the number of the signaling group to which the trunk group belongs. For other trunk types, the field is blank.
Connected Ports	Locations of ports currently connected to the trunk.
Service State	One of the following states is displayed: in-service/active, in-service/idle, out-of-service, out-of-service-NE (Near End), out-of-service-FE (Far End), maint-NE/active, maint-FE/active, maint-NE/idle, maint-FE/idle, pending-in-service, pending-maint, or disconnected. NE (Near End) and FE (Far End) refer to which end of the trunk has placed the facility in its current state. Explanations of these service states for each type of trunk appear in the maintenance object descriptions in Chapter 9, “Maintenance Object Repair Procedures”.
Maintenance Busy	Whether maintenance testing is currently being performed upon the trunk.
CA-TSC State	The status of the call-associated temporary signaling connection, if any. A TSC is a temporary connection set up to pass call information over ISDN-PRI signaling links.
Audio Connection Type	Shows ip-tdm, ip hairpin, ip direct, or ip idle.
Audio Switch Port	Shows a virtual port number (i.e., one starting with T). If a trunk is in ip-idle state, the audio switch port field shows blank.

The following display shows a typical result when **status trunk 20/1** is entered.

```
status trunk 20/1
                                TRUNK STATUS

Trunk Group/Member: 020/001                     Service State: in-service/idle
              Port: 01D0801                Maintenance Busy? no
Signaling Group ID: 1                          CA-TSC State: none
   Connected Ports:
```

The following display shows a typical result when **status trunk 1/19** is entered.

```
status trunk 1/19                                                          SPE B
                                          TRUNK STATUS

Trunk Group/Member: 01/19                        Service State: in-service/active
              Port: T00123                       Maintenance Busy? no
Signaling Group ID: 1                                CA-TSC state: not allowed
                                                 MM Conference ID: 8
                                                   MM Endpoint ID: 2
   Connected Ports: 01B1431 01C1008
                    S00004

                   Switch                   IP                                IP
                  Port    Near-end IP Addr: Port              Far-end IP Addr : Port
          Q.931: 12B1217 xxx.xxx.xxx.xxx : nnnnn            xxx.xxx.xxx.xxx : nnnnn
          H.245: 12B1217 xxx.xxx.xxx.xxx : nnnnn            xxx.xxx.xxx.xxx : nnnnn
G.711-MU     Audio: 12B1108 xxx.xxx.xxx.xxx : nnnnn               xxx.xxx.xxx.xxx
: nnnnn

H.245 Tunneled in Q.931? no
  Audio Connection Type: ip-tdm
```

For an ip-TDM call, the audio switch port field shows one of ports 1-8 on a TN2302 Prowler board.

```
status trunk 1/19                                                          SPE B
                                          TRUNK STATUS

Trunk Group/Member: 01/19                        Service State: in-service/active
              Port: T00123                       Maintenance Busy? no
Signaling Group ID: 1                                CA-TSC state: not allowed
                                                 MM Conference ID: 8
                                                   MM Endpoint ID: 2
   Connected Ports: S00004

                   Switch                   IP                                IP
                  Port    Near-end IP Addr: Port              Far-end IP Addr : Port
          Q.931: 12B1217 xxx.xxx.xxx.xxx : nnnnn            xxx.xxx.xxx.xxx : nnnnn
          H.245: 12B1217 xxx.xxx.xxx.xxx : nnnnn            xxx.xxx.xxx.xxx : nnnnn
G.711-MU     Audio: 12B11   xxx.xxx.xxx.xxx : nnnnn               xxx.xxx.xxx.xxx
: nnnnn

H.245 Tunneled in Q.931? no
  Audio Connection Type: ip hairpin
```

For an ip-medpro-ip hairpin call, the audio switch port field shows a cabinet and slot, but not a port, on a TN2302 Prowler board.

```
status trunk 1/19                                                        SPE B
                                        TRUNK STATUS

Trunk Group/Member: 01/19                        Service State: in-service/active
              Port: T00123                       Maintenance Busy? no
Signaling Group ID: 1                                CA-TSC state: not allowed
                                                 MM Conference ID: 8
                                                   MM Endpoint ID: 2
   Connected Ports: S00004

                  Switch                   IP                                  IP
                 Port    Near-end IP Addr: Port              Far-end IP Addr : Port
          Q.931: 12B1217 xxx.xxx.xxx.xxx : nnnnn            xxx.xxx.xxx.xxx : nnnnn
          H.245: 12B1217 xxx.xxx.xxx.xxx : nnnnn            xxx.xxx.xxx.xxx : nnnnn
G.711-MU     Audio: T00123  xxx.xxx.xxx.xxx : nnnnn               xxx.xxx.xxx.xxx
: nnnnn

H.245 Tunneled in Q.931? no
  Audio Connection Type: ip direct
```

The following display shows a typical result when **status trunk 1** is entered for a trunk group with two members.

```
status trunk 1

                        TRUNK GROUP STATUS

Member   Port      Service State     Mtce Busy  Connectd Ports
01/01    01A0101   in-service/idle    no        01A0501  02B0607
01/02    04A0702   in-service/idle    no        04C0604
```

This command can generate a snapshot jitter buffer size and packet loss report for a particular trunk group member.

In this instance, jitter is the variability in the amount of time (in milliseconds) that packets are received over the network. When jitter increases, the user experiences a noisy connection, delays, and a general loss of quality, making speech unintelligible.

If you issue a status trunk command for a non-IP station or the connection is hairpinned or shuffled, then the packet loss and jitter size information (page 4) does not appear. See the *Administration for Network Connectivity for Avaya MultiVantage Software* for more information.

```
status trunk 11/3                                        Page   2 of   2   SPE B
                              TRUNK STATUS
NETWORK STATUS

      Average Jitter (ms)         Packet Loss per Second
       Last Ten Seconds              Last Ten Seconds

              0                             0              Per Call Info
              0                             0
              0                             0      Out of Order Counter: 0
              0                             0      SSRC Change for Call: 0
              0                             0        Last Rx Sequence #: 0x1D64
              0                             0        Last Tx Sequence #: 0x1D1B
              0                             0
              0                             0
              0                             0
              0                             0

SUMMARY
Worst Case this Call (ms): 0       Worst Case this Call: 0
   Average this Call (ms): 0          Average this Call: 0
 Current Buffer Size (ms): 30
```

Output, page 4

`Average Jitter (ms) Last 10 Samples`	The ten most recent one-second samples of the jitter buffer size for the requested endpoint.
`Packet Loss per Sec Last 10 Samples`	The ten most recent one-second samples of the lost packet information for the requested endpoint.
`Out of Order Counter`	A count of the number of out of order packets detected during the current connection.
`SSRC Change for Call`	The number of SSRC changes occurring during the current connection.
`Last Rx Sequence No.`	Last received data sequence.
`Last Tx Sequence No.`	Last transmitted data sequence.
`Worst Case this call`	Jitter: the worst-case, 1-second jitter buffer size (ms) experienced during the current connection Packet Loss: The worst-case, 1-second packet loss experienced during the current connection.
`Average this call`	Jitter: the average jitter buffer size (ms) for the current connection (the running average of all the one-second intervals during the connection) Packet Loss: the average packet loss number for the current connection (running average of all the one-second intervals experienced during the connection)
`Buffer size`	The current jitter buffer size.

NOTE:
The information shown on these forms is a snapshot and does not automatically update.

status tsc-administered

The status tsc-administered command displays the operational status of TSC's administered for an administered signaling group. The status represents the state of the TSC according to switched services.

Action/Object	Qualifier	Qualifier Description	Logins	Defaults	Feature Interactions
status tsc-administered	***signaling group***	Administered signaling group number	init inads craft	none	none
	#/tsc index	Number associated with each TSC in a signaling group			
	print	Report sent to printer			
		Examples: **status tsc-administered 1** **status tsc-administered 1/1** **status tsc-administered 1/2 print**			

Output

The following example shows the output for the **status tsc-administered 1/1** command.

```
status tsc-administered 1/1


         ADMINISTERED NON-CALL-ASSOCIATED TSC STATUS

TSC      TSC
Index    State        Establish   Enabled   Congested
1        inactive     as-needed   yes       no
```

Field descriptions

`TSC Index` The administered TSC index (1-64).

`TSC State` State of the administered TSC:

- `inactive`: the administered TSC is not functioning (for example, D-channel out-of-service, or disabled)
- `active`: indicates that the administered TSC is up and user information can be exchanged end-to-end.
- `pending-inactive`: shows that the TSC is being released.
- `pending-active`: the TSC is about to come up

`Establish` The switch responsible for the origination of the administered TSC:

- `as-needed`: TSC is established on an as needed basis
- `permanent`: TSC is permanently established

`Enabled` Indicates if the administered TSC's have been enabled (y/n).

`Congested` Administered TSC congestion history (whether or not the network can handle the receipt of USER INFORMATION messages for the administered TSC):

- `yes`: TSC is congested
- `no`: TSC is not congested
- `clear`: TSC congestion was cleared during its active period

status tti

status tti [print]

Use **status tti** to see the if the TTI background maintenance task is active. If the TTI background maintenance task is active, the screen shows if TTI ports are being generated or removed, the number of TTI-supported boards that have been processed, and the number of TTI-supported boards that have not yet been processed. The screen also shows the elapsed time since the background maintenance task started.

To activate the TTI background maintenance task, enter y in the TTI field on the Feature-Related System-Parameters screen.

Use **status psa** to see the same screen. It shows that the status of PSA is dependent on the state of TTI.

Action/ Object	Qualifier	Qualifier Description	Logins	Defaults	Feature Interactions
status tti **status psa**	***print***	Report sent to the printer Examples: **status tti** **status tti print**	init inads craft cust nms browse	none	TTI background maintenance task is activated by enabling the TTI system parameter on the System-parameters Features screen.

Output

The following example shows the output for **status tti** and **status psa**.

```
status tti
status psa
                              TTI/PSA STATUS

          TTI Background Task State:  completed - all ports translated
                            TTI State:  voice
               # of Boards Completed:  30
         # of Boards Left to Process:  0
                     Percent Complete:  100
     Elapsed Time since Task Started:  0 :0 :1

NOTE: TTI state must be 'voice', TTI task state 'completed' and PSA
      customer-option enabled, for PSA to operate properly
```

Field descriptions

`TTI Background Task State`	`generating TTI ports`
	`removing TTI ports`
	`suspended`
	`not active`
	`completed - all ports translated:` The last background maintenance task completed normally.
	`completed - some ports not translated:` The last background maintenance task stopped when resources were exhausted, and some ports were not translated.

`TTI State`	`off` means that TTI is not enabled `voice, data` shows the type of TTI ports that are being generated or removed
`# of Boards Completed`	Number of TTI-supported circuit packs that were processed by the background maintenance task. The ports on a “completed” circuit pack: ■ if unadministered, were translated as TTI ports ■ if administered, the administration was removed
`# of Boards Left to Process`	The number of TTI-supported circuit packs that were not processed by the background maintenance task.
`Percent Complete`	A ratio of the of number of circuit packs completed to the total number of circuit packs.
`Elapsed Time Since Task Started`	Elapsed time in hours:minutes:seconds since the TTI background task was started. Blank if the task is not active. If the task completed or suspended, shows the elapsed time up to when the job ended.

status val-ip

Use this command to generate an IP-related status report about the VAL circuit pack's LAN connection. See status **c-lan-ip** for field descriptions.

```
status val-ip 1C02

                                IP STATUS

Reset Time: mm/dd/hh:mm
Last Hour Start Time: mm/dd/hh:mm       End Time: mm/dd/hh:mm

Incoming Received:      Octets   Datagrams    Discards    Hdr Errors
  Since reset           1        0                        0
  Last Hour             0        327680       0           4294901760
Outgoing Transmitted:   Octets   Datagrams    Discards    No Routes
  Since reset           65535    0            0           0
  Last Hour             0        0            0           0
Datagrams w/o Routes    ICMP Dest Unreachables      ICMP Redirects
  Since Reset           0                           65535
  Last Hour             0                           0
```

test access-endpoint

This command performs hardware diagnostic tests on all port circuits that are associated with the specified access endpoint extension.

Action/ Object	Qualifier	Qualifier Description	Logins	Defaults	Feature Interactions
test access-endpoint	***extension***	Access endpoint extension (# of digits determined by dial-plan)	init inads craft nms	Test sequence = short; repeat = 1	none
	short	Option for a brief series of nondestructive diagnostic tests.			
	long	Option for a longer, more comprehensive test series (includes a destructive test)			
	repeat number	How many times each test in the sequence is repeated (1-100)			
	clear	This option causes the test sequence (short or long) to repeat until the alarm (if any) is cleared or a single test in the sequence fails.[1]			
	schedule	Command is validated and then a scheduling form displays to schedule execution of the command. The command is then placed in the command queue and is executed at the specified time. The information displayed by the command is sent to the system printer instead of the screen.[2] Examples: **test access-endpoint 25012** **test access-endpoint 45002 sh** **test access-endpoint 45892 l** **test access-endpoint 24389 sh r 4** **test access-endpoint 34899 l r 6** **test access-endpoint 34912 l r 5 schedule** **test access-endpoint 93483 r 2** **test access-endpoint 10022 c** **test access-endpoint 92349 schedule**			

1 If no alarms are registered against the maintenance object then the test sequence is run only once. The ***long clear*** option forces a clear of all alarms if no errors are encountered during testing. The ***short clear*** option only clears alarms pertinent to tests in the short sequence.

2 Refer to the Report Scheduler and System Printer feature specification for more details.

Output

The following example shows the output for the **test access-endpoint 22502** command, and assumes the access endpoint ports for extension 22502 are in cabinet 1, carrier C, slot 11, circuit 1 to 6. The responses are displayed on a port-by-port and test-by-test basis with one line of data for each test result.

```
test access-endpoint 22502 short                  page 1 of 1


                            TEST RESULTS

  Port      Maintenance Name  Alt. Name Test No. Result      Error Code
  01C1101   WAE-PORT          22502       36     PASS
  01C1102   WAE-PORT          22502       36     PASS
  01C1103   WAE-PORT          22502       36     PASS
  01C1104   WAE-PORT          22502       36     PASS
  01C1105   WAE-PORT          22502       36     PASS
  01C1106   WAE-PORT          22502       36     PASS


Command Successfully Completed
```

Field descriptions

`Port`	Port address (cabinet-carrier-slot-circuit)
`Maintenance Name`	The name of maintenance object (wideband access endpoint = WAE-PORT; single port access endpoint = TIE-DS1)
`Alt. Name`	The extension number of the access endpoint
`Test No`	The test being executed
`Result`	Test result: Pass, Abort, Fail, No Board, Disabled
`Error Code`	Numeric code explaining why the release failed or aborted. Refer to the detailed list of codes by test number for each MO.

test alarms

This command allows automatic testing all of the hardware associated with the active alarms in the alarm log. This command provides an initial query form to help the user narrow the selection of alarmed objects. After submitting the query form, the system tests the hardware associated with the selected alarm log entries. The results display in standard test output and status information display on the message line as the command progresses.

Several alarms may be logged against a single maintenance object, each alarm representing a different problem. Even if there are multiple entries in the alarm log for a single object, the **test alarms** command only tests each physical object once.

Action/ Object	Qualifier	Qualifier Description	Logins	Defaults	Feature Interactions
test alarms	***auto-page***	New screen displays when current screen fills[1]	init inads craft nms	Test sequence = short; repeat = 1	See below
	failures	Only the failures (hardware, aborts, conflicts, EPN-down) display			
	step	Allows “stepping” to the next or previous alarm (current alarm not tested)[2]			
	short	Option for a brief series of nondestructive diagnostic tests.			
	long	Option for a longer, more comprehensive test series (includes a destructive test)			
	repeat number	How many times each test in the sequence is repeated (1-100)			
	clear	This option causes the test sequence (short or long) to repeat until the alarm (if any) is cleared or a single test in the sequence fails.[3]			
	schedule	Command is validated and then a scheduling form displays to schedule execution of the command. The command is then placed in the command queue and is executed at the specified time. The information displayed by the command is sent to the system printer instead of the screen.[4] Examples: **test alarms** **test alarms step failures** **test alarms long clear auto-page** **test alarms long failures**			

1 If ***auto-page*** option is not specified, the screen does not refresh once filled, and testing stops until the user presses PAGE (continue) or CANCEL (halts testing).

2 Press CANCEL to abort the command, ENTER to test the currently displayed alarm, NEXT ALARM (function key) to move to the next alarm, and PREV ALARM (function key) to move to the previous alarm without testing the currently displayed alarm. If this option is entered, then the NEXT ALARM (function key) or PREV ALARM (function key) can be pressed at any time during the command, even during test results. If NEXT ALARM or PREV ALARM is pressed during a test, the test is aborted, testing of the current alarm stops, and the next or previous alarm displays. If the first alarm is displayed and PREV ALARM is pressed, then the last alarm is displayed. If the last alarm is currently displayed and the NEXT ALARM is requested, then the first alarm displays. The only way to terminate this command is to press CANCEL**.**

3 If no alarms are registered against the maintenance object then the test sequence is run only once. The ***long clear*** option forces a clear of all alarms if no errors are encountered during testing. The ***short clear*** option only clears alarms pertinent to tests in the short sequence. SEE WARNINGS BELOW.

4 Refer to the Report Scheduler and System Printer feature specification for more details.

WARNING:
Executing a clear with short option may not clear all alarms, even if all tests pass.

WARNING:
Since the "clear long" options clear all counters if tests pass, it is possible for firmware counters to be cleared even when a problem exists. In some cases customer service might degrade since calls may be routed over defective equipment.

Feature Interactions

With the enhancement of multiple maintenance users, there may be a possibility of two users attempting to test the same physical hardware (for example, one using the **test alarms** command and another using the **test board** command). If this command attempts to test a board that is currently being tested by another user, a error message displays.

Options form

After entering **test alarms**, an options form for alarm selection appears.

```
test alarms repeat 1


            HARDWARE TEST ALARM QUERY

    The following options control which alarms will be tested.

    ALARM TYPES
          Major? y_     Minor? y_    Warning? y_

        REPORT PERIOD
         Interval: m_  From: __/__/__:__  To: __/__/__:__

    EQUIPMENT TYPE ( Choose only one, if any, of the following )
                            Cabinet: __
                      Port Network: __
                      Board Number: ____
                              Port: ______
                          Category: ________
                         Extension: _____
            Trunk ( group/member ): __/__
```

Field descriptions (Hardware Test Alarm Query)

`Alarm Types` The type of alarm to be tested: put **y** or **n** in the field(s) to selects one or a combination of alarms.

`Interval` Tests alarms for the last hour (**h**), last day (**d**), last week (**w**) or all (**a**) [default].

`From` Test alarm from the specified time specified (*mm*/*dd*/*hh*/*mm*). If no `from` date is entered, then no checking is done and the alarms active since a month prior to the current time are reported.

`To` Test alarms associated with records to the specified time specified (*mm*/*dd*/*hh*/*mm*). If no `to` date is entered, any alarm active after the `from` date is selected.

`Equipment Type` The technician can choose between five different equipment types. If there is no input to any of these fields, the system defaults to all the equipment. The user can select one of the following fields:

- `Cabinet`: tests alarms associated with a particular cabinet (1-3).
- `Port Network`: tests all alarms associated with a particular port network (1-3).
- `Board Number`: tests all alarms associated with a particular circuit pack (**PCss**, default cabinet = 1).
- `Port`: tests all alarms associated with a particular port on a circuit pack (**PCsspp**, default cabinet = 1).
- `Category`: Alarms for a particular equipment category
- `Extension`: Alarms associated with an extension number
- `Trunk` (group/member): tests all alarms associated with a particular trunk group or trunk group member, *XX*/*YY*, where the group identifier tests all alarms associated with a trunk group (*XX*/__), and the group identifier *and* member identifier are both entered to test all alarms associated with a specific trunk group member (*XX*/*YY*).

Output

The following example shows the output from the **test alarms** command (query form left empty by pressing ENTER). The responses display on a test-by-test basis with one line of data for each test result.

```
test alarms                                                          Page   1

                                  ALARM ENTRY
Port       Maintenance On   Alt     Alarm   Svc    Ack?  Date        Alarm
           Name        Brd? Name    Type    State  1 2   Alarmed     Count

01C03      UDS1-BD     n            WARNING              03/06/16:48 1/4

                                  TEST RESULTS
Port      Maintenance Name  Alt. Name Test No. Result            Error Code

01C03     UDS1-BD                     138      NO BOARD
01C03     UDS1-BD                     139      NO BOARD
01C03     UDS1-BD                     140      NO BOARD
01C03     UDS1-BD                     141      NO BOARD
01C03     UDS1-BD                     142      NO BOARD
01C03     UDS1-BD                     143      NO BOARD
01C03     UDS1-BD                     144      NO BOARD
01C03     UDS1-BD                     145      NO BOARD
01C03     UDS1-BD                     146      NO BOARD
Testing completed for this object.

                press CANCEL to quit --  press NEXT PAGE to continue
```

Field descriptions

When encountering errors in preparing a particular object to be tested (not inserted, contention, etc.), an error message display in the `TEST RESULTS` section of the output form.

`ALARM ENTRY` section

`Port`	Port location of alarmed object (cabinet-carrier-slot-circuit); same identifier as alarm log
`Maintenance Name`	The name of the maintenance object
`On Board`	Fault detected is on the associated circuit pack (`y`) or off board (`o`).
`Alt Name`	Terminal extension numbers or trunk group numbers
`Alarm Type`	Major, Minor, or Warning
`Service State`	Current service state of the station and trunk ports: `RDY` (ready for service), `OUT` (out of service), or `IN` (in service).
`Ack`	Whether alarm has been acknowledged by the first and second OSS telephone numbers, respectively.

`Date Alarmed`	Day, hour, and minute of alarm.
`Alarm Count`	Count of the current alarm entry versus the total number of alarms to be tested.

Test results section

`Port`	Port address (cabinet-carrier-slot-circuit)
`Maintenance Name`	The name of maintenance object
`Alt. Name`	Alternate way to identify maintenance objects.

If the Object is	The field contains
station	extension
trunk	*xxx/yyy* (*xxx* = trunk group, *yyy* = member)
private CO line	*P/xxx* (*xxx* = private CO line group number)

`Test No`	The test being executed
`Result`	Test result: Fail, Pass, Abort, or No Board. If this field has conflict, another user may be testing this hardware. If this field has `epn-down`, the epn is inaccessible at this time.
`Error Code`	Numeric code explaining why the release failed or aborted. Refer to the detailed list of the codes by test number for each MO.

test analog-testcall

The test analog-testcall command performs facility diagnostic tests on an entire trunk group, an individual trunk group member, an individual trunk port or on all trunks on a board, depending on the options entered. The type of test call, the far-end test line number, and the various other parameters must be administered on the trunk group form before executing the command. Normally, the user should only invoke the full or supervision test. The other options are provided primarily for testing when setting up an ATMS schedule.

Action/ Object	Qualifier	Qualifier Description	Logins	Default	Feature Inter-actions
test analog-testcall	***full***	Executes the most comprehensive test call available using the administered test set type.	init inads craft cust	Test sequence = long; repeat = 1	See below
	no super-vision	Executes a supervision-only test call (approx. 10 sec.) and confirms the presence of the test set at the far end.			
	no-selftest	Executes the “full” test (skips any self-test sequences), saving about 20 seconds on the type 105 transmission test and has no effect on type 100 or 102 transmission tests.			
	no-return-loss	Executes the “full” test (skips any return loss sequences), saving about 20 seconds on the type 105 transmission test and does not have any effect on type 100 or 102 transmission tests.			
	no-st-or-rl	Executes the “full” test (skips all self test and return loss sequences), saving about 40 seconds on the type 105 transmission test and does not have any effect on type 100 or 102 transmission tests.			
	repeat number schedule	How many times each test in the sequence is repeated (1-100)			
		Command is validated and then a scheduling form displays to schedule execution of the command. The command is then placed in the command queue and is executed at the specified time. The information displayed by the command is sent to the system printer instead of the screen.[1]			
		Examples: **test analog-testcall trunk 78 f** **test analog-testcall trunk 78 f schedule** **test analog-testcall trunk 80/1 s r 2** **test analog-testcall trunk 80/1 s r 2 schedule** **test analog-testcall trunk 78/2 no-selftest r 10** **test analog-testcall trunk 78/2 no-selftest r 10 schedule** **test analog-testcall trunk 78 r 4** **test analog-testcall trunk 78 r 4 schedule** **test analog-testcall port 2a1505 no-st-or-rl r 4** **test analog-testcall port 2a1505 no-st-or-rl r 4 schedule** **test analog-testcall board 2a15** **test analog-testcall board 2a15 schedule** **test analog-testcall port 2a1505 no-return-loss** **test analog-testcall port 2a1505 no-return-loss schedule** **te an t 80** **te an t 80 schedule**			

1 Refer to the Report Scheduler and System Printer feature specification for more details.

Feature Interactions

- Additional data is available after running a test. See the "list measurements ds-1" command with the ***test-call*** option for details on how to access the additional data.
- If the trunk is in use by call processing, the test aborts.
- If the trunk is in use by maintenance, the test queues and runs when the current maintenance activity finishes.

Output

The following example shows the output for **test analog-testcall trunk 78**. The responses display on a test-by-test basis with one line of data for each test result.

```
test analog-testcall trunk 78


                            TEST RESULTS

  Port      Maintenance Name  Alt. Name Test No. Result       Error Code
  01C1505   CO-TRK             78/1     845      PASS
  01C1507   CO-TRK             78/2     845      PASS


Command Successfully Completed
```

Field descriptions

`Port`	The port address (cabinet-carrier-slot-circuit) of the maintenance object that is being tested.
`Maintenance Name`	The type of maintenance object that is being tested.
`Alt. Name`	Alternate way to identify maintenance objects. *xxx/yyy* (*where xxx* = trunk group, *yyy* = member)
`Test No.`	The test being executed
`Result`	Test result: Pass, Fail, Abort, Disabled, No Board, or Extra Board.
`Error Code`	Numeric code explaining why the release failed or aborted. Refer to the detailed list of the codes by test number for each MO.

test board

This command performs a set of hardware diagnostic tests on a specified circuit pack. The system first validates that the board exists at the specified location. Then, based on the logical type of board (for example, Analog, Digital, Hybrid, and others), a series of tests perform diagnostics on the board and then returns results of the test along with any possible error codes. Some of the tests can be disabled by administering forms on the administration terminal.

Action/ Object	Qualifier	Qualifier Description	Logins	Defaults	Feature Interactions
test board	***location***	Physical location of the board **PCSS**	init inads craft nms	Test sequence = short; repeat = 1	none
	short	Option for a brief series of nondestructive diagnostic tests.			
	long	Option for a longer, more comprehensive test series (includes a destructive test)			
	repeat number	How many times each test in the sequence is repeated (1-100)			
	clear	This option causes the test sequence (short or long) to repeat until the alarm (if any) is cleared or a single test in the sequence fails.[1]			
	schedule	Command is validated and then a scheduling form displays to schedule execution of the command. The command is then placed in the command queue and is executed at the specified time. The information displayed by the command is sent to the system printer instead of the screen.[2] Examples: **test board 01c11 l** **test board 01c11 l schedule** **test board 02e15 sh r 2** **test board 01c08** **test board 02d12 r 4** **test board 02d12 c**			

1 If no alarms are registered against the maintenance object then the test sequence is run only once. The ***long clear*** option forces a clear of all alarms if no errors are encountered during testing. The ***short clear*** option only clears alarms pertinent to tests in the short sequence. SEE WARNING BELOW.

2 Refer to the Report Scheduler and System Printer feature specification for more details.

Feature Interactions

Destructive long tests on a Switch Node Interface (SNI) board are not allowed unless the board has first been busied out.

Output

The following example shows the output from the **test board 1c07 short** command. The responses display on a test-by-test basis with one line of data for each test result.

```
test board 01C07 short


                          TEST RESULTS

  Port      Maintenance Name  Alt. Name Test No. Result       Error Code
  01C07     ANL-BD                      51       PASS
  01C07     ANL-BD                      52       PASS
  01C0703   ANL-LINE                    35       PASS
  01C0703   ANL-LINE                    48       PASS
  01C0703   ANL-LINE                    36       PASS
  01C0701   ANL-LINE                    35       PASS
  01C0701   ANL-LINE                    48       PASS
  01C0701   ANL-LINE                    36       PASS
  01C0702   ANL-LINE                    35       PASS
  01C0702   ANL-LINE                    48       PASS
  01C0702   ANL-LINE                    36       PASS


Command Successfully Completed
```

Field descriptions

`Port`	Port address (cabinet-carrier-slot-circuit)
`Maintenance Name`	The name of maintenance object
`Alt. Name`	Alternate way to identify maintenance objects.

If the Object is	The field contains
station	extension
trunk	*xxx/yyy* (*xxx* = trunk group, *yyy* = member)
private CO line	*P/xxx* (*xxx* = private CO line group number)

`Test No`	The test being executed
`Result`	Test result: Pass, Fail, Abort, Disabled, No Board, or Extra Board.
`Error Code`	Numeric code explaining why the release failed or aborted. Refer to the detailed list of the codes by test number for each MO.

test card-mem

This command executes a sequence of tests on the memory card in the specified switch processor element. The test sequences in order for both long and short options are listed in the following table:

Test	Short	Long
Memory Card Insertion Test (#695)	X	X
Memory Card Format and Read Test (#696)	X	X
Memory Card Match Test (#697)	X	X
Memory Card Write-Protected Test (#698)	X	X
Memory Card Directory Recovery Test (#699)[1]	X	X
Memory Card Translation Data Integrity Test (#694)		X
Memory Card Erase/Write/Read Test (#693)[2]		X
Memory Card Capacity Test (#1014)		X
Flash Data Consistency Test (#421)		X[3]

1If the directories match, this test runs normally. If the directories do not match, this test attempts to correct the mismatch, and if the flash card is an old 12V flash card, the attempt at correction fails.

2This test fails with old 12V cards, although those cards can indeed be read.

3The “Flash Data Consistency Test” is not executed in simplex systems.

These tests verify the sanity of the memory card device, the basic read/erase/write operations to the memory card, the integrity of the translation data stored in the memory card, the function of 12 volt power supply in TN777B NETCON circuit pack used for memory card erase/write operations, the translation capacity of the memory card, and the consistency of data stored in both memory cards in a High or Critical Reliability system. This command can also help troubleshoot the following hardware errors: CARD-MEM, CAP-MEM, and FL-DATA.

Action/ Object	Qualifier	Qualifier Description	Logins	Defaults	Feature Interactions
test card-mem	***location***	Carrier location where memory card resides: High or Critical Reliability (***a*** or ***b***)[1]; duplicated (***a***, ***A***, ***b***, or ***B***)	init inads craft	Test sequence = short; repeat = 1	See below
	short	Option for a brief series of nondestructive diagnostic tests.			
	long	Option for a longer, more comprehensive test series (includes a destructive test)			
	repeat number	How many times each test in the sequence is repeated (1-100)			
	clear	This option causes the test sequence (short or long) to repeat until the alarm (if any) is cleared or a single test in the sequence fails.[2]			
	schedule	Command is validated and then a scheduling form displays to schedule execution of the command. The command is then placed in the command queue and is executed at the specified time. The information displayed by the command is sent to the system printer instead of the screen.[3]			
		Examples: **test card-mem** **test card-mem a l** **test card-mem b sh r 2** **test card-mem a sch** **test card-mem a c**			

1 Carrier location required on command line

2 If no alarms are registered against the maintenance object then the test sequence is run only once. The ***long clear*** option forces a clear of all alarms if no errors are encountered during testing. The ***short clear*** option only clears alarms pertinent to tests in the short sequence. SEE WARNING BELOW.

3 Refer to the Report Scheduler and System Printer feature specification for more details.

WARNING:
Since the "clear long" option clears all counters if tests pass, it is possible for firmware counters to be cleared even when a problem exists. In some cases customer service might degrade since calls may be routed over defective equipment.

Feature Interactions

The **test card-mem long** command invokes the Memory Card Erase/Write/Read Test. This means that the **save translation** and **save announcement** commands are rejected while the write-to-memory-card operation is active. This test also invokes the Memory Card Capacity Test which determines whether the memory card is more than 98% full. This test is also invoked after the **save translation** command.

In a High or Critical Reliability System, running **test card-mem** command for a memory card in the standby SPE means that the standby SPE is put into the maintenance mode and no SPE interchange is allowed through the **reset system interchange** command or scheduled SPE interchange.

Output

The following example shows the output from the **test card-mem a long** command. The responses display on a test-by-test basis with one line of data for each test result.

```
test card-mem a long                              SPE A


                 TEST RESULTS

  Port    Maintenance Name  Alt. Name Test No. Result      Error Code

  01A     CARD-MEM                     695      PASS
  01A     CARD-MEM                     696      PASS
  01A     CARD-MEM                     697      PASS
  01A     CARD-MEM                     698      PASS
  01A     CARD-MEM                     699      PASS
  01A     CARD-MEM                     694      PASS
  01A     CARD-MEM                     693      PASS
  01A     CAP-MEM                     1014      PASS
          FL-DATA                      421      PASS


Command successfully completed
```

Field descriptions

`Port`	Port address (cabinet-carrier-slot-circuit): cabinet 1, carrier is ***A*** (control carrier A in a simplex system) and either ***A*** or ***B*** (control carriers A and B in a duplex system). The slot and circuit fields in the port address for the CAP-MEM, and CARD-MEM maintenance objects are always blank. The port address for maintenance object FL-DATA is blank.
`Maintenance Name`	The name of maintenance object being tested: ■ CARD-MEM for the memory card ■ CAP-MEM for memory card capacity ■ FL-DATA for the data consistency stored in memory cards (duplicated switch)
`Test No`	The test being executed
`Result`	Test result: Pass, Fail, or Abort
`Error Code`	Numeric code explaining why the release failed or aborted. Refer to the detailed list of the codes by test number for each MO.

test cdr-link

test cdr-link **primary | secondary**
[short | long] [repeat number | clear] [schedule]

The **test cdr-link** command validates that a call detail recording link has been administered and established. The test defaults to “**short**”.

Parameters

[primary | secondary]	A system may have up to two CDR links: a primary that is normally used and a secondary that serves as a backup in case the primary fails. This qualifier specifies which link to test. Primary is the default.

test customer-alarm

This command performs hardware diagnostic tests on the leads of the Processor and EPN maintenance circuit packs, used for customer-provided alarms by closing the appropriate relay for 1 minute. Failure is verified by checking the customer alarm attached to the specified circuit pack.

Action/ Object	Qualifier	Qualifier Description	Logins	Defaults	Feature Interactions
test customer -alarm	***location***	Extension of the data module or data channel to be tested (per dial-plan)	init inads craft	See below	none
	short	Runs test number 115			
	long	Runs test number 115 (same as short test option)			
	repeat number	How many times each test in the sequence is repeated (1-100)			
	clear	This option causes the test sequence (short or long) to repeat until the alarm (if any) is cleared or a single test in the sequence fails.[1]			
	schedule	Command is validated and then a scheduling form displays to schedule execution of the command. The command is then placed in the command queue and is executed at the specified time. The information displayed by the command is sent to the system printer instead of the screen.[2]			
		Examples: **test customer-alarm** **test customer-alarm schedule** **test customer-alarm 02 r 2** **test customer-alarm 01b r 25** **test customer-alarm 01b r 25 schedule** **test customer-alarm 2a** **test customer-alarm 2a sh** **test customer-alarm 01b l schedule** **test customer-alarm 3 c**			

1 If no alarms are registered against the maintenance object then the test sequence is run only once. The ***long clear*** option forces a clear of all alarms if no errors are encountered during testing. The ***short clear*** option only clears alarms pertinent to tests in the short sequence.

2 Refer to the Report Scheduler and System Printer feature specification for more details.

Defaults

The default cabinet is cabinet 1. The default carrier is carrier “a,” except for SPE duplex system PPNs. In this case the carrier has no default and either “a” or “b” must be entered. The default for the remaining parameter is a repeat of 1.

Output

The following example shows the output from **test customer-alarm 02a**.

```
test customer-alarm 02A


                              TEST RESULTS

  Port    Maintenance Name  Alt. Name Test No. Result       Error Code
  02A     CUST-ALM                    115      PASS


Command Successfully Completed
```

Field Definitions

Port	The port address (cabinet-carrier-slot)
Maintenance Name	The maintenance name (always CUST-ALM)
Alt. Name	Not applicable
Test No.	The test number (always 115)
Result	Test result: Pass, Abort, or Fail
Error Code	Numeric code explaining why the release failed or aborted. Refer to the detailed list of codes by test number for each MO.

test data-module

This command performs hardware diagnostic tests on a data module or data channel. Test results are determined by the interface to the digital switch-data line port, digital line port, or network control data channel.

Action/ Object	Qualifier	Qualifier Description	Logins	Defaults	Feature Interactions
test data-module	***extension***	Extension of the data module or data channel to be tested (per dial-plan)	init inads craft cust nms	Test sequence = short; repeat = 1	none
	short	Option for a brief series of nondestructive diagnostic tests.			
	long	Option for a longer, more comprehensive test series (includes a destructive test)			
	repeat number	How many times each test in the sequence is repeated (1-100)			
	clear	This option causes the test sequence (short or long) to repeat until the alarm (if any) is cleared or a single test in the sequence fails.[1]			
	schedule	Command is validated and then a scheduling form displays to schedule execution of the command. The command is then placed in the command queue and is executed at the specified time. The information displayed by the command is sent to the system printer instead of the screen.[2] Examples: **test data-module 30000 l** **test data-module 30000** **test data-module 32000 sh r 2** **test data-module 33000 l r 25** **test data-module 33000 l r 25 schedule** **test data-module 30000 c**			

1 If no alarms are registered against the maintenance object then the test sequence is run only once. The ***long clear*** option forces a clear of all alarms if no errors are encountered during testing. The ***short clear*** option only clears alarms pertinent to tests in the short sequence. SEE WARNING BELOW.

2 Refer to the Report Scheduler and System Printer feature specification for more details.

WARNING:
Since the "clear long" options clear all counters if tests pass, it is possible for firmware counters to be cleared even when a problem exists. In some cases customer service might degrade since calls may be routed over defective equipment.

Output

The following example shows the output from **test data-module 300** The responses display on a test-by-test basis with one line of data for each test result.

```
test data-module 300


                              TEST RESULTS

  Port      Maintenance Name  Alt. Name Test No. Result       Error Code
  01C1103   PDMODULE                      17     PASS


Command successfully completed
```

Field Definitions

`Port`	Port address (cabinet-carrier-slot-circuit)
`Maintenance Name`	The name of maintenance object
`Alt. Name`	Alternate way to identify maintenance objects.

If the Object is	The field contains
station	extension
trunk	*xxx/yyy* (*xxx* = trunk group, *yyy* = member)
private CO line	*P/xxx* (*xxx* = private CO line group number)

`Test No`	The test being executed
`Result`	Test result: Pass, Fail, Abort, No Board
`Error Code`	Numeric code explaining why the release failed or aborted. Refer to the detailed list of the codes by test number for each MO.

test ds1-loop

This command validates that the board exists at the specified location and that the board is a TN464F or TN767E or later suffix DS1 Interface board. Long-duration loopback tests execute for an extended period of time until manually terminated. Short-duration loopback tests return the result of the test to the screen after executing. The **list measurements ds1 summary** command can be used to monitor the status of a long-duration loopback/span test.

Action/ Object	Qualifier	Qualifier Description	Logins	Defaults	Feature Interactions
test ds1-loop	***location***	Physical location of board (**PcSS**)	init inads craft super-user other[3]	ds1/csu-loopback-tests	See below
	cpe-loopback-jack-test-begin	Long-duration loopback test setup through the Customer Premises Equipment (CPE) Loopback Jack. Allows user to specify a loop-up code for the CPE loopback jack if it differs from the default (0x47F). The loop-up code is entered by specifying the number of bits in the loop-up code as well as the actual hexadecimal bit-pattern.[1]			
	far-csu-loopback - test-begin	Long-duration loopback test tsetup through the far-end Channel Service Unit (CSU)			
	one-way-span-test-begin	Long-duration one-way span test			
	end-loopback/ span-test	Terminates long-duration one-way span and loopback testing			
	inject-single-bit-error	Single bit error sent within an active framed 3-in-24 test pattern used in long-duration loopback and span testing			
	ds1/csu-loopback-tests	Sequentially executes the following loopback tests: DS1 Board LoopBack, CSU Module Equipment LoopBack, and CSU Module Repeater LoopBack.[2] Examples: **test ds1-loop 01c08** **test ds1-loop 1-3c03 cpe-loopback-jack** **test ds1-loop 1-3c03 cpe** **test ds1-loop 10c03 end** **test ds1-loop 02d12 fa** **test ds1-loop 02d12 inj**			

1 For TN464F or TN767E or later suffix DS1 boards only. The test aborts if the board has not been taken out of service with the **busyout** command.

2 For TN464F or TN767E or later suffix DS1 boards

3 Logins with `Maintain Switch Circuit Packs` permissions enabled.

Feature Interactions

- Loopback or span tests are not allowed on DS1 boards unless the board has been busied out.
- Only one of the CPE Loopback Jack, far-end CSU, one-way span, or DS1/CSU loopback tests may be active at any given time on a DS1 span.

Output

The following example shows the output for **test ds1-loop 1c07**, and assumes that the board in cabinet 1, carrier c, slot 7 is a TN767E DS1 board. The responses display on a test-by-test basis with one line of data for each test result.

```
test ds1-loop 01C07 ds1/csu-loopback-tests


                                TEST RESULTS

  Port      Maintenance Name  Alt. Name Test No. Result       Error Code
  01C07     DS1-BD                      1209     PASS
  01C07     DS1-BD                      1210     PASS
  01C07     DS1-BD                      1211     PASS


Command Successfully Completed
```

Field descriptions

`Port`	Port address (cabinet-carrier-slot-circuit)
`Maintenance Name`	The name of maintenance object
`Alt. Name`	The alternate means of identifying the maintenance object.
`Test No`	The test being executed
`Result`	Test result: Pass, Abort, Fail, No Board, Disabled, or Extra Bd
`Error Code`	Numeric code explaining why the release failed or aborted. Refer to the detailed list of codes by test number for each MO.

test duplication-interface

This command performs hardware diagnostic tests on the indicated duplication interface circuit pack, under the control of the active SPE that tests the SHDW-CIR, SPE-SELECT, and DUPINT maintenance objects.

- SHDW-CIR is associated with that portion of the duplication interface circuit pack that handles memory shadowing from the active to the standby SPE
- SPE-SELECT is associated with the SPE Select switch located on the front of the circuit pack
- DUPINT is associated with the duplication interface circuit packs other functions, including SPE-to-SPE communication, SAT connection, and environmental maintenance leads.

Action/ Object	Qualifier	Qualifier Description	Logins	Defaults	Feature Interactions
test duplication-interface	location	SPE location of the duplication interface circuit pack (1a, 1b, a, or b)	init inads craft	Text sequence = short; repeat = 1	Duplication-interface failures may prevent SPE switching.
	short	Option for a brief series of nondestructive diagnostic tests.			
	long	Option for a longer, more comprehensive test series (includes a destructive test)			
	repeat number	How many times each test in the sequence is repeated (1-100)			
	clear	This option causes the test sequence (short or long) to repeat until the alarm (if any) is cleared or a single test in the sequence fails.[1]			
	schedule	Command is validated and then a scheduling form displays to schedule execution of the command. The command is then placed in the command queue and is executed at the specified time. The information displayed by the command is sent to the system printer instead of the screen.[2] Examples: **test duplication-interface a** **test duplication-interface b sh** **test duplication-interface a l r 25** **test duplication-interface 1b l r 25 schedule** **test duplication-interface 1a l c**			

1 If no alarms are registered against the maintenance object then the test sequence is run only once. The ***long clear*** option forces a clear of all alarms if no errors are encountered during testing. The ***short clear*** option only clears alarms pertinent to tests in the short sequence.

2 Refer to the Report Scheduler and System Printer feature specification for more details.

Output

The following example shows the output from the **test duplication-interface 1A** command, where A is the active carrier in an SPE duplex system. The responses display on a test-by-test basis with one line of data for each test result.

```
test duplication-interface a long                    SPE A


                                TEST RESULTS

  Port    Maintenance Name  Alt. Name Test No. Result      Error Code
  1A      SHDW-CIR                    285      PASS
  1A      SHDW-CIR                    283      PASS
  1A      SHDW-CIR                    284      PASS
  1A      SPE-SELE                    278      PASS
  1A      DUPINT                      315      PASS
  1A      DUPINT                      275      PASS
  1A      DUPINT                      276      PASS
  1A      DUPINT                      280      PASS
  1A      DUPINT                      271      PASS
  1A      DUPINT                      277      PASS
  1A      DUPINT                      272      PASS
  1A      DUPINT                      274      PASS
  1A      DUPINT                      273      PASS


Command Successfully Completed
```

Field Definitions

`Port`	The port address (cabinet-carrier); always 01A or 01B
`Maintenance Name`	SHDW-CIR, SPE-SELE, or DUPINT.
`Alt. Name`	Not applicable
`Test No.`	The test being executed
`Result`	Test result: Pass, Abort, Fail, No Board, or Disabled
`Error Code`	Numeric code explaining why the release failed or aborted. Refer to the detailed list of codes by test number for each MO.

test eda-external-device-alrm

This command performs a hardware diagnostic test on all or specific port's administered external device alarms. The test PASSES if the external device *is not* reporting an external device alarm and FAILS if the external device *is* reporting an external device alarm. If you are entering a specific port, it must already be administered as an external device alarm port on a maintenance or an analog line port carrier board.

Action/Object	Qualifier	Qualifier Description	Logins	Defaults	Feature Interactions
test eda-external-device-alrm	***physical location***	In addition to the word **physical**, you must enter the physical location (**PCSSpp** for an administered external device alarm analog line port).[1]	init inads craft	Repeat = 1	none
	all	Tests all administered external device alarm ports on analog line and maintenance boards.			
	repeat	How many times each test in the sequence is repeated (1-100)			
	clear	This option causes the test sequence (short or long) to repeat until the alarm (if any) is cleared or a single test in the sequence fails.[2]			
	schedule	Command is validated and then a scheduling form displays to schedule execution of the command. The command is then placed in the command queue and is executed at the specified time. The information displayed by the command is sent to the system printer instead of the screen.[3] Examples: **test eda-external-device-alrm all** **test eda-external-device-alrm all schedule** **test eda-external-device-alrm physical 1major r 10** **test eda-external-device-alrm physical 2c1101 c**			

1 Since the "maintenance board" alarm connections connect to control carrier boards that are in unnumbered slots, the standard port format cannot be used to designate these alarm connections. The special ports **Pmajor** and **Pminor** are used designate the major or minor maintenance board alarm connection for cabinet **P**. The major/minor designation specifies the pair of wires, *not* the alarm level associated with the connection (the "major" port can be administered as a major, minor or warning alarm and the "minor" port can be administered as a major, minor or warning alarm).

2 If no alarms are registered against the maintenance object then the test sequence is run only once. The ***long clear*** option forces a clear of all alarms if no errors are encountered during testing. The ***short clear*** option only clears alarms pertinent to tests in the short sequence.

3 Refer to the Report Scheduler and System Printer feature specification for more details.

Output

The following example shows the output for **test external-device-alarm all**. The responses display on a test-by-test basis with one line of data for each test result.

```
test eda-external-device-alrm all

                              TEST RESULTS

  Port      Maintenance Name  Alt. Name Test No. Result           Error Code

  03major   EXT-DEV           CMS1      120      PASS
  03A2102   EXT_DEV           CMS2      120      FAIL
  01major   EXT-DEV           UPS1      120      PASS
  01minor   EXT-DEV           UPS1      120      PASS
  01c1201   EXT-DEV           UPS1      120      PASS
  03A2101   EXT_DEV           CC temp   120      PASS
  01c1202   EXT-DEV           Audix1    120      PASS
  03minor   EXT-DEV           Audix2    120      FAIL
  04major   EXT-DEV           unknown   120      FAIL
Command successfully completed
```

Field definitions

`Port`	Port address (cabinet-carrier-slot-circuit)
`Maintenance Name`	The name of maintenance object
`Alt. Name`	The alternate means of identifying the maintenance object, in this case, the administered (descriptive) name of the external device alarm.
`Test No`	The test being executed
`Result`	Test result: Pass, Abort, Fail, No Board, Disabled, or Extra Bd.
`Error Code`	Numeric code explaining why the release failed or aborted. Refer to the detailed list of codes by test number for each MO.

test environment

This command performs hardware diagnostic tests of the environment monitoring and control, and emergency transfer functions of both Processor Port Network (PPN) cabinets and Expansion Port Network (EPN) cabinets. Circuit packs involved are the Processor circuit pack (PPN simplex systems), the Duplication Interface circuit pack (PPN duplex systems), and EPN Maintenance circuit packs. The tone/clock circuit pack is involved in tests of the ring generator.

There are 8 Maintenance Objects involved in this testing:

1. DC-POWER tests power availability, battery charging and temperature functions in SCC cabinets only.
2. EMG-XFER tests emergency transfer status
3. EXT-DEV tests external (AUDIX, for example) alarm status for both the SCC and MCC cabinet systems.
4. POWER tests battery backup
5. AC-POWER tests AC power availability
6. CARR_POW tests carrier DC power availability. The long test of CARR_POW includes a power recycle test for non-Processor Element (SPE) carriers and is destructive. There is one instance of CARR_POW for each carrier in the cabinet.
7. CABINET tests air flow and temperature
8. RING_GEN tests ringing voltage are tested in MCC cabinets only.

NOTE:
The processor carrier and its duplicate if present as well as any EPN control carrier or an SCC carrier is not recycled. All port carriers are recycled, and service is interrupted for each port carrier. If a carrier containing an active EI is recycled, communications with that cabinet is disrupted. If a carrier containing an active tone-clock board is recycled, all ports in the cabinet or port network are service disrupted.

Action/Object	Qualifier	Qualifier Description	Logins	Defaults	Feature Interactions
test environment	***location***	Cabinet (1-3); 1 = PPN, 2-3 = optional EPN.	init inads craft	Cabinet = 1; test sequence = short; repeat = 1	See below
	short	Option for a brief series of nondestructive diagnostic tests.			
	long	Option for a longer, more comprehensive series of both destructive and nondestructive diagnostic tests.			
	repeat number	How many times each test in the sequence is repeated (1-100)			
	clear	This option causes the test sequence (short or long) to repeat until the alarm (if any) is cleared or a single test in the sequence fails.[1]			
	schedule	Command is validated and then a scheduling form displays to schedule execution of the command. The command is then placed in the command queue and is executed at the specified time. The information displayed by the command is sent to the system printer instead of the screen.[2] Examples: **test environment** **test environment schedule** **test environment 1 sh** **test environment 1 l r 25** **test environment 01 l r 25** **test environment 01 l r 25 schedule** **test environment 2 l c** **test environment 3 c**			

1 If no alarms are registered against the maintenance object then the test sequence is run only once. The ***long clear*** option forces a clear of all alarms if no errors are encountered during testing. The ***short clear*** option only clears alarms pertinent to tests in the short sequence.

2 Refer to the Report Scheduler and System Printer feature specification for more details.

Feature Interactions

The long test recycles power in some specified cabinet on non-SPE and maintenance board carriers and is destructive. Specifically, the “a” carrier of PPNs and EPNs does not have power recycled. In PPNs containing duplicated SPEs the “b” carrier also does not have power recycled. All port carriers are recycled, and service is interrupted for each port carrier. If a carrier containing an active EI is recycled, communication with that cabinet is disrupted. If a carrier containing an active tone-clock board is recycled, all ports in the cabinet or port network are service disrupted.

Output

The following screen shows the output for **test environment 1** to test a MCC/PPN cabinet. The responses appear on a test-by-test basis with one line of data for each test result.

```
test environment 1


                            TEST RESULTS

  Port    Maintenance Name  Alt. Name Test No. Result       Error Code
  01      POWER                           5      PASS
  01      AC-POWER                       79      PASS
  01A     CARR-POW                      127      PASS
  01B     CARR-POW                      127      PASS
  01C     CARR-POW                      127      PASS
  01D     CARR-POW                      127      PASS
  01E     CARR-POW                      127      PASS
  01      EMG-XFER                      124      PASS
  01      CABINET                       122      PASS
  01      EXT-DEV                       120      PASS
  01      RING-GEN                      118      PASS


Command Successfully Completed
```

Field descriptions

Port	Port address (cabinet-carrier). For all but the CARR-POW maintenance object, only the cabinet value is displayed. For the CARR-POW maintenance object, both the cabinet and carrier values display.
Maintenance Name	The name of maintenance object
Alt. Name	Not applicable
Test No.	The test being executed.
Result	Test result: Pass, Abort, Fail, Disabled
Error Code	Numeric code explaining why the release failed or aborted. Refer to the detailed list of codes by test number for each MO.

The following example show the output for **test environment 2**, where cabinet 2 is an SCC cabinet.

```
test environment 2


                              TEST RESULTS

  Port    Maintenance Name  Alt. Name Test No. Result       Error Code
  02      DC-POWER                      5      PASS
  02      EMG-XFER                    124      PASS
  02      EXT-DEV                     120      PASS
  02      RING-GEN                    117      PASS
  02      RING-GEN                    118      PASS


Command Successfully Completed
```

test failed ip-network-region

test failed ip-network-region

The **test failed ip-network-region** command initiates a real-time ping test for failed network-regions connections. The default is ALL failed ip-network regions. Otherwise, **test failed ip-network-region** xxx, where xxx is in the range of 1-250 for r and 1-80 for si/csi/d)

Output

The following display shows a typical result for **test failed ip-network-region**.

```
test failed-ip-network-region




No failures for indicated region(s)
```

test firmware download

This command runs a series of demand maintenance tests on all hardware in a specified group: a carrier, cabinet, port network, PNC (A or B), SPE, circuit pack or the entire system. When this command is executed, the tests that are run vary depending on the options chosen and types of hardware in the group. Some tests are run concurrently to speed execution, so test results for several maintenance objects may be intermixed.

test hardware-group

This command allows a user to perform a set of hardware diagnostic tests on the whole system, a carrier, cabinet, spe, or board. The tests vary according to the configuration of the system and the specified command options.

This command runs a series of tests on all the hardware on the entire system, an individual carrier, cabinet, spe, or board. The tests vary depending on options chosen and board types. Each test exercises diagnostics on all the hardware in the specified hardware group and reports results of the test along with any possible error codes. Concurrent testing is done to enhance performance, therefore, test results display on the SAT in the order they are received. Consequently, test results of one maintenance object may be intermixed with test results of other maintenance objects.

Because the tests for this command are not destructive, the tests performed on a particular maintenance object with either the ***short*** or the long ***option*** may not be the same as the corresponding demand tests.

A hardware-group command executing in the foreground may be cancelled by either pressing the CANCEL key or by entering the **cancel hardware-group** command at a different SAT. However, if the technician wants to cancel a **test hardware-group** command running in the background, the **cancel hardware-group** command can be entered on any SAT. A canceled **test hardware-group** command can be resumed at the point it left off by entering the **resume hardware-group** command. Restarts are not allowed for **test hardware-group** commands entered with either the ***all-ports*** option or the ***spe-interchange*** option.

Action/ Object	Qualifier	Qualifier Description	Logins	Defaults	Feature Interactions
test hardware-group	system	System-wide test of all hardware-groups	init inads	Test sequence = short; repeat = 1	See below
	carrier location	Carrier address: cabinet (1-3), carrier (A-E)[1]			
	cabinet location	Cabinet address (1-3)[2]			
	board location	Board address in PCSS format[3]			
	print	Output sent to printer			
	schedule	Command validated and then a scheduling form displays to schedule execution of the command. The command is then placed in the command queue and is executed at the specified time. The information displayed by the command is sent to the system printer instead of the screen.[4]			
		Examples: **test hardware-group system** **test hardware-group system print** **test hardware-group carrier 1a** **test hardware-group carrier 1a schedule** **test hardware-group cabinet 2** **test hardware-group board 01c07** **test hardware-group board 01c07 schedule** **test hardware-group spe** **test hardware-group spe print** **test hardware-group spe schedule**			

1 The type of carrier may be port, or processor. In the case of a port carrier, all universal port and tone-clock boards (see reference 4) and its affiliated MOs residing in the specified carrier are tested. For a processor carrier, all SPE complex and tone-clock boards and its affiliated MOs are tested.

2 All PN and PNC related MOs plus cabinet specific MOs, including maintenance boards and environment (ring generator, battery, power, emergency transfer, external alarms, fans, and temperature) are tested if they reside in the specified cabinet location'.

3 All MOs on the specified 'board location' including ports are tested.

4 Refer to the Report Scheduler and System Printer feature specification for more details.

Feature Interactions

test hardware-group	Only one **test hardware-group** command can be active at any given time.
TTI	If the **test hardware-group** command is issued with the ***all-ports*** option when the TTI background task is active, some unadministered ports may not be tested. In addition, active alarms on line ports may be cleared by this task. The **status tti** command can be used to determine the state of the TTI background task.
Add Station	If a **add station** command is entered for an untranslated port at the same time as it is being tested as part of the **test hardware-group** command with the ***all-ports*** option, the error message, `Object in use; please try later` displays, and the request fails.
Trunk administration	If an attempt is made to add an unadministered trunk port to a trunk group at the same time as it is being tested as part of the **test hardware-group** with the ***all-ports*** option, the error message, `Object in use; please try later` displays, and the request fails.
Save translation	If the **test hardware-group** with the ***all-ports*** option while a **translation save** operation is active, some unadministered ports may not be tested. All other hardware are tested normally.
Hardware alarms	When a hardware error is detected by the **test hardware-group** command, the hardware goes through the standard escalation strategy. Alarms are raised on hardware that manifest 'hard' errors. This alarming strategy is the same, regardless of whether the ports are translated or not.
System interaction	The performance of **test hardware-group** is affected by call processing traffic, administration activity, choice of the ***short*** or ***long*** option, whether the ***all-ports*** option is chosen, whether the ***spe-interchange*** option is chosen, and other demand maintenance activity.
Scheduled and periodic maintenance	While executing the **test hardware-group** command, all scheduled background maintenance, periodic background maintenance, and data audits activity is suspended until the command completes. When the **test hardware-group** command is canceled or completes, all suspended periodic, scheduled, and data audits background maintenance activity are restarted where it left off.

Setting the Test Parameters

Once the user has entered the desired action (**test hardware-group**) and the object (board, carrier, etc.), then an options form displays.

```
test hardware-group system                          Page 1 of 1


            TEST HARDWARE-GROUP SELECTIONS

      Select the desired options for the specified test.
            Test sequence: short
          Test repetition: repeat        count: 1


        Output OPTIONS:                HARDWARE OPTIONS:
         Auto-page? n                 All-ports? n
        Background? n          SPE-interchange? n
          Failures? n
```

Field descriptions

`Test sequence`

Short (nondestructive) or ***long*** (more comprehensive, still nondestructive) test sequence

`Test Repetition`

repeat - (1-99) each test is executed the number of times specified on each physical object.

continuously -all tests on all the specified hardware run until cancelled by either pressing the CANCEL key or by executing the **cancel hardware-group** command.

`count:`

Repeat test sequence value (1-99). If the `Test sequence` field is set to **continuously**, then this field disappears from the screen; if this field is set to **repeat**, then the field appears.

`Auto-page?`

Provides a new screen every time the SAT screen fills with test results. (***n*** / ***y***). The screen does not scroll to accommodate new results; instead a new screen is provided after the current screen fills up.

If the ***auto-page*** option is not selected, the SAT screen does not refresh once it is filled, and testing stops until the user enters the PAGE key to continue or the CANCEL key to cancel the testing.

This option is not allowed if the ***background*** option is selected.

`Background?` Run the command in the background, thus freeing the SAT (***n*** / ***y***). The error results are tabulated in the error log, but no results display on the terminal.

This option cannot be used if either the ***continuously*** or the ***auto-page*** options are selected.

`Failures?` Only failing test results display (***n*** / ***y***). Test results that pass or abort are not displayed. The ***failures*** option has no effect if entered with the ***background*** option.

`All-ports?` Tests all customer translated line and trunk ports as well as a set of untranslated line and trunk ports for boards listed in Table 8-16 (***n*** / ***y***).

Table 8-16. Test of 'all ports' option for the following boards:

Board Number	Description	Board Number	Description
TN413	Digital Line	TN746	16 port Analog Line
TN417	Auxiliary Trunk	TN747B	Central Office Trunk
TN429	Direct Inward/ Outward Dialing Trunk	TN753	Direct-Inward-Dial Trunk
TN436	Direct Inward Dialing Trunk	TN754	Digital Line
TN437	Tie Trunk	TN760C	Tie Trunk
TN438	Central Office Trunk	TN762B	Hybrid Line
TN439	Tie Trunk	TN763C	Auxiliary Trunk
TN447	Central Office Trunk	TN767	DS1 Interface
TN458	Tie Trunk	TN769	Analog Line with Message Waiting
TN459	Direct Inward Dialing Trunk	TN784	Digital Line
TN464C	Universal DS1	TN785	16 port Analog Line
TN465	Central Office Trunk	TN2135	Italian 16 Port Analog Line
TN467	8 port Analog line	TN2136	Digital Line
TN468	16 port Analog line	TN2138	International Central Office Trunk
TN479	16 port Analog line	TN2139	Direct Inward Dialing Trunk
TN497	Tie Trunk	TN2140	Tie Trunk
TN556	ISDNBRI Line	TN2144	Analog Line

Continued on next page

Table 8-16. Test of 'all ports' option for the following boards: — *Continued*

Board Number	Description	Board Number	Description
TN722B	DS1 Tie Trunk	TN2146	Direct Inward Dialing Trunk
TN726B	Data Line	TN2147	Central Office Trunk
TN742	8 port Analog Line	TN2149	Analog Line
		TN2180	16 port Analog line

`SPE-interchange?` Allow for planned interchange of duplicated SPEs and subsequent testing of both the active and standby SPEs.

Output

The following example shows the output for the **test hardware-group system** command and assumes that the board in port network 1, carrier c, slot 7 is an analog board with three administered ports and test sequence repeat = 3. Responses to this command running in the foreground display on a test-by-test basis with one line of data for each test result.

```
test hardware-group system


                                TEST RESULTS

  Port      Maintenance Name  Alt. Name Test No. Result       Error Code
  01C07     ANL-BD                      51       PASS
  01C07     ANL-BD                      52       PASS
  01C0703   ANL-LINE                    35       PASS
  01C0702   ANL-LINE                    35       PASS
  01C0703   ANL-LINE                    48       PASS
  01C0701   ANL-LINE                    35       PASS
  01C0702   ANL-LINE                    48       PASS
  01C0703   ANL-LINE                    36       PASS
  01C0702   ANL-LINE                    36       PASS
  01C0701   ANL-LINE                    48       PASS
  01C0701   ANL-LINE                    36       PASS

Testing system, 11070 of 12300 (90%) MOs tested for repetition 1
```

Field descriptions

`Port`	Port address (cabinet-carrier-slot-circuit)
`Maintenance Name`	The name of maintenance object
`Alt. Name`	Alternate way to identify maintenance objects.

If the Object is	The field contains
station	extension
trunk	*xxx/yyy* (*xxx* = trunk group, *yyy* = member)
private CO line	*P/xxx* (*xxx* = private CO line group number)

`Test No.`	The test being executed
`Result`	Test result: No Board, Extra Bd, Disabled, or Skipped
`Error Code`	Numeric code explaining why the release failed or aborted. Refer to the detailed list of the codes by test number for each MO.

The following example shows the output for the ***test hardware-group system*** with the ***background*** option selected.

```
test hardware-group system

Command started in background mode
```

test inads-link

This command attempts to make a call over the inads port on the maintenance board to verify the INADS alarm notification process. In the default settings, the system test the link to the first OSS telephone number. If there is an alarm pending to be reported or the call is in progress or up, then the test aborts. If the alarm origination to the OSS telephone number to be tested is disabled, then the test generates an informative error and the test continues. The test waits 2 minutes before dialing the call to allow the remote maintenance technician to logoff, thus freeing the line. A *local* SAT user entering the **test inads-link** command does not need to log off for the system to place the call, but the two-minute delay still exists.

Once the call is answered by INADS, the system sends a message with a test alarm type. INADS acknowledges receipt of the message and creates a trouble ticket. The trouble ticket is closed immediately and has a “INADS LINK TEST” message entered in the description field. If an alarm is raised while the test call is up, the system does not send an alarm message over the existing link. The normal retry mechanism is followed, which means an attempt to make a call to INADS to report the error takes place 7 minutes later. An INADS trouble ticket is created only if the connection is successfully established and a message is sent to the system acknowledging that INADS received the system message.

The `Maintain Process Circuit Packs` field must be set to **yes** on the inads and technician permission forms. This provides permissions to execute the **test inads-link** command. This field can be changed by executing a **change permission login** command.

No alarms are raised on the system and attendant alarm and acknowledgment lamp states are not changed as a result of the **test inads-link** command. The test does not run during periodic or scheduled maintenance.

Action/Object	Qualifier	Qualifier Description	Logins	Defaults	Feature Interactions
test inads-link	1 2	First OSS telephone number Second OSS telephone number Examples: **test inads-link** **test inads-link 1** **test inads-link 2**	init inads craft nms	1st OSS number	none

Output

Command successfully completed	Test passed
Command failed	Link was up, there was an active alarm that the switch needs to report, or there was a problem with the call.

NOTE:
An entry is made in the error log describing why the inads-link test failed.

test interface

This command performs hardware diagnostic tests on the specified processor interface circuit pack. In addition to testing the PI board, the tests examine the protocol and link interface that is transmitted over the board.

Action/Object	Qualifier	Qualifier Description	Logins	Defaults	Feature Interactions
test interface	location	Location (cabinet-carrier-position) of the processor interface (position 1 = first processor interface in the carrier, 2 = second)	init inads craft nms	Test sequence = short; repeat = 1	none
	short	Option for a brief series of nondestructive diagnostic tests.			
	long	Option for a longer, more comprehensive series of both destructive and nondestructive diagnostic tests.			
	repeat number	Number of times each test in the sequence is repeated (1-100)			
	clear	This option causes the test sequence (short or long) to repeat until the alarm (if any) is cleared or a single test in the sequence fails.[1]			
	schedule	Command is validated and then a scheduling form displays to schedule execution of the command. The command is then placed in the command queue and is executed at the specified time. The information displayed by the command is sent to the system printer instead of the screen.[2] Examples: **test interface 01a1 l** **test interface 01b2 s r 2** **test interface 01b2 s r 2 schedule** **test interface b1 l r 25** **test interface a2**			

1 If no alarms are registered against the maintenance object then the test sequence is run only once. The ***long clear*** option forces a clear of all alarms if no errors are encountered during testing. The ***short clear*** option only clears alarms pertinent to tests in the short sequence. SEE WARNING BELOW.

2 Refer to the Report Scheduler and System Printer feature specification for more details.

WARNING:
Since the "clear long" options clear all counters if tests pass, it is possible for firmware counters to be cleared even when a problem exists. In some cases customer service might degrade since calls may be routed over defective equipment.

Output

The following example shows the output for the **test interface a1** command. The responses display on a test-by-test basis with one line of data for each test result.

```
test interface a1


                              TEST RESULTS

  Port    Maintenance Name  Alt. Name Test No. Result      Error Code
  01A1    PI-SCI                      231      PASS
  01A1    PI-BD                       52       PASS


Command Successfully Completed
```

Field descriptions

Port	Port address: cabinet-carrier-slot (the carrier associated with the particular processor interface board)
Maintenance Name	The name of maintenance object
Alt. Name	Blank.
Test No	The test being executed
Result	Test result: Pass, Abort, Fail, No Board, Disabled, or Extra Bd.
Error Code	Numeric code explaining why the release failed or aborted. Refer to the detailed list of codes by test number for each MO.

test isdn-testcall

This command starts an outgoing, asynchronous ISDN-PRI test call in the asynchronous method from a specified trunk. If the test results are PASS, the test call is started. A test result of ABORT means that a resource wasn't available, for example, B-channel or a Maintenance/Test circuit pack. A test result of FAIL denotes that the outgoing ISDN-PRI test call was not established.

Action/Object	Qualifier	Qualifier Description	Logins	Defaults	Feature Interactions
test isdn-testcall	group number	The administered group number associated with each trunk group	init inads craft	duration = 8.4 or 9.6 sec	See below
	member number	The administered member number identifying a particular trunk within a trunk group.			
	minute number	Duration of the test call in minutes (1-120)			
	schedule	Command is validated and then a scheduling form displays to schedule execution of the command. The command is then placed in the command queue and is executed at the specified time. The information displayed by the command is sent to the system printer instead of the screen.[1] Examples: **test isdn-testcall 80/1** **test isdn-testcall 80/1 schedule** **test isdn-testcall 78/2 minutes 10** **test isdn-testcall 78/3 minutes 100 schedule**			

1 Refer to the Report Scheduler and System Printer feature specification for more details.

Feature Interactions

- Use the **status isdn-testcall** command for details on how to access the additional data available after running the test.
- Only one ISDN trunk can be tested per port network at a time. Once testing is completed, another ISDN trunk can be tested in that port network.
- The maximum number of asynchronous outgoing test calls running depends upon the number of Maintenance/Test circuit packs in the system.

Output

The following example shows the output for the test **isdn-testcall 80/1** command. The responses display on a test-by-test basis with one line of data for each test result.

```
test isdn-testcall 77/1                              SPE A


                        TEST RESULTS

  Port      Maintenance Name  Alt. Name Test No. Result       Error Code
  01B1501   ISDN-TRK          077/001   258      PASS


Command Successfully Completed
```

Field descriptions

`Port`	Port address: cabinet-carrier-slot-circuit
`Maintenance Name`	The name of the maintenance object being tested.
`Alt. Name`	Alternate means of identifying the maintenance object. `xxx/yyy`, where `xxx` = trunk group, `yyy` = member number
`Test No`	The test being executed
`Result`	Test result: Pass, Abort, Fail, No Board, Disabled, or Extra Bd.
`Error Code`	Numeric code explaining why the release failed or aborted. Refer to the detailed list of codes by test number for each MO.

test journal-printer

This command performs hardware diagnostics on the link between the switch and one of the specified journal printer links. There are two types of journal printer links: pms-log and wakeup-log. For general information on journal printer links, see the second paragraph in the “Description” section of the “busyout pms-link” manual pages. For information on what a journal printer is and does, see the second paragraph in the ‘‘Output’’ section of the ‘‘status journal-link’’ manual pages.

Action/Object	Qualifier	Qualifier Description	Logins	Defaults	Feature Interactions
test journal-printer	pms-log	Tests the link to the pms logging printer (maintenance name = PMS-PRNT)	init inads craft	Test sequence = short; repeat = 1	See below
	wakeup-log	Tests the link to the wakeup logging printer (maintenance name = JNL-PRNT)			
	short	Option for a brief series of nondestructive diagnostic tests.			
	long	Option for a longer, more comprehensive series of both destructive and nondestructive diagnostic tests.			
	repeat number	Number of times each test in the sequence is repeated (1-100)			
	clear	This option causes the test sequence (short or long) to repeat until the alarm (if any) is cleared or a single test in the sequence fails.[1]			
	schedule	Command is validated and then a scheduling form displays to schedule execution of the command. The command is then placed in the command queue and is executed at the specified time. The information displayed by the command is sent to the system printer instead of the screen.[2] Examples: **test journal-printer pms-log l** **test journal-printer pms-log l schedule** **test journal-printer wakeup-log r 2** **test journal-printer wakeup-log r 2 schedule** **test journ pm r 3** **test journ pm r 3 schedule**			

1 If no alarms are registered against the maintenance object then the test sequence is run only once. The ***long clear*** option forces a clear of all alarms if no errors are encountered during testing. The ***short clear*** option only clears alarms pertinent to tests in the short sequence.

2 Refer to the Report Scheduler and System Printer feature specification for more details.

Feature Interactions

The maintenance of a particular component on a link sometimes interferes with the maintenance of the link itself. Maintenance can put a link component in a busy state causing link set-up to fail. Frequent attempts at re-setup of a link may delay the recovery of a faulty component due to the maintenance test of a component only taking place when the component is idle. Therefore, the technician needs to be able to disable the attempted re-setup of a link. Use of the busyout command causes the link to be torn down. If the link is already down, the busyout command stops periodic re-setup trys on the link.

Output

The following example shows the output for the **test journal-printer pms-log** command. The responses display on a test-by-test basis with one line of data for each test result.

```
test journal-printer pms-log short


                              TEST RESULTS

  Port    Maintenance Name  Alt. Name Test No. Result       Error Code
          JRNL-LINK                   215      PASS


Command Successfully Completed
```

Field descriptions

Port	Not applicable (always blank)
Maintenance Name	The name of maintenance object being tested: PMS-PRINT for testing the pms-log printer link JNL-PRNT for testing the wakeup-log printer link
Alt. Name	Not applicable (always blank)
Test No	The test being executed
Result	Test result: Pass, Abort, Fail, Disabled
Error Code	Numeric code explaining why the release failed or aborted. Refer to the detailed list of codes by test number for each MO.

test led

This command performs a test on all the LEDs in a specified cabinet. Once the cabinet is validated and the range of circuit packs determined, the **test led** command turns on all LEDs on the circuit packs contained in each carrier until all affected carriers are lit. Once all the LEDs are on, there is a 2-second pause, and then all the LEDs are turned off in the same order. Once all of the repeat cycles are completed, all affected LEDs are restored to the current status.

On a duplex PPN, only the long option tests the leds in the standby SPE. When executing the **test led long** command, the standby Processor, Memory, and Packet Control circuit pack LEDs can take up to 20 seconds to light.

The following LEDs are NOT lighted by the **test led** command:

- SPE Select LEDs on the Duplication Interface Circuit Packs
- Power Unit LEDs
- Yellow (amber) LED on the tape drive

Action/ Object	Qualifier	Qualifier Description	Logins	Defaults	Feature Interactions
test led	all	All LEDs in all carriers are tested	init inads craft	all; repeat = 1; test sequence = short in a duplex system	none
	cabinet number	Cabinet number (each carrier tested sequentially)			
	short	Simplex: short and long option are identical and turn on and off all leds in the specified port network. Duplex: short option does *not* affect the leds in the standby SPE carrier in the PPN.			
	long	Simplex: short and long option are identical and turn on and off all leds in the specified port network. Duplex: long option *does* affects the leds in the standby SPE carrier in the PPN.			
	repeat number	Number of times each test in the sequence is repeated (1-100) Examples: **test led** **test led all r 2** **test led cabinet 1** **test led c 1** **test led 1 long**			

Output

If the command is successful, `Command successfully completed` displays.

test link

This command validates that a specified link is administered and then performs a set of hardware diagnostic tests on the link.

Action/ Object	Qualifier	Qualifier Description	Logins	Defaults	Feature Interactions
test link	link-id	Link number (1-8; assigned via the communication-interface links form)	init inads craft	Test sequence = short; repeat = 1	none
	short	Option for a brief series of nondestructive diagnostic tests.			
	long	Option for a longer, more comprehensive series of both destructive and nondestructive diagnostic tests.			
	repeat number	Number of times each test in the sequence is repeated (1-100)			
	clear	This option causes the test sequence (short or long) to repeat until the alarm (if any) is cleared or a single test in the sequence fails.[1]			
	schedule	Command is validated and then a scheduling form displays to schedule execution of the command. The command is then placed in the command queue and is executed at the specified time. The information displayed by the command is sent to the system printer instead of the screen.[2] Examples: **test link 1** **test link 1 schedule** **test link 3 l** **test link 2 sh** **test link 2 r 2** **test link 2 l c**			

1 If no alarms are registered against the maintenance object then the test sequence is run only once. The ***long clear*** option forces a clear of all alarms if no errors are encountered during testing. The ***short clear*** option only clears alarms pertinent to tests in the short sequence.

2 Refer to the Report Scheduler and System Printer feature specification for more details.

WARNING:
Since the “clear long” options clear all counters if tests pass, it is possible for firmware counters to be cleared even when a problem exists. In some cases customer service might degrade since calls may be routed over defective equipment.

Output

The following example shows the output for the test link 1 long command. The responses display on a test-by-test basis with one line of data for each test result.

```
test link 1 long


                              TEST RESULTS

  Port      Maintenance Name  Alt. Name Test No. Result       Error Code
  01AXX01   PI-LINK                     182      PASS
  01AXX01   PI-LINK                     183      PASS
  01AXX01   PI-LINK                     234      PASS
  01AXX01   PI-LINK                     233      PASS


Command Successfully Completed
```

Field descriptions

Port	Port address on the Processor Interface board associated with the link-id being tested.
Maintenance Name	The name of maintenance object being tested
Alt. Name	Not applicable.
Test No	The test being executed
Result	Test result: Pass, Abort, Fail, No Board, Disabled, Extra Bd.
Error Code	Numeric code explaining why the release failed or aborted. Refer to the detailed list of codes by test number for each MO.

test maintenance

This command tests the EPN maintenance circuit pack in any Expansion Port Network control carrier. Specifying cabinets 2 - 3 allows testing of any connected EPN maintenance circuit packs. The test sequence checks the SAT interface, EI link, reset, and sanity functions on the EPN maintenance circuit pack. The long test resets the EPN maintenance circuit pack, causing the EPNSAT link to be dropped and is destructive.

Action/Object	Qualifier	Qualifier Description	Logins	Defaults	Feature Interactions
test maintenance	location	Physical location of the maintenance circuit pack: (2-3)	init inads craft	Test sequence = short; repeat = 1	See below
	short	Option for a brief series of nondestructive diagnostic tests.			
	long	Option for a longer, more comprehensive series of both destructive and nondestructive diagnostic tests.			
	repeat number	Number of times each test in the sequence is repeated (1-100)			
	clear	This option causes the test sequence (short or long) to repeat until the alarm (if any) is cleared or a single test in the sequence fails.[1]			
	schedule	Command is validated and then a scheduling form displays to schedule execution of the command. The command is then placed in the command queue and is executed at the specified time. The information displayed by the command is sent to the system printer instead of the screen.[2] Examples: **test maintenance 2** **test maintenance 3 schedule** **test maintenance 2 sh** **test maintenance 2 l c**			

1 If no alarms are registered against the maintenance object then the test sequence is run only once. The ***long clear*** option forces a clear of all alarms if no errors are encountered during testing. The ***short clear*** option only clears alarms pertinent to tests in the short sequence.

2 Refer to the Report Scheduler and System Printer feature specification for more details.

Feature Interactions

The last test in the long test sequence on EPN maintenance circuit packs drops the EPNSAT link.

Output

The following example shows the output for the **test maintenance 2** command. The responses display on a test-by-test basis with one line of data for each test result.

```
test maintenance 2


                              TEST RESULTS

  Port    Maintenance Name  Alt. Name Test No. Result       Error Code
  02A     MAINT                       106      PASS
  02A     MAINT                       229      PASS
  02A     MAINT                       303      PASS
  02A     MAINT                       337      PASS


Command Successfully Completed
```

Field descriptions

Port	The port address (cabinet-carrier) of the maintenance object that is being tested. For this maintenance object, only the cabinet and carrier values display.
Maintenance Name	The maintenance name (always MAINT)
Alt. Name	Not applicable.
Test No.	The test being executed
Result	The result of the individual test: Pass, Abort, Fail, Disabled
Error Code	Numeric code explaining why the release failed or aborted. Refer to the detailed list of codes by test number for each MO.

test memory

This command performs hardware diagnostic tests on any or all memory circuit packs in the specified carrier. Both short and the long test are nondestructive when testing memory.

Action/Object	Qualifier	Qualifier Description	Logins	Defaults	Feature Interactions
test memory	location	Physical location of the memory circuit pack: cabinet number (optional, but always 1 if entered) and carrier letter (either **a** or **b** for duplex, **a** for simplex)	init inads craft nms	See below	none
	short	Option for a brief series of nondestructive diagnostic tests.			
	long	Option for a longer, more comprehensive test series (all nondestructive for this command).			
	repeat number	Number of times each test in the sequence is repeated (1-100)			
	clear	This option causes the test sequence (short or long) to repeat until the alarm (if any) is cleared or a single test in the sequence fails.[1]			
	schedule	Command is validated and then a scheduling form displays to schedule execution of the command. The command is then placed in the command queue and is executed at the specified time. The information displayed by the command is sent to the system printer instead of the screen.[2] Examples: **test memory** **test memory a** **test memory a schedule** **test memory 1a2** **test memory b1 sh** **test memory b l r 25** **test memory a l c**			

1 If no alarms are registered against the maintenance object then the test sequence is run only once. The ***long clear*** option forces a clear of all alarms if no errors are encountered during testing. The ***short clear*** option only clears alarms pertinent to tests in the short sequence.

2 Refer to the Report Scheduler and System Printer feature specification for more details.

Defaults

The cabinet default is always 1. For SPE simplex systems, the default carrier is the “a” carrier; for SPE duplex systems, there is no default carrier. The defaults for the remaining parameters are short with a repeat of 1.

Output

The following example show the output for the **test memory 1b** command. The responses display on a test-by-test basis with one line of data for each test result.

```
test memory 1b


                          TEST RESULTS

  Port    Maintenance Name  Alt. Name Test No. Result       Error Code
  01B     MEM-BD                      87       PASS
  01B     MEM-BD                      631      PASS


Command Successfully Completed
```

Field descriptions

Port	The port address (cabinet-carrier)
Maintenance Name	The name of maintenance object being tested is MEMORY.
Alt. Name	Not applicable.
Test No.	The test being executed
Result	The result of the test: Pass, Abort, or Fail
Error Code	Numeric code explaining why the release failed or aborted. Refer to the detailed list of codes by test number for each MO.

test modem-pool

This command performs hardware diagnostic tests on the specified modem pool group or an individual member of a specified group (Combined or Integrated). A Combined modem-pool group consists of pairs of Analog and Digital Line ports. One pair of Analog and Digital Line ports used for modem-pooling is called a conversion resource. An Integrated group consists of modem-pool circuit packs, each containing two conversion resources. Therefore, when a member number is specified for a Combined modem-pool group, one conversion resource is tested, and when a member number is specified for an Integrated modem-pool group, two conversion resources are tested.

Action/Object	Qualifier	Qualifier Description	Logins	Defaults	Feature Interactions
test modem-pool	group number	The administered group number (1-5)	init inads craft	Test Sequence = short; repeat = 1	none
	member number	The administered member number (1-32). A member is a pair of analog and digital line ports (two pair for the Integrated modem-pool).			
	short	Option for a brief series of nondestructive diagnostic tests.			
	long	Option for a longer, more comprehensive series of both destructive and nondestructive diagnostic tests.			
	repeat number	Number of times each test in the sequence is repeated (1-100)			
	clear	This option causes the test sequence (short or long) to repeat until the alarm (if any) is cleared or a single test in the sequence fails.[1]			
	schedule	Command is validated and then a scheduling form displays to schedule execution of the command. The command is then placed in the command queue and is executed at the specified time. The information displayed by the command is sent to the system printer instead of the screen.[2]			
		Examples: **test modem-pool 1** **test modem-pool 1 schedule** **test modem-pool 1/3 l r 2** **test modem-pool 1/3 l r 2 schedule** **test modem-pool 2 r 2** **test modem-pool 2 l**			

1 If no alarms are registered against the maintenance object then the test sequence is run only once. The ***long clear*** option forces a clear of all alarms if no errors are encountered during testing. The ***short clear*** option only clears alarms pertinent to tests in the short sequence. SEE WARNING BELOW

2 Refer to the Report Scheduler and System Printer feature specification for more details.

Output

The following example shows the output for **test modem-pool 1/3**. The responses display on a test-by-test basis with one line of data for each test result.

```
test modem-pool 1/3 short                          SPE B


                              TEST RESULTS

  Port      Maintenance Name  Alt. Name Test No. Result       Error Code
  01C0701   MODEM-PT                    98       PASS
  01C0701   MODEM-PT                    99       PASS


Command Successfully Completed
```

Field descriptions

Port	Port address (cabinet-carrier-slot-circuit)
Maintenance Name	The name of maintenance object (always MODEM-PT)
Alt. Name	Not applicable
Test No	The test being executed
Result	Test result: Pass, Abort, Fail, No Board, Disabled, Extra Bd.
Error Code	Numeric code explaining why the release failed or aborted. Refer to the list of codes by test number for each MO.

test network-control

This command performs hardware diagnostic tests on a specified network control circuit pack.

Action/ Object	Qualifier	Qualifier Description	Logins	Defaults	Feature Interactions
test network-control	location	Network control board carrier location in a High or Critical Reliability System (a or b).	init inads craft	Cabinet 1, carrier a, test sequence repeat = 1.	none
	short	Option for a brief series of nondestructive diagnostic tests.			
	long	Option for a longer, more comprehensive series of both destructive and nondestructive diagnostic tests.			
	repeat number	Number of times each test in the sequence is repeated (1-100)			
	clear	This option causes the test sequence (short or long) to repeat until the alarm (if any) is cleared or a single test in the sequence fails.[1]			
	schedule	Command is validated and then a scheduling form displays to schedule execution of the command. The command is then placed in the command queue and is executed at the specified time. The information displayed by the command is sent to the system printer instead of the screen.[2] Examples: **test network-control** **test network-control a l** **test network-control b sh r 2** **test network-control b l r 25** **test network-control a** **test network-control a c**			

1 If no alarms are registered against the maintenance object then the test sequence is run only once. The ***long clear*** option forces a clear of all alarms if no errors are encountered during testing. The ***short clear*** option only clears alarms pertinent to tests in the short sequence. SEE WARNING BELOW

2 Refer to the Report Scheduler and System Printer feature specification for more details.

WARNING:
Since the “clear long” options clear all counters if tests pass, it is possible for firmware counters to be cleared even when a problem exists. In some cases customer service might degrade since calls may be routed over defective equipment.

Output

The following example shows the output from **test network-control a**. The responses display on a test-by-test basis with one line of data for each test result.

```
test network-control a


                              TEST RESULTS

  Port      Maintenance Name  Alt. Name Test No. Result      Error Code
  01A       DATA-BD                     52       PASS
  01AXX01   DATA-CHL          4001      109      PASS
  01AXX01   DATA-CHL          4001      110      PASS
  01AXX01   DATA-CHL          4001      111      PASS
  01A       SW-CTL                      95       PASS
  01A       SW-CTL                      92       PASS
  01A       SW-CTL                      94       PASS
  01A       SW-CTL                      324      PASS
  01A       CARD-MEM                    695      PASS
  01A       CARD-MEM                    696      PASS
  01A       CARD-MEM                    697      PASS
  01A       CARD-MEM                    698      PASS
  01A       CARD-MEM                    699      PASS


Command Successfully Completed
```

Field descriptions

`Port` Port address: cabinet (always 1)-carrier-slot-circuit. For the DATA-BD, SW-CTL, and CARD-MEM maintenance objects, the `slot` and `circuit` fields of port address are blank. DATA-CHL (administered data channel) uses `XX` as the slot address and has a circuit number between 01 and 04. The carrier field has a value `A` for the control carrier A in a simplex system, and `A` or `B` for control carriers A and B in a duplex system.

`Maintenance Name` The name of the maintenance object:

- DATA-BD for Network Control board
- SW-CTL for Switch Control Archangel
- DATA-CHL for administered data channel
- CARD-MEM for flash memory card on Network Control board

`Alt. Name` Extension number of the DATA-CHL, if administered. Otherwise, blank.

`Test No` The test being executed.

`Result` Test result: Pass, Abort, Fail, No Board, Disabled, Extra Bd.

`Error Code` Numeric code explaining why the release failed or aborted. Refer to the detailed list of codes by test number for each MO.

test packet-control

This command performs hardware diagnostic tests on the specified packet-control circuit pack.

Action/ Object	Qualifier	Qualifier Description	Logins	Defaults	Feature Interactions
test packet-control	***location***	Applies only to duplicated configurations: if simplex, parameter is not used and thus is not valid; if duplicated, "location" represents the carrier in which the packet-control resides (1A or 1B).	init inads craft nms	Simplex: location optional, cabinet=1, carrier A. Duplex: cabinet=1, no default for the carrier.	See below
	short	Option for a brief series of nondestructive diagnostic tests.			
	long	Option for a longer, more comprehensive series of both destructive and nondestructive diagnostic tests.			
	repeat number	How many times each test in the sequence is repeated (1-100)			
	clear	This option causes the test sequence (short or long) to repeat until the alarm (if any) is cleared or a single test in the sequence fails.[1]			
	schedule	Command is validated and then a scheduling form displays to schedule execution of the command. The command is then placed in the command queue and is executed at the specified time. The information displayed by the command is sent to the system printer instead of the screen.[2] Examples: **test packet-control** **test packet-control A** **test packet-control B** **test packet-control 1A** **test packet-control 1B** **test packet-control a short** **test packet-control a s repeat 5** **test packet-control b s r 5** **test packet-control b long clear** **test packet-control b l r 25**			

1 If no alarms are registered against the maintenance object then the test sequence is run only once. The ***long clear*** option forces a clear of all alarms if no errors are encountered during testing. The ***short clear*** option only clears alarms pertinent to tests in the short sequence.

2 Refer to the Report Scheduler and System Printer feature specification for more details.

Feature Interactions

The reset packet-control test (#586) does not run on the active packet-control. This test is part of the standby packet-control test sequence, illustrated in the screen output section below.

Output

The following example is the screen output for the **test packet-control 1B long** command. Note that carrier B is the active carrier in this example.

```
test packet-control 1B l


                              TEST RESULTS

 Port    Maintenance Name  Alt. Name Test No.  Result      Error Code

 01B     PKT-CTRL                     583      PASS
 01B     PKT-CTRL                     584      PASS
 01B     PKT-CTRL                     585      PASS


Command successfully completed
```

Field descriptions

Port	Port address (cabinet-carrier-slot-circuit)
Maintenance Name	The name of maintenance object.
Alt. Name	Not applicable
Test No.	The test number run on the packet-control.
Result	Test result: Pass, Abort, Fail, No Board, Disabled, Extra Bd.
Error Code	Numeric code explaining why the release failed or aborted. Refer to the detailed list of codes by test number for each MO.

test pkt

The test pkt runs a series of tests on the Packet bus of the specified PPN or EPN.

Action/Object	Qualifier	Qualifier Description	Logins	Defaults	Feature Interactions
test pkt port-network	pn number	The Packet bus to be tested: *nn* (1-3)	init inads craft	Test Sequence = short; Repeat = 1	none
	short	Option for a brief series of nondestructive diagnostic tests.			
	long	Option for a longer, more comprehensive series of both destructive and nondestructive diagnostic tests.			
	repeat number	How many times each test in the sequence is repeated (1-100)			
	clear	This option causes the test sequence (short or long) to repeat until the alarm (if any) is cleared or a single test in the sequence fails.[1]			
	schedule	Command is validated and then a scheduling form displays to schedule execution of the command. The command is then placed in the command queue and is executed at the specified time. The information displayed by the command is sent to the system printer instead of the screen.[2]			
		Examples: **test pkt port-network 1 l** **test pkt port-network 2 sh r 2** **test pkt port-network 2 sh schedule** **test pkt port-network 1 l r 25** **test pkt port-network 2** **test pkt port-network 1 c**			

1 If no alarms are registered against the maintenance object, then the test sequence is run only once. The ***long clear*** option forces a clear of all alarms if no errors are encountered during testing. The ***short clear*** option only clears alarms pertinent to tests in the short sequence. SEE WARNING BELOW.

2 Refer to the Report Scheduler and System Printer feature specification for more details.

WARNING:
*Since the **clear long** options clear all counters if tests pass, it is possible for firmware counters to be cleared even when a problem exists. In some cases customer service might degrade since calls may be routed over defective equipment.*

Output

The following example is the output for the test pkt port-network 1 command. The responses display on a test-by-test basis with one line of data for each test result.

```
test pkt port-network 1


                 TEST RESULTS

  Port    Maintenance Name  Alt. Name Test No. Result       Error Code
  PN 01   PKT-BUS                     571      PASS
  PN 01   PKT-BUS                     572      PASS
  PN 01   PKT-BUS                     573      PASS


Command successfully completed
```

Field descriptions

Port	A port network number (1-3).
Maintenance Name	The name of maintenance object being tested.
Alt. Name	Not applicable.
Test No	The test being executed.
Result	Test result: Pass, Abort, Fail, No Board, Disabled, Extra Bd.
Error Code	Numeric code explaining why the release failed or aborted. Refer to the detailed list of codes by test number for each MO.

test pms-link

This command performs the specified property management system link tests on the specified pms link by checking to see if the link is accessible and then performing a reset on the link (long test only). For general information on PMS links, refer to the description of the ''busyout pms-link'' command. For information on what a PMS is and does, refer to the description of the ''status pms-link'' command.

Action/Object	Qualifier	Qualifier Description	Logins	Defaults	Feature Interactions
test pms-link	short	Option for a brief series of nondestructive diagnostic tests.	init inads craft	Test Sequence = short; Repeat = 1	See below
	long	Option for a longer, more comprehensive series of both destructive and nondestructive diagnostic tests.			
	repeat number	How many times each test in the sequence is repeated (1-100)			
	clear	This option causes the test sequence (short or long) to repeat until the alarm (if any) is cleared or a single test in the sequence fails.[1]			
	schedule	Command is validated and then a scheduling form displays to schedule execution of the command. The command is then placed in the command queue and is executed at the specified time. The information displayed by the command is sent to the system printer instead of the screen.[2] Examples: **test pms-link sh r 5** **test pms-link l** **test pms-link** **test pms-link c** **test pms-link c sch**			

1 If no alarms are registered against the maintenance object then the test sequence is run only once. The ***long clear*** option forces a clear of all alarms if no errors are encountered during testing. The ***short clear*** option only clears alarms pertinent to tests in the short sequence.

2 Refer to the Report Scheduler and System Printer feature specification for more details.

Feature Interactions

The maintenance of a particular component on a link may interfere with the maintenance of the link itself. Maintenance can put a link component in a busy state causing link set-up to fail. Frequent attempts at re-setup of a link may delay the recovery of a faulty component due to the maintenance test of a component only taking place when the component is idle. Therefore, the technician needs to be able to disable the attempted re-setup of a link. The **busyout** command is used to do this and causes the link to be torn down. If the link is already down, the **busyout** command stops periodic re-setup tries on the link.

Output

The following example shows the output for the **test pms-link long** command. The responses display on a test-by-test basis with one line of data for each test result.

```
test pms-link long


                              TEST RESULTS

  Port    Maintenance Name  Alt. Name Test No. Result       Error Code
          PMS-LINK                    214      PASS


Command Successfully Completed
```

Field descriptions

Port	Always blank
Maintenance Name	Always PMS-LINK
Alt. Name	Not applicable.
Test No	The test being executed
Result	Test result: Pass, Abort, Fail, No Board, Disabled, Extra Bd.
Error Code	Numeric code explaining why the release failed or aborted. Refer to the list of codes by test number for each MO.

test port

This command performs hardware diagnostic tests on an individual port circuit. In most cases, tests are performed on hardware connected to the port.

Action/ Object	Qualifier	Qualifier Description	Logins	Defaults	Feature Interactions
test port	location	**PCSSpp**	init inads craft	Test Sequence = short; Repeat = 1	none
	short	Option for a brief series of nondestructive diagnostic tests.			
	long	Option for a longer, more comprehensive series of both destructive and nondestructive diagnostic tests.			
	repeat number	How many times each test in the sequence is repeated (1-100)			
	clear	This option causes the test sequence (short or long) to repeat until the alarm (if any) is cleared or a single test in the sequence fails.[1]			
	schedule	Command is validated and then a scheduling form displays to schedule execution of the command. The command is then placed in the command queue and is executed at the specified time. The information displayed by the command is sent to the system printer instead of the screen.[2] Examples: **test port 01c1101 l** **test port 01c1101 l schedule** **test port 02e1502 sh r 2** **test port 02d1201 r 4** **test port 01c1101 c**			

1 If no alarms are registered against the maintenance object then the test sequence is run only once. The ***long clear*** option forces a clear of all alarms if no errors are encountered during testing. The ***short clear*** option only clears alarms pertinent to tests in the short sequence. SEE WARNING BELOW.

2 Refer to the Report Scheduler and System Printer feature specification for more details.

WARNING:
Since the "clear long" options clear all counters if tests pass, it is possible for firmware counters to be cleared even when a problem exists. In some cases customer service might degrade since calls may be routed over defective equipment.

Output

The following example is the output for the **test port** command and assumes that the port in cabinet 1, carrier c, slot 7, circuit 1 is an analog port. The responses display on a test-by-test basis with one line of data for each test result.

```
test port 01c0701 short


                 TEST RESULTS

  Port      Maintenance Name  Alt. Name Test No. Result       Error Code
  01C0701   ANL-LINE                    35       PASS
  01C0701   ANL-LINE                    48       PASS
  01C0701   ANL-LINE                    36       PASS


Command Successfully Completed
```

Field descriptions

Port	Port address (cabinet-carrier-slot-circuit)
Maintenance Name	The name of maintenance object.
Alt. Name	The alternate means of identifying the maintenance object.

If the Object is a	The field contains
	stationextension trunkxxx/yyy (xxx = trunk group number and yyy = member number) private CO lineP/xxx (xxx = private CO line group number)

Test No	Test being executed.
Result	Test result: Pass, Abort, Fail, No Board, Disabled, Extra Bd.
Error Code	Numeric code explaining why the release failed or aborted. Refer to the list of codes by test number for each MO.

test pri-endpoint

This command performs hardware diagnostic tests on all port circuits (B-channels) that are associated with the PRI endpoint extension.

The test pri-endpoint command performs hardware diagnostic tests on all port circuits (B-channels) that are associated with the specified PRI endpoint.

Action/Object	Qualifier	Qualifier Description	Logins	Defaults	Feature Interactions
test pri-endpoint	***extension***	PRI endpoint extension to be tested (must conform to dial-plan)	init inads craft nms	Test Sequence = short; Repeat = 1	none
	short	Option for a brief series of nondestructive diagnostic tests.			
	long	Option for a longer, more comprehensive series of both destructive and nondestructive diagnostic tests.			
	repeat number	How many times each test in the sequence is repeated (1-100)			
	clear	This option causes the test sequence (short or long) to repeat until the alarm (if any) is cleared or a single test in the sequence fails.[1]			
	schedule	Command is validated and then a scheduling form displays to schedule execution of the command. The command is then placed in the command queue and is executed at the specified time. The information displayed by the command is sent to the system printer instead of the screen.[2] Examples: **test pri-endpoint 25012** **test pri-endpoint 45002 sh** **test pri-endpoint 45892 l** **test pri-endpoint 24389 sh r 4** **test pri-endpoint 34899 l r 6** **test pri-endpoint 34912 l r 5 schedule** **test pri-endpoint 93483 r 2** **test pri-endpoint 10022 c** **test pri-endpoint 92349 schedule**			

1 If no alarms are registered against the maintenance object then the test sequence is run only once. The ***long clear*** option forces a clear of all alarms if no errors are encountered during testing. The ***short clear*** option only clears alarms pertinent to tests in the short sequence.

2 Refer to the Report Scheduler and System Printer feature specification for more details.

Output

The following output example is for the test pri-endpoint 22501 command and assumes that the PRI endpoint ports for extension 22501 are in cabinet 1, carrier B, slot 20, circuits 1 to 3. The responses display on a port-by-port and test-by-test basis with one line of data for each test result.

```
test pri-endpoint 22501 short                    page 1 of 1


                            TEST RESULTS

  Port      Maintenance Name  Alt. Name Test No. Result      Error Code
  01B2001   PE-BCHL           22501     36       PASS
  01B2001   PE-BCHL           22501     255      PASS
  01B2001   PE-BCHL           22501     256      PASS
  01B2001   PE-BCHL           22501     257      PASS
  01B2002   PE-BCHL           22501     36       PASS
  01B2002   PE-BCHL           22501     255      PASS
  01B2002   PE-BCHL           22501     256      PASS
  01B2002   PE-BCHL           22501     257      PASS
  01B2003   PE-BCHL           22501     36       PASS
  01B2003   PE-BCHL           22501     255      PASS
  01B2003   PE-BCHL           22501     256      PASS
  01B2003   PE-BCHL           22501     257      PASS


Command Successfully Completed
```

Field descriptions

Port	The port address (cabinet-carrier-slot-circuit) of the maintenance object that is being tested.
Maintenance Name	The maintenance object name for the PRI endpoint port is PE-BCHL.
Alt. Name	The specified extension number of the PRI endpoint.
Test No	The actual test being executed.
Result	Test result: Pass, Abort, Fail, No Board, Disabled, Extra Bd.
Error Code	Numeric code explaining why the release failed or aborted. Refer to the list of codes by test number for each MO.

test processor

This command performs hardware diagnostic tests on a specified processor circuit pack.

Action/Object	Qualifier	Qualifier Description	Logins	Defaults	Feature Interactions
test processor	location	Cabinet number (optional for simplex) and carrier letter (optional **a** for simplex; **a** or **b** for duplex).	init inads craft	See below	none
	short	Option for a brief series of nondestructive diagnostic tests.			
	long	Option for a longer, more comprehensive series of both destructive and nondestructive diagnostic tests.			
	clear	This option causes the test sequence (short or long) to repeat until the alarm (if any) is cleared or a single test in the sequence fails.[1]			
	schedule	Command is validated and then a scheduling form displays to schedule execution of the command. The command is then placed in the command queue and is executed at the specified time. The information displayed by the command is sent to the system printer instead of the screen.[2] Examples: **test processor** **test processor schedule** **test processor a** **test processor 1a** **test processor b sh** **test processor a l c**			

1 If no alarms are registered against the maintenance object then the test sequence is run only once. The ***long clear*** option forces a clear of all alarms if no errors are encountered during testing. The ***short clear*** option only clears alarms pertinent to tests in the short sequence.

2 Refer to the Report Scheduler and System Printer feature specification for more details.

Defaults

For SPE simplex systems, the location is optional and defaults to cabinet 1, carrier a. For SPE duplex systems, the cabinet default is again cabinet 1, but there is no default for the carrier. Defaults for the remaining parameters are short with a repeat of 1.

Output

The following output example is for the test processor a command. The responses display on a test-by-test basis with one line of data for each test result.

```
test processor a                                SPE B


                          TEST RESULTS

  Port    Maintenance Name  Alt. Name Test No. Result      Error Code
  01A     PROCR                        77      PASS
  01A     PROCR                        80      PASS
  01A     PROCR                        82      PASS
  01A     PR-MAINT                    102      ABORT       1018
  01A     PR-MAINT                    103      ABORT       1018
  01A     PR-MAINT                    106      PASS
  01A     PR-MAINT                    228      PASS
  01A     PR-MAINT                    229      ABORT       1018
  01A     MEMORY                       87      PASS
  01A     MEMORY                      631      PASS


Command successfully completed
```

Field descriptions

Port	The port address (cabinet-carrier) of the maintenance object that is being tested.
Maintenance Name	Maintenance object being tested is MEMORY.
Alt. Name	Not applicable.
Test No.	Test being executed
Result	Test result: Pass, Abort, Fail, No Board, Disabled, Extra Bd.
Error Code	Numeric code explaining why the release failed or aborted. Refer to the list of codes by test number for each MO.

test shadow-link

This command performs hardware diagnostics for the shadow link between the two duplication-interface circuit packs. This command works only with High or Critical Reliability systems. Refer to Chapter 6, ‘‘Reliability Systems: A Maintenance Aid’’ for more details.

Action/ Object	Qualifier	Qualifier Description	Logins	Defaults	Feature Interactions
test shadow-link	***short long***	Both the short and long test sequence execute only Test #318.	init inads craft	Test Sequence = short; Repeat = 1	none
	repeat number	How many times each test in the sequence is repeated (1-100)			
	clear	This option causes the test sequence (short or long) to repeat until the alarm (if any) is cleared or a single test in the sequence fails.[1]			
	schedule	Command is validated and then a scheduling form displays to schedule execution of the command. The command is then placed in the command queue and is executed at the specified time. The information displayed by the command is sent to the system printer instead of the screen.[2] Examples: **test shadow-link l** **test shadow-link sh r 2** **test shadow-link sh r 2 schedule** **test shadow-link c**			

1 If no alarms are registered against the maintenance object then the test sequence is run only once. The ***long clear*** option forces a clear of all alarms if no errors are encountered during testing. The ***short clear*** option only clears alarms pertinent to tests in the short sequence.

2 Refer to the Report Scheduler and System Printer feature specification for more details.

Output

The following output example is for the **test shadow-link** command. The responses display on a test-by-test basis with one line of data for each test result.

```
test shadow-link


                              TEST RESULTS

  Port    Maintenance Name  Alt. Name Test No. Result       Error Code
          SHDW-LNK                    318      PASS


Command Successfully Completed
```

Field descriptions

Port	The port address is always blank.
Maintenance Name	SHDW-LNK
Alt. Name	Not applicable.
Test No	The test number is always 318.
Result	Test result: Pass, Abort, Fail, Disabled
Error Code	Numeric code explaining why the release failed or aborted. Refer to the list of codes by test number for each MO.

test signaling-group

This command validates that the specified signaling group is administered and runs a series of diagnostic tests that return results of the test along with possible error codes. A signaling group is a collection of B-channels signaled for by a designated single D-channel or set of D-channels over an ISDN-PRI.

Action/Object	Qualifier	Qualifier Description	Logins	Defaults	Feature Interactions
test signaling-group	group identifier	The station extension (must conform to dial-plan)	init inads craft	Test Sequence = short; Repeat = 1	See below
	short	Option for a brief series of nondestructive diagnostic tests.			
	long	Option for a longer, more comprehensive series of both destructive and nondestructive diagnostic tests.			
	repeat number	How many times each test in the sequence is repeated (1-100)			
	clear	This option causes the test sequence (short or long) to repeat until the alarm (if any) is cleared or a single test in the sequence fails.[1]			
	schedule	Command is validated and then a scheduling form displays to schedule execution of the command. The command is then placed in the command queue and is executed at the specified time. The information displayed by the command is sent to the system printer instead of the screen.[2] Examples: **test signaling-group 1** **test signaling-group 1 repeat 10** **test signaling-group 2 short** **test signaling-group 4 long** **test signaling-group 4 long clear** **test signaling-group 2 schedule**			

1 If no alarms are registered against the maintenance object then the test sequence is run only once. The ***long clear*** option forces a clear of all alarms if no errors are encountered during testing. The ***short clear*** option only clears alarms pertinent to tests in the short sequence. SEE WARNING BELOW.

2 Refer to the Report Scheduler and System Printer feature specification for more details.

WARNING:
Since the "clear long" options clear all counters if tests pass, it is possible for firmware counters to be cleared even when a problem exists. In some cases customer service might degrade since calls may be routed over defective equipment.

Feature Interactions

Additional data is available after running a test. See the **status signaling-group** command for how to access the additional data.

Output

The following output example is for the **test signaling-group 1** command. The responses display on a test-by-test basis with one line of data for each test result.

```
test signaling-group 1                          SPE A


                           TEST RESULTS

  Port    Maintenance Name  Alt. Name Test No. Result       Error Code
  1       ISDN-SGR                    636      PASS
  1       ISDN-SGR                    639      PASS
  1       ISDN-SGR                    637      PASS


Command Successfully Completed
```

Field descriptions

Port	The signaling group number (1-8) of the signaling group that is being tested.
Maintenance Name	The type of maintenance object that is being tested.
Alt. Name	Not Applicable.
Test No	Test being executed
Result	Test result: Pass, Abort, Fail, No Board, Disabled, Extra Bd.
Error Code	Numeric code explaining why the release failed or aborted. Refer to the detailed list of codes by test number for each MO.

test sp-link

The test sp-link command validates that the system printer link is administered and runs a series of diagnostic tests that return results of the test along with possible error codes.

The system printer link is a link from the switch to an external printer over which jobs can be printed. This link is created by administering the system printer extension and setting up a call to the system printer.

Action/Object	Qualifier	Qualifier Description	Logins	Defaults	Feature Interactions
test sp-link	short	Option for a brief series of nondestructive diagnostic tests.	init inads craft	short	none
	long	Option for a longer, more comprehensive series of both destructive and nondestructive diagnostic tests.			
	schedule	Command is validated and then a scheduling form displays to schedule execution of the command. The command is then placed in the command queue and is executed at the specified time. The information displayed by the command is sent to the system printer instead of the screen.[1] Examples: **test sp-link** **test sp-link sh** **test sp-link l** **test sp-link schedule** **test sp-link sh sch**			

1 Refer to the Report Scheduler and System Printer feature specification for more details.

Output

The following output example is for the **test sp-link** command. The responses display on a test-by-test basis with one line of data for each test result.

```
test sp-link                                    SPE A


                              TEST RESULTS

  Port    Maintenance Name  Alt. Name Test No. Result       Error Code
          SYS-PRNT                    215      PASS
          SYS-PRNT                    213      PASS


Command Successfully Completed
```

Field descriptions

`Port`	Not applicable. Always blank.
`Maintenance Name`	The name of maintenance object.
`Alt. Name`	Alternate means of identifying the maintenance object. This field contains the extension when the object is a data module.
`Test No`	Test being executed
`Result`	Test result: Pass, Abort, Fail, No Board, Disabled, Extra Bd.
`Error Code`	Numeric code explaining why the release failed or aborted. Refer to the detailed list of codes by test number for each MO.

test spe-standby

This command allows the technician to perform hardware diagnostic tests on the standby Switch Processing Element (SPE) in a duplex SPE system. This command tests all MOs in the standby MO. The STBY-SPE MO itself does not have any defined tests. Instead, tests are run on the following MOs when the **test spe-standby** command is run.

MEMORY	DUPINT	PROCR	FL-DATA
SHDW-LNK	DATA-BD	PR-MAINT	PI-BD
SHDW-CIR	DATA-CHL	PI-PT	SPE_SELEC
SW-CTL	CARD-MEM	PKT-CTRL	

Refer to these MOs for more details. This command is only for a High or Critical Reliability systems.

Action/ Object	Qualifiers	Qualifier Description	Logins	Defaults	Feature Interactions
test spe-standby	***short***	Option for a brief series of nondestructive diagnostic tests.	init inads craft	Test Sequence = short; Repeat = 1	See below
	long	Option for a longer, more comprehensive series of both destructive and nondestructive diagnostic tests.			
	repeat number	How many times each test in the sequence is repeated (1-100)			
	clear	This option causes the test sequence (short or long) to repeat until the alarm (if any) is cleared or a single test in the sequence fails.[1] Examples: **test spe-standby long** **test spe-standby l** **test spe-standby s r 2** **test spe-standby c**			

1 If no alarms are registered against the maintenance object then the test sequence is run only once. The ***long clear*** option forces a clear of all alarms if no errors are encountered during testing. The ***short clear*** option only clears alarms pertinent to tests in the short sequence.

Feature Interactions

Testing the standby SPE maintenance object makes the standby SPE unavailable to take over for the active SPE.

Output

The following output example for the **test spe-standby** command assumes that the standby SPE is located in carrier B. The responses display on a test-by-test basis with one line of data for each test result.

```
test spe-standby                                SPE A


                              TEST RESULTS

Port    Maintenance Name Alt. Name Test No. Result       Error Code
01B     SHDW-CIR                   285                   PASS
01B     SHDW-CIR                   284                   PASS
01B     SPE-SELECT                 278                   PASS
01B     DUPINT                     315                   PASS
 .        .                         .                       .
 .        .                         .                       .
 .        .                         .                       .


Command Successfully Completed
```

Field descriptions

`Port`	The port address: cabinet-carrier-slot-circuit
`Maintenance Name`	The type of maintenance object that is being tested.
`Alt. Name`	Alternate means of identifying the maintenance object. This field contains the extension when the object is a data module.
`Test No`	Test being executed
`Result`	Test result: Pass, Abort, Fail, No Board, Disabled, Extra Bd.
`Error Code`	Numeric code explaining why the release failed or aborted. Refer to the detailed list of the codes by test number for each MO.

test station

This command performs hardware diagnostic tests on an individual port circuit assigned to that extension. The technician must specify the extension and a translation is automatically done to the physical port location.

Action/ Object	Qualifier	Qualifier Description	Logins	Defaults	Feature Interactions
test station	***extension***	The station extension (must conform to dial-plan)	init inads craft cust nms	Test Sequence = short; Repeat = 1	none
	short	Option for a brief series of nondestructive diagnostic tests.			
	long	Option for a longer, more comprehensive series of both destructive and nondestructive diagnostic tests.			
	repeat number	How many times each test in the sequence is repeated (1-100)			
	clear	This option causes the test sequence (short or long) to repeat until the alarm (if any) is cleared or a single test in the sequence fails.[1]			
	schedule	Command is validated and then a scheduling form displays to schedule execution of the command. The command is then placed in the command queue and is executed at the specified time. The information displayed by the command is sent to the system printer instead of the screen.[2] Examples: **test station 81709 l** **test station 85136 s r 2** **test station 85036 l r 25** **test station 85036 l r 25 schedule** **test station 84297 r 4** **test station 81709 c**			

1 If no alarms are registered against the maintenance object then the test sequence is run only once. The ***long clear*** option forces a clear of all alarms if no errors are encountered during testing. The ***short clear*** option only clears alarms pertinent to tests in the short sequence. SEE WARNING BELOW.

2 Refer to the Report Scheduler and System Printer feature specification for more details.

WARNING:
Since the "clear long" options clear all counters if tests pass, it is possible for firmware counters to be cleared even when a problem exists. In some cases customer service might degrade since calls may be routed over defective equipment.

Output

The following screen is an example of the output from the **test station 81902 short** command with the assumptions that port in cabinet 1, carrier c, slot 7, circuit 1 is an analog port and extension 81902 is connected to that port. The responses display on a test-by-test basis with one line of data for each test result.

```
test station 81902 short


                            TEST RESULTS

  Port      Maintenance Name  Alt. Name Test No. Result       Error Code
  01C0701   ANL-LINE                    35       PASS
  01C0701   ANL-LINE                    48       PASS
  01C0701   ANL-LINE                    36       PASS


Command Successfully Completed
```

Field descriptions

Port	The port address: cabinet-carrier-slot-circuit
Maintenance Name	The type of maintenance object that is being tested.
Alt. Name	Alternate means of identifying the maintenance object. This field contains the extension when the object is a station.
Test No	Test being executed
Result	Test result: Pass, Abort, Fail, No Board, Disabled, Extra Bd.
Error Code	Numeric code explaining why the release failed or aborted. Refer to the list of codes by test number for each MO.

test synchronization

This command updates all the boards with the correct synchronization source and parameters. The system sends a downlink message to the tone clock, DS1, and Expansion Interface boards to place them in the correct synchronization configuration, providing error-free digital communication between the switch and other PBXs, COs, or customer premise equipment.

Action/ Object	Qualifier	Qualifier Description	Logins	Defaults	Feature Interactions
test synch	***short***	Option for a brief series of nondestructive diagnostic tests.	init inads craft	Test Sequence = short; Repeat = 1	none
	long	Option for a longer, more comprehensive series of both destructive and nondestructive diagnostic tests.			
	repeat number	How many times each test in the sequence is repeated (1-100)			
	clear	This option causes the test sequence (short or long) to repeat until the alarm (if any) is cleared or a single test in the sequence fails.[1]			
	schedule	Command is validated and then a scheduling form displays to schedule execution of the command. The command is then placed in the command queue and is executed at the specified time. The information displayed by the command is sent to the system printer instead of the screen.[2] Examples: **test synchronization r 3** **test synchronization sh r 1** **test synchronization sh r 1 schedule** **test synchronization l**			

1 If no alarms are registered against the maintenance object then the test sequence is run only once. The ***long clear*** option forces a clear of all alarms if no errors are encountered during testing. The ***short clear*** option only clears alarms pertinent to tests in the short sequence.

2 Refer to the Report Scheduler and System Printer feature specification for more details.

Output

The responses display on a test-by-test basis with one line of data displayed for each test result. The following screen is an example of the output for the **test synchronization short** command.

```
test synchronization short


                            TEST RESULTS

  Port    Maintenance Name  Alt. Name Test No. Result       Error Code
          SYNC                        417      PASS


Command Successfully Completed
```

Field descriptions

Port	Not applicable
Maintenance Name	Maintenance object name
Alt. Name	Not applicable
Test No.	Test being executed
Result	Test result: Pass, Abort, Fail, No Board, Disabled, Extra Bd.
Error Code	Numeric code explaining why the release failed or aborted. Refer to the list of codes by test number for each MO.

test tdm

This command tests all the time slots on a bus associated with a PPN or an EPN.

Action/ Object	Qualifier	Qualifier Description	Logins	Defaults	Feature Interactions
test tdm	***pn number***	*nn* = number of the port network to have its TDM bus tested. Both halves (“a” and “b”) of the TDM bus are tested.	init inads craft	Test Sequence = short; Repeat = 1	none
	short	Option for a brief series of nondestructive diagnostic tests.			
	long	Option for a longer, more comprehensive series of both destructive and nondestructive diagnostic tests.			
	repeat number	How many times each test in the sequence is repeated (1-100)			
	clear	This option causes the test sequence (short or long) to repeat until the alarm (if any) is cleared or a single test in the sequence fails.[1]			
	schedule	Command is validated and then a scheduling form displays to schedule execution of the command. The command is then placed in the command queue and is executed at the specified time. The information displayed by the command is sent to the system printer instead of the screen.[2] Examples: **test tdm port-network 1 l** **test tdm port-network 2 sh r 2** **test tdm port-network 2 sh sch** **test tdm port-network 1 l r 25** **test tdm port-network 2** **test tdm port-network 1 c**			

1 If no alarms are registered against the maintenance object then the test sequence is run only once. The ***long clear*** option forces a clear of all alarms if no errors are encountered during testing. The ***short clear*** option only clears alarms pertinent to tests in the short sequence.

2 Refer to the Report Scheduler and System Printer feature specification for more details.

Output

The following screen is an example of the output for the **test tdm port-network 1** command. The responses display on a test-by-test basis with one line of data for each test result.

```
test tdm port-network 1


                            TEST RESULTS

  Port    Maintenance Name  Alt. Name Test No. Result       Error Code
  PN 01A  TDM-BUS                     294      PASS
  PN 01A  TDM-BUS                     296      PASS
  PN 01A  TDM-BUS                     297      PASS
  PN 01B  TDM-BUS                     294      PASS
  PN 01B  TDM-BUS                     296      PASS
  PN 01B  TDM-BUS                     297      PASS


Command Successfully Completed
```

Field descriptions

Port	For TDM-BUS maintenance object the port network number and the bus (A or B) is displayed.
Maintenance Name	Maintenance object name
Alt. Name	Not applicable.
Test No	Test being executed
Result	Test result: Pass, Abort, Fail, No Board, Disabled, Extra Bd.
Error Code	Numeric code explaining why the release failed or aborted. Refer to the list of codes by test number for each MO.

test tone-clock

The test tone/clock command performs hardware diagnostic tests on a technician-specified tone or clock circuit pack.

Action/Object	Qualifier	Qualifier Description	Logins	Defaults	Feature Interactions
test tone-clock	***location***	PCSS	init inads craft	Test Sequence = short; Repeat = 1	none
	short	Option for a brief series of nondestructive diagnostic tests.			
	long	Option for a longer, more comprehensive series of both destructive and nondestructive diagnostic tests.			
	repeat number	How many times each test in the sequence is repeated (1-100)			
	clear	This option causes the test sequence (short or long) to repeat until the alarm (if any) is cleared or a single test in the sequence fails.[1]			
	schedule	Command is validated and then a scheduling form displays to schedule execution of the command. The command is then placed in the command queue and is executed at the specified time. The information displayed by the command is sent to the system printer instead of the screen.[2] Examples: **test tone-clock 01a l** **test tone-clock 01b l schedule**			

1 If no alarms are registered against the maintenance object then the test sequence is run only once. The ***long clear*** option forces a clear of all alarms if no errors are encountered during testing. The ***short clear*** option only clears alarms pertinent to tests in the short sequence.

2 Refer to the Report Scheduler and System Printer feature specification for more details.

Output

The responses display on a test-by-test basis with one line of data for each test result. The following is the output for the **test tone-clock** 1a command.

```
test tone-clock 1a


                            TEST RESULTS

  Port    Maintenance Name  Alt. Name Test No. Result       Error Code
  01A     TONE-BD                     46       PASS
  01A     TONE-BD                     52       PASS
  01A     TONE-PT                     40       PASS
  01A     TONE-PT                     41       PASS
  01A     TDM-CLK                     148      PASS
  01A     TDM-CLK                     149      PASS
  01A     TDM-CLK                     150      PASS
  01A     TDM-CLK                     151      PASS
  01A     TDM-CLK                     574      PASS


Command Successfully Completed
```

Field descriptions

Port	The port address: cabinet-carrier-slot-circuit
Maintenance Name	TONE-BD, TONE-PT, TDM-CLK.
Alt. Name	Not applicable.
Test No	Test being executed
Result	PASS, ABORT, FAIL, NO BOARD, DISABLED, EXTRA BD.
Error Code	Numeric code explaining why the release failed or aborted. Refer to the detailed list of codes by test number for each MO.

test trunk

This command performs hardware diagnostic tests on an entire trunk group or an individual trunk group member, depending on the options entered.

Action/ Object	Qualifier	Qualifier Description	Logins	Defaults	Feature Interactions
test trunk	***group number***	Administered group number (1-99)	init inads craft cust	Test Seq. = short; Repeat = 1	none
	member number	Administered number identifying a particular trunk within a trunk group (1-99).			
	short	Command executes a series of nondestructive diagnostic tests.			
	long	Command executes a more comprehensive and longer version of the both destructive and nondestructive diagnostic tests.			
	repeat number	How many times each test in the sequence is repeated (1-100)			
	clear	This option causes the test sequence (short or long) to repeat until the alarm (if any) is cleared or a single test in the sequence fails.[1]			
	schedule	Command is validated and then a scheduling form displays to schedule execution of the command. The command is then placed in the command queue and is executed at the specified time. The information displayed by the command is sent to the system printer instead of the screen.[2] Examples: **test trunk 78 l** **test trunk 80/1 sh r 2** **test trunk 78/2 l r 25** **test trunk 78/2 l r 25 schedule** **test trunk 80** **test trunk 80 schedule** **test trunk 78 r 4** **test trunk 78 c**			

1 If no alarms are registered against the maintenance object then the test sequence exercises once. The ***long clear*** option forces a clear of all alarms if no errors are encountered during testing. The ***short clear*** option only clears alarms pertinent to tests in the short sequence.

2 Refer to the Report Scheduler and System Printer feature specification for more details.

Output

The responses display on a test-by-test basis with one line of data for each test result. The following screen is an example of the output for the **test trunk 78** command.

```
test trunk 78


                            TEST RESULTS

  Port      Maintenance Name  Alt. Name Test No. Result       Error Code
  01C1505   CO-TRK            078/001   3        PASS
  01C1505   CO-TRK            078/001   36       PASS


Command Successfully Completed
```

Field descriptions

`Port`	The port address: cabinet-carrier-slot-circuit
`Maintenance Name`	The name of maintenance object being tested.
`Alt. Name`	The alternate means of identifying the maintenance object. If the object is a trunk, the field contains `xxx/yyy` (where *xxx* = trunk group number, *yyy* = member number). If the object is a private CO line, the field contains `P/xxx` (where *xxx* = private CO line group number).
`Test No`	The test number being executed
`Result`	The result of the individual test: PASS, ABORT, FAIL, NO BOARD, DISABLED, and EXTRA BD.
`Error Code`	A system-generated number indicating the reason that the test for the named MO failed or aborted.

test tsc-administered

This command submits a switched services request to run the Temporary Signaling Connection's heartbeat test for all administered TSCs on a signaling group.

Action/Object	Qualifier	Qualifier Description	Logins	Defaults	Feature Interactions
test tsc-administered	***signaling group number/***	Signaling group number (1–8)	init inads craft	repeat = 1	Additional data available after running the test. See **status tsc-administered** for how to access additional data.
	tsc index	The number associated with each TSC in a signaling group.			
	repeat number	The number of times each test in sequence is repeated.			
	schedule	Command is validated and then a scheduling form displays to schedule execution of the command. The command is then placed in the command queue and is executed at the specified time. The information displayed by the command is sent to the system printer instead of the screen.[1]			

1 Refer to the Report Scheduler and System Printer feature specification for more details.

Output

The following is an example of the output from the **test tsc-administered 1/1** command. The responses display on a test-by-test basis with one line of data for each test result.

```
test tsc-administered 1/1


                              TEST RESULTS

  Port    Maintenance Name  Alt. Name Test No. Result       Error Code
  1/1     TSC-ADM                     604      PASS


Command Successfully Completed
```

Field descriptions

`Port`	Port address of the administered temporary signaling connection (format = *signaling group no./tsc index*)
`Maintenance Name`	The name of the maintenance object
`Alt. Name`	Not applicable
`Test No.`	The test number being executed
`Result`	Test result: Pass, Abort, Fail, No Board, Disabled, or Extra Bd.
`Error Code`	A system-generated number indicating the reason that the test for the named MO failed or aborted.

traceroute

This command provides the ability to trace the route of C-LAN-originated packets through the LAN. The output shows the ip address of each router or host (hop) that the packets encounter and the time elapsed between each hop. If C-LAN has trouble communicating with a far-end device, the traceroute command can determine “how far” packets get toward the destination.

DEFINITY IP boards include:

- TN799B (or later suffix) CLAN board
- TN802B Medpro board
- TN2302 IP Medpro board

The form lists

- Hops traversed from source to destination
- IP addresses of the hop points and the final destination
- Observed round-trip delay from the source to each hop point

If no reply is received from a potential hop point, the `IP Address` field contains blanks.

The primary use of this command is to determine quickly and unambiguously if the fault lies within Avaya-provided equipment or if the fault is with the LAN or LAN administration to which the Avaya DEFINITY Server switch is connected.

Action/ Object	Qualifier	Qualifier Description	Logins	Defaults	Feature Interactions
traceroute	***ip-address***	where IP address is www.xxx.yyy.zzz	init inads craft customer	Primary	None
	board	Cabinet-carrier-slot address of the C-LAN circuit pack Examples: **traceroute ip-address 123.4.56.789** **traceroute board 1C14**			
	source	an endpoint's virtual port ID Example: **trace-route ip-address 106.245.27.205 source S00015**			

NOTE:
The default DiffServ and 802.1p/Q parameters downloaded to a IP Media Processor board will be used in the execution of **ping** and **traceroute** commands which are sourced from that IP Media Processor. By convention, the recipient of a ping will reply with the same QoS value found in the received packet, hence the measurements reported should reflect the behavior of the type of packets sent. IP Media Processor-sourced pings should reflect audio transport performance and C-LAN-sourced pings should reflect control information transport performance.

Output

The following shows an example output for the C-LAN **traceroute** command. For Medpro boards, the **clan-port (1-17)** qualifier does not appear.

```
traceroute ip-address 135.9.1.22 board 1C14  clan port (1-17)

                              TRACE ROUTE RESULTS

Hop          Time(ms)           IP Address

0            from address       135.9.1.22
01           03,10,05           134.9.14.23
02           11,20,03           134.9.5.103
03           22,01,25           106.245.27.205
04           22,01,25 !N        106.245.27.205
```

Field descriptions

`clan port`
This C-LAN entry identifies the port on the board from which the traceroute command is issued.

`Hop`
The node number (in sequence). The first node (0) is the address from which the traceroute command is issued.

`Time (ms)`
Time from the board to each intermediate destination in milliseconds. If an error occurs at a node, the entry is repeated with an error code immediately following the time. Error codes and their meanings are:

- ! Unable to reach port
- !N Unable to reach network
- !H Unable to reach host
- !P Failure between endpoints
- !F Need fragmentation of data packet
- !S Source return failure
- !X Packet blocked by filter

`IP Address`
The 32-bit network address.

upgrade software

This command upgrades the software text image, the flash component of the LMM firmware, the MTP firmware, the Packet Control (PACCON), and the Processor Interface (PI) firmwares. Depending on whether the system is simplex (Standard reliability) or Duplex (High or Critical reliability), the processes for the upgrade are different:

System	Description of Upgrade
Simplex (Standard reliability)	The command verifies that a software card-mem is present and then, if present, proceeds to reprogram the flash memory and perform a level-4 restart. During the restart of the system, the system technician is prompted to replace the software card-mem with the translation card-mem. Service is provided upon completion of the system restart. Service down time is 5-12 minutes.
Duplex (High or Critical reliability)	The command verifies that a software card-mem is present in the standby SPE, programs the flash memory, resets the standby SPE, and prompts the system technician to replace the software card-mem with the translation card-mem. An interchange of SPEs is performed upon completion of a successful standby upgrade. At the same time, the old active SPE is upgraded automatically with the new software through similar swapping of card-mems. The service disruption time is 1-4 minutes.

WARNING:
Be sure to save translations before this executing this command. It may also be helpful to read the Feature Interactions for this command before upgrading the system software.

Action/Object	Qualifier	Qualifier Description	Logins	Defaults	Feature Interactions
upgrade software	none		init inads craft	none	See below

Feature Interactions

System Restarts

An upgrade causes a system restart: simplex systems perform a Level-4 restart, and duplex systems perform a Level-2 SPE-interchange after the standby is upgraded through a Level-4 restart.

Initcauses

Executing **display initcauses** shows the software upgrade and the system reset level.

Multi-User Contention

When this command is executing, all other maintenance commands are blocked. Exceptions to these are most of the status or display commands. All administration commands are not blocked. It is the user's responsibility to make sure that no new translations are added between the last **save translation** operation and the completion of the **upgrade software** command.

Recent Change History Log

The **upgrade software** command does not log for both simplex and duplex systems. This is due to the clearing of memory during the level 4 reset.

Periodic and Scheduled Maintenance

Periodic and scheduled maintenance is suspended during the upgrade.

Error and Alarm Log

Error and alarm logs before the software upgrade are lost.

Demand Busyout Objects

Maintenance objects that have been demand busyout are released when the processor reboots or interchanges during the software upgrade. If the command is cancelled before the actual reboot or interchange starts, then all demand busyout objects status are preserved.

Data Consistency between SPEs

Data consistency alarms are generated if the software in the active and standby SPE are not consistent.

Disabled Objects

All disabled objects retain their "disabled" status after a software upgrade according to the status recorded in the last **save translation** command.

Output

The following is the output from the **upgrade software** command and a successful simplex upgrade.

```
INITIATING SOFTWARE UPGRADE
MEM-CARD CHECKSUM         PASSED
REPROGRAMMING MTP         PASSED
ERASING MEMORY            PASSED
REPROGRAMMING SPE         PASSED
FLASH TEXT CHECKSUM       PASSED
 UPGRADE COMPLETE
 <beep>
 REPLACE SOFTWARE MEM-CARD WITH TRANSLATION MEM-CARD
 <beep>
```

Explanations and error recoveries to the above steps follow:

INITIATING SOFTWARE UPGRADE:	The system is upgrading the software.
MEM-CARD CHECKSUM:	If the card-mem checksum fails, the system reboots without performing the upgrade. Retry the command with another software card-mem.
REPROGRAMMING MTP:	If the MTP programming fails, the Manager I does not function anymore, meaning that the rest of the upgrade (if it occurs) are not visible and the MTP will not be present to monitor the health of the processor. The only recovery procedure is to power down and power up the system, since the presence of a software card-mem will cause a software upgrade.
ERASING MEMORY:	The rest of the memory is being erased.
REPROGRAMMING SPE:	This shows the status of the reprogramming. A total of 7 Mbytes has to be reprogrammed. If the reprogramming fails in the midst of upgrade, it will take the system into *SPE-down* mode. In this mode, the system technician can only reset the system or display alarms. The system should be reset and another upgrade attempted due to the detection of a software card-mem in the system.

FLASH TEXT CHECKSUM:	If the checksum fails, the software may or may not be healthy, but it will try to run for as long as it can until further system reset through system technician intervention.
REPLACE SOFTWARE MEM-CARD WITH TRANSLATION MEM-CARD:	The system technician is prompted by a beep and this text string on the Manager I to replace the software card-mem with the translation card-mem. The system boots without translation if the replacement is not done within 2 minutes. The only way to recover from this is to replace the card-mem and issue a *reset system 3* to read in the translations again.
UPGRADE COMPLETE:	The software upgrade is complete.

Packet Bus Fault Isolation and Correction

9

General

This chapter describes the fault isolation/correction procedures for the Packet Bus and for the various MOs that use the Packet Bus. Because the Packet Bus is shared by all circuit packs that must communicate on it, a faulty circuit pack can disrupt communication over the Packet Bus. In addition, a circuit pack that does not use the Packet Bus can cause service disruptions if the physical configuration of the switch is being modified (this is discussed in more detail later). For these reasons, isolating the cause of Packet Bus failure can be complicated. In this chapter, a flowchart is provided to aid in this isolation effort, as are detailed discussions of the tools and procedures used in the fault isolation and correction.

This chapter is organized into several sections that provide introductory information, as well as packet bus fault isolation and correction procedures. The sections of the chapter are as follows:

- ‘‘Remote Maintenance versus On-Site Maintenance’’ discusses the strategy and the requirements for performing remote maintenance and on-site maintenance for the Packet Bus.
- ‘‘Tools for Packet Bus Fault Isolation and Correction’’ discusses the tools that are needed to isolate and correct Packet Bus faults.
- ‘‘Packet Bus’’ describes the Packet Bus, its use, and the types of faults that can occur on the Packet Bus. A diagram that shows the physical and logical connections between circuit packs connected to the Packet Bus is also included.
- ‘‘Circuit Packs That Use the Packet Bus’’ describes the various circuit packs, ports, and endpoints that use the Packet Bus. The section discusses how these maintenance objects interact, how a failure of one maintenance object can affect another, and also the failure symptoms of these maintenance objects.

- "Maintenance of the Packet Bus" describes the Packet Bus maintenance software strategy. Similarities and differences between the Packet Bus and the TDM Bus are discussed. An overview of the Fault Isolation and Correction Procedures is also presented.
- "The Maintenance/Test Circuit Pack (TN771D)" discusses the use of the Maintenance/Test circuit pack in normal switch maintenance, as well as its role in Packet Bus fault isolation. The standalone mode of the Maintenance/Test (which is used to perform the Packet Bus Fault Isolation and Correction procedures on-site) is discussed in detail.
- "Packet Bus Fault Isolation Flowchart"presents a flowchart that is used to isolate a Packet Bus problem. This flowchart is the starting point for this process, and it is used to determine if a failure of service is caused by the Packet Bus itself or by another maintenance object on the Packet Bus.
- "Packet Bus Fault Correction" presents the procedures required to correct either a problem with the Packet Bus itself or one that is caused by a circuit pack connected to the Packet Bus.

The Packet Bus Fault Isolation Flowchart is intended to be the normal starting point for isolating and resolving Packet Bus problems. However, anyone who is unfamiliar with Packet Bus maintenance should read the introductory sections to gain a good understanding of the Packet Bus maintenance and the procedures involved.

Remote Maintenance versus On-Site Maintenance

Most packet bus fault isolation and repair procedures require a technician to be on-site. This is true because a packet bus failure is caused by a hardware failure of the packet bus itself or by a circuit pack that is connected to it. However, initial diagnoses can be made via use of the flowchart presented in the "Packet Bus Fault Isolation Flowchart" section of this chapter. However, before implementing the Maintenance/Test Standalone Mode Procedure (described later) and the Packet Bus Fault Correction Procedure, a technician must be on-site.

The flowchart as presented refers to the repair procedures in Chapter 10, "Maintenance Object Repair Procedures", for various MOs. When one of the decision points is reached, a remote technician can refer to the appropriate section and attempt to resolve any fault conditions. In addition, the remote technician can examine some of the other MOs on the flowchart. Keep in mind that if an MO that appears early on the flowchart fails, this failure can cause alarms with MOs that appear later in the flowchart.

The Maintenance/Test Packet Bus port (described in detail later in this chapter) can give the remote technician information about the state of the packet bus. This information can be obtained via the **status system** command and via the PKT-BUS test sequence. As described later, the Maintenance/Test circuit pack may or may not be present at a customer site, depending on system configuration. If a Maintenance/Test circuit pack is not present, one must be taken to the customer site.

In a high or critical reliability system, a Processor Interchange may resolve the packet bus problem. This operation can be done remotely, and is discussed in the ''Packet Bus Fault Correction'' section in this chapter.

Tools for Packet Bus Fault Isolation and Correction

The following list discusses several tools that are (or may be) required to perform Packet Bus Fault Isolation and Correction. The technician should be provided with these tools at the customer site:

- TN771 Maintenance/Test circuit pack for use in standalone mode, as well as the required connectors and cables. (Refer to the ''The Maintenance/Test Circuit Pack (TN771D)'' section in this chapter.)
- Replacement TN771 Maintenance/Test circuit pack may be needed. Conditions for requirement, and the relevant implementation steps are documented in the ''Special Precaution Concerning the TN771'' section in this chapter.
- Backplane pin-replacement kit may be required in the procedures described in the ''Packet Bus Fault Correction'' section of this chapter. If the kit is not available, replacement of a carrier may be required.

Packet Bus

Each port network has its own packet bus, and, accordingly, there is one packet bus MO in each port network. The packet bus is not duplicated, as is the TDM Bus. However, there are several spare leads on the packet bus and, in high and critical reliability systems, these spare leads are used to recover from some failures on the packet bus.

Packet Bus Usage

The packet bus carries ISDN-BRI signaling information for ISDN-BRI stations and data modules and for ASAI adjunct connections. The TN556 ISDN-BRI circuit pack is used for these connections. The SPE interface to the packet bus is the TN778 Packet Control (in high and critical reliability systems, there is one TN778 in each SPE). For systems with multiple port networks, the TN570 Expansion Interface is used to pass messages from the packet bus in one port network to the packet bus in its neighbor. The TN771 Maintenance/Test Circuit Pack (discussed in detail later) provides packet bus maintenance testing and reconfiguration capabilities.

Packet Bus Faults

Two types of packet bus failures can occur:

- **Shorts**. A short occurs when leads on the packet bus become connected together. Such a connection can occur due to component failures on the packet bus interface of a circuit pack, a failure of the cables between carriers or the TDM/LAN terminators, or by pins being bent together on the backplane. Usually, a failure that occurs during normal operation is caused by a circuit pack failure. However, if the system configuration is being modified (for example, circuit packs are being moved), the cause of a subsequent packet bus failure is probably bent pins.
- **Opens**. An open occurs when there is a break on the packet bus such that the electrical path to the termination resistors is broken. Usually, this break is caused by a failed TDM/LAN cable or by a failed TDM/LAN terminator. The break can also be caused by a failure in the backplane of a carrier, although this is unlikely.

Shorts on the packet bus occur much more often than do opens. This is because the incorrect insertion of a circuit pack can cause leads to be shorted together. It is possible for a circuit pack to be the cause of a packet bus fault but still exhibit trouble-free operation. For example, the insertion of a TDM-only circuit pack (TN754B Digital Line) could bend the packet bus pins on the backplane. However, since the circuit pack does not communicate on the packet bus, the pack is not affected by the problem.

Packet bus faults do not necessarily cause service interruptions. However, most packet bus shorts do cause these interruptions. Depending on what leads are defective, the system may be able to recover and continue to communicate. This can be detrimental because it makes isolating the fault difficult. The Maintenance/Test circuit pack provides the capability to detect, and, in some cases, correct packet bus faults.

Packet Bus Connectivity

Various circuit packs communicate on the packet bus (see next section).

For details on ISDN-BRI and ASAI connectivity, refer to “BRI-PORT” and “BRI-SET/ASAI-ADJ” in Chapter 10, ‘‘Maintenance Object Repair Procedures’’. For details on Expansion Interface connectivity, refer to “EXP-INTF”.

Circuit Packs That Use the Packet Bus

Four circuit packs can use the packet bus. The following list identifies and discusses each circuit pack. An explanation of how each circuit pack assists in packet bus maintenance is also included.

NOTE:
The MOs involved with each circuit pack are listed in brackets. Documentation for each maintenance object is provided in Chapter 10, ‘‘Maintenance Object Repair Procedures’’.

- **TN778 Packet Control** [PKT-CTRL] provides the SPE interface to the packet bus, just as the TN777 Network Control does to the TDM Bus. All traffic on the packet bus passes through the packet control.

  The packet control can detect failures of certain control leads on the bus. Such failures are indicated by an inability to transmit data. The packet control can also detect data errors on the packet bus.

- **TN570 Expansion Interface** [EXP-INTF] is used to connect the PNs in the system. For systems that use the packet bus, all Port Network connections must be made with TN570 circuit packs. All packet traffic between PNs passes through a pair of TN570s (one in each port network).

  The Expansion Interface can detect a subset of control lead failures (though not as many as the packet control), and it can detect many data lead failures via parity errors on received data.

- **TN556, TN2198 and TN2208 ISDN-BRI circuit packs** [BRI-BD, BRI-PORT, ABRI-PORT, BRI-SET, BRI-DAT, ASAI-ADJ] provides connections for ISDN-BRI station sets and data modules and for ASAI adjuncts. The Packet Bus is used to carry signaling information for sets and data modules. The Packet Bus passes signaling information and ASAI messages between the SPE and the ASAI adjunct. The ISDN-BRI circuit pack has the same fault detection capabilities as the TN570 Expansion Interface.
- **TN771D (or later) Maintenance/Test circuit pack** is the workhorse of packet bus maintenance. This circuit pack can detect all packet bus failures for the PN in which it resides. In High and Critical Reliability systems, the circuit pack enables the reconfiguring of the packet bus around a small number of failed leads. The TN771D circuit pack provides a standalone mode (that is, one that does not involve communication with the SPE) for inspecting the packet bus for faults. This is a critical tool for the packet bus fault correction procedures, which are described later.

Effect of Circuit Pack Failures on the Packet Bus

A failure of any of the circuit packs described in the previous section can disrupt traffic on the Packet Bus. Some failures cause actual Packet Bus failures with corresponding alarms, while others cause service outages without alarming the Packet Bus (although the failed circuit pack(s) should be alarmed).

The following list discusses the effects on the Packet Bus of a failure on each circuit pack that uses the Packet Bus.

- **TN778 Packet Control**. A failure of the Packet Control typically causes all Packet traffic in the system to fail. As a result, ISDN-BRI sets are not able to make or receive calls, and communication with an ASAI adjunct fails. A failure of the Packet Control may also cause a failure of the Packet Bus itself if the failure is on the interface circuitry. Otherwise, only the Packet Control is alarmed.

  In a High or Critical Reliability system, there is one TN778 Packet Control in each SPE. If a Packet Control failure in the active SPE causes a Packet Bus disruption, performing an SPE interchange may restore service. In some cases, circuit pack failures may require that the circuit pack be replaced before service is restored.
- **TN570 Expansion Interface**. A failure of the Expansion Interface typically causes all Packet traffic in the connected EPN to fail. If the failure is on the Packet Bus interface, the Packet Bus may be alarmed as well.

  In a High or Critical Reliability system, there is one EPN link in each control carrier for each EPN. If an active Expansion Interface failure causes a Packet Bus disruption, performing an Expansion Link switch may restore service. In some cases, circuit pack failures may require that the circuit pack be replaced before service is restored.

- **TN556 ISDN-BRI Circuit Pack**. A failure of the ISDN-BRI circuit pack typically causes some or all ISDN-BRI sets and data modules and/or an ASAI adjunct connected to the circuit pack to fail to function. If the failure is on the Packet Bus interface, the Packet Bus may be alarmed as well.
- **TN771 Maintenance/Test**. A failure of the Maintenance/Test may cause an incorrect indication of a packet bus failure or the inability to detect such a failure. A failure of the packet bus interface of the circuit pack may cause the packet bus to be alarmed.

A failure of the packet bus interface on any of the circuit packs discussed can cause the packet bus to be alarmed. This is true because such a failure may result in shorting packet bus leads together. This typically disrupts ALL packet bus traffic in the affected port network. A failure of the packet bus in the PPN affects packet traffic in the EPNs as well. Also, packet bus failures that do not affect all endpoints on that packet bus may occur. Therefore, a packet bus failure should not be ruled out even if some packet service is still present.

A circuit pack can fail in a manner such that it transmits bad data on the Packet Bus. If the Packet Control fails in such a fashion, all Packet traffic is disrupted (because all traffic requires the Packet Control). Likewise, such a failure on the Expansion Interface may disrupt all Packet traffic in that port network.

However, if an ISDN-BRI circuit pack fails such that it transmits bad data, all devices connected to the circuit pack fail to function. This failure may also disrupt the entire Packet Bus whenever the circuit pack tries to transmit data. Such a disruption may be indicated by Packet Bus alarms that occur and go away, intermittent failures of other Packet circuit packs, and/or interference with other connected endpoints. The failures mentioned are difficult to isolate because of their intermittent nature. In most cases, the failed circuit pack is usually alarmed, and all connected endpoints on the circuit pack are out of service until the circuit pack is replaced. These symptoms help in isolating the fault.

Maintenance of the Packet Bus

The following topics are discussed:

- Comparison between the Packet Bus and the TDM Bus
- Packet Bus Maintenance Software
- Overview of Fault Correction Procedures

Packet Bus and TDM Bus: a Comparison

Although the Packet Bus is similar to the TDM Bus in many ways, there are some important differences. For example, there are two physical TDM Busses in the switch (refer to the TDM-BUS section in Chapter 10, ''Maintenance Object Repair Procedures'', for more information), and one of these busses can fail without affecting the other (although half of the call-carrying capacity is lost in this case). On the other hand, there is only a single Packet Bus in the switch, and a failure of that bus can disrupt all traffic on the Packet Bus.

In High or Critical Reliability systems, the Maintenance/Test circuit pack provides Packet Bus reconfiguration capabilities. This allows the Packet Bus to remain in service with up to three lead failures. There is no corresponding facility on the TDM Bus, where the second physical TDM Bus continues to carry traffic until repairs are completed.

In addition, the system response varies according to the type of bus failure. Specifically, a catastrophic TDM Bus failure (one that affects both TDM Buses) disables ALL traffic in the system, while a catastrophic Packet Bus failure affects only Packet traffic. This means that all TDM traffic is unaffected, while all BRI and ASAI traffic does not work. The significance of this distinction depends on the customer's application. (For example, a customer whose primary application requires ASAI would consider the switch to be out of service, while a customer with a large number of Digital/Analog/Hybrid sets and a small number of ISDN-BRI sets would probably not consider the Packet Bus failure a catastrophic problem.) The only way a Packet Bus failure can affect TDM traffic is via possible impact on system response time in a large switch due to ISDN-BRI endpoint maintenance running. This should rarely happen because the Packet Bus maintenance software is able to prevent this impact for most Packet Bus faults (see the next section).

CAUTION:
Since the correction procedures and some of the fault isolation procedures for the Packet Bus are highly destructive to service throughout the system (inasmuch as the procedures primarily involve removing circuit packs), particular attention must be paid to nondestructive fault isolation. Also, for the same reason, the time taken with destructive procedures must be minimized. This is the major reason that maintenance of the Packet Bus and of the Packet maintenance objects is described in such detail.

Packet Bus Maintenance Software

Packet Bus maintenance software involves the traditional set of error conditions, tests, and alarms relevant to Packet Bus faults. These are described in the PKT-BUS section in Chapter 10, ''Maintenance Object Repair Procedures'', and they are similar in design to the maintenance strategy for most maintenance objects.

In addition, because a Packet Bus failure can cause all BRI/ASAI endpoints in the affected Port Network (and their associated ports and circuit packs) to report failures, special care must be taken to ensure that the flood of error messages from the affected maintenance objects does not overload the system and interfere with TDM Bus traffic. When such a failure occurs, maintenance of Packet circuit packs is affected in the following manner:

- ISDN-BRI circuit pack (BRI-BD) in-line errors indicating possible Packet Bus failures are placed into the error log, but are not acted upon.
- ISDN-BRI port (BRI-PORT, ABRI-PORT) in-line errors indicating possible Packet Bus failures **are neither placed into the error log nor acted upon.**
- ISDN-BRI endpoint (BRI-SET, BRI-DAT, ASAI-ADJ) in-line error **are neither placed into the error log nor acted upon.**
- Circuit pack and port in-line errors that are not related to the Packet Bus, or that indicate a circuit pack failure, are acted upon in the normal fashion.
- Normal background maintenance (periodic and scheduled) is not affected.
- Foreground maintenance (for example, commands executed on the Manager I terminal) are not affected.

These interactions allow normal, non-Packet, system traffic to continue unaffected, and they reduce the number of extraneous entries into the Error/Alarm Logs. If the Packet Bus failure is caused by a failed circuit pack, the circuit pack should appear in the Error/Alarm Logs, which aids in fault isolation.

The following events indicate a Packet Bus failure that requires the actions in the previous paragraph to occur:

- In-line errors that indicate a possible Packet Bus failure reported by two or more Packet circuit packs
- Packet Bus Uncorrectable report from the Maintenance/Test Packet Bus port (M/T-PKT)
- Packet Bus Interface Failure from the Packet Control (PKT-CTRL)

If such a failure occurs, this information will be available in an Error Log entry for PKT-BUS. Refer to the PKT-BUS section in Chapter 10, ''Maintenance Object Repair Procedures'', for more detailed information.

Overview of Fault Correction Procedures

This section gives an overview of the procedures used to (1) isolate the cause of Packet Bus faults and to (2) correct the Packet Bus faults. These procedures are applicable to High and Critical Reliability systems, and they are detailed fully later in this chapter:

1. The first procedure attempts to determine if a circuit pack that interfaces to the Packet Bus is the cause of the Packet Bus problem. The error and alarm logs are examined for entries for these circuit packs, and the normal maintenance procedures for those circuit packs are attempted.
2. If the Packet Bus problem still exists, port circuit packs (those in the purple slots) are removed to look for circuit pack(s) that have failed and/or have damaged the Packet Bus pins (a diagram of the backplane pins is provided later).
3. If the Packet Bus problem is still not resolved, the same procedure is attempted for the control complex circuit packs.
4. If the problem is still not resolved, or if the Packet Bus faults are known to have open leads, a procedure is undertaken in which the bus terminators and cables are replaced. If this does not resolve the problem, the carrier connectivity of the port network is reconfigured to attempt to isolate a faulty carrier.

The Maintenance/Test Circuit Pack (TN771D)

Description

Packet bus reconfiguration is available only in high and critical reliability systems. In such systems that use the packet bus, a Maintenance/Test is required in each port network. In other configurations (for example, Standard Systems, no packet bus use), the circuit pack is optional.

CAUTION:
All TN771 circuit packs must be of TN771D vintage or later.

Normal Packet Functionality

The Maintenance/Test Packet Bus Port provides the packet bus testing and reconfiguration capabilities. When the port is in service, the port continuously monitors the packet bus for faults (or recovery from faults), and it reports this information to packet bus maintenance.

The yellow LED on the TN771D Maintenance/Test circuit pack provides a visual indication of the state of the packet bus, as follows:

- **Blinking** at a rate of 1 per sec — the Maintenance/Test Packet Bus port cannot swap leads to correct a Packet Bus fault (that is, there are too many faults). **The Packet Bus may be unusable**. If the failures detected by the Maintenance/Test Packet Bus port are open lead failures, the Packet Bus may still be operating.
- **On steady** — the Maintenance/Test Packet Bus port has swapped leads on the Packet Bus. **The Packet Bus is still operating**.

  NOTE:
  Because the yellow LED on the Maintenance/Test circuit pack can also be on steady when the other ports on the circuit pack are in use, the ports on the Maintenance/Test circuit pack used for ISDN-PRI trunk testing must be busied out before the Maintenance/Test circuit pack is used to help resolve Packet Bus faults. This is done via the **busyout port PCSS02** and **busyout port PCSS03** commands. Also, be sure to release these ports when the process is completed.

- **Off** — there is no Packet Bus fault present.

  NOTE:
  It takes 5 to 10 seconds for the LED to respond to a change in the state of the Packet Bus.

In normal switch operation, the Maintenance/Test provides the visual feedback of the Packet Bus state. When standalone mode (described in the next section) is in effect, these visual indications are still provided; however, the Packet Bus is never reconfigured, and, as a result, the yellow LED either blinks or is off.

Standalone Mode

The TN771D Maintenance/Test provides a standalone mode for detecting Packet Bus faults. In the standalone mode, a terminal is connected to the Maintenance/Test circuit pack via the Amphenol™ connector on the back of the cabinet. This setup allows the System Technician to determine the state of the Packet Bus without having to access the Manager I terminal to provide these functions, even if the switch is not in service. Note that the Maintenance/Test does not reconfigure the Packet Bus when it is operating in standalone mode.

Standalone mode is used in the Packet Bus Fault Correction procedures. As a result, **a TN771 and a corresponding terminal must be available to the technician who is to perform such procedures**. A High or Critical Reliability system has a TN771 in each port network. However, the customer of a system that does not have High or Critical Reliability may have purchased a TN771 for ISDN-PRI trunk testing, or to increase the system's ability to detect Packet Bus failures.

The **list configuration** command is used to check for the presence of a circuit pack in the system. If a circuit pack is not present in the system, one must be taken to the customer site. The ''Special Precaution Concerning the TN771'' section in this chapter discusses the special cases when a spare TN771 must be taken to the customer site.

NOTE:
When in standalone mode, the yellow LED on the TN771 blinks if there is a Packet Bus fault. If there is no such fault, the yellow LED is off. This is true because Packet Bus reconfiguration cannot occur in standalone mode.

Required Hardware for Standalone Mode

In addition to the TN771, the following equipment is required to use the standalone mode:

1. Terminal or PC with terminal-emulation software. The EIA-232 (RS-232) port should be configured at 1200 baud, no parity, 8 data bits, and one stop bit. This is **not** the same configuration as for the Manager I terminal. Therefore, if the Manager I can be used for this operation (and this depends on the switch configuration and on customer requirements), remember to restore the original communication parameters before returning the Manager I to service.
2. 355A EIA-232 Adapter (COMCODE 105 012 637).
3. 258B Six-Port Male Amphenol Adapter (COMCODE 103 923 025).
4. D8W 8-wire modular cable of an appropriate length to connect the 258A on the back of the cabinet to the 355A adapter. The relevant COMCODE is determined by the length of the cable, as follows:
   - 103 786 786 (7 feet)
   - 103 786 802 (14 feet)
   - 103 786 828 (25 feet)
   - 103 866 109 (50 feet)

Slot Selection for Standalone Mode

When selecting a carrier slot to use for standalone mode in a port network that does not already contain a TN771, keep the following points in mind:

- A port circuit slot (indicated by a purple label) should be used.
- -5 volt power supply must be available in the carrier. This section describes the power supply configurations that provide this power supply.
- It is preferable that the slot chosen is in the A carrier if a free slot that matches the criteria presented in the first two items of information in this list is available.

Entering and Exiting Standalone Mode

NOTE:
When in standalone mode, the red LED on the TN771 is lit. This function is correct, and it serves as a reminder to remove the TN771 from standalone mode.

CAUTION:
The TN771 in standalone must be the ONLY TN771 in the port network. If a TN771 is already in the port network, place that TN771 in standalone mode. Do not insert a second TN771 into standalone mode. System behavior is rendered as undefined if this is done. In addition, the system is not able to detect the extra circuit pack in this case because a TN771 in standalone mode is invisible to the SPE.

CAUTION:
If the TN771 Packet Bus port has reconfigured the Packet Bus in a switch with a High or Critical Reliability system, (indicated by error type 2049 against PKT-BUS), placing the Maintenance/Test in standalone mode causes a loss of service to the Packet Bus. This is true because reconfiguration is not performed in standalone mode. Therefore, this procedure should be considered a service-disrupting procedure.

If the system has a TN771 installed in the Port Network to be examined, use the following steps to enter the standalone mode:

1. Ensure that Alarm Origination is suppressed either at login time or via the Maintenance-Related System Parameters form.
2. Attach the 258B Six-Port Male Amphenol Adapter to the Amphenol connector for the TN771's slot. Connect one end of a D8W 8-wire modular cable to port 1 of the 258B. Connect the other end of the cable to a 355A EIA-232 Adapter. Plug the EIA-232 Adapter into the terminal to be used, and turn the terminal on.
3. Reseat the TN771 circuit pack.

   NOTE:
   In a High or Critical Reliability system, this causes a Minor, Off-board alarm to be raised against the Packet Bus. This alarm is not resolved until the TN771 (in particular, the Packet Bus port is returned to service. To ensure that Packet Bus alarms have been cleared, it may be necessary to restore the TN771 to normal mode.

If there is no TN771 in the Port Network, use the following steps to enter the standalone mode:

1. Attach the 258A Six-Port Male Amphenol Adapter to the Amphenol connector for the slot into which the TN771 is to be inserted. Connect one end of a D8W 8-wire modular cable to port 1 of the 258A. Connect the other end of the cable to a 355A EIA-232 Adapter. Plug the EIA-232 Adapter into the terminal to be used, and turn the terminal on.
2. Insert the TN771 circuit pack into the slot. The system does not recognize the presence of the circuit pack.

If the standalone mode is entered successfully, the following is displayed on the connected terminal:

```
TN771 STANDALONE MODE
(Type "?" at the prompt for help)

Command:
```

Figure 9-1. Normal Standalone Mode Display

CAUTION:
If the display in Figure 9-1 does not appear, be sure to check the wiring between the terminal and the TN771, and also the terminal parameters. If these are correct, the TN771 may be defective. In such a case, follow the procedures to exit standalone mode (described in the next paragraph). Then test the Maintenance/Test circuit pack.

NOTE:
If the TN771 fails while in standalone mode, the message `TN771 circuit pack failed` is displayed, and no further input is accepted on the terminal. The circuit pack must be replaced.

Use the following procedures to exit standalone mode:

1. Remove the 258A Adapter from the Amphenol connector.
2. If the TN771 was installed for this procedure, remove it. Otherwise, reseat the TN771.
3. Be sure that alarm origination is re-enabled on the Maintenance-Related System Parameters form if it was disabled there (if it was disabled at login, it is automatically re-enabled at logoff).

Using Standalone Mode in Packet Bus Fault Isolation and Correction

When the TN771 is in standalone mode, three commands can be used at the terminal:

- **ds** displays the current state of the Packet Bus leads.
- **dsa** toggles auto-report mode on and off. In auto-report mode, the state of the Packet Bus leads are displayed and the terminal beeps whenever a change occurs.
- **?** displays the available commands.

Figure 9-2 presents an example of a standalone mode display. In the display, an ‘S’ indicates a shorted lead, an ‘O’ indicates an open lead, and a blank indicates no fault.

LP	L0	L1	L2	L3	L4	L5	L6	L7	L8	HP	H0	H1	H2	H3	H4	H5	H6	H7	H8	SS	SF	SB	LF
S	S															O							

Command:

Figure 9-2. Example Standalone Mode Display

The information within a standalone mode display is used in the Packet Bus Fault Correction procedures that follow. The TN771 display indicates the specific leads on the backplane to examine for bent or damaged pins. Figure 9-3 on page 9-16 shows the location of the packet bus leads on the backplane as viewed from the front of the carrier, while Figure 9-4 on page 9-17 shows the same slot as viewed from the back of the carrier.

NOTE:
This information is available only from the standalone mode and with an on-site connected terminal. This information is not available from the Manager I, and, thus, it is not available remotely. This is not a concern, inasmuch as this information cannot be used effectively if testing is not on site.

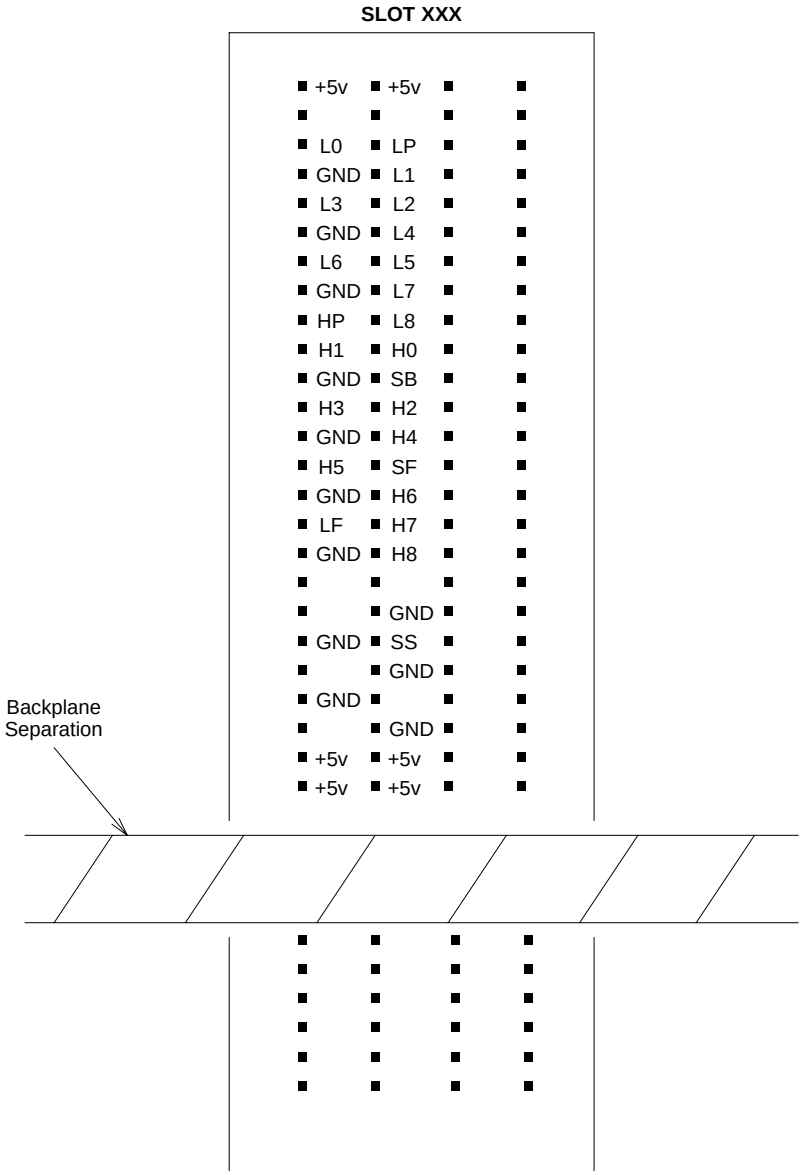

Figure 9-3. Packet Bus Leads on the Backplane - Front View

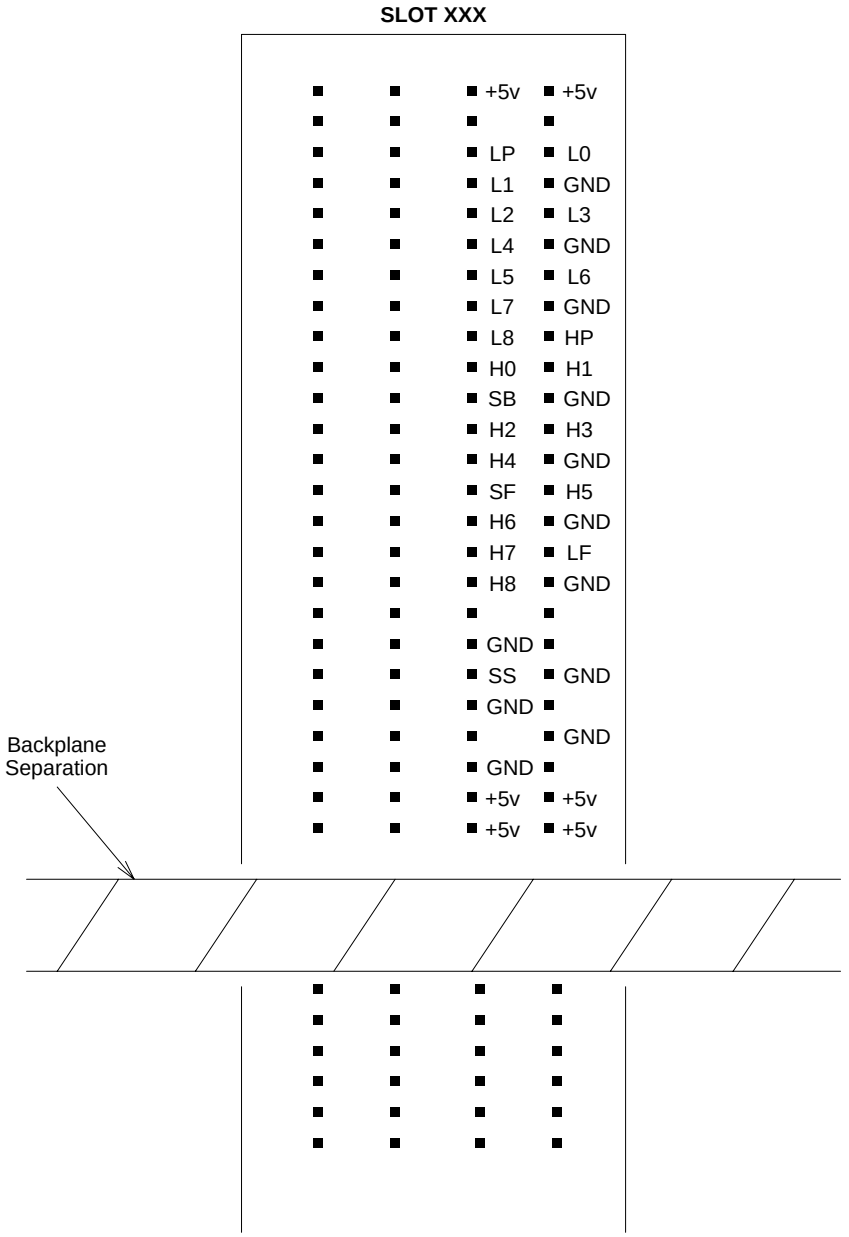

Figure 9-4. Packet Bus Leads on the Backplane - Back View

Special Precaution Concerning the TN771

NOTE:
A new TN771 Maintenance/Test circuit pack must be taken to the customer site whenever the following is true:

- Maintenance/Test Packet Bus port indicates that a Packet Bus fault is present.

  NOTE:
  Such a fault is indicated by a Major or Minor alarm against the Packet Bus. A Major alarm is indicated in the error log by Error Type 513, while a Minor alarm is indicated by Error Type 2049.

- Test #572 of the PKT-BUS test sequence is the only test that fails.

This precaution is taken because certain failures of the Maintenance/Test circuit pack can appear as Packet Bus failures. To ensure that the problem is indeed with the Packet Bus, implement the following steps:

1. Refer to the M/T-PKT Maintenance documentation in Chapter 10, ''Maintenance Object Repair Procedures''. Correct any problems with the TN771 Maintenance/Test Packet Bus port as described in that section. If the TN771 Maintenance/Test circuit pack is replaced during the correction process, enter the **test pkt P long** command to determine if the Packet Bus faults have been resolved. If there are still Packet Bus problems, correct them by using the procedures in the sections that follow.
2. If the Maintenance/Test circuit pack was not replaced, enter the **test pkt P** command. Record the results (PASS/FAIL/ABORT) and error codes for Test #572.
3. Enter the **status system P** command. Record the information listed for the Packet Bus.
4. Busyout the Maintenance/Test circuit pack by entering the **busyout board PCSS** command.
5. Replace the Maintenance/Test circuit pack with the new circuit pack.
6. Release the Maintenance/Test circuit pack by entering the **release board PCSS** command.
7. Enter the **test pkt P** and **status system P** commands as described in Steps 2 and 3.

8. If the data matches the previously recorded data, a Packet Bus problem exists. The original TN771 Maintenance/Test circuit pack is not defective, and it does not need to be returned to the factory. Replace the original TN771, then correct the Packet Bus problem by using the procedures in the sections that follow.
9. If the data does *not* match the previously recorded data, *the original TN771 Maintenance/Test circuit pack is defective*. If there are still indications of Packet Bus problems, correct them by using the procedures in the sections that follow.

Packet Bus Fault Isolation Flowchart

The flowchart in this section presents the steps to be taken for isolating and resolving Packet Bus problems. The order in which the maintenance objects should be examined can be determined by assessing how wide-spread the failure is. For example, since all ISDN-BRI devices communicate with the TN778 Packet Control circuit pack, this MO should be examined early in the sequence. On the other hand, a failure of a TN570 circuit pack in an EPN may cause ISDN-BRI failure in an EPN, but it could not be the cause of a failure in the PPN.

Whenever the flowchart refers to the Maintenance documentation for a specific MO, keep in mind that the repair procedure for that MO may in turn refer to another MO's repair procedure. The flowchart tries to coordinate these procedures so that a logical flow is maintained if the Packet Bus problems are not resolved via the first set of repair procedures. However, a Packet Bus failure can lead to a somewhat haphazard referencing of various MO procedures that may result in your implementing steps that either have already been completed or are not necessary. If this occurs, return to the flowchart at the step that follows the reference to Chapter 10, ''Maintenance Object Repair Procedures'', and then continue.

NOTE:
The following **status** commands can also help diagnose Packet Bus problems:

- **status system**
- **status packet-control**
- **status bri-port**
- **status station**
- **status data-module**

For a description of these commands, refer to the "Status Commands" section in Chapter 8, ''Maintenance Commands and Trouble-Clearing Aids''. The commands provide information about the service state of various Packet maintenance objects. This information can be useful for remote maintenance, inasmuch it can explain the impact of the failure(s) on the system.

The Packet Bus Fault Isolation Flowchart appears on the following two pages.

NOTE:
See the "Flowchart Description and Supplement" section following the flowchart for a description of the flowchart as well as for supplementary information, the availability of which is indicated by the uppercase letters that appear in the flowchart.

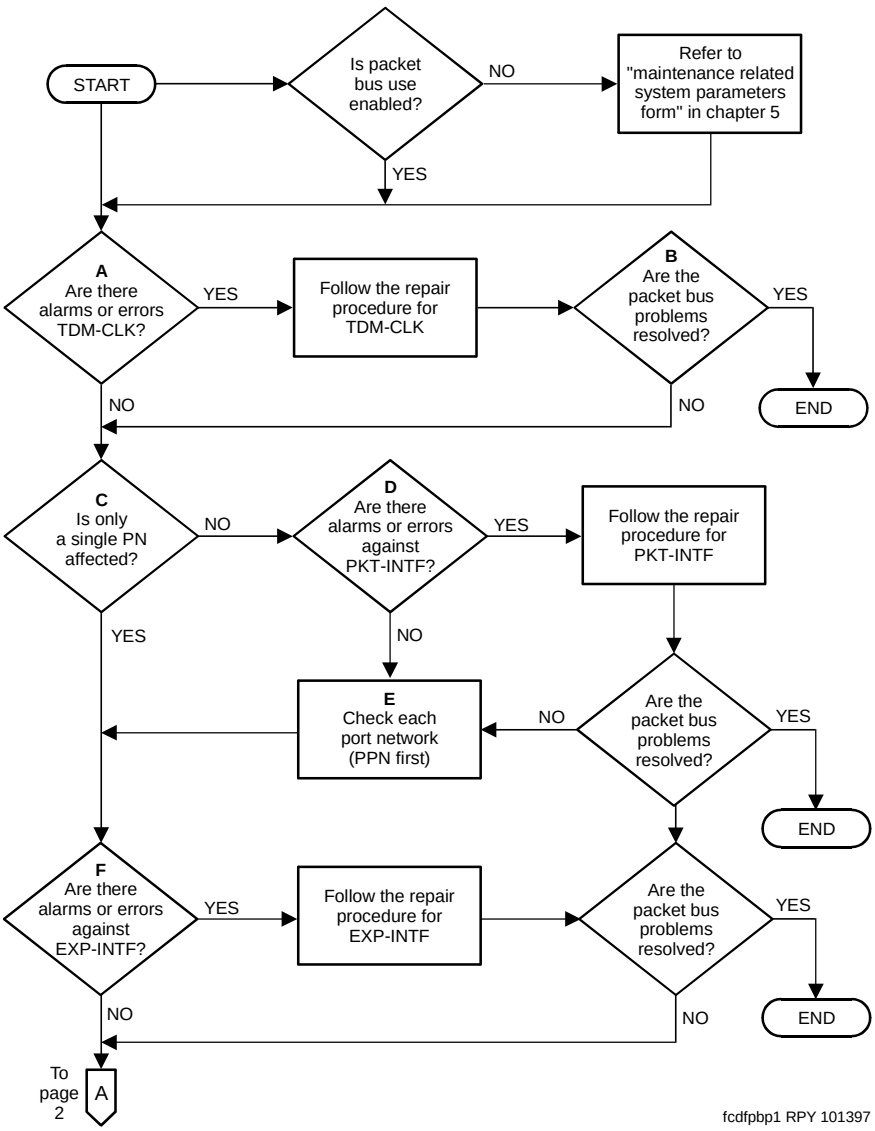

Figure 9-5. Packet Bus Flowchart (Page 1 of 2)

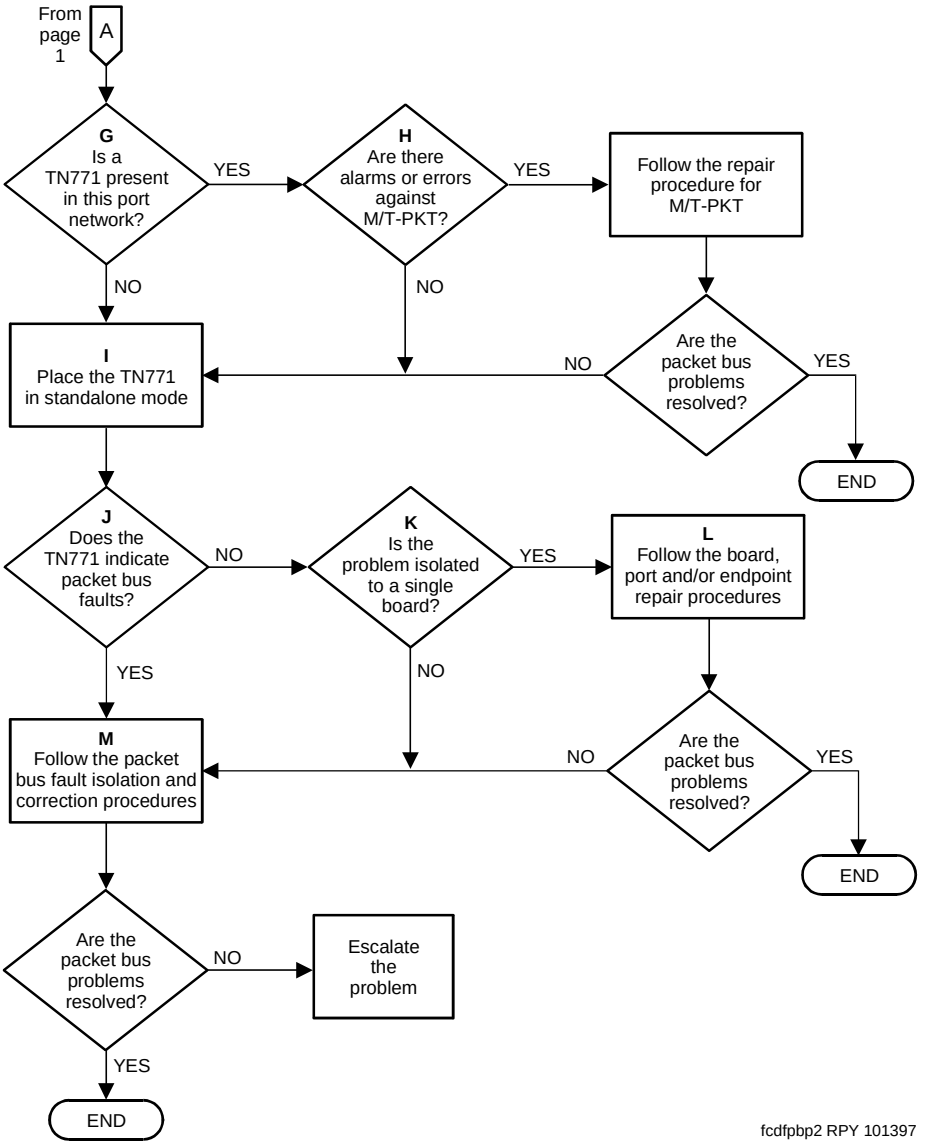

Figure 9-6. Packet Bus Flowchart (Page 2 of 2)

Flowchart Description and Supplement

An uppercase letter in bold (for example, **A, B, C,** etc.) indicates that there is supplemental information with details about the relevant process that could not fit into the appropriate box or diamond.

NOTE:
Due to space restrictions, individual error codes and alarms are not detailed on the flowchart. The maintenance object descriptions in Chapter 10, ''Maintenance Object Repair Procedures'', discuss which errors and alarms could cause or be indicative of Packet Bus problems. In general, unless an error, alarm, or test refers explicitly to the TDM Bus, the error, alarm, or test should be considered a possible cause of Packet Bus problems.

The following paragraphs supplement the corresponding letter in the flowchart.

a. Problems with the system clock (TDM-CLK) can cause service disruptions on the Packet Bus as well as on the TDM Bus. Therefore, if there are alarms active against TDM-CLK, these alarms should be resolved before any other Packet Bus fault isolation is attempted.

   NOTE:
   All TDM-CLK problems should be resolved before the process is continued, even if the problems refer only to the TDM Bus. (This is an exception to the previous note.) This is recommended because a Packet Bus problem cannot cause a TDM-CLK problem, while a TDM-CLK problem can cause a Packet Bus problem.

b. The question ''Are the Packet Bus problems resolved?'' appears several times on the flowchart. This is a general question that can involve several checks. The basic question is ''Are the problems that caused you to use this flowchart resolved?'' Some of the more specific questions might be:

   - Are all Packet Bus alarms resolved?
   - Are all Packet circuit pack (port, endpoint) alarms resolved?

     NOTE:
     If all alarms are resolved, issue the **clear pkt** command. This command attempts to put the switch back into the service state by resolving any BRI problems that exist. Refer to Chapter 8, ''Maintenance Commands and Trouble-Clearing Aids'', for more information.

   - Are all ISDN-BRI stations/data modules and/or ASAI adjuncts in service?
   - Does the Maintenance/Test Packet Bus port (in normal or standalone mode) still indicate a Packet Bus fault?

c. If only a single EPN is affected, the Packet Control is probably not the source of the problem. However, if all of the ISDN-BRI circuit packs are located in a single EPN, assume that the answer to this question is ‘‘No,’’ and check the Packet Control.

d. A Packet problem that affects more than one port network is probably caused by either a Packet Control failure or a PPN Packet Bus failure. The Packet Control is checked before the Packet Bus Fault Correction procedures are implemented.

e. Because the Packet Bus in each port network is physically separate, each affected port network must be checked individually. The PPN should be checked first, however, since any EPN Packet problems are usually resolved once the PPN Packet problem is resolved. After resolving the problem in one port network, be sure to check if the problems in other port networks have also been resolved.

f. This step applies only when an attempt to resolve an EPN Packet Bus problem is made. When checking the Expansion Interfaces in an EPN, be sure to check the corresponding ones in the PPN. Also, recall that all Expansion Interfaces in 286 systems, 386 systems, or later systems that are using the Packet Bus must be TN570s. Using TN776s results in an EPN where TDM traffic works but Packet traffic does not work.

g. If a TN771 is not present, one must be installed to accommodate the standalone mode, which is discussed earlier in this chapter.

h. If a TN771 is present, it can fail in such a fashion that it eventually disrupts the Packet Bus or misinterprets a Packet Bus problem.

i. If work is being done on-site, follow the procedures described earlier in this chapter for placing the TN771 into standalone mode. If work is not being done on-site, go to the next step.

j. The answer is ‘‘Yes’’ if the TN771 in standalone mode indicates any faulty leads. The answer is also ‘‘Yes’’ if Test #572 in the PKT-BUS test sequence fails, and/or if the **status system** display indicates that faulty leads are present and the TN771 in the port network is known to be functioning correctly.

k. If the non-functional endpoints are isolated to a single circuit pack, the circuit pack is probably the cause of the problem.

l. The procedures that must be executed are determined by which maintenance objects on the circuit packs are alarmed. Start with the procedures for the circuit pack errors/alarms, then continue with those for the port. Finally, execute the procedures for the endpoint.

m. Follow the procedures outlined later in this chapter.

Packet Bus Fault Correction

Using and interpreting results from the status system command

The **status system** command can be issued to retrieve information about the Packet Bus. This command is described fully in the “Status Commands” section in Chapter 8, ‘‘Maintenance Commands and Trouble-Clearing Aids’’.

The **status system** command provides the service state, alarm status, and (if the Maintenance/Test Packet Bus port is activated) the number of faulty and open leads. This information can be used to determine the urgency of the repair. In general, a service state of ‘‘out’’ indicates extreme urgency, while a service state of ‘‘reconfig’’ indicates moderate urgency.

CAUTION:
Ultimately, the urgency of a repair is determined by the customer’s requirements. A customer who uses ISDN-BRI for station sets probably considers a Packet Bus failure critical. However, a customer with only a small percentage of ISDN-BRI service may consider even an uncorrectable Packet Bus fault to be of minor importance and may prefer to delay performing repairs, due to their destructive nature.

NOTE:
If maintenance is actively running on the Packet Bus at the time the **status system** command is issued, the data reported for the Packet Bus may be inconsistent. The reason is that this data is updated by the maintenance tests that are running. If the data seems inconsistent, enter the command again.

If test results or the results of the **status system** command indicate that there are 24 faults on the Packet Bus, the problem is probably caused by faulty cables between carriers, or by defective bus terminators. However, before proceeding, make sure that the report is not being falsely given by the Maintenance/Test Packet Bus port. Accordingly, look for an M/T-PKT error in the error log. Then test the Maintenance/Test Packet Bus port by entering the **test port** command. Refer to the ‘‘Special Precaution Concerning the TN771’’ section earlier in this chapter if any problems are suspected.

If the carrier into which a TN771 Maintenance/Test circuit pack is installed does not have a -5 volt power supply, the Maintenance/Test Packet Bus port reports 24 open leads on the Packet Bus (via the **status system** command and via Test #572 of the PKT-BUS test sequence). No failure of the TN771 is indicated in this case because the TN771 is not defective. Refer to CARR-POW maintenance in Chapter 10, ‘‘Maintenance Object Repair Procedures’’, and ensure that a -5 volt power supply is available.

Considerations for High and Critical Reliability Systems

If a High or Critical Reliability system is involved, special considerations involving the features of this type of system must be kept in mind. In particular, if a Packet Bus problem is caused by a duplicated component, switching to the standby component may both alleviate the problem and isolate the faulty circuit pack. Therefore, the commands in the following list should be executed first in a High or Critical reliability system. For more information on these commands, refer to Chapter 8, ''Maintenance Commands and Trouble-Clearing Aids''.

- **reset system interchange** If this command resolves the Packet Bus problem, the problem is with the Packet Control in the (new) standby SPE. Refer to PKT-CTRL maintenance in Chapter 10, ''Maintenance Object Repair Procedures''.
- **set exp-link** If this command resolves the Packet Bus problem, the problem is with either the (new) standby EI Link or the EIs at either end. Refer to EXP-INTF maintenance in Chapter 10, ''Maintenance Object Repair Procedures''.
- **set tone-clock** If this command resolves the Packet Bus problem, the problem is with the (new) standby Tone-Clock. Refer to TDM-CLK maintenance in Chapter 10, ''Maintenance Object Repair Procedures''.

NOTE:
Keep in mind that, even though the steps discussed in the previous list may fail to resolve the problem, the steps are not necessarily fault-proof. Continue with the procedures in the next section.

Troubleshooting Procedures

As we discussed earlier in this chapter, Packet Bus faults are usually caused by a defective circuit pack connected to the backplane, by bent pins on the backplane, or by defective cables/terminators that make up the Packet Bus. The first two faults cause shorts, while the third fault causes either shorts or opens.

There are four procedures for correcting Packet Bus faults. The number of procedures that are to be used to correct faults depends upon a number of factors relevant to system performance and to the content of the procedures themselves. For example, if the Maintenance/Test Packet Bus port is activated, and if there is an indication of open leads on the Packet Bus (either via the **status system** command or via Test #572 failure), **go directly to Procedure 4**. The reason for this is that Procedures 1 through 3 try to locate faulty circuit packs or bent pins behind circuit packs. Since these types of failures can never cause open faults, Procedures 1 through 3 need not be implemented in this case. However, if there are both shorts and opens, execute Procedure 4, then return to Procedure 1 if there are still shorts after the open lead problems are resolved.

CAUTION:
Since Packet Bus fault isolation procedures involve removing circuit packs and possibly disconnecting entire carriers, these procedure have a profound effect on service. Therefore, if possible, implement these procedures after hours or during hours of minimum system use.

NOTE:
Each of these procedures contains one or more steps that require a determination as to whether the Packet Bus problem has been resolved. Accordingly, several condition checks must be performed. We can present each such check in the form of a question, as follows:

- Did the Maintenance/Test circuit pack standalone mode initially indicate the existence of faulty leads, and are these leads no longer indicated?
- Have all alarms against the Packet Bus and Packet circuit packs been resolved?

  NOTE:
  If all alarms are resolved, issue the **clear pkt** command. This command attempts to put the switch back into the service state by resolving any BRI problems that exist. Refer to Chapter 8, ''Maintenance Commands and Trouble-Clearing Aids'', for more information.

- Are all ISDN-BRI stations and data modules as well as any relevant ASAI adjuncts in service?

Note that if one of these conditions is not yet met, the others need not be checked.

The following sections discuss the four procedures for correcting Packet Bus faults.

Procedure 1

Procedure 1 determines if any circuit packs that use the Packet Bus have faults. For each circuit pack type (see Table 9-1 on page 9-27), perform the following steps:

NOTE:
The circuit packs need not be checked in the order presented *if the flowchart in this chapter has been followed*. However, if newly added circuit packs are involved, check these packs first, inasmuch as the packs are most likely to have caused a problem.

1. Display the Error and Alarm Logs for the circuit pack via the **display errors** and **display alarms** commands.
2. If there are errors for the circuit pack, refer to the appropriate maintenance documentation in Chapter 10, ‘‘Maintenance Object Repair Procedures’’, and follow the recommended maintenance procedure to resolve the errors. Note that some of these procedures may refer to PKT-BUS maintenance as the cause of the fault; if so, implement these Packet Bus Fault Correction procedures at that point.
3. After implementing the repair procedure for the circuit pack (and regardless of whether this procedure succeeds or fails), determine if the Packet Bus fault is still present.
4. If the Packet Bus fault is still present, implement Procedure 1 for the next circuit pack.
5. If there are no more circuit packs in the list, go to Procedure 2.
6. If the Packet Bus fault has been resolved, the procedures are completed.

Table 9-1. Circuit Pack Maintenance Objects

Circuit Pack Name	Circuit Pack Code	Associated Maintenance Objects
ISDN-BRI	TN556	BRI-BD, BRI-PORT, ABRI-PORT, BRI-SET, BRI-DAT, ASAI-ADJ
Maintenance/Test	TN771	M/T-BD, M/T-PKT
Packet Control	TN778	PKT-CTRL
Expansion Interface	TN570	EXP-INTF

Procedure 2

Procedure 2 removes and reinserts port circuit packs (those in the purple slots) one or several at a time. Use Procedure 2 for each port circuit pack in the port network until either (1) the problem is resolved or (2) there are no more circuit packs in the port network.

NOTE:
This procedure should also be used for the TN570 Expansion Interface circuit pack in a standard system. For a High or Critical Reliability system, refer to Procedure 3 for the Expansion Interface circuit pack. Also, refer to Procedure 3 for the TN768 or TN780 Tone-Clock circuit pack in a switch with a High or Critical Reliability system.

CAUTION:
The Expansion Interface circuit pack should be the last one checked in this procedure, since removing this circuit pack disconnects its EPN. The Tone-Clock circuit pack should be the next-to-last one checked. In addition, the TN771 must be reseated after the Tone-Clock is reinstalled.

If the Packet Bus problem is present when the circuit pack is inserted, but is resolved when the circuit pack is removed, either the circuit pack or the backplane pins in that slot caused the problem. If the backplane pins are intact, replace the circuit pack.

NOTE:
In a multiple failure situation, the circuit pack could be one cause of the Packet Bus problem. However, there could also be other failures that are causing Packet Bus faults.

In Procedure 2, an option of working either with one circuit pack at a time or with multiple circuit packs simultaneously is available. In view of this, determine the level of service interruption to be allowed during this procedure. If causing a disruption to all users in the port network is deemed permissible, large groups of circuit packs should be worked with. This option allows faster job completion. *However, if large service disruptions are to be avoided, work with one circuit pack at a time*. This option is slower, but it disrupts only the users of a single circuit pack.

CAUTION:
If the TN771 Standalone mode does NOT indicate Packet Bus faults, perform Procedure 2 for ONLY the port (purple) slot Packet circuit packs listed in Table 9-1 on page 9-27. Also, problems with the backplane pins need not be checked for. Determining if the problem is resolved by removing circuit packs is sufficient.

Steps for Procedure 2:

1. Remove one or several circuit packs as appropriate, according to the considerations presented in the previous paragraphs. Any circuit pack(s) (whether Packet or non-Packet) that have been recently inserted should be checked first. It is likely that such a circuit pack caused a new problem. Keep in mind that Packet circuit packs should be checked before non-Packet circuit packs.

   If the decision is made to remove multiple circuit packs, consider working with an entire carrier at a time to ensure a good granularity.

2. Determine if the Packet Bus fault is still present.

3. If the Packet Bus fault is still present:

   - Determine if the backplane pins in the removed circuit pack's slot are bent. Use the output from the Maintenance/Test standalone mode and Figure 9-3 on page 9-16 and Figure 9-4 on page 9-17.

   - If the backplane pins are bent, power down the carrier (refer to the "Removing Power" section in Chapter 5, ''Routine Maintenance Procedures'', straighten or replace the pins, reinsert the circuit pack, restore power (refer to the ''Restoring Power'' section in Chapter 5, and repeat Procedure 2, beginning with Step 2, for the same circuit pack.

   WARNING:
   If this is a High or Critical Reliability system, and if the slot is in the Active control carrier, perform an SPE interchange before changing the circuit pack. Follow the procedures presented in Chapter 6, ''Reliability Systems: A Maintenance Aid''.

   - If the backplane pins are not bent, reinsert the circuit pack(s), and perform Procedure 2 for the next set of circuit packs.

4. If the Packet Bus fault is not present, do the following:

   - Reinsert a circuit pack. If multiple circuit packs have been removed, reinsert the circuit packs **one at a time**, and repeat the following substeps until all of the circuit packs have been reinserted.

   - Determine if the Packet Bus fault has returned.

   - If the Packet Bus fault has returned, the reinserted circuit pack is defective. Replace the circuit pack and then continue.

   - If the Packet Bus fault does not return when all of the circuit packs have been reinserted, the procedure is completed.

Continue with Procedure 3 if all the port circuit packs have been checked, but the Packet Bus fault is still not resolved.

Procedure 3

Procedure 3 removes and reinserts control carrier circuit packs one at a time. The Packet Control, Tone-Clock, and Expansion Interface circuit packs are the only processor complex circuit packs that communicate on the Packet Bus. In addition, the Memory 1 and EPN Maintenance Board circuit packs are connected to the Packet Bus in the backplane (while the Memory 2 circuit pack is not). Therefore, these are the only processor complex circuit packs that are likely to cause a Packet Bus problem in a stable system. As a result, Procedure 3 should be performed only on the Packet Control, Memory 1, and EPN Maintenance Board circuit packs in all systems, and on the Expansion Interface and Tone-Clock circuit packs in High and Critical Reliability systems.

CAUTION:
If the TN771 Standalone mode does NOT indicate Packet Bus faults, perform Procedure 3 for ONLY the Packet Control, Expansion Interface, and Tone-Clock circuit packs. Also, problems with the backplane pins need not be checked for. Determining if the problem is resolved by removing circuit packs is sufficient.

In a system without High or Critical Reliability, do the following:

1. Power down the control carrier. Refer to the ''Removing Power'' section in Chapter 5, ''Routine Maintenance Procedures''.
2. Remove the suspect circuit pack.
3. As in Procedure 2, determine if the backplane pins in the removed circuit pack's slot are bent.
4. If the backplane pins are bent, do the following:
   a. Straighten or replace the pins
   b. Insert the same circuit pack
5. If the backplane pins are not bent, replace the circuit pack (reinsert the circuit pack if a replacement is not available).
6. Turn the power back on to reboot the system. Refer to the ''Restoring Power'' section in Chapter 5, ''Routine Maintenance Procedures''.
7. Determine if the Packet Bus fault is still present.
8. If the Packet Bus fault is still present, do the following:
   a. If the circuit pack was reinserted in Step 5, replace the circuit pack, and repeat Procedure 3.
   b. If the circuit pack was replaced in Step 5, repeat Procedure 3 for the next processor complex circuit pack.
9. If the Packet Bus fault does not recur, the procedure is completed.

If Procedure 3 fails to identify the cause of the problem, go to Procedure 4.

In a High or Critical Reliability System, do the following:

1. If the circuit pack to be replaced is in the SPE, perform an SPE interchange by entering the **reset system interchange** command. For an Expansion Interface circuit pack, enter the **set exp-link** command to switch to the standby expansion link. For a Tone-Clock circuit pack, enter the **set tone-clock** command to switch to the standby Tone-Clock circuit pack.
2. Remove the newly-inactive suspect circuit pack. For a circuit pack in the processor complex, use the procedures in Chapter 6, ''Reliability Systems: A Maintenance Aid''.
3. As in Procedure 2, determine if the backplane pins in the removed circuit pack's slot are bent.
4. If the pins are bent, do the following:
   a. Power down the carrier. Refer to the ''Removing Power'' section in Chapter 5, ''Routine Maintenance Procedures''.
   b. Straighten or replace the pins.
   c. Insert the same circuit pack.
   d. Restore power to the carrier. Refer to the ''Restoring Power'' section in Chapter 5, ''Routine Maintenance Procedures''.
5. If the backplane pins are not bent, insert or replace the circuit pack.
6. Determine if the Packet Bus fault is still present.
7. If the Packet Bus fault is still present, do the following:
   a. If the circuit pack was reinserted in Step 5, replace the circuit pack. Then repeat Procedure 3, starting at Step 2.
   b. If the circuit pack was replaced in Step 5, continue with Step 9.
8. If the Packet Bus fault does not recur, then the procedure is completed.
9. If the suspect circuit pack has been tested in the other control carrier, go to Step 10. Otherwise, implement Step 1, then Steps 2 through 8.
10. Repeat the procedure in the previous step for the next suspect circuit pack.

If all processor complex circuit packs have been checked and the problem is not resolved, continue with Procedure 4.

Procedure 4

Procedure 4 tries to isolate the failure to a particular set of carriers. Only the circuit packs in those carriers are checked. Procedure 4 is used if the preceding procedures fail, because it can help locate multiple circuit pack failures as well as failures of the carrier hardware. The procedure is also used if there are open leads on the Packet Bus. (The faults detected by Procedures 1 through 3 cannot cause open leads.)

In Procedure 4, the TDM/LAN Cable Assemblies and TDM/LAN termination resistor packs are replaced. If this action does not resolve the Packet Bus fault, the carriers are reconfigured by moving the termination resistor packs in such a manner that certain carriers are disconnected from the bus. This is done by moving the termination resistors on the carrier backplanes. To terminate the Packet Bus at the end of a particular carrier, first unplug the cable that connects the carrier to the next carrier and then replace the cable with a termination resistor (see Figure 9-6 on page 9-21). When the length of the Packet Bus is modified via this procedure, circuit packs that are essential to system operation (for example, Processor Complex, Tone-Clock) must still be connected to the new “shortened” Packet (and TDM) Bus. In addition, the Maintenance/Test circuit pack (in standalone mode) must be connected to the “shortened” bus.

WARNING:
Power must be removed from the entire port network before any cables or terminators are removed. Failure to do so can cause damage to circuit packs and power supplies and can be hazardous to the technician. After cabling changes are made and verified, power must be restored to the port network. Use the TN771 Standalone mode to determine if the Packet Bus fault is resolved.

CAUTION:
Circuit packs in carriers that are not part of the shortened bus are not inserted. As a result, these circuit packs are not alarmed. Ignore these alarms for now. All alarms should be resolved when the cabinet is restored to its original configuration.

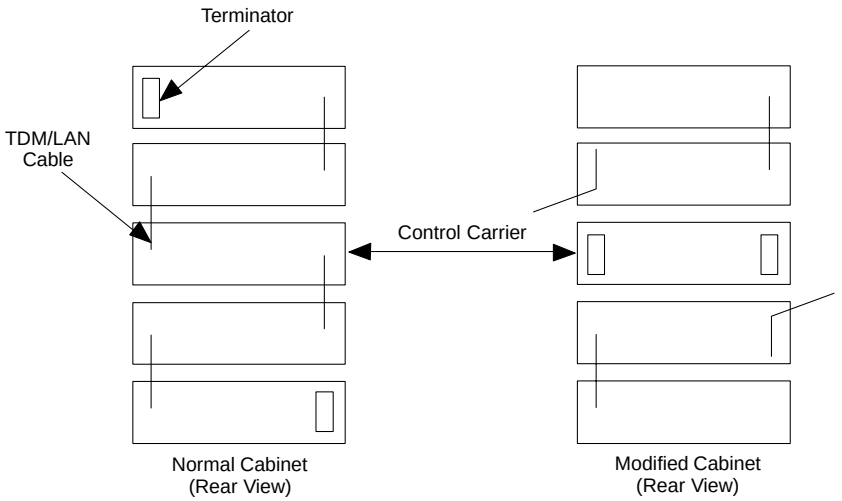

Figure 9-7. Carrier Rewiring Example

Procedure 4 is organized into two parts, as follows:

Part 1:

1. Power down the PN. See "Removing Power" section in Chapter 5, "Routine Maintenance Procedures".
2. Replace all of the TDM/LAN cables and both TDM/LAN terminators.
3. Restore power to the PN. See "Restoring Power" section in Chapter 5, "Routine Maintenance Procedures".
4. Determine if the packet bus fault is still present.
5. If the fault is present, go to Part 2.

Part 2:

Processor Port Network:

1. Terminate the Packet Bus so that it extends only from the Active control carrier (that is, the carrier that contains the Active SPE) to the carrier that contains the Maintenance/Test circuit pack. To allow this procedure to isolate the failure to the smallest possible number of carriers, place the Maintenance/Test circuit pack into a carrier that contains a processor complex, if possible.

2. Determine if the Packet Bus fault is still present. If so, and if there are shorts on the Packet Bus, perform Procedure 2 and/or Procedure 3 for only the circuit packs in those carriers that are connected to the ‘‘shortened’’ Packet Bus. (Procedure 2 is performed for port circuit packs, and Procedure 3 is performed for processor complex circuit packs.)
3. If the Packet Bus fault is not present, extend the Packet Bus to another carrier, and repeat the procedure in the previous step. When a carrier that causes the fault to recur is added, and if there are shorts, perform Procedure 2 and/or Procedure 3 for only the circuit packs in that carrier.
4. If the Packet Bus fault recurs as the Packet Bus is extended, and if Procedures 2 and 3 (if performed) do not resolve the problem, the added carrier(s) that caused the problem to recur are defective and must be replaced.

Other Port Networks:

1. Terminate the Packet Bus so that it extends only from the carrier that contains the Active Expansion Interface to the nearest carrier that contains the Maintenance/Test circuit pack. Place the Maintenance/Test circuit pack into a carrier that contains an Expansion Interface circuit pack in order to allow the procedure to isolate the failure to the smallest possible number of carriers.
2. Determine if the Packet Bus fault is still present. If so, and if there are shorts on the Packet Bus, perform Procedure 2 and/or Procedure 3 for only the circuit packs in those carriers that are connected to the ‘‘shortened’’ Packet Bus.
3. If the Packet Bus fault is not present, extend the Packet Bus to another carrier, and repeat the procedure in the previous step. When a carrier that causes the fault to recur is added, and if there are shorts, perform Procedure 2 and/or Procedure 3 for only the circuit packs in that carrier.
4. If the packet bus fault recurs as the packet bus is extended, and if Procedures 2 and 3 (if performed) do not resolve the problem, the added carrier(s) that caused the problem to recur are defective and must be replaced.

Maintenance Object Repair Procedures

10

For Maintenance Objects on the DEFINITY Wireless Business System (DWBS), refer to the documentation that accompanies the DWBS.

Trouble-clearing is based on the type of indication received, system-alarmed troubles, or user-reported troubles. When viewing the Alarm Log, all major alarms display first, followed by minor alarms, and warning alarms. Resolve the first alarmed entry first because it may affect the rest of the alarmed entries. System-alarmed and user-reported troubles may exist at the same time. Always clear the alarmed troubles first. This often clears the user-reported faults without additional maintenance.

Escalation Procedures

This document is not intended to solve all troubles. When the limits of these procedures are reached and the problem is not resolved, it is the technician's responsibility to escalate to a higher level of technical support. Escalation must conform to the procedures in the *Technical and Administration Plan*.

Cabling Precautions

CAUTION:
Do not cut or bend fiber optic cables. Doing so may adversely affect communication between the EPN and the PP N cabinets.

CAUTION:
To avoid damaging the cable-to-connector interface when removing any Inter-Carrier Cable, grasp the cable connector, not the cable itself.

ABRI-PORT (ASAI ISDN-BRI Port)

MO Name (in Alarm Log)	Alarm Level	Initial Command to Run[1]	Full Name of MO
ABRI-PORT[2]	MAJOR(b)	test port PCSSpp l	ASAI ISDN-BRI Port
ABRI-PORT	MINOR	test port PCSSpp l	ASAI ISDN-BRI Port

1 Where P is the port network number (1 for PPN and 2 or 3 for EPN); C is the carrier designation (A, B, C, D, or E); and SS is the address of the slot in the carrier where the circuit pack is located (01, 02, and so forth); and pp is the 2-digit port number (for example, 01).

2 The alarm level for ABRI ports may be administered using the **set options** command. The alarm level can be set independently for Off-Board and On-Board alarms to MAJOR for all ABRI ports in the system.

NOTE:
Refer to “BRI-PORT (ISDN-BRI Port), ABRI-PORT (ASAI ISDN-BRI Port)” for repair procedures.

AC-POWER

AC Power for AC-Powered Systems

MO Name (in Alarm Log)	Alarm Level	Initial Command to Run[1]	Full Name of MO
AC-POWER	WARNING	test environment P	AC Power

1 Where P is an appropriate port network number determined via the PORT field from the Alarm or Error Log.

NOTE:
For environment maintenance, PPN or EPN cabinet configuration aspects in a high or critical reliabilty system are irrelevant.

The environment maintenance strategy to be used depends on both the cabinet configuration and the type of powering. Also refer to the DC-POWER (DC Power) for environment maintenance strategy.

The AC Power MO represents the AC power provided to the system from a wall outlet. The AC power comes from the wall outlet, through the Power Distribution Unit (PDU), if installed, and is then distributed to the various cabinets. The battery charger monitors AC power via fuse F3 (see Figure 10-1 on page 10-4). If no PDU is installed, the power is supplied directly to each cabinet from each individual wall outlets.

When the system loses power (for example, a power outage in the building), a Major alarm is logged against AC Power and the system goes on battery backup, which is known as Nominal Power Holdover (NPH). If power is restored before the NPH time expires, the alarm is resolved. Each basic control cabinet has separate batteries for NPH. The nominal power holdover provided is as follows:

- The batteries power the system for 10 seconds in a PPN cabinet, for 15 seconds in an EPN cabinet, and for 10 minutes in the control carrier in a Standard Reliability system.
- The batteries also provide system power for 5 minutes in the control carrier in High and Critical Reliability systems.

WARNING:
Before powering down a cabinet or carrier that contains EMBEDDED AUDIX circuit packs (TN566), first power down the AUDIX unit to avoid damaging the AUDIX software. Instructions for powering down this unit are in the "EMBEDDED AUDIX System Power Procedures" in Chapter 5, "Routine Maintenance Procedures", on the circuit pack, and in EMBEDDED AUDIX documentation.

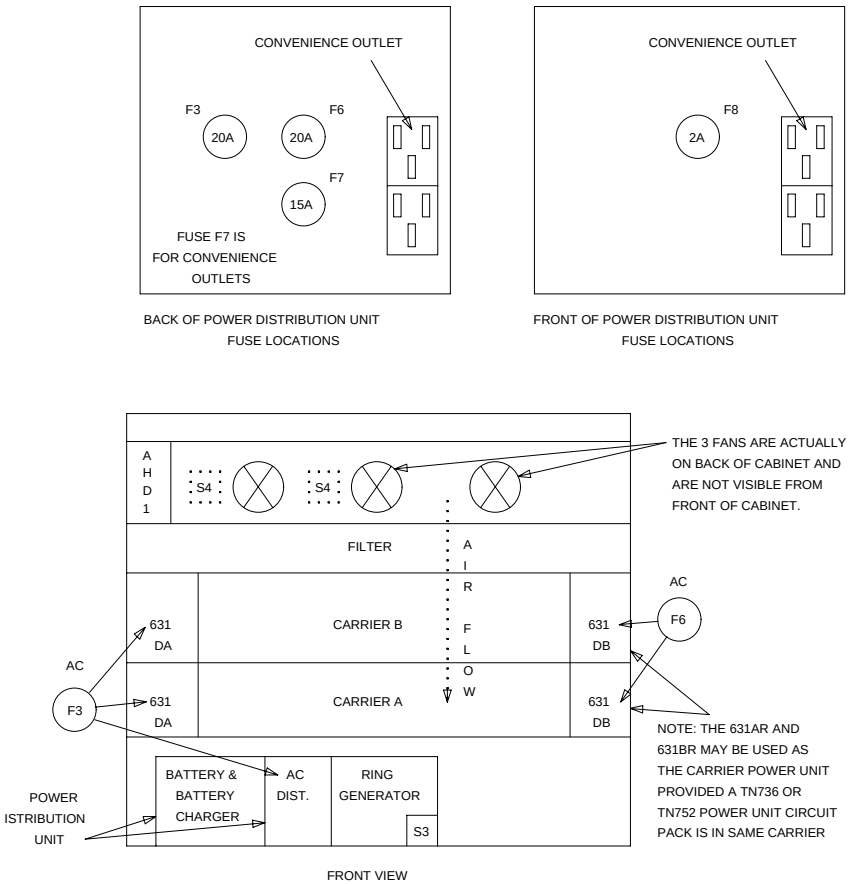

Figure 10-1. Small Cabinet Environment Components (AC-POWER)

Error Log Entries and Test to Clear Values

Table 10-1. AC Power Error Log Entries

Error Type	Aux Data	Associated Test	Alarm Level	On/Off Board	Test to Clear Value
0[1]	0	Any	Any	Any	test environment P sh r 1
513	Any	AC Power Query Test (#78)	WARNING	OFF	test environment P sh r 1

1 Run the Short Test Sequence first. If all tests pass, run the Long Test Sequence.

Refer to the appropriate test description and follow the recommended procedures.

AC Power Query Test (#78)

Table 10-2. TEST #78 AC Power Query Test

Error Code	Test Result	Description / Recommendation
1000	ABORT	System resources required to run this test are not available. 1. Retry the command at 1-minute intervals a maximum of 5 times.
2000	ABORT	Response to the test request was not received within the allowable time period. 1. Retry the command at 1-minute intervals a maximum of 5 times. 2. If the test continues to ABORT with Error Code 2000, check for system powering problems with the A carrier (PPN or EPN). Resolve all DC-POWER alarms. Then, repeat the test. 3. If the test continues to ABORT with a 2000 Error Code, resolve all DUPINT (Duplication Interface) errors in a high or critical reliability system PPN, PR-MAINT (Maintenance/Tape Processor) errors in a standard PPN, or MAINT (EPN Maintenance circuit pack) errors in an EPN. Repeat the test.
2029	ABORT	Internal system error 1. Retry the command at 1-minute intervals a maximum of 5 times.

Continued on next page

Table 10-2. TEST #78 AC Power Query Test — *Continued*

Error Code	Test Result	Description / Recommendation
1	FAIL	**NOTE:** For a Global AC MCC (J58890CH) use the procedures outlined in step 2. The switch is currently without AC power. **WARNING:** *Turn off power to the 397C Battery Charger before removing Fuse F5.* 1. Check for AC at the wall outlet. a. If there is no AC power at the wall outlet, then the problem is not with the system itself. Power must be restored to the wall outlet. b. If there is AC power at the wall outlet, then there could be a problem with the Battery or Battery chargers. Resolve all alarms logged against POWER (Battery & Battery Charger), and rerun the test. If the test still fails, the fuse F5 may have opened. Replace fuse F5 and rerun the test. If the test still fails, then the PR-MAINT (Maintenance/Tape Processor) in a PPN in a system without High or Critical Reliability, the DUPINT (Duplication Interface) circuit pack in a high or critical reliability system PPN, or the EPN MAINT (Maintenance) circuit pack in an EPN multicarrier cabinet system may be incorrectly reporting the problem. c. alarms against these MOs, and rerun the test. There are failures that can occur on the Maintenance/Tape Processor, Duplication Interface, and EPN Maintenance circuit pack that **are not** detected by the respective maintenance, but that cause many, if not all, environment tests to fail. If many environment tests are failing, the suspect circuit pack, depending on the system configuration, should be replaced and the test rerun.

Continued on next page

Table 10-2. TEST #78 AC Power Query Test — *Continued*

Error Code	Test Result	Description / Recommendation
1 *(cont)*	FAIL *(cont)*	2. Procedures for a Global MCC (J58890CH): a. For a nominal holdover system if there is no AC power at the wall outlet, then the problem is not with the system itself. Power must be restored to the wall outlet. b. If there is AC power at the wall outlet, then there could be a problem with the Rectifiers (RM850), Battery Interface Unit, or battery. Resolve all alarms logged against the POWER Maintenance Object, and rerun the test. If the test still fails, the BIU may be defective. Check to see if the BOD alarm LED is “on”, on the BIU. If the BOD LED is “on” replace the Battery Interface Unit (BIU). If the BOD LED is “off” and the BOK LED is “on” then the SYSAM or the EPN Maintenance circuit pack may be incorrectly reporting the problem. Resolve all alarms against these Maintenance Objects and rerun the test.
100	FAIL	The switch is currently without AC power, and AC Power maintenance is in the middle of timing the NPH interval. 1. Follow the repair steps outlined above for Error Code 1.
	PASS	The PR-MAINT (Maintenance/Tape Processor) in a PPN in a system without High or Critical Reliability, the DUPINT (Duplication Interface) circuit pack in a High or Critical Reliability system PPN, or the EPN MAINT (Maintenance) circuit pack in an EPN multicarrier cabinet system has reported that the switch has AC power. If there is no AC power at the wall outlet, then look for and resolve all alarms against the appropriate MO listed.

AC Power for DC-Powered Systems

MO Name (in Alarm Log)	Alarm Level	Initial Command to Run[1]	Full Name of MO
AC-POWER	WARNING	test environment P	AC Power

1 Where P is an appropriate port network number determined via the PORT field from the Alarm or Error Log.

NOTE:
For environment maintenance, the PPN or EPN cabinet configuration aspects in a High or Critical Reliability system are irrelevant.

The environment maintenance strategy to be used depends on both the cabinet configuration and the type of powering. Refer to the “DC-POWER (Single-Carrier Cabinet Power)” information for environment maintenance strategy.

In a DC-powered multicarrier cabinet system, the AC-POWER maintenance object still exists, but serves no functional purpose. Because the system cannot determine the type of powering provided, all AC-POWER tests should always either pass or abort.

Error Log Entries and Test to Clear Values

Table 10-3. AC Power Error Log Entries

Error Type	Aux Data	Associated Test	Alarm Level	On/Off Board	Test to Clear Value
0[1]	0	Any	Any	Any	test environment P sh r 1
513	Any	AC Power Query Test (#78)	WARNING	OFF	test environment P sh r 1

1 Run the Short Test Sequence first. If all tests pass, run the Long Test Sequence. Refer to the appropriate test description and follow the recommended procedures.

System Technician-Demanded Tests: Descriptions and Error Codes

Always investigate tests in the order presented in the following table. By clearing error codes associated with the *AC Power Query Test*, for example, you may also clear errors generated from other tests in the testing sequence.

Table 10-4. System Technician-Demanded Tests: AC-Power

Order of Investigation	Short Test Sequence	Long Test Sequence	D/ND[1]
Battery & Battery Charger Query Test (#5) (a)	X	X	ND
AC Power Query Test (#78)	X	X	ND
Power Unit Query Test (carrier E) (#127) (b)	X	X	ND
Power Unit Query Test (carrier D) (#127) (b)	X	X	ND
Power Unit Query Test (carrier A) (#127) (b)	X	X	ND
Power Unit Query Test (carrier B) (#127) (b)	X	X	ND
Power Unit Query Test (carrier C) (#127) (b)	X	X	ND

Continued on next page

Table 10-4. System Technician-Demanded Tests: AC-Power — *Continued*

Order of Investigation	Short Test Sequence	Long Test Sequence	D/ND[1]
Emergency Transfer Query Test (#124) (c)	X	X	ND
Cabinet Temperature Query Test (#122) (d)	X	X	ND
External Alarm Lead Query Test (#120) (e)	X	X	ND
Analog Ring Generator Initialization Test (#117) (f)	X	X	ND
Analog Ring Generator Query Test (#118) (f)	X	X	ND

1 D = Destructive, ND = Non-destructive

Notes:

a. Refer to “POWER” for a description of this test.

b. Refer to “CARR-POW” for a description of this test.

c. Refer to “EMG-XFER” for a description of this test.

d. Refer to “CABINET” for a description of this test.

e. Refer to “EXT-DEV ADMIN? N” or “EXT-DEV ADMIN? Y” for a description of this test.

f. Refer to “RING-GEN” for a description of this test.

AC Power Query Test (#78)

This test queries the Maintenance/Tape Processor in a PPN in a system without High or Critical Reliability, the Duplication Interface circuit pack in a High or Critical Reliability system PPN, or the EPN Maintenance circuit pack in an EPN multicarrier cabinet system for the status of AC power to the switch. In a DC-powered system, this test should never fail.

Table 10-5. TEST #78 AC Power Query Test

Error Code	Test Result	Description/Recommendation
1000	ABORT	System resources required to run this test are not available.
2000	ABORT	Response to the test request was not received within the allowable time period.
2029	ABORT	Internal system error 1. Retry the command at 1-minute intervals a maximum of 5 times.
any	FAIL	The Maintenance/Tape Processor in a PPN in a system without High or Critical Reliability, the Duplication Interface circuit pack in a High or Critical Reliability system PPN, or the EPN Maintenance circuit pack in an EPN multicarrier cabinet system is incorrectly reporting a problem with AC power. If this test fails, the problem is with the circuit pack and not with AC-POWER. The suspect circuit pack, depending on the system configuration, should be replaced and the test rerun.
	PASS	All that can be inferred is that the PR-MAINT (Maintenance/Tape Processor) in a PPN in a system without High or Critical Reliability, the DUPINT (Duplication Interface) circuit pack in a High or Critical Reliability system PPN, or the EPN MAINT (Maintenance) circuit pack in an EPN multicarrier cabinet system is working properly.

ADM-CONN (Administered Connection)

MO Name (in Alarm Log)	Alarm Level	Initial Command to Run[1]	Full Name of MO
ADM-CONN	MAJOR	status administered-connection N	Administered Connection
ADM-CONN	MINOR	status administered-connection N	Administered Connection
ADM-CONN	WARNING	status administered-connection N	Administered Connection

1 Where N is an appropriate Administered Connection number determined via the PORT field from the Alarm or Error Log.

An Administered Connection provides an end-to-end connection between two access endpoints or data modules. This connection is automatically established when the administered connection is administered and is due to be active. An error is logged when an administered connection cannot be established or when an established administered connection fails. An alarm is logged when a connection cannot initially be established or fails and cannot be reestablished. An alarming strategy is supported on a per administered connection basis. An alarm is raised for a connection when either the number of consecutive failed attempts to establish the connection reaches the alarm threshold or it can be determined that a failed attempt to establish was due to an administered error. The alarm raised (major, minor, warning, or none) is specified in the `Alarm Type` field of the Administered Connection Administration Form.

Error Log Entries and Test to Clear Values

Table 10-6. Administered Connection Error Log Entries

Error Type	Aux Data	Associated Test	Alarm Level	On/Off Board	Test to Clear Value
0 (a)(b)(c)(k)	Any	None	Any	OFF	None
1 (a)(b)(c)(d)(e)	Any	None	Any	OFF	None
2 (a)(b)(c)(f)	Any	None	Any	OFF	None
6 (a)(b)(c)(g)	Any	None	Any	OFF	None
16 (a)(b)(c)(k)	Any	None	Any	OFF	None
17 (a)(c)(h)	Any	None	Any	OFF	None
18 (a)(b)(c)(i)	Any	None	Any	OFF	None
21 (a)(b)(c)(g)	Any	None	Any	OFF	None

Continued on next page

Table 10-6. Administered Connection Error Log Entries — *Continued*

Error Type	Aux Data	Associated Test	Alarm Level	On/Off Board	Test to Clear Value
22 (a)(b)(c)(d)(j)	Any	None	Any	OFF	None
28 (a)(b)(c)(d)(e)	Any	None	Any	OFF	None
29 (a)(b)(c)(k)	Any	None	Any	OFF	None
31 (a)(b)(c)(g)	Any	None	Any	OFF	None
34 (a)(b)(c)(l)	Any	None	Any	OFF	None
38 (a)(b)(c)(m)	Any	None	Any	OFF	None
40 (a)(b)(c)(l)	Any	None	Any	OFF	None
41 (a)(b)(c)(m)	Any	None	Any	OFF	None
42 (a)(b)(c)(l)	Any	None	Any	OFF	None
43 (a)(b)(c)(q)	Any	None	Any	OFF	None
44 (a)(b)(c)(l)	Any	None	Any	OFF	None
50 (a)(b)(c)(d)(n)	Any	None	Any	OFF	None
52 (a)(b)(c)(d)(o)	Any	None	Any	OFF	None
54 (a)(b)(c)(o)	Any	None	Any	OFF	None
58 (a)(b)(c)(l)	Any	None	Any	OFF	None
65 (a)(b)(c)(d)(p)	Any	None	Any	OFF	None
66 (a)(b)(c)(d)(p)	Any	None	Any	OFF	None
69 (a)(b)(c)(d)(p)	Any	None	Any	OFF	None
81 (a)(b)(c)(q)	Any	None	Any	OFF	None
82 (a)(b)(c)(r)	Any	None	Any	OFF	None
88 (a)(b)(c)(d)(s)	Any	None	Any	OFF	None
91 (a)(b)(c)(q)	Any	None	Any	OFF	None
95 (a)(b)(c)(q)	Any	None	Any	OFF	None
96 (a)(b)(c)(q)	Any	None	Any	OFF	None
97 (a)(b)(c)(q)	Any	None	Any	OFF	None
98 (a)(b)(c)(q)	Any	None	Any	OFF	None
99 (a)(b)(c)(q)	Any	None	Any	OFF	None
100 (a)(b)(c)(q)	Any	None	Any	OFF	None
102 (a)(b)(c)(i)	Any	None	Any	OFF	None

Continued on next page

Table 10-6. Administered Connection Error Log Entries — *Continued*

Error Type	Aux Data	Associated Test	Alarm Level	On/Off Board	Test to Clear Value
111 (a)(b)(c)(q)	Any	None	Any	OFF	None
127 (a)(b)(c)(g)	Any	None	Any	OFF	None

Notes:

a. These errors have no specific test associated with them. Refer to Notes b through p for an explanation and appropriate action.

b. These errors are valid only for administered connection established over ISDN facilities; only error 127 is valid for administered connection established over non-ISDN facilities (or between two endpoints on the same switch).

- Aux Data 1—Administered connection establishment failed
- Aux Data 2—Active administered connection failed; attempting reestablishment via auto restoration
- Aux Data 3—Auto restoration failed
- Aux Data 4—Active administered connection failed; attempting reestablishment via fast retry
- Aux Data 5—Fast retry failed

c. These errors are typically associated with administrative problems and are not expected to be of a temporary nature. Therefore, the administered connection is not retried and the failure is alarmed immediately (the alarm threshold specified by the customer is ignored).

d. The address of the destination endpoint is: an unassigned number (1); has an invalid number format (28); or is restricted form terminating calls (“Access Denied”) [due to COR (Class of Restriction)]. Verify that the destination address is correct and that the destination endpoint is administered. The destination endpoint is not administered on the switch where this error is logged.

e. A request has been made to use a transit network or common carrier that cannot be accessed. Check the routing pattern used by this Administered Connection and verify that the inter-exchange carrier specified is correct.

f. The exact failure cause is unknown or has been mapped to one of these values. If this is not a temporary condition, try reversing the direction of the Administered Connection (that is, originate the Administered Connection from the destination switch). This may yield another failure cause.

g. The destination endpoint is not available. Check the status of the destination endpoint (using **status access-endpoint** or **status data-module**) and verify that the endpoint is not busy or otherwise unavailable (for example, out-of-service). The status for the destination endpoint is not available on the switch where this error is logged.

h. This switch sent an ISDN message to another switch, which either did not respond (18) or did not respond within the allotted time (102). This could be due to link failure or congestion or outage at the other switch.

i. The address of the destination endpoint has changed. Verify that the new address is correct and change the Administered Connection accordingly. The destination endpoint is not administered on the switch logging this error.

j. Indicate that a resource (for example, a circuit or bearer capability) required by the administered connection is not presently available.

k. A network failure (38) or temporary failure (41) has occurred. Error Log entries for other maintenance objects (for example, DS1-BD or ISDN-LNK) may indicate a local problem.

l. A request to use a network service has been denied because the service has not been purchased. Check the routing pattern used by this Administered Connection and verify that the service type is correct. If the service type appears correct, check with the customer or network provider or both to determine what services have been purchased by the customer.

m. Indicate that outgoing calls may be barred on the originating switch (52) or that incoming calls may be barred on the destination switch (54). To restore an administered connection failure, issue the **status administered connection** command for current administered connection state (observe the retry count). If the administered connection state is “failed,” then verify and correct the Administered Connection Administration Form.

n. The requested bearer capability (65), channel type (66), or facility (69) is not implemented or is unknown to the network. Check the address of the destination endpoint and the routing pattern used by this Administered Connection, and verify that they are correct and available.

o. These errors indicate that an ISDN protocol error has occurred.

p. The destination endpoint (or some intermediate facility) is not compatible with the originating endpoint. Check the BCC fields of the routing pattern used by this Administered Connection. Also, check if the originating and destination endpoints are compatible (for example, the originating access endpoint is voice-grade data, and the destination access endpoint is 64k data).

ADX8D-BD (AUDIX Circuit Pack)

MO Name (in Alarm Log)	Alarm Level	Initial Command To Run[1]	Full Name of MO
ADX8D-BD	MINOR or WARNINGS	test board PCSS sh	AUDIX Circuit Pack

1 *UU* is the universal cabinet number (1 for PPN, 2 - 3 for EPNs). *C* is the carrier designation (A, B, C, D, or E). *SS* is the number of the slot in which the circuit pack resides (01 to 21).

The ADX8D-BD maintenance object represents a TN566/TN2169 EMBEDDED AUDIX circuit pack (sometimes called Embedded AUDIX) operating in digital-port (DP) mode. For circuit pack problems, see “XXX-BD (Common Port Circuit Pack)”. Port level problems are covered by ADX8D-PT.

EMBEDDED AUDIX consists of two circuit packs that occupy 5 slots on a port cabinet. The tests described in this manual apply only to switch-side maintenance which tests circuit pack components related to the TDM bus interface. The AUDIX system has an extensive maintenance strategy that is described in *EMBEDDED AUDIX System Maintenance*, 585-300-110.

ADX8D-PT (AUDIX Digital Port)

MO Name (in Alarm Log)	Alarm Level	Initial Command To Run[1]	Full Name of MO
ADX8D-PT	MINOR	test port PCSSpp l	AUDIX Digital Port
ADX8D-PT	WARNING	test port PCSSpp sh	AUDIX Digital Port

1 *UU* is the universal cabinet number (1 for PPN, 2 - 3 for EPNs). *C* is the carrier designation (A, B, C, D, or E). *SS* is the number of the slot in which the circuit pack resides (01 to 21). *pp* is the two digit port number (01, 02,and so on).

The ADX8D-PT maintenance object represents a port on a TN566/TN2169 EMBEDDED AUDIX circuit pack (sometimes called Embedded AUDIX) operating in digital-port (DP) mode. The maintenance strategy for ports on the TN566 operating in control-link mode is described in ADX16A-PT.

The tests described in this section apply only to switch-side maintenance which tests circuit pack components related to the TDM bus interface. The AUDIX system has an extensive maintenance strategy that is described in *EMBEDDED AUDIX System Maintenance*, 585-300-110.

AUDIX resides on a combined pair of circuit packs: the TN566 Multifunction Board (MFB) and the TN2169 Alarm Board (ALB). Because of its size this combination occupies 5 slots, but only 1 slot is functional as far as the switch is concerned. The other 4 slots are seen by the switch as “AUDIX-reserved” slots (or ADXDP-RS/ADX8D-RS.)

In DP mode the TN566 pack supports up to 8 voice ports, each with a primary information channel and a secondary information channel. Ports are administered in increments of two. When a call to a station with an AUDIX login is not answered, AUDIX answers the call using one of the available voice ports.

Unlike other AUDIX systems, EMBEDDED AUDIX is not an adjunct.

CAUTION:
Never do any of the following without first shutting down AUDIX. Follow instructions on the TN566/TN2169 faceplate:

- *Remove EMBEDDED AUDIX circuit packs*
- *Cycle power to a carrier containing EMBEDDED AUDIX circuit packs*
- *Remove power to a carrier containing EMBEDDED AUDIX circuit packs*

Error Log Entries and Test to Clear Values

Table 10-7. EMBEDDED AUDIX Digital Port Error Log Entries

Error Type	Aux Data	Associated Test	Alarm Level	On/Off Board	Test to Clear Value
0[1]	0	Any	Any	Any	test port PCSSpp sh r 1
1(a)	40987	None	WARNING	OFF	
1(b)	1 to 20	None	WARNING	OFF	
15(c)	Any	None			
18(d)	0	busyout port PCSSpp	WARNING	OFF	release port PCSSpp
23(e)	0	None	WARNING	OFF	
130(f)		None	WARNING	ON	test port PCSSpp sh
257(g)	40971	None			
513(h)	Any	None			
1537(i)	40968	None	WARNING	OFF	
1793		Voice & Ctrl. Local Loop Test (#13)	MIN/WRN[2]	ON	test port PCSSpp l r 3
2049		NPE Crosstalk Test (#9)	MIN/WRN[2]	ON	test port PCSSpp l r 3
2305(j)	40967	None			
3840(k)	40965	None			
3840(l)	41029	None			

1 Run the Short Test Sequence first. If all tests pass, run the Long Test Sequence. Refer to the appropriate test description and follow the recommended procedures.

2 Minor alarms on this MO may be downgraded to Warning alarms based on the values used in the **set options** command.

Notes:

a. The user may experience a noisy port or link. This is an off-board problem that is detected by the port circuit. If this problem exists, replace the circuit pack (see caution at the beginning of this section). Once the problem is resolved, the alarm is retired after a predetermined time.

b. At least 15 off-board problems have been detected with the link to the voice port. When an error with the link is detected, an on-board counter is incremented. Also see Note (a).

c. This is an internal type error that occurs when an audit request fails.

d. The port is busied-out by command. Use **release port PCSSpp**.

e. The circuit pack is administered but not physically installed. The alarm will clear when a circuit pack is inserted.

f. The circuit pack has been removed or has been insane for more than 21 minutes. To clear the error, reinsert or replace the AUDIX circuit pack (see p caution at the beginning of this section).

g. Something is interfering with transmitting to the voice port. This is usually an on-board problem and can be ignored if no user complaints are received.

h. AUDIX is not available to the switch, possibly due to a busyout on the AUDIX system. Check out the AUDIX system referring *EMBEDDED AUDIX System Maintenance*, 585-300-110, if necessary.

i. An in-line maintenance error has generated an off-board warning due to some problem with the link to the voice port. This can be ignored if no user complaints are received. If the problem persists, replace the circuit pack (see precaution at the beginning of this section). Once the problem is resolved, the alarm is retired after a certain period of time.

j. The link between the circuit pack and the voice port is successfully reset. No craft action is necessary.

k. No voice ports are connected to the EMBEDDED AUDIX circuit pack. No maintenance action is required.

l. The message buffer in the circuit pack is full.

System Technician-Demanded Tests: Descriptions and Error Codes

Always investigate tests in the order presented in the table below when you are inspecting errors in the system. By clearing error codes associated with the *Voice and Control Channel Local Loop Around Test* for example, you may also clear errors generated from other tests in the testing sequence.

Order of Investigation	Short Test Sequence	Long Test Sequence	D/ND[1]
Voice and Control Channel Local Loop Around Test (#13)		X	ND
NPE Crosstalk Test (#9)		X	ND

1 D = Destructive; ND = Nondestructive

NO-OP Tests

The maintenance strategy for EMBEDDED AUDIX emulates the one for DIG-LINE. The tests listed below apply only to DIG-LINE and not to EMBEDDED AUDIX. These are referred to as *NO-OP* tests, and they always return PASS.

- Electronic Power Feed Test (#11)
- Station Lamp Updates Test (#16)
- Station (Digital) Audits Test (#17)

NPE Crosstalk Test (#9)

This test verifies that this port's NPE channel talks on the selected time slot and that it never crosses over to time slots reserved for other connections. If the NPE is not working correctly, one-way and noisy connections may be observed. This test is part of a port's Long Test Sequence, and it takes about 20 to 30 seconds to complete.

Crosstalk testing is performed on both the primary information channel (voice) and on the secondary information channel (data) associated with each EMBEDDED AUDIX port. If this test fails on either channel, the voice port is taken out-of-service.

Table 10-8. TEST #9 NPE Crosstalk Test

Error Code	Test Result	Description/Recommendation
1	ABORT	During testing of the primary information channel, system resources may not have been available. Also, the port may have been busy during the test. 1. Check the port status. Use the **display port PCSSpp** command to determine the voice port extension of the port. 2. Use the **status station** command to determine the service state of the port. If the service state indicates that the port is in use, you must wait until the port is idle. 3. When the port is idle, retry the command at 1-minute intervals a maximum of 5 times.
2	ABORT	System resources may not have been available, or the port may have been busy during the test. 1. Retry the command at 1-minute intervals a maximum of 5 times.

Continued on next page

Table 10-8. TEST #9 NPE Crosstalk Test — *Continued*

Error Code	Test Result	Description/Recommendation
1000	ABORT	System resources required to run this test are not available. The port may be in use. 1. Use the **display port PCSSpp** command to determine the voice port extension of the port. 2. Use the **status station** command to determine the service state of the port. If the service state indicates that the port is in use, you must wait until the port is idle before retesting. 3. When the port it idle, retry the command at 1-minute intervals a maximum of 5 times.
1001	ABORT	System resources required to run this test are not available. Try (a).
1002	ABORT	The system could not allocate time slots for the test. The system may be under heavy traffic conditions, or it may have time slots out-of-service due to TDM-BUS errors. Refer to “TDM-BUS” to diagnose any active TDM-BUS errors. 1. If system has no TDM-BUS errors, and if it is not handling heavy traffic, retry the command at 1-minute intervals a maximum of 5 times.
1003	ABORT	The system could not allocate a tone receiver for the test. The system may be oversized for the number of Tone Detectors present, or some Tone Detectors may be out-of-service. 1. Resolve any “TTR-LEV” errors. 2. Resolve any “TONE-PT” errors. 3. Retry the command at 1-minute intervals a maximum of 5 times.
1004	ABORT	The port was put in use during the test. The test has been aborted. Use the **display port PCSSpp** command to determine the voice port extension of the port. Use the **status station** command to determine the service state of the port. If the port is in use, wait until the port is idle before testing.
1020	ABORT	Test disabled by background testing. Use the **status station** command to determine when the voice port is available for testing.
2000	ABORT	Response to the test request was not received within the allowable time period. 1. Retry the command at 1-minute intervals a maximum of 5 times.

Continued on next page

Table 10-8. TEST #9 NPE Crosstalk Test — *Continued*

Error Code	Test Result	Description/Recommendation
1 2	FAIL	The NPE of the tested port is transmitting in error. This causes noisy and unreliable connections. Failure code 1 indicates that the Crosstalk test failed on the primary channel. Failure code 2 indicates that the Crosstalk test failed on the secondary channel. 1. Replace the circuit pack.
	PASS	The port is using its allocated time slots correctly. 1. To be sure that this is not an intermittent problem, repeat this test up to a maximum of 10 times to make sure it continues to pass. 2. If complaints still exist, examine the connections.

Voice and Control Channel Local Loop Test (#13)

This test checks the information and control channels between the Switch Processing Element (SPE) and the EMBEDDED AUDIX port circuit. First, the primary information (voice) channel loop back test is run.

While the primary information channel is still looped around, the Control Channel Loop Around Test is performed. The Loop Around Test for the secondary information (data) channel is then performed. This test is the same as the primary information channel loop around test.

Next, a Conference Test is implemented for the primary information channel. This test is the same as Conference Test #6.

Only one value (Pass, Fail, or Abort) is generated as a result of the four tests run. If any test fails or aborts, the sequence is stopped.

Table 10-9. TEST #13 Voice and Control Channel Local Loop Test

Error Code	Test Result	Description/Recommendation
	ABORT	Internal System Error. Try (a).
1000	ABORT	System resources required to run this test are not available. The port may be in use. 1. Use the **display port PCSSpp** command to determine the voice port extension of the port. 2. Use the **status station** command to determine the service state of the port. If the service state indicates that the port is in use, you must wait until the port is idle before retesting. 3. When the port it idle, retry the command at 1-minute intervals a maximum of 5 times.
1001	ABORT	System resources required for this test are not available. Try (a).
1002	ABORT	The system could not allocate time slots for the test. The system may be under heavy traffic conditions, or may have time slots that are out-of-service due to TDM-BUS errors. Refer to “TDM-BUS” to diagnose TDM-BUS errors. 1. If the system has no TDM-BUS errors, and is not handling heavy traffic, retry the command at 1-minute intervals a maximum of 5 times.
1003	ABORT	The system could not allocate a tone receiver for the test. The system may be oversized for the number of Tone Detectors present, or some Tone Detectors may be out-of-service. 1. Resolve any “TTR-LEV” errors. 2. Resolve any “TONE-PT” errors. 3. If neither condition exists, try (a).
1004	ABORT	The port was put in use during the test. 1. Use the **display port PCSSpp** to determine the voice port extension of the port. 2. Use the **status station** command to determine the service state of the port. If the service state indicates that the port is in use, you must wait until the port is idle before retesting. 3. When the port it idle, retry the command at 1-minute intervals a maximum of 5 times.
2000	ABORT	Response to the test was not received within the allowable time period.
2100	ABORT	Could not allocate the necessary system resources for this test. 1. Retry the command at 1-minute intervals a maximum of 5 times.

Continued on next page

Table 10-9. TEST #13 Voice and Control Channel Local Loop Test — *Continued*

Error Code	Test Result	Description/Recommendation
7	FAIL	Conference Test failed on the primary channel. Some users may not notice a disruption in service. In extreme cases, the conferencing feature may not work at all.
14	FAIL	The primary voice channel is not transmitting properly. User impact may range from no noticeable effect to loss of use of this port.
15	FAIL	The control channel between the processor and EMBEDDED AUDIX circuit pack is not transmitting properly. User impact may range from no noticeable effect to loss of use of this port. This failure could also be disruptive to other users.
16	FAIL	The secondary voice channel is not transmitting properly. User impact may range from no noticeable effect to loss of use of this port.
None	FAIL	The test failed for reasons external to the EMBEDDED AUDIX circuit pack. 1. Run circuit pack tests to check the Tone Generator circuit pack and the Tone Detector circuit pack by using the **test board PCSS s** command. 2. Resolve any problems that are detected on the Tone Generator circuit pack or Tone Detector circuit pack. 3. If the Tone Generator and Tone Detector circuit packs are functioning properly, and if the test still fails, replace the AUDIX circuit pack (see precaution at the beginning of this section).
	PASS	Voice and Control Channel Local Loop test passed. All channels are transmitting properly. 1. To be sure that this is not an intermittent problem, repeat this test up to 10 times and see if it continues to pass. 2. If complaints still exist, examine the connections.

ADX16D-B (16 Port AUDIX Circuit Pack)

MO Name (in Alarm Log)	Alarm Level	Initial Command To Run[1]	Full Name of MO
ADX16D-B	MINOR	test board PCSS sh	AUDIX Circuit Pack
ADX16D-B	WARNING	test board PCSS sh	AUDIX Circuit Pack

1 *UU* is the universal cabinet number (1 for PPN, 2 - 3 for EPNs). *C* is the carrier designation (A, B, C, D, or E). *SS* is the number of the slot in which the circuit pack resides (01 to 21).

The ADX16D-BD maintenance object represents a TN566/TN2169 EMBEDDED AUDIX circuit pack combination operating in 16 port mode digital (DP). For circuit-pack-level problems, see “XXX-BD (Common Port Circuit Pack)”. Port-level maintenance is covered by ADX16D-PT.

EMBEDDED AUDIX consists of 2 circuit packs that occupy 5 slots on a port carrier. The tests described in this manual apply only to switch-side maintenance which tests circuit pack components related to the TDM bus interface. The AUDIX system has an extensive maintenance strategy of its own that is described in *EMBEDDED AUDIX System Maintenance*, 585-300-110.

ADX16A-BD (AUDIX Circuit Pack)

MO Name (in Alarm Log)	Alarm Level	Initial Command To Run[1]	Full Name of MO
ADXCL-BD or \ADX16A-BD	MINOR, or WARNINGS	test board PCSS sh	AUDIX Circuit Pack

1 *UU* is the universal cabinet number (1 for PPN, 2 - 3 for EPNs). *C* is the carrier designation (A, B, C, D, or E). *SS* is the number of the slot in which the circuit pack resides (01 to 21).

The ADX16A-BD maintenance object represents a TN566/TN2169 EMBEDDED AUDIX circuit pack combination operating in control-link (CL) mode. For circuit-pack-level problems, see “XXX-BD (Common Port Circuit Pack)”. Port-level maintenance is covered by ADX16A-PT.

EMBEDDED AUDIX consists of 2 circuit packs that occupy 5 slots on a port carrier. The tests described in this manual apply only to switch-side maintenance which tests circuit pack components related to the TDM bus interface. The AUDIX system has an extensive maintenance strategy that is described in *EMBEDDED AUDIX System Maintenance*, 585-300-110.

ADX16D-P (16-Port AUDIX Digital Port)

MO Name (in Alarm Log)	Alarm Level	Initial Command To Run[1]	Full Name of MO
ADX16D-P	MINOR or WARNINGS	test port PCSSpp l	AUDIX Digital Port

1 *UU* is the universal cabinet number (1 for PPN, 2-3 for EPNs). *C* is the carrier designation (A, B, C, D, or E). *SS* is the number of the slot in which the circuit pack resides (01 to 21). *pp* is the two digit port number (01, 02, and so on).

CAUTION:
Never do any of the following without first shutting down AUDIX. Follow the instructions on the TN566/TN2169 faceplate:

- *Remove EMBEDDED AUDIX circuit packs*
- *Cycle power to a carrier containing EMBEDDED AUDIX circuit packs*
- *Remove power to a carrier or cabinet containing EMBEDDED AUDIX circuit pack.*

The ADX16D-P maintenance object represents a port on a TN566/TN2169 EMBEDDED AUDIX circuit pack operating in digital-port (DP) mode. The maintenance strategy for ports on the TN566 operating in control-link mode is described in ADX16A-PT.

The tests described in this section apply only to switch-side maintenance which tests circuit pack components related to the TDM bus interface. The AUDIX system has an extensive maintenance strategy that is described in *EMBEDDED AUDIX System Maintenance*, 585-300-110.

AUDIX resides on a combined pair of circuit packs: the TN566 Multifunction Board (MFB) and the TN2169 Alarm Board (ALB). Because of its size this combination occupies 5 slots, but only 1 slot is functional as far as the system is concerned. The other 4 slots are seen by the switch as “AUDIX-reserved” slots (or ADX16-RES/ADX16D-RS).

In 16 Port DP mode, the TN566 pack supports up to 16 voice ports, each with a primary information channel and a secondary information channel. Ports are administered in increments of two. When a call to a station with an AUDIX login is not answered, AUDIX answers the call using one of the available voice ports.

Unlike other AUDIX systems, EMBEDDED AUDIX is not an adjunct.

Error Log Entries and Test to Clear Values

Table 10-10. EMBEDDED AUDIX Digital Port Error Log Entries

Error Type	Aux Data	Associated Test	Alarm Level	On/Off Board	Test to Clear Value
0[1]	0	Any	Any	Any	test port PCSSpp sh r 1
1(a)	40987	None	WARNING	OFF	
1(b)	1 to 20	None	WARNING	OFF	
15(c)	Any	None			
18(d)	0	busyout port PCSSpp	WARNING	OFF	release port PCSSpp
23(e)	0	None	WARNING	OFF	
130(f)		None	WARNING	ON	test port PCSSpp sh
257(g)	40971	None			
513(h)	Any	None			
1537(i)	40968	None	WARNING	OFF	
1793		Voice and Control Local Loop TEST (#13)	MIN/ WRN[2]	ON	test port PCSSpp l r 3
2049		NPE Crosstalk Test (#9)	MIN/ WRN[2]	ON	test port PCSSpp l r 3
2305(j)	40967	None			
3840(k)	40965	None			
3840(l)	41029	None			

1 Run the Short Test Sequence first. If all tests pass, run the Long Test Sequence. Refer to the appropriate test description and follow the recommended procedures.

2 Minor alarms may be downgraded to Warning alarms based on the values used in the **set options** command.

Notes:

a. The user may experience a noisy port or link. This is an off-board problem that is detected by the port circuit. If this problem exists, replace the circuit pack (see caution at the beginning of this section). Once the problem is resolved, the alarm is retired after a predetermined time.

b. At least 15 off-board problems have been detected with the link to the voice port. When an error with the link is detected, an on-board counter is incremented. Also see Note a, above.

c. This is an internal type error that occurs when an audit request fails.

d. The port is busied-out by command. Release the port with the **release port PCSSpp** command.

e. The circuit pack is administered but not physically installed. The alarm will clear when a circuit pack is inserted.

f. The circuit pack has been removed or has been insane for more than 21 minutes. To clear the error, reseat or replace the AUDIX circuit pack (see caution at the beginning of this section).

g. Something is interfering with transmitting to the voice port. This is usually an on-board problem and can be ignored if no user complaints are received.

h. AUDIX is not available to the switch, possibly due to a busyout on the AUDIX system. Refer to *EMBEDDED AUDIX System Maintenance*, 585-300-110, if necessary.

i. An in-line maintenance error has generated an off-board warning due to some problem with the link to the voice port. This can be ignored if no user complaints are received. If the problem persists, replace the circuit pack (see caution at the beginning of this section). Once the problem is resolved, the alarm is retired after a certain period of time.

j. The link between the circuit pack and the voice port is successfully reset. No craft action is necessary.

k. No voice ports are connected to the EMBEDDED AUDIX circuit pack. No maintenance action is required.

l. The message buffer in the circuit pack is full.

System Technician-Demanded Tests: Descriptions and Error Codes

Always investigate tests in the order presented in the table below. By clearing error codes associated with the *Voice and Control Channel Local Loop Around Test* for example, you may also clear errors generated from other tests in the testing sequence.

Order of Investigation	Short Test Sequence	Long Test Sequence	D/ND[1]
Voice and Control Channel Local Loop Around Test (#13)		X	ND
NPE Crosstalk Test (#9)		X	ND

1 D = Destructive; ND = Nondestructive

NO-OP Tests

The maintenance strategy for EMBEDDED AUDIX emulates the one for DIG-LINE. The tests listed below apply only to DIG-LINE and not to EMBEDDED AUDIX. These tests always return PASS.

- Electronic Power Feed Test (#11)
- Station Lamp Updates Test (#16)
- Station (Digital) Audits Test (#17)
- Digital Terminal Remote Loop Around Test (1201)

NPE Crosstalk Test (#9)

This test verifies that this port's NPE channel talks on the selected time slot and that it never crosses over to time slots reserved for other connections. If the NPE is not working correctly, one-way and noisy connections may be observed. This test is part of a port's Long Test Sequence, and it takes about 20 to 30 seconds to complete.

Crosstalk testing is performed on both the primary information channel (voice) and on the secondary information channel (data) associated with each EMBEDDED AUDIX port. If this test fails on either channel, the voice port is taken out-of-service.

Table 10-11. TEST #9 NPE Crosstalk Test

Error Code	Test Result	Description/Recommendation
1	ABORT	During testing of the primary information channel, system resources may not have been available. Also, the port may have been busy during the test. 1. Check the port status (**display port PCSSpp**) to determine the voice port extension of the port. 2. Use the **status station** command to determine the service state of the port. If the port is in use, it is unavailable for this test. Wait until the port is idle. 3. When the port it idle, retry the command at 1-minute intervals a maximum of 5 times.
2	ABORT	System resources may not have been available, or the port may have been busy during the test. 1. Check if port is being used (**status station**). 2. When the port it idle, retry the command at 1-minute intervals a maximum of 5 times.
1000	ABORT	System resources required to run this test are not available. The port may be in use. 1. Use the **display port PCSSpp** command to determine the voice port extension of the port. 2. Use the **status station** command to determine the service state of the port. If the port is in use, it is unavailable for certain tests. Wait until the port is idle before testing. 3. When the port it idle, retry the command at 1-minute intervals a maximum of 5 times.
1001	ABORT	System resources required to run this test are not available. Try (a)
1002	ABORT	The system could not allocate time slots for the test. The system may be under heavy traffic conditions, or it may have time slots out-of-service due to TDM-BUS errors. Refer to “TDM-BUS” to diagnose TDM-BUS errors. 1. If system has no TDM-BUS errors, and if it is not handling heavy traffic, retry the command at 1-minute intervals a maximum of 5 times.

Continued on next page

Table 10-11. TEST #9 NPE Crosstalk Test — *Continued*

Error Code	Test Result	Description/Recommendation
1003	ABORT	The system could not allocate a tone receiver for the test. The system may be oversized for the number of tone detectors present, or some tone detectors may be out-of-service. 1. Resolve any “TTR-LEV” errors in the Error Log. 2. Resolve any “TONE-PT” errors in the Error Log.
1004	ABORT	The port was put in use during the test. The test has been aborted. 1. Use the **display port PCSSpp** command to determine the voice port extension of the port. 2. Use the **status station** command to determine the service state of the port. If the port is in use, it is unavailable for certain tests. Wait until the port is idle before testing. 3. When the port it idle, retry the command at 1-minute intervals a maximum of 5 times.
1020	ABORT	Test disabled via background testing. 1. Use the **status station** command to determine when the voice port is available for testing. 2. When the port it idle, retry the command at 1-minute intervals a maximum of 5 times.
2000	ABORT	Response to the test request was not received within the allowable time period. 1. Retry the command at 1-minute intervals a maximum of 5 times.
1 2	FAIL	The NPE of the tested port was found to be transmitting in error. This causes noisy and unreliable connections. Failure code 1 indicates that the Crosstalk test failed on the primary channel. Failure code 2 indicates that the Crosstalk test failed on the secondary channel. 1. Replace the circuit pack (see caution at the beginning of this section).
	PASS	The port is using its allocated time slots correctly. 1. To be sure that this is not an intermittent problem, repeat this test up to a maximum of 10 times to make sure it continues to pass. 2. If complaints still exist, examine the connections.

Voice and Control Channel Local Loop Test (#13)

This test checks the information and control channels between the Switch Processing Element (SPE) and the EMBEDDED AUDIX port circuit. The SPE sends a message to loop around both the information and control channels for the port. First, the primary information (voice) channel loop back test is run.

While the primary information channel is still looped around, the Control Channel Loop Around Test is performed. The Loop Around Test for the secondary information (data) channel is then performed. This test is the same as the primary information channel loop around test.

Next, a Conference Test is implemented for the primary information channel. This test is the same as Conference Test #6.

Only one value (Pass, Fail, or Abort) is generated as a result of the four tests run. If any test fails or aborts, the sequence is stopped.

Table 10-12. TEST #13 Voice and Control Channel Local Loop Test

Error Code	Test Result	Description/Recommendation
	ABORT	Internal System Error 1. When the port it idle, retry the command at 1-minute intervals a maximum of 5 times.
1000	ABORT	System resources required to run this test are not available. The port may be in use. 1. Use the **display port PCSSpp** command to determine the voice port extension of the port. 2. Use the **status station** command to determine the service state of the port. If the port is in use, it is unavailable for certain tests. 3. When the port it idle, retry the command at 1-minute intervals a maximum of 5 times.
1001	ABORT	System resources required to run this test are not available. 1. When the port it idle, retry the command at 1-minute intervals a maximum of 5 times.

Continued on next page

Table 10-12. TEST #13 Voice and Control Channel Local Loop Test — *Continued*

Error Code	Test Result	Description/Recommendation
1002	ABORT	The system could not allocate time slots for the test. The system may be under heavy traffic conditions, or it may have time slots that are out-of-service due to TDM-BUS errors. Refer to “TDM-BUS” to diagnose TDM-BUS errors. 1. If the system has no TDM-BUS errors and if it is not handling heavy traffic, retry the command at 1-minute intervals a maximum of 5 times.
1003	ABORT	The system could not allocate a tone receiver for the test. The system may be oversized for the number of tone detectors present, or some tone detectors may be out-of-service. 1. Resolve any “TTR-LEV” errors. 2. Resolve any “TONE-PT” errors. Try (a).
1004	ABORT	The port was put in use during the test. The test has been aborted. 1. Use the **display port PCSSpp** to determine the voice port extension of the port. 2. Use the **status station** command to determine the service state of the port. If the port is in use, it is unavailable for certain tests. Wait until the port is idle before retesting. 3. When the port it idle, retry the command at 1-minute intervals a maximum of 5 times.
2000	ABORT	Response to the test request was not received within the allowable time period.
2100	ABORT	Could not allocate the necessary system resources for this test. 1. Retry the command at 1-minute intervals a maximum of 5 times.

Continued on next page

Table 10-12. TEST #13 Voice and Control Channel Local Loop Test — *Continued*

Error Code	Test Result	Description/Recommendation
7	FAIL	Conference Test failed on the primary channel. In some cases, users may not notice a disruption in service. In extreme cases, the conferencing feature may not work at all.
14	FAIL	The primary voice channel is not transmitting properly. User impact may range from no noticeable effect to loss of use of this port.
15	FAIL	The control channel between the processor and AUDIX is not transmitting properly. User impact may range from no noticeable effect to loss of use of this port. This failure could also be disruptive to other users.
16	FAIL	The secondary voice channel is not transmitting properly. User impact may range from no noticeable effect to loss of use of this port.
None	FAIL	The test failed for reasons external to the AUDIX. 1. Run circuit pack tests to check the tone generator circuit pack and the tone detector circuit pack by using the **test board PCSS s** command. 2. Resolve any problems detected on the tone generator circuit pack or tone detector circuit pack. 3. If the tone generator and tone detector circuit packs are functioning properly, and if the test still fails, replace the AUDIX (see caution at the beginning of this section).
	PASS	Voice and Control Channel Local Loop test passed. All channels are transmitting properly. 1. To be sure that this is not an intermittent problem, repeat this test up to 10 times and see if it continues to pass. 2. If complaints still exist, examine the connections.

ADX16A-PT (AUDIX Analog Line/Control Link)

MO Name (in Alarm Log)	Alarm Level	Initial Command To Run[1]	Full Name of MO
ADXCL-PT or ADX16A-PT	MINOR	test port PCSSpp l	AUDIX Analog Line/ Control Link
ADXCL-PT or ADX16A-PT	WARNING	test port PCSSpp sh	AUDIX Analog Line/ Control Link

1 *UU* is the universal cabinet number (1 for PPN, 2 - 3 for EPNs). *C* is the carrier designation (A, B, C, D, or E). *SS* is the number of the slot in which the circuit pack resides (01 to 21). *pp* is the two digit port number (01, 02,...).

CAUTION:
Never do any of the following without first shutting down AUDIX. Follow the instructions on the TN566/TN2169 faceplate:

- *Remove EMBEDDED AUDIX circuit packs*
- *Cycle power to a carrier containing EMBEDDED AUDIX circuit packs*
- *Remove power to a carrier containing EMBEDDED AUDIX circuit packs*

The ADX16A-PT maintenance object represents a port on a TN566/TN2169 EMBEDDED AUDIX circuit pack that is operating in control-link (CL) mode. For circuit-pack-level problems (ADX16A-BD or ANL-16-BD), see “XXX-BD (Common Port Circuit Pack)”. For port-level problems with AUDIX operating in digital-port mode, see ADXDP-PT/ADX8D-PT.

The tests described in this section apply only to switch-side maintenance which tests circuit pack components related to the TDM bus interface. The AUDIX system has an extensive maintenance strategy that is described in *EMBEDDED AUDIX System Maintenance*, 585-300-110.

AUDIX resides on a combined pair of circuit packs: the TN566 Multifunction Board (MFB) and the TN2169 Alarm Board (ALB). Because of its size this combination occupies 5 slots, but only 1 slot is functional as far as the switch is concerned. The other 4 slots are seen by the switch as “AUDIX-reserved” slots.

In CL mode the TN566 pack supports up to 16 voice ports. When a call to a station with an AUDIX login is not answered, AUDIX answers the call using one of the available voice ports.

Unlike other AUDIX systems, EMBEDDED AUDIX is not an adjunct.

Error Log Entries and Test to Clear Values

Table 10-13. EMBEDDED AUDIX Analog Line/Control Link Error Log Entries

Error Type	Aux Data	Associated Test	Alarm Level	On/Off Board	Test to Clear Value
0[1]	0	Any	Any	Any	test port PCSSpp sh r 1
1(a)	40977	None			
18	0	busyout station <*extension*>	WRN	ON	release station *extension*
23(b)	0	None	WRN	OFF	
130(c)		None	WRN	ON	test port PCSSpp sh
257(d)	40973	None			
513(e)	Any	None			
1025(f)		Loop Around Test (#161)	MIN/ WRN[2]	ON	test port *PCSSpp* l r 2
1281		Conference Test (#7)	MIN/ WRN[2]	ON	test port *PCSSpp* l r 2
1537		NPE Crosstalk Test (#6)	MIN/ WRN[2]	ON	test port *PCSSpp* l r 2

1 Run the Short Test Sequence first. If all tests pass, run the Long Test Sequence. Refer to the appropriate test description and follow the recommended procedures.

2 Minor alarms on this MO may be downgraded to Warning alarms based on the values used in the **set options** command.

Notes:

a. This is an in-line error and can only be resolved over time. This indicates that no terminal equipment was present when ringing was attempted. Execute the short **test port PCSSpp** command.

b. The circuit pack has been logically administered but not physically installed. The alarm will be cleared when the circuit pack is installed.

c. The circuit pack has been removed or has been insane for more than 11 minutes. To clear the error, reseat or replace the circuit pack.

d. This is an in-line error and can only be resolved over time. This error indicates that ringing voltage is absent. If only one analog circuit pack in the system has this problem, then replace the circuit pack. If only analog circuit packs on a particular carrier have this error, then the ringing generator may not be connected to this carrier. If analog circuit packs on many carriers have this error, check the ringing generator.

e. AUDIX is not available to the switch. Check the AUDIX system, referring to *EMBEDDED AUDIX System Maintenance*, 585-300-110.

f. The TDM bus is out of service. See the “TDM-BUS” section.

System Technician-Demanded Tests: Descriptions and Error Codes

Always investigate tests in the order presented in the table below. By clearing error codes associated with the *Loop Around Test #161* for example, you may also clear errors generated from other tests in the testing sequence.

Order of Investigation	Short Test Sequence	Long Test Sequence	D/ND[1]
Loop Around Test (#161)		X	ND
Conference Test (#7)		X	ND
NPE Crosstalk Test (#6)		X	ND

1 D = Destructive; ND = Nondestructive

NO-OP Tests

The maintenance strategy for EMBEDDED AUDIX emulates the one for ANL-16-L. The tests listed below apply only to ANL-16-L and not to EMBEDDED AUDIX. These tests always return PASS.

- Battery Feed Test (#35)
- Audits and Updates Test (#36)
- Station Present Test (#48)

Tests 36 and 48 ABORT when AUDIX is not running.

NPE Crosstalk Test (#6)

This test verifies that this port's NPE channel talks on the selected time slot and never crosses over to time slots reserved for other connections. If the NPE is not working correctly, one-way and noisy connections may be observed. This test is part of the long test sequence and takes about 25 seconds to complete.

Table 10-14. TEST #6 NPE Crosstalk Test

Error Code	Test Result	Description/Recommendation
	ABORT	Could not allocate the necessary system resources for this test. Try (a).
1000	ABORT	System resources required to run this test are not available. The port may be busy with a valid call. 1. Use the **display port PCSSpp** command to determine the station extension. 2. Use the **status station** command to determine the service state of the port. If the port is in use, it is unavailable for certain tests. Wait until the port is idle before testing. 3. When the port is idle, retry the command at 1-minute intervals a maximum of 5 times.
1001	ABORT	Could not allocate the necessary system resources to run this test. Try (a).
1002	ABORT	The system could not allocate time slots for the test. The system may be under heavy traffic conditions or it may have time slots out-of-service due to TDM-BUS errors. Refer to TDM-BUS Maintenance documentation to diagnose any active TDM-BUS errors. 1. If system has no TDM-BUS errors and is not handling heavy traffic, retry the command at 1-minute intervals a maximum of 5 times.
1003	ABORT	The system could not allocate a tone receiver for the test. The system may be oversized for the number of tone detectors present or some tone detectors may be out-of-service. 1. Resolve any “TTR-LEV” errors. 2. Resolve any “TONE-PT” errors. 3. Retry the command at 1-minute intervals a maximum of 5 times.

Continued on next page

Table 10-14. TEST #6 NPE Crosstalk Test — *Continued*

Error Code	Test Result	Description/Recommendation
1004	ABORT	The port was seized by a valid call during the test. The test has been aborted. 1. Use the **display port PCSSpp** command to determine the station extension. 2. Use the **status station** command to determine the service state of the port. If the port is in use, it is unavailable for certain tests. Wait until the port is idle before testing. 3. When the port it idle, retry the command at 1-minute intervals a maximum of 5 times.
1005	ABORT	This condition indicates that the test is not applicable when the analog port is used in a combined modem pool. This error can be ignored.
1018	ABORT	Test disabled via administration. 1. To enable the test for the particular analog station being tested, enter the **change station <extension>** command and change the “Test?” field on the Station Form from “n” to “y.”
2000	ABORT	Response to the test request was not received within the allowable time period.
2012	ABORT	System could not respond to this request.
2100	ABORT	Could not allocate the necessary system resources for this test. 1. Retry the command at 1-minute intervals a maximum of 5 times.
Any	FAIL	The NPE of the tested port was found to be transmitting in error. This causes noisy and unreliable connections. 1. Replace the circuit pack.
	PASS	The port is correctly using its allocated time slots. User-reported troubles on this port should be investigated by using other port tests, by examining station wiring, or by examining the station.

Conference Circuit Test (#7)

This test verifies that the NPE channel for the port being tested can correctly perform the conferencing function.

Table 10-15. TEST #7 Conference Circuit Test

Error Code	Test Result	Description/Recommendation
	ABORT	Could not allocate the necessary system resources to run this test. (a)
1000	ABORT	System resources required to run test are not available. The port may be busy with a valid call. 1. Use the **display port PCSSpp** command to determine the station extension. 2. Use the **status station** command to determine the service state of the port. If the port is in use, wait until it is idle before retesting. 3. When the port is idle, retry the command at 1-minute intervals a maximum of 5 times.
1004	ABORT	The port was seized by a valid call during the test. The test has been aborted. 1. Use the **display port PCSSpp** command to determine the station extension. 2. Use the **status station** command to determine the service state of the port. If the port is in use, wait until it is idle before testing. 3. When the port is idle, retry the command at 1-minute intervals a maximum of 5 times.
1018	ABORT	Test disabled by administration. This only applies to analog stations. 1. To enable the test for the analog station being tested, enter the **change station <extension>** command and change the `Test?` field on the Station Form from `n` to **y**.
2000	ABORT	Response to the test request was not received within the allowable time period.

Continued on next page

Table 10-15. TEST #7 Conference Circuit Test — *Continued*

Error Code	Test Result	Description/Recommendation
2100	ABORT	Could not allocate the necessary system resources for this test. 1. Retry the command at 1-minute intervals a maximum of 5 times.
Any	FAIL	The NPE of the tested port did not conference the tones correctly. This causes noisy and unreliable connections. 1. Replace the circuit pack.
	PASS	The port can correctly conference multiple connections. User-reported troubles on this port should be investigated by using other port tests and by examining station, trunk, or external wiring.

Loop Around Test (#161)

This test is designed to check the on-board transmission capabilities of the NPE on the analog port.

Table 10-16. TEST #161 Loop Around Test

Error Code	Test Result	Description/Recommendation
	ABORT	Could not allocate the necessary system resources for this test. Try (a).
1000	ABORT	System resources required to run this test are not available. The port may be busy with a valid call. 1. Use the **display port PCSSpp** command to determine the station extension. 2. Use the **status station** command to determine the service state of the port. If the port is in use, wait until it is idle before testing. 3. When the port is idle, retry the command at 1-minute intervals a maximum of 5 times.
1002	ABORT	The system could not allocate time slots for the test. The system may be under heavy traffic conditions or it may have time slots out-of-service due to TDM-BUS errors. Refer to “TDM-BUS” to diagnose TDM-BUS errors. 1. If system has no TDM-BUS errors and is not handling heavy traffic, retry the command at 1-minute intervals a maximum of 5 times.
1003	ABORT	The system could not allocate a tone receiver for the test. The system may be oversized for the number of tone detectors present or some tone detectors may be out-of-service. 1. Resolve any “TTR-LEV” errors. 2. Resolve any “TONE-PT” errors. 3. If neither condition exists, retry the command at 1-minute intervals a maximum of 5 times.
1004	ABORT	The port was seized by a valid call during the test. The test has been aborted. 1. Use the **display port PCSSpp** command to determine the station extension. 2. Use the **status station** command to determine the service state of the port. If the port is in use, wait until the port is idle before testing. 3. When the port is idle, retry the command at 1-minute intervals a maximum of 5 times.

Continued on next page

Table 10-16. TEST #161 Loop Around Test — *Continued*

Error Code	Test Result	Description/Recommendation
1018	ABORT	Test disabled by administration. To enable the test for the particular analog station being tested, enter the **change station <extension>** command and change the `Test?` field on the Station Form from `n` to **y**.
2000	ABORT	Response to the test request was not received within the allowable time period.
2100	ABORT	Could not allocate the necessary system resources for this test. 1. Retry the command at 1-minute intervals a maximum of 5 times.
	FAIL	The reflective Loop Around Test failed. This causes noisy or unreliable connections or other users calling this port may hear an echo. 1. Replace the circuit pack.
	PASS	The port is able to provide an analog transmission path to the station equipment. User-reported troubles on this port should be investigated by using other port tests, by examining station wiring, or by examining the station.

ALARM-PT (ALARM PORT)

MO Name (in Alarm Log)	Alarm Level	Initial Command to Run[1]	Full Name of MO
ALARM-PT	MIN	test port PCSSpp l	Alarm-Port
ALARM-PT	WRN	test port PCSSpp sh	Alarm-Port

1 Where P is the port network number (1 for PPN and 2 or 3 for EPN); C is the carrier designation (for example, A, B, C, D, or E); SS is the address of the slot in the carrier where the circuit pack is located (for example, 01, 02,...,etc.); and pp is the 2-digit port number (for example, 01).

The Alarm Port Maintenance Object provides on-board maintenance for an analog line port that is administered as an external device alarm port. Tests are provided to verify the analog line port's ability to detect an external device alarm. The External Device Alarm (EXT-DEV) Maintenance Object is used for the off-board external device alarm.

ANL-24-L (24-Port Analog Line)

MO Name (in Alarm Log)	Alarm Level	Initial Command to Run[1]	Full Name of MO
ANL-24-L	MIN	test port PCSSpp l	24-Port Analog Line
ANL-24-L	WRN	test port PCSSpp sh	24-Port Analog Line

1 Where P is the port network number (1 for PPN); C is the carrier designation (for example, A, B, or C); SS is the address of the slot in the carrier where the circuit pack is located (for example, 01, 02, etc.); and pp is the 2-digit port number (for example, 01).

The 24-Port Analog Line circuit pack (TN793) provides 24 ports for voice terminals and supports both on-premises and off-premises analog voice terminals.

No maintenance of the terminal connected to the 24-Port Neon Analog Line circuit pack is performed, except to determine whether or not the terminal is connected. Failures of the neon message waiting lamp power and the common ringing application circuitry are reported as part of common port circuit pack errors. See errors 1281 and 1793 in the “XXX-BD (Common Port Circuit Pack)” section.

NOTE:
This analog line circuit pack supports analog data modules. When assigned, analog data modules provide access to the NetPkt (TN2401/TN794) data ports. To activate an analog data module you must assign the port location on the data form and connect a modem to the port. (The analog data module may be used for connection to a CDR output or other adjuncts as needed.) These ports are tested the same as all other analog ports on the circuit pack.

Ringing Caused by Maintenance Testing

Test #48 may cause some terminal equipment to ring briefly during daily maintenance. If this ringing is disturbing the customer or the terminal equipment, it should be disabled in the `Tests` field of the **change station** extension form. Be aware that this action also disables Tests #6, 7, 161, and 35.

Error Log Entries and Test to Clear Values

Table 10-17. 24-Port Analog Line Error Log Entries

Error Type	Aux Data	Associated Test	Alarm Level	On/Off Board	Test to Clear Value
0[1]	0	Any	Any	Any	test port PCSSpp sh r 1
1(a)	40960 40975 40977	none			
15(b)	Any	Audits and Updates Test (#36)			
18	0	busy-out station *extension*	WRN	ON	release station *<extension>*
130(c)		None	WRN	ON	test port PCSSpp sh
257(d)	40973	none			
513(e)		Station Present Test (#48)	WRN	OFF	test port PCSSpp sh r 2
769		Battery Feed Test (#35)	MIN/ WRN[2]	ON	test port PCSSpp sh r 2
1025		Looparound Test (#161)	MIN/ WRN[2]	ON	test port PCSSpp l r 2
1281		Conference Test (#7)	MIN/ WRN[2]	ON	test port PCSSpp l r 2
1537		NPE Crosstalk Test (#6)	MIN/ WRN[2]	ON	test port PCSSpp l r 2

1 Run the Short Test Sequence first. If all tests pass, run the Long Test Sequence. Refer to the appropriate test description and follow the recommended procedures.

2 Minor alarms on this MO may be downgraded to Warning alarms based on the values used in the **set options** command.

Notes:

a. Error Type 1: These are in-line errors and can only be resolved over time.

- 40960 indicates that too many simultaneous incoming ringing attempts were made on this board. Only 4 ports on a board may ring simultaneously. A 5th incoming call will cause an inline error from the board.

- 40975 indicates that the terminal equipment was on-hook when ring-tip was detected during ringing. This usually indicates a failure in the terminal equipment or the type of terminal has a low ringer impedance. Call the terminal equipment and verify that the terminal rings. If the terminal does not ring, then replace it. Otherwise, use **test port PCSSpp** and follow the procedure for Test #48.
- 40977 indicates that no terminal equipment was connected when ringing was attempted. Run the short test via the **test port PCSSpp** command, and follow the procedure for the results of Test #48.

b. This is a software audit error that does not indicate any hardware malfunction. Run Short Test Sequence and investigate associated errors.

c. This error type indicates that the circuit pack has been removed or has been insane for more than 11-minutes. To clear the error, reseat or replace the circuit pack.

d. This is an in-line error and can only be resolved over time. This error indicates that ringing voltage is absent. If only 1 analog circuit pack in the system has this problem, then replace the circuit pack. If only analog circuit packs on a particular carrier have this error, then the ringing generator may not be connected to this carrier. If analog circuit packs on many carriers have this error, then it is probably a problem with the ringing generator.

e. Test #48 may cause some terminal equipment to ring briefly during daily maintenance. If this disturbs the customer or the terminal equipment, disable it by setting the `Tests` field on the **change station** extension form to `n`. On some software releases, this will also disable Tests #6, 7, 161, and 35.

System Technician-Demanded Tests: Descriptions and Error Codes

Investigate tests in the order presented in the table below when inspecting errors. By clearing error codes associated with the *Battery Feed Test,* for example, you may also clear errors generated from other tests in the testing sequence.

Order of Investigation	Short Test Sequence	Long Test Sequence	D/ ND[1]
Battery Feed Test (#35)	X	X	ND
Station Present Test (#48)	X	X	ND
Looparound Test (#161)		X	ND
Conference Test (#7)		X	ND
NPE Crosstalk Test (#6)		X	ND
Station Status and Translation Audits and Updates Test (#36)	X	X	ND

1 D = Destructive; ND = Nondestructive

NPE Crosstalk Test (#6)

This test verifies that this port's NPE channel talks on the selected time slot and never crosses over to time slots reserved for other connections. If the NPE is not working correctly, one-way and noisy connections may be observed. This test is usually part of the long test sequence and takes about 20 to 30 seconds to complete.

Table 10-18. TEST #6 NPE Crosstalk Test

Error Code	Test Result	Description/Recommendation
	ABORT	Could not allocate the necessary system resources to run this test. 1. Retry the command at 1-minute intervals a maximum of 5 times.
1000	ABORT	System resources required to run test are not available. The port may be busy with a valid call. This result is also reported for the system's Music-On-Hold port when it is off-hook, which it usually is. 1. Enter **display port PCSSpp** to determine the station's extension. 2. Enter **status station** extension to determine the service state of the port. If the port is in use, wait until the port is idle. 3. Retry the command at 1-minute intervals a maximum of 5 times.
1001	ABORT	System resources required to run test are not available. This could be due to a failure to seize the port. 1. Retry the command at 1-minute intervals a maximum of 5 times.
1002	ABORT	The system could not allocate time slots for the test. The system may be under heavy traffic conditions or have time slots out-of-service due to TDM-BUS errors. Refer to "TDM-BUS" to diagnose any active TDM-BUS errors. 1. If system has no TDM-BUS errors and is not handling heavy traffic, retry the command at 1-minute intervals a maximum of 5 times.

Continued on next page

Table 10-18. TEST #6 NPE Crosstalk Test — *Continued*

Error Code	Test Result	Description/Recommendation
1003	ABORT	The system could not allocate a tone receiver for the test. The system may be oversized for the number of tone detectors present or some tone detectors may be out-of-service. 1. Look for TTR-LEV errors in the Error Log. If present, refer to “TTR-LEV”. 2. Look for TONE-PT errors in the Error Log. If present, refer to “TONE-PT”. 3. Retry the command at 1-minute intervals a maximum of 5 times.
1004	ABORT	The port was seized by a valid call during the test. The test has been aborted. Use the **display port PCSSpp** command to determine the station extension. Use the **status station** command to determine the service state of the port. If the port is in use, wait until the port is idle before testing. 1. Retry the command at 1-minute intervals a maximum of 5 times.
1005	ABORT	The test was aborted due to a configuration problem. This test may not be applicable, or it may be disruptive to terminal equipment other than a voice terminal (for example, the modem pool member or Music On Hold).
1018	ABORT	The test has been disabled by administration. The default for the `Test` field on the station form is **y**. Determine why this field has been set to `n` on this station (this may be due to the ringing application test 48, that can be customer or terminal disturbing). 1. To enable the test for a particular station being tested, enter **change station extension** and set the `Test?` field on the station from `n` to **y**.
2000	ABORT	Response to the test request was not received within the allowable time period.
2100	ABORT	System resources required to run test are not available. This could be due to a failure to seize the port. 1. Retry the command at 1-minute intervals a maximum of 5 times.

Continued on next page

Table 10-18. TEST #6 NPE Crosstalk Test — *Continued*

Error Code	Test Result	Description/Recommendation
Any	FAIL	This test can fail due to on-board or off-board problems. Off-board problems include EXP-PN and EXP-INTF faults, TDM-BUS faults, and faults associated with the tone detectors/tone generators. Clear all off-board problems before replacing the board. A TDM-BUS problem is usually the result of a faulty board connected to the backplane, or bent pins on the backplane. 1. Look for EXP-PN and/or EXP-INTF errors in the error log. If present, refer to “EXP-PN” and “EXP-INTF”. 2. Look for TDM-BUS errors in the error log. If present, refer to “TDM-BUS”. 3. Look for TONE-BD and/or TONE-PT errors in the error log. If present, refer to “TONE-BD” and “TONE-PT”. 4. Test the board when the faults from Steps 1, 2, and 3 are cleared. Replace the board only if the test fails.
	PASS	The port is correctly using its allocated time slots. User-reported troubles on this port should be investigated by using other port tests, by examining station wiring, or by examining the station.
0	NO BOARD	The test could not relate the internal ID to the port (no board). This could be due to incorrect translations, no board is inserted, an incorrect board is inserted, or an insane board is inserted. 1. Check to ensure that the board translations are correct. Use the **list config** command, and resolve any problems. 2. If the board was found to be correctly inserted in step 1, issue the **busyout board** command. 3. Issue the **reset board** command. 4. Issue the **release busy board** command. 5. Issue the **test board long** command. This should re-establish the linkage between the internal ID and the port. If this is not the case, check to ensure that there is a valid board inserted.

Conference Circuit Test (#7)

This test verifies that the NPE channel for the port being tested can correctly perform the conferencing function.

Table 10-19. TEST #7 Conference Circuit Test

Error Code	Test Result	Description/Recommendation
	ABORT	Could not allocate the necessary system resources to run this test. 1. Retry the command at 1-minute intervals a maximum of 5 times.
1000	ABORT	System resources required to run this test are not available. The port may be busy with a valid call. This result is also reported for the system's Music-On-Hold port when it is off-hook, which it usually is. 1. Enter **display port PCSSpp** to determine the station's extension. 2. Enter **status station** extension to determine the service state of the port. 3. If the port is in use, wait until the port is idle and retry the command at 1-minute intervals a maximum of 5 times.
1004	ABORT	The port was seized by a valid call during the test. The test has been aborted. 1. Use the **display port PCSSpp** command to determine the station extension. 2. Use the **status station** command to determine the service state of the port. 3. If the port is in use, wait until the port is idle and retry the command at 1-minute intervals a maximum of 5 times.
1005	ABORT	The test was aborted due to a configuration problem. This test may not be applicable, or it may be disruptive to terminal equipment other than a voice terminal (for example, the modem pool member or Music On Hold).
1018	ABORT	The test has been disabled via administration. The default for the `Test` field on the station form is **y**. Determine why this field has been set to `n` on this station (this may be due to the ringing application test 48, that can be customer or terminal disturbing). 1. To enable the test for a particular station being tested, enter **change station extension** and set the `Test?` field on the station from `n` to **y**.

Continued on next page

Table 10-19. TEST #7 Conference Circuit Test — *Continued*

Error Code	Test Result	Description/Recommendation
2000	ABORT	Response to the test request was not received within the allowable time period.
2100	ABORT	System resources required to run this test are not available. 1. Look for TONE-PT errors in the error log. If present, refer to “TONE-PT”. 2. If there are no TONE-PT errors in the error log, retry the command at 1-minute intervals a maximum of 5 times.
Any	FAIL	The NPE of the tested port did not conference the tones correctly. This will cause noisy and unreliable connections. 1. Issue the **display port** and the **status station** commands to determine if the station is idle. If the station is idle, issue the **test port** command for this port. 2. If the test continues to fail, issue the **busyout port** and the **release port** commands, and then retest. 3. If the test still fails, replace the board.
	PASS	The port can correctly conference multiple connections. User-reported troubles on this port should be investigated by using other port tests and by examining station, trunk, or external wiring.
0	NO BOARD	The test could not relate the internal ID to the port (no board). This could be due to incorrect translations, no board is inserted, an incorrect board is inserted, or an insane board is inserted. 1. Check to ensure that the board translations are correct. Use the **list config** command, and resolve any problems. 2. If the board was found to be correctly inserted in step 1, issue the **busyout board** command. 3. Issue the **reset board** command. 4. Issue the **release busy board** command. 5. Issue the **test board long** command. This should re-establish the linkage between the internal ID and the port. If this is not the case, check to ensure that there is a valid board inserted.

Battery Feed Test (also called Port Diagnostic Test) (#35)

The battery feed chip provides power to the telephone equipment, signaling, rotary dial pulsing, transmission, and balance. This test checks the signaling and switchhook capabilities of the battery feed chip by terminating the port, applying battery and detecting the resulting current.

For the TN746B, Test #35 does not actually run and instead always returns PASS. Test #35 operates in the normal manner for TN746.

Table 10-20. TEST #35 Battery Feed Test

Error Code	Test Result	Description/Recommendation
	ABORT	Could not allocate the necessary system resources to run this test. 1. Retry the command at 1-minute intervals a maximum of 5 times.
1000	ABORT	System resources required to run this test are not available. The port may be busy with a valid call. This result is also reported for the system's Music-On-Hold port when it is off-hook, which it usually is.
1004	ABORT	The port was seized by a valid call during the test. The test has been aborted. 1. Use the **display port PCSSpp** command to determine the station extension. 2. Use the **status station** command to determine the service state of the port. 3. If the port is in use, wait until the port is idle and retry the command at 1-minute intervals a maximum of 5 times.
1005	ABORT	The test was aborted due to a configuration problem. This test may not be applicable, or it may be disruptive to terminal equipment other than a voice terminal (for example, the modem pool member or Music On Hold).
1018	ABORT	The test has been disabled via administration. The default for the `Test` field on the station form is **y**. Determine why this field has been set to `n` on this station (this may be due to the ringing application test 48, that can be customer or terminal disturbing). 1. To enable the test for a particular station being tested, enter **change station extension** and set the `Test?` field on the station from `n` to **y**.

Continued on next page

Table 10-20. TEST #35 Battery Feed Test — *Continued*

Error Code	Test Result	Description/Recommendation
1392	ABORT	This port is currently a TTI port and the test will not execute on it. 1. Verify that the port is a TTI port using either the **display port** command (the display shows that the port is a TTI port) or the **list config** command (the display shows a `t` for the port). 2. If the port is *not* a TTI port, escalate the problem. If both commands indicate that the port is a TTI port, the abort is correct for the test, and no action is necessary.
2000	ABORT	Response to the test request was not received within the allowable time period.
2100	ABORT	Could not allocate the necessary system resources to run this test. 1. Retry the command at 1-minute intervals a maximum of 5 times.
	FAIL	The port's battery feed chip is unable to supply sufficient power to the terminal equipment. This could be a marginal test, and the terminal equipment may be operating satisfactorily. 1. Retry the command at 1-minute intervals a maximum of 5 times. 2. If the test continues to fail, determine whether the customer is experiencing problems on this line. If so, replace the circuit pack.

Continued on next page

Table 10-20. TEST #35 Battery Feed Test — *Continued*

Error Code	Test Result	Description/Recommendation
	PASS	The port's battery feed chip is able to provide power to the station equipment to detect on-/off-hook, but may not be able to supply power for touch-tones. If touch-tones are inoperative on this station, then replace the circuit pack because this port is inoperative. User-reported troubles on this port should be investigated by using other port tests, by examining station wiring, or by examining the station.
0	NO BOARD	The test could not relate the internal ID to the port (no board). This could be due to incorrect translations, no board is inserted, an incorrect board is inserted, or an insane board is inserted. 1. Check to ensure that the board translations are correct. Use the **list config** command, and resolve any problems. 2. If the board was found to be correctly inserted in step 1, issue the **busyout board** command. 3. Issue the **reset board** command. 4. Issue the **release busy board** command. 5. Issue the **test board long** command. This should re-establish the linkage between the internal ID and the port. If this is not the case, check to ensure that there is a valid board inserted.

Station Status and Translation Audits and Updates Test (#36)

This test updates the analog port's message lamp state (if it has one) and translations with information in the software.

Table 10-21. Test #36 Station Status and Translation Audits and Updates

Error Code	Test Result	Description/Recommendation
	ABORT	Could not allocate the necessary system resources to run this test. 1. Retry the command at 1-minute intervals a maximum of 5 times.
1004	ABORT	The port was seized by a valid call during the test. The test has been aborted. 1. Use the **display port PCSSpp** command to determine the station extension. 2. Use the **status station** command to determine the service state of the port. 3. If the port is in use, wait until port is idle and retry the command at 1-minute intervals a maximum of 5 times.
1005	ABORT	The test was aborted due to a configuration problem. This test may not be applicable, or it may be disruptive to terminal equipment other than a voice terminal (for example, the modem pool member or Music On Hold).
1006	ABORT	This port has been busied out by command, or taken out-of-service by the failure of the NPE Crosstalk Test. 1. Look in the Error Log for error type 18 (port busied out) for this port. If this error is present, release the port with the **release station extension** command, and run the test again. 2. Check the Error Log for error type 1025 (NPE crosstalk test failed) for this port. If this error is present, investigate the errors associated with the NPE Crosstalk Test #6. 3. Make sure that the terminal is connected and in service, and then retest.
2000	ABORT	Response to the test request was not received within the allowable time period.
2100	ABORT	Could not allocate the necessary system resources to run this test. 1. Retry the command at 1-minute intervals a maximum of 5 times.

Continued on next page

Table 10-21. Test #36 Station Status and Translation Audits and Updates — *Continued*

Error Code	Test Result	Description/Recommendation
1	FAIL	This does not indicate a hardware problem. The switchhook audit failed. The other updates were not performed because of this failure. This may occur when the audit is performed at the same time the terminal equipment goes off-hook. 1. Use the **status station** command to determine when the port is available and retry the command at 1-minute intervals a maximum of 5 times.
5	FAIL	This may be an internal software error. The message waiting lamp update failed. The translation and ringer updates were not performed because of this failure.
7	FAIL	The translation update failed. There may be an internal software error. The ringer update was not performed because of this failure.
8	FAIL	This does not indicate a hardware problem. There may be an internal software error. The ringer update failed. 1. Retry the command at 1-minute intervals a maximum of 5 times.
	PASS	The software and the port processor have the same status. User-reported troubles on this port should be investigated by using other port tests, by examining station wiring, or by examining the station.
0	NO BOARD	The test could not relate the internal ID to the port (no board). This could be due to incorrect translations, no board is inserted, an incorrect board is inserted, or an insane board is inserted. 1. Check to ensure the board translations are correct. Use the **list config** command and resolve problems. 2. If the board was found to be correctly inserted in step 1, issue the **busyout board** command. 3. Issue the **reset board** command. 4. Issue the **release busy board** command. 5. Issue the **test board long** command. This should re-establish the linkage between the internal ID and the port. If this is not the case, check to ensure that there is a valid board inserted.

Station Present Test (also called Ringing Application Test) (#48)

This test applies momentary ringing voltage to the terminal equipment and monitors resulting current flow to determine whether terminal equipment is connected to the port. This test may cause some terminal equipment to ring briefly during daily maintenance. If this ringing disturbs the customer or the terminal equipment, you can disable it via the Tests field on the **change station** form. However, on some software releases, Tests #6, 7, 161, and 35 are disabled.

Table 10-22. TEST #48 Station Present Test

Error Code	Test Result	Description/Recommendation
	ABORT	Could not allocate the necessary system resources to run this test. 1. Retry the command at 1-minute intervals a maximum of 5 times.
1000	ABORT	System resources required to run this test are not available. The port may be busy with a valid call.
1004	ABORT	The port was seized by a valid call during the test. The test has been aborted. 1. Use the **display port PCSSpp** command to determine the station extension. 2. Use the **status station** command to determine the service state of the port. 3. If the port is in use, wait until the port is idle and retry the command at 1-minute intervals a maximum of 5 times.
1005	ABORT	The test was aborted due to a configuration problem. This test may not be applicable or it may be disruptive to terminal equipment other than a voice terminal (for example, the modem pool member or Music On Hold).
1008	ABORT	Could not allocate a ringing circuit. Either all the ringing circuits are in use or the ringing generator is defective or it is not wired correctly. 1. Retry the command at 1-minute intervals a maximum of 5 times. 2. If the test continues to abort, look for RING-GEN errors in the Error Log. If an ABORT 1008 occurs for this test on other circuit packs as well, then the ringing generator may be defective or is not wired correctly (see errors for RING-GEN). If it does not occur on other ports, then all four ring phases are in use.

Continued on next page

Table 10-22. TEST #48 Station Present Test — *Continued*

Error Code	Test Result	Description/Recommendation
1018	ABORT	The test has been disabled by administration.The default for the `Test` field on the station form is **y**. Determine why this field has been set to `n` on this station (this may be due to the brief ringing disturbance that this test may cause). 1. To enable the test for a particular station being tested, enter **change station extension** and set the `Test?` field on the station from `n` to **y**.
2000	ABORT	Response to the test request was not received within the allowable time period.
2100	ABORT	Could not allocate necessary system resources to run this test. 1. Retry the command at 1-minute intervals a maximum of 5 times.

Continued on next page

Table 10-22. TEST #48 Station Present Test — *Continued*

Error Code	Test Result	Description/Recommendation
	FAIL	The terminal equipment is not connected to the circuit pack. Some terminal equipment, such as modems, may fail even when connected properly. 1. Remotely test the equipment. 2. If the test fails again, look for RING-GEN errors in the error log. If present, refer to “RING-GEN”. 3. Check all of the wiring between the station equipment and the switch. Then, run the test again. 4. If the test still fails, the set may be defective. Check the set, and replace it, if necessary. 5. Some terminal equipment could fail even when it is connected properly. If this is the case, disable the test using the **change station extension** command (enter **n** into the `Test` field). Note that this action also disables tests 6, 7, 161, and 35 on this port.
	PASS	The station is connected properly to the switch. This test may also pass if no terminal equipment is connected and the terminal is located very far from the switch. User-reported troubles on this port should be investigated by using other port tests, by examining station wiring, or by examining the station.
0	NO BOARD	The test could not relate the internal ID to the port (no board). This could be due to incorrect translations, no board is inserted, an incorrect board is inserted, or an insane board is inserted. 1. Check to ensure that the board translations are correct. Use the **list config** command, and resolve any problems. 2. If the board was found to be correctly inserted in step 1, issue the **busyout board** command. 3. Issue the **reset board** command. 4. Issue the **release busy board** command. 5. Issue the **test board long** command. This should re-establish the linkage between the internal ID and the port. If this is not the case, check to ensure that there is a valid board inserted.

Looparound Test (#161)

This test checks the on-board transmission capabilities of the NPE, the codec, and the battery feed chip of the analog port. The test passes if the signal measured by the tone detector is within acceptable limits.

Table 10-23. TEST #161 Looparound Test

Error Code	Test Result	Description/Recommendation
	ABORT	Could not allocate the necessary system resources to run this test. 1. Retry the command at 1-minute intervals a maximum of 5 times.
1000	ABORT	System resources required to run this test are not available. The port may be busy with a valid call. 1. Use the **display port PCSSpp** command to determine the station extension. 2. Use the **status station** command to determine the service state of the port. 3. If the port is in use, wait until the port is idle and retry the command at 1-minute intervals a maximum of 5 times.
1002	ABORT	The system could not allocate time slots for the test. The system may be under heavy traffic conditions or it may have time slots out-of-service due to TDM-BUS errors. Refer to “TDM-BUS” to diagnose TDM-BUS errors. 1. If system has no TDM-BUS errors and is not handling heavy traffic, retry the command at 1-minute intervals a maximum of 5 times.
1003	ABORT	The system could not allocate a tone receiver for the test. The system may be oversized for the number of tone detectors present or some tone detectors may be out-of-service. 1. Look for TTR-LEV errors in the Error Log. If present, refer to “TTR-LEV”. 2. Look for TONE-PT errors in the Error Log. If present, refer to “TONE-PT”. 3. If neither condition exists, retry the command at 1-minute intervals a maximum of 5 times.

Continued on next page

Table 10-23. TEST #161 Looparound Test — *Continued*

Error Code	Test Result	Description/Recommendation
1004	ABORT	The port was seized by a valid call during the test. The test has been aborted. 1. Use the **display port PCSSpp** command to determine the station extension. 2. Use the **status station** command to determine the service state of the port. 3. If the port is in use, wait until the port is idle and retry the command at 1-minute intervals a maximum of 5 times.
1005	ABORT	This test is not run on ports administered as External Alert, Announcement or combined modem pool ports. This error can be ignored.
1018	ABORT	The test has been disabled by administration. The default for the `Test` field on the station form is **y**. Determine why this field has been set to `n` on this station (this may be due to the ringing application test 48, that can be customer or terminal disturbing). 1. To enable the test for a particular station being tested, enter **change station extension** and set the `Test?` field on the station from `n` to **y**.
2000	ABORT	Response to the test request was not received within the allowable time period.
2100	ABORT	Could not allocate the necessary system resources to run this test. This could be due to a failure to seize the port. 1. Retry the command at 1-minute intervals a maximum of 5 times.

Continued on next page

Table 10-23. TEST #161 Looparound Test — *Continued*

Error Code	Test Result	Description/Recommendation
	FAIL	The reflective loop around test failed. This could cause noisy or unreliable connections, or users calling this port may hear an echo. The problem can also be off-board. 1. Since the test may be affected by a line seizure, repeat the test at 1-minute intervals for a maximum of 5 times. 2. Run circuit pack tests to check the tone generator circuit pack and the tone detector circuit pack by using the **test board PCSS short** command. 3. Resolve any problems on the tone generator circuit pack or the tone detector circuit pack. 4. If the tone generator and tone detector circuit packs are functioning properly, a voice terminal is connected and wired properly and the test still fails, replace the analog line circuit pack.
	PASS	The port is able to provide an analog transmission path to the station equipment. User-reported troubles on this port should be investigated by using other port tests, by examining station wiring, or by examining the station.
0	NO BOARD	The test could not relate the internal ID to the port (no board). This could be due to incorrect translations, no board is inserted, an incorrect board is inserted, or an insane board is inserted. 1. Check to ensure that the board translations are correct. Use the **list config** command and resolve any problems. 2. If the board was found to be correctly inserted in step 1, issue the **busyout board** command. 3. Issue the **reset board** command. 4. Issue the **release busy board** command. 5. Issue the **test board long** command. This should re-establish the linkage between the internal ID and the port. If this is not the case, check to ensure that there is a valid board inserted.

ANL-16-L (16-Port Neon Analog Line)

MO Name (in Alarm Log)	Alarm Level	Initial Command to Run[1]	Full Name of MO
ANL-16-L	MIN	test port PCSSpp l	16-Port Neon Analog Line
ANL-16-L	WRN	test port PCSSpp sh release station <ext>	16-Port Neon Analog Line

1 Where P is the port network number (1 for PPN and 2 or 3 for EPN); C is the carrier designation (for example, A, B, C, D, or E); SS is the address of the slot in the carrier where the circuit pack is located (for example, 01, 02, etc.); and pp is the 2-digit port number (for example, 01).

The following are 16-Port Analog Line circuit packs:

TN746	TN746B
TN468 [G3iV2-386]	TN749 [G3iV2-386]
TN468B [G3iV2-386]	TN2135 [G3iV2-386]
TN2144 [G3iV2-386]	TN2149 [G3iV2-386]

These circuit packs provide 16 ports for analog voice terminals. The TN746, TN468, and TN749 support only single-line, on-premises/in-building, analog voice terminals, and not off-premises stations, since these circuit packs are not equipped with lightning protection. The TN746B, TN2144, TN2149, and TN468B support both on-premises and off-premises (that is, out-of-building) analog voice terminals. The TN468, TN468B, TN479, TN2135, TN2144, and TN2149 do NOT support the neon message waiting feature.

Test #48 may cause some terminal equipment to ring briefly during daily maintenance. If this ringing is disturbing the customer or the terminal equipment, it should be disabled via the **change station <extension>** command. However, on some releases of the software, this action disables Tests #6, #7, #161, and #35 as well as Test #48.

No maintenance of the terminal connected to the 16-Port Neon Analog Line circuit pack is performed, except to determine whether or not the terminal is connected. Failures of the neon message waiting lamp power and the common ringing application circuitry are reported as part of the Common Port Circuit Pack errors (see errors 1281 and 1793 in the XXX-BD (Common Port Circuit Pack) Maintenance documentation).

Hardware Error Log Entries and Test to Clear Values

Table 10-24. 16-Port Neon Analog Line Error Log Entries

Error Type	Aux Data	Associated Test	Alarm Level	On/Off Board	Test to Clear Value
0[1]	0	Any	Any	Any	test port PCSSpp sh r 1
1 (a)	40960 40977	none			
15 (b)	Any	Audits and Updates Test (#36)			
18	0	busyout station <extension>	WRN	ON	release station <extension>
130 (c)		None	WRN	ON	test port PCSSpp sh
257 (d)	40973	none			
513 (e)		Station Present Test (#48)	WRN	OFF	test port PCSSpp sh r 2
769		Battery Feed Test (#35)	MIN/WRN[2]	ON	test port PCSSpp sh r 2
1025		Loop Around Test (#161)	MIN/WRN[2]	ON	test port PCSSpp l r 2
1281		Conference Test (#7)	MIN/WRN[2]	ON	test port PCSSpp l r 2
1537		NPE Crosstalk Test (#6)	MIN/WRN[2]	ON	test port PCSSpp l r 2

1 Run the Short Test Sequence first. If all tests pass, run the Long Test Sequence. Refer to the appropriate test description and follow the recommended procedures.

2 Minor alarms on this MO may be downgraded to Warning alarms based on the values used in the **set options** command.

Notes:

a. This is an in-line error and can only be resolved over time. This indicates that no terminal equipment was present when ringing was attempted. Execute the short **test port PCSSpp** command, and follow the procedure for the results of Test #48.

- 40960—indicates that too many simultaneous incoming ringing attempts were made on this board. Only four ports on a board may be ringing simultaneously. A fifth incoming call will cause an inline error from the board.
- 40977—indicates that no terminal equipment was connected when ringing was attempted. Run the short Test via the **test port PCSSpp** command, and follow the procedure for the results of Test #48.

b. This is a software audit error that does not indicate any hardware malfunction. Run Short Test Sequence and investigate associated errors (if any).

c. This error type indicates that the circuit pack has been removed or has been insane for more than 11 minutes. To clear the error, reinsert or replace the circuit pack.

d. This is an in-line error and can only be resolved over time. This error indicates that ringing voltage is absent. If only one Analog circuit pack in the system has this problem, then replace the circuit pack. If only Analog circuit packs on a particular carrier have this error, then the ringing generator may not be connected to this carrier. If Analog circuit packs on many carriers have this error, then it is probably a problem with the ringing generator.

e. Test #48 may cause some terminal equipment to ring briefly during daily maintenance. If this ringing is disturbing the customer or the terminal equipment, it should be disabled using the **change station <extension>** command. However, on some releases of the software, this action disables Tests #6, #7, #161, and #35 as well as Test #48.

System Technician-Demanded Tests: Descriptions and Error Codes

Always investigate tests in the order presented in the following table when inspecting errors in the system. By clearing error codes associated with the *Battery Feed Test,* for example, you may also clear errors generated from other tests in the testing sequence.

Order of Investigation	Short Test Sequence	Long Test Sequence	D/ ND[1]
Battery Feed Test (#35)	X	X	ND
Station Present Test (#48)	X	X	ND
Loop Around Test (#161)		X	ND
Conference Test (#7)		X	ND
NPE Crosstalk Test (#6)		X	ND
Station Status and Translation Audits and Updates Test (#36)	X	X	ND

1 D = Destructive; ND = Nondestructive

NPE Crosstalk Test (#6)

One or more Network Processing Elements (NPEs) reside on each circuit pack with a TDM Bus interface. The NPE controls port connectivity and gain, and provides conferencing functions on a per-port basis. The NPE Crosstalk Test verifies that this port's NPE channel talks on the selected time slot and never crosses over to time slots reserved for other connections. If the NPE is not working correctly, one-way and noisy connections may be observed. This test is usually only part of a port's Long Test Sequence and takes about 20 to 30 seconds to complete.

Table 10-25. TEST #6 NPE Crosstalk Test

Error Code	Test Result	Description/Recommendation
	ABORT	Could not allocate the necessary system resources to run this test. 1. Retry the command at 1-minute intervals a maximum of 5 times.
1000	ABORT	System resources required to run this test are not available. The port may be busy with a valid call. Use the **display port PCSSpp** command to determine the station extension. Use the **status station** command to determine the service state of the port. If the service state indicates that the port is in use, the port is unavailable for certain tests. You must wait until the port is idle before retesting. 1. If the port status is idle, retry the command at 1-minute intervals a maximum of 5 times.
1001	ABORT	System resources required to run this test are not available. This could be due to a failure to seize the port. 1. Retry the command at 1-minute intervals a maximum of 5 times.
1002	ABORT	The system could not allocate time slots for the test. The system may be under heavy traffic conditions or it may have time slots out-of-service due to TDM-BUS errors. Refer to "TDM-BUS (TDM Bus)" Maintenance documentation to diagnose any active TDM-BUS errors. 1. If system has no TDM-BUS errors and is not handling heavy traffic, repeat test at 1-minute intervals a maximum of 5 times.

Continued on next page

Table 10-25. TEST #6 NPE Crosstalk Test — *Continued*

Error Code	Test Result	Description/Recommendation
1003	ABORT	The system could not allocate a tone receiver for the test. The system may be oversized for the number of Tone Detectors present or some Tone Detectors may be out-of-service. 1. Look for TTR-LEV errors in the Error Log. If present, refer to “TTR-LEV (TTR Level)” Maintenance documentation. 2. Look for TONE-PT errors in the Error Log. If present, refer to “TTR-LEV (TTR Level)” Maintenance documentation. 3. If neither condition exists, retry the test at 1-minute intervals a maximum of 5 times.
1004	ABORT	The port was seized by a valid call during the test. The test has been aborted. Use the **display port PCSSpp** command to determine the station extension. Use the **status station** command to determine the service state of the port. If the service state indicates that the port is in use, the port is unavailable for certain tests. You must wait until the port is idle before retesting. 1. Retry the command at 1-minute intervals a maximum of 5 times. 2. If the test continues to abort and the port is not in use, escalate the problem.
1005	ABORT	The test was aborted due to a configuration problem. This test may not be applicable, or it may be disruptive to terminal equipment other than a voice terminal (for example, the modem pool member or music on hold).
1018	ABORT	The test has been disabled via administration. The default for the 'Test' field on the 'Station' form is 'y'; thus, you may want to determine why this field has been set to 'n' on this station (this may be due to the ringing application test 48, which can be customer or terminal disturbing). 1. To enable the test for a particular station being tested, enter **change station extension** and set the ‘Test?’ field on the station from 'n' to 'y.'
2000	ABORT	Response to the test request was not received within the allowable time period.
2100	ABORT	System resources required to run this test are not available. This could be due to a failure to seize the port. 1. Retry the command at 1-minute intervals a maximum of 5 times.

Continued on next page

Table 10-25. TEST #6 NPE Crosstalk Test — *Continued*

Error Code	Test Result	Description/Recommendation
Any	FAIL	This test can fail due to on-board or off-board problems. Off-board problems of concern include EXP-INTF faults, TDM-BUS faults, and faults associated with the tone detectors/tone generators. Clear all off-board problems before replacing the board. Keep in mind that a TDM-BUS problem is usually the result of a faulty board connected to the backplane or bent pins on the backplane. 1. Look for EXP-INTF errors in the error log. If present, refer to the EXP-INTF Maintenance documentation. 2. Look for TDM-BUS errors in the error log. If present, refer to the TDM-BUS Maintenance documentation. 3. Look for TONE-BD and/or TONE-PT errors in the error log. If present, refer to the TONE-BD Maintenance documentation and the TONE-PT Maintenance documentation. 4. Test the board when the faults from steps 1, 2, and 3 are cleared. Replace the board only if the test fails.
	PASS	The port is correctly using its allocated time slots. User-reported troubles on this port should be investigated by using other port tests, by examining station wiring, or by examining the station.
0	NO BOARD	The test could not relate the internal ID to the port (no board). This could be due to incorrect translations, no board is inserted, an incorrect board is inserted, or an insane board is inserted. 1. Check to ensure that the board translations are correct. Use the **list config** command, and resolve any problems that are found. 2. If the board was found to be correctly inserted in step 1, issue the **busyout board** command. 3. Issue the **reset board** command. 4. Issue the **release busy board** command. 5. Issue the **test board long** command. This should re-establish the linkage between the internal ID and the port. If this is not the case, dispatch to check to ensure that there is a valid board inserted.

Conference Circuit Test (#7)

One or more NPEs reside on each circuit pack with a TDM Bus interface. The NPE controls port connectivity and gain, and provides conferencing functions on a per-port basis. The Conference Circuit Test verifies that the NPE channel for the port being tested can correctly perform the conferencing function. The NPE is instructed to listen to several different tones and conference the tones together. The resulting signal is then measured by a Tone Detector port. If the level of the tone is within a certain range, the test passes.

Table 10-26. TEST #7 Conference Circuit Test

Error Code	Test Result	Description/Recommendation
	ABORT	Could not allocate the necessary system resources to run this test. 1. Retry the command at 1-minute intervals a maximum of 5 times.
1000	ABORT	System resources required to run this test are not available. The port may be busy with a valid call. Use the **display port PCSSpp** command to determine the station extension. Use the **status station** command to determine the service state of the port. If the service state indicates that the port is in use, then the port is unavailable for certain tests. You must wait until the port is idle before retesting. 1. If the port status is idle, then retry the command at 1-minute intervals a maximum of 5 times.
1004	ABORT	The port was seized by a valid call during the test. The test has been aborted. Use the **display port PCSSpp** command to determine the station extension. Use the **status station** command to determine the service state of the port. If the service state indicates that the port is in use, then the port is unavailable for certain tests. You must wait until the port is idle before retesting. 1. Retry the command at 1-minute intervals a maximum of 5 times. 2. If the test continues to abort and the port is not in use, escalate the problem.
1005	ABORT	The test was aborted due to a configuration problem. This test may not be applicable, or it may be disruptive to terminal equipment other than a voice terminal (for example, the modem pool member or music on hold).

Continued on next page

Table 10-26. TEST #7 Conference Circuit Test — *Continued*

Error Code	Test Result	Description/Recommendation
1018	ABORT	The test has been disabled via administration. The default for the 'Test' field on the 'Station' form is 'y'; thus, you may want to determine why this field has been set to 'n' on this station (this may be due to the ringing application test 48, which can be customer or terminal disturbing). 1. To enable the test for the particular analog station being tested, enter **change station extension** and set the 'Test?' field on the station from 'n' to 'y.'
2000	ABORT	Response to the test request was not received within the allowable time period.
2100	ABORT	System resources required to run this test are not available. 1. Look for TONE-PT errors in the error log. If present, refer to the TONE-PT Maintenance documentation. 2. If there are no TONE-PT errors in the error log, retry the test at 1-minute intervals for a maximum of 5 times.

Continued on next page

Table 10-26. TEST #7 Conference Circuit Test — *Continued*

Error Code	Test Result	Description/Recommendation
Any	FAIL	The NPE of the tested port did not conference the tones correctly. This will cause noisy and unreliable connections. 1. Issue the **display port** and the **status station** commands to determine if the station is idle. If the station is found to be idle, issue the **test port** command for this port. 2. If the test continues to fail, issue the **busyout port** and the **release port** commands, and then retest the port. 3. If the test still fails, replace the board.
	PASS	The port can correctly conference multiple connections. User-reported troubles on this port should be investigated by using other port tests and by examining station, trunk, or external wiring.
0	NO BOARD	The test could not relate the internal ID to the port (no board). This could be due to incorrect translations, no board is inserted, an incorrect board is inserted, or an insane board is inserted. 1. Check to ensure that the board translations are correct. Use the **list config** command, and resolve any problems that are found. 2. If the board was found to be correctly inserted in step 1, issue the **busyout board** command. 3. Issue the **reset board** command. 4. Issue the **release busy board** command. 5. Issue the **test board long** command. This should re-establish the linkage between the internal ID and the port. If this is not the case, dispatch to check to ensure that there is a valid board inserted.

Battery Feed Test (also called Port Diagnostic Test) (#35)

The battery feed chip provides power to the telephone equipment, signaling, rotary dial pulsing, transmission, and balance. This test checks the signaling and switchhook capabilities of the battery feed chip by terminating the port, applying battery, and by trying to detect a current.

NOTE:
For the TN746B 16-Port Neon Analog Line circuit pack, Test #35 always "passes." No actual testing is performed on the TN746B while the test is running. Test #35 operates in the normal manner for TN746.

Table 10-27. TEST #35 Battery Feed Test

Error Code	Test Result	Description/Recommendation
	ABORT	Could not allocate the necessary system resources to run this test. 1. Retry the command at 1-minute intervals a maximum of 5 times.
1000	ABORT	System resources required to run this test are not available. The port may be busy with a valid call. Use the **display port PCSSpp** command to determine the station extension. Use the **status station** command to determine the service state of the port. If the service state indicates that the port is in use, then the port is unavailable for certain tests. You must wait until the port is idle before retesting. 1. If the port status is idle, then retry the command at 1-minute intervals a maximum of 5 times.
1004	ABORT	The port was seized by a valid call during the test. The test has been aborted. Use the **display port PCSSpp** command to determine the station extension. Use the **status station** command to determine the service state of the port. If the service state indicates that the port is in use, then the port is unavailable for certain tests. You must wait until the port is idle before retesting. 1. Retry the command at 1-minute intervals a maximum of 5 times. 2. If the test continues to abort and the port is not in use, escalate the problem.

Continued on next page

Table 10-27. TEST #35 Battery Feed Test — *Continued*

Error Code	Test Result	Description/Recommendation
1005	ABORT	The test was aborted due to a configuration problem. This test may not be applicable, or it may be disruptive to terminal equipment other than a voice terminal (for example, the modem pool member or music on hold).
1018	ABORT	The test has been disabled via administration. The default for the 'Test' field on the 'Station' form is 'y'; thus, you may want to determine why this field has been set to 'n' on this station (this may be due to the ringing application test 48, which can be customer or terminal disturbing). 1. To enable the test for the particular analog station being tested, enter **change station extension** and set the 'Test?' field on the station from 'n' to 'y.'
2000	ABORT	Response to the test request was not received within the allowable time period.
2100	ABORT	Could not allocate the necessary system resources to run this test. 1. Retry the command at 1-minute intervals a maximum of 5 times.

Continued on next page

Table 10-27. TEST #35 Battery Feed Test — *Continued*

Error Code	Test Result	Description/Recommendation
	FAIL	The port's battery feed chip is unable to supply sufficient power to the terminal equipment. This could be a marginal test, and the terminal equipment may be operating satisfactorily. 1. Retry the test at 1-minute intervals for a maximum of 5 times. 2. If the test continues to fail, determine whether the customer is experiencing problems on this line. Replace the circuit pack only if the customer is experiencing problems.
	PASS	The port's battery feed chip is able to provide power to the station equipment to detect on-/off-hook, but may not be able to supply power for touch-tones. If touch-tones are inoperative on this station, then replace the circuit pack because this port is inoperative. User-reported troubles on this port should be investigated by using other port tests, by examining station wiring, or by examining the station.
0	NO BOARD	The test could not relate the internal ID to the port (no board). This could be due to incorrect translations, no board is inserted, an incorrect board is inserted, or an insane board is inserted. 1. Check to ensure that the board translations are correct. Use the **list config** command, and resolve any problems that are found. 2. If the board was found to be correctly inserted in step 1, issue the **busyout board** command. 3. Issue the **reset board** command. 4. Issue the **release busy board** command. 5. Issue the **test board long** command. This should re-establish the linkage between the internal ID and the port. If this is not the case, dispatch to check to ensure that there is a valid board inserted.

Station Status and Translation Audits and Updates Test (#36)

This test updates the Analog port's message lamp state (if it has one) and translations (such as station type, dial type, network connection) with information kept in the software. The software is updated with the switchhook state reported by the port processor. When the ringer is in the off state, this test also turns off the station's ringer to prevent constant ringing caused by defective hardware.

Table 10-28. TEST #36 Station Status and Translation Audits and Updates Test

Error Code	Test Result	Description/Recommendation
	ABORT	Could not allocate the necessary system resources to run this test. 1. Retry the command at 1-minute intervals a maximum of 5 times.
1004	ABORT	The port was seized by a valid call during the test. The test has been aborted. Use the **display port PCSSpp** command to determine the station extension. Use the **status station** command to determine the service state of the port. If the service state indicates that the port is in use, then the port is unavailable for certain tests. You must wait until the port is idle before retesting. 1. Retry the command at 1-minute intervals a maximum of 5 times. 2. If the test continues to abort and the port is not in use, escalate the problem.
1005	ABORT	The test was aborted due to a configuration problem. This test may not be applicable, or it may be disruptive to terminal equipment other than a voice terminal (for example, the modem pool member or music on hold).
1006	ABORT	This port has been busied out by command, or taken out-of-service by the failure of the NPE Crosstalk Test. 1. Look in the error log for error type 18 (port busied out) for this port. If this error is present, release the port with the **release station extension** command, and run the test again. 2. Look in the error log for error type 1025 (NPE crosstalk test failed) for this port. If this error is present, investigate the errors associated with the NPE Crosstalk Test 6. 3. Make sure that the terminal is connected and in service, and then retest.

Continued on next page

Table 10-28. TEST #36 Station Status and Translation Audits and Updates Test *— Continued*

Error Code	Test Result	Description/Recommendation
2000	ABORT	Response to the test request was not received within the allowable time period.
2100	ABORT	Could not allocate the necessary system resources to run this test. 1. Retry the command at 1-minute intervals a maximum of 5 times.
1	FAIL	This does not indicate a hardware problem. The switchhook audit failed. The other updates were not performed because of this failure. This may occur when the audit is performed at the same time that the terminal equipment goes off-hook. Use the **status station** command to determine when the port is available for testing. 1. When the port becomes available for testing, retry the command at 1-minute intervals a maximum of 5 times.

Continued on next page

Table 10-28. TEST #36 Station Status and Translation Audits and Updates Test — *Continued*

Error Code	Test Result	Description/Recommendation
5	FAIL	This does not indicate a hardware problem. However, there may be an internal software error. The message waiting lamp update failed. The translation and ringer updates were not performed because of this failure.
7	FAIL	The translation update failed. This does not indicate a hardware problem. However, there may be an internal software error. The ringer update was not performed because of this failure.
8	FAIL	This does not indicate a hardware problem. However, there may be an internal software error. The ringer update failed. 1. Retry the command at 1-minute intervals a maximum of 5 times.
	PASS	The software and the port processor have the same status. User-reported troubles on this port should be investigated by using other port tests, by examining station wiring, or by examining the station.
0	NO BOARD	The test could not relate the internal ID to the port (no board). This could be due to incorrect translations, no board is inserted, an incorrect board is inserted, or an insane board is inserted. 1. Check to ensure that the board translations are correct. Use the **list config** command, and resolve any problems that are found. 2. If the board was found to be correctly inserted in step 1, issue the **busyout board** command. 3. Issue the **reset board** command. 4. Issue the **release busy board** command. 5. Issue the **test board long** command. This should re-establish the linkage between the internal ID and the port. If this is not the case, dispatch to check to ensure that there is a valid board inserted.

Station Present Test (also called Ringing Application Test) (#48)

This test provides a burst of ringing current to the terminal equipment and detects that current flows. This test ascertains whether terminal equipment is connected to the port.

This test may cause some terminal equipment to ring briefly during daily maintenance. If this ringing is disturbing the customer or the terminal equipment, it should be disabled using the Tests field of the station administration screen form. However, on some releases of the software, this action disables Tests #6, #7, #161, and #35 as well as Test #48.

Table 10-29. TEST #48 Station Present Test

Error Code	Test Result	Description/Recommendation
	ABORT	Could not allocate the necessary system resources to run this test. 1. Retry the command at 1-minute intervals a maximum of 5 times.
1000	ABORT	System resources required to run this test are not available. The port may be busy with a valid call. Use the **display port PCSSpp** command to determine the station extension. Use the **status station** command to determine the service state of the port. If the service state indicates that the port is in use, then the port is unavailable for certain tests. You must wait until the port is idle before retesting. 1. If the port status is idle, then retry the command at 1-minute intervals a maximum of 5 times.
1004	ABORT	The port was seized by a valid call during the test. The test has been aborted. Use the **display port PCSSpp** command to determine the station extension. Use the **status station** command to determine the service state of the port. If the service state indicates that the port is in use, then the port is unavailable for certain tests. You must wait until the port is idle before retesting. 1. Retry the command at 1-minute intervals a maximum of 5 times. 2. If the test continues to abort and the port is not in use, escalate the problem.
1005	ABORT	The test was aborted due to a configuration problem. This test may not be applicable, or it may be disruptive to terminal equipment other than a voice terminal (for example, the modem pool member or music on hold).

Continued on next page

Table 10-29. TEST #48 Station Present Test — *Continued*

Error Code	Test Result	Description/Recommendation
1008	ABORT	Could not allocate a ringing circuit. Either all the ringing circuits are in use or the ringing generator is defective or it is not wired correctly. 1. Retry the command at 1-minute intervals a maximum of 5 times. 2. If the test continues to abort, look for RING-GEN errors in the Error Log. If an ABORT 1008 occurs for this test on other circuit packs as well, then the ringing generator may be defective or is not wired correctly (see errors for RING-GEN). If it doesn't occur on other ports, then all four ring phases are in use.
1018	ABORT	The test has been disabled via administration. The default for the 'Test' field on the 'Station' form is 'y'; thus, you may want to determine why this field has been set to 'n' on this station (this may be due to the brief ringing disturbance that this test may cause). 1. To enable the test for the particular analog station being tested, enter **change station extension** and set the 'Test?' field on the station from 'n' to 'y.'
2000	ABORT	Response to the test request was not received within the allowable time period.
2100	ABORT	Could not allocate necessary system resources to run this test. 1. Retry the command at 1-minute intervals a maximum of 5 times.

Continued on next page

Table 10-29. TEST #48 Station Present Test — *Continued*

Error Code	Test Result	Description/Recommendation
	FAIL	The terminal equipment is not connected to the circuit pack. Some terminal equipment such as modems may fail even when connected properly. 1. Remotely test the equipment. 2. If the test fails again, look for RING-GEN errors in the error log. If present, refer to the RING-GEN (analog ring generator) Maintenance documentation. 3. Check all of the wiring between the station equipment and the switch. Then, run the test again. 4. If the test still fails, the set may be defective. Check the set, and replace it, if necessary. 5. Some terminal equipment could fail even when it is connected properly. If this is the case, disable the test using the **change station extension** command (enter 'n' into the Test field). Note that this action also disables tests 6, 7, 161, and 35 on this port.
	PASS	The station is connected properly to the switch. This test may also pass if no terminal equipment is connected and the terminal is located very far from the switch. User-reported troubles on this port should be investigated by using other port tests, by examining station wiring, or by examining the station.
0	NO BOARD	The test could not relate the internal ID to the port (no board). This could be due to incorrect translations, no board is inserted, an incorrect board is inserted, or an insane board is inserted. 1. Check to ensure that the board translations are correct. Use the **list config** command, and resolve any problems that are found. 2. If the board was found to be correctly inserted in step 1, issue the **busyout board** command. 3. Issue the **reset board** command. 4. Issue the **release busy board** command. 5. Issue the **test board long** command. This should re-establish the linkage between the internal ID and the port. If this is not the case, dispatch to check to ensure that there is a valid board inserted.

Loop Around Test (#161)

Each Analog port consists of:

- an NPE for port connectivity and gain, and conferencing functionality
- a code that converts the digital signals of the TDM Bus to analog signals
- a battery feed chip that provides power to the telephone set for signaling, dial pulsing, transmission, and balance

This test is designed to check the on-board transmission capabilities of the NPE, the codec, and the battery feed chip of the analog port. A Tone Detector and a Tone Generator talk and listen on the same pair of time slots as the Analog Port. The Analog Port is then instructed to go into loop around mode (see the following below). The test passes if the signal measured by the Tone Detector is within acceptable limits.

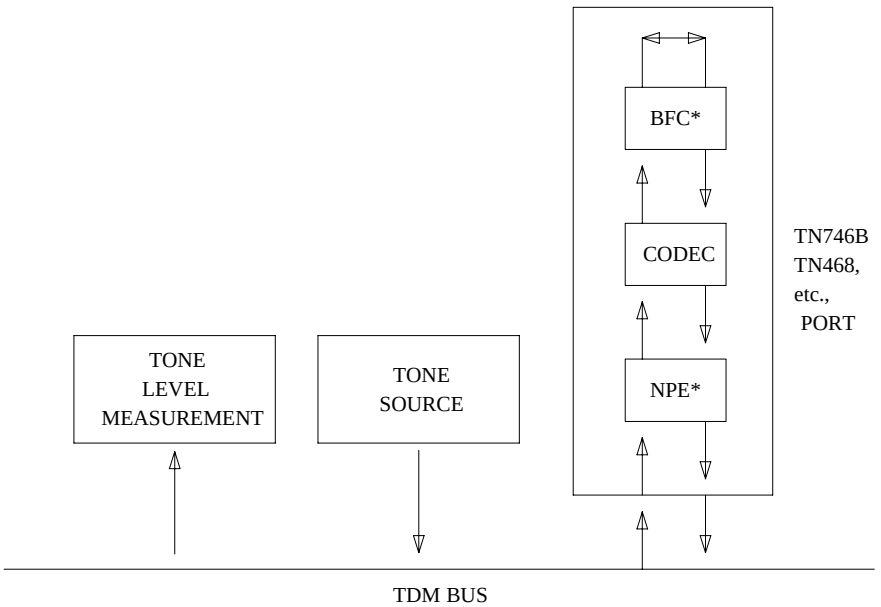

* BFC - BATTERY FEED CHIP
NPE - NETWORK PROCESSING ELEMENT

Figure 10-2. Analog Loop Around Test

Table 10-30. TEST #161 Loop Around Test

Error Code	Test Result	Description/Recommendation
	ABORT	Could not allocate the necessary system resources to run this test. 1. Retry the command at 1-minute intervals a maximum of 5 times.
1000	ABORT	System resources required to run this test are not available. The port may be busy with a valid call. Use the **display port PCSSpp** command to determine the station extension. Use the **status station** command to determine the service state of the port. If the service state indicates that the port is in use, then the port is unavailable for certain tests. You must wait until the port is idle before retesting. 1. If the port status is idle, then retry the command at 1-minute intervals a maximum of 5 times.
1002	ABORT	The system could not allocate time slots for the test. The system may be under heavy traffic conditions or it may have time slots out-of-service due to TDM-BUS errors. Refer to “TDM-BUS (TDM Bus)” Maintenance documentation to diagnose any active TDM-BUS errors. 1. If system has no TDM-BUS errors and is not handling heavy traffic, repeat test at 1-minute intervals a maximum of 5 times.
1003	ABORT	The system could not allocate a tone receiver for the test. The system may be oversized for the number of Tone Detectors present or some Tone Detectors may be out-of-service. 1. Look for TTR-LEV errors in the Error Log. If present, refer to the “TTR-LEV (TTR Level)” Maintenance documentation. 2. Look for TONE-PT errors in the Error Log. If present, refer to the “TONE-PT (Tone Generator)” Maintenance documentation. 3. If neither condition exists, retry the test at 1-minute intervals a maximum of 5 times.

Continued on next page

Table 10-30. TEST #161 Loop Around Test — *Continued*

Error Code	Test Result	Description/Recommendation
1004	ABORT	The port was seized by a valid call during the test. The test has been aborted. Use the **display port PCSSpp** command to determine the station extension. Use the **status station** command to determine the service state of the port. If the service state indicates that the port is in use, then the port is unavailable for certain tests. You must wait until the port is idle before retesting. 1. Retry the command at 1-minute intervals a maximum of 5 times. 2. If the test continues to abort and the port is not in use, escalate the problem.
1005	ABORT	The test is not run because the port is administered as either an External Alert or Announcement port.
1018	ABORT	The test has been disabled via administration. The default for the 'Test' field on the 'Station' form is 'y'; thus, you may want to determine why this field has been set to 'n' on this station (this may be due to the ringing application test 48, which can be customer or terminal disturbing). 1. To enable the test for the particular analog station being tested, enter **change station extension** and set the 'Test?' field on the station from 'n' to 'y.'
2000	ABORT	Response to the test request was not received within the allowable time period.
2100	ABORT	Could not allocate the necessary system resources to run this test. This could be due to a failure to seize the port. 1. Retry the command at 1-minute intervals a maximum of 5 times.

Continued on next page

Table 10-30. TEST #161 Loop Around Test — *Continued*

Error Code	Test Result	Description/Recommendation
	FAIL	The reflective loop around test failed. This could cause noisy or unreliable connections, or users calling this port may hear an echo. The problem can also be off-board, as described below. 1. Since the test may be affected by a line seizure, repeat the test at 1-minute intervals for a maximum of 5 times. 2. Run circuit pack tests to check the tone generator circuit pack and the tone detector circuit pack by using the **test board PCSS short** command. 3. Resolve any problems that are detected on the tone generator circuit pack or the tone detector circuit pack. 4. If the tone generator and tone detector circuit packs are functioning properly and the test still fails and a voice terminal is connected and wired properly, replace the analog line circuit pack.
	PASS	The port is able to provide an analog transmission path to the station equipment. User-reported troubles on this port should be investigated by using other port tests, by examining station wiring, or by examining the station.
0	NO BOARD	The test could not relate the internal ID to the port (no board). This could be due to incorrect translations, no board is inserted, an incorrect board is inserted, or an insane board is inserted. 1. Check to ensure that the board translations are correct. Use the **list config** command, and resolve any problems that are found. 2. If the board was found to be correctly inserted in step 1, issue the **busyout board** command. 3. Issue the **reset board** command. 4. Issue the **release busy board** command. 5. Issue the **test board long** command. This should re-establish the linkage between the internal ID and the port. If this is not the case, dispatch to check to ensure that there is a valid board inserted.

ANL-BD (Analog Line Circuit Pack)

MO Name (in Alarm Log)	Alarm Level	Initial Command to Run[1]	Full Name of MO
ANL-BD	MIN	test board PCSS sh	8-Port Analog Line Circuit Pack
ANL-BD	WRN	test board PCSS sh	8-Port Analog Line Circuit Pack
ANL-BD	MIN	test board PCSS sh	8-Port Neon Analog Line Circuit Pack
ANL-BD	WRN	test board PCSS sh	8-Port Neon Analog Line Circuit Pack
ANL-BD	MIN	test board PCSS sh	16-Port Neon Analog Line Circuit Pack
ANL-BD	WRN	test board PCSS sh	16-Port Neon Analog Line Circuit Pack

1 Where P is the port network number (1 for PPN and 2 or [G.1] 3 for EPN); C is the carrier designation (for example, A, B, C, D, or E); and SS is the address of the slot in the carrier where the circuit pack is located (for example, 01, 02, etc.).

Refer to “XXX-BD (Common Port Circuit Pack)” Maintenance documentation for circuit pack level errors. See also “ANL-LINE (8-Port Analog Line), ANL-NE-L (8-Port Neon Analog Line)”, and “ANL-16-L (16-Port Neon Analog Line)” Maintenance documentation for related line information.

ANL-LINE (8-Port Analog Line), ANL-NE-L (8-Port Neon Analog Line)

MO Name (in Alarm Log)	Alarm Level	Initial Command to Run[1]	Full Name of MO
ANL-LINE	MIN	test port PCSSpp l	8-Port Analog Line
ANL-LINE	WRN	test port PCSSpp sh	8-Port Analog Line
ANL-NE-L	MIN	test port PCSSpp l	8-Port Neon Analog Line
ANL-NE-L	WRN	test port PCSSpp sh	8-Port Neon Analog Line

1 Where P is the port network number (1 for PPN and 2 or 3 for EPN); C is the carrier designation (for example, A, B, C, D, or E); SS is the address of the slot in the carrier where the circuit pack is located (for example, 01, 02, etc.); and pp is the 2-digit port number (for example, 01).

The 8-Port Analog Line circuit packs are:

TN742	TN431 [G3iV2-386]
TN769	TN443 [G3iV2-386]
TN712	TN467 [G3iV2-386]
	TN411 [G3iV2-386]

These circuit packs provide eight ports for single line on-premises or off-premises analog endpoints such as analog voice terminals, queue warning level lamps, recorded announcements, dictation machines, PagePac™ paging equipment, external alerting devices, modems, facsimile machines, and AUDIX voice ports. The TN769 supports a neon message waiting lamp. The other eight-port analog lines do not support the lamp.

Test #48 may cause some terminal equipment to ring briefly during daily maintenance. If this ringing is disturbing the customer or the terminal equipment, it should be disabled using the Tests field of the station administration screen. However, on some releases of the software, this action disables Tests #6, #47, and #35 as well as Test #48. Test #47 may cause a false alarm when the port is connected to off-premises equipment, some non-voice terminal equipment, and some loop equipment. If this is the case, then the test should be disabled using the Tests field of the **change station <extension>** command.

No maintenance of the terminal connected to the 8-Port Analog Line circuit pack or 8-Port Neon Analog Line circuit pack is performed, except to determine whether or not the terminal is connected. Failures of the neon message waiting lamp power (for ANL-NE-L only) and the common ringing application circuitry are reported as part of the Common Port Circuit Pack errors (see errors 1281 and 1793 in the XXX-BD (Common Port Circuit Pack) Maintenance documentation).

Hardware Error Log Entries and Test to Clear Values

Table 10-31. 8-Port Analog Line Error Log Entries

Error Type	Aux Data	Associated Test	Alarm Level	On/Off Board	Test to Clear Value
0[1]	0	Any	Any	Any	test port PCSSpp sh r 1
1 (a)	40960 40975 40977	None			
15 (b)	Any	Audits and Updates Test (#36)			
18	0	busyout station <extension>	WRN	OFF	release station <extension>
130(c)		None	WRN	ON	test port PCSSpp sh
257 (d)		Station Present Test (#48)	WRN	OFF	test port PCSSpp sh r 3
513		Battery Feed Test (#35)	MIN/ WRN[2]	ON	test port PCSSpp sh r 2
769 (e)		Loop Around and Conference Test(#47)			test port PCSSpp l r 3
1025		NPE Crosstalk Test (#6)	MIN/ WRN[2]	ON	test port PCSSpp l r 3
1281 (f)					
1793 (f)					

1 Run the Short Test Sequence first. If all tests pass, run the Long Test Sequence. Refer to the appropriate test description and follow the recommended procedures.

2 Major or Minor alarms on this MO may be downgraded to Warning alarms based on the values used in the **set options** command.

Notes:

a. These are in-line errors and can only be resolved over time.

- 40960—indicates that too many simultaneous incoming ringing attempts were made on this board. Only four ports on a board may be ringing simultaneously. A fifth incoming call will cause an inline error from the board.
- 40975—indicates that the terminal equipment was on-hook when ring-tip was detected during ringing. This usually indicates a failure in the terminal equipment or the type of terminal has a low ringer impedance. Call the terminal equipment and verify that the terminal

rings. If the terminal doesn't ring, then replace it. Otherwise, issue the **test port PCSSpp** command, and follow the procedure for Test #48.

- 40977—indicates that no terminal equipment was connected when ringing was attempted. Run the Short Test via the **test port PCSSpp** command, and follow the procedure for the results of Test #48.

b. This is a software audit error that does not indicate any hardware malfunction. Run Short Test Sequence and investigate errors (if any).

c. This error type indicates that the circuit pack has been removed or has been insane for more than 11 minutes. To clear the error, reinsert or replace the circuit pack.

d. Test #48 may cause some terminal equipment to ring briefly during daily maintenance. If this ringing is disturbing the customer or the terminal equipment, it should be disabled via the **change station <extension>** command. However, on some releases of the software, this disables Tests #6, #47, and #35 as well as Test #48.

e. Test #47 may cause a false alarm when the port is connected to off-premises equipment, some non-voice terminal equipment, and some loop equipment. If this causes a false alarm, then disable the test by changing the `Tests` field of the **change station** command to **n**.

f. Refer to "XXX-BD (Common Port Circuit Pack)" Maintenance documentation.

System Technician-Demanded Tests: Descriptions and Error Codes

Always investigate tests in the order presented in the table below when inspecting errors in the system. By clearing error codes associated with the *Battery Feed Test*, for example, you may also clear errors generated from other tests in the testing sequence.

Order of Investigation	Short Test Sequence	Long Test Sequence	D/ ND[1]
Battery Feed Test (#35)	X	X	ND
Station Present Test (#48)	X	X	ND
NPE Crosstalk Test (#6)		X	ND
Loop Around and Conference Test (#47)		X	ND
Station Status and Translation Audits and Updates Test (#36)	X	X	ND

1 D = Destructive; ND = Nondestructive

NPE Crosstalk Test (#6)

One or more NPEs reside on each circuit pack with a TDM Bus interface. The NPE controls port connectivity and gain, and provides conferencing functions on a per-port basis. The NPE Crosstalk Test verifies that this port's NPE channel talks on the selected time slot and never crosses over to time slots reserved for other connections. If the NPE is not working correctly, one-way and noisy connections may be observed. This test is usually only part of a port's Long Test Sequence and takes about 20 to 30 seconds to complete.

Table 10-32. TEST #6 NPE Crosstalk Test

Error Code	Test Result	Description/Recommendation
1000	ABORT	System resources required to run this test are not available. The port may be busy with a valid call. Use the **display port PCSSpp** command to determine the station extension. Use the **status station** command to determine the service state of the port. If the service state indicates that the port is in use, then the port is unavailable for certain tests. You must wait until the port is idle before retesting. 1. If the port status is idle, then retry the command at 1-minute intervals a maximum of 5 times.
1001	ABORT	Could not allocate the necessary system resources to run this test. 1. Retry the command at 1-minute intervals a maximum of 5 times.
1002	ABORT	The system could not allocate time slots for the test. The system may be under heavy traffic conditions or it may have time slots out-of-service due to TDM-BUS errors. Refer to "TDM-BUS (TDM Bus)" Maintenance documentation to diagnose any active TDM-BUS errors. 1. If system has no TDM-BUS errors and is not handling heavy traffic, repeat test at 1-minute intervals a maximum of 5 times.

Continued on next page

Table 10-32. TEST #6 NPE Crosstalk Test — *Continued*

Error Code	Test Result	Description/Recommendation
1003	ABORT	The system could not allocate a tone receiver for the test. The system may be oversized for the number of Tone Detectors present or some Tone Detectors may be out-of-service. 1. Look for TTR-LEV errors in the Error Log. If present, refer to “TTR-LEV (TTR Level)” Maintenance documentation. 2. Look for TONE-PT errors in the Error Log. If present, refer to “TONE-PT (Tone Generator)” Maintenance documentation. 3. If neither condition exists, retry the test at 1-minute intervals a maximum of 5 times.
1004	ABORT	System resources required to run this test are not available. The port may be busy with a valid call. Use the **display port PCSSpp** command to determine the station extension. Use the **status station** command to determine the service state of the port. If the service state indicates that the port is in use, then the port is unavailable for certain tests. You must wait until the port is idle before retesting. 1. Retry the command at 1-minute intervals a maximum of 5 times. 2. If the test continues to abort and the port is not in use, escalate the problem.
1005	ABORT	The test was aborted due to a configuration problem. This code will result under either of the following conditions: 1. This test may not be applicable, or it may be disruptive to terminal equipment other than a voice terminal (for example, the modem pool member or music on hold). 2. The circuit pack is one of the following: — TN742 vintages 13,14 and 15 — TN769 vintages 3,4 and 5
1018	ABORT	Test disabled via administration. The default for the 'Test' field on the 'Station' form is 'y'; thus, you may want to determine why this field has been set to 'n' on this station (this may be due to the ringing application test 48, which can be customer or terminal disturbing). 1. To enable the test for a particular station, enter **change station extension** and set the ‘Test?’ field on the ‘Station Form’ to ‘y.’

Continued on next page

Table 10-32. TEST #6 NPE Crosstalk Test — *Continued*

Error Code	Test Result	Description/Recommendation
1020	ABORT	The test did not run due to a previously existing error on the specific port or a more general circuit pack error. 1. Examine Error Log for existing errors against this port or the circuit pack and attempt to diagnose the previously existing error.
2000	ABORT	Response to the test request was not received within the allowable time period.
2100	ABORT	System resources required to run this test are not available. Either a system allocation to get information about the port or to put the port into a service state failed or the attempt to put the port in connection with a tone source failed (this could be a tone-clock problem). The tone-clock and tone detectors could be having a communication problem, for example, the companding modes could be out of synchronization. 1. Retry the command at 1-minute intervals a maximum of 5 times.

Continued on next page

Table 10-32. TEST #6 NPE Crosstalk Test — *Continued*

Error Code	Test Result	Description/Recommendation
Any	FAIL	This test can fail due to on-board or off-board problems. Off-board problems of concern include EXP-INTF faults, TDM-BUS faults, and faults associated with the tone detectors/tone generators. Clear all off-board problems before replacing the board. Keep in mind that a TDM-BUS problem is usually the result of a faulty board connected to the backplane or bent pins on the backplane. 1. Look for EXP-INTF errors in the error log. If present, refer to the EXP-INTF Maintenance documentation. 2. Look for TDM-BUS errors in the error log. If present, refer to the TDM-BUS Maintenance documentation. 3. Look for TONE-BD and/or TONE-PT errors in the error log. If present, refer to the TONE-BD Maintenance documentation and the TONE-PT Maintenance documentation. 4. Test the board when the faults from steps 1, 2, and 3 are cleared. Replace the board only if the test fails.
	PASS	The port is correctly using its allocated time slots. User-reported troubles on this port should be investigated by using other port tests, by examining station wiring, by examining the station, and by ensuring that the terminal is correctly translated as off-premises or on-premises. **NOTE:** This test always passes for Analog circuit packs TN712 prior to Vintage 14 and TN742 prior to Vintage 4.

Continued on next page

Table 10-32. TEST #6 NPE Crosstalk Test — *Continued*

Error Code	Test Result	Description/Recommendation
0	NO BOARD	The test could not relate the internal ID to the port (no board). This could be due to incorrect translations, no board is inserted, an incorrect board is inserted, or an insane board is inserted. 1. Check to ensure that the board translations are correct. Use the **list config** command, and resolve any problems that are found. 2. If the board was found to be correctly inserted in step 1, issue the **busyout board** command. 3. Issue the **reset board** command. 4. Issue the **release busy board** command. 5. Issue the **test board long** command. This should re-establish the linkage between the internal ID and the port. If this is not the case, dispatch to check to ensure that there is a valid board inserted.

Battery Feed Test (also called Port Diagnostic Test) (#35)

The battery feed chip provides power to the telephone equipment, signaling, rotary dial pulsing, transmission, and balance. This test checks the signaling and switchhook capabilities of the battery feed chip by terminating the port, applying battery, and trying to detect a current.

Table 10-33. TEST #35 Battery Feed Test

Error Code	Test Result	Description/Recommendation
	ABORT	Could not allocate the necessary system resources to run this test. 1. Retry the command at 1-minute intervals a maximum of 5 times.
1000	ABORT	System resources required to run this test are not available. The port may be busy with a valid call. Use the **display port PCSSpp** command to determine the station extension. Use the **status station** command to determine the service state of the port. If the service state indicates that the port is in use, then the port is unavailable for certain tests. You must wait until the port is idle before retesting. 1. If the port status is idle, then retry the command at 1-minute intervals a maximum of 5 times.
1004	ABORT	System resources required to run this test are not available. The port may be busy with a valid call. Use the **display port PCSSpp** command to determine the station extension. Use the **status station** command to determine the service state of the port. If the service state indicates that the port is in use, then the port is unavailable for certain tests. You must wait until the port is idle before retesting. 1. Retry the command at 1-minute intervals a maximum of 5 times. 2. If the test continues to abort and the port is not in use, escalate the problem.
1005	ABORT	The test was aborted due to a configuration problem. This code will result under either of the following conditions: 1. This test may not be applicable, or it may be disruptive to terminal equipment other than a voice terminal (for example, the modem pool member or music on hold). 2. The circuit pack is one of the following: — TN742 vintages 13,14 and 15 — TN769 vintages 3,4 and 5

Continued on next page

Table 10-33. TEST #35 Battery Feed Test — *Continued*

Error Code	Test Result	Description/Recommendation
1018	ABORT	Test disabled via administration. The default for the 'Test' field on the 'Station' form is 'y'; thus, you may want to determine why this field has been set to 'n' on this station (this may be due to the ringing application test 48, which can be customer or terminal disturbing). 1. To enable the test for a particular station, enter **change station extension** and set the 'Test?' field on the 'Station Form' to 'y.'
2000	ABORT	Response to the test request was not received within the allowable time period.
2100	ABORT	System resources required to run this test are not available. Either a system allocation to get information about the port or to put the port into a service state failed or the attempt to put the port in connection with a tone source failed (this could be a tone-clock problem). The tone-clock and tone detectors could be having a communication problem, for example, the companding modes could be out of synchronization. 1. Retry the command at 1-minute intervals a maximum of 5 times.

Continued on next page

Table 10-33. TEST #35 Battery Feed Test — *Continued*

Error Code	Test Result	Description/Recommendation
	FAIL	The port's battery feed chip is unable to supply sufficient power to the terminal equipment. This may occur when the test is performed at the same time that the terminal equipment goes off-hook. 1. Use **status station** to determine when the port is available for testing. When the port becomes available for testing, retry the command at 1-minute intervals a minimum of 5 times. 2. If the test continues to fail, determine whether the customer is experiencing problems on this line. Replace the circuit pack only if the customer is experiencing problems.
	PASS	The port's battery feed chip is able to provide power to the station equipment to detect on-/off-hook. However, the battery feed chip may still be unable to provide power for touch-tones. If tones are heard when buttons are pressed, then the battery feed chip is functioning correctly; otherwise, replace the circuit pack because this port is defective. User-reported troubles on this port should be investigated by using other port tests, by examining station wiring, by examining the station, and by ensuring that the terminal is correctly translated as off-premises or on-premises. **NOTE:** This test always passes for TN712 Analog circuit packs prior to Vintage 14 and TN742 prior to Vintage 6.
0	NO BOARD	The test could not relate the internal ID to the port (no board). This could be due to incorrect translations, no board is inserted, an incorrect board is inserted, or an insane board is inserted. 1. Check to ensure that the board translations are correct. Use the **list config** command, and resolve any problems that are found. 2. If the board was found to be correctly inserted in step 1, issue the **busyout board** command. 3. Issue the **reset board** command. 4. Issue the **release busy board** command. 5. Issue the **test board long** command. This should re-establish the linkage between the internal ID and the port. If this is not the case, dispatch to check to ensure that there is a valid board inserted.

Station Status and Translation Audits and Updates Test (#36)

This test updates the analog port's message lamp state (if it has one) and translations (such as station type, dial type, network connection) with information kept in the software. The software is updated with the switchhook state reported by the port processor. When the ringer is in the off state, this test also turns off the station's ringer to prevent constant ringing caused by defective hardware.

Table 10-34. TEST #36 Station Status and Translation Audits and Updates Test

Error Code	Test Result	Description/Recommendation
	ABORT	Could not allocate the necessary system resources to run this test.
1004	ABORT	System resources required to run this test are not available. The port may be busy with a valid call. Use the **display port PCSSpp** command to determine the station extension. Use the **status station** command to determine the service state of the port. If the service state indicates that the port is in use, then the port is unavailable for certain tests. You must wait until the port is idle before retesting. 1. Retry the command at 1-minute intervals a maximum of 5 times. 2. If the test continues to abort and the port is not in use, escalate the problem.
1005	ABORT	The test was aborted due to a configuration problem. This code will result under either of the following conditions: 1. This test may not be applicable, or it may be disruptive to terminal equipment other than a voice terminal (for example, the modem pool member or music on hold). 2. The circuit pack is one of the following: — TN742 vintages 13,14 and 15 — TN769 vintages 3,4 and 5

Continued on next page

Table 10-34. TEST #36 Station Status and Translation Audits and Updates Test *— Continued*

Error Code	Test Result	Description/Recommendation
1006	ABORT	This port has been busied out by command or taken out-of-service by the failure of the NPE Crosstalk Test. 1. Look in the Error Log for Error Type 18 (port busied out) for this port. If this error is present, then release the port with the **release station extension** command and run the test again. 2. Look in the Error Log for Error Type 1025 (NPE Crosstalk Test failed) for this port. If this error is present, then investigate the errors associated with the NPE Crosstalk Test (#6) first. 3. Make sure that the terminal is connected and in service, and then retest.
	ABORT	Could not allocate the necessary system resources to run this test.
2000	ABORT	Response to the test request was not received within the allowable time period.
2100	ABORT	Could not allocate the necessary system resources to run this test. 1. Retry the command at 1-minute intervals a maximum of 5 times.
1	FAIL	This does not indicate a hardware problem. The switchhook audit failed, and the other updates were not performed because of this failure. This condition may occur when the audit is performed at the same time that the terminal equipment goes off-hook. Use the **status station** command to determine when the port is available for testing. 1. When the port becomes available for testing, retry the command at 1-minute intervals a maximum of 5 times.
5	FAIL	This does not indicate a hardware problem but may indicate an internal software error. The message waiting lamp update failed. The translation and ringer updates were not performed because of this failure.
7	FAIL	The translation update failed. The ringer update was not performed because of this failure. This does not indicate a hardware problem but may be an internal software error.

Continued on next page

Table 10-34. TEST #36 Station Status and Translation Audits and Updates Test — *Continued*

Error Code	Test Result	Description/Recommendation
8	FAIL	This does not indicate a hardware problem but may be an internal software error. The ringer update failed. 1. Retry the command at 1-minute intervals a maximum of 5 times.
	PASS	The software and the port processor have the same status. User-reported troubles on this port should be investigated by using other port tests, by examining station wiring, by examining the station, and by ensuring that the terminal is correctly translated as off-premises or on-premises. **NOTE:** This test always passes for TN712 Analog circuit packs prior to Vintage 14 and TN742 circuit packs prior to Vintage 6.
0	NO BOARD	The test could not relate the internal ID to the port (no board). This could be due to incorrect translations, no board is inserted, an incorrect board is inserted, or an insane board is inserted. 1. Check to ensure that the board translations are correct. Use the **list config** command, and resolve any problems that are found. 2. If the board was found to be correctly inserted in step 1, issue the **busyout board** command. 3. Issue the **reset board** command. 4. Issue the **release busy board** command. 5. Issue the **test board long** command. This should re-establish the linkage between the internal ID and the port. If this is not the case, dispatch to check to ensure that there is a valid board inserted.

Loop Around and Conference Test (#47)

Each Analog Port consists of:

- an NPE for port connectivity and gain, and conferencing functionality
- a code that converts the digital signals of the TDM Bus to analog signals
- a battery feed chip that provides power to the telephone set for signaling, dial pulsing, transmission, and balance.

This test is designed to check the on-board transmission capabilities of the NPE, the code, and the battery feed chip of the Analog Port. A Tone Detector and a Tone Generator talk and listen on the same pair of time slots as the Analog Port. The Analog Port is then instructed to go into loop around mode (see Figure 10-2). The test passes if the signal measured by the Tone Detector is within acceptable limits.

The Conference Circuit Test verifies that the NPE channel for the port being tested can correctly perform the conferencing function. As part of Test #47, the operation of the port conference circuits in the NPE for three and four parties is also tested. In addition, a test is run to measure noise. The NPE is instructed to listen to several different tones and conference the tones together. The resulting signal is then measured by a Tone Detector port. If the level of the tone is within a certain range, the test passes.

The noise test is performed by filtering out the tone, and then measuring inherent port noise.

NOTE:
This Loop Around Test is sensitive to the length of the loop, the equipment in the loop, or the equipment terminating the loop, such as off-premises stations. If this test is causing a false alarm, then disable the test by changing the `Tests` field to **n** using the **change station** command for this station.

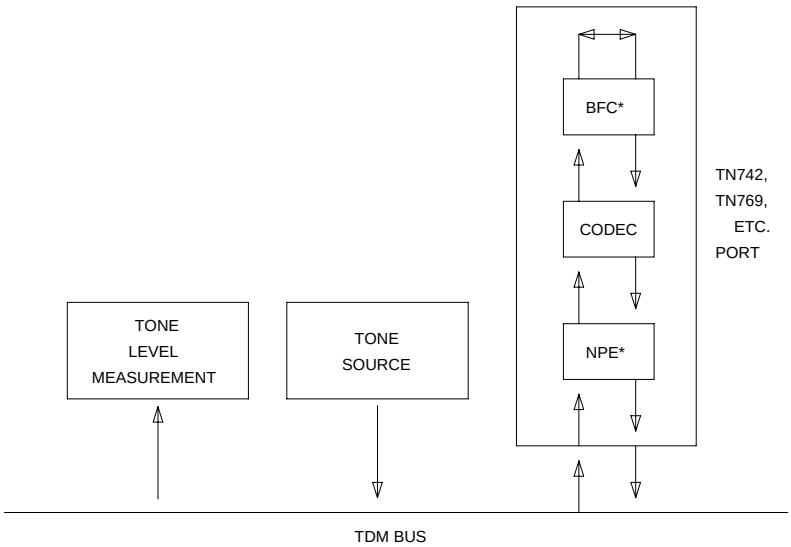

* BFC - BATTERY FEED AND HYBRID CHIP
NPE - NETWORK PROCESSING ELEMENT

Figure 10-3. Analog Loop Around and Conference Test

Table 10-35. TEST #47 Loop Around and Conference Test

Error Code	Test Result	Description/Recommendation
	ABORT	Could not allocate the necessary system resources to run this test. 1. Retry the command at 1-minute intervals a maximum of 5 times.
7	ABORT	The port was seized by a user for a valid call. 1. Enter **display port PCSSpp** to determine the station's extension. Enter **status station extension** to determine the service state of the port. If the port is in use, it will be unavailable for certain tests. Wait until the port is idle before retesting. 2. If the port is idle, retry the command at 1-minute intervals up to 5 times.
1000	ABORT	System resources required to run this test were not available. The port may be busy with a valid call. (This could be a Music-on-Hold port.) 1. Enter **display port PCSSpp** to determine the station's extension. Enter **status station extension** to determine the service state of the port. If the port is in use, it will be unavailable for certain tests. Wait until the port is idle before retesting. 2. If the port is idle, retry the command at 1-minute intervals up to 5 times.
1002	ABORT	The system could not allocate time slots for the test. The system may be under heavy traffic conditions or it may have time slots out-of-service due to TDM-BUS errors. Refer to "TDM-BUS (TDM Bus)" Maintenance documentation to diagnose any active TDM-BUS errors. 1. If system has no TDM-BUS errors and is not handling heavy traffic, repeat test at 1-minute intervals a maximum of 5 times.

Continued on next page

Table 10-35. TEST #47 Loop Around and Conference Test — *Continued*

Error Code	Test Result	Description/Recommendation
1003	ABORT	The system could not allocate a tone receiver for the test. The system may be oversized for the number of Tone Detectors present or some Tone Detectors may be out-of-service. 1. Look for TTR-LEV errors in the Error Log. If present, refer to “TTR-LEV (TTR Level)” Maintenance documentation. 2. Look for TONE-PT errors in the Error Log. If present, refer to “TONE-PT (Tone Generator)” Maintenance documentation. 3. If neither condition exists, retry the test at 1-minute intervals a maximum of 5 times.
1004	ABORT	The port has been seized for a valid call during the conference or noise test. Use the **status station** command to determine when the port is available for testing. 1. If the circuit pack is a TN742 with vintage 10 or less, this test is not valid. Otherwise, proceed with #2. 2. When the port is available for testing, retry the command at 1-minute intervals, a maximum of 5 times. 3. If the test continues to abort and the port is not in use, escalate the problem.
1005	ABORT	The test was aborted due to a configuration problem. This code will result under either of the following conditions: 1. This test may not be applicable, or it may be disruptive to terminal equipment other than a voice terminal (for example, the modem pool member or music on hold). 2. The circuit pack is one of the following: — TN742 vintages 13,14 and 15 — TN769 vintages 3,4 and 5
1018	ABORT	Test disabled via administration. The default for the 'Test' field on the 'Station' form is 'y'; thus, you may want to determine why this field has been set to 'n' on this station (this may be due to the ringing application test 48, which can be customer or terminal disturbing). 1. To enable the test for a particular station, enter **change station** extension and set the ‘Test?’ field on the ‘Station Form’ to ‘y.’

Continued on next page

Table 10-35. TEST #47 Loop Around and Conference Test — *Continued*

Error Code	Test Result	Description/Recommendation
2000	ABORT	Response to the test request was not received within the allowable time period.
2100	ABORT	System resources required to run this test are not available. Either a system allocation to get information about the port or to put the port into a service state failed or the attempt to put the port in connection with a tone source failed (this could be a tone-clock problem). The tone-clock and tone detectors could be having a communication problem, for example, the companding modes could be out of synchronization. 1. Retry the command at 1-minute intervals a maximum of 5 times.
7	FAIL	The conference test or the noise test failed. This could cause noisy or unreliable connections, or users calling this port may hear an echo. The problem can also be off-board, as described below.
13		The reflective loop around with gain set to low and the 600-ohm balance failed. This will cause noisy or unreliable connections.
14		The reflective loop around test (with the gain set to high, using RC balance) failed. This could cause noisy or unreliable connections. The problem can also be off-board, as described below.
15		The nonreflective loop around test failed. This could cause noisy or unreliable connections, or users calling this port may hear an echo. The problem can also be off-board, as described below. *More information continues on the next page.*

Continued on next page

Table 10-35. TEST #47 Loop Around and Conference Test — *Continued*

Error Code	Test Result	Description/Recommendation
7 13 14 15 *(cont'd.)*	FAIL *(cont'd.)*	1. Disconnect the terminal equipment from the circuit pack at the cross-connect and run the test again. 2. If the test fails again, replace the circuit pack and reconnect the terminal equipment. If the test passes the second time, then the test results were affected by the terminal equipment connected to the port; in this case, ignore the results of this test if all other tests pass or abort and the station is operating properly. Failure of test 47 does not cause an alarm. If there are failures of other tests, then investigate those errors. User reported troubles with this port should be investigated by using other port tests, by examining station wiring, and by examining the station to ensure that it is correctly translated as off-premises or on-premises. **NOTE:** If the loop around and conference circuit test fails for all ports on a circuit pack, a -5 volt power problem is indicated. If a TN736 or TN752 power unit circuit pack is present, either the 631DB AC power unit or the 676B DC power unit may be defective. (The 631DB power unit is used in a medium cabinet powered by an AC source. The 645B power unit is used in a medium cabinet powered by a DC power source.) The system may contain a TN736 or TN752 power unit circuit pack or a 631DB AC power unit, but not both types of power units. To investigate problems with a 631DB AC power unit, refer to the CARR-POW (carrier port power unit for AC-powered systems) Maintenance documentation. To investigate problems with a 645B DC power unit, refer to the CARR-POW (carrier port power unit for DC-powered systems) Maintenance documentation. If a red LED on TN736 or TN752 power unit circuit pack is on, replace the pack. If the test fails on more than 1 port, check for errors on the TONE-BD or the TONE-PT. If errors, take appropriate actions. When the tone errors are cleared, rerun the test.

Continued on next page

Table 10-35. TEST #47 Loop Around and Conference Test — *Continued*

Error Code	Test Result	Description/Recommendation
	PASS	The port is able to provide an analog transmission path to the station equipment. User-reported troubles on this port should be investigated by using other port tests, by examining station wiring, by examining the station, and by ensuring that the terminal is correctly translated as off-premises or on-premises. **NOTE:** This test always passes for TN712 Analog circuit packs prior to Vintage 14 and TN742 circuit packs prior to Vintage 6.
0	NO BOARD	The test could not relate the internal ID to the port (no board). This could be due to incorrect translations, no board is inserted, an incorrect board is inserted, or an insane board is inserted. 1. Check to ensure that the board translations are correct. Use the **list config** command, and resolve any problems that are found. 2. If the board was found to be correctly inserted in step 1, issue the **busyout board** command. 3. Issue the **reset board** command. 4. Issue the **release busy board** command. 5. Issue the **test board long** command. This should re-establish the linkage between the internal ID and the port. If this is not the case, dispatch to check to ensure that there is a valid board inserted.

Station Present Test (also called Ringing Application Test) (#48)

This test provides a burst of ringing current to the terminal equipment and detects that current flows. This test is to ascertain whether or not terminal equipment is connected to the port.

This test may cause some terminal equipment to ring briefly during daily maintenance. If this ringing is disturbing the customer or the terminal equipment, it should be disabled using the Tests field of the station administration screen. However, on some releases of the software, this action disables Tests #6, #47, and #35 as well as Test #48.

Table 10-36. TEST #48 Station Present Test

Error Code	Test Result	Description/Recommendation
	ABORT	Could not allocate the necessary system resources to run this test. 1. Retry the command at 1-minute intervals a maximum of 5 times.
1000	ABORT	System resources required to run this test were not available. The port may be busy with a valid call. Use the **display port PCSSpp** to determine the station's extension. Enter **status station** extension to determine the service state of the port. If the port is in use, it will be unavailable for certain tests. Wait until the port is idle before retesting. 1. If the port is idle, retry the command at 1-minute intervals up to 5 times. 2. Check for phone left off-hook or for wiring problems.
1004	ABORT	System resources required to run this test are not available. The port may be busy with a valid call. Use the **display port PCSSpp** command to determine the station extension. Use the **status station** command to determine the service state of the port. If the service state indicates that the port is in use, then the port is unavailable for certain tests. You must wait until the port is idle before retesting. 1. Retry the command at 1-minute intervals a maximum of 5 times. 2. If the test continues to abort and the port is not in use, escalate the problem.
1005	ABORT	The test was aborted due to a configuration problem. This code will result under either of the following conditions: 1. This test may not be applicable, or it may be disruptive to terminal equipment other than a voice terminal (for example, the modem pool member or music on hold). 2. The circuit pack is one of the following: — TN742 vintages 13,14 and 15 — TN769 vintages 3,4 and 5

Continued on next page

Table 10-36. TEST #48 Station Present Test — *Continued*

Error Code	Test Result	Description/Recommendation
1008	ABORT	Could not allocate a ringing circuit for one of the following reasons: ■ All the ringing circuits are in use, or ■ The ringing generator is defective, or ■ It is not wired correctly. 1. Retry the command at 1-minute intervals a maximum of 5 times. 2. If the test continues to abort, look for RING-GEN errors in the Error Log. If an ABORT 1008 occurs for Test #48 on other circuit packs as well, then the ringing generator may be defective or not wired correctly. If it does not occur on other ports, then that circuit pack is currently using all four ringing phases.
1018	ABORT	The test was disabled via administration. The default for the 'Test' field on the 'Station' form is 'y'; thus, you may want to determine why this field has been set to 'n' on this station (this may be due to the ringing application test 48, which can be customer or terminal disturbing). 1. To enable the test for a particular station, enter **change station** extension and set the 'Test?' field on the 'Station Form' to 'y.'
2000	ABORT	Response to the test request was not received within the allowable time period.
2100	ABORT	System resources required to run this test are not available. Either a system allocation to get information about the port or to put the port into a service state failed or the attempt to put the port in connection with a tone source failed (this could be a tone-clock problem). The tone-clock and tone detectors could be having a communication problem, for example, the companding modes could be out of synchronization. 1. Retry the command at 1-minute intervals a maximum of 5 times.

Continued on next page

Table 10-36. TEST #48 Station Present Test — *Continued*

Error Code	Test Result	Description/Recommendation
	FAIL	The terminal equipment is not connected to the circuit pack or the ringing generator may have failed. 1. Remotely test the equipment. 2. If the test fails again, look for RING-GEN errors in the error log. If present, refer to the RING-GEN (analog ring generator) Maintenance documentation. 3. Check all of the wiring between the station equipment and the switch. Then, run the test again. 4. If the test still fails, the set may be defective. Check the set, and replace it, if necessary. 5. Some terminal equipment (such as a modem) could fail even when it is connected properly. If this is the case, disable the test using the **change station extension** command (enter 'n' into the 'Test' field). Note that this action also disables tests 6, 7, 161, and 35 on this port.
	PASS	The station is connected properly to the switch. This test may also pass if no terminal equipment is connected and the terminal is located far from the switch (that is, it is off-premises). User-reported troubles on this port should be investigated by using other port tests, by examining station wiring, by examining the station, and by ensuring that the terminal is correctly translated as off-premises or on-premises. **NOTE:** This test always passes for TN712 Analog circuit packs prior to Vintage 14 and TN742 circuit packs prior to Vintage 6.

Continued on next page

Table 10-36. TEST #48 Station Present Test — *Continued*

Error Code	Test Result	Description/Recommendation
0	NO BOARD	The test could not relate the internal ID to the port (no board). This could be due to incorrect translations, no board is inserted, an incorrect board is inserted, or an insane board is inserted. 1. Check to ensure that the board translations are correct. Use the **list config** command, and resolve any problems that are found. 2. If the board was found to be correctly inserted in step 1, issue the **busyout board** command. 3. Issue the **reset board** command. 4. Issue the **release busy board** command. 5. Issue the **test board long** command. This should re-establish the linkage between the internal ID and the port. If this is not the case, dispatch to check to ensure that there is a valid board inserted.

AN-LN-PT (Analog Line Port)

MO Name (in Alarm Log)	Alarm Level	Initial Command to Run[1]	Full Name of MO
AN-LN-PT	MIN	test port UUCSSpp l	Analog Line Port
AN-LN-PT	WRN	test port UUCSSpp sh	Analog Line Port

1 UU is the universal cabinet number (1 for PPN, 2 -3 for EPNs). C is the carrier designation (A, B, C, D, or E). SS is the number of the slot in which the circuit pack resides (01 to 21). pp is the two digit port number (01, 02, etc.).

The TN793B/TN2793B Analog Line circuit pack (w/ Caller ID), and the TN797 Analog Trunk and Line circuit pack both support this Maintenance Object.

The TN793B/TN2793B Analog Line circuit pack (w/ Caller ID) provides 24 ports for voice terminals and supports both on-premises and off-premises analog voice terminals.

The TN797 Analog Trunk and Line circuit pack provides 8 ports, each of which may be administered in any of several ways, as described in maintenance object TR-LN-BD.

NOTE:
The TN793B/TN2793B analog line circuit pack supports analog data modules. When assigned, analog data modules provide access to the NetPkt (TN2401/TN794 circuit pack) data ports. To activate an analog data module you must assign the port location on the data form and connect a modem to the port. The analog data module can be used for connection to a CDR output, or other adjuncts as needed. These ports are tested the same as all other analog ports on the circuit pack.

Ringing caused by maintenance testing

Test #48 may cause some terminal equipment to ring briefly during daily maintenance. If this ringing disturbs the customer or the terminal equipment, disable it in the `Tests` field of the **change station *extension*** form. Be aware that this action also disables Tests #6, 7, 161, and 35 on some software releases.

Error log entries and test to clear values

Table 10-37. Analog line error log entries

Error Type	Aux Data	Associated Test	Alarm Level	On/Off Board	Test to Clear Value
0[1]	0	Any	Any	Any	test port UUCSSpp sh r 1
1(a)	40960 40975 40977	none			
15(b)	Any	Audits and Updates Test (#36)			
18	0	busy station *extension*	WRN	ON	release station *extension*
130(c)		None	WRN	ON	test port UUCSSpp sh
257(d)	40973	none			
513(e)		Station Present Test (#48)	WRN	OFF	test port UUCSSpp sh r 2
769		Battery Feed Test (#35)	MIN/ WRN[2]	ON	test port UUCSSpp sh r 2
1025		Looparound Test (#161)	MIN/ WRN[2]	ON	test port UUCSSpp l r 2
1281		Conference Test (#7)	MIN/ WRN[2]	ON	test port UUCSSpp l r 2
1537		NPE Crosstalk Test (#6)	MIN/ WRN[2]	ON	test port UUCSSpp l r 2

1 Run the Short Test Sequence first. If all tests pass, run the Long Test Sequence. Refer to the appropriate test description and follow the recommended procedures.

2 Minor alarms on this MO may be downgraded to Warning alarms based on the values used in the **set options** command.

Notes:

a. **Error Type 1**: these are in-line errors and can only be resolved over time.

- Aux Data 40960 indicates that too many simultaneous incoming ringing attempts were made on this board. Only 4 ports on a board may ring simultaneously. A 5th incoming call will cause an inline error from the board.
- Aux Data 40975 indicates that the terminal equipment was on-hook when ring-tip was detected during ringing. This usually indicates a failure in the terminal equipment or the type of terminal has a low ringer impedance.

1. Call the terminal equipment and verify that the terminal rings.
2. If the terminal does not ring, then replace it.
3. Otherwise, issue the **test port UUCSSpp** command, and follow the procedure for Test #48.

- 40977 indicates that no terminal equipment was connected when ringing was attempted.

  1. Run the short test via the **test port UUCSSpp** command, and follow the procedure for the results of Test #48.

b. **Error Type 15**: this is a software audit error that does not indicate any hardware malfunction.

   1. Run the Short Test Sequence and investigate any associated errors.

c. **Error Type 130**: this error type indicates that the circuit pack has been removed or has been insane for more than 11 minutes.

   1. To clear the error, reseat or replace the circuit pack.

d. **Error Type 257**: this is an in-line error and can only be resolved over time. This error indicates that ringing voltage is absent.

   1. If only 1 analog circuit pack in the system has this problem, replace the circuit pack.
   2. If only analog circuit packs on a particular carrier have this error, the ringing generator may not be connected to this carrier.
   3. If analog circuit packs on many carriers have this error, it is probably a problem with the ringing generator.

e. **Error Type 513**:Test #48 can cause some terminal equipment to ring briefly during daily maintenance.

   1. If this disturbs the customer or the terminal equipment, disable it by setting the `Tests` field on the **change station *extension*** form to **n**. On some software releases, this also disables Tests #6, 7, 161, and 35.

System technician-demanded tests: descriptions and error codes

Always investigate tests in the order presented in the table below when inspecting errors in the system. By clearing error codes associated with the *Battery Feed Test,* for example, you may also clear errors generated from other tests in the testing sequence.

Order of Investigation	Short Test Sequence	Long Test Sequence	D/ND[1]
Battery Feed Test (#35)	X	X	ND
Station Present Test (#48)	X	X	ND
Looparound Test (#161)		X	ND
Conference Test (#7)		X	ND
NPE Crosstalk Test (#6)		X	ND
Station Status and Translation Audits and Updates Test (#36)	X	X	ND

1 D = Destructive; ND = Nondestructive

NPE Crosstalk Test (#6)

This test verifies that the port's NPE channel talks on the selected time slot and never crosses over to time slots reserved for other connections. If the NPE is not working correctly, one-way and noisy connections may be observed. This test is usually part of the long test sequence and takes about 20 to 30 seconds to complete.

Table 10-38. TEST #6 NPE Crosstalk Test

Error Code	Test Result	Description/Recommendation
	ABORT	Necessary system resources could not be allocated to run this test. 1. Retry the command at 1-minute intervals no more than 5 times. 2. If the test continues to abort, escalate the problem.
1000	ABORT	System resources are unavailable. The port may be busy with a valid call. This result is also reported for the system's Music-On-Hold port when it is off-hook, which it usually is. 1. Enter **display port UUCSSpp** to determine the station's extension. 2. Enter **status station *extension*** to determine the service state of the port. 3. If the port is in use, wait until the port is idle. Retry the command at 1-minute intervals no more than 5 times. 4. If the test continues to abort, escalate the problem.
1001	ABORT	System resources required to run test are not available. This could be due to a failure to seize the port. 1. Retry the command at 1-minute intervals no more than 5 times. 2. If the test continues to abort, escalate the problem.
1002	ABORT	The system could not allocate time slots for the test. The system may be under heavy traffic conditions or have time slots out-of-service due to TDM-BUS errors. 1. Refer to "TDM-BUS" to diagnose any active TDM-BUS errors. 2. If the system has no TDM-BUS errors and is not handling heavy traffic, retry the command at 1-minute intervals no more than 5 times. 3. If the test continues to abort, escalate the problem.

Continued on next page

Table 10-38. TEST #6 NPE Crosstalk Test — *Continued*

Error Code	Test Result	Description/Recommendation
1003	ABORT	The system could not allocate a tone receiver for the test. The system may be oversized for the number of tone detectors present or some tone detectors may be out-of-service. 1. Resolve any TTR-LEV errors in the Error Log. 2. Resolve any TONE-PT errors in the Error Log. 3. If neither condition exists, retry the command at 1-minute intervals no more than 5 times. 4. If the test continues to abort, escalate the problem.
1004	ABORT	A valid call seized the port during the test and aborted the test. 1. Use the **display port UUCSSpp** command to determine the station extension. 2. Use the **status station *extension*** command to determine the service state of the port. 3. If the port is in use, wait until the port is idle before testing. Retry the command at 1-minute intervals no more than 5 times. 4. If the test continues to abort, escalate the problem.
1005	ABORT	This test was aborted due to a configuration problem. The test is not applicable for this type of analog port. This error can be ignored.
1018	ABORT	Administration has disabled the test. The default for the `Test?` field on the station form is **y**. Determine why this field has been set to **n** on this station (this may be due to the ringing application Test #48, which can be disturbing to customer or terminal equipment). 1. To enable the test for a particular station being tested, enter **change station *extension***. 2. Change the `Test?` field on the station form to **y**.
2000	ABORT	Response to the test request was not received within the allowable time period.
2100	ABORT	System resources required to run test are not available. This could be due to a failure to seize the port. 1. Retry the command at 1-minute intervals no more than 5 times. 2. If the test continues to abort, escalate the problem.

Continued on next page

Table 10-38. TEST #6 NPE Crosstalk Test — *Continued*

Error Code	Test Result	Description/Recommendation
Any	FAIL	This test can fail due to on-board or off-board problems. Off-board problems include TDM-BUS faults, EXP-PN and EXP-INTF faults, and faults associated with the tone detectors/tone generators. Clear all off-board problems before replacing the board. 1. A TDM-BUS problem is usually the result of a faulty board connection to the backplane, or bent pins on the backplane. Resolve any TDM-BUS errors in the error log. 2. Resolve any EXP-PN and/or EXP-INTF errors in the error log. 3. Resolve any TONE-BD and/or TONE-PT errors in the error log. 4. Test the board when the faults from Steps 1, 2, and 3 are cleared. Replace the board only if the test fails.
	PASS	The port is correctly using its allocated time slots. Investigate user-reported troubles on this port by running other port tests, by examining station wiring, or by inspecting the station.
0	NO BOARD	The test could not relate the internal ID to the port (no board). This result could be due to incorrect translations, no board is inserted, an incorrect board is inserted, or an insane board is inserted. 1. Check to make sure that the board translations are correct. Use the **list configuration** command, and resolve any problems. 2. If the board is correctly inserted, issue the **busy board UUCSS** command. 3. Issue the **reset board UUCSS** command. 4. Issue the **release board UUCSS** command. 5. Issue the **test board UUCSS long** command. This re-establishes the link between the internal ID and the port. 6. If this is not the case, check to make sure that a valid board is inserted.

Conference Circuit Test (#7)

This test verifies that the NPE channel for the port being tested correctly performs the conferencing function.

Table 10-39. TEST #7 Conference Circuit Test

Error Code	Test Result	Description/Recommendation
	ABORT	Necessary system resources could not be allocated to run this test. 1. Retry the command at 1-minute intervals no more than 5 times. 2. If the test continues to abort, escalate the problem.
1000	ABORT	System resources are unavailable. The port may be busy with a valid call. This result is also reported for the system's Music-On-Hold port when it is off-hook, which it usually is. 1. Enter **display port UUCSSpp** to determine the station's extension. 2. Enter **status station *extension*** to determine the service state of the port. 3. If the port is in use, wait until the port is idle. Retry the command at 1-minute intervals no more than 5 times. 4. If the test continues to abort, escalate the problem.
1004	ABORT	A valid call seized the port during the test and aborted the test. 1. Use the **display port UUCSSpp** command to determine the station extension. 2. Use the **status station *extension*** command to determine the service state of the port. 3. If the port is in use, wait until the port is idle before testing. Retry the command at 1-minute intervals no more than 5 times. 4. If the test continues to abort, escalate the problem.
1005	ABORT	This test was aborted due to a configuration problem. The test is not applicable for this type of analog port. This error can be ignored.
1018	ABORT	Administration has disabled the test. The default for the `Test?` field on the station form is **y**. Determine why this field has been set to **n** on this station (this may be due to the ringing application Test #48, which can be disturbing to customer or terminal equipment). 1. To enable the test for a particular station being tested, enter **change station *extension***. 2. Change the `Test?` field on the station form to **y**.

Continued on next page

Table 10-39. TEST #7 Conference Circuit Test — *Continued*

Error Code	Test Result	Description/Recommendation
2000	ABORT	Response to the test request was not received within the allowable time period.
2100	ABORT	System resources required to run this test are not available. 1. Resolve any TONE-PT errors in the error log. 2. If there are no TONE-PT errors, retry the command at 1-minute intervals no more than 5 times. 3. If the test continues to abort, escalate the problem.
Any	FAIL	The NPE of the tested port did not conference the tones correctly. This causes noisy and unreliable connections. 1. Issue the **display port UUCSSpp** and the **status station *extension*** commands to determine if the station is idle. 2. If the station is idle, issue the **test port UUCSSpp** command for this port. 3. If the test continues to fail, issue the **busy port UUCSSpp** and the **release port UUCSSpp** commands, and then retest. 4. If the test still fails, replace the board.
	PASS	The port can correctly conference multiple connections. Investigate user-reported troubles on this port by running other port tests; by examining station, trunk, or external wiring; or by inspecting the station.
0	NO BOARD	The test could not relate the internal ID to the port (no board). This result could be due to incorrect translations, no board is inserted, an incorrect board is inserted, or an insane board is inserted. 1. Check to make sure that the board translations are correct. Use the **list configuration** command, and resolve any problems. 2. If the board is correctly inserted, issue the **busy board UUCSS** command. 3. Issue the **reset board UUCSS** command. 4. Issue the **release board UUCSS** command. 5. Issue the **test board UUCSS long** command. This re-establishes the link between the internal ID and the port. 6. If this is not the case, check to make sure that a valid board is inserted.

Battery Feed Test (also called Port Diagnostic Test) (#35)

The battery feed chip provides power to the telephone equipment, signaling, rotary dial pulsing, transmission, and balance. This test checks the signaling and switchhook capabilities of the battery feed chip by terminating the port, applying battery power, and detecting the resulting current.

Table 10-40. TEST #35 Battery Feed Test

Error Code	Test Result	Description/Recommendation
	ABORT	Necessary system resources could not be allocated to run this test. 1. Retry the command at 1-minute intervals no more than 5 times. 2. If the test continues to abort, escalate the problem.
1000	ABORT	System resources are unavailable. The port may be busy with a valid call. This result is also reported for the system's Music-On-Hold port when it is off-hook, which it usually is. 1. Enter **display port UUCSSpp** to determine the station's extension. 2. Enter **status station *extension*** to determine the service state of the port. 3. If the port is in use, wait until the port is idle. Retry the command at 1-minute intervals no more than 5 times. 4. If the test continues to abort, escalate the problem.
1004	ABORT	A valid call seized the port during the test and aborted the test. 1. Use the **display port UUCSSpp** command to determine the station extension. 2. Use the **status station *extension*** command to determine the service state of the port. 3. If the port is in use, wait until the port is idle before testing. Retry the command at 1-minute intervals no more than 5 times. 4. If the test continues to abort, escalate the problem.
1005	ABORT	This test was aborted due to a configuration problem. The test is not applicable for this type of analog port. This error can be ignored.

Continued on next page

Table 10-40. TEST #35 Battery Feed Test — *Continued*

Error Code	Test Result	Description/Recommendation
1018	ABORT	Administration has disabled the test. The default for the `Test?` field on the station form is **y**. Determine why this field has been set to **n** on this station (this may be due to the ringing application Test #48, which can be disturbing to customer or terminal equipment). 1. To enable the test for a particular station being tested, enter **change station *extension***. 2. Change the `Test?` field on the station form to **y**.
1392	ABORT	This port is currently a TTI port and the test does not execute on it. 1. Verify that the port is a TTI port: ■ Enter the **display port UUCSSpp** command (the display shows that the port is a TTI port). ■ Enter the **list configuration** command (the display shows a `t` for the port). 2. If both commands indicate that the port is a TTI port, the abort is correct for the test, and no action is necessary. 3. If either command indicates that the port is *not* a TTI port, escalate the problem.
2000	ABORT	Response to the test request was not received within the allowable time period.
2100	ABORT	System resources required to run this test are not available. 1. Retry the command at 1-minute intervals no more than 5 times. 2. If the test continues to abort, escalate the problem.

Continued on next page

Table 10-40. TEST #35 Battery Feed Test — *Continued*

Error Code	Test Result	Description/Recommendation
	FAIL	The port's battery feed chip is unable to supply sufficient power to the terminal equipment. This test result might be marginal, and the terminal equipment may be operating satisfactorily. 1. Retry the command at 1-minute intervals no more than 5 times. 2. If the test continues to fail, determine whether the customer is experiencing problems on this line. Replace the circuit pack only if the customer is experiencing problems.
	PASS	The port's battery feed chip is able to provide sufficient power to the station equipment to detect on-/off-hook, but may not be able to supply power for touch-tones. 1. If touch-tones are inoperative on this station, replace the circuit pack because this port is inoperative. 2. Investigate user-reported troubles on this port by running other port tests, by examining station wiring, or by inspecting the station.
0	NO BOARD	The test could not relate the internal ID to the port (no board). This result could be due to incorrect translations, no board is inserted, an incorrect board is inserted, or an insane board is inserted. 1. Check to make sure that the board translations are correct. Use the **list configuration** command, and resolve any problems. 2. If the board is correctly inserted, issue the **busy board UUCSS** command. 3. Issue the **reset board UUCSS** command. 4. Issue the **release board UUCSS** command. 5. Issue the **test board UUCSS long** command. This re-establishes the link between the internal ID and the port. 6. If this is not the case, check to make sure that a valid board is inserted.

Station Status and Translation Audits and Updates Test (#36)

This test updates the analog port's message lamp state (if it has one) and translations with information in the software.

Table 10-41. Test #36 Station Status and Translation Audits and Updates

Error Code	Test Result	Description/Recommendation
	ABORT	Necessary system resources could not be allocated to run this test. 1. Retry the command at 1-minute intervals no more than 5 times. 2. If the test continues to abort, escalate the problem.
1004	ABORT	A valid call seized the port during the test and aborted the test. 1. Use the **display port UUCSSpp** command to determine the station extension. 2. Use the **status station *extension*** command to determine the service state of the port. 3. If the port is in use, wait until the port is idle before testing. Retry the command at 1-minute intervals no more than 5 times. 4. If the test continues to abort, escalate the problem.
1005	ABORT	This test was aborted due to a configuration problem. The test is not applicable for this type of analog port. This error can be ignored.
1006	ABORT	The port is out-of-service. The **busy station *extension*** command has been given to this port, or it has been taken out-of-service by the failure of the NPE Crosstalk Test. 1. Look for error type 18 (port busied out) for this port. If this error is present, release the port (**release station *extension***), and run the test again. 2. Check for error type 1537 (NPE Crosstalk Test failed) for this port. If this error is present, investigate the errors associated with the NPE Crosstalk Test (#6). 3. Make sure that the terminal is connected and in service, and then retest.
2000	ABORT	Response to the test request was not received within the allowable time period.

Continued on next page

Table 10-41. Test #36 Station Status and Translation Audits and Updates *— Continued*

Error Code	Test Result	Description/Recommendation
2100	ABORT	System resources required to run this test are not available. 1. Retry the command at 1-minute intervals no more than 5 times. 2. If the test continues to abort, escalate the problem.
1	FAIL	The switchhook audit failed. This result does not indicate a hardware problem. The other updates were not performed because of this failure. This may occur if the audit is performed at the same time the terminal equipment goes off-hook. 1. Use the **status station *extension*** command to determine when the port is available. 2. Retry the command at 1-minute intervals no more than 5 times. 3. If the test continues to fail, escalate the problem.
5	FAIL	The message waiting lamp update failed. This may be an internal software error. The translation and ringer updates were not performed because of this failure.
7	FAIL	The translation update failed. There may be an internal software error. The ringer update was not performed because of this failure.

Continued on next page

Table 10-41. Test #36 Station Status and Translation Audits and Updates — *Continued*

Error Code	Test Result	Description/Recommendation
8	FAIL	The ringer update failed. There may be an internal software error. 1. Retry the command at 1-minute intervals no more than 5 times. 2. If the test continues to fail, escalate the problem.
	PASS	The software and the port processor have the same status. Investigate user-reported troubles on this port by running other port tests, by examining station wiring, or by inspecting the station.
0	NO BOARD	The test could not relate the internal ID to the port (no board). This result could be due to incorrect translations, no board is inserted, an incorrect board is inserted, or an insane board is inserted. 1. Check to make sure that the board translations are correct. Use the **list configuration** command, and resolve any problems. 2. If the board is correctly inserted, issue the **busy board UUCSS** command. 3. Issue the **reset board UUCSS** command. 4. Issue the **release board UUCSS** command. 5. Issue the **test board UUCSS long** command. This re-establishes the link between the internal ID and the port. 6. If this is not the case, check to make sure that a valid board is inserted.

Station Present Test (also called Ringing Application Test) (#48)

This test applies momentary ringing voltage to the terminal equipment and monitors resulting current flow to determine whether terminal equipment is connected to the port. This test may cause some terminal equipment to ring briefly during daily maintenance. If this ringing disturbs the customer or the terminal equipment, you can disable it via the `Tests` field on the **change station *extension*** form. However, on some software releases, Tests #6, 7, 161, and 35 also are disabled.

Table 10-42. TEST #48 Station Present Test

Error Code	Test Result	Description/Recommendation
	ABORT	Necessary system resources could not be allocated to run this test. 1. Retry the command at 1-minute intervals no more than 5 times. 2. If the test continues to abort, escalate the problem.
1000	ABORT	System resources are unavailable. The port may be busy with a valid call. This result is also reported for the system's Music-On-Hold port when it is off-hook, which it usually is. 1. Enter **display port UUCSSpp** to determine the station's extension. 2. Enter **status station *extension*** to determine the service state of the port. 3. If the port is in use, wait until the port is idle. Retry the command at 1-minute intervals no more than 5 times. 4. If the test continues to abort, escalate the problem.
1004	ABORT	A valid call seized the port during the test and aborted the test. 1. Use the **display port UUCSSpp** command to determine the station extension. 2. Use the **status station *extension*** command to determine the service state of the port. 3. If the port is in use, wait until the port is idle before testing. Retry the command at 1-minute intervals no more than 5 times. 4. If the test continues to abort, escalate the problem.
1005	ABORT	This test was aborted due to a configuration problem. The test is not applicable for this type of analog port. This error can be ignored.

Continued on next page

Table 10-42. TEST #48 Station Present Test — *Continued*

Error Code	Test Result	Description/Recommendation
1008	ABORT	A ringing circuit could not be allocated. Either all of the ringing circuits are in use, the ringing generator is defective, or it is not wired correctly. 1. Retry the command at 1-minute intervals no more than 5 times. 2. If the test continues to abort, look for RING-GEN errors in the Error Log. 3. If ABORT 1008 occurs for this test on other circuit packs as well, the ringing generator may be defective or is not wired correctly (see RING-GEN). 4. If an ABORT 1008 does not occur on other ports, then all four ring phases are in use.
1018	ABORT	Administration has disabled the test. The default for the `Test?` field on the station form is **y**. Determine why this field has been set to **n** on this station (this may be due to the ringing application Test 48, which can be disturbing to customer or terminal equipment). 1. To enable the test for a particular station being tested, enter **change station *extension***. 2. Change the `Test?` field on the station form to **y**.
2000	ABORT	Response to the test request was not received within the allowable time period.
2100	ABORT	System resources required to run this test are not available. 1. Retry the command at 1-minute intervals no more than 5 times. 2. If the test continues to abort, escalate the problem.

Continued on next page

Table 10-42. TEST #48 Station Present Test — *Continued*

Error Code	Test Result	Description/Recommendation
	FAIL	The terminal equipment is not connected to the circuit pack. Some terminal equipment, such as modems, may fail even when connected properly. 1. Remotely test the terminal equipment. 2. If the test fails again, resolve any RING-GEN errors in the error log, if present. 3. Check all of the wiring between the station equipment and the switch. Then, run the test again. 4. If the test still fails, the terminal equipment may be defective. Check and replace it, if necessary. 5. Some terminal equipment might fail even when it is connected properly. If this is the case, disable the test using the **change station *extension*** command (enter **n** into the `Test` field). Note that this action also disables Tests 6, 7, 35, and 161 on this port.
	PASS	The station is connected properly to the switch. Investigate user-reported troubles on this port by running other port tests, by examining station wiring, or by inspecting the station. **NOTE:** This test may also pass if no terminal equipment is connected and the terminal is located very far from the switch.
0	NO BOARD	The test could not relate the internal ID to the port (no board). This result could be due to incorrect translations, no board is inserted, an incorrect board is inserted, or an insane board is inserted. 1. Check to make sure that the board translations are correct. Use the **list configuration** command, and resolve any problems. 2. If the board is correctly inserted, issue the **busy board UUCSS** command. 3. Issue the **reset board UUCSS** command. 4. Issue the **release board UUCSS** command. 5. Issue the **test board UUCSS long** command. This re-establishes the link between the internal ID and the port. 6. If this is not the case, check to make sure that a valid board is inserted.

Looparound Test (#161)

This test checks the on-board transmission capabilities of the NPE, the codec, and the battery feed chip of the analog port. The test passes if the signal measured by the tone detector is within acceptable limits.

Table 10-43. TEST #161 Looparound Test

Error Code	Test Result	Description/Recommendation
	ABORT	Necessary system resources could not be allocated to run this test. 1. Retry the command at 1-minute intervals no more than 5 times. 2. If the test continues to abort, escalate the problem.
1000	ABORT	System resources are unavailable. The port may be busy with a valid call. This result is also reported for the system's Music-On-Hold port when it is off-hook, which it usually is. 1. Enter **display port UUCSSpp** to determine the station's extension. 2. Enter **status station *extension*** to determine the service state of the port. 3. If the port is in use, wait until the port is idle. Retry the command at 1-minute intervals no more than 5 times. 4. If the test continues to abort, escalate the problem.
1002	ABORT	The system could not allocate time slots for the test. The system may be under heavy traffic conditions or have time slots out-of-service due to TDM-BUS errors. 1. Refer to "TDM-BUS" to diagnose any active TDM-BUS errors. 2. If the system has no TDM-BUS errors and is not handling heavy traffic, retry the command at 1-minute intervals no more than 5 times. 3. If the test continues to abort, escalate the problem.
1003	ABORT	The system could not allocate a tone receiver for the test. The system may be oversized for the number of tone detectors present or some tone detectors may be out-of-service. 1. Resolve any TTR-LEV errors in the Error Log. 2. Resolve any TONE-PT errors in the Error Log. 3. If neither condition exists, retry the command at 1-minute intervals no more than 5 times. 4. If the test continues to abort, escalate the problem.

Continued on next page

Table 10-43. TEST #161 Looparound Test — *Continued*

Error Code	Test Result	Description/Recommendation
1004	ABORT	A valid call seized the port during the test and aborted the test. 1. Use the **display port UUCSSpp** command to determine the station extension. 2. Use the **status station *extension*** command to determine the service state of the port. 3. If the port is in use, wait until the port is idle before testing. Retry the command at 1-minute intervals no more than 5 times. 4. If the test continues to abort, escalate the problem.
1005	ABORT	This test was aborted due to a configuration problem. The test is not applicable for this type of analog port. This error can be ignored.
1018	ABORT	Administration has disabled the test. The default for the `Test?` field on the station form is **y**. Determine why this field has been set to **n** on this station (this may be due to the ringing application Test 48, which can be disturbing to customer or terminal equipment). 1. To enable the test for a particular station being tested, enter **change station *extension***. 2. Change the `Test?` field on the station form to **y**.
2000	ABORT	Response to the test request was not received within the allowable time period.
2100	ABORT	System resources required to run this test are not available. 1. Retry the command at 1-minute intervals no more than 5 times. 2. If the test continues to abort, escalate the problem.

Continued on next page

Table 10-43. TEST #161 Looparound Test — *Continued*

Error Code	Test Result	Description/Recommendation
	FAIL	The reflective Looparound Test failed. This could cause noisy or unreliable connections, or users calling this port may hear an echo. The problem can also be off-board. 1. Since a line seizure may affect the test, repeat the test at 1-minute intervals for no more than 5 times. 2. Using the **test board UUCSS short** command, run circuit pack tests to check the tone generator and the tone detector circuit packs. 3. Resolve any problems on the tone generator or the tone detector circuit packs. 4. If the tone generator and tone detector circuit packs are functioning properly, determine if a voice terminal is connected and wired properly. Resolve any problems found. 5. If the test still fails, replace the analog line circuit pack.
	PASS	The port provides an analog transmission path to the station equipment. Investigate user-reported troubles on this port by running other port tests, by examining station wiring, or by inspecting the station.
0	NO BOARD	The test could not relate the internal ID to the port (no board). This result could be due to incorrect translations, no board is inserted, an incorrect board is inserted, or an insane board is inserted. 1. Check to make sure that the board translations are correct. Use the **list configuration** command, and resolve any problems. 2. If the board is correctly inserted, issue the **busy board UUCSS** command. 3. Issue the **reset board UUCSS** command. 4. Issue the **release board UUCSS** command. 5. Issue the **test board UUCSS long** command. This re-establishes the link between the internal ID and the port. 6. If this is not the case, check to make sure that a valid board is inserted.

ANN-BD (Announcement Circuit Pack)

MO Name (in Alarm Log)	Alarm Level	Initial Command to Run[1]	Full Name of MO
ANN-BD	MINOR	test board PCSS l	Announcement Circuit Pack
ANN-BD	WRN	test board PCSS l	Announcement Circuit Pack

1 Where P is the port network number (1 for PPN and 2 or 3 for EPN); C is the carrier designation (for example, A, B, C, D, or E); and SS is the address of the slot in the carrier where the circuit pack is located (for example, 01, 02, etc.).

The TN750 Announcement circuit pack is a service circuit which provides a DEFINITY Generic 3 customer with an integrated means for recording announcements that can be played back on demand by call processing as part of a calling feature (for example, announcements on hunt group calls). There are 16 Announcement Ports on the Announcement circuit pack. Each port can play any integrated announcement, independently of the other ports. In addition to the 16 Announcement Ports, the Announcement circuit pack also has one Data Line Circuit Port (port 17). The Data Line Circuit Port is used for uploading/downloading the announcement memory to/from the system tape [G3iV1.1-286] or memory card [G3sV2, G3iV2-386, G3vsV2]. If there are any errors associated with port 17, refer to “DAT-LINE (Data Line)” Maintenance documentation. If there are any errors associated with any other port, refer to “ANN-PT (Announcement Port)” Maintenance documentation.

NOTE:
To use multiple announcement boards, you must have G3V4 software or later, and at least one TN750C (up to ten are allowed) or TN2501AP (VAL). Only one TN750A/B may be present in the system when a TN750C is used. The announcements from a TN750A/B can be saved and restored to a TN750C — but once the announcements are recorded onto a TN750C, they are not backward compatible with the TN750A/B.

The Announcement circuit pack has two processors on it. The first processor, or Angel, controls the circuit pack and communicates with the switch via the control channel on the TDM Bus. The second processor, or Speech Processor (SP), controls the speech memory and announcements. Digital speech is converted from its TDM Bus form to an internal storage form (for recording) and vice versa (for playbacks) by the 140AY device on the circuit pack, which has 16 channels (one for each Announcement Port).

General Notes

Here are a few **very important** general notes that apply to any problem on the Announcement circuit pack. The user should read this before attempting to work on the TN750 Announcement circuit pack or Announcement Ports, **especially if the circuit pack needs to be replaced.**

1. The Announcement circuit pack retains all integrated announcements *as long as the circuit pack has power*. For this reason, whenever there is a problem with either the Announcement circuit pack or an Announcement Port that may require the circuit pack to be reset, it is always best to try to reset the circuit pack via the **reset board PCSS** command first. If that does not work, replace the circuit pack. **Announcements are preserved through a software reset, but they are lost when the circuit pack is reseated.**
2. **If a customer has announcements on the Announcement circuit pack that cannot be rerecorded easily, then announcements must be saved on the system tape [G3iV1.1-286] or memory card [G3sV2, G3iV2-386, G3vsV2] to ensure that they are not lost.** This should be done as soon as the announcements are recorded on the circuit pack (or whenever they are changed), assuming that the circuit pack is in proper working order (see Note).

   NOTE:
   Unlike translations, announcements are NEVER automatically saved to the system tape [G3iV1.1-286] or memory card [G3sV2, G3iV2-386, G3vsV2].

3. The administration terminal **save announcements** command replaces the announcement file on the system tape [G3iV1.1-286] or memory card [G3sV2, G3iV2-386, G3vsV2] the Announcement circuit pack speech memory. Care must be taken not to mistakenly enter this command and, as a result, destroy a valid file on the system tape [G3iV1.1-286] or memory card [G3sV2, G3iV2-386, G3vsV2].
4. The **restore announcements** command replaces the Announcement circuit pack speech memory with the announcement file on the system tape [G3iV1.1-286] or memory card [G3sV2, G3iV2-386, G3vsV2]. Care must be taken not to mistakenly enter this command, destroying valid speech memory (especially if the system tape [G3iV1.1-286] or memory card [G3sV2, G3iV2-386, G3vsV2] does not have a valid announcement file on it).
5. Whenever the Announcement circuit pack is replaced, announcements must always be rerecorded or downloaded to the new circuit pack. Otherwise, call processing is not able to use the pack.

6. If announcement speech memory is corrupted, announcements should not be saved [that is, if the Announcement Checksum Test (#209) fails, or if the speech sounds corrupted on playback]. This can ruin a good announcement file on the system tape [G3iV1.1-286] or memory card [G3sV2, G3iV2-386, G3vsV2] and potentially cause errors/alarms on any circuit pack to which the new file is downloaded. However, if the customer does not have a valid announcement file on the system tape [G3iV1.1-286] or memory card [G3sV2, G3iV2-386, G3vsV2], announcements can be saved in an effort to try to retain some of them (all of the announcements recorded may not be corrupted).
7. Due to a hardware fault in the TN750 announcement board, the following sequence of events my cause the announcement file to become corrupted and unusable:
   - Fill the board with recorded announcements.
   - Delete the last few announcements recorded.
   - Re-record the announcements deleted.

   If the announcement file becomes corrupted, the only solution is to re-record all announcements. To do this, follow these steps:

   a. Remove the announcement board.
   b. Remove the tape cartridge from the tape drive. Do this so that announcements are not automatically restored from tape.
   c. Re-insert the announcement board.
   d. Re-record all announcements.
   e. Insert the tape cartridge in the tape drive.
   f. Issue the save announcements command to save all the announcements on the tape.

   This hardware fault is fixed in the TN750B announcement board. However, the TN750B board will not automatically correct an announcement file which has previously been corrupted by a TN750 board. The only way to correct an announcement file corrupted by the TN750 board is to follow the steps above.

Announcement Administration

A brief description of the integrated announcement administration is given here to aid in troubleshooting the Announcement circuit pack and its ports. In many cases, it is necessary to record, play back, and/or delete announcements to resolve an alarm. It may also be necessary to save and restore announcements as part of the maintenance procedures. For a complete description of integrated announcement administration, see the *Administrator's Guide for Avaya MultiVantage Software.*

Announcement Session

Announcements can be recorded, played back, and deleted from an announcement session. A station's COS needs to include console permissions in order for that station to be able to enter an announcement session. To enter an announcement session, go off-hook on a station that has console permissions and enter the appropriate Feature Access Code (FAC), administered as Announcement access code on the FACs form. Dial tone should be returned at this point. Enter the extension of the announcement that needs to be recorded, deleted, or played back. Again, dial tone should be heard. To record an announcement, press station keypad digit 1, record after the tone, and hang up when done. To play back an announcement, press 2. To delete an announcement, press 3 (confirmation tone is given if the delete worked). Announcements can also be played back by simply calling the announcement extension associated with them.

Uploading/Downloading Announcements

Integrated announcements on the TN750 Announcement circuit pack can be uploaded to the system tape [G3iV1.1-286] or memory card [G3sV2, G3iV2-386, G3vsV2] with the administration terminal **save announcements** command. Likewise, integrated announcements can be downloaded to the Announcement circuit pack with the **restore announcements** command. Both of these commands require a free data module of NETCON type to be administered, a data module of announcement type (on the Announcement circuit pack) to be administered, and a tape cartridge to be in the system's tape drive (must not be write-protected) or a memory card (must not be write-protected). These commands are useful in maintaining the customer's recorded announcements. Depending on system traffic, announcement uploads and/or downloads take between 30 and 45 minutes.

The system **automatically** tries to download the Announcement circuit pack five minutes after it is inserted. This automatic download procedure is aborted if:

1. An announcement is recorded within 10 minutes of circuit pack insertion.
2. An announcement download is invoked sooner with the administration terminal **restore announcements** command.
3. No announcement and/or NETCON data module is administered.
4. Either the announcement data module is busy or all the administered NETCON data modules are busy.
5. No tape [G3iV1.1-286] or memory card [G3sV2, G3iV2-386, G3vsV2] is in the system.
6. The tape or memory card in the system does not have a valid announcement file saved on it.

NOTE:
Unlike translations, there is no provision in the Generic 3 system for automatically saving announcements to the system tape or memory card.

Hardware Error Log Entries and Test to Clear Values

Table 10-44. Announcement Circuit Pack Error Log Entries

Error Type	Aux Data	Associated Test	Alarm Level (See WARNING below)	On/ Off Board	Test to Clear Value
0[1]	0	Any	Any	Any	test board PCSS sh r 1
1(a)	0	Circuit pack removed or SAKI Test (#53)	MINOR	ON	
2(p)		None			
14(b)	1 to 64	Announcement Checksum Test (#209)			
18	0	busyout board PCSS	WARNING	OFF	release board PCSS
23(c)	0	None	WARNING	OFF	
125(d)		None	MINOR	ON	
170(e)	0	None	MINOR	ON	
217(f)	0	None	WARNING	OFF	
257	65535	Control Channel Test (#52)	MINOR	ON	test board PCSS l r 20
257(g)	Any	None			
267(f)	0	None	WARNING	OFF	
513(h)	Any	None			
1025(i)	4363	NPE Audit Test (#50)			test board PCSS l
1281(j)	17699	None			
1538(k)	Any	None	MINOR	ON	
1793		Angel-SP Handshake Test (#208)	MINOR	ON	test board PCSS l r 3
	17680	In-line Error			
2049(l) (m)		Clock Match Inquiry Test (#212)	MINOR	ON	test board PCSS sh r 3
	17674	In-line Error			
2305		140AY Loop Around Test (#210)	MINOR	ON	test board PCSS sh r 3

Continued on next page

Table 10-44. Announcement Circuit Pack Error Log Entries — *Continued*

Error Type	Aux Data	Associated Test	Alarm Level (See WARNING below)	On/ Off Board	Test to Clear Value
2561		Super Frame Match Inquiry Test (#211)	MINOR	ON	test board PCSS sh r 3
	17676	In-line Error			
2817(l)		Announcement Checksum Test (#209)	MINOR	ON	test board PCSS sh r 3
	17682	In-line Error			
	17699 (m)	In-line Error			
3840(n)	Any	None			
3999(o)	Any	None			

1 Run the Short Test Sequence first. If all tests pass, run the Long Test Sequence. Refer to the appropriate test description and follow the recommended procedures.

WARNING:
Announcement board alarms are upgraded to MAJOR when the BASE Tone Generator is set to 12. (France).

Notes:

a. Error Type 1— The circuit pack totally stopped functioning or it was physically removed from the system.

NOTE:
The alarm is logged about 11 minutes after the circuit pack has been removed and/or SAKI Test (#53) fails.

If the circuit pack is not in the system, insert a circuit pack (in the same slot as the error indicates) to resolve this error. Or, if the circuit pack is in the system and the red LED is on, follow the instructions for “Red (alarm)” in the “Control and Port Circuit Pack Status Led” section in Chapter 7, “LED Interpretation”.

NOTE:
The alarm is logged about 11 minutes after the circuit pack has been removed and/or SAKI Test (#53) fails.

WARNING:
Reseating and/or replacing the circuit pack results in loss of integrated announcements. See “General Notes” near the beginning of this Maintenance procedure.

b. Error Type 14— Whenever the Announcement Checksum Test (#209) fails, this error is logged. The Aux Data indicates the number of the first defective announcement found. This number corresponds to the announcement numbers on the announcement form. The extension relating to the announcement can be determined by the **display announcement** command. This error only appears in the Error Log in conjunction with Error Type 2817. Follow the procedures for Error Type 2817 to troubleshoot Error Type 14.

c. Error Type 23—The circuit pack has been logically administered but not physically installed. The alarm is cleared when the circuit pack is installed.

d. Error Type 125—A wrong circuit pack is inserted in the slot where this circuit pack is logically administered. To resolve this problem, either remove the wrong circuit pack and insert the logically administered circuit pack OR use the **change circuit-pack** command to readminister this slot to match the circuit pack inserted.

e. Error Type 170—Announcement board is not allowed in slot A03 for a system with Enhanced SCC cabinet. The red led of announcement board is turned on and the error message “Announcement board is not allowed in slot A03” is shown on SAT when **test/busyout/release board A03** commands are entered. The announcement board must be removed and inserted into a different slot.

f. Error Type 217 and 267— Indicate that there is more than one TN750 Announcement circuit pack inserted in the system. Remove the alarmed circuit pack.

g. Error Type 257—This error indicates transient communication problems with this circuit pack. This error is not service-affecting and no action is required.

h. Error Type 513—This error, when reported with Aux Data in the range of 4352 to 4358, indicates the circuit pack has reported a hardware failure on the circuit pack. The circuit pack should be replaced.

WARNING:
Replacing the circuit pack results in loss of integrated announcements. See “General Notes” near the beginning of this Maintenance procedure.

i. Error Type 1025—This error is not service-affecting and no action is required.

j. Error Type 1281—The SP found a fault in the speech main memory (SMM) (that is, it found one or more faulty memory locations). Whenever this error is logged, error 2817 is also logged [see Note (k)], which causes the maintenance system to run the Announcement Checksum Test (#209) to determine if the bad memory location was being used by an announcement.

k. Error Type 1538—The hyperactive circuit pack is out-of-service and may exhibit one or more of the following symptoms:

   1. The tests run on the ports of this circuit pack are returning with a NO-BOARD.
   2. A busyout/release of the circuit pack has no effect on test results.
   3. A **list configuration** command shows that the circuit pack and ports are properly installed.

   The system tries to restore the circuit pack within 15 minutes. If the error recurs after 15 minutes, replace the circuit pack. (Refer to Chapter 5, “Routine Maintenance Procedures”.)

l. Error Type 2049 and 2817—These errors are logged in conjunction with Error Type 1281, Aux Data 17699. Since that error [see Note (j)] means that a defective speech memory location was found, the announcement checksum error is also logged. This causes the Announcement Checksum Test (#209) to run, which determines if the defective memory location has corrupted any recorded announcements. If the Checksum Test passes, the faulty memory location is currently not being used, and the SP marks the location as faulty to ensure that future announcements do not attempt to use it.

   NOTE:
   As memory locations are marked faulty, the amount of available memory decreases, which decreases the total amount of announcement time available on the circuit pack.

m. Error Type 2049—A transient error that does not cause an alarm can occasionally occur during a SPE, TDM BUS, or Tone Clock interchange. It is possible for a marginal Tone-Clock circuit pack to cause this error against the ANN-BD without alarming the TONE-BD. If this error occurs again, replacing the Tone-Clock circuit pack may clear up this error. See the FAIL case in the Clock Match Inquiry Test (#212).

n. Error Type 3840— This error is not service-affecting and no action is required.

o. Error type 3999— Indicates that the circuit pack sent a large number of control channel messages to the switch within a short period of time. If error type 1538 is also present, then the circuit pack was taken out-of-service due to hyperactivity. If error type 1538 is not present, then the circuit pack has not been taken out-of-service, but it has generated 50% of the messages necessary to be considered hyperactive. This may be completely normal during heavy traffic periods. However, if this error type is logged when the circuit pack is being lightly used, it may indicate a problem with the circuit pack or the equipment attached to it.

p. Error Type 2—Check the Class of Restriction (COR) administered for the Data Line extension assigned to the TN750 for uploading and downloading announcements. The extension can be found by using **list data-module**.

System Technician-Demanded Tests: Descriptions and Error Codes

Investigate tests in the order presented in Table 10-45 on page 10-140 when inspecting errors in the system. By clearing error codes associated with the *Control Channel Loop Around Test*, for example, you may also clear errors generated from other tests in the testing sequence.

Table 10-45. System Technician-Demanded Tests: ANN-BD

Order of Investigation	Short Test Sequence	Long Test Sequence	Reset Board Sequence	D/ ND[1]
Control Channel Loop Around Test (#52) (a)		X		ND
Angel-Speech Processor (SP) Handshake Test (#208)		X		ND
Clock Match Inquiry (#212)	X	X		ND
Super Frame Match Inquiry (#211)	X	X		ND
140AY Loop Around Test (#210)	X	X		ND
Announcement Checksum Test (#209)	X	X		ND
Network Processor Element (NPE) Audit Test (#50) (a)		X		ND
SAKI Test (#53) (a)			X	D

1 D = Destructive, ND = Non-destructive

Note:

a. For a complete description of these tests, refer to the “XXX-BD (Common Port Circuit Pack)” Maintenance documentation.

Angel-Speech Processor (SP) Handshake Test (#208)

This test checks the integrity of the communication link between the two processors on the Announcement circuit pack. Failure of this test indicates that the Speech Processor is insane and **results in the loss of all integrated announcements on the circuit pack.**

Table 10-46. TEST #208 Angel-Speech Processor (SP) Handshake Test

Error Code	Test Result	Description/Recommendation
2000	ABORT	Response to the test request was not received within the allowable time period. If Error Type 1538 is present in the Error Log, follow the maintenance strategy recommended for this Error Type.
2100	ABORT	Could not allocate the necessary system resources to run this test.
	ABORT	Internal System Error. 1. Retry the command at 1-minute intervals a maximum of 5 times.
	FAIL	Test failed. Circuit pack cannot be used. **Announcement speech memory is cleared when this test fails. Therefore, when the problem has been resolved, announcements must be rerecorded or downloaded to the circuit pack.** Refer to “General Notes” near the beginning of this Maintenance documentation. 1. Reset the circuit pack via the **reset board PCSS** command and then run this test again. If the test continues to fail, replace the circuit pack and then run this test again. 2. If there are recurring alarms on this circuit pack caused by this test failing, replace the circuit pack **even if Step 1 works**. **WARNING:** *Replacing the circuit pack results in loss of integrated announcements. See “General Notes” near the beginning of this Maintenance documentation.*
	PASS	The communications link between the two processors on the Announcement circuit pack is functioning properly. User-reported troubles on this circuit pack should be investigated using other circuit pack and port tests. Refer to “ANN-PT (Announcement Port)” Maintenance documentation for a description of the port tests.

Announcement Checksum Test (#209)

Associated with every recorded announcement is a checksum. In this test, the SP checks a stored global checksum covering all recorded announcements against a calculated one and returns the results to the maintenance system. If the global checksum failed, maintenance requests the SP to check each individual announcement's checksum.

If the test fails, then it returns the total number of defective announcements found. In addition, associated with each failure is an error in the Error Log (Error Type 14). The Aux Data indicates the number of the first defective announcement found. This number corresponds to the announcement numbers on the announcement form. The extension relating to the announcement can be determined by the **display announcement** command.

Table 10-47. TEST #209 Announcement Checksum Test

Error Code	Test Result	Description/Recommendation
0	ABORT	An error code of 0 indicates that the announcement file has been corrupted due to a hardware fault in the TN750 board. Follow step #7 under "General Notes" at the beginning of this section.
1023	ABORT	There are no announcements currently recorded on the circuit pack.

Continued on next page

Table 10-47. TEST #209 Announcement Checksum Test — *Continued*

Error Code	Test Result	Description/Recommendation
1024	ABORT	This abort code is given for the following reasons: 1. An announcement upload or download is in progress. 2. An announcement upload or download is requested when this test is running. 3. A record is in progress. 4. A record request comes in when this test is running. If an announcement upload or download is in progress, a **status data-module <announcement data extension>** command should show that the announcement data port is connected to a NETCON data channel, and [for G3iV1.1-286] the tape drive should be active or [for G3sV2, G3iV2-386, or G3vsV2] the “card-in-use” amber LED for the memory card is on (to determine the extension of the announcement data module, use the **list data-module** command). See Note (a) at end of table for more information. 1. Wait until the blocking event is finished, and then run this test again. An upload or download could take up to 45 minutes to complete, and a recording session is finished as soon as the station that was making the recording is placed on-hook. 2. If the test continues to abort, and a record or upload/download is not in progress, escalate the problem.
2000	ABORT	Response to the test request was not received within the allowable time period. If Error Type 1538 is present in the Error Log, follow the maintenance strategy recommended for this Error Type.
2100	ABORT	Could not allocate the necessary system resources to run this test.
	ABORT	Internal System Error. 1. Retry the command at 1-minute intervals a maximum of 5 times.

Continued on next page

Table 10-47. TEST #209 Announcement Checksum Test — *Continued*

Error Code	Test Result	Description/Recommendation
0-256	FAIL	Test failed. The error code indicates the total number of defective announcements that were found. When TEST #209 fails with error code 0, the Global Checksum failed on the board, but no individual Checksum failed. **NOTE:** Since the announcements are recorded digitally, it is possible for the Announcement Checksum Test to *fail* but still have all the announcements sound uncorrupted. When an individual announcement fails the Checksum Test, always listen to the announcement first before taking any action (an announcement can be played back by dialing the announcement extension associated with the announcement number). If the announcement sounds corrupted, then rerecord it or delete it. 1. Look in the Error Log to determine the number of the first defective announcement. Play back the announcement. If the announcement sounds defective, rerecord it or delete it. If the error code was greater than one (indicating that there is more than one defective announcement), run this test again and repeat this step. 2. If after deleting and rerecording all defective announcements, the checksum test still fails, reset the circuit pack using the **reset board PCSS** command and run this test again. 3. If the test still continues to fail, reseat the circuit pack and restore all announcements with an appropriate time estimate (for example, 40 minutes.) Then rerecord the lost announcements (that is, those recorded since the last save operation) and run this test again. 4. If the test still continues to fail, replace the circuit pack, and run this test again. **WARNING:** *Replacing the circuit pack results in loss of integrated announcements. See "General Notes" near the beginning of this Maintenance procedure.*

Continued on next page

Table 10-47. TEST #209 Announcement Checksum Test — *Continued*

Error Code	Test Result	Description/Recommendation
	PASS	All recorded announcements checksum correctly, indicating that the speech main memory is functioning properly. User-reported troubles on this circuit pack should be investigated using other circuit pack and port tests. Refer to “ANN-PT (Announcement Port)” Maintenance documentation for a description of the port tests.

Notes:

a. The Announcement circuit pack can exhibit a condition that does not allow recording.

   If the circuit pack gets locked into this state (this is an extremely rare condition), two of the Announcement Ports on the circuit pack will be unusable by software, one of which is the record port. Also, **save/restore announcements** will not work, since the record port looks busy to the circuit pack. Note that software does not have any way of knowing this, and attempts to use the ports.

   If the circuit pack is locked into this state, the following symptoms are observed:

   1. When attempting to record an announcement, users hear the proper record tone, but the announcement do not record (they do not know it until the announcement is played back).
   2. Performing a **test board long** when the circuit pack is in this state yield the following abort codes:
      - Ports 1 AND 9 abort Test #206 with code 1024
      - Ports 1 AND 9 abort Test #205 with code 2000
      - Board level Tests #209 and #210 abort with code 1024
   3. The **save/restore announcements** command times out with:

      `Error encountered, can’t complete request`

   The Announcement circuit pack lock-up can be cleared remotely by performing a soft reset to the circuit pack:

   - **busyout board PCSS** (this command drops all calls in progress on the Announcement circuit pack)
   - reset circuit pack using the **reset board PCSS** command
   - release circuit pack using the **release board PCSS** command

140AY Loop Around Test (#210)

This test checks the integrity of the record channel on the Announcement circuit pack (Announcement Port 1). The main function of the 140AY device is to accept Pulse Code Modulation (PCM)/Adaptive Differential Pulse Code Modulation (ADPCM) samples and compress/expand the samples using ADPCM. This test connects a Tone Generator to one port (Announcement Port 1, the recording port), and a Tone Detector to another port (Announcement Port 9). A tone is generated by the Tone Generator on the first port and looped through the 140AY device to the second port. The Tone Detector then responds with a tone present/absent message. The 140AY Loop Around Test is repeated at three different speech compression rates.

Since this test involves sending a tone through two different ports, the Playback Speech Memory Array (PSMA) Test (#206) [see ANN-PT (Announcement Port) Maintenance documentation for a description of this test] is run on the two ports first to make sure that they are working properly.

Table 10-48. TEST #210 140AY Loop Around Test

Error Code	Test Result	Description/Recommendation
1-3	ABORT	Response to the test request was not received within the allowable time period. The error code indicates at which speech compression rate the test aborted (one being the first rate tested, three being the last). 1. Retry the command at 1-minute intervals a maximum of 5 times.
10	ABORT	The PSMA Test (#206) failed on Announcement Port 1.
90	ABORT	The PSMA Test (#206) failed on Announcement Port 9. 1. Refer to ”ANN-PT (Announcement Port)” Maintenance documentation, Test #206.
1000	ABORT	System resources required to run this test are not available. This test needs Announcement Ports 1 and 9 to run. One of the ports may be in use on a valid call. 1. Retry the command at 1-minute intervals a maximum of 5 times. 2. If the test continues to abort and Ports 1 and 9 are not in use, escalate the problem.

Continued on next page

Table 10-48. TEST #210 140AY Loop Around Test — *Continued*

Error Code	Test Result	Description/Recommendation
1002	ABORT	The system could not allocate time slots for the test. The system may be under heavy traffic conditions or it may have time slots out-of-service due to TDM-BUS errors. Refer to “TDM-BUS (TDM Bus)” Maintenance documentation to diagnose any active TDM-BUS errors. 1. If system has no TDM-BUS errors and is not handling heavy traffic, repeat test at 1-minute intervals a maximum of 5 times.
1003	ABORT	The system could not allocate a tone receiver for the test. The system may be oversized for the number of Tone Detectors present or some Tone Detectors may be out-of-service. 1. Look for TTR-LEV errors in the Error Log. If present, refer to the “TTR-LEV (TTR Level)” Maintenance documentation. 2. Look for TONE-PT errors in the Error Log. If present, refer to the “TONE-PT (Tone Generator)” Maintenance documentation. 3. If neither condition exists, retry the test at 1-minute intervals a maximum of 5 times.
1007	ABORT	The Announcement circuit pack thinks that Port 1 or Port 9 is busy. 1. Retry the command at 1-minute intervals a maximum of 5 times. 2. If the test continues to abort, follow the Announcement Port maintenance procedures for Ports 1 and 9. 3. If the Announcement Ports pass all their tests, escalate the problem.

Continued on next page

Table 10-48. TEST #210 140AY Loop Around Test — *Continued*

Error Code	Test Result	Description/Recommendation
1024	ABORT	Announcement circuit pack blocked the test because an announcement download is in progress. If an announcement download is in progress, a **status data-module <announcement data extension>** command should show that the announcement data port is connected to a NETCON data channel, and [for G3iV1.1-286] the tape drive should be active or [for G3sV2, G3iV2-386, or G3vsV2] the “card-in-use” amber LED for the memory card should be on (to determine the extension of the announcement data module, use the **list data-module** command). See Note (a) at end of table for more information. 1. Wait until download is finished (can take up to 45 minutes), and then run the test again. 2. If the test continues to abort and there is no download in progress, escalate the problem.
2000	ABORT	Response to the test request was not received within the allowable time period. If Error Type 1538 is present in the Error Log, follow the maintenance strategy recommended for this error type. 1. Retry the command at one minute intervals a maximum of 5 times.
2007	ABORT	The Announcement circuit pack thinks that Port 1 or Port 9 is busy. 1. Retry the command at 1-minute intervals a maximum of 5 times. 2. If the test continues to abort, follow the Announcement Port maintenance procedures for Ports 1 and 9. 3. If the Announcement ports pass all their tests, escalate the problem.
2100	ABORT	Could not allocate the necessary system resources to run this test. 1. Retry the command at 1-minute intervals a maximum of 5 times.

Continued on next page

Table 10-48. TEST #210 140AY Loop Around Test — *Continued*

Error Code	Test Result	Description/Recommendation
	ABORT	Internal System Error. 1. Retry the command at 1-minute intervals a maximum of 5 times.
1-3	FAIL	Test failed. The error code indicates at which speech compression rate the test actually failed (one being the first rate tested, three being the last). 1. Reset the circuit pack via the **reset board PCSS** command and then run this test again. If the test still fails, replace the circuit pack (see Warning) and run this test again. 2. If there are recurring alarms on this circuit pack caused by this test failing, replace the circuit pack even if Step 1 works (see Warning). **WARNING:** *Replacing the circuit pack results in loss of integrated announcements. See "General Notes" near the beginning of this Maintenance procedure.*
	PASS	The record channel on the Announcement circuit pack is functioning properly. User-reported troubles on this circuit pack should be investigated using other circuit pack and port tests. Refer to "ANN-PT (Announcement Port)" Maintenance documentation for a description of the port tests.

Notes:

a. The Announcement circuit pack can exhibit a condition that does not allow recording.

   If the circuit pack gets locked into this state (this is an extremely rare condition), two of the Announcement Ports on the circuit pack will be unusable by software, one of which is the record port. Also, **save/restore announcements** will not work since the record port looks busy to the circuit pack. Note that software does not have any way of knowing this, and attempts to use the ports.

   If the circuit pack is locked into this state, the following symptoms are observed:

   1. When attempting to record an announcement, users hear the proper record tone, but the announcement does not record (they do not know it until the announcement is played back).

2. Performing a **test board long** when the circuit pack is in this state yields the following abort codes:
   - Ports 1 AND 9 abort Test #206 with code 1024
   - Ports 1 AND 9 abort Test #205 with code 2000
   - Board level Tests #209 and #210 abort with code 1024
3. The **save/restore announcements** command times out with:

   `Error encountered, can't complete request`

The Announcement circuit pack lock-up can be cleared remotely by performing a soft reset to the circuit pack:

- **busyout board PCSS** (this command drops all calls in progress on the Announcement circuit pack)
- reset circuit pack using the **reset board PCSS** command
- release circuit pack using the **release board PCSS** command

Super Frame Match Inquiry Test (#211)

The super frame is a means by which the SP synchronizes with the 140AY device on the Announcement circuit pack. If the super frame is not synchronized, the SP is not able to properly process record/playback requests. Both the SP and the hardware generate a super frame pulse. When these two pulses are out of synch, the SP sets a flag to indicate the mismatch. When this test is run, the state of this flag is returned.

Table 10-49. TEST #211 Super Frame Match Inquiry

Error Code	Test Result	Description/Recommendation
2000	ABORT	Response to the test request was not received within the allowable time period. If Error Type 1538 is present in the Error Log, follow the maintenance strategy recommended for this Error Type.
2100	ABORT	Could not allocate the necessary system resources to run this test.
	ABORT	Internal System Error. 1. Retry the command at 1-minute intervals a maximum of 5 times.

Continued on next page

Table 10-49. TEST #211 Super Frame Match Inquiry — *Continued*

Error Code	Test Result	Description/Recommendation
	FAIL	Test failed. Announcement playbacks should sound corrupted. 1. Reset the circuit pack via the **reset board PCSS** command and then run this test again. If the test continues to fail, replace the circuit pack (see Warning). 2. If there are recurring alarms on this circuit pack caused by this test failing, replace the circuit pack even if Step 1 works (see Warning). **WARNING:** *Replacing the circuit pack results in loss of integrated announcements. See "General Notes" near the beginning of this Maintenance procedure.*
	PASS	The SP can properly process record/playback requests. User-reported troubles on this circuit pack should be investigated using other circuit pack and port tests. Refer to "ANN-PT (Announcement Port)" Maintenance documentation for a description of the port tests.

Clock Match Inquiry Test (#212)

This test is supported to determine the state of the clock generation circuitry on the Announcement circuit pack. This circuitry is used for controlling various pieces of the hardware, like the 140AY device. It is also used to synchronize the Announcement circuit pack with the clock that is on the backplane.

Table 10-50. TEST #212 Clock Match Inquiry Test

Error Code	Test Result	Description/Recommendation
2000	ABORT	Response to the test request was not received within the allowable time period. If Error Type 1538 is present in the Error Log, follow the maintenance strategy recommended for this Error Type.
2100	ABORT	Could not allocate the necessary system resources to run this test.
	ABORT	Internal System Error. 1. Retry the command at 1-minute intervals a maximum of 5 times.
	FAIL	Test failed. Announcements recorded or played back while the clock circuitry is not functioning properly sound distorted. The ANN-BD may be defective or the Active Tone-Clock circuit pack (TONE-BD) in the same Port Network as the ANN-BD may be marginal and is causing this test to fail. 1. Reset the circuit pack via the **reset board PCSS** command and then run this test again. If the test continues to fail, proceed to Step 2 or 3 as applicable. 2. If this is a High or Critical Reliability system, determine the Active TONE-BD in this Port Network via the **status system** command and make the Standby Tone-Clock circuit pack active via the **set tone-clock PCSS** command. Rerun the test. If the test passes, then replace the now Standby Tone-Clock circuit pack. If the test continues to fail, replace the ANN-BD circuit pack. **WARNING:** *Replacing the circuit pack results in loss of integrated announcements. See "General Notes" near the beginning of this Maintenance procedure.*

Continued on next page

Table 10-50. TEST #212 Clock Match Inquiry Test — *Continued*

Error Code	Test Result	Description/Recommendation
		3. If this is a Standard system (that is, not a High or Critical Reliability system), replace the ANN-BD. Rerun the test. If the test continues to fail, replace the Tone-Clock circuit pack located in the same Port Network as the ANN-BD. **WARNING:** *Replacing the Tone-Clock circuit pack causes a standard system PPN to perform a COLD 2 reset or an EPN to reset. See the "How to Replace a Tone-Clock Circuit Pack" section in the "TONE-BD (Tone-Clock Circuit Pack)" Maintenance documentation. Replacing the ANN-BD results in loss of integrated announcements. See "General Notes" near the beginning of this Maintenance procedure.* 4. If there are recurring alarms on this circuit pack caused by this test failing, replace the ANN-BD even if the previous steps were successful. **WARNING:** *Replacing the TONE-BD causes a standard system PPN to perform a COLD 2 reset or an EPN to reset. Replacing the ANN-BD results in loss of integrated announcements. See the "General Notes" section near the beginning of this Maintenance procedure.*
	PASS	Announcement record/playbacks should have clear sound quality. User-reported troubles on this circuit pack should be investigated using other circuit packs and port tests. Refer to "ANN-PT (Announcement Port)" Maintenance documentation for a description of the port tests.

ANN-PT (Announcement Port)

MO Name (in Alarm Log)	Alarm Level	Initial Command to Run[1]	Full Name of MO
ANN-PT	MINOR	test port PCSSpp l	Announcement Port
ANN-PT	WRN	test port PCSSpp l	Announcement Port

1 Where P is the port network number (1 for PPN and 2 or 3 for EPN); C is the carrier designation (for example, A, B, C, D, or E); and SS is the address of the slot in the carrier where the circuit pack is located (for example, 01, 02, etc.).

The TN750 Announcement circuit pack is a service circuit pack that provides a customer with an integrated means for recording announcements that can be played back on demand by call processing as part of a calling feature (that is, announcements on hunt group calls). There are 16 Announcement Ports on the Announcement circuit pack. Each port can play any integrated announcement, independently of the other ports. In addition to the 16 Announcement Ports, the Announcement circuit pack also has one Data Line Circuit Port (Port 17). The Data Line Circuit Port is used for uploading/downloading the announcement memory to/from the system tape. If there are any errors associated with Port 17, refer to “DAT-LINE (Data Line)” Maintenance documentation. If there are any errors associated with the circuit pack, refer to “ANN-BD (Announcement Circuit Pack)” Maintenance documentation.

The Announcement circuit pack has two processors on it. The first processor, or Angel, controls the circuit pack, and communicates with the switch via the control channel on the TDM Bus. The second processor, or SP, controls the speech memory and announcements. Digital speech is converted from its TDM Bus form to an internal storage form (for recording) and vice versa (for playbacks) by the 140AY device on the circuit pack, which has 16 channels (one for each Announcement Port).

General Notes

Here are a few **very important** general notes that apply to any problem on the Announcement circuit pack. The user should read this before attempting to work on the TN750 Announcement circuit pack or Announcement Ports, **especially if the circuit pack needs to be replaced.**

1. The Announcement circuit pack retains all integrated announcements *as long as the circuit pack has power*. For this reason, whenever there is a problem with either the Announcement circuit pack or an Announcement Port that may require the circuit pack to be reset, it is always better to try to reset the circuit pack via the **reset board PCSS** command first and, if that does not work, then try to reseat it. **Announcements are preserved through a software reset, but they are lost when the circuit pack is reseated.**

2. **If a customer has announcements on the Announcement circuit pack that cannot be re-recorded easily, then announcements must be saved on the system tape to ensure that they are not lost.** This should be done as soon as the announcements are recorded on the circuit pack (or whenever they are changed), assuming that the pack is in proper working order (see Note).

   This should be done as soon as the announcements are recorded on the circuit pack (or whenever they are changed), assuming that the pack is in proper working order (see Note).

   NOTE:
   Unlike translations, announcements are NEVER automatically saved to the system tape.

3. The administration terminal **save announcements** command replaces the announcement file on tape with the Announcement circuit pack speech memory. Care must be taken not to mistakenly enter this command, thereby destroying a valid file on tape.
4. The terminal **restore announcements** command replaces the Announcement circuit pack speech memory with the announcement file on the system tape. Care must be taken not to mistakenly enter this command, thereby destroying valid speech memory (especially if the system tape does not have a valid announcement file on it).
5. Whenever the Announcement circuit pack is replaced, announcements must always be re-recorded or downloaded to the new circuit pack. Otherwise, call processing is not able to use the circuit pack.
6. If announcement speech memory is corrupted, **announcements should not be saved**, that is, if the Announcement Checksum Test (#209) fails or if the speech sounds corrupted on playback. This can ruin a good announcement file on tape and potentially cause errors/alarms on any circuit pack to which the new file is downloaded. However, if the customer does not have a valid announcement file on tape, then announcements can be saved in an effort to try to retain some of them (all of the announcements recorded may not be corrupted).
7. Although Announcement Port 5 and Data Line Circuit Port 17 on the Announcement circuit pack are logically two separate ports, they are physically the same port. Therefore, if one of the ports is in use, the other one will be busy. Also, if Announcement Port 5 is out-of-service, the Data Line Circuit Port is taken out-of-service. However, if the Data Line Circuit Port is out-of-service, the Announcement Port remains in-service.

Announcement Administration

A brief description of the integrated announcement administration is given here to aid in the troubleshooting of the Announcement circuit pack and its ports. In many cases, it is necessary to record, play back, and/or delete announcements to resolve an alarm. It may also be necessary to save and restore announcements as part of the maintenance procedures. For a complete description of integrated announcement administration, see *Administrator's Guide for Avaya MultiVantage Software.*

Announcement Session

Announcements can be recorded, played back, and deleted from an announcement session. A station's COS needs to include console permissions in order for that station to be able to enter an announcement session. To enter an announcement session, go off-hook on a station that has console permissions and enter the appropriate FAC (administered as Announcement access code on the FACs form). Dial tone should be returned at this point. Enter the extension of the announcement that needs to be recorded, deleted or played back. Again, dial tone should be heard. To record an announcement, press station keypad digit 1, record after the tone, and hang up when done. To play back an announcement, press station keypad digit 2. To delete an announcement, press station keypad digit 3 (confirmation tone is given if the delete worked). Announcements can also be played back by simply calling the announcement extension associated with them.

Uploading/Downloading Announcements

Integrated announcements on the TN750 Announcement circuit pack can be uploaded to the system tape with the administration terminal **save announcements** commands. Similarly, integrated announcements can be downloaded to the Announcement circuit pack with the administration terminal **restore announcements** command. Both of these commands require a free data module of NETCON type to be administered, a data module of announcement type (on the Announcement circuit pack) to be administered, and a tape cartridge to be in the system's tape drive (must not be write-protected). These commands are useful in maintaining the customer's recorded announcements. Depending on system traffic, announcement uploads/downloads take between 30 and 45 minutes.

The system **automatically** tries to download the Announcement circuit pack five minutes after it is inserted. This automatic download procedure is aborted if:

1. An announcement is recorded within 10 minutes of circuit pack insertion.
2. An announcement download is invoked sooner with the administration terminal **restore announcements** command.
3. There is no announcement and/or NETCON data module administered.

4. Either the announcement data module is busy or all the administered NETCON data modules are busy.
5. There is no tape in the system.
6. The tape in the system does not have a valid announcement file saved on it.

NOTE:
Unlike translations, there is no provision in the system for automatically saving announcements to the system tape.

Hardware Error Log Entries and Test to Clear Values

Table 10-51. Announcement Port Error Log Entries

Error Type	Aux Data	Associated Test	Alarm Level	On/Off Board	Test to Clear Value
0[1]	0	Any	Any	Any	test port PCSSpp sh r 1
1		Playback Speech Memory Array (PSMA) Test (#206)	MINOR	ON	test port PCSSpp sh r 3
18	0	The port was busied out	WARNING	OFF	release port PCSSpp
130 (a)		None	WARNING	ON	test port PCSSpp sh
257		Channel Administration Memory Array (CAMA) Test (#205)	MINOR	ON	test port PCSSpp l r 3
	17667	In-line error			
513		140AY Channel Sanity Inquiry Test (#222)	MINOR	ON	test port PCSSpp sh r 3
	17684	In-line error			
769 (b)		None			

1 Run the Short Test Sequence first. If all tests pass, run the Long Test Sequence. Refer to the appropriate test description and follow the recommended procedures.

Notes:

a. This error type indicates that the circuit pack has been removed or has been insane for more than 11 minutes. To clear the error, reinsert or replace the circuit pack.

b. This error is logged and the port is alarmed when an alarm is raised on the Announcement circuit pack because of a faulty condition with a common circuit pack resource. Any one of the following alarmed errors on the Announcement circuit pack causes this error to be logged against the Announcement Port: 1793, 2049, 2305, 2561. Follow the ANN-BD (Announcement Circuit Pack) Maintenance documentation to resolve these alarms. When the corresponding circuit pack alarm is cleared, this alarm clears.

System Technician-Demanded Tests: Descriptions and Error Codes

Always investigate tests in the order presented in the table below when inspecting errors in the system. By clearing error codes associated with the *Channel Administration Memory Array (CAMA) Test,* for example, you may also clear errors generated from other tests in the testing sequence.

Order of Investigation	Short Test Sequence	Long Test Sequence	D/ND[1]
Channel Administration Memory Array (CAMA) Test (#205)		X	ND
Playback Speech Memory Array (PSMA) Test (#206)	X	X	ND
140AY Channel Sanity Inquiry Test (#222)	X	X	ND

1 D = Destructive; ND = Nondestructive

Channel Administration Memory Array (CAMA) Test (#205)

This test is a memory device that stores information used to control the 140AY device. The Angel asynchronously feeds the CAMA with the control information. During the CAMA test, the Angel writes patterns into the CAMA, reads them back, and verifies that they match. If the patterns do not match, the test fails. This test is run periodically by the switch maintenance and by the Announcement circuit pack in the background.

Table 10-52. TEST #205 Channel Administration Memory Array (CAMA) Test

Error Code	Test Result	Description/Recommendation
1000	ABORT	System resources required to run this test are not available. The port may be in use on a valid call. 1. Retry the command at 1-minute intervals a maximum of 5 times. 2. If the test continues to abort, and the circuit pack is not in use, escalate the problem.
2000	ABORT	Response to the test request was not received within the allowable time period. See Note (a) at end of table for more information.
2100	ABORT	Could not allocate the necessary system resources to run this test.
	ABORT	Internal System Error. 1. Retry the command at 1-minute intervals a maximum of 5 times.
	FAIL	Test failed. Announcements played back on this port may sound corrupted. 1. Reset the circuit pack via the **reset board PCSS** command and then run this test again. If the test continues to fail, replace the circuit pack (see Warning). 2. If there are recurring alarms on this port caused by this test failing, replace the circuit pack even if Step 1 works (see Warning). **WARNING:** *Replacing the circuit pack results in loss of integrated announcements. Refer to "General Notes" near the beginning of this Maintenance procedure.*
	PASS	This test verifies that the Angel processor can properly set up this port for playbacks. User-reported troubles on this circuit pack should be investigated using other port and circuit pack tests. (Refer to "ANN-BD (Announcement Circuit Pack)" Maintenance documentation for a description of the circuit pack tests.)

Notes:

a. The Announcement circuit pack can exhibit a condition that does not allow recording.

If the circuit pack gets locked into this state (this is an extremely rare condition), two of the Announcement Ports on the circuit pack (one of which is the record port) will be unusable by software. Also, **save/restore announcements** will not work since the record port looks busy to the circuit pack. Note that software does not have any way of knowing this and attempts to use the ports.

If the circuit pack is locked into this state, the following symptoms are observed:

1. When attempting to record an announcement, users hear the proper record tone, but the announcement does not record (they do not know it until the announcement is played back).
2. Performing a **test board long** when the circuit pack is in this state yields the following abort codes:
   - Ports 1 AND 9 abort Test #206 with code 1024
   - Ports 1 AND 9 abort Test #205 with code 2000
   - Board level Tests #209 and #210 abort with code 1024
3. The **save/restore announcements** command times out with:

   Error encountered, can't complete request

The Announcement circuit pack lock-up can be cleared remotely by performing a soft reset to the circuit pack:

- **busyout board PCSS** (this command drops all calls in progress on the Announcement circuit pack)
- reset circuit pack using the **reset board PCSS** command
- release circuit pack using the **release board PCSS** command

Playback Speech Memory Array (PSMA) Test (#206)

The PSMA test checks the integrity of a playback channel's interface to the speech memory and the TDM Bus. The SP has an internal buffer that contains a specific 256-byte sequence. During this test, the byte sequence is "played" through the 140AY device onto the TDM Bus. A General Purpose Tone Detector is used to confirm that the proper sequence was played. **This test is very important.** It is the only test that actually checks an Announcement Port's ability to play back an announcement on the TDM Bus. If the test fails, the Tone Detector returns the number of bytes that did not match the expected sequence. The larger the number, the more severe the problem with that port. If this test fails, announcements played over this port should sound corrupted.

It is the only test that actually checks an Announcement Port's ability to play back an announcement on the TDM Bus. If the test fails, the Tone Detector returns the number of bytes that did not match the expected sequence. The larger the

number, the more severe the problem with that port. If this test fails, announcements played over this port should sound corrupted.

Table 10-53. TEST #206 Playback Speech Memory Array (PSMA) Test

Error Code	Test Result	Description/Recommendation
1000	ABORT	System resources required to run this test are not available. The port may be in use on a valid call. 1. Retry the command at 1-minute intervals a maximum of 5 times. 2. If the test continues to abort and the pack is not in use, escalate the problem.
1002	ABORT	The system could not allocate time slots for the test. The system may be under heavy traffic conditions or it may have time slots out-of-service due to TDM-BUS errors. Refer to “TDM-BUS (TDM Bus)” Maintenance documentation to diagnose any active TDM-BUS errors. 1. If system has no TDM-BUS errors and is not handling heavy traffic, repeat the test at 1-minute intervals a maximum of 5 times.
1003	ABORT	The system could not allocate a tone receiver for the test. The system may be oversized for the number of Tone Detectors present or some Tone Detectors may be out-of-service. 1. Look for TTR-LEV errors in the Error Log. If present, refer to “TTR-LEV (TTR Level)” Maintenance documentation. 2. Look for TONE-PT errors in the Error Log. If present, refer to “TONE-PT (Tone Generator)” Maintenance documentation. 3. If neither condition exists, retry the test at 1-minute intervals a maximum of 5 times.
1024	ABORT	Announcement circuit pack blocked the test because an announcement download is in progress. If an announcement download is in progress, a **status data-module <announcement data extension>** command should show that the announcement data port is connected to a NETCON data channel, and the tape drive should be active. (To determine the extension of the announcement data module, use the **list data-module** command.) See Note (a) at end of table for more information. 1. Wait until download is finished (could take a maximum of 45 minutes), and then run the test again. 2. If the test continues to abort and there is no download in progress, escalate the problem.

Continued on next page

Table 10-53. TEST #206 Playback Speech Memory Array (PSMA) Test — *Continued*

Error Code	Test Result	Description/Recommendation
2000	ABORT	Response to the test request was not received within the allowable time period.
2100	ABORT	Could not allocate the necessary system resources to run this test.
	ABORT	Internal System Error. 1. Retry the command at 1-minute intervals a maximum of 5 times.
1 to 254	FAIL	Test failed. The error code indicates the number of byte count errors found by the Tone Detector. 1. Reset the circuit pack via the **reset board PCSS** command and then run this test again. If the test continues to fail, replace the circuit pack (see Warning). 2. If there are recurring alarms on this port caused by this test failing, replace the circuit pack even if Step 1 works (see Warning). **WARNING:** *Replacing the circuit pack results in loss of integrated announcements. Refer to "General Notes" near the beginning of this Maintenance procedure.*

Continued on next page

Table 10-53. TEST #206 Playback Speech Memory Array (PSMA) Test — *Continued*

Error Code	Test Result	Description/Recommendation
255	FAIL	Test failed. The Announcement Port and the Tone Detector never synchronized. Check for active GPTD-PT errors, and refer to “GPTD-PT [General Purpose Tone Detector Port (CPTR)]” Maintenance documentation to diagnose them first. 1. If there are no active GPTD-PT errors, reset the circuit pack via the **reset board PCSS** command and then run this test again. If the test continues to fail, replace the circuit pack (see Warning). 2. If there are recurring alarms on this port caused by this test failing, replace the circuit pack even if Step 1 works (see Warning). **WARNING:** *Replacing the circuit pack results in loss of integrated announcements. Refer to “General Notes” near the beginning of this Maintenance procedure.*
	PASS	This port can cleanly play announcements. User-reported troubles on this pack should be investigated using other port and circuit pack tests. Refer to “ANN-BD (Announcement Circuit Pack)” Maintenance documentation for a description of the circuit pack tests.

Notes:

a. The Announcement circuit pack can exhibit a condition that does not allow recording.

   If the circuit pack gets locked into this state (this is an extremely rare condition), two of the Announcement Ports on the circuit pack (one of which is the record port) will be unusable by software. Also, **save/restore announcements** will not work, since the record port looks busy to the circuit pack. Note that software does not have any way of knowing this and attempts to use the ports.

   If the circuit pack is locked into this state, the following symptoms are observed:

   1. When attempting to record an announcement, users hear the proper record tone, but the announcement does not record (they do not know it until the announcement is played back).

2. Performing a **test board long** when the circuit pack is in this state yields the following abort codes:
   - Ports 1 and 9 abort Test #206 with code 1024
   - Ports 1 and 9 abort Test #205 with code 2000
   - Board level Tests #209 and #210 abort with code 1024
3. The **save/restore announcements** command times out with:

   Error encountered, can't complete request

The Announcement circuit pack lock-up can be cleared remotely by performing a soft reset to the circuit pack:

- **busyout board PCSS** (this command drops all calls in progress on the Announcement circuit pack)
- reset circuit pack using the **reset board PCSS** command
- release circuit pack using the **release board PCSS** command

140AY Channel Sanity Inquiry Test (#222)

The Angel keeps a sanity status bit for each of the 16 channels on the 140AY device. This test queries the Angel to determine the status for a particular channel. If a channel is insane, that implies that announcements cannot be played back on that channel.

Table 10-54. TEST #222 140AY Channel Sanity Inquiry Test

Error Code	Test Result	Description/Recommendation
2000	ABORT	Response to the test request was not received within the allowable time period.
2100	ABORT	Could not allocate the necessary system resources to run this test.
	ABORT	Internal System Error. 1. Retry the command at 1-minute intervals a maximum of 5 times. 2. If the test continues to abort, escalate the problem.
	FAIL	Test failed. Announcements cannot be played back over this port. 1. Reset the circuit pack via the **reset board PCSS** command and then run this test again. If the test continues to fail, replace the circuit pack (see Warning). 2. If there are recurring alarms on this port caused by this test failing, replace the circuit pack even if Step 1 works (see Warning). **WARNING:** *Replacing the circuit pack results in loss of integrated announcements. Refer to "General Notes" near the beginning of this Maintenance procedure.*
	PASS	Announcements can be played back over this port. User-reported troubles on this pack should be investigated using other port and circuit pack tests. Refer to ''AN-LN-PT (Analog Line Port)'' for a description of the circuit pack tests.

ANNOUNCE (Announce)

MO Name (in Alarm Log)	Alarm Level	Initial Command to Run	Full Name of MO
ANNOUNCE	none	none	ANNOUNCEMENT

The ANNOUNCE MO logs an error in the hardware error log if at least one of the following is true:

- The **save announcements** or **restore announcements** command does not complete successfully, or the
- System fails to restore announcements from the memory card [386 system] or tape [286 system] at boot time.

Figure 10-4 shows the connection of the Announcement Circuit Pack to the system. To save or restore announcements, an ANNOUNCEMENT Data Extension must be administered, and at least one DATA-CHL (Network Control Data Channel) must be in the in-service/idle state.

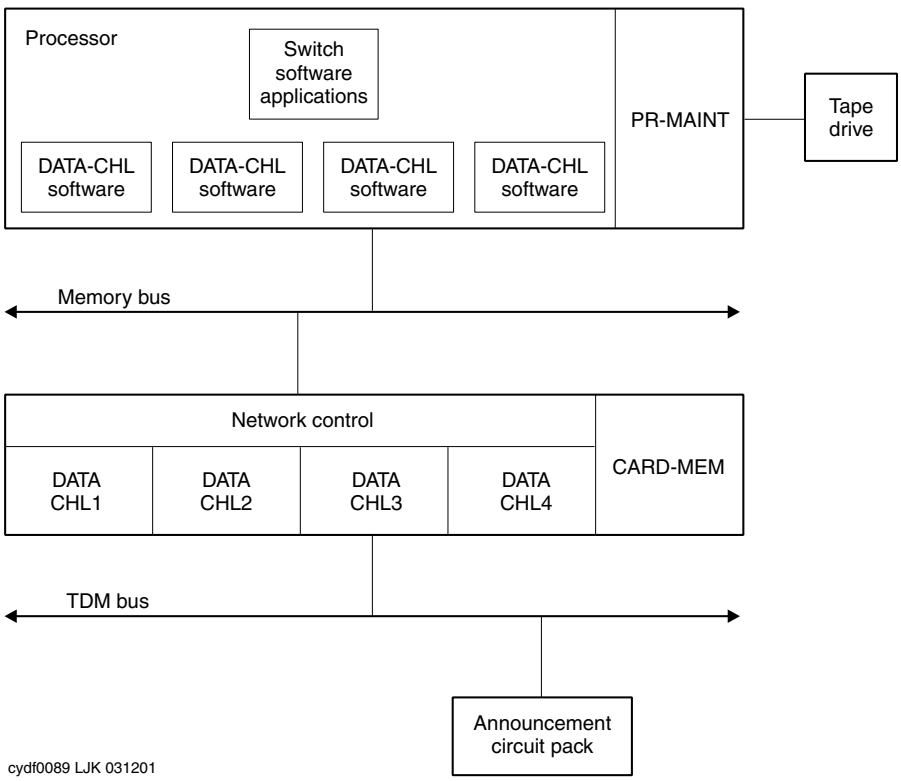

Figure 10-4. Connection of Announcement Circuit Pack to the System

Hardware Error Log Entries

ANNOUNCE Error Log Entries

Error Type	Aux Data	Associated Test	Alarm Level	On/Off Board	Test to Clear Value
1(a)(f)	any	None			
257(b)(f)	any	None			
513(c)(f)	0	None			
769(d)(f)	0	None			
1025(e)(f)	any	None			

Notes:

a. Error occurred while saving announcements. (See Table 10-42 in the next section for an explanation of Aux Data and for recommended repair actions.)

b. Error occurred while saving announcements to the standby SPE. (See Table 10-42 in the next section for an explanation of Aux Data and for recommended repair actions.)

c. User pressed cancel while announcements were being saved by the active PE.

d. User pressed cancel while announcements were being saved by the standby PE.

e. Error occurred while restoring announcements. (See Table 10-42 in the next section for an explanation of Aux Data and for recommended repair actions.)

f. The port field for this error contained the active PE complex when the error occurred.

Aux Data Error Codes and Recommended Repair Procedures

Table 10-55. Aux Data Error Codes and Recommended Repair Procedures

Aux Data	Description/Recommendation
9000 through 9031	CARD-MEM [386 systems] errors.
	Check and resolve CARD-MEM [386 systems] errors and alarms.
30001 through 30054	Tape [286 systems] errors.
	Check and resolve TAPE [286 systems] errors and alarms.
32001	Internal system error. 1. Check other ANNOUNCE errors and take corrective action. If there are no other ANNOUNCE errors, do the following: 2. Retry the command at two minute intervals a maximum of three times. 3. If the **save/restore announcements** command fails, escalate the problem.
32002	Announcement circuit pack is in use. 1. Retry the command at two minute intervals a maximum of three times. 2. If the **save/restore announcements** command fails, escalate the problem.
32003	Announcement port is in use. 1. Wait for all Announcement ports to become available. 2. Enter the **save/restore announcements** command.
32004	There are no announcements recorded on the Announcement Circuit Pack. The **save announcements** command is not allowed to prevent the destroying of the announcement file on tape [286 systems] or on the memory card [386 systems].
32005	Integrated announcement circuit pack is not present. The Announcement Circuit Pack is not inserted, or it is defective. 1. Enter the **list config** command to check for the presence of the circuit pack in the system. 2. If the Announcement Circuit Pack is present, use the **test board PCSS** command to check the status of the Announcement Circuit Pack.

Continued on next page

Table 10-55. Aux Data Error Codes and Recommended Repair Procedures — *Continued*

Aux Data	Description/Recommendation
32006	Announcement Data Module not available. 1. Use the **status** command to check the status of the Announcement Data Module.
32007	Announcement Data Module out of service. 1. Use the **status** command to check the status of the Announcement Data Module.
32008	Announcement data is being saved or loaded. 1. Retry the command at two minute intervals a maximum of three times. 2. If the **save/restore announcements** command fails, escalate the problem.
32009	Required DATA-CHL is not administered or out of service. (A DATA-CHL is required to save or restore announcements.) 1. Add a DATA-CHL if none is administered. 2. If a DATA-CHL is administered, use the **status** command to check the status of all DATA-CHLs. At least one DATA-CHL should be in the in-service/idle state.
32010 32013	DATA-CHL is not administered, or it is unavailable. (A DATA-CHL is required to save or restore announcements.) 1. Add a DATA-CHL if none is administered. 2. If a DATA-CHL is administered, use the **status** command to check the status of all DATA-CHLs. At least one DATA-CHL should be in the in-service/idle state.
32012	Required Announcement Data Module is not administered. 1. Add an Announcement Data Module and repeat the command.
32014	Command timed out on the standby processor [286 systems]. This could present problems. 1. Check the error and alarm logs for errors and alarms that are logged against the STBY-SPE (Standby SPE) [286 systems].

Continued on next page

Table 10-55. Aux Data Error Codes and Recommended Repair Procedures — *Continued*

Aux Data	Description/Recommendation
32015	Time of day not set. 1. Set the time of day, and reenter the **save/restore announcements** command.
32016	Internal System errors. Check for any other ANNOUNCE errors and take corrective action.If there are no other announcements errors, do the following: 1. Retry the command at two minute intervals a maximum of three times. 2. If the **save/restore announcements** command fails, escalate the problem.

ASAI-BD (Multi-Application Platform Board)

MO Name (in Alarm Log)	Alarm Level	Initial Command to Run [1]	Full Name of MO
ASAI-BD	MIN	test board PCSS sh	ASAI-BD
ASAI-BD	WRN	test board PCSS sh	ASAI-BD

1 Where P is the port network number (1 for PPN and 2 or 3 for EPN); C is the carrier designation (for example, A, B, C, or D); and SS is the address of the slot in the carrier where the circuit pack is located (for example, 01, 02, ..., and so forth).

Maintenance testing of the common circuit pack is handled by on-board firmware and SPE-controlled tests. Maintenance software queries the firmware for error and alarm information, status, and test results. Firmware automatically reports error conditions that result in SPE-controlled testing.

For MAPD board insertion, the switch makes an additional board query if any of the following circuit packs are inserted:

Circuit Pack	Vintage
TN754	49
TN556	49, 80 or greater
TN800	any

For any of the above initial board uplinks, the switch queries the board for administration data, as well as reporting the switch software release and the system type.

For the native mode, the response to the board query downlink messages consists of several CCMS uplink messages that identify the true board code, vintage, suffix, emulation type, and number of reserved slots needed.

NOTE:
Refer to LAN-BD Maintenance documentation for circuit pack level errors. See also ASAI-PT/ASAI-EPT (BRI Line) maintenance documentation for related line information. See the following exceptions listed below:

- Hyperactivity: currently, the common circuit pack is considered “hyperactive” if the Service Dispatcher receives 200 uplink messages from the circuit pack in a 10-second period. Since MAPD has 32 ports, the hyperactivity limit increases to 500 uplink messages per 10 seconds. The switch issues an alarm when the limit reaches 400; when it reaches 500 up-link messages in 10 seconds, the board is taken out of service.

- LED use: the LED Control Message 038x requests the Angel to drive the red, yellow, and green LEDs on the face plate of a typical port board on or off. On the MAPD, only the red LED is controlled by this message. Yellow and green change requests received from the switch by the MAPD drive LCD behavior rather than LED behavior. The DEFINITY switch continues to send the same LED control messages to the MAPD that the DEFINITY switch currently sends to all other port boards. The MAPD handles proper interpretation of these messages. You should note that the PC on the MAPD and the switch itself control the LEDs and the LCD on the MAPD.
- Port Administration: in Administration Without Hardware (AWOH), the switch allows administration of up to 8 ports in any of the first 12 ports. If the port type later reported by the board does not match the existing type, the switch assumes it to be a MAPD board with a different configuration and rejects the board.

NOTE:
Refer to the LAN-BD documentation for circuit pack level errors. For related information, see ASAI-PT and ASAI-EPT maintenance documentation.

ASAI-EPT

MO Name (in Alarm Log)	Alarm Level	Initial Command to Run	Full Name of MO
ASAI-EPT	MAJOR[1]	test station extension	ASAI-Adjunct

1 The alarm level for ASAI adjuncts is administered using the **set options** command. The alarm level can be set independently for off-board and on-board alarms to WARNING, MINOR, or MAJOR for all ASAI adjuncts in the system.

The maintenance strategy for this endpoint MO is built on maintenance facilities offered in the Avaya ISDN-BRI protocol and in the ASAI adjuncts. Currently there are no facilities in the protocol that provide for maintenance of set data features.

The TN800 is a PC-based platform that allows interaction of multiple applications with DEFINITY at any time. DEFINITY Release 5 software (Native mode) supports emulation of three types of port MOs on this board. The type of ports to be emulated is defined by the applications running on the TN800.

NOTE:
If the TN800 is emulating BRI, the software/firmware supports a maximum of 12 ports, but only 8 of the 12 ports can be administered at any one time.

Error Log Entries and Test to Clear Values

Table 10-56. ASAI-EPT Error Log Entries

Error Type	Aux Data	Associated Test	Alarm Level ASAI-EPT	On/ Off Board	Test to Clear Value
0[1]	0	Any	Any	Any	test ASAI-ADJ
2 (a)	2-102	None			
257 (b)	Any	BRI Layer 3 Query	MAJ/WNG[2]	OFF	test station ext r 2 test data-module ext r 2
351 (c)	0	none	WARNING	OFF	busyout and release station
513 (d)	0	None			
769 (e)	0	None	MAJOR	OFF	
2561 (f)	0	None			
2562-2566 (g)	0	None			
2567 (h)	0	None			

Continued on next page

Table 10-56. ASAI-EPT Error Log Entries — *Continued*

Error Type	Aux Data	Associated Test	Alarm Level ASAI-EPT	On/ Off Board	Test to Clear Value
2568 (i)	0	None			
3329 (j)	Any	Signaling Link Status (626)	MAJ/WNG†	OFF	
3584-3839 (k)	0, 1	None			
3841 (l) 4095	0	None			

1 Run the Short Test Sequence first. If all tests pass, run the Long Test Sequence. Refer to the appropriate test description and follow the recommended procedures.

2 Major alarms on this MO may be downgraded to Warning alarms based on the value used in the **set options** command.

Notes:

a. Errors of this type indicate violations of the ISDN-BRI signaling protocol. Timers associated with certain Layer 3 messages have expired before a required response was received. In the following table, the aux data column indicates which timer has just expired. For more information, refer to the Avaya ISDN-BRI Specification.

Aux Data	Timer Type
2	First T303 (SETUP timer)
3	Second T303 (SETUP timer)
4	T305 (DISConnect timer)
5	First T308 (RELease timer)
6	Second T308 (RELease timer)
10	T316 (RESTart timer)
12	T309 (Layer 2 Failure timer)
16	TM100 (Management Information Message timer 1)
17	TM200 (Management Information Message timer 2)
102	TASAI (ASAI Routing Timer)

The switch sent a message to an endpoint that did not respond in the allotted time. This may be due to failure of the point-to-point signaling link or because of a problem in the ASAI adjunct. To repair:

- Execute the **test station extension** command and perform the associated repair procedures for those tests.

b. An endpoint is not responding to the service state query message sent to the adjunct or to the endpoint. This error causes an alarm to be raised. The alarm is retired when the switch receives a response to the service state query to the endpoint or to the adjunct.

When this error occurs for an ASAI adjunct, the Aux Data field indicates the state of the ASAI link and whether an invalid response or no response was received to the query from the switch, as shown in the following table:

Aux Data	ASAI Link State	Error
102	13-restarting	No response to RESTART message
104	13-restarting	Invalid response to RESTART message
152	13-restarted	No response to Layer 3 query
154	13-restarted	Invalid response to Layer 3 query
202	13-established	No response to Layer 3 query
204	13-established	Invalid response to Layer 3 query

See “status bri-port” in Chapter 8 for an explanation of the ASAI link states.

For ASAI or Avaya adjuncts, the switch queries the adjunct every two minutes. The Layer 3 Query Test is not executed for ASAI or Avaya adjuncts through a command issued from the management terminal. While alarmed for this error, the switch takes the associated port out-of-service for five seconds every 15 minutes. This action attempts to stimulate recovery actions to be taken by the adjunct.

When this error occurs for an ASAI or Avaya adjunct, the service technician should:

1. Execute the **test station extension** command and perform the associated repair procedures for those tests.
2. Check the health of the adjunct by following the recommended repair procedures of the manufacturer of the adjunct if the preceding step does not resolve the problem.

c. This error and associated warning alarm are logged against an ASAI endpoint when the adjunct has asked the switch to suspend maintenance on the ASAI endpoint. Busying out and releasing the ASAI station clears this alarm.

d. This error occurs when the endpoint sends more messages than the switch can handle. The switch suspends the reception of messages from the endpoint for a short period of time. There is no repair procedure for this error. If the condition persists, replace the endpoint.

e. This error occurs when the signaling link associated with the ASAI endpoint has too much link-establishment related traffic. This occurs if the signaling link is alternating between assigned and established states. If this problem persists, replace the endpoint.

f. This error occurs when the ASAI-EPT message is not transmitted because the PKT-CTRL (packet control circuit pack) transmit buffers are exhausted. Frequent or persistent occurrence of these events may indicate a hardware problem or traffic overload on the PKT-CTRL, the signaling link, or the ASAI adjunct. Resolve the problem by following the repair procedures for the PKT-CTRL. If these attempts fail, re-engineering the traffic on the PKT-CTRL, signaling link, or adjunct may be necessary.

g. The ASAI message is not transmitted because the transmit buffer for the ASAI link is full, causing the link to be flow-controlled. Frequent or persistent occurrence of these events may indicate a hardware problem or traffic overload on the PKT-CTRL, the signaling link, or the ASAI adjunct. Resolve the problem by following the repair procedures issued by the manufacturer of the adjunct. If these attempts fail, re-engineering of the traffic on the PKT-CTRL, signaling link, or adjunct may be necessary.

h. This version of ASAI is not supported. Check the software version that is running on the ASAI adjunct.

i. The adjunct identification is invalid. Check the vendor ID or software running on the ASAI adjunct.

j. This occurs when the point-to-point signaling link to the endpoint goes down, except when the link goes down because either a system technician has busied out the PKT-CTRL or the PKT-BUS, or they have failed. This error raises an alarm against the endpoint or adjunct. Execute the **test station extension short** command and note the results of the Signaling Link Status Test (#626). If this test fails, follow the repair procedure for Test #626. The alarm is retired when the signaling link is re-established to the endpoint or adjunct.

k. The switch software logs certain ASAI cause values. The cause value is determined from the following formulas:

   — If the error type is greater than 3712, then the ASAI cause value is equal to the error type minus 3712. The switch sent this value to the adjunct.

   — If the error type is less than 3712, then the ASAI cause value is equal to the error type minus 3584. The switch sent this value to the adjunct.

   Table 10-57 contains a description of the various ASAI cause values and recommended system technician actions associated with the cause value. The ISDN-BRI Specification (801-802-100) contains further information. In addition, the Aux Data field of the Error Log entry contains additional diagnostic information.

l. The switch software logs certain ASAI cause values. The cause value is determined from the following formula:

— If the error type is greater than 3968, then the ASAI cause value is equal to the error type minus 3968. The switch sent this value to the endpoint.

— If the error type is less than 3968, then the ASAI cause code is equal to the error type minus 3840. The switch sent this value to the endpoint.

Table 10-57. ASAI Cause Values

Code	Explanation	Recommendation
0	Unrecognized ASAI Protocol Operation.	Requested ASAI protocol is not implemented by switch or adjunct. Aux data field of error log entry contains protocol identifier for unrecognized operation. 1. Consult switch and adjunct documentation to determine which set of operations is supported by switch and the adjunct. Adjunct administration turning off operations not implemented by the switch may resolve the problem.
34	No circuit or channel available	A resource on the switch is unavailable for a call. For BRI endpoints, this cause value is not logged. For ASAI, this condition means that there are no available trunks for an outgoing call request. 1. Verify that the adjunct is administered to support the trunk capabilities of the switch. 2. Investigate trunk group status by issuing the **status trunk** command from the SAT or by requesting trunk group query(ies) from the adjunct. 3. Perform trunk diagnostic procedures outlined in this manual.
40	Resources not available.	No available internal resources to service switch or adjunct request. Exceeds system transaction capacity for adjunct or switch. 1. May require re-engineering of adjunct services.

Continued on next page

Table 10-57. ASAI Cause Values — *Continued*

Code	Explanation	Recommendation
50	Requested facility not subscribed	Requested facility is implemented, but not administered. Potential administration problem with endpoint or adjunct. For BRI endpoints: 1. Verify the switch administration of endpoint using either the **display station** or **display data-module** commands. 2. If Step 1 does not resolve the problem, refer to the endpoint's service manual and verify administration on the endpoint. For ASAI adjuncts: 1. Display the Customer Optional Features Form (administration screen) on the switch to determine which ASAI capabilities are turned on in the switch. 2. Verify that the adjunct is administered to support the identical capabilities as the switch. If there is a mismatch in the administered capabilities, then readminister the switch and/or the adjunct to establish a consistent set of desired capabilities on both the switch and the adjunct.
58	Bearer capability not presently available	Requested bearer capability is implemented, but not administered. No B-channel administered. See code 50 above.
63	Service or option not available	Requested ASAI capability or resource is not available on the switch or adjunct. More than one adjunct may be contending for the same switch resource. Potential administration mismatch between the resource domains administered on the switch and those administered on the adjunct. 1. Verify that no overlapping administration of switch resources (for example, requesting notifications on a single domain by multiple adjuncts attempting to control a single call) exists across all adjuncts connected to the switch. If overlaps exist, then re-administer the adjuncts to ensure that each adjunct is associated with a unique set of switch resources.
65	Bearer service not implemented	Requested service not implemented in switch or endpoint.
69	Requested facility not implemented	Requested service not supported in switch or endpoint. 1. Consult switch and endpoint documentation to determine service support.

Continued on next page

Table 10-57. ASAI Cause Values — *Continued*

Code	Explanation	Recommendation
79	Service or option not implemented	Requested service or option (or combination of selected options) is not supported (implemented) in switch or the adjunct. 1. Consult switch and adjunct documentation to determine ASAI service and options supported by both switch and adjunct. Re-administration of the switch-administered capabilities (see Customer Optional Feature Form) or those of the adjunct may be necessary to correct the problem.
81	Invalid CRV	An invalid CRV was sent by the adjunct. 1. This may indicate a CRV inconsistency between the switch and the adjunct. See the CallVisor protocol reference manual.
87	Internal switch audit	There is an inconsistency in switch data records. 1. There is no action needed, since the switch has corrected the data inconsistency.

System Technician-Demanded Tests: Descriptions and Error Codes

When inspecting errors in the system, always investigate errors associated with the circuit pack and port first. Clearing these error codes first may also clear errors generated against the endpoint. When all circuit pack and port errors have been cleared, but errors still exist against the endpoint, investigate errors in the table below. By clearing error codes associated with the Signaling Link Status Test, for example, you may also clear errors generated from other tests in the testing sequence.

Order of Investigation	Short Test Sequence	Long Test Sequence	D/ND[1]
Signaling Link Status Test (#626)	X	X	ND

1 D = Destructive; ND = Nondestructive

BRI Layer 3 Query Test (#629)

This test is not used by the ASAI-ADJ maintenance object. For information about this test, see BRI-SET in the maintenance documentation.

Signaling Link Status Test (#626)

This test determines the current status of the signaling link. This test passes if the link is “bound” to an endpoint and fails if the link is “not bound.”

The definition of the term “bound” for a link depends upon the type of endpoint and may depend on the successful completion of procedures at both Layers 2 and 3 of the protocol. The definition of “bound” for ASAI type of endpoint is:

- ASAI adjuncts and BRI endpoints not administered for MIM initialization (point-to-point):

  For endpoints of this type, the signaling link is “bound” when the link is connected at Layer 2 (L2 established).

Table 10-58. TEST #626 Signaling Link Status Test

Error Code	Test Result	Description/Recommendation
1139	ABORT	The Packet Bus in the port network is out-of-service. 1. Follow the repair procedures for the Packet Bus. 2. After completing Step 1, execute the **test port long PCSSpp** command and review the results of the BRI Port Local LAN Looparound Test to verify the repair.
1141	ABORT	The PKT-CTRL is out-of-service. 1. Refer to PKT-CTRL maintenance documentation.
1144	ABORT	The PPN Packet Bus is out-of-service. 1. Follow the repair procedures for the Packet Bus in the PPN. 2. Execute the **test port long PCSSpp** command and review the results of the BRI Port Local LAN Looparound Test to verify the repair.

Continued on next page

Table 10-58. TEST #626 Signaling Link Status Test — *Continued*

Error Code	Test Result	Description/Recommendation
2012	ABORT	Internal system error
2100	ABORT	Could not allocate the necessary system resources to run this test. 1. Retry the command at 1-minute intervals a maximum of 5 times.
1113	FAIL	The signaling link is not “bound” to the adjunct. For ASAI adjuncts this error indicates that the link is disconnected at Layer 2. Since the signaling link associated with the endpoint has been identified by administration, the link is only “unbound” from the endpoint when it is disconnected. 1. Execute the **status bri-port PCSSpp** command and refer to the associated procedures for this command contained in “BRI-PORT”.
	PASS	The signaling link is connected at Layer 2 and “bound” to the ASAI adjunct.

ASAI-PT

MO Name (in Alarm Log)	Alarm Level	Initial Command to Run[1]	Full Name of MO
ASAI-PT	MAJOR[2,3]	test port PCSSpp l	ASAI ISDN BRI Port
ASAI-PT	WARNING	test port PCSSpp l	ASAI ISDN BRI Port

1 Where P is the port network number (1 for PPN and 2 or 3 for EPN); C is the carrier designation (for example, A, B, C, or D); and SS is the address of the slot in the carrier where the circuit pack is located (for example, 01, 02, ..., and so forth).

2 The alarm level for ASAI adjunct ports may be administered using the **set options** command. The alarm level can be set independently for off-board and on-board alarms to WARNING, MINOR, or MAJOR for all ASAI adjunct ports in the system.

3 All alarming for an ASAI adjunct and off-board alarming for an ASAI port is disabled if the ASAI adjunct asks the switch to suspend maintenance. When this occurs, an error and a WARNING alarm is logged against the ASAI adjunct. Check the Hardware Error and Alarm Logs to see if the adjunct has disabled alarming.

Unless otherwise stated, all maintenance actions contained in this section apply to ASAI-PT and ISDN-BRI ports connected to ASAI adjuncts. This port type is administered as an ASAI-BD on the TN800 circuit pack.

The TN800 circuit pack is a PC-based platform that allows interaction of multiple applications with DEFINITY at any time. DEFINITY software (Native mode) will support emulation of three types of port MOs on this board. The type of ports to be emulated are defined by the applications running on the TN800. The TN800 can support a maximum of 32 ports (time slots) at a time.

The TN800 connects to the switch through a single slot in the backplane, however its width is not limited to one slot. The number of slots occupied by the TN800 is supplied by the board during its insertion. The TN800 is 3 slots wide. The blank (reserve) slots are to the left of the functional slot.

In non-native mode the TN800 is recognized as TN556, TN2181, TN754, or TN746 based on the switch software and the application running on the TN800. In non-native mode only one type of port MOs will run at any time, and the port type depends on the application running on the TN800. If the TN800 fails diagnostics in non-native mode, the system's alarm and error logs would show a failure for the board type the TN800 is emulating.

Error Log Entries and Test to Clear Values

Table 10-59. ASAI-PT Port Error Log Entries

Error Type	Aux Data	Associated Test	Alarm Level ASAI-PORT	On/Off Board	Test to Clear Value
0[1]	0	Any	Any	Any	test port PCSSpp sh r 1
1 (a)	(a)	Level 1 Status Inquiry (#621)	MAJ[2]	OFF	test port PCSSpp sh r 2
513 (b)	0	none	(b)	ON	
1537 (c)	46210	CRC Error Counter (#623)	MAJ[2]	OFF	
3841 (d)	46208	None			
3844 (e)	46223	None			
3845 (f)		None			
3846 (g)	TEI	None			

1 Run the Short Test Sequence first. If all tests pass, run the Long Test Sequence. Refer to the appropriate test description and follow the recommended procedures.

2 Major and Minor alarms may be downgraded to warning alarms based on the value used in the **set options** command.

Notes:

a. This error occurs when the Level 1 Status Inquiry fails or when the BRI circuit pack detects that Level 1 has been deactivated on the port. The aux data field contains one of the following values:

Blank	This indicates that the Level 1 Status Inquiry failed.
32773	This is a message from the ASAI-Line circuit pack indicating Level 1 has been deactivated.

Refer to the repair procedures for Test #621.

b. The circuit pack is having problems transmitting data to the Packet Bus, thus affecting the conveyance of signalling information over D-channel. This error occurs when the Packet Bus transmit FIFO buffer overflows. This condition probably indicates a hardware problem as well. The ASAI-PORT alarm level is MAJOR with aux data 0. Use troubleshooting procedures for both on-board hardware problems and potential off-board Packet Bus problems.

c. The port received an invalid frame over the D-channel. When the Cyclical Redundancy Check (CRC) errors exceed 5 within 15 minutes, the port is taken out of service for 5 seconds. If 5 more CRC errors are received within 15 minutes of the first set of 5 errors, the port is taken out of service for one minute. If 5 more CRC errors are received within 15 minutes of the last 5, the port is taken out of service for 15 minutes.

   This error is most likely due to a problem with the wiring to the set or adjunct, interference on the wiring due to a noise source, or no termination (an open circuit). It usually does not indicate a problem with the circuit pack.

   - Check the wiring to the endpoints or the adjunct.
   - If the problem persists, replace the endpoints or adjuncts.

d. This error occurs when a Layer 1 Transmission error is detected for the port. Run the Long Test Sequence and note the results of the Layer 1 Transmission Error Counter Test (#624).

e. This error occurs when the circuit pack detects an overflow of its receive buffers. Run the Long Test Sequence and note the results of the Receive FIFO Overflow Counter Test (#625).

f. This error occurs when the BRI Port Local LAN Looparound Test (#618) fails. Run the Long Test Sequence and note the results of Test (#618).

g. The Terminal Endpoint Identifier (TEI) administered for the ASAI endpoint most likely does not match the TEI administered in the ASAI adjunct. Check the switch administration of the TEI against that of the adjunct, and make sure that both are using the same TEI.

System Technician-Demanded Tests: Descriptions and Error Codes

Always investigate tests in the order presented in the following tables when inspecting errors in the system. For example, by clearing error codes associated with the NPE Crosstalk Test, you may also clear errors generated from other tests in the testing sequence.

Order of Investigation	Short Test Sequence	Long Test Sequence	D/ND[1]
ASAI Port Local LAN Looparound Test (#618)		X	D
Level 1 Status Inquiry Test (#621)	X	X	ND
CRC Error Counter Test (#623)		X	ND
Layer 1 Transmission Error Counter Test (#624)		X	ND
Receive FIFO Overflow Error Counter Test (#625)		X	ND
Clear Error Counters (#270)	X	X	ND

1 D = Destructive; ND = Nondestructive

BRI Port Local LAN Looparound Test (#618)

This test is destructive.

This test verifies the connectivity of a BRI port across the LAN Bus and executes only if the port is out-of-service. The test aborts if calls associated with the port are in-progress. Failures of this test indicate either on-board faults associated with the ASAI-PT hardware on the circuit pack or problems with the LAN Bus, which is used to form connectivity between the switch and the ASAI-PT.

The dotted lines in Figure 10-5 show how a Looparound Test is performed across the Packet Bus for the D-channel.

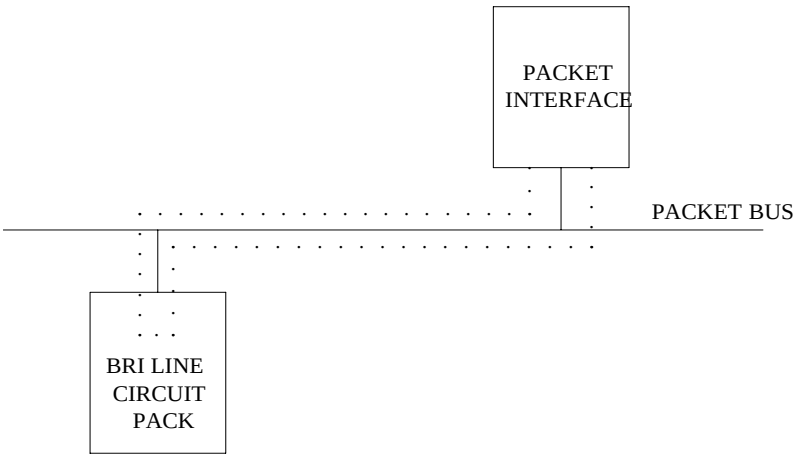

Figure 10-5. BRI Port Local LAN Looparound Path

Table 10-60. TEST #618 BRI Port Local LAN Looparound

Error Code	Test Result	Description/Recommendation
1015	ABORT	The port is not in the out-of-service state. 1. Display the Port Status form using the **status bri-port PCSSpp** command to determine which stations or adjuncts are on this port. 2. Use the extension shown on this form in the **status station** command to determine if the station or adjunct is in use. 3. If the port is in use, wait until it is idle, and use the **busyout port PCSSpp** command to place it in the out-of-service state and repeat this test. **WARNING:** *Since the "busyout" command is destructive, using this command prior to the port being idle causes all transactions associated with the ASAI on the port to be torn down. Note that third party calls established by an ASAI adjunct remain connected even though the port is taken out-of-service.*
1139	ABORT	The Packet Bus in the port network is out-of-service. 1. Follow the repair procedures for the Packet Bus. 2. After completing Step 1, execute the **test port long PCSSpp** command and review the results of the BRI Port Local LAN Looparound Test to verify the repair.
1141	ABORT	The PKT-CTRL is out-of-service. 1. Follow the repair procedures for the PKT-CTRL. 2. Issue the **test port long PCSSpp** command and review the results of the BRI Port Local LAN Looparound Test to verify the repair.
1144	ABORT	The PPN Packet Bus is out-of-service. 1. Follow the repair procedures for the Packet Bus. 2. Issue the **test port long PCSSpp** command and review the results of the BRI Port Local LAN Looparound Test to verify the repair.
2012	ABORT	Internal system error

Continued on next page

Table 10-60. TEST #618 BRI Port Local LAN Looparound — *Continued*

Error Code	Test Result	Description/Recommendation
2100	ABORT	Could not allocate the necessary system resources to run this test. 1. Retry the command at 1-minute intervals a maximum of 5 times.
	FAIL	The Looparound test has failed. 1. If the test fails repeatedly, attempt to reset the circuit pack if the other ports on the board are not in use. Reset the circuit pack by issuing the **busyout board PCSS** and the **reset board PCSS** commands. 2. If the test fails again, execute **test pkt P** on the management terminal. If this fails, follow the failure procedures the in PKT-BUS section. 3. If the tests executed in Step 2 pass, the problem is local to the BRI board. Replace the circuit pack.
	PASS	The BRI Port Local LAN Looparound test has passed.

Level 1 Status Inquiry Test (#621)

This test determines the state of the transmission facility of a BRI port at the Level 1 (L1) or physical layer. L1 can be in one of two possible states: Activated or Deactivated.

The Activated state is the correct state for an ISDN-BRI port. In this state the Level 1 interface can communicate with the BRI endpoint or ASAI adjunct administered on this port. This test passes if the state of L1 is activated. This test also passes if software has taken this port out of service.

The Deactivated state indicates a problem with the ASAI circuit pack. When in this state, the Level 1 interface is idle and is not trying to communicate with the BRI endpoints or adjunct. When an ASAI port is placed in the out-of-service state, Level 1 is also put into the deactivated state. This could be due either to the system detecting a fault with the port or in response to a **busyout port PCSSpp** request.

Table 10-61. TEST #621 Level 1 Status Inquiry

Error Code	Test Result	Description/Recommendation
1187	ABORT	The board, port, or station may have been busied-out by a technician. 1. Look in the Error Log for Error Type 18 (port busied out) for this port and ASAI-BD (board busied out). If this error type is present for ASAI-PT only, then release the port using the **release port pp** command and run the test again. If the error is present for both ASAI-BD and ASAI-PT, then release the board with the **release port PCSS** command and run the test again. **NOTE:** When you release a port, you release all ports associated with it. If certain ports still need to be busied out, use the **release port PCSSpp** command to busy them out. 2. Make sure the terminal is connected. 3. Retry the command at 1-minute intervals a maximum of 5 times.
2000	ABORT	Response was not received from the circuit pack within the allowable time period. 1. If the test aborts repeatedly a maximum of 5 times, reset the circuit pack using the **busyout board PCSS** and **reset board PCSS** commands. 2. If the test aborts again, replace the circuit pack.

Continued on next page

Table 10-61. TEST #621 Level 1 Status Inquiry — *Continued*

Error Code	Test Result	Description/Recommendation
2012	ABORT	Internal system error
2100	ABORT	Could not allocate the necessary system resources to run this test. 1. Retry the command at 1-minute intervals a maximum of 5 times.
3	FAIL	Received a status of Level 1 Deactivated; the port is out-of-service. 1. Issue the **status bri-port PCSSpp** command to verify that the service state of the port is out-of-service. If the port is not out-of-service, proceed to Step 2. 2. If the port has been placed out-of-service using the **busyout port PCSSpp** command, try releasing the port by executing the **release port PCSSpp** command. Then issue the **test port long PCSSpp** command, and review the results of Level 1 Status Inquiry test. If this test is still failing, proceed to Step 3. 3. After executing the **test port long PCSSpp** command, review the results of all the tests. Follow the repair procedures for any tests that fail. Verify repair of the problem by executing the **test port PCSSpp** command and by determining that the Level 1 Status test passes.
	PASS	This test indicates that Level 1 is activated, or that software has taken the port out of service.

Layer 1 Transmission Error Counter Test (#624)

This test reads and clears the BRI port's Layer 1 Transmission error counter maintained on the ASAI circuit pack. This counter is incremented by the circuit pack when it detects a Layer 1 transmission problem. The test passes if the value of the counter is 0 (that is, the error is cleared). If the counter is not zero, the test fails, and the value of the counter is displayed in the Error Code field.

This error is most likely due to a problem with the wiring or adjunct (verify that the wiring meets the configuration rules defined in *DEFINITY Communications System Generic 1 and Generic 3i Wiring*, 555-204-111). It does not indicate a problem with the TN800 circuit pack. This test is useful for verifying the repair of the problem

Table 10-62. TEST #624 Layer 1 Transmission Error Counter Test

Error Code	Test Result	Description/Recommendation
2000	ABORT	Response was not received from the circuit pack within the allowable time period. 1. If the test aborts repeatedly a maximum of 5 times, reset the circuit pack using the **busyout board PCSS** and **reset board PCSS** commands. 2. If the test aborts again, replace the circuit pack.
2012	ABORT	Internal system error
2100	ABORT	Could not allocate necessary system resources to run test. 1. Retry the command at 1-minute intervals a maximum of 5 times.
Any	FAIL	The TN800 circuit pack is still detecting errors of this type. The Error Code field contains the value of this counter. 1. Retry the command at 1-minute intervals a maximum of 5 times. 2. If the test continues to fail, review the results of other tests in the Long Test Sequence. Note the results of the Level 1 Status Inquiry test. Follow the repair procedures for any of the executed tests if they fail. Otherwise, go to the next step. 3. Replace the circuit pack.
	PASS	The Layer 1 Transmission error counter was read correctly and has a value of 0.

Receive FIFO Error Counter Test (#625)

This test reads and clears the BRI port's Receive FIFO error counter maintained on the TN800 circuit pack. This counter is incremented by the circuit pack when it detects an overflow of its receive buffers. The test passes if the value of the counter is 0 (that is, the error is cleared). If the counter is not zero, the test fails, and the value of the counter is displayed in the Error Code field.

This error can occur if signaling frames are being received from a Packet Bus at a rate sufficient to overflow the receive buffers on the circuit pack for a port or if hardware fault is causing the receive buffers not to be emptied properly. This test is useful for verifying the repair of the problem.

Table 10-63. TEST #625 Receive FIFO Error Counter Test

Error Code	Test Result	Description/Recommendation
2000	ABORT	Response was not received from the circuit pack within the allowable time period. 1. If the test aborts repeatedly a maximum of 5 times, reset the circuit pack via the **busyout board PCSS** and **reset board PCSS** commands. 2. If the test aborts again, replace the circuit pack.
2012	ABORT	Internal system error
2100	ABORT	Could not allocate necessary system resources to run test. 1. Retry the command at 1-minute intervals a maximum of 5 times.
Any	FAIL	The TN800 circuit pack is still detecting errors of this type. The Error Code field contains the value of this counter. 1. Retry the command at 1-minute intervals a maximum of 5 times. 2. If the test continues to fail, review the results of other tests in the Long Test Sequence. Note the results of the Level 1 Status Inquiry test. Follow repair procedures for any of the tests that fail. Otherwise, go to the next step. 3. If the tests for the endpoints or adjunct pass and the Layer 1 Transmission Error Counter Test continues to fail, check the wiring to the endpoints or adjunct.
	PASS	The Layer 1 Transmission error counter was read correctly and has a value of 0.

Clear Error Counters Test (#270)

There are various error counters associated with each ASAI-PT. This test clears those counters and triggers the auditing of Layer 3 reinitialization. This test is used only to send messages to the ASAI-PT and, therefore, should neither abort nor fail. ASAI uses a fixed TEI value of 1.

Table 10-64. TEST #270 Clear Error Counters

Error Code	Test Result	Description/Recommendation
Any	ABORT	This test should never abort.
Any	FAIL	This test should never fail. 1. Retry the command at 1-minute intervals a maximum of 5 times.
	PASS	The message to clear the error counters of the ASAI-PT has been sent.

ASAI-RES/E-DIG-RES (TN800 reserve slot)

MO Name (in Alarm Log)	Alarm Level	Initial Command to Run	Full Name of MO
ASAI-RES	NONE	NONE	TN800 ASAI reserve slot
E-DIG-RES	NONE	NONE	TN800 DIG reserve slot

There are no tests associated with these MOs. Both the **test board** and **busy out board** commands abort when either is attempted on a reserved slot. An error message indicates the slot is associated with the circuit pack that the TN800 is emulating, but the requested operation is not valid.

The TN800 MAPD (Multi-Application Platform for DEFINITY) circuit pack connects to the switch through a single slot in the backplane. The number of slots occupied by the MAPD pack is supplied by the board when inserted. The TN800 in R5EM is 3 slots wide. The TN800 requires 2 reserve slots to its left. The reserve (blank) slots are to left of the functional slot and are place holders on the switch, and do not have any interaction with the switch.

Each instance of these MOs represents a reserve slot associated with respective circuit pack mode in which the MAPD is working.

ATM-BCH (ATM B-Channel Trunk)

MO Name (in Alarm Log)	Alarm Level	Initial Command to Run[1]	Full Name of MO
ATM-BCH[2]	MAJOR[3]	test port UUCSSppp l	ATM B-Channel Trunk
ATM-BCH	MINOR	test port UUCSSppp l	ATM B-Channel Trunk
ATM-BCH	WARNING	test port UUCSSppp sh	ATM B-Channel Trunk

1 UU is the universal cabinet number (1 for PPN, 2-3 for EPNs). C is the carrier designation (A, B, C, D, or E). SS is the number of the slot where the circuit pack resides (01-21). ppp is the 3-digit port number (9-256).

2 For additional repair information, see also "ATM-DCH (ATM D-Channel Port)", "ATM-SGRP (ATM Signaling Group)" and "PKT-BUS (Packet Bus)".

3 A MAJOR alarm on a trunk means that alarms on these trunks are not downgraded by the **set options** command, and at least 75% of the trunks in this trunk group are alarmed.

This maintenance object explains how you test and repair TN230x ATM Interface circuit packs (TN2305 and TN2306) that have ATM B-channel trunks administered for ATM Circuit Emulation Service (CES).

ATM Circuit Emulation Service

Under ATM Circuit Emulation Service, you simulate ISDN-PRI circuits by assigning ATM ports to *signaling groups*. Each signaling group represents a PRI circuit, and the ports in the group represent the D-channel and B-channels of that circuit. B-channels must also be assigned to ISDN-PRI trunk groups. TN230x circuit packs support up to 248 ports per circuit pack.

Signaling group components

Bearer (B) channels (ATM-BCH) transmit digitized voice or data, while a separate D-channel (ATM-DCH) handles call-control signaling. One D-channel handles signaling for a group of B-channels that combine to form a signaling group (ATM-SGRP).

B-channel service states

The ISDN specification defines 2 service state categories for B-channels as listed in Table 10-65 on page 10-195.

Table 10-65. ATM ISDN service states

Category	Description		
Service states			
In-Service (INS)	B-channel is in normal operating state	Active	A call is connected over the B-channel.
		Idle	There is no call on the B-channel.
Out-of-Service/Far-end (OOS/FE)	The switch has not successfully negotiated B-channel connection as of yet. Calls cannot be placed or received. When you first administer a B-channel, the switch initializes the B-channel to this state while it tries to negotiate a connection to the far end. If the request times out with no response from the far end, the switch leaves the B-channel in the OOS/FE state.		
Out-of-Service/Near-End (OOS/NE)	The NPE Crosstalk Test has failed or the trunk is busied out. Calls cannot be placed or received.		
Maintenance/Far-End (MTC/FE)	A request has timed out with no response from the far end after signaling is in place and B-channels are in service. Calls can be received but not placed, and stable calls are unaffected.		
Maintenance/Near-End (MTC/NE)	The signaling channel (ISDN-LNK) has been busied out, possibly after a **test trunk *grp#/mbr#* long** command. Calls cannot be placed or received, but stable calls are unaffected.		
Pending states[1]			
Pending-in-Service	The near-end is waiting for a response to a transition-to-service request.		
Pending-Maintenance	The near-end is waiting for a transition-to-maintenance-service request (US and other country-protocol-1 systems).		

1 The switch is waiting for a reply from the far-end. Pending service states remain in effect until the near end receives a response or times out.

B-channel alarms

The Maintenance/Far-End and Out-Of-Service/Far-End states generate warning alarms displayed with **status trunk *grp#/mbr#***.

Table 10-66. ATM-BCH alarms by service state

Service state	Alarm[1]	Possible cause	Possible solution
Out-of-Service/NE	Warning	Trunk busied out	Release the port (**release trunk *grp#lmbr#***).
	Minor	NPE Crosstalk Test (#6) failed	Replace ATM circuit pack.
	None	ATM circuit pack lost signal or there is a circuit pack problem.	Install circuit pack or cable. Check circuit pack using procedures in ATM-BCH. Check far-end switch status.
Out-of-Service/FE	Warning	Unadministered far-end	Administer the corresponding trunk on the far-end switch.
	Warning	Far-end busied out	Check the status of the far-end switch.
Pending/In-Service Pending/Maint	None	Maintenance message timed out waiting for reply	Wait 2 minutes after the pending state clears, and check the service state.
Maint/NE	None	ISDN test call in progress (**test trunk long**)	Wait for the test to finish and recheck.
	None	System link busied out	Check link status. Run **release link *link#***.
Maint/FE	Warning	Signaling channel down for over 90 sec.	See ATM-SGRP or ATM-DCH.
	Warning	Repeated lack of response to messages sent to the far end	Wait. Maintenance software resends messages periodically. Or run **test trunk *grp#lmb#*** or **test signaling-grp *grp#***.
	Warning	The far-end trunk is being tested.	Check status of the far-end switch. Wait for testing to finish.
In-Service	None	Normal operating state	

1 ATM-BCH alarms; alarms against other maintenance objects may also be present.

Error Log Entries and Test to Clear Values

Table 10-67. ATM-BCH Error Log entries

Error Type	Aux Data	Associated Test	Alarm Level	On/Off Board	Test to Clear Value
0[1]	0	Any	Any	Any	test port UUCSSppp
1(a)	Any	None			test port UUCSSppp
18	0	busyout trunk *grp/mbr*			release trunk grp/mbr
129 (b)		None	WNG	OFF	test port UUCSSppp
130 (c)					test port UUCSSppp
257(d)	Any	Service State Audit (Test #256)			test port UUCSSppp
513(e)	Any	None	WNG	OFF	test port UUCSSppp
769(f)	Any	Service State Audit (Test #256)			test port UUCSSppp
1793(g)	Any	None			test port UUCSSppp
3073(h)	Any	Service State Audit (#256)			test port UUCSSppp
3585(i)	Any	None			none
3841(j)	Any	None	WNG	OFF	none

1 Run the Short Test Sequence first. If all tests pass, run the Long Test Sequence. Refer to the appropriate test description and follow the recommended procedures.

Notes:

a. Error Type 1: the two ends of the ATM trunk do not agree on the ISDN call state. Possible causes:

- Received a DISConnect or RELease COMplete message with cause value 52 (outgoing calls barred)
- Received a DISConnect or RELease COMplete message with cause value 54 (incoming calls barred)
- Outgoing call renegotiated by the far end to another B-channel in the absence of SETUP message glare
- Near end attempted a call on a B-channel that the far end has marked OOS

When running the Short Test Sequence, pay close attention to the results of the Call State Audit Test (#257).

b. Error Type 129: the far-end switch changed its ISDN service state to either out-of-service or maintenance. This may be a temporary condition because the far-end is testing that trunk or a hardware problem with the trunk. Outgoing calls may not be allowed over that trunk.

   1. Investigate the trunk status (**status trunk *grp#/mbr#***).

c. Error Type 130: the circuit pack has been removed or has been insane for more than 11 minutes.

   1. Reinsert or replace the circuit pack to clear the error.

d. Error Type 257: SETUP received for a B-channel that is in an invalid service state. Service states may be incompatible at the two ends of the trunk. A normal call was received while the B-channel was MTC/FE, MTC/NE, OOS/FE, or OOS/NE or a test call was received while the B-channel was OOS/FE or OOS/NE.

e. Error Type 513: RELease COMplete message received with cause value 82 (nonexistent channel). The B-channel may not be administered at the far end. The trunk has been placed in the OOS/FE state.

f. Error Type 769: inconsistent SERVice or SERVice ACKnowledge message. Possible causes:

   - SERVice or SERVice ACKnowledge message received containing a change status that is more available than the previously-transmitted SERVice message.
   - Unsolicited SERVice ACKnowledge message received containing a change status that does not match the current B-channel state.

   ISDN-PRI service-state negotiation rules have been violated and may indicate that a pending service-state audit is failing. The system

   - cancels the maintenance timer
   - increments the Service State Audit counter
   - attempts a Service State Audit

   When running the Short Test Sequence, pay close attention to the results of the Service State Audit Test (#256).

g. Error Type 1793: TN230x circuit pack has failed. The maintenance system

   - places the trunk in the OOS/NE state
   - sends a SERvice message to the far-end (if possible) containing a change status of OOS for the B-channel
   - returns the trunk to service when the ATM trunk circuit pack reports the failure cleared

h. Error Type 3073: Service State Audit attempt failed (see Test #256). Calls can be received but not placed until the test passes and the trunk state returns to In-Service.

   1. Check the trunk status (**status trunk *grp#/mbr#***).

i. Error Type 3585: ISDN RESTART message received. Active calls have been dropped.

The following Aux Data values (Error Type 3585 only) below represent the trunk's ISDN call state at the time Error 3585 occurred. This information can be useful if users report dropped calls on the ISDN-PRI trunks.

Aux Data	Description
0	An idle trunk received a restart.
10	An ISDN RESTART from the far-end has unexpectedly cleared a call in the ACTIVE state (call stable, parties talking).
4 7 8 260 263	An ISDN RESTART from the far-end has unexpectedly cleared a RINGING call.
1 3 6 9 265	An ISDN RESTART from the far-end has unexpectedly cleared a call before the call entered the RINGING state.
11 12 19 531 267 268	An ISDN RESTART from the far-end has unexpectedly cleared a call that was already in the process of clearing. If this condition occurs frequently, the far-end may be trying to clear trunks that appear to be in the "hung" state.

j. Error Type 3841: the far-end rejected an ATM CES trunk selected by the near-end 10 times. The ATM CES trunk may not be administered on the far-end.

1. Get the physical name of the ATM trunk by noting the decimal number in the `Aux Data` field.
2. Check administration for the named trunk on the far-end.
3. If problems persist, then busyout the ATM trunk to take it out of the hunt group.

The WARNING alarm retires automatically whenever a called endpoint answers an outgoing or incoming call that uses the alarmed trunk.

System Technician-Demanded Tests: Descriptions and Error Codes

Always investigate problems in the order presented in the table below. When you clear one of the error codes associated with a given test, you clear errors generated by other tests in the testing sequence. If you clear errors out of order, you can lose important information.

Table 10-68. System Technician-Demanded Tests: ATM-BCH

Order of Investigation	Short Test Sequence	Long Test Sequence	Destructive or Non-destructive
Signaling Link State Check Test (#255)	X	X	ND
Service State Audit Test (#256)	X	X	ND
Call State Audit Test (#257)	X	X	ND
ISDN Test Call Test (#258)		X	ND

Signaling Link State Audit Test (#255)

This non-destructive test checks the status of the TN230x ATM-CES Interface circuit pack and the ATM D-channel (ATM-DCH) trunk, which are both important elements to the health of the ATM-BCH trunk.

Table 10-69. TEST #255 Signaling Link State Audit Test

Error Code	Test Result	Description/Recommendation
None	ABORT	Internal system error
0	ABORT	
1114	ABORT	Signaling link in transitional state 1. Retry the command up to 5 times at 1-minute intervals.
1018	ABORT	Maintenance disabled 1. Enable maintenance. Enter **y** in the `Maintenance Tests?` field on page 2 of the **change trunk-group** form.
4	FAIL	Signaling channel problem 1. Look for errors or alarms against the "ATM-SGRP (ATM Signaling Group)" and "ATM-DCH (ATM D-Channel Port)" maintenance objects.
8	FAIL	TN230x circuit pack failed 1. See the "ATM-INTF (TN2305/6)" maintenance object.
	PASS	Signaling link OK.

Service State Audit (#256)

This test checks the service state of the trunk.

Country protocol 1. If the interface uses country protocol 1 (includes USA), the service-state audit executes in all trunk service states. It queries the service state on the far end and waits 2 minutes for a reply. If the first request times out, the service-state audit asks again. If the request times out again, it logs error 3073 and resends the request every 15 minutes. It places in-service trunks in the MAINTENANCE/FAR-END state (outgoing calls blocked, incoming calls accepted). Incoming calls trigger an immediate service-state audit without waiting for the end of a 15-minute cycle.

Any other country protocol. If the interface uses some other country protocol, the service-state audit executes only on trunks that are in the OUT-OF-SERVICE/FAR-END state. It asks the far-end switch to bring the trunk back into the IN-SERVICE state and waits 2 minutes for a reply. If the first request times out, the service-state audit asks again. If the request times out again, it leaves the trunk in the OUT-OF-SERVICE/FAR-END state and tries again in 1 hour.

NOTE:
PASS for this test only means that a message to the far-end was successfully sent.

To check the service state of the ATM-BCH trunk, run **status trunk *grp#/mbr#***.

Table 10-70. TEST #256 Service State Audit Test

Error Code	Test Result	Description/Recommendation
1000	ABORT	Needed resources not available, port on a call or initializing 1. Run **status trunk *grp#/mbr#***. 1. Check the results of Test #255.
1018	ABORT	Maintenance disabled 1. Enable maintenance by entering **y** in the `Maintenance Tests?` field on page 2 of the **change trunk-group** form.
1113	ABORT	Signaling link failed 1. Run **status trunk *grp#/mbr#***. 2. Check the results of Test #255. 3. See the "ATM-SGRP (ATM Signaling Group)" maintenance object.

Continued on next page

Table 10-70. TEST #256 Service State Audit Test — *Continued*

Error Code	Test Result	Description/Recommendation
1114	ABORT	Signaling link in transitional state 1. Retry the command up to 5 times at 1-minute intervals.
1116	ABORT	Trunk not in Out-of-Service/Far-end state and country protocol other than 1
1117	ABORT	Service-state audit message outstanding 1. Wait 2 minutes, then try again.
2100	ABORT	Could not allocate needed resources 1. Retry the command up to 5 times at 1-minute intervals.
1113	FAIL	Signaling link failed 1. See the "ATM-SGRP (ATM Signaling Group)" and ISDN-LNK (ISDN Signaling Link Port) maintenance objects.
	FAIL	Internal system error 1. Retry the command up to 5 times at 1-minute intervals.
	PASS	1. Wait 4 minutes, then check the Error Log for any new Error Type 3073. ■ If there are none, both sides of the ISDN connection agree on the service state. The negotiation succeeded. ■ If there is a new 3073 error, then the negotiation failed (the request timed out).

Call State Audit Test (#257)

This test audits the internal call state by asking the far-end switch for the ISDN call state. The test is particularly useful when you are trying to clear a hung call. If the internal call state on the near-end differs from that on the far-end, the call is torn down.

The ISDN specification allows up to 2 minutes for a reply. If a reply is not received within the 2 minute window, the test logs a protocol time-out violation against the associated signaling channel (ATM-DCH, Error Type 1).

NOTE:
PASS simply means that an appropriate message was composed and sent to the far-end switch.

Table 10-71. TEST #257 Call State Audit Test

Error Code	Test Result	Description/Recommendation
1018	ABORT	Maintenance disabled 1. Enable maintenance by entering **y** in the `Maintenance Tests?` field on page 2 of the **change trunk-group** form.
1019	ABORT	Audit already in progress 1. Wait 2 minutes, and try again.
1113	ABORT	Signaling link failed 1. Check the results of Test #255 (Signaling Link State Check).
1114	ABORT	Signaling link in transitional state 1. Retry the command up to 5 times at 1-minute intervals.
1116	ABORT	Trunk out-of-service 1. Check the trunk service state (**status trunk *grp#/mbr#***).
2100	ABORT	Could not allocate needed resources 1. Retry the command up to 5 times at 1-minute intervals.
	FAIL	Internal system error 1. Retry the command up to 5 times at 1-minute intervals.
	PASS	1. Wait 4 minutes, then check the Error Log for call-state mismatches. If a call state mismatch is found, the call is torn down.

ISDN Test Call Test (#258)

This non-destructive test performs a far-end looparound test over an ATM-BCH trunk if

- the trunk is IN-SERVICE, MAINTENANCE/NEAR-END, or OUT-OF-SERVICE/NEAR-END
- no calls are active on the trunk
- the system uses country protocol 1 (including US) or the far-end has looparound capability

The test sets up a call to a far-end switch over the ATM-BCH trunk. Then the digital port on a TN711D Maintenance/Test circuit pack sends a bit pattern to the far-end and back. If the received pattern matches that sent, the test passes. If there are differences, it fails.

Synchronous Test Calls

You can initiate a synchronous outgoing test call (including a test call for ISDN-PRI trunks) with these commands:

- **test trunk *grp#/mbr#* long [repeat #]**
- **test board *UUCSS* long [repeat #]**
- **test port *UUCSSpp* long [repeat #]**

Table 10-72. TEST #258 ISDN Test Call

Error Code	Test Result	Description/Recommendation
4	ABORT	Signaling channel problem 1. Look for errors or alarms against the "ATM-SGRP (ATM Signaling Group)" and "ATM-DCH (ATM D-Channel Port)" maintenance objects.
8	ABORT	TN230x circuit-pack problem 1. See the "ATM-INTF (TN2305/6)" maintenance object.
1004	ABORT	B-channel in use. 1. See if a call is active. Run **status trunk *grp#/mbr#*** command. 2. If the service state is In-Service/Idle, retry the test.
1005	ABORT	Bad configuration (for example, no Maintenance/Test circuit pack) 1. Make sure that the Maintenance/Test Circuit Pack is inserted. 2. Repeat the test.
1018	ABORT	Test call disabled 1. Enable Maintenance on the Trunk Group form.
1020	ABORT	TN230x circuit-pack problem 1. See the "ATM-INTF (TN2305/6)" maintenance object.
1024	ABORT	Maintenance/Test Digital Port in use 1. Wait until yellow and green LEDs on the Maintenance/Test circuit pack are OFF. 2. Rerun the test. 3. If the problem persists, see the M/T-DIG (Maintenance/Test Digital Port) maintenance object.

Continued on next page

Table 10-72. TEST #258 ISDN Test Call — *Continued*

Error Code	Test Result	Description/Recommendation
1113	ABORT	Signaling link failed 1. Check the results of Test #255 (Signaling Link State Check Test).
1116	ABORT	Switch could not change the service state 1. See if calls are active. Run **status trunk *grp#/mbr#***. 2. If a call is active. proceed as for Error Code 1119. 3. If not, check the Error and Alarm Logs and refer to the ATM-TRK (Circuit Emulation Service Circuit Pack) maintenance object.
1117	ABORT	ISDN service message outstanding 1. Wait 2 minutes. Then try again.
1118	ABORT	Far-end not administered 1. Check the administration of the far-end of the ATM trunk. Run **status trunk *grp#/mbr#***. 2. Try the test again.
1119	ABORT	Test call aborted, normal call attempted 1. Wait for the call to terminate normally or drop it by running **busyout trunk *grp#/mbr#***. 2. When the trunk is idle, retry the test.
1120	ABORT	Trunk OUT-OF-SERVICE/FAR-END 1. Try to change the service state via Test #256 (Service State Audit Test). 2. Try the test again.
1122	ABORT	No test-line number for the far-end switch 1. Check the Trunk Group Administration form.
1123	ABORT	No Feature Access Code administration for this Facility Test 1. Check the Dial Plan and Feature Administration forms.
2000 2012 None	ABORT	Internal system error 1. Retry the command up to 5 times at 1-minute intervals.
2035	ABORT	Call timed out 1. Wait 1 minute, and try again.

Continued on next page

Table 10-72. TEST #258 ISDN Test Call — *Continued*

Error Code	Test Result	Description/Recommendation
2036-2037	ABORT	Internal system error 1. Retry the command up to 5 times at 1-minute intervals.
2038-2039	ABORT	Problem reading test data 1. Wait 1 minute, and then try again. 2. If the test aborts again, there is a serious internal problem.
2040	ABORT	Internal system error 1. Retry the command up to 5 times at 1-minute intervals.
2041	ABORT	Call timed out 1. Wait 1 minute, and try again.
2066	ABORT	Could not establish test call 1. Retry the command up to 5 times at 1-minute intervals.
2067	ABORT	Call timed out 1. Wait 1 minute, and try again.
2074	ABORT	Bit and Block Error query failed 1. Retry the command up to 5 times at 1-minute intervals. 2. If the test continues to abort, there may be a serious internal problem in the Maintenance/Test Digital Port. See the M/T-DIG (Maintenance/Test Digital Port) maintenance object.
2075	ABORT	Internal system error 1. Retry the command up to 5 times at 1-minute intervals.
2100	ABORT	Could not allocate the necessary system resources to run this test. 1. Retry the command at 1-minute intervals a maximum of 5 times.
2201-2205	ABORT	Internal system error 1. Retry the command up to 5 times at 1-minute intervals.
2206	ABORT	Could not allocate needed resources 1. Retry the command at 1-minute intervals a maximum of 5 times.
2208	ABORT	Internal system error 1. Retry the command at 1-minute intervals a maximum of 5 times.

Continued on next page

Table 10-72. TEST #258 ISDN Test Call — *Continued*

Error Code	Test Result	Description/Recommendation
2209-2210	ABORT	Could not allocate needed resources 1. Follow recommendations for ABORT code 2100.
2211	ABORT	Internal system error. 1. Retry the command at 1-minute intervals a maximum of 5 times.
2212	ABORT	Call terminated by unexpected disconnect 1. Wait 1 minute and then try again.
2213	ABORT	Call timed out 1. Wait 1 minute, and try again.
2214	ABORT	Call terminated by unexpected disconnect 1. Wait 1 minute and then try again.
2215-2219	ABORT	Internal system error 1. Retry the command at 1-minute intervals a maximum of 5 times.
2220	ABORT	Call terminated prematurely 1. Wait 1 minute, and try again.
2221-2226	ABORT	Internal system error 1. Retry the command at 1-minute intervals a maximum of 5 times.
2227	ABORT	Could not allocate needed resources 1. Retry the command at 1-minute intervals a maximum of 5 times.
2042	FAIL	Test data corrupt
	PASS	Test pattern intact. If the synchronous test call was performed (long test sequence), the communications path is operating properly.

ATM-DCH (ATM D-Channel Port)

MO Name (in Alarm Log)	Alarm Level	Initial System Technician Command to Run[1]	Full Name of MO
ATM-DCH[2]	MINOR	test port *UUCSSpp* l	ATM D-Channel
ATM-DCH	WARNING	test port *UUCSSpp* sh	ATM D-Channel

1 pp is administered as a port in the range of 9 through 32.

2 For additional related information, see "ATM-TRK (Circuit Emulation Service Circuit Pack)".

NOTE:
TN230x circuit packs are not interchangeable. Always replace an ATM circuit pack with the same type.

This MO (ATM-DCH) uses the existing ISDN-PLK or D-channel maintenance strategy with modifications. The ATM circuit pack can be administered for up to 8 Circuit Emulation Service (CES) or signaling groups, each with its own D-channel, as opposed to one D-channel for an entire DS1 circuit pack.

NOTE:
Due to the dual personalities and the number of D-channels that the ATM board can possess, the in-line errors and signaling port LAN loopback test has been moved to the maintenance object ATM-TRK. When an in-line error is sent due to PACKET BUS errors, the ATM circuit pack maintenance object receives the error, not ATM-DCH.

The D-channel ISDN-PRI interface, which is emulated for ATM-CES, uses out-of-band signaling to transmit control messages between two endpoints. User information or bearer channels (B-channels) carry digitized voice and digital data and are assigned to DS1 ISDN trunks or PRI endpoints. Call control signaling for the B-channels is combined and carried over the separate ISDN-PRI Signaling Link Port D-channel.

Problems with ATM-DCH affects all of the associated B-channels, since call control signaling cannot reach the far-end switch or terminal adapter. Stable calls can remain operational, but no new calls can be made. ATM-DCH in turn depends on the TN230X ATM Trunk circuit pack it resides on and the packet bus which provides the link to the processor.

When working ATM-DCH alarms or errors, also investigate

- "ATM-TRK (Circuit Emulation Service Circuit Pack)"
- PKT-BUS (Packet Bus

Hardware Error Log Entries and Test to Clear Values

Table 10-73. ATM D-channel Error Log entries

Error Type	Aux Data	Associated Test	Alarm Level	On/Off Board	Test to Clear Value
0[1]	0	Any	Any	Any	test port UUCSSpp[2]
18 (a)	0	busyout port *UUCSSpp*	WARNING	OFF	release port UUCSSpp
130 (b)		None	WARNING	ON	test port UUCSSpp
1793 (c)		Signaling Link Board Check (#643)			test board UUCSS l

1 Run the Short Test Sequence first. If all tests pass, run the Long Test Sequence. Refer to the appropriate test description and follow the recommended procedures.

2 pp is for ports 9-32.

Notes:

a. Error Type 18: D-channel busied out; no calls possible over this D-channel.

b. Error Type 130: circuit pack removed or has been insane for more than 11 minutes. To clear the error, reinsert or replace the circuit pack.

c. Error Type 1793: ATM Trunk circuit pack failed the Signaling Link Board Check (#643). Resolve any ATM-TRK errors in the Error Log.

System Technician-Demanded Tests: Descriptions and Error Codes

The command to test the ATM-DCH maintenance object is **test port UUCSSpp**, where pp is for ports 9-32.

Table 10-74. System Technician-Demanded Tests: ATM-DCH

Order of Investigation	Short Test Sequence	Long Test Sequence	D/ND[1]
Signaling Link Board Check (#643)	X	X	ND

1 D = Destructive, ND = Nondestructive

Signaling Link Board Check (#643)

This nondestructive test checks the health of the ATM TN230X trunk circuit pack hardware. The test runs on a periodic or scheduled basis, during initialization testing, and upon demand.

NOTE:
The board-level maintenance is handled independently of the ATM-CES signaling link maintenance, raising the possibility of inconsistent states.

Table 10-75. TEST #643 Signaling Link Board Check

Error Code	Test Result	Description/Recommendation
	ABORT	Internal System Error Retry the command at 1-minute intervals for a maximum of 5 times.
8	FAIL	The TN230X circuit pack is not in-service. Check the Error Log for ATM-TRK errors and resolve any using "ATM-TRK (Circuit Emulation Service Circuit Pack)".
	PASS	The ATM TN230X circuit pack is in-service.

ATM-INTF (TN2305/6)

MO Name (in Alarm Log)	Alarm Level	Initial Command to Run	Full Name of MO
ATM-INTF	WARNING	test board UUCSSpp	ATM interface board

The TN2305/6 is recognized by the system as an ATM Interface board (ATM-INTF) if it has not been assigned a personality through the **add atm-pnc** command or **add atm trunk** command. ATM-INTF does not have a maintenance strategy associated with it, although the Control Channel test can be run on demand by using the **test board** command, and the board can be reset by using the **reset board** command. The board is visible through the **list config** and **change circuit-pack** commands.

The circuit packs listed in Table 10-76 are ATM-EI boards if they are administered to serve the ATM Port Network Connectivity (ATM-PNC).

Table 10-76. ATM-EI circuit packs for ATM-PNC

Circuit pack	Fiber	Echo cancellation	Release
TN2305	Multi mode	Y	7.1
TN2306	Single mode	Y	7.1

NOTE:
Always replace an ATM-EI circuit pack with the same type.

LED states

The ATM-INTF circuit pack has the standard red, green and yellow LEDs. The red and green LEDs have the traditional use: red indicates an alarm condition, green means maintenance testing in progress. The yellow LED is not used. The possible LED states are listed below:

LED	Condition	LED
Red	Board is not healthy	Solid on never off
Red Green	Board is in the processes of booting	Red: solid on Green: 200 ms on 200 ms off
Green	Maintenance is running tests on the board	Solid on (off when maintenance completed)
Yellow	Fiber LOS	100 ms on, 100ms off
Yellow	Signal to the ATM switch is down	500 ms on, 500 ms off

Error Log Entries and Test to Clear Values

Table 10-77. ATM-INTF Error Log Entries

Error Type	Aux Data	Associated Test	Alarm Level	On/Off Board	Test to Clear Value
23(a)	0	None	WAR	OFF	
125(b)		None	MIN	ON	
217(c)	0	None	WAR	OFF	

Notes:

a. Error Type 23: ATM Expansion Interface circuit pack is administered through a **change circuit-pack** command, but has not been inserted into the system. Insert the circuit pack.

b. Error Type 125: A wrong circuit pack is located in the slot where this circuit pack is logically administered. To resolve this problem, either remove the wrong circuit pack or insert the logically administered circuit pack.

c. Error Type 217: The ATM circuit pack is physically present but has not been given a personality. Remove the circuit pack or administer it using the **add atm pnc** command or **add atm trunk** command.

System Technician-Demanded Tests: Descriptions and Error Codes

Failure of this test is not logged in the Error Log.

Order of Investigation	Short Test Sequence	Long Test Sequence	D/ND[1]
Control Channel Loop Around Test (#52)	X	X	N

1 D = Destructive, ND = Non-destructive

Control Channel Loop-Around Test (#52)

This test is non-destructive. This test queries the circuit pack for its circuit pack code and vintage and verifies its records.

Table 10-78. TEST #52 Control Channel Loop-Around Test

Error Code	Test Result	Description/Recommendation
2000	ABORT	Response to the test request was not received within the allowable time period.
2100	ABORT	System resources required to run this test are not available.
2500	ABORT	Internal system error 1. Retry the command at 1-minute intervals for a maximum of 5 times.
	FAIL	The circuit pack failed to return the circuit pack code or vintage. 1. Retry the command a few times for a maximum of 5 times. 2. If the problem continues to fail, reset the circuit pack. 3. Retry the command a few times for a maximum of 5 times.
	PASS	Communication with this circuit pack is successful.
Any	NO BOARD	This is normal if the test is being done when: ■ the board is not physically in the system. ■ the system is booting up. Otherwise, there is some inconsistency in the data kept in the system. 1. Verify that the board is physically in the system. 2. Verify that the system is not in the process of booting up. 3. Retry the command at 1-minute intervals for a maximum of 5 times.

ATM-SGRP (ATM Signaling Group)

MO Name (in Alarm Log)	Alarm Level	Initial Command to Run[1]	Full Name of MO
ATM-SGRP	MINOR	test sig-group *grp#*	ATM-CES Signaling Group
ATM-SGRP	WARNING	test sig-group *grp#*	ATM-CES Signaling Group

1 *grp#* is the signaling group number (1-166); the test sequence can be either short or long.

This Maintenance Object (ATM-SGRP) applies when ATM signaling groups have been administered on an ATM circuit pack.

Table 10-79 outlines the differences between ATM interface circuit packs:

Table 10-79. R7 ATM-SGR circuit packs

Circuit pack	Channel types	Interface	Fiber	Echo cancellation
TN2305	B and D channels	24 or 32 channel	Multimode	Y
TN2306	B and D channels	24 or 32 channel	Single mode	Y

The TN2305 and TN2306 ATM Interface circuit boards are referred to as TN230X for the remainder of this MO.

An ATM Signaling Group is a collection of B-channels for which a given ISDN-PRI Signaling Channel Port (ATM D-channel) carries signaling information. ATM B-channels (ATM-BCH) carry voice or data and are assigned to ISDN trunks. For more information see ''ATM-TRK (Circuit Emulation Service Circuit Pack)''.

The operation of the entire ATM signaling group depends on several other entities:

- the ATM-DCH signaling channel port
- the TN230X Interface circuit pack on which the D-channels reside
- the system link that is carried over the packet bus to the processor

When there are problems with ATM-SGRP (ATM signaling group), also investigate:

- "ATM-DCH (ATM D-Channel Port)"
- "ATM-BCH (ATM B-Channel Trunk)"
- SYS-LINK
- PKT-BUS

Error Log Entries and Test to Clear Values

Table 10-80. ATM-SGRP Signaling Group Error Log Entries

Error Type	Aux Data	Associated Test	Alarm Level	On/Off Board	Test to Clear Value
0	0	Any	Any		test sig-group *grp#*
1 (a)	Any	None			
18 (b)		MO busied out			
257 (c)	Any	None			test sig-group *grp#*
769 (d)	Any	Primary Signaling Link Hardware Check (#636)			test sig-group *grp#*
1281 (e)	Any	Secondary Signaling Link Hardware Check (#639)			test sig-group *grp#*
1793 (f)	Any	Layer 2 Status (Test #647)	WNG	OFF	test sig-group *grp#*
2305 (g)	Any	Remote Layer 3 Query (Test #637)	MINOR	OFF	test sig-group *grp#*
3585 (h)	Port number	None			
3840 - 3928 (i)	Port number	None			

Notes:

a. Error Type 1: switch sent a message to the far-end switch or terminal adapter, and the far-end did not respond in the allotted time. Possible causes include link failure and congestion or outage at the far-end. The Aux Data field contains Layer 3 protocol information used by internal counters.

If no other symptoms are present, no action is required. If Layer 3 communication is down:

a. Check for alarms and errors against link components

b. Check out other errors against ATM-SGRP, ATM-TRK, and other hardware components on the link.

There is no test to clear these errors. The error counter is decremented by 1 every 15 minutes.

b. Error Type 18: the ATM circuit pack has been busied out (either **busyout atm sig-grp** or **busyout board UUCSS**).

1. Release the ATM signaling group (**release atm sig-grp**) or the circuit pack (**release board UUCSS**).

c. Error Type 257: the primary signaling channel connection has been lost for more than 90 seconds.

- The associated B-channels are placed in the ISDN Maintenance/Far-End state.
- The B-channels are not usable for outgoing calls, although incoming calls can be accepted.
- The switch automatically attempts to recover the signaling link.

1. Pay particular attention to the results of Test #636 (Primary Signaling Link Hardware Check) in the test sequence.

- When the link does recover, the B-channels are negotiated back to the In-Service state and their alarms are retired.

2. When this error occurs, the state of the Signaling Group is changed to out-of-service (verify using the **status sig-group** command).

d. Error Type 769: signaling link hardware error.
Service-affecting failures of the hardware used to transport the D-Channel are reported to the ATM CES Signaling Group MO. Maintenance logs this error, places the D-Channel into the OOS state, and raises a board-level alarm. The D-Channel is returned to service and the alarm is retired once the hardware failure condition clears.

e. Error Type 1281: Degraded PVC Alarms indicate that a particular Permanent Virtual Circuit, or signaling group, has encountered sufficient errors to exceed firmware thresholds. Operations can continue but at a lower level of reliability or performance. Firmware filters these alarms so that only one is reported active at a given time. The following in-line error is considered a Degraded PVC Alarm:

- Excessive AAL - The AAL layer is experiencing an excessive number of errors in trying to reconstruct Service Data Unit (SDUs). Possible causes:
  - Something may be wrong with the ATM switch.
  - The communication paths on the other side of the ATM switch may be noisy.
  - The sending node might not be healthy.
  - Could be a problem with congestion on the ATM switch.

f. Error Type 1793: failure of the Layer 2 Query Test for the primary signaling channel.

- Excessive AAL - The AAL layer is experiencing an excessive number of errors in trying to reconstruct Service Data Unit (SDUs). Possible causes:
  - Something may be wrong with the ATM switch.
  - The communication paths on the other side of the ATM switch may be noisy.
  - The sending node might not be healthy. It could also be a problem with congestion on the ATM switch.

g. Error Type 2305: the Remote Layer 3 Query Test (#637) failed. A specific message was sent to the far-end switch, and it did not respond within the allotted time.

1. Investigate elements of the ATM D-channel(s) (ATM-DCH) for both this switch and the Far-end switch.

If Test #637 fails twice in a row, the B-channels are alarmed and made unavailable for outgoing calls (although incoming calls are still accepted). When Test #637 succeeds and the Far-end switch starts responding properly, the ATM Trunk (B-channels) are placed back into normal operation and their alarms retired.

h. Error Type 3585: A SERV or SERV ACK ISDN D-channel message has been received by a non-US-type interface (country option other than `1` on the DS1 administration form). However, these messages are used only for duplex NFAS signaling, which is supported by country protocol 1.

Thus, there may be a mismatch in administration between the local and far-end switches.

1. Consult with the customer’s network provider to determine whether the D-channel is set up correctly on the far-end switch.

i. Error Type 3840-3928: These error types are used to report certain error messages received by the ATM-SGRP Signaling Group for one of its associated B-channels. The Aux Data field is the port number of the B-channel from which the message was received.

The error code generated equals 3840+*x*, where *x* is a Cause Value defined by the ISDN PRI Specification. Note that there is no Test to Clear Value for these error types; selected ISDN cause values are placed in the log when they are received, but no direct action or alarming is performed solely in response to receiving them. They provide added data that may prove useful when tracking down obscure networking and routing problems. Table 10-81 provides more information about this range of Error Codes:

Table 10-81. Descriptions and repair recommendations (Error Types 3840-3928)

Error Code	Description	Recommendation
3842	A request has been made to use a transit network or common carrier that cannot be accessed.	From the circuit pack and port number (in the Aux Data field), determine the trunk group against which the error was reported. 1. Check all routing patterns containing this trunk group for validity of interexchange carriers requested (IXC field).
3846	The far-end switch has indicated that the B-channel (trunk) is not acceptable for use in the call for which it was requested.	This could indicate ■ an administration problem (for example, the local switch and the far-end switch have different B-channels administered) ■ a normal race condition (for example, the local switch has requested use of a B-channel which the far-end switch had just reserved for use on another call). 1. From the circuit pack and port number (in the Aux Data field), determine the trunk group against which the error was reported. 2. Issue the **status trunk** command for the indicated trunk. 3. Refer to Table 10-65 on page 10-195 in "ATM-BCH (ATM B-Channel Trunk)" for recovery suggestions.
3858	Similar to Error Type 1. The switch sent an ISDN message to the far-end switch or terminal adapter which did not respond in the allotted time.	1. Check for alarms and errors against link components 2. Check out other errors against "ATM-SGRP (ATM Signaling Group)", "ATM-TRK (Circuit Emulation Service Circuit Pack)", and other hardware components on the link.

Continued on next page

Table 10-81. Descriptions and repair recommendations (Error Types 3840-3928) — *Continued*

Error Code	Description	Recommendation
3878	The far-end switch has indicated that the network is not functioning correctly and that the condition may last a relatively long period of time (for example, immediately re-attempting the call may not be successful).	1. From the circuit pack and port number (in the Aux Data field, determine the trunk group against which the error was reported. 2. Consult with the network provider to determine the nature and expected duration of the out of service condition. 3. Consider modifying all routing patterns containing this trunk group, to route calls around the network which is out of service.
3890	A request to use a network service (for example, SDN) has been denied. Administration somewhere on the network has indicated that the requested service has not been subscribed to or purchased for this trunk.	This could indicate ■ a local administration problem ■ a mismatch between the local administration and that of the network provider. 1. From the circuit pack and port number (in the Aux Data field), determine the trunk group against which the error was reported. 2. Display the trunk group form. If the trunk group is Call-by-Call (the `Service Type` field is `cbc`), check all routing pattern forms containing this trunk group to see if the Service/Feature fields contain the correct network services purchased for this trunk. If the trunk group is not Call-by-Call, check that the `Service Type` field contains the single network service purchased for this trunk. 3. If local administration appears correct, consult with the customer and/or the network provider to determine the services that the customer has subscribed to for this trunk group.

Continued on next page

Table 10-81. Descriptions and repair recommendations (Error Types 3840-3928) *— Continued*

Error Code	Description	Recommendation
3892	Protocol detail; may offer a clue if customer is having ISDN calls denied with an unexpected intercept tone.	1. If customer is complaining of unexpected intercept tones when accessing ISDN trunks or PRI endpoints and no other cause can be found, escalate the problem and provide the next tier with this Error Log information.
3894	Protocol detail; may offer a clue if customer is having ISDN calls denied with an unexpected intercept tone.	1. Eliminate any transitory state mismatch problems (**test port UUCSSpp** for the trunk port shown in the Aux Data field). Test #256 (Service State Audit) is the important test in the sequence. 2. If Test #256 passes yet the customer continues to complain of unexpected intercept tones when accessing ISDN trunks or PRI endpoints and no other cause can be found, escalate the problem and provide the next tier with this Error Log information.
3905	Protocol detail; may offer a clue if customer is having ISDN calls denied with an unexpected intercept tone.	1. If customer is complaining of unexpected intercept tones when accessing ISDN trunks or PRI endpoints and no other cause can be found, escalate the problem and provide the next tier with this Error Log information.

Continued on next page

Table 10-81. Descriptions and repair recommendations (Error Types 3840-3928) — *Continued*

Error Code	Description	Recommendation
3906	Protocol detail; may offer a clue if customer is having ISDN calls denied with an unexpected intercept tone.	1. If customer is complaining of unexpected intercept tones when accessing ISDN trunks or PRI endpoints and no other cause can be found, escalate to the problem and provide the next tier with this Error Log information.
3909	A request to use a network service has been made, but the network has rejected the request because the requested service is not implemented.	1. Follow the recommendations listed above for Error Type 3890.
3928	A call was denied because of a basic incompatibility between the type of call and either the facilities selected by the routing pattern or the called user itself.	This error might be helpful as a clue if the customer complains of receiving unexpected intercept tone after accessing ISDN trunks or PRI endpoints. 1. Determine the trunk group from the circuit pack and port number (in the aux data field) 2. check the BCC fields of the pertinent routing patterns. 3. Also, investigate whether or not the calling and called endpoints are compatible (for example, some ISDN switches may not allow a voice station to call a data extension).

System Technician-Demanded Tests: Descriptions and Error Codes

Always investigate tests in the order presented in the table below when inspecting errors in the system. By clearing error codes associated with the Primary Signaling Link Hardware Check, for example, you may also clear errors generated from other tests in the testing sequence.

Table 10-82. System Technician-Demanded Tests: ATM-SGRP

Order of Investigation	Short Test Sequence	Long Test Sequence	D/ND[1]
Primary Signaling Link Hardware Check (#636)	X	X	ND
Layer 2 Status Test (#647)	X	X	ND
Remote Layer 3 Query Test (#1291)	X	X	ND

1 D = Destructive, ND = Non-destructive

Primary Signaling Link Hardware Check (#636)

The ATM-SGRP Signaling Group D-Channel port depends on the health of the TN230X interface circuit pack on which it resides. This test fails if there are problems with either the ATM-DCH (D-channel port) maintenance object or the TN230X circuit pack. Investigate the ATM TN230X circuit pack (ATM-TRK) anytime there are problems with the ATM D-channel port (ATM-DCH).

Table 10-83. Primary Signaling Link Hardware Check (#636)

Error Code	Test Result	Description/Recommendation
	ABORT	Internal system error Retry the command at 1-minute intervals a maximum of 5 times.
8	FAIL	There is a problem with the ATM TN230X Circuit Pack or the ATM Signaling Channel (D-Channel), preventing any ISDN trunk calls until the problem is resolved. 1. Consult the procedures for the TN230X Circuit Pack (ATM-TRK) and the ATM D-channel (ATM-DCH).
	PASS	The basic physical connectivity of the D-channel is intact and functional. 1. Try this test repeatedly to ensure the link is up and to uncover any transitory problems.

Layer 2 Status Test (#647)

The Layer 2 Status Test checks the layer 2 status of the ATM-SRG Signaling Channel (D-channel). This test fails when:

- there is a hardware failure
- there is a facility problem
- the D-channels are not administered correctly

The Signaling Link Hardware Check (Test #637) and the Remote Layer 3 Query Test (#1291) detects most problems caused by hardware failures or incorrect administration.

Table 10-84. TEST #647 Layer 2 Status Query Test

Error Code	Test Result	Description/Recommendation
1132	ABORT	Internal system error. The port location for the D-channel is not known. This condition should not be possible since an administered ATM circuit pack must be specified when a Signaling Group is administered: 1. Retry the command at one minute intervals a maximum of five times.
1134	ABORT	Internal system error. The associated ATM circuit pack is not administered. This condition should not be possible, since an administered ATM circuit pack must be specified when administering a Signaling Group. 1. Retry the command at one minute intervals a maximum of three times.
2500	ABORT	Internal system error 1. Retry the command at one minute intervals a maximum of five times.

Continued on next page

Table 10-84. TEST #647 Layer 2 Status Query Test — *Continued*

Error Code	Test Result	Description/Recommendation
1	FAIL	Layer 2 of the signaling channel is down 1. Examine the results of the Signaling Test (#636) and follow recommendations provided there. 2. If Test #636 (Primary Signaling Link Hardware Check) passes, the Layer 2 Query test may still fail if the Signaling Channel at the far end has not been administered correctly or if the Signaling Channel has been busied out. 3. Verify that the Signaling Channel (D-channel) at the far end has been administered correctly. 4. Verify that the ATM-DCH port used for the D-channel has not been busied out at the far end.
3	FAIL	The D-Channel is down. 1. Examine the results of the Primary Signaling Link Hardware Check (#636) and follow recommendations provided there. 2. If Test #636 (Primary Signaling Link Hardware Check) passes, the Layer 2 Query test may still fail if the Signaling Channel at the far end has not been administered correctly or if the Signaling Channel has been busied out. 3. Verify that the Signaling Channel (D-channel) at the far end has been administered correctly. 4. Verify that the ATM-DCH port used for the Primary and Secondary D-channels has not been busied out at the far end.
	PASS	The Primary Signaling Channel is up.

Remote Layer 3 Query (#1291)

This test queries the far-end switch or terminal adapter to determine if the signaling connection is functioning properly at Layer 3. It selects a B-channel in the in-service or maintenance service state and sends an ISDN Layer 3 SERVice message, which requires a response from the far end (similar to performing Test #256 on an ISDN trunk). The test is not performed if there are no B-channels in an appropriate ISDN service state (for example, when none are administered or they are all out of service).

NOTE:
The service state can be displayed by using the **status trunk <trunk group/trunk member>** or **status pri-endpoint** command.

As is the case with Test #256 for an ISDN trunk, a PASS only indicates that a message was composed and sent to the far-end switch or terminal adapter. The ISDN PRI Specification allows up to 2 minutes for a response. Check the Error Log for ATM-SGRP errors of type 2305 for evidence of a Remote Layer 3 Query failure.

Test #636 checks the health of the D-channels and ATM Interface Circuit Packs. This test goes one step further by checking the communication path from the processor, through the TDM/Packet Bus and ATM Interface circuit pack, and on to the far-end switch or terminal adapter. A special ISDN message is sent to the far-end switch or terminal adapter, which must respond within a specified amount of time. This test is designed to ensure that the communication path between the switch and the far-end is up and operational, and that the two endpoints can properly exchange ISDN control messages.

Table 10-85. TEST #1291 Remote Layer 3 Query

Error Code	Test Result	Description/Recommendation
1006	ABORT	There are no associated B-channels in an ISDN “in-service” or “maintenance” service state. This is a NORMAL ABORT. 1. Administer or release an ISDN trunk or PRI endpoint before retrying the test. For an ATM trunk, use the **status trunk *grp#/mbr#*** command to verify the ISDN trunk state. 2. Retry this test when at least one B-channel is in the “in-service” or “maintenance” states.
1113	ABORT	The signaling channel is down. Therefore, no messages can be sent to the far-end switch or terminal adapter. 1. Examine the results of Tests #636 and follow recommendations provided there.
2100	ABORT	Could not allocate the necessary system resources to run this test. 1. Retry the command at 1-minute intervals a maximum of 5 times.

Continued on next page

Table 10-85. TEST #1291 Remote Layer 3 Query — *Continued*

Error Code	Test Result	Description/Recommendation
2500 or none	ABORT	Internal system error or administration problem 1. Determine if any B-channels are administered. 2. If there are none, then this is a normal ABORT, since this test cannot run unless at least one B-channel is administered. 3. If at least one B-channels is administered, there is an internal system error. Retry the command at 1-minute intervals a maximum of 5 times.
	FAIL	Internal system error 1. See description of ABORT with Error Code 2500.
	PASS	A message was sent to the far-end switch or terminal adapter. The ISDN PRI specification allows up to 2 minutes for a reply. 1. Check the Error Log for ATM-SGRP errors of type 2305 for evidence of a Remote Layer 3 Query failure. 2. If no new errors were logged since this test was run, then this switch and the far-end switch can exchange call control messages. 3. If there is still a problem with a particular ATM trunk, busyout the trunk and run the long test sequence, paying particular attention to the results of Test #258 (ISDN Test Call).

ATM-TRK (Circuit Emulation Service Circuit Pack)

MO Name (in Alarm Log)	Alarm Level	Initial Command to Run[1]	Full Name of MO
ATM-TRK	MAJOR	test board UUCSS	ATM TRUNK (ATM Circuit Emulation Service)
ATM-TRK	MINOR	test board UUCSS	ATM TRUNK (ATM Circuit Emulation Service)
ATM-TRK	WARNING	test board UUCSS	ATM TRUNK (ATM Circuit Emulation Service)

1 UU is the universal cabinet number (1 for PPN, 2 - 3 for EPNs). C is the carrier designation (A, B, C, D, or E). SS is the number of the slot in which the circuit pack resides (01 to 21).

This maintenance object explains how you test and repair TN230x ATM Interface circuit packs (TN2305 and TN2306) that have been administered as virtual ISDN-PRI trunks for ATM Circuit Emulation Service (CES). The maintenance instructions for TN230x circuit packs that have been administered as Expansion Interfaces for WAN connectivity are in the ATM-INTF (TN2305/6) maintenance object.

Description

The TN2305 and TN2306 (Table 10-86 on page 10-227) are dual-purpose ATM circuit packs that can be administered as either personality:

- "ATM Circuit Emulation Service" or virtual ISDN-PRI signaling trunks.
- Expansion Interfaces (ATM-EI) for Port Network Connectivity (ATM-PNC) between the PPN and the EPNs.

Either circuit pack "personality" requires SONET OC-3 or SDH STM-1 fiber cable connections between the circuit pack and the ATM switch. As a trunk board, it supports direct connection between ATM CES circuit packs without an intervening ATM switch.

Table 10-86. R7 ATM-TRK circuit packs

Circuit pack	Channel types	Interface	Fiber	Echo cancellation
TN2305	B and D channels	24 or 32 channel	Multi mode	Y
TN2306	B and D channels	24 or 32 channel	Single mode	Y

NOTE:
TN230x circuit packs are not interchangeable.

ATM Circuit Emulation Service

Under ATM Circuit Emulation Service (CES), you simulate ISDN-PRI circuits by assigning ports to *signaling groups*. Each signaling group represents a PRI circuit, and the ports in the group represent the D-channel and B-channels of that circuit. TN230x circuit packs support up to 248 ports per circuit pack.

Virtual D-channels. Non-facility associated signaling is not supported under ATM-CES, so you must reserve one port in each signaling group for use as a D-channel (channel 24 when emulating a T-1 ISDN facility, channel 16 when emulating an E-1 facility). The D-channel can be any physical port from 9 to 32.

Virtual circuits. The TN230x can support a varied number of virtual circuits, depending on the switch and the administration of the circuit pack. Table 10-87 lists the possibilities for various Avaya DEFINITY Server models.

Table 10-87. Circuit and channel capacities, for each DEFINITY model

Model	Ports	Emulated circuits (signaling groups)	Channels/circuit	Virtual D-channels	Virtual B-channels
R6csi	248	1 to 8	24 (T1), 31 (E1)	1-8	6-240
R6si	248	1 to 8	24 (T1), 31 (E1)	1-8	6-240
R6r	248	1 to 8	24 (T1), 31 (E1)	1-8	6-240

Virtual trunk groups. You cannot bundle physical DS1 ISDN-PRI circuits and virtual ATM-CES circuits into the same trunk groups. Virtual circuits can only be assigned to all-virtual, all-ATM trunk groups. Table 10-88 lists the possible trunk-group capacities.

Table 10-88. ATM CES capacities by DEFINITY model

Model	Ports per trunk group (max)	Trunk groups per switch (max)	Trunks per switch (max)
R6csi	99	99	400
R6si	99	99	400
R6r	255	666	400

Table 10-89 shows the ATM CES capacities for both T1 and E1 circuits.

Table 10-89. Ports available for trunking, for each ISDN facility type

Type	Channels per signaling group (trunk)	Max. signaling groups (trunks) per circuit pack	Max. available ports	Reserved ports	Total ports
T1:	24	8	192	ports 1-8	256
E1:	31	8	248	ports 1-8	256

LEDs

The ATM circuit pack LEDs give you a visual indication of the condition of the TN230x circuit pack (Table 10-90).

Table 10-90. ATM-TRK LED interpretation

LEDs	Condition	LED status
Red	Error (alarm logged)	On
Red and Green	Booting (LEDs being tested)	Blinking (on 200 ms, off 200 ms)
Green	Test/maintenance in progress	On
Yellow	Fiber Loss of Signal (LOS), LOF, MS_RDI, MS_AIS, LCD, HP_RDI, HP_AIS, LOP, PSC	Blinking fast (100 ms on, 100 ms off)
Yellow	Signal to ATM switch down	Blinking slowly (500 ms on, 500 ms off)
Yellow	One or more CES signaling groups administered	On
Yellow	CES signaling group not administered or not reporting to firmware	Off

ATM-TRK-related commands

Table 10-91 lists commands that can be useful in troubleshooting ATM errors and alarms.

Table 10-91. ATM CES troubleshooting commands

Command	Description
display circuit-packs *cabinet*	Shows the circuit packs in the cabinet, identifying ATM Trunk as well as ATM-EI boards. “ATM Interface” boards have not been administered as CES or PNC.
display atm ports *UUCSSppp*	Shows the 256 ports on the ATM board with the corresponding signaling and trunk group.
list configuration atm	Lists the ATM boards, identifying equipment location, board code, type, and vintage.
list configuration trunks	Lists boards identifying assigned ports. While the ATM board is listed, the 256 ports are not.
busyout/release atm signaling-group	Busyout or release of an ATM signaling group within a trunk group.
status atm signaling-group	Show current status of an ATM signaling group.
status trunk-group	Shows status of the trunk group (ATM signaling groups are part of trunk groups).

Error Log Entries and Test to Clear Values

Table 10-92. ATM-TRK Error Log entries

Error Type	Aux Data	Associated Test	Alarm Level	On/Off Board	Test to Clear Value
0	0	Any	Any		test board UUCSS
1(a)		None	MIN	ON	
18(b)	0	busy out board UUCSS	MIN	ON	release board UUCSS
23(c)	0	None	MIN	ON	
125(d)		None	MIN	ON	
257(e)	Any	Control Channel Loop Test (#52)	MIN	ON	test board UUCSS r 2
513(f)	Any	ATM Cross talk Test (#1298)	MIN	ON	test board UUCSS l r 1
769(g)	35	ATM Error Query Test #1259	WRN	OFF	test board UUCSS
770(g)	25	ATM Error Query Test #1259	WRN	OFF	test board UUCSS

Continued on next page

Table 10-92. ATM-TRK Error Log entries — *Continued*

Error Type	Aux Data	Associated Test	Alarm Level	On/Off Board	Test to Clear Value
771(h)	26	ATM Error Query Test #1259	WRN	OFF	test board UUCSS
1281(i)		ATM Board Error Query Test (#1259)	WRN/ MIN	OFF	test board UUCSS r 1
1537(j)	12	None	WRN/ MIN	ON	
1538(k)	0	None	WRN/ MIN	ON	reset board UUCSS
1794(l)	13	None	MIN	ON	
2049(m)	15	None	WRN	OFF	test board UUCSS
2306(n)		None			
2561(o)		Packet interface test (#598)	MIN	ON	test board UUCSS r 2
2817(p)	1-24	ATM Board DSP test (#1293)	WRN/ MIN	ON	test board UUCSS
2818(p)	1-24		WRN/ MIN	ON	test board UUCSS
3330(q)	3		MIN	OFF	
3585(r)		ATM Board Error Query test (#1259)	WRN/ MIN	ON	test board UUCSS l
3841(s)	Any	None			
3842(t)	11	None			
3843 (u)		None			
3999(v)	Any	None			

Notes:

a. **Error Type 1:** the ATM-TRK circuit pack does not appear to be in its assigned slot.

   1. Make sure that the ATM-TRK circuit pack is installed correctly seated in the slot administered for the ATM trunk.

b. **Error Type 18:** the ATM circuit pack is busied out.

   1. Run **release board UUCSS**.

c. **Error Type 23:** an ATM trunk is administered, but the corresponding ATM-TRK circuit pack does not appear to be physically installed.

   1. Make sure the ATM-TRK circuit pack is installed and correctly seated in the slot.

d. **Error Type 125:** an ATM trunk is administered but a non-ATM-TRK circuit pack is installed in the corresponding slot. You have two options:

- Replace the incorrect circuit pack with an ATM-TRK circuit pack.
- Or re-administer the slot for the circuit pack that is physically present, locate the slot where the ATM-TRK circuit pack is actually installed, and re-administer the ATM trunk.

e. **Error Type 257:** Control Channel Loop Test #52 failed. The circuit pack is not properly connected with the control channel on the TDM bus.

1. Take the corrective action specified by Test #52.

f. **Error Type 513:** ATM Crosstalk Test (#1298) failed. The board is writing to or reading from a TDM time slot that is not allocated to the board, or the Digital Signal Processor (DSP) selected for this test has malfunctioned.

1. Run **test board UUCSS**.
2. Take the corrective action specified for Test #1298.

g. **Error Type 769, 770:** the ATM switch is requesting too many LAPD retransmissions (off-board ATM cell corruption errors).

Error Type	Aux Data	Description
769	35	LAPD excessive retransmission requests
770	25	ATM uncorrectable cell headers - threshold

1. Check the connections between the fiber cable, the ATM-TRK circuit pack, and the ATM switch.
2. See PKT-BUS (Packet Bus) for test and corrective procedures.
3. Determine what type of fiber is installed between the ATM-TRK circuit pack and the ATM switch.

If	Then
There is multimode fiber	Check the length of the fiber. If the cable is longer than 2 km, it is probably causing the errors.
There is single-mode fiber or the length of the multimode fiber is less than 2 km	The source of the errors can lie in the ATM facility, the ATM-TRK circuit pack, or the far-end circuit pack.

4. Perform ATM loopback tests on the near-end ATM-TRK circuit pack and on the far-end circuit pack or ATM switch.

If	Then
The ATM-TRK circuit pack fails the loopback test.	The problem is in the ATM-TRK circuit pack. Replace the circuit pack.
The far-end circuit pack or ATM switch fails the loopback test.	The problem is in the far-end circuit pack or ATM switch. Consult the circuit-pack or ATM switch documentation for advice.
The equipment at each end of the ATM span passes the loopback test	The problem is somewhere in the ATM span. Lack of bandwidth can be forcing an intermediate ATM switch to drop cells.

5. Check capacity and peak bandwidth consumption for the ATM span.

If	Then
The capacity of the span is inadequate or bandwidth consumption is too high.	Reduce traffic on the Avaya DEFINITY Server to ensure that it is using no more that its subscribed bandwidth.

h. **Error Type 771:** the ATM switch is sending cells with unknown Virtual Path-Identifier (VPI) and Virtual Channel-Identifier (VCI) addresses.

   1. Make sure that the ATM-TRK circuit-pack address is administered identically on the ATM switch and the Avaya DEFINITY Server.

i. **Error Type 1281:** Board major signals error (loss of high-level signal). The far-end has detected a major problem in transmissions originating from the ATM-TRK circuit pack. The possible Aux Data values for this software counter are listed in Table 10-93.

Table 10-93. Error type 1281 Aux Data and repair procedures

Aux Data	Alarm Description	Repair procedure
15	SYSCLOCK failed	The board is not locked to the TDM backplane clock signal. This is probably due to a Tone Clock problem. Check for TDM-BUS or TONE-BD errors in the Error Log. If no other problems are present, reset the circuit pack (**reset board UUCSS**)

Continued on next page

Table 10-93. Error type 1281 Aux Data and repair procedures — *Continued*

Aux Data	Alarm Description	Repair procedure
16	Loss of Signal: LOS	The fiber is not connected properly to the ATM-TRK board or ATM switch (or to the multiplexer section [MUX] if present).It is possible that the board transceivers are not functioning properly. Run **test board UUCSS** command. If Test #1259 fails with Error Code 16, connect a fiber back-to-back in a looped mode (one strand of fiber connecting the transmit transceiver to the receive transceiver of the board) and see if the yellow LED flash goes away. If it does the problem is off-board. If the yellow LED continues to flash, replace the circuit pack.
17	Loss of Frame: LOF	The fiber signal cannot obtain or maintain STM-1/OC-3 framing. Try to more the fiber on the ATM switch side to a different port. If the problem persists, reset the circuit pack (**reset board UUCSS**).
18	Multiplexer Section Alarm Indication Signal: MS_AIS	There is a major problem on the far end (between multiplexer section [MUX] and the switch) that prohibits the circuit pack from sending a valid signal. See if the ports at the MUX and/or the ATM switch are connected snugly. Run **test board UUCSS** command If Test #1259 fails with Error Code 18, connect a fiber back-to-back in a looped mode (one strand of fiber connecting the transmit transceiver to the receive transceiver of the board) and see if the yellow LED flash goes away. If it does the problem is off-board. If the yellow LED continues to flash, replace the circuit pack; if the error persists, escalate the problem.
19	Multiplexer Section Remote Defect Indicator: MS_RDI	The far-end is detecting a major problem with the signal that this board is transmitting. Make sure the ATM switch port (or a MUX port, if present between ATM switch and the ATM-TRK board) is the same as the ATM-TRK circuit pack's cable interface Run **test board UUCSS** command. If Test #1259 fails with Error Code 19, connect a fiber back-to-back in a looped mode (one strand of fiber connecting the transmit transceiver to the receive transceiver of the board) and see if the yellow LED flash goes away. If it does the problem is off-board. If the yellow LED continues to flash, replace the circuit pack; if the error persists, escalate the problem.

Continued on next page

Table 10-93. Error type 1281 Aux Data and repair procedures — *Continued*

Aux Data	Alarm Description	Repair procedure
20	Loss of pointer: LOP	ATM framer chip is unable to access the payload part of the signal. Reset the board (**reset board UUCSS**). If the error persists replace the board.
21	Path Signal Error (PSL) (STM1/SONET)	The incoming signal payload is not set up for transmission of ATM data. Make sure the ATM switch port (or a MUX port, if present between ATM switch and the ATM-TRK board) is the same as the ATM-TRK circuit pack's cable interface.
22	High-level Path Alarm Indication Signal: HP_AIS	The payload is invalid. Make sure the ATM switch port (or a MUX port, if present between ATM switch and the ATM-TRK board) is the same as the ATM-TRK circuit pack's cable interface. Run **test board UUCSS**. If Test #1259 fails with Error Code 22, connect a fiber back-to-back in a looped mode (one strand of fiber connecting the transmit transceiver to the receive transceiver of the board) and see if the yellow LED flash goes away. If it does the problem is off-board. If the yellow LED continues to flash, replace the circuit pack.
23	High-level path Remote defect Indicator: HP_RDI	The far-end is detecting a major problem with the signal that this board is transmitting. The transmitted payload is invalid. Make sure the ATM switch port (or a MUX port, if present between ATM switch and the ATM-TRK board) is the same as the ATM-TRK circuit pack's cable interface. Run **test board UUCSS** command; if the Test #1259 fails with Error Code 23, connect a fiber back-to-back in a looped mode (one strand of fiber connecting the transmit transceiver to the receive transceiver of the board) and see if the yellow LED flash goes away. If it does the problem is off-board. If the yellow LED continues to flash, replace the circuit pack.
24	Loss of cell delineation (LCD)	On board ATM framer chip is not able to frame cells based on the cell header. Reset the board (**reset board UUCSS**). If the error persists, replace the board.

Continued on next page

Table 10-93. Error type 1281 Aux Data and repair procedures — *Continued*

Aux Data	Alarm Description	Repair procedure
27	SIGCON_DOWN ATM switch high level signal.	The board cannot communicate with the ATM switch. Busyout the board (busyout board UUCSS). Test the board (**test board long UUCSS**). If Test #1260 fails, replace the board. If Test #1260 passes, make sure the ATM address on both the DEFINITY and the ATM switch sides are the same for this board. If the address is the same, change the port on the ATM switch side. If the error is resolved, the problem is on the ATM switch port.

j. **Error Type 1537:** LANHO bus timeout. The circuit pack is transmitting too many bytes on the LAN bus for a single frame. This can be due to:

- an on-board fault.
- a faulty data received on one of the circuit pack's external ports.

If the error occurs 3 times in 10 minutes, the board is isolated from the Packet Bus and the board is alarmed. To clear the alarm:

1. Restore this circuit pack to the Packet Bus with this command sequence:

   a. busyout board UUCSS

   a. reset board UUCSS

   a. test board UUCSS long

   a. release board UUCSS

2. If the problem persists and there are no PKT-BUS or port alarms, replace the circuit pack.

k. **Error Type 1538:** The ATM-TRK circuit pack is hyperactive (sending an abnormal number of control messages to the processor). Use the following command sequence for this ATM-TRK circuit pack:

1. **busyout board UUCSS**
2. **reset board UUCSS**
3. **test board UUCSS long**
4. **release board UUCSS**
5. If this error persists, replace the circuit pack.

l. Error Type 1794: LANHO transmit FIFO overflow. The circuit pack's transmit buffers have overflowed.

1. Run **test board UUCSS r 5**.

If	Then
Test #598 fails	Replace the circuit pack.

m. **Error Type 2049:** ACL Link Failure (link is down). The ATM Control Link (ACL) has failed, communication has been interrupted between the SPE and the ATM-TRK circuit packs on the system, and signaling-group parameters are not communicated across the packet bus.

1. Check the PKT-BUS (Packet Bus) and SYS-LINK (System Link) maintenance objects, and follow the repair procedures indicated.
2. Run **test board UUCSS** against the ATM-TRK circuit pack.

If	Then
Test 598 fails.	Follow the repair procedures suggested for that test.

n. **Error Type 2306:** too many parity errors in data received from the LAN/packet bus.

1. Run **test board UUCSS**.

If	Then
Test 598 fails.	Follow the repair procedures suggested for that test
Test 598 passes.	See the PKT-BUS (Packet Bus) maintenance object, and perform the specified repair.
There are no errors against the packet bus maintenance object.	This can be a transient condition. Do nothing now, but escalate if the error occurs repeatedly.

o. **Error Type 2561:** Packet Interface Loop Around Test (598) Failure. The ATM-TRK circuit pack has failed, the packet bus has a minor alarm active, or the packet bus is out of service.

1. Run **test board UUCSS**.

If	Then
Test 598 fails.	Follow the repair procedures suggested for that test
Test 598 passes.	See the PKT-BUS (Packet Bus) maintenance object, and perform the specified repair.
There are no errors against the packet bus maintenance object.	This can be a transient condition. Do nothing now, but escalate if the error occurs repeatedly.

p. **Error Type 2817, 2818:** DSP failure detected along the circuit path.

1. Run **test board UUCSS**.
2. Follow the repair procedures suggested for Test #1293.

Error Type	Description
2818	One or more DSPs failed. The Aux Data field contains the ID number of DSP that failed
2817	DSP test failure. The Aux Data field contains the following information about the failed DSPs: X is the number of talker DSPs Y is the number of listener DSPs Z is the number of echo-cancelling DSPs

q. **Error Type 3330:** LANHO critical error. The circuit pack reports that the on-board LANHO chip is insane (possibly due to a problem in Packet Bus arbitration, in the transmission line frame, or in the circuit pack itself). The circuit pack cannot talk to the Packet Bus.

1. Check for PKT-BUS alarms.

If	Then
There is a packet-bus alarm.	There is probably a packet-bus problem, particularly if other circuit packs on the packet bus report the same error. See the PKT-BUS (Packet Bus) maintenance object and the packet-bus fault-isolation and recovery sections of the maintenance manual for repair procedures.
There are no packet-bus alarms.	Run the following command sequence: **busyout board UUCSS** **reset board UUCSS** **test board UUCSS long** **release board UUCSS**
The problem persists.	Replace the ATM-TRK circuit pack.

r. **Error Type 3585:** Major board alarm; failure of critical components involved in the operation of the circuit pack. The circuit pack has failed, and the switch can no longer recognize it.

Aux Data	Description
1	ATM framer chip failure
2	NCE failed
4	TDM PLD failed
5	All DSPs on the circuit pack have failed
6	Receive Network Processor (RNP) failed
7	Transmit Network Processor (TNP) failed
8	MEMORY read/write failure
9	DUART failure

1. Run **test board UUCSS long**.

If	Then
Test #1259 fails with Error Code XXYY and XX is an AUX value in the preceding table	Replace the ATM-TRK circuit pack.
The system does not recognize the circuit pack	Replace the ATM-TRK circuit pack.

s. **Error Type 3841:** the ATM-TRK circuit pack received an unrecognized message from the switch and responded with an inconsistent down-link error message.

   1. Do nothing. This error does not affect service.

t. **Error Type 3842:** LANHO Receive FIFO Overflow error; the packet bus is delivering data to the ATM-TRK circuit pack faster than the circuit pack can distribute it to the endpoint.

   1. Do nothing. The circuit pack can recover by itself.

u. **Error Type 3843:** The firmware on the circuit pack is reporting a resource that is to low. This error does not affect the service and no action is required.

v. **Error Type 3999:** circuit pack sent a large number of control channel messages to the switch within a short period of time.

If	Then
Error Type 1538 is also present	Circuit pack is taken out of service
If Error Type 1538 is not present	Circuit pack is *not* taken out of service, but has generated 50% of the messages necessary to be considered hyperactive. This can be normal during heavy traffic. If the error is logged during light traffic, it can indicate a problem with the circuit pack or the equipment attached to it.

System Technician-Demanded Tests: Descriptions and error codes

Investigate problems in the order presented. When you clear one of the error codes associated with a test, you clear errors generated by other tests in the testing sequence. If you clear errors out of order, you can lose important information.

Table 10-94. System Technician-Demanded Tests: ATM-TRK

Order of Investigation	Short Test Sequence	Long Test Sequence	Reset Board Sequence	D/ND[1]
ATM Board Time Of Day Update (#1261)		X		ND
Connection Audit Test (#50)		X		ND
Control Channel Loop Test (#52)		X		ND
Packet Interface Loop Around Test (#598)	X	X		ND
ATM DSP Test (#1293)	X	X		ND
ATM Board Framer Looparound Test (#1260)		X		D
ATM Board Error Query Test (#1259)	X	X		ND
ATM Cross Talk Test (#1298)		X		ND
ATM Board Reset (#1256)			X	D

1 D = Destructive, ND = Nondestructive

Connection Audit Test (#50)

Nondestructive (in a sane switch environment).

The Connection Audit test updates TDM time slots. It sends network-update Control Channel Message Set (CCMS) messages that tell the ATM-TRK circuit pack to listen to, talk to, or disconnect particular time slots.

The test passes if software successfully sends the downlink network-update messages. It aborts otherwise.

CAUTION:
Though normally nondestructive, this test could unintentionally tear down an active call if the connection-manager software's tables are corrupt.

Table 10-95. TEST #50 Connection Audit Test

Error Code	Test Result	Description/Recommendation
None 2100	ABORT	System resources required for this test are not available. Retry the command up to 5 times at 1-minute intervals.
1019	ABORT	The test aborted because a test was already running on the port. Retry the command up to 5 times at 1-minute intervals.
	FAIL	Internal system error Retry the command up to 5 times at 1-minute intervals.
	PASS	The circuit pack has been updated with its translation.
0	NO BOARD	The test could not relate the internal ID to the port (no board). This could be due to incorrect translations, no board is inserted, an incorrect board is inserted, or an insane board is inserted. Check the board translations. If the ATM-TRK circuit pack is not administered, run **add atm trunk UUCSS**. If the ATM-TRK circuit pack is administered correctly, check the error log. If ATM-TRK circuit pack is hyperactive, shut down, and reseat the circuit pack to force re-initialization. If the ATM-TRK circuit pack is correctly inserted, run **busyout board**. Run **reset board**. Run **release busy board**. Run **test board long** to re-establish the linkage between the internal ID and the port.

Control Channel Loop Test (#52)

The nondestructive Control Channel Loop Test is part of the maintenance subsystem's Common Port Board Testing feature. The Common Port Board test sends board vintage queries to a port circuit pack and checks the responses. CCMS downlink notifications tell the circuit pack which TDM Bus (A or B) carries the control channel and which carries the touch tones.

The test passes if the port circuit pack responds. The test aborts if the circuit pack does not respond. The test fails otherwise.

Table 10-96. Control Channel Test #52

Error Code	Test Result	Description/Recommendation
2000	ABORT	Test request timed out.
2100	ABORT	Could not allocate needed system resources.
2500	ABORT	Internal system error Retry the command up to 3 times at 1-minute intervals.
	FAIL	The ATM circuit pack responded incorrectly. Retry the command up to 3 times at 1-minute intervals. If the test continues to fail, reset the ATM-TRK circuit pack (**reset board UUCSS**). If test continues to fail, replace the circuit pack or transceiver.
	PASS	The ATM-TRK circuit pack is communicating correctly with the software.
0	NO BOARD	Circuit pack not detected. Check the error log for Error 125 (wrong board) or Error 131 (no board), and correct any errors found. Make sure that the ATM-TRK circuit pack is properly translated and inserted. Check for Error 1538 (hyperactivity). If hyperactive, run **reset board UUCSS**. Run the test again. If it fails, replace the ATM-TRK circuit pack, and retest.

Packet Interface Loop Around Test (#598)

This nondestructive test checks the ATM-TRK circuit pack's packet-bus interface. The LANHO chip sends data through the bus and back to itself. Table 10-151 describes this test, substituting "CES mode" for "PNC mode."

If the data received is consistent with the data sent, the test passes. The test does not run if the packet bus in the specified port network has a minor alarm, or is out of service, or if the packet bus in the PPN is out of service.

Table 10-97. Packet Interface Loop Around Test (#598)

Error Code	Test Result	Description/Recommendation
1144	ABORT	The packet bus in the PPN has a major alarm against it. Run **display alarms** and **display errors**. Perform the PKT-BUS repair procedures associated with the alarms. Retry the command.
2000	ABORT	Test request timed out. Retry the command up to 3 times at 1-minute intervals. If the test fails repeatedly, run **reset board UUCSS**. If the test continues to fail, replace the ATM-TRK circuit pack.
2012	ABORT	Internal system error
2100	ABORT	Could not allocate needed system resources. Retry the command up to 5 times at 1-minute intervals.
ANY	FAIL	Data packet not received correctly by the ATM Interface circuit pack. Retry the command up to 5 times at 1-minute intervals. If the test continues to fail, replace the ATM-TRK circuit pack.
	PASS	The Packet Interface Test passed.

ATM Board Reset (#1256)

This test is destructive.

This test checks the sanity of the angel processor using the Sanity and Control Interface (SAKI) test (Common Port Board test #53). It resets the circuit pack if the SAKI test fails and runs the test again.The ATM Board Reset test passes if SAKI can successfully reset and retest the board.

Before running the SAKI test, you must:

- Move synchronization off the ATM-TRK circuit pack
- Busyout the ATM-TRK circuit pack

The test aborts if the ATM-TRK circuit pack is supplying synchronization.

Table 10-98. ATM Board Reset (#1256)

Error Code	Test Result	Description/Recommendation
1005	ABORT	Wrong circuit pack configuration to run this test. The ATM CES Trunk Interface circuit pack provides timing for the system and cannot be reset without major system disruptions. Set synchronization to another ATM CES trunk circuit pack or to the Tone-Clock circuit pack and test again.
1015	ABORT	Test cannot be run because the ATM-TRK circuit pack has not been busied out. Busyout out the circuit pack (**busyout board UUCSS**). Repeat the test (**test board UUCSS long**).
None	ABORT	Could not allocate the required system resources Retry the command up to 5 times at 1-minute intervals. If the test continues to abort escalate the problem.
2000	ABORT	Sanity test timed out. Wait 5 minutes. Then see if ATM-TRK circuit pack is visible to the system by running **list configuration all**. If the ATM-TRK circuit pack is visible (**list configuration all**), run the test again, and escalate if the problem recurs. If the ATM-TRK circuit pack is not visible to the system (**list configuration all**), re-seat the ATM-TRK circuit pack, and retest. If the ATM-TRK circuit pack is still not recognized by the system, replace the board.
2100	ABORT	Could not allocate required system resources Retry the command up to 5 times at 1-minute intervals.
2500	ABORT	Internal system error Try to reset the circuit pack (**reset board UUCSS**).

Continued on next page

Table 10-98. ATM Board Reset (#1256) — *Continued*

Error Code	Test Result	Description/Recommendation
1	FAIL	The circuit pack failed to reset
2	FAIL	The circuit pack failed to restart. Retry command. If the problem persists, replace the ATM-TRK circuit pack.
	PASS	The ATM-TRK circuit pack is successfully reset.
0	NO BOARD	No board detected. Check the error log for Error 125 (wrong board) or Error 131 (no board), and perform the appropriate repair, if needed. Ensure that the board is properly translated and inserted. Check for Error 1538 (hyperactivity). If hyperactive, run **reset board UUCSS**. Run the test again. If it fails, replace the ATM-TRK circuit pack, and retest.

ATM Board Error Query Test (#1259)

This nondestructive ATM Error Query Test retrieves the most severe, active, on- and off-board problem from the ATM-TRK circuit pack's firmware and increments error counts in the Error Log.

The test passes if there are no errors and fails otherwise. A passing test clears the software counters; a failure increments the counter associated with the problem that caused the failure and clears the others.

Table 10-99. ATM Board Error Query Test (#1259)

Error Code	Test Result	Description/Recommendation
2000	ABORT	Test request timed out.
2031	ABORT	SCD failure. Unable to sent down-link message.
2100	ABORT	Could not allocate needed system resources.
2500	ABORT	Internal system error Retry the command up to 3 times at 1-minute intervals.
XXYY	FAIL	On-board error XX (Table 10-100) and/or off-board error YY (Table 10-101 on page 10-248). Examine the error logs and repair any errors found.
	PASS	The ATM circuit pack has passed this test. No service effecting errors/alarms have been detected on board.
0	NO BOARD	ATM-TRK circuit pack not found Check the error log, and correct Error 125 (wrong board) or Error 131 (no board), if found. Make sure that the board is properly translated and inserted. Check for hyperactivity (Error 1538). Run **reset board UUCSS** if hyperactive. Run the test again. If it fails, replace the board, and retest.

Aux Data XX

Table 10-100. Aux Data XX for ATM Board Error Query Test (#1259)

If XX=	Then
1	ATM framer chip failed
2	NCE chip failed
3	LANHO critical error
4	TDM Programmable Logic Device Failed
5	All on-board DSPs failed
6	Receive Network Processor failed
7	Transmit Network Processor failed
8	Memory read failed
9	Dual UART chip failed
10	LANHO receive parity error
11	LANHO FIFO over flow error
12	LAN bus time out.
13	LANHO Xmit FIFO overflow error
14	One or more on-board DSPs failed

Aux Data YY

Table 10-101. Aux Data YY for ATM Board Error Query Test (#1259)

If YY=	Then
15	Back plane clock failed
16	Loss of signal
17	Loss of frame
18	MS alarm indication signal error
19	MS remote defect indicator error
20	Loss of Pointer
21	Path Signal Level mismatch

Continued on next page

Table 10-101. Aux Data YY for ATM Board Error Query Test (#1259) — *Continued*

If YY=	Then
22	High-level Path alarm indication signal
23	High-level Path remote defect indicator
24	Loss of Cell Delineation
25	Uncorrectable headers sent by the ATM switch.
26	Too many cells with invalid VPI/VCI combination.
27	The signalling link between the board and the ATM switch is down.
34	AAL5 Excessive retransmission requests -per VC
35	LAPD Excessive retransmission requests - per VC
37	ATM CLP (Cell Loss Priority) Bit - see MO ATM-NTWK
38	ATM Congestion Indicator - see MO ATM-NTWK
39	ATM Cell Underrun - see MO ATM-NTWK
40	ATM Cell Overrun - see MO ATM-NTWK
41	ATM Lost Cells - see MO ATM-NTWK

ATM Board Framer Looparound Test (#1260)

Destructive

This test verifies the board's circuit (Time Division Multiplexing) and packet paths using an on-board, dummy virtual circuit. Before running the test, you must

- busyout the ATM-TRK circuit pack (**busyout board UUCSS**) and
- switch synchronization (**change synchronization**) from the ATM-TRK circuit pack

If the ATM-TRK circuit pack is supplying synchronization, the test aborts.

The test sends a digital counter from one of the tone generators via one of the TDM bus time slots. The ATM framer interface converts this digital counter to ATM cells and loops them back internally. The ATM-TRK circuit pack converts the cells back to a digital counter and sends it to the tone receiver for verification. If the circuit pack passes the circuit check, the software checks the packet path by sending a packet from the packet-interface circuit pack to the ATM-TRK circuit pack via the ATM protocol stack.

Table 10-102. ATM Board Framer Looparound Test (#1260)

Error Code	Test Result	Description/Recommendation
1002	ABORT	Time slots could not be allocated. Traffic could be heavy or time slots could be out-of-service. Run **display errors**, and perform repairs associated with TDM-BUS errors. Retry the command up to 3 times at 1-minute intervals.
1003	ABORT	Tone receiver could not be allocated. Run **display errors**, and perform the repairs associated with TTR-LEV and TONE-PT errors. The test cannot run unless there is at least one Tone Detector available on the network that holds the ATM-TRK circuit pack. Retry the command up to 3 times at 1-minute intervals.
1015	ABORT	ATM-TRK circuit pack not busied out Busyout the ATM circuit pack. Rerun the command.
1033	ABORT	ATM-TRK circuit pack not found See if the switch can see the circuit pack. Run status Trunk Group. Retry the command.
1139	ABORT	Major alarm on the EPN packet bus Run **display alarms**, and perform the repairs associated with PKT-BUS errors. Run **display errors**, and perform the repairs associated with PKT-BUS errors. Retry the command.
1141	ABORT	Packet-interface circuit pack out of service See PKT-INT (Packet Interface Circuit Pack).
1144	ABORT	Major alarm on the PPN packet bus Run **display alarms**, and perform the repairs associated with PKT-BUS. Run **display errors**, and perform the repairs associated with PKT-BUS. Retry the command.

Continued on next page

Table 10-102. ATM Board Framer Looparound Test (#1260) — *Continued*

Error Code	Test Result	Description/Recommendation
1394	ABORT	ATM-TRK circuit pack out of service Run ATM Board Reset Test #1256.
2000	ABORT	Request timed out. Retry the command up to 3 times at 1-minute intervals.
2060	ABORT	Packet-bus link has failed. Retry the command up to 3 times at 1-minute intervals. If the test continues to abort, run **display errors**, and perform the repairs associated with PKT-INT errors.
2100	ABORT	Could not allocate the necessary system resources to run this test.
2500	ABORT	Internal system error Retry the command up to 3 times at 1-minute intervals.
1	FAIL	Test tone not detected over the looparound; packet-path test aborted. Test the active tone clock on the port network, and verify that a tone is reaching the ATM-TRK circuit pack. If not, correct the condition. Run **test board UUCSS long**. If the test continues to fail, replace the ATM-TRK circuit pack or transceiver. Rerun **test board UUCSS long**.
2	FAIL	TN1655 Packet Interface circuit pack could not detect the correct data packet. Test the TN1655 Packet Interface circuit pack to verify that it is functioning properly. If not, correct the condition. Run **display errors**, and perform the repairs associated with DS1 CONV-BD errors, if applicable. Run **display alarms**, and perform the repairs associated with DS1 CONV-BD alarms, if applicable. Run **test board UUCSS long**. If this test continues to fail, replace the ATM-TRK circuit pack. Run **test board UUCSS long**.

Continued on next page

Table 10-102. ATM Board Framer Looparound Test (#1260) — *Continued*

Error Code	Test Result	Description/Recommendation
3	FAIL	Distorted tone returned Test the active tone clock on the port network, and verify that a tone is reaching the ATM-TRK circuit pack. If not, correct the condition. Run **test board UUCSS long**. If the test continues to fail, replace the ATM-TRK circuit pack. Run **test board UUCSS long**.
4	FAIL	Unable to create TDM-path loop. Retry the command up to 3 times at 1-minute intervals. If this test continues to fail, replace the ATM-TRK circuit pack. Run **test board UUCSS long**.
5	FAIL	Unable to create packet-path loop. Retry the command up to 3 times at 1-minute intervals. If this test continues to fail, replace the ATM-TRK circuit pack. Rerun **test board UUCSS long**.
6	FAIL	A previously established looparound was not released. Run **reset board UUCSS**. Retry the command up to 3 times at 1-minute intervals. If this test continues to fail, replace the ATM-TRK circuit pack. Rerun **test board UUCSS long**.
	PASS	The non-optical parts of the ATM-TRK circuit pack are functioning properly.
0	NO BOARD	ATM-TRK circuit pack not found Check the error log for Error 125 (wrong board) or Error 131 (no board), and correct as necessary. Check that the board is properly translated and inserted. Check for Error 1538 (hyperactivity), and run **reset board UUCSS** if necessary. Rerun **test board UUCSS long**. If the test fails, replace the board, and rerun **test board UUCSS long**.

ATM Board Time Of Day Update (#1261)

The nondestructive ATM-TOD-UPD test updates the system time that the ATM-TRK circuit pack uses for SDH/SONET performance monitoring and synchronizes the ATM-TRK circuit pack with the DEFINITY system clock. This test is run during initialization, scheduled maintenance, and craft long test.

Table 10-103. ATM Board Time Of Day Update (#1261)

Error Code	Test Result	Description/Recommendation
2031	FAIL	The attempt to send the message to the ATM-TRK circuit pack was not successful.
2500	FAIL	Internal system error. Did not send the time of day information to the board. Retry the command up to 3 times at 1-minute intervals. If the test aborts with the same error code, escalate the problem.
	PASS	The ATM-TRK circuit pack is successfully updated with system time. If the **status port-network** command still indicates that this link is down, it is possible that one or both of the ATM-TRK circuit packs have been busied out. If the link still does not come up, reset one or both ATM-TRK circuit packs on the link.
0	NO BOARD	No board detected. Check the error log for wrong board (Error 125) or no board (Error 131). Resolve either of these issues, if applicable. Check that the board is properly translated and inserted. If so, check for hyperactivity (Error 1538). If hyperactive, use the **reset board UUCSS** command. Run the test again. If it fails, the board could be bad. Replace the board and retest.

ATM Board DSP Test (#1293)

Nondestructive

There are three kinds of digital signal processors (DSPs): talkers, listeners, and echo cancelers.Talkers put data on the TDM bus, listeners take data off the TDM bus, and echo cancelers filter out echoes of the main transmission. Firmware allocates DSPs in sets of three (one of each type), up to a maximum of 8 sets. This has three parts, one for each type of DSP. If the test fails for all DSPs, a MAJOR alarm is raised. If the test fails for one or more DSPs, a MINOR alarm is raised. If a DSP is busy, the test passes for that DSP. The test aborts if system resources are not available. Each part of the test returns the number of DSPs that passed or failed. This test run during initialization, error analysis testing, periodic, scheduled, and craft short and long testing.

Table 10-104. ATM Board DSP Test (#1293)

Error Code	Test Result	Description/Recommendation
1002	ABORT	Could not allocate time slots. Traffic could be heavy or time slots could be out-of-service Run **display errors**, and follow associated repair procedures for TDM-BUS. Retry the command up to 3 times at 1-minute intervals.
1003	ABORT	Could not allocate a tone detector. Too few tone detectors present or tone detectors out-of-service. Run **display errors**, and follow the repair procedures associated with any TTR-LEV (TTR Level) errors that appear. Make sure that there is at least one tone detector on the network that holds the ATM-TRK circuit pack. Resolve any TONE-PT (Tone Generator) errors listed in the Error Log. Retry the command up to 3 times at 1-minute intervals.
1962	ABORT	All DSPs are busy. This is a very unlikely event. Retry the command up to 3 times at 1-minute intervals.
2000	ABORT	Test timed out. If the ATM-TRK circuit pack is in standby, reset the board and run the test again after the ATM-TRK circuit pack is inserted. Examine the Error Log for Error 1218 (bad DSP). Run the test again.

Continued on next page

Table 10-104. ATM Board DSP Test (#1293) — *Continued*

Error Code	Test Result	Description/Recommendation
2100	ABORT	Could not allocate required system resources.
2302	ABORT	Inconsistent uplink message from the ATM-TRK circuit pack.
2500	ABORT	Internal system error Retry the command up to 5 times at 1-minute intervals.
2752	ABORT	Circuit pack not a TN2305A/2306A.
XYZ	FAIL	There is at least one bad DSP on the board. The ***X*** value indicates the number of bad talker DSPs, ***Y*** indicates the number of bad listener DSPs and ***Z*** indicates the number of bad echo canceler DSPs. Test the Active Tone-Clock on the port network that contains the ATM-TRK circuit pack for dial-tone. Repair as needed. Repeat the short test on the ATM-TRK circuit pack. If the test continues to fail, check for service-affecting MINOR alarms. If a MINOR alarm is raised for Error Type 2817 or 1818, replace the circuit pack. If a WARNING alarm is raised, this is a non-service-affecting error, and the circuit pack can still process calls.
XY8	PASS	The test passed for some or all DSPs. XY8 indicates the number of talker, listener, and echo-canceler DSPs for which the test passed (the rest of the DSPs were skipped). The ***X*** value indicates the number of good talker DSPs, ***Y*** indicates the number of good listener DSPs and ***Z*** indicates the number of good echo canceler DSPs.
0	NO BOARD	No board detected. Check the Error Log for wrong board Error 125 (wrong board) or Error 131 (no board). Replace or insert the circuit pack if necessary. Check that the board is properly translated and inserted. If Error 1538 (hyperactivity) is listed in the Error Log, and run **reset board UUCSS**. Run the test again, and, if it fails, replace the ATM-TRK circuit pack. Retest.

ATM Cross Talk Test (#1298)

This nondestructive ATM Cross Talk test makes sure that TDM time slots are correctly allocated to connections. It is useful for diagnosing one-way or noisy connections. The test fails if the TDM programmable logic and/or the interface to the DSP is not operating properly. The test can take more than 10 minutes.

Table 10-105. ATM Crosstalk Test (#1298)

Error Code	Test Result	Description/Recommendation
	ABORT	Could not allocate required system resources. Retry the command up to 5 times at 1-minute intervals.
1002	ABORT	Could not allocate time slots. Traffic could be heavy or time slots could be out-of-service. Identify and correct TDM-bus errors (if any) using the procedures in the TDM-BUS (TDM Bus) maintenance object. Repeat the test up to 5 times at 1-minute intervals.
1003	ABORT	Could not allocate a tone receiver. Too few tone detectors installed or tone detectors out-of-service. Identify and correct any TTR-LEV (TTR Level) errors listed in the Error Log. Resolve any TONE-PT (Tone Generator) errors listed in the Error Log. Retry the test up to 5 times at 1-minute intervals a maximum.
2000	ABORT	Test timed out.
2100	ABORT	Could not allocate required system resources Retry the command 5 times at 1-minute intervals.
1962	ABORT	All TALKER DSPs are busy.
2302	ABORT	Inconsistent uplink message from the ATM-TRK circuit pack. Retry the command up to 3 times at 1-minute intervals.
2752	ABORT	The circuit pack in this location is not a TN2305A/2306A.
1-8, None	FAIL	ATM-TRK circuit pack writing on unauthorized TDM time slots. The error code indicates the number of TALKER DSPs that are at fault. These DSPs cannot be used again until this test of the ATM DSP Test (#1293) tells the circuit pack to use them again. Retry the command up to 3 times at 1-minute intervals. If the failure persists, replace the circuit pack.
1-8	PASS	ATM-TRK circuit pack not talking to un-authorized time slots on the TDM bus. The error code indicates the number of TALKER DSPs tested.

AXA12-BD/ADX8D-BD/AXD12-BD (AUDIX Circuit Packs)

MO Name (in Alarm Log)	Alarm Level	Initial Command to Run	Full Name of MO
AXA12-BD	MINOR	test board UUCSS[1] sh	AUDIX Circuit Pack
AXA12-BD	WARNING	test board UUCSS sh	AUDIX Circuit Pack
ADX8D-BD	MINOR	test board UUCSS sh	AUDIX Circuit Pack
ADX8D-BD	WARNING	test board UUCSS sh	AUDIX Circuit Pack
AXD12-BD	MINOR	test board UUCSS sh	AUDIX Circuit Pack
AXD12-BD	WARNING	test board UUCSS sh	AUDIX Circuit Pack

1 *UU is the universal cabinet number (1 for PPN; 2-22 for EPNs). C is the carrier designation (A, B, C, D, or E). SS is the number of the slot in which the circuit pack resides)(01 to 21).*

The TN 568 is a EMBEDDED AUDIX circuit pack that occupies 2 slots on a port carrier. The tests below apply only to switch-side maintenance, which tests circuit pack components related to the TDM bus interface. The AUDIX system has an extensive maintenance strategy of its own that is described in EMBEDDED AUDIX System Maintenance, 585-300-110.

AXA12-BD:

On G3r V7 systems, TN568 EMBEDDED AUDIX circuit packs (sometimes called Embedded AUDIX) operating in control-link mode appear to the system as TN746 Analog Line circuit packs with vintage greater than 50. For circuit-pack-level problems, see XXX-BD. The maintenance strategy for ports on the TN568 operating in control-link mode is described in ADXCL-PT.

ADX8D-BD:

On G3r V7 systems, TN568 EMBEDDED AUDIX circuit packs operating in 8-port digital mode appear to the system as TN754 Digital Line circuit packs with vintage greater than 50. For circuit-pack-level problems, see XXX-BD. The maintenance strategy for ports on the TN568 operating in 8-port digital mode is described in ADXDP-PT.

ADX12-BD:

The ADX12-BD maintenance object represents a TN568 EMBEDDED AUDIX circuit pack operating in 12-port digital (DP) mode. On G3r V7 systems, TN568 EMBEDDED AUDIX circuit packs operating in 12-port digital mode appear to the system as TN2181 Digital Line circuit packs with vintage greater than 50. For circuit-pack-level problems, see XXX-BD. Port-level problems are covered by ADX12D-PT.

AXA12-RS/ADX8D-RS/AXD12-RS (AUDIX Reserve Slots)

MO Name (in Alarm Log)	Alarm Level	Initial Command to Run	Full Name of MO
AXA12-RS	NONE	NONE	TN568 12-port analog reserve slot
ADX8D-RS	NONE	NONE	TN568 8-port digital reserve slot
AXD12-RS	NONE	NONE	TN568 12-port digital reserve slot

There are no tests associated with these MOs. Both the **test board** and **busy out board** commands abort when either is attempted on a reserved slot. An error message indicates that the slot is associated with the circuit pack that the TN568 is emulating, but the requested operation is not valid. If there are errors logged against these maintenance objects, see XXX-BD.

The TN568 circuit pack connects to the switch through a single slot in the backplane; however, the number of slots physically occupied by the circuit pack is supplied by the board when inserted. The TN568 is 2 slots wide: the functional slot and a reserve slot. The reserve (blank) slot to the left of the functional slot is a place holder on the switch and has no interaction with the switch.

These MOs are place holders for the extra slot needed for the EMBEDDED AUDIX board. Each instance of these MOs represents a reserve slot associated with the respective circuit pack mode in which the TN568 (EMBEDDED AUDIX) is working. They are used for embedded AUDIX and emulation of respective port types.

BRI-BD/LGATE-BD (ISDN-BRI Line Circuit Pack)

MO Name (in Alarm Log)	Alarm Level	Initial Command to Run[1]	Full Name of MO
BRI-BD	MAJOR	test board PCSS l	ISDN-BRI Line Circuit Pack
BRI-BD	MINOR	test board PCSS l	ISDN-BRI Line Circuit Pack
BRI-BD	WARNING	test board PCSS sh	ISDN-BRI Line Circuit Pack
LGATE-BD	MAJOR	test board PCSS l	DEFINITY Lan Gateway
LGATE-BD	MINOR	test board PCSS l	DEFINITY Lan Gateway
LGATE-BD	WARNING	test board PCSS sh	DEFINITY Lan Gateway

1 Where P is the port network number (1 for PPN and 2 or 3 for EPN); C is the carrier designation (A, B, C, D, or E); and SS is the address of the slot in the carrier where the circuit pack is located (01, 02, etc.).

NOTE:
Some of the information in this section is reserved for future use.

CAUTION:
A detailed flowchart for isolating and resolving Packet Bus faults is included in Chapter 9, “Packet Bus Fault Isolation and Correction”. This flowchart, along with the other information presented in the chapter, can help in resolving problems that involve more than a single station or circuit pack. Whenever the repair procedures for this Maintenance Object refer to Packet Bus and/or Packet Control maintenance, be sure to reference Chapter 9, “Packet Bus Fault Isolation and Correction”, in addition to the relevant MO documentation.

ISDN-BRI Line is a packet port circuit pack that provides access to ISDN-BRI endpoints. The ISDN-BRI Line circuit pack supports 12 ports, each of which provides access to ISDN stations. Voice and circuit-switched data from the ISDN stations are carried on the Time Division Multiplex (TDM) Bus. Signaling is carried over the Packet Bus.

LEDS

The ISDN-BRI Line circuit pack performs extensive initialization tests and lights both the red and green LEDS during the initialization testing. See Chapter 7, “LED Interpretation”, for more details on circuit pack status LEDs.

Hardware Error Log Entries and Test to Clear Values

Table 10-106. BRI-BD Error Log Entries

Error Type	Aux Data	Associated Test	Alarm Level	On/Off Board	Test to Clear Value
0[1]	0	Any	Any	Any	test board PCSS sh r 1
1(a)	Any	None	MINOR	ON	
18(b)	0	busyout board PCSS	WARNING	OFF	release board PCSS
23(c)	0	None	WARNING	OFF	
257(d)	65535	Control Channel Loop Test (#52)	MINOR	ON	test board PCSS r 20
513(e)	4352 to 4357				
769(f)	4358				
1025(g)	4363	NPE Audit Test (#50)			
1293 to 1294 (h)	46088 to 46096	SAKI Sanity Test (#534)	MINOR	ON	See footnote (h)
1537 to 1538 (i)	46082		MINOR	ON	
1793 (j)	46080		MINOR	ON	
1794 (j)	46094		MINOR	ON	
1795 (j)	46085		MINOR	ON	
2306 (j)		LANBIC Receive Parity Error Counter Test (#595)			
3330 (k)	46083		MINOR	OFF	
3840 (l)	4096 to 4101				
3843 (m)	46097				
3999 (n)	Any	None			

1 Run the Short Test Sequence first. If all tests pass, run the Long Test Sequence. Refer to the appropriate test description and follow the recommended procedures.

Notes:

a. This error indicates the circuit pack totally stopped functioning or it was physically removed from the system.

NOTE:
The alarm is logged approximately 11 minutes after the circuit pack has been removed and/or SAKI Sanity Test (#53) fails.

If the circuit pack is not in the system, insert a circuit pack (in the same slot as the error indicates) to resolve this error. Or, if the circuit pack is in the system and the red LED is on, then follow the instructions for “Red (alarm)” in the “Control and Port Circuit Pack Status LEDs” section in Chapter 7, “LED Interpretation”. (Also, refer to the “Handling Control Circuit Packs” section in Chapter 5, “Routine Maintenance Procedures”.

b. This circuit pack has been busied out via the **busyout board PCSS** command.

c. Port(s) has(have) been administered on this circuit pack but the circuit pack is not physically present.

d. This error indicates transient communication problems between the switch and this circuit pack. Execute the **test board PCSS** command and refer to the repair procedures for the Control Channel Loop Around Test (#52).

e. An on-board hardware failure has been detected by the circuit pack.

The reported aux data values correspond to the following detected errors:

4352	External RAM error
4353	Internal RAM error
4355	ROM Checksum error
4357	Instruction set error

Reset the circuit pack by executing the **busyout board PCSS** and **reset board PCSS** commands. When it is reset, the circuit pack executes a set of tests to detect the presence of any of the above faults. The detection of one of these errors during initialization causes the circuit pack to lock-up and appear insane to the system. See the repair procedure in footnote (a) for error type 1.

f. This error is reported by the circuit pack when it detects a program logic error. While no action is required, this error may lead to errors of other types being reported against this circuit pack.

g. This error is reported by the circuit pack when it cannot update NPE memory and read it back. This error type can be ignored, but may lead to errors of other types being reported against this circuit pack.

h. A critical hardware failure has been detected on the circuit pack. Reset the circuit pack via the **busyout board PCSS** and **reset board PCSS** commands. If the Circuit Pack Restart Test (#594) passes, then the on-board circuitry is healthy. Retire the alarm via the **test board PCSS long clear** command. If the Circuit Pack Restart Test (#594) fails, replace the circuit pack.

The reported error types correspond to the following detected errors:

1293	On-board auxiliary processor insane
1294	Internal memory access error

i. These error types are reported when the following errors are detected:

1537	Frame overrun at Packet Bus interface. This condition may be caused by an on-board fault or by faulty data received on one of the circuit pack's external ports. If any of the ports on this circuit pack are alarmed, refer to the repair procedures for those maintenance objects.
1538	Circuit packet is hyperactive; that is, it is flooding the switch with messages sent over the control channel. The circuit pack is taken out-of-service when a threshold number of these errors is reported to the switch. Clear the alarm via the following commands: **busyout board PCSS**, **reset board PCSS**, **test board PCSS long clear**, **release board PCSS**. If the error recurs within 10 minutes, then replace the circuit pack.

j. These errors indicate that the circuit pack is having problems transmitting data to the Packet Bus.

1793	Parity errors are detected when transmitting data to the Packet Bus.
1794	Overflow of Packet Bus transmit buffers has occurred.
1795	Circuit pack cannot find end of frame when transmitting to Packet Bus. Clear the alarm via the following commands: **busyout board PCSS**, **reset board PCSS**, **test board PCSS long clear**, **release board PCSS**. If the error recurs within 10 minutes, then replace the circuit pack.
2306	This error occurs when the circuit pack detects an error in a received frame from the packet bus. These errors are most likely caused by a packet bus problem, but may be due to a circuit pack fault.An invalid Link Access Procedure Data (LAPD) frame error occurs if the frame contains a bad Cyclical Redundancy Checking (CRC), is greater than the maximum length, or violates the link level protocol.When bus parity errors are reported, the LANBIC Receive Parity Error Counter Test (#595) should be performed to determine if the condition had cleared. Refer to the "PKT-BUS (Packet Bus)" Maintenance documentation to determine if the problem is isolated to this circuit pack or if the problem is caused by Packet Bus faults.

k. A critical failure has been detected in the Packet Bus interface of the circuit pack. This failure may be due to either a Packet Bus fault or an on-board fault. If the Packet Bus is alarmed, refer to the “PKT-BUS (Packet Bus)” section and Chapter 9, “Packet Bus Fault Isolation and Correction” for recommended repair procedures. The probability of this error being related to Packet bus problems increases with the number of ISDN-BRI circuit packs displaying this error.

   If the Packet Bus is not alarmed, reset the circuit pack via the **busyout board PCSS** and **reset board PCSS** commands. If the Circuit Pack Restart Test (#594) passes, then the on-board circuitry is healthy. Retire the alarm via the **test board PCSS long clear** command. If the Circuit Pack Restart Test (#594) fails, replace the circuit pack. If the problem persists after complying with the above instructions, then follow normal escalation procedures.

l. These errors are not service-affecting. No action is required. These errors are reported by the circuit pack when it receives a bad control channel message from the switch. The auxiliary data identifies the following error events:

4096	Bad major heading
4097	Bad port number
4098	Bad data
4099	Bad sub-qualifier
4100	State inconsistency
4101	Inconsistent downlink message

m. This error is not service-affecting. No action is required.

3843	Bad translation RAM detected, but call continues by using another translation location.

n. Error type 3999— Indicates that the circuit pack sent a large number of control channel messages to the switch within a short period of time. If error type 1538 is also present, then the circuit pack was taken out-of-service due to hyperactivity. If error type 1538 is not present, then the circuit pack has not been taken out-of-service, but it has generated 50% of the messages necessary to be considered hyperactive. This may be completely normal during heavy traffic periods. However, if this error type is logged when the circuit pack is being lightly used, it may indicate a problem with the circuit pack or the equipment attached to it.

System Technician-Demanded Tests: Descriptions and Error Codes

Always investigate tests in the order presented in the following tables when inspecting errors in the system. By clearing error codes associated with the *Control Channel Loop Around Test,* for example, you may also clear errors generated from other tests in the testing sequence.

Order of Investigation	Short Test Sequence	Long Test Sequence	D/ND[1]
Control Channel Loop-Around Test (#52)	X	X	ND
NPE Audit Test (#50)		X	ND
LANBIC Receive Parity Error Counter Test (#595)		X	ND

1 D = Destructive; ND = Nondestructive

NPE Audit Test (#50)

Refer to the repair procedure described in the “XXX-BD (Common Port Circuit Pack)” Maintenance documentation as NPE Audit Test (#50).

Control Channel Loop Around Test (#52)

Refer to the repair procedure described in the “XXX-BD (Common Port Circuit Pack)” Maintenance documentation as Control Channel Loop Around Test (#52).

SAKI Sanity Test (#53)

Refer to the repair procedure described in the “XXX-BD (Common Port Circuit Pack)” Maintenance documentation as SAKI Sanity Test (#53).

LANBIC Receive Parity Error Counter Test (#595)

This test is destructive.

The test reads and clears the LANBIC Receive Parity Error Counter on the circuit pack. This counter is incremented by the circuit pack when it detects a parity error in data received from the Packet Bus.

These errors may be indicative of a circuit pack problem, Packet Bus problem, or a problem with another circuit pack on the bus. This test is useful for verifying the repair of the problem.

Table 10-107. TEST #595 LANBIC Receive Parity Error Counter Test

Error Code	Test Result	Description/Recommendation
2000	ABORT	Response to the test was not received from the circuit pack within the allowable time period. 1. If the test aborts repeatedly a maximum of five times, reset the circuit pack via the **busyout board PCSS** and **reset board PCSS** commands. 2. If the test aborts again, replace the circuit pack.
2100	ABORT	Could not allocate the necessary system resources to run this test.
2012	ABORT	Internal System Error 1. Retry the command at 1-minute intervals a maximum of 5 times.
1-10	FAIL	The circuit pack is still detecting errors of this type. The error code indicates the value of the on-board error counter. 1. Retry the command at 1-minute intervals a maximum of 5 times. 2. If the test continues to fail, verify the validity of the Packet Bus. Run the Packet Bus maintenance test with the **test pkt P long** command. If any Packet Bus tests fail, refer to the “PKT-BUS (Packet Bus)” Maintenance documentation for recommended repair procedures. 3. If the Packet Bus test passes, check the validity of the circuit pack. Execute a test that involves data transmission onto the Packet Bus. For example, the BRI may use the connectivity tests of the port-level maintenance object (BRI-PORT) by executing the **test port PCSSpp** command. Refer to the repair procedures for the executed test if it fails. Otherwise, proceed to the next step. 4. Other circuit packs on the Packet Bus may be the cause of the parity error. Use the **display errors** command to check the Error Log for other circuit packs that are alarmed. If any alarms are present for the other circuit packs, retire those alarms also. Then, rerun the LANBIC Receive Parity Error Counter Test (#595) on this circuit pack.
	PASS	No errors detected by circuit pack.

BRI-DAT (ISDN-BRI)

MO Name (in Alarm Log)	Alarm Level	Initial Command to Run	Full Name of MO
BRI-DAT	WARNING[1]	test data-module	ISDN-BRI Standalone Data Module

1 The alarm level for ASAI adjuncts may be administered using the **set options** command. The alarm level can be set independently for Off-Board and On-Board alarms to WARNING, MINOR, or MAJOR for all ASAI adjuncts in the system.

Refer to BRI-SET (ISDN-BRI Set) Maintenance documentation.

BRI-PORT (ISDN-BRI Port), ABRI-PORT (ASAI ISDN-BRI Port)

MO Name (in Alarm Log)	Alarm Level	Initial Command to Run[1]	Full Name of MO
BRI-PORT	MINOR	test port PCSSpp l	ISDN-BRI Port
BRI-PORT	WARNING	test port PCSSpp sh	ISDN-BRI Port
ABRI-PORT	MAJOR[2,3]	test port PCSSpp l	ASAI ISDN-BRI Port
ABRI-PORT	WARNING[2,3]	test port PCSSpp l	ASAI ISDN-BRI Port
ATT-PORT	MAJOR[2, 3]	test port PCSSpp l	Avaya Adjunct ISDN-BRI Port
ATT-PORT	WARNING[2, 3]	test port PCSSpp l	Avaya Adjunct ISDN-BRI Port
LGATE-PORT	MAJOR[2, 3]	test port PCSSpp l	Ethernet ASAI Port
LGATE-PORT	WARNING[2, 3]	test port PCSSpp l	Ethernet ASAI Port
ATTE-PT	MAJOR[2, 3]	test port PCSSpp l	Ethernet Avaya Adjunct Port
ATTE-PT	WARNING[2, 3]	test port PCSSpp l	Ethernet Avaya Adjunct Port

1 Where P is the port network number (1 for PPN and 2 or 3 for EPN); C is the carrier designation (A, B, C, D, or E); and SS is the address of the slot in the carrier where the circuit pack is located (01, 02, etc.); and pp is the 2-digit port number (for example, 01).

2 The alarm level for ASAI and Avaya adjunct ports may be administered using the **set options** command. The alarm level can be set independently for Off-Board and On-Board alarms to WARNING, MINOR, or MAJOR for all ASAI and Avaya adjunct ports in the system.

3 All alarming for an ASAI and Avaya adjunct and OFF-BOARD alarming for an ASAI or Avaya port is disabled if the ASAI or Avaya adjunct asks the switch to suspend maintenance. When this occurs, an error and a WARNING alarm is logged against the ASAI or Avaya adjunct. The Hardware Error and Alarm Logs should be checked to see if the adjunct has disabled alarming.

NOTE:
Some of the information in this section is reserved for future use.

CAUTION:
A detailed flowchart for isolating and resolving Packet Bus faults is included in Chapter 9, “Packet Bus Fault Isolation and Correction”. This flowchart, along with the other information presented in the chapter, can help in resolving problems that involve more than a single station or circuit pack. Whenever the repair procedures for this Maintenance Object refer to Packet Bus and/or Packet Control maintenance, be sure to reference Chapter 9, “Packet Bus Fault Isolation and Correction” in addition to the relevant MO documentation.

WARNING:
If a significant Packet Bus failure occurs, errors and alarms may not be logged as expected for BRI-PORT/ABRI-PORT/ATT-PORT/LGATE-PT/ATTE-PT. Conditions under which this occurs are detailed in the "Maintenance of the Packet Bus" section of Chapter 9, "Packet Bus Fault Isolation and Correction".

The TN2208 LGATE MFB provides DEFINITY with the interface to Adjunct-Switch Application Interface (ASAI) and Avaya adjuncts (for example, CONVERSANT®. Voice System). The circuit pack contains 12 ports of line circuit interface (although only 8 are usable by the switch), each of which operates with two B-channels (referred to as B1 and B2 throughout this section) and one D-channel as specified in the Avaya ISDN-BRI Specification. In this context, the term "ISDN-BRI port" is used to refer collectively to ports on the TN2208 circuit pack which are connected to ASAI or Avaya adjuncts.

The TN556 and TN2198 ISDN-BRI Line circuit packs provide DEFINITY with the interface to ISDN-BRI end points, Adjunct-Switch Application Interface (ASAI) and Avaya adjuncts (for example, CONVERSANT®. Voice System). The circuit packs contain 12 ports of line circuit interface, each of which operates with two B-channels (referred to as B1 and B2 throughout this section) and one D-channel as specified in the Avaya ISDN-BRI Specification. In this context, the term "ISDN-BRI port" is used to refer collectively to ports on the TN556 an TN2198 circuit packs which are connected to either BRI endpoints or ASAI or Avaya adjuncts.

For BRI endpoints, each B-channel may support voice or circuit-switched data and may be circuit-switched simultaneously. The B-channels are not used on ports connected to ASAI or Avaya adjuncts. The D-channel is used for conveying signaling between the switch and a BRI endpoint(s) or ASAI or Avaya adjunct. Each ISDN-BRI D-channel is connected to the switch processor and the ISDN-BRI port through the Packet Control circuit pack and the Packet Bus.

ISDN-BRI endpoints are available in various configurations. All endpoints require the D-channel to convey signaling information to the switch. Only one B-channel is required for a voice-only set or a stand-alone data module (BRI-DAT). A voice and data-capable set requires both B-channels (one for voice and one for data). Therefore, each TN556 or TN2198 port can support either two voice-only sets, two stand-alone data modules (BRI-DAT), or one voice and data-capable set. Only a single ASAI or Avaya adjunct may be connected to an ISDN-BRI port. Multiple adjuncts per line are not supported.

Figure 10-6 illustrates the physical connection (solid line) between an ISDN-BRI Port and its associated ISDN-BRI set(s). Each physical connection allows for two B-channels and one D-channel. Each ISDN-BRI circuit pack can support up to 12 of these *physical* connections to different voice and voice/data sets or ASAI or Avaya adjuncts. On a TN2198 each ISDN-BRI circuit pack can support up to 12 *physical* connections to a NT1, which, in turn, connects to 2 terminals.

This section covers the maintenance documentation for ISDN-BRI ports. Some of the results of maintenance testing of ISDN-BRI ports may be affected by the health of the ISDN-BRI Line circuit pack (BRI-BD), BRI endpoint (BRI-SET), or ASAI adjunct (ASAI-AJ/LGATE-AJ) or Avaya adjunct (ATT_AJ/ATTE-AJ). These interactions should be kept in mind when investigating the cause of ISDN-BRI port problems. For more information on the circuit pack and endpoints, refer to the BRI-BD (ISDN-BRI Line Circuit Pack) Maintenance documentation, the BRI-SET (ISDN-BRI Endpoint) Maintenance documentation, and ASAI-AJ (Adjunct-Switch Application Interface) Maintenance documentation, ATT-AJ (Avaya Adjunct) Maintenance documentation, LGATE-AJ (Ethernet Adjunct-Switch Application Interface) Maintenance documentation, and ATTE-AJ (Ethernet Avaya Adjunct) Maintenance documentation.

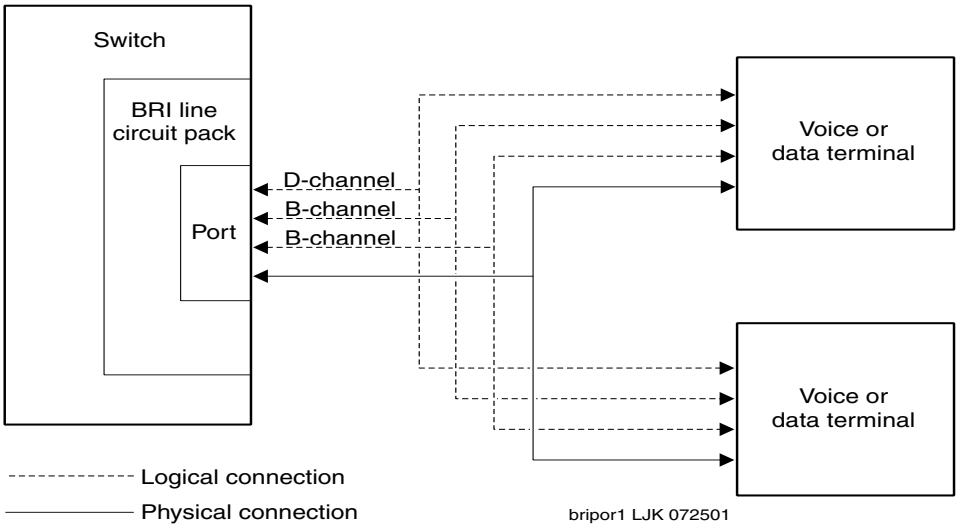

Figure 10-6. ISDN-BRI Port Interactions

Hardware Error Log Entries and Test to Clear Values

Table 10-108. ISDN-BRI Port Error Log Entries

Error Type	Aux Data	Associated Test	Alarm Level BRI-PORT	Alarm Level ABRI-PORT ATT-PORT LGATE-POR T ATTE-PT	On/ Off Board	Test to Clear Value
0[1]	0	Any	Any	Any	Any	test port PCSSpp sh r 1
1 (a)	(a)	Level 1 Status Inquiry (#621)	WRN	MAJ/MIN/ WRN[2]	OFF	test port PCSSpp sh r 2
18		busyout port PCSSpp	WRN		OFF	release port PCSSpp
130 (b)			WRN		ON	test port PCSS sh
257 (c)	(c)	EPF Inquiry (#622)	WRN	MAJ/MIN/ WRN[2]	OFF	test port PCSSpp sh r 1
513 (d)	(d)	none	(d)	(d)	ON	
769 (e)	0	none	WRN	MAJ	OFF	
1281 (f)		NPE Crosstalk (#617)	MIN/ WRN[2]		ON	test port PCSSpp l r 2
1537 (g)	46210	CRC Error Counter (#623)	WRN	MAJ/MIN/ WRN[2]	OFF	
1793 (h)		BRI Port Local TDM	MIN/ WRN[2]		ON	test port PCSSpp l r 2
		Loop Around (#619)				
3841 (i)	46208	None				
3842 (j)	0	None				
3843 (k)	0	None				
3844 (l)	46223	None				

Continued on next page

Table 10-108. ISDN-BRI Port Error Log Entries — *Continued*

Error Type	Aux Data	Associated Test	Alarm Level BRI-PORT	Alarm Level ABRI-PORT ATT-PORT LGATE-PORT ATTE-PT	On/ Off Board	Test to Clear Value
3845 (m)		None				
3846 (n)	TEI	None				
3847 (o)	0	None				

1 Run the Short Test Sequence first. If all tests pass, run the Long Test Sequence. Refer to the appropriate test description, and follow the recommended procedures.

2 Major and Minor alarms on this MO may be downgraded to Warning alarms based on the value used in the **set options** command.

Notes:

a. This error occurs when the Level 1 Status Inquiry fails or when the BRI circuit pack detects that Level 1 has been deactivated on the port. The aux data field contains one of the following values:

- blank - this indicates that the Level 1 Status Inquiry failed.
- 32773 - this is a message from the BRI-LINE circuit pack indicating Level 1 has been deactivated.

Refer to the repair procedures for Test #621.

b. This error type indicates that the circuit pack has been removed or has been insane for more than 11 minutes. To clear the error, replace or reinsert the circuit pack.

c. This error occurs when the EPF Status Inquiry fails due to an overcurrent condition or when the BRI-LINE circuit pack detects that the EPF is in an over current condition. The aux data field contains one of the following values:

- blank - this indicates that the EPF Status Inquiry failed due to an overcurrent condition.
- 40988 - this indicates that the BRI-LINE circuit pack has detected an overcurrent condition and has turned the EPF off.

Execute the Short Test Sequence and see the repair procedures for Test #622.

d. This error indicates that the circuit pack is having problems transmitting data to the Packet Bus, thus affecting the conveyance of signaling information over the D-channel. With Aux Data 46222, this error occurs when the Packet Bus transmit buffers overflow. This condition probably indicates a hardware problem. The BRI-PORT Alarm Level for the error with Aux Data 46222 is “MIN/WRN,” and the ABRI-PORT/ATT-PORT/LGATE-PT/ATTE-PT Alarm Level is “MAJ/MIN/WNR.” With Aux Data 0, this error occurs whenever the Packet Bus transmit FIFO buffers overflow. This condition can be caused by an on-board hardware problem as well as by problems on the Packet Bus that disrupt the BRI circuit pack’s ability to transmit data onto the Packet Bus. Use troubleshooting procedures for both on-board hardware problems and potential off-board Packet Bus problems. See the “PKT-BUS (Packet Bus)” Maintenance section in this chapter as well as Chapter 9, “Packet Bus Fault Isolation and Correction” for more details on Packet Bus troubleshooting procedures. The BRI-PORT Alarm Level for the error with Aux Data 0 is “MINOR,” and the ABRI-PORT/ATT-PORT/LGATE-PT/ATTE-PT Alarm Level is “MAJOR.”

e. This error occurs when the NPE Crosstalk Test (#617) fails. Run the Long Test Sequence, and pay particular attention to the results of Test #617.

f. This error occurs when broadcast signaling links associated with this port have too much link establishment related traffic. This could occur if an endpoint on this port is sending link establishment traffic on a port level broadcast link, or if there are Level 1 problems on the port. Check the error logs for Level 1 errors. If Level 1 problems exist, follow the repair procedures listed for test #621. Software will suspend activity to this port for 75 minutes when the port is alarmed due to this error (note that service suspension does not occur if the port is an ABRI-PORT/LGATE-PT/ATTE-PT/ATT-PORT). If this problem persists, replace the endpoint or endpoints associated with this port. If replacing the endpoints does not fix the problem, follow normal escalation procedures.

g. This error occurs when the port receives an invalid frame over the D-channel. When CRC errors exceed five within 15 minutes, the port is taken out of service for five seconds. If five more CRC errors are received within 15 minutes of the first set of five errors, the port is taken out of service for one minute. If five more CRC errors are received within 15 minutes of the last five, the port is taken out of service for 15 minutes.

   This error is most likely due to a problem with the wiring to the set or adjunct, interference on the wiring due to a noise source or no termination (an open circuit). It usually does not indicate a problem with the circuit pack.

   - Check the wiring to the endpoints or the adjunct.
   - If the problem persists, replace the endpoints or adjuncts, or escalate the problem.

h. This error occurs when the BRI Port Local TDM Loop Around Test (#619) fails. Run the Long Test Sequence, and pay particular attention to the results of Test #619.

There are no Test to Clear Values for the following error types. The error types are simply provided as additional data that may prove useful while troubleshooting.

i. This error occurs when a Layer 1 Transmission error is detected for the port. Run the Long Test Sequence, and pay particular attention to the results of the Layer 1 Transmission Error Counter Test (#624).

j. A BRI port supports up to three Terminal Endpoint Identifiers (Ties). This error occurs when the switch receives a request for a fourth TEI on a port. Check the number of endpoints administered for this port.

k. This error occurs when an SPID initialization request is made from an endpoint and the switch determines that the SPID value is invalid or is a duplicate of another SPID that is already initialized at Layer 3 on the port. Check the administration of the endpoints.

l. This error occurs when the circuit pack detects an overflow of its receive buffers. Run the Long Test Sequence, and pay particular attention to the results of the Receive First In First Out (FIFO) Overflow Error Counter Test (#625).

m. This error occurs when the BRI Port Local LAN Loop Around Test (#618) fails. Run the Long Test Sequence, and pay particular attention to the results of Test #618.

n. This error most likely occurs when the Terminal Endpoint Identifier (TEI) administered for the ASAI or Avaya endpoint does not match the TEI administered in the ASAI or Avaya adjunct. Check the switch administration of the TEI against that of the adjunct, and make sure that both are using the same TEI.

o. Indicates that sets on the port do not support Layer 3 initialization. Consult the Service Set documentation.

System Technician-Demanded Tests: Descriptions and Error Codes

Always investigate tests in the order presented in the following tables when inspecting errors in the system. By clearing error codes associated with the *NPE Crosstalk Test*, for example, you may also clear errors generated from other tests in the testing sequence.

Order of Investigation	Short Test Sequence	Long Test Sequence	D/ND[1]
NPE Crosstalk Test (#617)		X	D
BRI Port Local LAN Loop Around Test (#618)		X	D
BRI Port Local TDM Loop Around Test (#619)		X	D
Electronic Power Feed Restoral Test (#620)	X	X	ND
Level 1 Status Inquiry Test (#621)	X	X	ND
Electronic Power Feed Inquiry Test (#622)	X	X	ND
CRC Error Counter Test (#623)		X	ND
Layer 1 Transmission Error Counter Test (#624)		X	ND
Receive FIFO Overflow Error Counter Test (#625)		X	ND
Clear Error Counters (#270)	X	X	ND

1 D = Destructive; ND = Nondestructive

NOTE:
The NPE Crosstalk Test and the BRI Port Local TDM Loop Around Test are not executed for ABRI-PORT/ATT-PORT/LGATE-PT/ATTE-PT.

NPE Crosstalk Test (#617)

This test is destructive.

One or more NPEs reside on each circuit pack with a TDM Bus interface. The NPE controls port connectivity and gain and provides conferencing functions on a per-port basis. The NPE Crosstalk Test verifies that this port's NPE channel talks on the selected time slot and never crosses over to time slots reserved for other connections. If the NPE is not working correctly, one-way and noisy connections may be observed. This test is part of a port's Long Test Sequence and takes approximately 20 to 30 seconds to complete. Crosstalk testing is performed on both B-channels (B1 and B2) associated with a BRI port. If this test fails on either channel, any endpoints connected to the port are taken out-of-service.

This test is not executed for ABRI-PORT/ATT-PORT/LGATE-PT/ATTE-PT because the B-channels associated with the port are not used by ASAI or Avaya adjuncts.

Table 10-109. TEST #617 Loop Around Test

Error Code	Test Result	Description/Recommendation
1000	ABORT	System resources required to run this test are not available. The port may be busy with a valid call. Use the **display port PCSSpp** command to determine the station extension or trunk group/member number of the port. Use the **status bri-port PCSSpp** command to determine the service state of the port. If the service state indicates that the port is in use, then the port is unavailable for certain tests. Wait until the port is idle before retesting. 1. If the port status is idle, then retry the command at 1-minute intervals a maximum of 5 times.
1004	ABORT	The port has been seized by a user for a valid call. Use the **status station** command for the station associated with this port and determine when the port is available for testing. 1. Retry the command at 1-minute intervals a maximum of 5 times. 2. If the test continues to abort and the port is not in use, escalate the problem.
1005	ABORT	This test is not valid for this type of translation. Ports administered as “ASAI” or “ADJK” cannot run this test, because the B channels associated with the port are not used by ASAI or Avaya Adjunct Links. This is a normal condition.
2012	ABORT	Internal System Error.
2100	ABORT	Could not allocate the necessary resources to run this test. 1. Retry the command at 1-minute intervals a maximum of 5 times.
1, 2	FAIL	The NPE of the tested port was found to be transmitting in error. This causes noisy and unreliable connections. Error code 1 indicates that the NPE Crosstalk Test failed on Channel B1. Error code 2 indicates that the NPE Crosstalk Test failed on Channel B1. 1. Replace circuit pack.
	PASS	The port is correctly using its allocated time slots. 1. To be sure that this is not an intermittent problem, repeat this test a maximum of 10 times to make sure it continues to pass. 2. If complaints still exist, examine the station, connections, and wiring.

BRI Port Local LAN Loop Around Test (#618)

This test is destructive.

This test, which verifies the connectivity of a BRI port across the LAN Bus, executes only if the port is out-of-service. The test aborts if calls associated with the port are in-progress. Failures of this test indicate either on-board faults associated with the BRI-PORT hardware on the circuit pack or problems with the LAN Bus, which is used to form connectivity between the switch and the BRI-PORT.

The dotted lines in Figure 10-7 show how a Loop Around Test is performed across the Packet Bus for the D-channel.

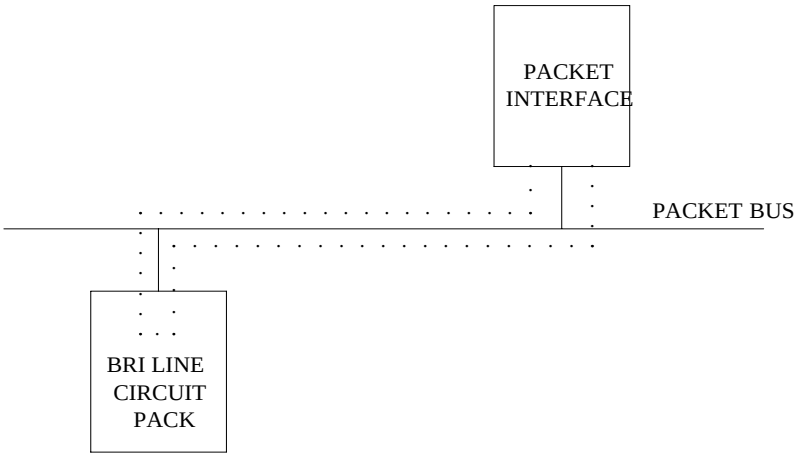

Figure 10-7. Path of the BRI Port Local LAN Loop Around

Table 10-110. TEST #618 BRI Port Local LAN Loop Around

Error Code	Test Result	Description/Recommendation
1015	ABORT	The port is not in the out-of-service service state. 1. Display the BRI Port Status form via the **status bri-port PCSSpp** command to determine which stations or adjuncts are on this port. 2. Use the extension shown on this form in the **status station** command to determine if the station or adjunct is in use. 3. If it is in use, wait until it is idle, and then busyout the port (using the **busyout port PCSSpp** command) to place it in the out-of-service state and repeat this test. **WARNING:** *Since the "busyout" command is destructive, execution of this command prior to the port being idle causes all calls associated with BRI endpoints and all transactions associated with ASAI or Avaya adjuncts on the port to be torn down. Note that third party calls established by an ASAI or Avaya adjunct remain connected even though the port is taken out-of-service.*
1139	ABORT	The Packet Bus in the port network is out-of-service. 1. Follow the repair procedures for the Packet Bus. 2. After completing Step 1, execute the **test port long PCSSpp** command, and review the results of the BRI Port Local LAN Loop Around Test to verify the repair.
1141	ABORT	The PKT-CTRL is out-of-service. 1. Follow the repair procedures for the PKT-CTRL. 2. After completing Step 1, execute the **test port long PCSSpp** command, and review the results of the BRI Port Local LAN Loop Around Test to verify the repair.
1144	ABORT	The PPN Packet Bus is out-of-service. 1. Follow the repair procedures for the Packet Bus. 2. After completing Step 1, execute the **test port long PCSSpp** command, and review the results of the BRI Port Local LAN Loop Around Test to verify the repair.
2012	ABORT	Internal System Error.

Continued on next page

Table 10-110. TEST #618 BRI Port Local LAN Loop Around — *Continued*

Error Code	Test Result	Description/Recommendation
2100	ABORT	Could not allocate the necessary system resources to run this test. 1. Retry the command at 1-minute intervals a maximum of 5 times.
	FAIL	The Loop Around Test has failed. 1. If the test fails repeatedly, attempt to reset the circuit pack if the other ports on the board are not in use. Reset the circuit pack by issuing the **busyout board PCSS** and the **reset board PCSS** commands. 2. If the test fails again, execute **test port-network <*pn#*>** on the G3MT terminal. If this fails, follow failure procedures in PKT-BUS section. 3. If tests executed in Step 2 pass, the problem is local to the BRI board. Replace the circuit pack.
	PASS	The BRI Port Local LAN Loop Around Test has passed.

BRI Port Local TDM Loop Around Test (#619)

This test is destructive.

This test verifies the connectivity of a BRI port across the TDM Bus. It aborts if calls associated with the port are in progress. Failure of this test indicates an on-board fault associated with the port hardware on the circuit pack.

This Loop Around Test runs a series of individual tests on the two B-channels (B1 and B2) associated with the port. It is a collection of the following:

- A Loop Around Test across the TDM Bus for B1.
- A Conference Circuit Test for B1.
- A Loop Around Test across the TDM Bus for B2.
- A Conference Circuit Test for B2.

The tests are run in the above order. If one fails, the remaining tests in the sequence are not executed. An error code is returned at that point.

This test is not executed for ABRI-PORT/ATT-PORT/LGATE-PT/ATTE-PT because the B-channels associated with the port are not used by ASAI or Avaya adjuncts.

The dotted lines in Figure 10-8 show how a Loop Around Test is performed for the B-channels. The figure shows a terminal connected to a BRI line board using a TN556. If a TN2198 is used, the terminal would be connected to a NT1, and the NT1 to the BRI board.

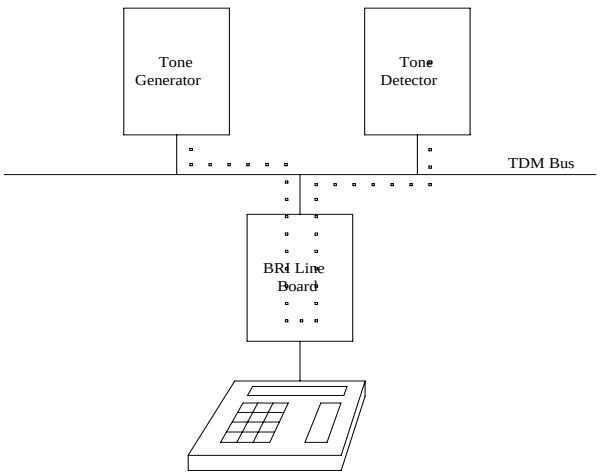

Figure 10-8. Path of the BRI Port Local TDM Loop Around

Table 10-111. TEST #619 BRI Port Local TDM Loop Around

Error Code	Test Result	Description/Recommendation
1000	ABORT	The system resources required to run this test are not available. The port may be busy with a valid call. Use the **display port PCSSpp** command to determine the station extension or trunk group/member number of the port. Use the **status bri-port PCSSpp** command to determine the service state of the port. If the service state indicates that the port is in use, then the port is unavailable for certain tests. Wait until the port is idle before retesting. 1. If the port is idle, then retry the command at 1-minute intervals a maximum of 5 times.
1002	ABORT	The system could not allocate time slots for the test. The system may be under heavy traffic conditions or it may have time slots out-of-service due to TDM-BUS errors. Refer to TDM-BUS (TDM Bus) Maintenance documentation to diagnose any active TDM Bus errors. 1. If the system has no TDM-BUS errors and is not handling heavy traffic, repeat test at 1-minute intervals a maximum of 5 times.
1003	ABORT	The system could not allocate a tone receiver for the test. The system may be oversized for the number of Tone Detectors present or some Tone Detectors may be out-of-service. 1. Look for TTR-LEV errors in the Error Log. If present, refer to TTR-LEV (TTR Level) Maintenance documentation. 2. Look for TONE-PT errors in the Error Log. If present, refer to TONE-PT (Tone Generator) Maintenance documentation. 3. If neither condition exists, retry the test at 1-minute intervals a maximum of 5 times.
1004	ABORT	The port has been seized by a user for a valid call. Use the **status station** command for the station associated with this port and determine when the port is available for testing. 1. Retry the command at 1-minute intervals a maximum of 5 times. 2. If the test continues to abort and the port is not in use, escalate the problem.
1005	ABORT	This test is not valid for this type of translation. Ports administered as “ASAI” or “ADJK” can not run this test, because the B channels associated with the port are not used by ASAI or Avaya Adjunct Links. This is a normal condition.

Continued on next page

Table 10-111. TEST #619 BRI Port Local TDM Loop Around — *Continued*

Error Code	Test Result	Description/Recommendation
2000	ABORT	Response to the test was not received from the BRI-LINE circuit pack within the allowable time period. 1. If this result occurs repeatedly, attempt to reset the circuit pack if the other ports are not in use. Reset the circuit pack by issuing the **busyout board PCSS** and the **reset board PCSS** commands. 2. If this result occurs again, replace the circuit pack.
2012	ABORT	Internal System Error.
2100	ABORT	Could not allocate the necessary resources to run this test. 1. Retry the command at 1-minute intervals a maximum of 5 times.
2103	ABORT	The system could not make the conference connection for the test. 1. Retry the command at 1-minute intervals a maximum of 5 times.
1, 2	FAIL	As stated previously, this test runs a TDM Loop Around Test on each B-channel. This indicates that the loop around failed on one of the channels. Error Code 1 indicates that the TDM Loop Around Test failed on B1. Error Code 2 indicates that the TDM Loop Around Test failed on B2.
7, 8	FAIL	As stated previously, this test runs a Conference Circuit Test on each B-channel. A failure here indicates that one of these conference tests failed; Error Code 7 means that the test failed on B1; Error Code 8 means that the test failed on B2. 1. If the test fails repeatedly, attempt to reset the circuit pack if the other ports on the circuit pack are not in use. Reset the circuit pack by issuing the **busyout board PCSS** and the **reset board PCSS** commands. 2. If the test fails again, replace the circuit pack.
	PASS	The BRI Port Local TDM Loop Around Test has passed.

Electronic Power Feed Restoral Test (#620)

This test attempts to restore the Electronic Power Feed (EPF) on an ISDN-BRI port twice. In this test, the processor requests that the EPF be turned on for a given port. An attempt is made to turn on the power unit to the station or adjunct. If no current is being drawn by a station, this probably indicates that the station is not connected. No current being drawn by an adjunct is the normal condition. If an overcurrent condition is sensed (that is, too much current is being drawn), this condition may indicate a short in the wiring to the endpoint or adjunct. Depending on what condition is sensed, a message is returned stating that either the EPF was turned on successfully with no problems or that an overcurrent condition is sensed. This response is reported by the Electronic Power Feed Inquiry (#622), which follows in the testing sequence. EPF Restoral is attempted again by this test five seconds later. This test always passes for the TN2198 because it has no EPF. This test will always abort when run on the TN2208.

Table 10-112. TEST #620 Electronic Power Feed Restoral

Error Code	Test Result	Description / Recommendation
1005	ABORT	This test is not valid for this port type. The TN2208 does not have an electronic power feed, and the test will abort.
2012	ABORT	Internal System Error 1. Retry the command at 1-minute intervals a maximum of 5 times.
	PASS	The EPF Test passed. The message to turn on the power feed to the station or the adjunct was successfully sent to the port. 1. Although this test should not return a fail result, after running this test, the Error Log should be checked for any entries with error type 257 to examine the real results of this test. 2. An error type of 257 in the Error Log indicates some problem with the power to the station or the adjunct. Check for a short in the wiring, a damaged jack, a defective voice terminal or adjunct, or an incorrect type of terminal.

Level 1 Status Inquiry Test (#621)

This test determines the state of the transmission facility of a BRI port at the physical layer (that is, Level 1). Level 1 can be in one of three possible states: Activated, Pending Activation, or Deactivated.

The Activated state is the correct state for an ISDN-BRI port. In this state the Level 1 interface can communicate with the BRI endpoint or ASAI or Avaya adjunct administered on this port. This test passes if the state of Level 1 (L1) is Activated. This test also passes if software has taken this port out of service. See the description of the Level 1 “Deactivated State” below for more details.

The Pending Activation state indicates a problem with the endpoints or adjunct, the wiring to the sets or adjunct, or the BRI-LINE circuit pack. When in this state, the Level 1 interface is either not receiving any L1 framing from the endpoint or adjunct (Endpoint Idle), or it is communicating with the endpoint or adjunct but cannot transition to the Activated state (Endpoint Active).

The Deactivated state indicates a problem with the BRI-LINE circuit pack. When in this state, the Level 1 interface is idle and is not trying to communicate with the BRI endpoints or adjunct. When an ISDN-BRI port is placed in the out-of-service state, Level 1 is also put into the Deactivated state. This could be due either to the system detecting a fault with the port or to a **busyout port PCSSpp** request.

Table 10-113. TEST #621 Level 1 Status Inquiry

Error Code	Test Result	Description/Recommendation
1187	ABORT	The board, port or station may have been busied out by a technician. 1. Look in the Error Log for Error Type 18 (port busied out) for this port and BRI-BD (board busied out). If this error type is present for BRI-PORT only, then release the port via the **release port pp** command and run the test again. If the error is present for both BRI-BD and BRI-PORT, then release the board via the **release port PCSS** command and run the test again. **NOTE:** When you release a port, you release all ports associated with it. If certain ports still need to be busied out, use the **release port PCSSpp** command to busy them out. 2. Make sure the terminal is connected. 3. Retry the command at 1-minute intervals a maximum of 5 times.
2000	ABORT	Response to the test was not received from the circuit pack within the allowable time period. 1. If the test aborts repeatedly a maximum of five times, reset the circuit pack via the **busyout board PCSS** and **reset board PCSS** commands. 2. If the test aborts again, replace the circuit pack.

Continued on next page

Table 10-113. TEST #621 Level 1 Status Inquiry — *Continued*

Error Code	Test Result	Description/Recommendation
2012	ABORT	Internal System Error.
2100	ABORT	Could not allocate the necessary system resources to run this test. 1. Retry the command at 1-minute intervals a maximum of 5 times.
1	FAIL	Received a status of Level 1 Pending Activation-Endpoint Idle which indicates a problem with the BRI endpoint or ASAI or Avaya adjunct, the wiring to the endpoint or adjunct, or the ISDN-BRI port. For the TN2198, received a status of Level 1 Pending Activation. U interface down, which indicates a problem with a connection between the switch and the NT1. **NOTE:** An NT1 is a 2- to 4-wire converter that is used to connect 4-wire Avaya terminals to a 2-wire TN2198 circuit pack. The NT1 also has status lamps to determine the health of the unit. 1. For the TN556 or TN2208, verify that an endpoint is connected to the port. If an endpoint is connected to the port, then proceed to step 2. For the TN2198 verify that the connections are good between the switch and the NT1. Verify that the NT1 has power. 2. As necessary, check and repair the wiring between the circuit pack and the endpoint or adjunct. If a TN2198 is used, the set must have been plugged in for at least 15 seconds before it will stabilize. Execute the **test port PCSSpp** command, and review the results of the Level 1 Status Inquiry Test to verify the repair. If this test is still failing, proceed to Step 3. 3. For BRI endpoints, replace the BRI endpoint(s) connected to the port or the NT1 if a TN2198 is used. For ASAI or Avaya adjuncts, follow the recommended repair procedures of the manufacturer for link communication problems. For the NT1, follow the manufacturers repair procedures. Then execute the **test port PCSSpp** command and review the results of the Level 1 Status Inquiry Test to verify repair. If this test is still failing, proceed to Step 4. 4. Escalate the problem to the next tier.

Continued on next page

Table 10-113. TEST #621 Level 1 Status Inquiry — *Continued*

Error Code	Test Result	Description/Recommendation
2	FAIL	For the TN556 or TN2208, received a status of Level 1 Pending Activation-Endpoint Active which indicates a problem with the BRI endpoint or ASAI or Avaya adjunct, the wiring to the endpoint or adjunct, or the ISDN-BRI port. For the TN2198, received a status of Level 1 Pending Activation. U interface up S/T interface down, which indicates a problem with the NT1 or the wiring between the NT1 and the BRI endpoint (S/T interface). 1. As necessary, check and repair the wiring between the circuit pack and the endpoint or adjunct. Execute the **test port PCSSpp** command, and review the results of the Level 1 Status Inquiry test to verify the repair. If this test is still failing, proceed to Step 2. 2. For BRI endpoints, try replacing the BRI endpoint(s) connected to the port. For ASAI or Avaya adjuncts, follow the recommended repair procedures of the manufacturer for link communication problems. For the NT1, follow the recommended repair procedures of the manufacturer. Then execute the **test port PCSSpp** command, and review the results of the Level 1 Status Inquiry test to verify repair. If this test is still failing, proceed to Step 3. 3. Escalate the problem to the next tier.

Continued on next page

Table 10-113. TEST #621 Level 1 Status Inquiry — *Continued*

Error Code	Test Result	Description/Recommendation
3	FAIL	Received a status of Level 1 Deactivated; the port is out-of-service. 1. Issue the **status bri-port PCSSpp** command to verify that the service state of the port is out-of-service. If the service state of the port is not out-of-service, escalate the problem to the next tier. Otherwise, proceed to Step 2. 2. If the port has been placed out-of-service via the **busyout port PCSSpp** command, try releasing the port by executing the **release port PCSSpp** command. Then issue the **test port long PCSSpp** command, and review the results of Level 1 Status Inquiry test. If this test is still failing, proceed to Step 3. 3. After executing the **test port long PCSSpp** command, review the results of all the tests. Follow the repair procedures for any tests that fail. Verify repair of the problem by executing the **test port PCSSpp** command and by determining that the Level 1 Status test passes. If the test continues to fail for this reason, proceed to Step 4. 4. Escalate the problem to the next tier.
4	FAIL	For the TN2198 only: Received a status of Level 1 Pending Activation, the NT1 has a loss of power indicating a problem with the NT1. 1. For the NT1 follow the manufacturers recommended repair procedures. 2. Execute the **test port PCSSpp** command, and review the results of the Level 1 Status Inquiry test to verify the repair. If the test is still failing proceed to Step 3. 3. Escalate the problem to the next tier.
	PASS	This test indicates that Level 1 is activated, or that software has taken the port out of service.

Electronic Power Feed Inquiry (#622)

This test queries the BRI-LINE circuit pack for the status of the Electronic Power Feed (EPF) supplied to a BRI endpoint or an ASAI or Avaya adjunct. If the EPF is on and no overcurrent condition exists, this test passes. All other states are not normal and indicate a problem with the endpoint or adjunct, the wiring to the endpoint or adjunct, or the BRI-LINE circuit pack. This test is not run on the TN2208 circuit pack or the TN2198 and will always return a pass for a TN2198. The TN2208 has no power feeds.

Table 10-114. TEST #622 Electronic Power Feed Inquiry

Error Code	Test Result	Description/Recommendation
1005	ABORT	This test is not valid for this port type. Ports on the TN2208 cannot run this test because this board does not have an electronic power feed.
2000	ABORT	Response to the test was not received from the circuit pack within the allowable time period. 1. If the test aborts repeatedly a maximum of five times, reset the circuit pack via the **busyout board PCSS** and **reset board PCSS** commands. 2. If the test aborts again, replace the circuit pack.
2012	ABORT	Internal System Error.
2100	ABORT	Could not allocate the necessary system resources to run this test. 1. Retry the command at 1-minute intervals a maximum of 5 times.
1	FAIL	The BRI-LINE circuit pack reports that it has detected an overcurrent condition and has turned off the EPF. 1. As necessary, check and repair the wiring between the circuit pack and the endpoint or adjunct. Check the endpoints and replace one or both sets if the sets are drawing too much current. Execute the **test port PCSSpp** command and review the results of the EPF Inquiry Test to verify the repair. If this test is still failing, proceed to Step 2. 2. Execute the **test port PCSSpp** command, and review the results of the Level 1 Status Inquiry Test. If this test is also failing, then follow the repair procedure for the Level 1 Status Inquiry Test. Otherwise, escalate this problem to the next tier.

Continued on next page

Table 10-114. TEST #622 Electronic Power Feed Inquiry — *Continued*

Error Code	Test Result	Description/Recommendation
	PASS	The Electronic Power Feed Inquiry Test reports that the EPF is on.
2000	ABORT	Response to the test was not received from the circuit pack within the allowable time period. 1. If the test aborts repeatedly a maximum of five times, reset the circuit pack via the **busyout board PCSS** and **reset board PCSS** commands. 2. If the test aborts again, replace the circuit pack.
2012	ABORT	Internal System Error.

Layer 1 Transmission Error Counter Test (#624)

This test reads and clears the BRI port's Layer 1 Transmission error counter maintained on the BRI-LINE circuit pack. This counter is incremented by the circuit pack when it detects a Layer 1 transmission problem. The test passes if the value of the counter is 0 (that is, the error is cleared). If the counter is not zero, the test fails, and the value of the counter is displayed in the Error Code field.

This error is most likely due to a problem with the wiring or the endpoint or adjunct (verify that the wiring meets the configuration rules defined in *DEFINITY Communications System Generic 1 and Generic 3i Wiring*, 555-204-111). It does not indicate a problem with the ISDN-BRI circuit pack. This test is useful for verifying the repair of the problem.

Table 10-115. TEST #624 Layer 1 Transmission Error Counter Test

Error Code	Test Result	Description/Recommendation
2000	ABORT	Response to the test was not received from the circuit pack within the allowable time period. 1. If the test aborts repeatedly a maximum of five times, reset the circuit pack via the **busyout board PCSS** and **reset board PCSS** commands. 2. If the test aborts again, replace the circuit pack.
2012	ABORT	Internal System Error.
2100	ABORT	Could not allocate necessary system resources to run test. 1. Retry the command at 1-minute intervals a maximum of 5 times.
value	FAIL	The BRI-LINE circuit pack is still detecting errors of this type. The Error Code field contains the value of this counter. 1. Retry the command at 1-minute intervals a maximum of 5 times. 2. If the test continues to fail, review the results of other tests in the Long Test Sequence. Pay particular attention to the results of the Level 1 Status Inquiry test. Follow repair procedures for any of the executed tests if they fail. Otherwise, go to the next step. 3. If the tests for the endpoints or adjunct pass and the Layer 1 Transmission Error Counter Test continues to fail, check the wiring to the endpoints or adjunct. If the wiring appears to be fine, escalate the problem.
	PASS	The Layer 1 Transmission error counter was read correctly and has a value of 0.

Receive FIFO Overflow Error Counter Test (#625)

This test reads and clears the BRI port's Receive FIFO Overflow error counter maintained on the BRI-LINE circuit pack. This counter is incremented by the circuit pack when it detects an overflow of its receive buffers. The test passes if the value of the counter is 0 (that is, the error is cleared). If the counter is non-zero, the test fails, and the value of the counter is displayed in the Error Code field.

This error can occur if signaling frames are being received from the Packet Bus at a rate sufficient to overflow the receive buffers on the circuit pack for a port OR if a hardware fault is causing the receive buffers not to be emptied properly by the circuit pack. This test is useful for verifying the repair of the problem.

Table 10-116. TEST #625 Receive FIFO Overflow Error Counter Test

Error Code	Test Result	Description/Recommendation
2000	ABORT	Response to the test was not received from the circuit pack within the allowable time period. 1. If the test aborts repeatedly a maximum of five times, reset the circuit pack via the **busyout board PCSS** and **reset board PCSS** commands. 2. If the test aborts again, replace the circuit pack.
2012	ABORT	Internal System Error.
2100	ABORT	Could not allocate the necessary system resources to run this test. 1. Retry the command at 1-minute intervals a maximum of 5 times.
value	FAIL	The BRI-LINE circuit pack is still detecting errors of this type. The Error Code field contains the value of this counter. 1. Retry the command at 1-minute intervals a maximum of 5 times. 2. If the test continues to fail, run the Long Test Sequence and pay particular attention to the Loop Around Tests (#618 and #619). See the repair procedures for the executed test if it fails. Otherwise, go to the next step. 3. Replace the circuit pack.
	PASS	The Receive FIFO Overflow error counter was read correctly and has a value of 0.

Clear Error Counters Test (#270)

This test is not an actual test in the strict sense of the word. There are various error counters associated with each BRI-PORT/ABRI-PORT/ATT-PORT/LGATE-PT/ATTE-PT. This test clears those counters and triggers the auditing of Terminal Endpoint Identifier (TEI) values and layer 3 reinitialization. This test is used only to send messages to the BRI-PORT/ABRI-PORT/ATT-PORT/LGATE-PT/ATTE-PT and, therefore, should neither abort nor fail.

Table 10-117. TEST #270 Clear Error Counters

Error Code	Test Result	Description/Recommendation
Any	ABORT	This test should never abort.
Any	FAIL	This test should never fail. 1. Retry the command at 1-minute intervals a maximum of 5 times.
	PASS	The message to clear the error counters of the BRI-Port/ABRI-Port/ATT-PORT/LGATE-PT/ATTE-PT has been sent.

BRI-SET, ASAI-ADJ, BRI-DAT

MO Name (in Alarm Log)	Alarm Level	Initial Command to Run[1]	Full Name of MO
BRI-SET	WARNING[2]	test station extension l, test data-module extension	ISDN-BRI Set
ASAI-ADJ	MAJOR[2]	test station extension	ASAI-Adjunct
ASAI-ADJ	MAJOR[2]	test data-module extension	ASAI-Adjunct
ASAI-ADJ	WARNING[3]	test data-module extension	ASAI-Adjunct
ATT-ADJ	MAJOR[2]	test station extension	Avaya-Adjunct
ATT-ADJ	MAJOR[2]	test station extension	Avaya-Adjunct
ATT-ADJ	WARNING[3]	test station extension	Avaya-Adjunct
LGATE-AJ	MAJOR[2]	test station extension	Ethernet ASAI-Adjunct
LGATE-AJ	MAJOR[2]	test station extension	Ethernet ASAI-Adjunct
LGATE-AJ	WARNING[3]	test station extension	Ethernet ASAI-Adjunct
ATTE-AJ	MAJOR[2]	test station extension	Ethernet Avaya-Adjunct
ATTE-AJ	MAJOR[2]	test station extension	Ethernet Avaya-Adjunct
ATTE-AJ	WARNING[3]	test station extension	Ethernet Avaya-Adjunct
BRI-DAT		test data-module	

1 Where P is the port network number (1 for PPN and 2 or 3 for EPN); C is the carrier designation (A, B, C, D, or E); SS is the address of the slot in the carrier where the circuit pack is located (01, 02, etc.); and pp is the 2-digit port number (for example, 01). The alternate name field contains the extension of the endpoint. This field is used to distinguish between endpoints on the same port.

2 The alarm level for ASAI and Avaya adjuncts may be administered using the **set options** command. The alarm level can be set independently for Off-Board and On-Board alarms to WARNING, MINOR, or MAJOR for all ASAI and Avaya adjuncts in the system.

3 Alarming for an ASAI and Avaya adjuncts is disabled if the adjunct asks the switch to suspend maintenance. When this occurs, an error and a WARNING alarm are logged against the endpoint. Busying out and releasing the ASAI station or ADJLK station will clear the alarm.

CAUTION:
A detailed flowchart for isolating and resolving Packet Bus faults is included in Chapter 9, “Packet Bus Fault Isolation and Correction”. This flowchart, along with the other information presented in the chapter, can help in resolving problems that involve more than a single station or circuit pack. Whenever the repair procedures for this Maintenance Object refer to Packet Bus and/or Packet Control maintenance, be sure to reference Chapter 9, “Packet Bus Fault Isolation and Correction” in addition to the relevant MO documentation.

WARNING:
If a significant Packet Bus failure occurs, errors and alarms may not be logged as expected for BRI-SET/BRI-DAT/ASAI-ADJ/ATT-ADJ/ LGATE-AJ/ATTE-AJ. Conditions under which this occurs are detailed in the “”Maintenance of the Packet Bus” section of Chapter 9, “Packet Bus Fault Isolation and Correction”.

The TN2208 ESAI MFB provides DEFINITY with an Ethernet interface to Adjunct-Switch Application Interface (ASAI) and Avaya adjuncts (for example, CONVERSANT® Voice System). This circuit pack contains 8 ports of line circuit interface, each of which operates with two B-channels (referred to as B1 and B2 throughout this section) and one D-channel as specified in the Avaya ISDN-BRI Specification. In this context, the term ‘‘ISDN-BRI port’’ is used to refer collectively to ports on the TN2208 MFB circuit pack which is connected to ASAI or Avaya adjuncts. The TN2208 ESAI MFB is handled by switch software as it is an ISDN BRI compatible board and all maintenance actions referring to ASAI and Avaya Adjunct Links in this section apply.

In G3iV1.1-286 and G3iV2-386, two types of ISDN-BRI endpoints may be connected to ISDN-BRI (ISDN Basic Rate Interface Line) TN556 and TN2198 circuit packs: ISDN-BRI station endpoints, ASAI (Adjunct-Switch Application Interface) and Avaya adjuncts (for example CONVERSANT® Voice System). These circuit packs contain 12 ports of line circuit interfaces, each of which operates at 192 kilobits per second (kbps) with two B-channels and one D-channel as specified in the Avaya ISDN-BRI specification (PUB 801-802-100). For BRI endpoints, each B-channel may support voice or circuit-switched data and may be circuit-switched simultaneously. The B-channels are not used by ASAI or Avaya adjuncts. The D-channel is used for conveying signaling between the switch and a BRI endpoint(s) or ASAI or Avaya adjuncts. Each ISDN-BRI D-channel is connected to the switch processor and the ISDN-BRI port through the PKT-CTRL (Packet Control) and the PKT-BUS (Packet Bus).

ISDN-BRI endpoints come in a number of configurations. All endpoints require the D-channel to convey signaling information to the switch. A voice-only set requires only one B-channel. A voice and data-capable set requires both B-channels (one for voice and one for data). Therefore, each TN556 port can support either two voice-only sets or one voice and data-capable set. Only a single ASAI or Avaya adjunct may be connected to an ISDN-BRI port. Multiple adjuncts per line are not supported.

Figure 10-9 on page 10-294 illustrates the physical connection (solid line) between an ISDN-BRI Circuit Pack and a voice or voice/data set. Each physical connection allows for two B-channels, as stated above, plus one D-channel. Each ISDN-BRI circuit pack can support up to 12 of these PHYSICAL connections to different voice and voice/data sets or ASAI and Avaya adjuncts.

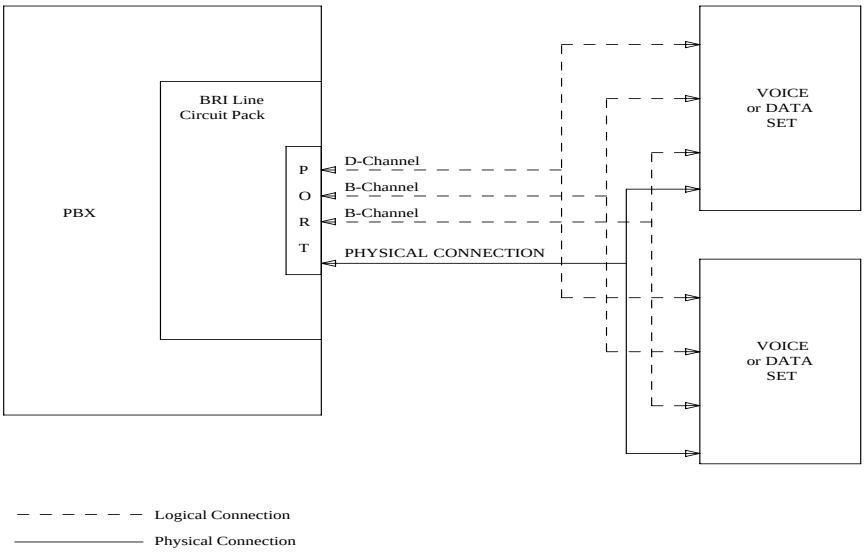

Figure 10-9. ISDN-BRI Set Interactions

This section contains the ISDN-BRI Set, ASAI Adjunct, and Avaya Adjunct Maintenance documentation. Some of the results of maintenance testing of the ISDN-BRI Set or the ASAI and Avaya Adjunct may be affected by the health of the ISDN-BRI circuit pack and Port. These interactions should be kept in mind when investigating the cause of ISDN-BRI Set problems.

Hardware Error Log Entries and Test to Clear Values

Table 10-118. BRI-SET/ASAI-ADJ Error Log Entries

Error Type	Aux Data	Associated Test	Alarm Level BRI-PORT	Alarm Level ABRI-PORT ATT-PORT LGATE-PORT ATTE-PT	On/ Off Board	Test to Clear Value
0[1]	0	Any	Any	Any	Any	test BRI-SET or ASAI-ADJ ATT-ADJ LGATE-AJ ATTE-AJ
2(a)	2-10 2	None				
18	0	busyout station ext	WARNING	MAJOR/ WARNING[2]	OFF	release station <ext>
130(b)			WARNING		ON	test port PCSS sh
257(c)	Any	BRI Layer 3 Query (#629)	WARNING	MAJOR/ WARNING[2]	OFF	test station ext r 2 test data-module ext r 2
351(d)	0	None		WARNING	OFF	busyout and release station
513(e)	0	None				
769(f)	0	None	WARNING	MAJOR	OFF	
2561(g)	0	None				
2562-2566(h)	0	None				
2567(o)	0	None				
2568(p)	0	None				
2817(i)	0	XID Test (#628)	WARNING	MAJOR/ WARNING[2]	OFF	test station ext r 2 test data-module ext r 2
3073(j)	0	BRI Remote Loop Back (#627)	WARNING		OFF	test station ext l r 2 test data-module ext l r 2
3329(k)	Any	Signaling Link Status (626)	WARNING	MAJOR/ WARNING[2]	OFF	†

Continued on next page

Table 10-118. BRI-SET/ASAI-ADJ Error Log Entries — *Continued*

Error Type	Aux Data	Associated Test	Alarm Level BRI-PORT	Alarm Level ABRI-PORT ATT-PORT LGATE-PORT ATTE-PT	On/ Off Board	Test to Clear Value
3584	0, 1	None				
3585-3839(i)	0	None				
3840-4095 (m) (n)	0	None				

1 Run the Short Test Sequence first. If all tests pass, run the Long Test Sequence. Refer to the appropriate test description and follow the recommended procedures.

2 Major alarms on this MO may be downgraded to Warning alarms based on the value used in the **set options** command.

Notes:

a. Errors of this type indicate violations of the ISDN-BRI signaling protocol; timers associated with certain Layer 3 messages have expired before a required response was received. In the following table, the aux data field indicates which timer has just expired. (For more information, refer to the Avaya ISDN-BRI Specification.)

Aux Data	Timer Type
2	First T303 (SETUP timer)
3	Second T303 (SETUP timer)
4	T305 (DISConnect timer)
5	First T308 (RELease timer)
6	Second T308 (RELease timer)
10	T316 (RESTart timer)
12	T309 (Layer 2 Failure timer)
16	TM100 (Management Information Message timer 1)
17	TM200 (Management Information Message timer 2)
102	TASAI (ASAI Routing Timer)

The switch sent a message to the endpoint which did not respond in the allotted time. This can happen occasionally due to failure of the point-to-point signaling link or because of a problem in the BRI endpoint or

ASAI adjunct or Avaya adjunct. Execute the **test station extension sh** command and pay particular attention to the results of the BRI Layer 3 Query Test (#629). If this test fails, follow the repair procedure for Test #629.

b. This error type indicates that the circuit pack has been removed or has been insane for more than 11 minutes. To clear the error, replace or reinsert the circuit pack.

c. This error occurs when the endpoint does not respond to the service state query message sent to the adjunct or the endpoint. This error causes an alarm to be raised. The alarm is retired when the switch receives a response to the service state query to the endpoint or the adjunct.

   For BRI endpoints, the Aux Data field for this error contains “0.” When it occurs, execute the **test station extension sh** command and pay particular attention to the results of the BRI Layer 3 Query Test (#629). If this test fails, follow the repair procedure for Test #629.

   When this error occurs for an ASAI or Avaya adjunct, the Aux Data field indicates the state of the ASAI link or Avaya link and whether an invalid response or no response was received to the query from the switch, as shown in the following table:

Aux Data	ASAI Link State	Error
102	13-restarting	No response to RESTART message
104	13-restarting	Invalid response to RESTART message
152	13-restarted	No response to Layer 3 query
154	13-restarted	Invalid response to Layer 3 query
202	13-established	No response to Layer 3 query
204	13-established	Invalid response to Layer 3 query

   (See “Status BRI-Port” in Chapter 8, “Maintenance Commands and Trouble-Clearing Aids” for an explanation of the ASAI link states.)

   For ASAI or Avaya adjuncts, the switch automatically queries the adjunct every two minutes (and therefore the Layer 3 Query Test is not executed for ASAI or Avaya adjuncts via a command issued from the G3MT terminal). While alarmed for this error, the switch momentarily (for five seconds) takes the associated port out-of-service every 15 minutes. This action is taken in an attempt to stimulate recovery actions to be taken by the adjunct.

When this error occurs for an ASAI or Avaya adjunct, the service technician should:

1. Execute the **test station extension** command, paying particular attention to any tests which fail, and perform the associated repair procedures for those tests.
2. Check the health of the adjunct by following the recommended repair procedures of the manufacturer of the adjunct if the preceding step does not resolve the problem.
3. The alarm condition persists and, if the above steps do not resolve the problem, follow normal escalation procedures.

d. This error and associated WARNING alarm are logged against an ASAI or Avaya endpoint when the adjunct has asked the switch to suspend Maintenance on the ASAI or Avaya endpoint. Busying out and releasing the ASAI station or ADJLK station will clear this alarm.

e. This error occurs when the endpoint sends more messages than the switch can handle. The switch suspends the reception of messages from the endpoint for a short period of time. There is no repair procedure for this error. If the condition persists, replace the endpoint.

f. This error occurs when the signaling link associated with a BRI endpoint has too much link establishment related traffic. This could occur if the signaling link is bouncing between assigned and established states. Software will suspend activity to this endpoint for 75 minutes when the endpoint is alarmed due to this problem (note that service suspension does not occur if the endpoint is an ASAI or Avaya adjunct). If this problem persists, replace the endpoint. If replacing the endpoint does not fix the problem, follow normal escalation procedures.

g. This error occurs when the ASAI-ADJ or ATT-ADJ or LGATE-AJ or ATTE-AJ message is not transmitted because the PKT-CTRL (Packet Control Circuit Pack) transmit buffers are exhausted. Frequent or persistent occurrence of these events may indicate a hardware problem or traffic overload on the PKT-CTRL, the signaling link, or the ASAI or Avaya adjunct. Attempt to resolve the problem by following the repair procedures for the PKT-CTRL. If these attempts fail, the problem should be escalated because re-engineering of the traffic on the PKT-CTRL, signaling link, or adjunct may be necessary.

h. This error occurs when the ASAI message is not transmitted because the transmit buffer for the ASAI link is full, causing the link to be flow controlled. Frequent or persistent occurrence of these events may indicate a hardware problem or traffic overload on the PKT-CTRL, the signaling link, or the ASAI or Avaya adjunct. Attempt to resolve the problem by following the repair procedures issued by the manufacturer of the adjunct. If these attempts fail, the problem should be escalated because re-engineering of the traffic on the PKT-CTRL, signaling link, or adjunct may be necessary.

i. This error indicates a problem with Layer 2 over the D-channel between the switch and the endpoint. When this error occurs, an alarm is raised against the station or adjunct. Execute the **test station <*extension*> short** command and pay particular attention to the results of the BRI XID Test (#628). If this test fails, follow the repair procedure for Test #628.

j. This error indicates a problem with the B-channel connection between the switch and the endpoint. When this error occurs, a warning alarm is raised against the endpoint. Execute the **test station <*extension*> long** command, and pay particular attention to the results of the BRI Remote Loop Back Test (#627). If this test fails, follow the repair procedure for Test #627.

k. This error occurs whenever the point-to-point signaling link to the endpoint goes down (except when it goes down because either the PKT-CTRL or the PKT-BUS has failed or has been busied out by system technician). When this error occurs, an alarm is raised against the endpoint or adjunct. Execute the **test station <*extension*> short** command and pay particular attention to the results of the Signaling Link Status Test (#626). If this test fails, follow the repair procedure for Test #626. The alarm is retired when the signaling link is reestablished to the endpoint or adjunct.

l. Certain ASAI protocol-specific cause codes are logged by switch software. The cause code can be determined from the following formula:

   If the error type is greater than 3712, then the ASAI cause code is equal to the error type minus 3712. This code was sent to the adjunct by the switch.

   If the error type is less than 3712, then the ASAI cause code is equal to the error type minus 3584. This code was sent to the switch by the adjunct.

   A description of the various ASAI cause values is contained in the Table 10-64. This table also contains recommended system technician actions associated with the cause value. Further information can also be found in the Avaya ASAI Specification (288-500-03). In addition, the Aux Data field of the Error Log entry contains additional diagnostic information.

Table 10-119. ASAI Cause Values

Code	Explanation	Recommendation
	Service or Option Not Available	
0	Unrecognized ASAIProtocol Operation	Requested ASAI protocol operation is not implemented by the switch or adjunct. Aux Data field of Error Log entry contains protocol identifier for unrecognized operation. 1. Consult switch and adjunct documentation to determine which set of operations is supported by the switch and the adjunct. Adjunct administration turning off operations not implemented by the switch may resolve the problem. 2. If Step 1 does not resolve the problem, escalate to the next tier.
40	Resources not available	No available internal resources to service switch or adjunct request. System transaction capacity for adjunct or switch is exceeded. 1. Re-engineering of adjunct services my be required. If problem persists, escalate problem to the next tier.
63	Service or Option Not Available	Requested ASAI capability or resource is not available on the switch or adjunct. More than one adjunct may be contending for the same switch resources. Potential administration mismatch between the resource domains administered on the switch and those administered on the adjunct. 1. Verify that no overlapping administration of switch resources (e.g., requesting notifications on a single domain by multiple adjuncts or multiple adjuncts attempting to control a single call) exists across all adjuncts connected to the switch. If overlaps exist, then readminister the adjuncts to guarantee that each adjunct is associated with a unique set of switch resources. 2. If Step 1 does not resolve the problem, escalate to the next tier.

Continued on next page

Table 10-119. ASAI Cause Values — *Continued*

Code	Explanation	Recommendation
	Service or Option Not Implemented	
79	Service or Option Not Implemented	Requested service or option (or combination of selected options) is not supported (implemented) in switch or the adjunct. 1. Consult switch and adjunct documentation to determine ASAI service and options supported by both switch and adjunct. Readministration of the switch-administered capabilities (see Customer Optional Feature Form) or those of the adjunct may be necessary to correct the problem. 2. If Step 1 does not provide the set of desired services due to deficient implementation, escalate the problem to the next tier.
	Switch Error Conditions	
87	Internal Switch Audit	There is an inconsistency in switch data records. 1. There is no action needed since the switch has corrected the data inconsistency. 2. If a number of these errors continue to occur, then escalate to next tier.

m. Certain ISDN-BRI cause codes are logged by switch software. The cause code can be determined from the following formula:

If the error type is greater than 3968, then the ISDN-BRI cause code is equal to the error type minus 3968. This code was sent to the endpoint by the switch.

If the error type is less than 3968, then the ISDN-BRI cause code is equal to the error type minus 3840. This code was sent to the switch by the endpoint.

A description of the various ISDN-BRI cause values is contained in Table 10-65. This table also contains recommended system technician actions associated with the cause value. Further information can also be found in the Avaya ISDN-BRI Specification (801-802-100). In addition, the Aux Data field of the Error Log entry contains additional diagnostic information.

n. Error 3847 indicates that sets on the port do not support level 3 initialization. Consult the Set Service documentation

o. For the Error 2567 indicates that the version of ASAI is not supported, check version of the software running on the ASAI or Avaya adjunct.

p. For Error 2568 indicates that the adjunct id is invalid, check the vender id or software running on the Avaya adjunct.

Table 10-120. ISDN-BRI Cause Values

Code	Explanation	Recommendation
	Channel in Use	
1		Requested channel is in use by another station on the BRI-PORT. (Not applicable for ASAI or Avaya adjuncts.) For BRI endpoints: 1. Try to originate a call to or from this port. 2. If the error persists, busy out and release the port. 3. If the problem still persists, replace stations on the port. 4. If the problem still persists, escalate to the next tier.
	SWITCH RESOURCES NOT AVAILABLE	
34	No circuit or channel available	A resource on the switch is unavailable for a call. For BRI endpoints: This cause value is not logged. For ASAI or Avaya Adjuncts: This condition means that there are no available trunks for an outgoing call request. 1. Verify that the adjunct is administered to support the trunk capabilities of the switch. 2. Investigate trunk group status by issuing **status trunk** commands from the SAT or by requesting a trunk group query or queries from the adjunct. 3. Perform trunk diagnostic procedures outlined in this manual. 4. If step 3 does not resolve the problem, escalate to the next tier.

Continued on next page

Table 10-120. ISDN-BRI Cause Values — *Continued*

Code	Explanation	Recommendation
42	Switch Equipment Congestion	Switch takes control to limit received traffic. For BRI endpoints: This cause value is not logged. For ASAI or Avaya Adjuncts: 1. See CallVisor protocol reference manual. 2. If step 1 does not resolve the problem, escalate to the next tier.
	Service or Option Not Available	

Continued on next page

Table 10-120. ISDN-BRI Cause Values — *Continued*

Code	Explanation	Recommendation
50	Requested Facility Not Subscribed	Requested facility is implemented, but not administered. Potential administration problem with endpoint or adjunct. For BRI endpoints: 1. Verify the switch administration of endpoint using either the **display station** or **display data-module** commands. 2. If Step 1 does not resolve the problem, refer to the endpoint's service manual and verify administration on the endpoint. 3. If Step 2 does not resolve the problem, escalate to the next tier. For ASAI adjuncts: 1. Display the Customer Optional Features Form (administration screen) on the switch to determine which ASAI capabilities are turned on in the switch. 2. Verify that the adjunct is administered to support the identical capabilities as the switch. If there is a mismatch in the administered capabilities, then readminister the switch and/or the adjunct to establish a consistent set of desired capabilities on both the switch and the adjunct. 3. If Step 2 does not resolve the problem, escalate to the next tier. For Avaya adjuncts: 1. Display the Customer Optional Features Form (administration screen) on the switch to determine if the Avaya adjunct is set enabled on in the switch. 2. If error type 2567 or 2568, verify the Avaya adjunct version, and readminister if needed. 3. If step 2 does not fix the problem, escalate to the next tier of support.
58	Bearer Capability Not Presently Available	Requested bearer capability is implemented, but not administered. No B-channel administered. See recommendation 50 above.
	Service or Option Not Implemented	

Continued on next page

Table 10-120. ISDN-BRI Cause Values — *Continued*

Code	Explanation	Recommendation
65	Bearer Service Not Implemented	Requested service not implemented in switch or endpoint.
69	Requested Facility Not Implemented	Requested service not supported in switch or endpoint. 1. Consult switch and endpoint documentation to determine service support. 2. If Step 1 does not resolve the problem, escalate to the next tier.
ADJUNCT/SWITCH ERROR CONDITIONS		
81	Invalid CRV	An invalid CRV was sent by the adjunct. 1. This may indicate a CRV inconsistency between the switch and the adjunct. See the CallVisor protocol reference manual. 2. If step 1 does not resolve the problem, escalate to the next tier.

System Technician-Demanded Tests: Descriptions and Error Codes

When inspecting errors in the system and deciding which ones to address, always investigate errors associated with the circuit pack and port first. Clearing these error codes first may also clear errors generated against the endpoint. When all circuit pack and port errors have been cleared, and errors still exist against the endpoint, always investigate errors in the order they are presented in the table below. By clearing error codes associated with the *Signaling Link Status Test,* for example, you may also clear errors generated from other tests in the testing sequence.

Table 10-121. System Technician-Demanded Tests: BRI-SET

Order of Investigation	Short Test Sequence	Long Test Sequence	D/ND[1]
Signaling Link Status Test (#626)	X	X	ND
BRI XID Test (#628)	X	X	ND
BRI Layer 3 Query (#629)	X (a)	X (a)	ND
BRI Remote Loop Back (#627)		X (a)	ND
BRI Set Audits (#630)	X (a)	X (a)	ND
BRI Vendor ID Test (#631)		X (a)	ND
BRI Model/Vintage ID Test (#632)		X (a)	ND

1 D = Destructive, ND = Non-destructive

Note:

a. Will execute the **test port long PCSSpp** command, and review the results of the BRI Port Local LAN Loop Around Test to verify the repair.

Signaling Link Status Test (#626)

This test determines the current status of the signaling link. This test passes if the link is “bound” to an endpoint and fails if the link is “not bound.”

The definition of the term “bound” for a link depends upon the type of endpoint and may depend on the successful completion of procedures at both Layers 2 and 3 of the protocol. The definition of “bound” for each type of endpoint is as follows:

- **BRI endpoints administered for MIM (management information messages) initialization (multipoint):**

  NOTE:
  An MIM is a level 3 message that conveys management and maintenance information between a communications system and a BRI terminal.

  For endpoints of this type, the signaling link is “bound” when the link is connected at Layer 2 and the link has been associated with an endpoint, [that is, the endpoint has completed SPID initialization (L3 established)].

- **ASAI adjuncts and BRI endpoints not administered for MIM initialization (point-to-point):**

  For endpoints of this type, the signaling link is “bound” when the link is connected at Layer 2 (L2 established).

For all endpoint types, a signaling link becomes “unbound” when it is disconnected at Layer 2. For BRI endpoints supporting MIM initialization, a signaling link may also become “unbound” if a subsequent attempt to perform SPID initialization on a “bound” link fails, (that is, wrong SPID is entered into the endpoint by the user).

Table 10-122. TEST #626 Signaling Link Status Test

Error Code	Test Result	Description/Recommendation
1139	ABORT	The Packet Bus in the port network is out-of-service. 1. Follow the repair procedures for the Packet Bus. 2. After completing Step 1, execute the **test port long PCSSpp** command, and review the results of the BRI Port Local LAN Loop Around Test to verify the repair.
1141	ABORT	The PKT-CTRL is out-of-service. 1. Refer to PKT-CTRL (Packet Control Circuit Pack) Maintenance documentation. 2. If Step 1 does not resolve the problem, escalate to the next tier.
1144	ABORT	The PPN Packet Bus is out-of-service. 1. Follow the repair procedures for the Packet Bus in the PPN. 2. After completing Step 1, execute the **test port long PCSSpp** command, and review the results of the BRI Port Local LAN Loop Around Test to verify the repair.

Continued on next page

Table 10-122. TEST #626 Signaling Link Status Test — *Continued*

Error Code	Test Result	Description/Recommendation
1187	ABORT	The circuit pack, port or station may have been busied out by a technician. 1. Look in the Error Log for Error Type 18 (busied out) for BRI-BD, BRI-PORT, or BRI-SET. 2. If this error type is present for BRI-SET only, then release the station via the **release station** command. a. If this error type is present for BRI-PORT and BRI-SET, then release the port via the **release port PCSSpp** command and run the test again. b. If the error is present for BRI-BD, BRI-PORT, and BRI-SET, then release the circuit pack via the **release port PCSSpp** command and run the test again. If the error is present for BRI-SET only, then release the circuit pack via the **release port PPCSS** command and run the test again. If the error is present for both BRI-BD and BRI-PORT, then release the circuit pack via the **release board PPCSS** command and run the test again. **NOTE:** When you release the circuit pack, you release all ports associated with it. If certain ports still need to be busied out, use the **release port PCSSpp** command to busy them out. 3. Make sure the terminal is connected. 4. Retry the command at 1-minute intervals a maximum of 5 times. 5. If the test continues to abort, escalate the problem.

Continued on next page

Table 10-122. TEST #626 Signaling Link Status Test — *Continued*

Error Code	Test Result	Description/Recommendation
2012	ABORT	Internal System Error.
2100	ABORT	Could not allocate the necessary system resources to run this test. 1. Retry the command at 1-minute intervals a maximum of 5 times.
1113	FAIL	The signaling link is not “bound” to the adjunct or endpoint. For BRI endpoints supporting MIM initialization, this error indicates that the endpoint has not been bound to a signaling link (that is, SPID initialization has not been completed). Since the signaling link associated with the endpoint is not identified until SPID initialization completes, this error does not imply that the signaling link is connected or disconnected at Layer 2 nor does it provide the status of TEI assignment for the endpoint. For ASAI adjuncts and BRI endpoints not supporting MIM initialization, this error indicates that the link is disconnected at Layer 2. Since the signaling link associated with the endpoint has been identified via administration, the link is only “unbound” from the endpoint when it is disconnected. 1. Execute the **status bri-port PCSSpp** command and refer to the associated procedures for this command contained in the BRI-PORT (ISDN-BRI Port) Maintenance documentation.
	PASS	The signaling link is connected at Layer 2 and “bound” to the BRI endpoint or ASAI adjunct.

BRI Remote Loop Back Test (#627)

This test checks the integrity of a circuit switched B-channel connection between the switch and the endpoint.

In this test, the endpoint is put in the “maintenance busy” state to prevent the switch from issuing calls to the endpoint during the test. An application message containing a loop back activate request for the appropriate B-channel is sent to the endpoint. The endpoint responds with a loop back activated response. Maintenance then sends data to the endpoint over the B-channel under test. Since the B-channel is looped back at the endpoint, maintenance should receive the data that it sent. If no data is detected, the test fails. An application message containing a loop back deactivate request is then sent to the endpoint to terminate the remote loop back test. The endpoint responds with an MIM message containing a loop back deactivate response. Maintenance then releases the endpoint so that it is available to terminate calls.

This test is not executed for ASAI adjuncts because adjuncts do not support MIMs upon which this test is based.

Table 10-123. TEST #627 BRI Remote Loop Back

Error Code	Test Result	Description/Recommendation
1000	ABORT	Could not seize the endpoint or B-channels for test. 1. Retry the command at 1-minute intervals a maximum of 5 times.
1005	ABORT	The endpoint's MIMs Supported field is administered to "no." 1. Use the **change station extension** command to change parameter only if the endpoint documentation reflects support for ISDN-BRI Management and Maintenance Procedures.
1113	ABORT	The signaling link between the switch and the endpoint is down. 1. Use the **test port PCSSpp long** command to clear any errors which prevent establishment of the signaling link. 2. Examine the results of the Signaling Link Status Test (#626) which is run as part of this command. If this test aborts or fails, follow the repair procedure for Test #626. 3. If the XID Test #628 continues to abort, escalate the problem.
1139	ABORT	The Packet Bus in the port network is out-of-service. 1. Follow the repair procedures for the Packet Bus. 2. After completing Step 1, execute the **test port long PCSSpp** command, and review the results of the BRI Port Local LAN Loop Around Test to verify the repair.
1141	ABORT	The PKT-CTRL is out-of-service. 1. Refer to PKT-CTRL (Packet Control Circuit Pack) Maintenance documentation. 2. If Step 1 does not resolve the problem, escalate to the next tier.
1144	ABORT	The PPN Packet Bus is out-of-service. 1. Follow the repair procedures for the Packet Bus in the PPN. 2. After completing Step 1, execute the **test port long PCSSpp** command, and review the results of the BRI Port Local LAN Loop Around Test to verify the repair.

Continued on next page

Table 10-123. TEST #627 BRI Remote Loop Back — *Continued*

Error Code	Test Result	Description/Recommendation
1187	ABORT	The circuit pack, port or station may have been busied out by a technician. 1. Look in the Error Log for Error Type 18 (busied out) for BRI-BD, BRI-PORT, or BRI-SET. 2. If this error type is present for BRI-SET only, then release the station via the **release station** command. a. If this error type is present for BRI-PORT and BRI-SET, then release the port via **release port PCSSpp** command and run the test again. b. If the error is present for BRI-BD, BRI-PORT, and BRI-SET, then release the circuit pack via the **release port PCSSpp** command and run the test again. If the error is present for both BRI-BD and BRI-PORT, then release the circuit pack via the **release board PPCSS** command and run the test again. If the error is present for BRI-SET only, then release the circuit pack via the **release port PPCSS** command and run the test again. **NOTE:** When you release the circuit pack, you release all ports associated with it. If certain ports still need to be busied out, use the **release port PCSSpp** command to busy them out. 3. Make sure the terminal is connected. 4. Retry the command at 1-minute intervals a maximum of 5 times.
2012	ABORT	Internal System Error. 1. Retry the command at 1-minute intervals a maximum of 5 times.
2068	ABORT	The endpoint has rejected the switch sent application message. This indicates that the endpoint does not support the ISDN-BRI Management and Maintenance Procedure for Loop Back Testing. 1. Use the **change station extension** command and change the MIMs Supported field to “no.”

Continued on next page

Table 10-123. TEST #627 BRI Remote Loop Back — *Continued*

Error Code	Test Result	Description/Recommendation
2069	ABORT	The endpoint has returned an error response to the application message sent by the switch.
2100	ABORT	Could not allocate the necessary system resources to run this test. 1. Retry the command at 1-minute intervals a maximum of 5 times.
2000	FAIL	No loop back activation or deactivation response is received from the endpoint. 1. Consult the endpoint documentation to determine if ISDN-BRI Management and Maintenance Procedures are supported. If not supported, use **change station extension** command to change the MIMs Supported? field to “no.” Use the **busyout station extension** and **release station extension** commands to busyout and release the endpoint to resolve any endpoint alarms resulting from failure of this test. 2. If the endpoint supports these procedures and the test continues to fail, assume the endpoint is defective and replace it.
2071	FAIL	No data is detected on Channel B1 during loop back.
2072	FAIL	No data is detected on Channel B2 during loop back. 1. Replace the endpoint and repeat test. 2. If test continues to fail, check the wiring between the endpoint and the switch and repeat the test.
	PASS	The endpoint has responded to the switch activate and deactivate loop back application messages. Data has been detected on the looped back channels.
1000	ABORT	Could not seize the endpoint or B-channels for test. 1. Retry the command at 1-minute intervals a maximum of 5 times.

BRI XID Test (#628)

This test checks the D-channel connection between the SPE and the endpoint or adjunct.

In this test, a D-channel XID frame is sent to the endpoint or adjunct over the point-to-point signaling link. The test passes if the endpoint or adjunct responds with a Layer 2 XID-RESPONSE frame.

This test must be administered to not run in the station administration form for ports on a TN2208.

Table 10-124. TEST #628 BRI XID

Error Code	Test Result	Description/Recommendation
1000	ABORT	The BRI-SET, ASAI-ADJ, ATT-ADJ, LGATE-AJ, ATTE-AJ is busy. The test cannot be executed at this time: 1. Pause momentarily (30 seconds) and re-execute at this time. 2. If this problem persists, escalate this problem. **NOTE:** A BRI-PORT can also be busy. When using this for BRI-PORT/ABRI-PORT tests, the words “BRI-SET, ASAI-ADJ, ATT-ADJ,“ can be changed to “BRI-PORT, ABRI-PORT, ATT-ADJ.“
1005	ABORT	The endpoint is not administered to support XID Testing. 1. If the endpoint documentation reflects support XID testing, use the **change station extension** command to change the *XID Testing?* field on the form to **y**.
1113	ABORT	The signaling link between the switch and the endpoint is down. 1. Use the **test port PCSSpp long** command to clear any errors which prevent establishment of the signaling link. 2. Examine the results of the Signaling Link Status Test (#626) which is run as part of this command. If this test aborts or fails, follow the repair procedure for Test #626. 3. If the XID test continues to abort, escalate the problem.
1139	ABORT	The Packet Bus in the port network is out-of-service. 1. Follow the repair procedures for the Packet Bus. 2. After completing Step 1, execute the **test port long PCSSpp** command, and review the results of the BRI Port Local LAN Loop Around Test to verify the repair.

Continued on next page

Table 10-124. TEST #628 BRI XID — *Continued*

Error Code	Test Result	Description/Recommendation
1141	ABORT	The PKT-CTRL is out-of-service. 1. Refer to PKT-CTRL (Packet Control Circuit Pack) Maintenance documentation. 2. If Step 1 does not resolve the problem, escalate to the next tier.
1144	ABORT	The PPN Packet Bus is out-of-service. 1. Follow the repair procedures for the Packet Bus in the PPN. 2. After completing Step 1, execute the **test port long PCSSpp** command, and review the results of the BRI Port Local LAN Loop Around Test to verify the repair.
1187	ABORT	The circuit pack, port or station may have been busied out by a technician. 1. Look in the Error Log for Error Type 18 (busied out) for BRI-BD, BRI-PORT, or BRI-SET. 2. If this error type is present for BRI-SET only, then release the station via the **release station** command. a. If this error type is present for BRI-PORT and BRI-SET, then release the port via **release port PCSSpp** command and run the test again. b. If the error is present for BRI-BD, BRI-PORT, and BRI-SET, then release the circuit pack via the **release port PCSSpp** command and run the test again. If the error is present for BRI-SET only, then release the circuit pack via the **release port PCSSpp** command and run the test again. If the error is present for both BRI-BD and BRI-PORT, then release the circuit pack via the **release board PPCSS** command and run the test again. **NOTE:** When you release the circuit pack, you release all ports associated with it. If certain ports still need to be busied out, use the **release port PCSSpp** command to busy them out. 3. Make sure the terminal is connected. 4. Retry the command at 1-minute intervals a maximum of 5 times.

Continued on next page

Table 10-124. TEST #628 BRI XID — *Continued*

Error Code	Test Result	Description/Recommendation
2012	ABORT	Internal System Error.
2100	ABORT	Could not allocate the necessary system resources to run this test. 1. Retry the command at 1-minute intervals a maximum of 5 times.
2000	FAIL	The XID-RESPONSE message was not received from the endpoint. 1. Consult the endpoint documentation to determine if the Layer 2 XID and XID-RESPONSE messages are supported. If the documentation reflects no support for these messages, change XID Testing? field to “no” using the **change station extension** command. 2. If the endpoint supports these Layer 2 messages and the test continues to fail, assume the endpoint is defective and replace it.
	PASS	The switch can successfully pass messages over the D-channel to the BRI endpoint.

BRI Layer 3 Query Test (#629)

This test is used to check the application layer communications between the switch and the endpoint or adjunct.

For BRI endpoints, an application message containing the appropriate endpoint service state is sent by the switch to the endpoint. The endpoint responds with an acknowledgment to the application message.

For ASAI and Avaya adjuncts, this test is not executed from the administration terminal. Rather, a query message is automatically sent by the switch every two minutes. Failure of the switch to receive a response to a query from the adjunct is logged in the Hardware Error Log.

Table 10-125. TEST #629 BRI Layer 3 Query

Error Code	Test Result	Description/Recommendation
1005	ABORT	The endpoint's MIMs Supported? field is administered to "no." 1. Use the **change station extension** command to change the parameter only if the endpoint documentation reflects support for ISDN-BRI Management and Maintenance Procedures.
1113	ABORT	The signaling link between the switch and the endpoint or adjunct is down. 1. Use the **test port PCSSpp long** command to clear any errors which prevent establishment of the signaling link. 2. Examine the results of Test #626, which is executed with the command. If this test aborts or fails, follow the repair procedure for the Signaling Link Status Test. 3. Escalate problem if BRI Layer 3 Query Test continues to abort.
1139	ABORT	The Packet Bus in the port network is out-of-service. 1. Follow the repair procedures for the Packet Bus. 2. After completing Step 1, execute the **test port long PCSSpp** command, and review the results of the BRI Port Local LAN Loop Around Test to verify the repair.
1141	ABORT	The PKT-CTRL is out-of-service. 1. Consult the repair procedure for PKT-CTRL (Packet Control Circuit Pack) Maintenance documentation.
1144	ABORT	The PPN Packet Bus is out-of-service. 1. Follow the repair procedures for the Packet Bus in the PPN. 2. After completing Step 1, execute the **test port long PCSSpp** command, and review the results of the BRI Port Local LAN Loop Around Test to verify the repair.

Continued on next page

Table 10-125. TEST #629 BRI Layer 3 Query — *Continued*

Error Code	Test Result	Description/Recommendation
1187	ABORT	The circuit pack, port or station may have been busied out by a technician. 1. Look in the Error Log for Error Type 18 (busied out) for BRI-BD, BRI-PORT, or BRI-SET. 2. If this error type is present for BRI-SET only, then release the station via the **release station** command. a. If this error type is present for BRI-PORT and BRI-SET, then release the port via the **release port PCSSpp** command and run the test again. b. If the error is present for BRI-BD, BRI-PORT, and BRI-SET, then release the circuit pack via the **release port PCSSpp** command and run the test again. If the error is present for BRI-SET only, then release the circuit pack via the **release port PPCSS** command and run the test again. If the error is present for both BRI-BD and BRI-PORT, then release the circuit pack via the **release board PPCSS** command and run the test again. **NOTE:** When you release the circuit pack, you release all ports associated with it. If certain ports still need to be busied out, use the **release port PCSSpp** command to busy them out. 3. Make sure the terminal is connected. 4. Retry the command at 1-minute intervals a maximum of 5 times.
2012	ABORT	Internal System Error.
2100	ABORT	Could not allocate the necessary system resources to run this test. 1. Retry the command at 1-minute intervals a maximum of 5 times.
2068	ABORT	The endpoint has rejected the switch sent application message. This indicates that the endpoint does not support the ISDN-BRI Management and Maintenance Procedure for Endpoint Service Messages. 1. Use the **change station extension** command and change the MIMs Supported? field to “no.”

Continued on next page

Table 10-125. TEST #629 BRI Layer 3 Query — *Continued*

Error Code	Test Result	Description/Recommendation
2069	ABORT	The endpoint has returned an error response to the switch sent application message. 1. Retry the command at 1-minute intervals a maximum of 5 times.
2000	FAIL	No response is received from the endpoint or the adjunct. For BRI endpoints: 1. Consult the endpoint documentation to determine if ISDN-BRI Management and Maintenance Procedures are supported. If not supported, use the **change station extension** command to change the “MIMs Supported?” field to “no.” Use the **busyout station extension** and **release station extension** commands to busyout and release the endpoint to resolve any endpoint alarms resulting from failure of this test. 2. If the endpoint supports these procedures and the test continues to fail, assume the endpoint is defective and replace it.
	PASS	The endpoint has successfully responded to the switch’s application message.

BRI Set Audits Test (#630)

This is a series of two tests which are classified as audits. The switch sends messages to the BRI endpoint to perform the following tests:

- Ringer Audit - This audit ensures that both the switch and the endpoint agree as to the current state of the endpoint’s ringer.
- Lamps Audit - This audit ensures that both the switch and the endpoint agree as to the current state of the endpoint’s lamps.
- Call Activity Audit - This audit ensures that the state of calls is consistent between the switch and the endpoint.

This test is not executed for ASAI or Avaya adjunct because adjuncts do not employ ringers or lamps, or establish calls on the B-channels associated with the BRI interface.

Table 10-126. TEST #630 BRI Set Audits

Error Code	Test Result	Description/Recommendation
1113	ABORT	The signaling link between the switch and the endpoint is down. 1. Use the **test port PCSSpp long** command to clear any errors which prevent establishment of the signaling link. 2. Examine the results of the Signaling Link Status Test (#626) which is run as part of this command. If this test aborts or fails, follow the repair procedure for Test #626. 3. If the BRI Set Audits test continues to abort, escalate the problem.
1139	ABORT	The Packet Bus in the port network is out-of-service. 1. Follow the repair procedures for the Packet Bus. 2. After completing Step 1, execute the **test port long PCSSpp** command, and review the results of the BRI Port Local LAN Loop Around Test to verify the repair.
1141	ABORT	The PKT-CTRL is out-of-service. 1. Refer to PKT-CTRL (Packet Control Circuit Pack) Maintenance documentation.
1144	ABORT	The PPN Packet Bus is out-of-service. 1. Follow the repair procedures for the Packet Bus in the PPN. 2. After completing Step 1, execute the **test port long PCSSpp** command, and review the results of the BRI Port Local LAN Loop Around Test to verify the repair.

Continued on next page

Table 10-126. TEST #630 BRI Set Audits — *Continued*

Error Code	Test Result	Description/Recommendation
1187	ABORT	The circuit pack, port or station may have been busied out by a technician. 1. Look in the Error Log for Error Type 18 (busied out) for BRI-BD, BRI-PORT, or BRI-SET. 2. If this error type is present for BRI-SET only, then release the station via the **release station** command. a. If this error type is present for BRI-PORT and BRI-SET, then release the port via the **release port PCSSpp** command and run the test again. b. If the error is present for BRI-BD, BRI-PORT, and BRI-SET, then release the circuit pack via the **release port PCSSpp** command and run the test again. If the error is present for both BRI-BD and BRI-PORT, then release the circuit pack via the **release board PPCSS** command and run the test again. **NOTE:** When you release the circuit pack, you release all ports associated with it. If certain ports still need to be busied out, use the **release port PCSSpp** command to busy them out. 3. Make sure the terminal is connected. 4. Retry the command at 1-minute intervals a maximum of 5 times.
2012	ABORT	Internal System Error.
2100	ABORT	Could not allocate the necessary system resources to run this test. 1. Retry the command at 1-minute intervals a maximum of 5 times.

SPID Facility Test

This test is used to verify the wiring and operation of the signaling link between the switch and a endpoint or adjunct on a BRI interface. **This test is not executed from the administration terminal, but rather is executed by using a BRI test set equipped with a display.** The test set may replace the BRI set, ASAI or Avaya adjunct under test by plugging it into the same jack or by bridging it onto the wiring at some point between the switch and the endpoint (or adjunct), thereby creating a pseudo-BRI multipoint configuration.

When plugged into the port in this manner, the test set establishes a signaling link connection with the switch and attempts to complete SPID initialization by using the Service SPID administered for the system (see the System Maintenance Administration Form). If the test set displays the correct administered port address for the endpoint or adjunct under test, the test passes (see Service SPID Display which follows). If after one minute nothing is displayed on the test set, the test fails.

Table 10-127. SPID Facility Test

Test Result	Description/Recommendation
FAIL	No response is received from the endpoint. 1. Check the physical wiring between the switch and the endpoint or adjunct.
FAIL	Display does not match administered port address for the endpoint or adjunct. 1. Change station administration for endpoint or adjunct to match displayed port address.
PASS	Display matches administered port address for the endpoint or adjunct. For BRI endpoints: 1. Verify that the SPID values administered in the switch and the endpoint are consistent. 2. If the SPID values are correct, replace the endpoint. 3. If test continues to fail, escalate the problem. For ASAI adjuncts: 1. Verify that the TEI values administered in the switch and the adjunct are consistent. 2. If the TEI values are correct, consult the recommended repair procedures of the manufacturer for the adjunct.

The abbreviations used in (Service SPID Display) have the following meanings:

P	port network (1,2,...)
C	Carrier (A,B,C,...)
SS	Slot (01, 02,...)
pp	port (01-12)
ext	extension one and two (one through 99999)
SPID	service order profile identifier

Restricted Service
Starting Display Column

1		8		14		25		31
PCSSpp	-	ext1	-	SPID111111	-	ext2	-	SPID222222

Bound to First Endpoint Translation
Starting Display Column

1		8		14		25		31
PCSSpp	*	ext1	*	SPID111111	-	ext2	-	SPID222222

Bound to Second Endpoint Translation
Starting Display Column

1		8		14		25		31
PCSSpp	-	ext1	-	SPID111111	*	ext2	*	SPID222222

CABINET (Cabinet Sensors)

MO Name (in Alarm Log)	Alarm Level	Initial Command to Run[1]	Full Name of MO
CABINET	MAJOR	test environment P	Cabinet Sensors
CABINET	MINOR[2]	test environment P	Cabinet Sensors

1 Where P is an appropriate port network number determined via the Port field from the Alarm or Error Log.

2 If a minor alarm occurs for a variable speed fan, the fan should be checked for a dirty filter. If the filter is not dirty, the fan should be replaced.

NOTE:
CABINET is valid only in a multicarrier cabinet system. For information concerning single-carrier cabinet systems, refer to the DC-POWER (Single-Carrier Cabinet Power) Maintenance documentation.

Each multicarrier cabinet is equipped either with six non-variable speed fans or with six variable speed fans.

Non-Variable Speed (Standard) Fan Option. A non-variable speed (standard) fan is indicated by one of the following Product Codes: “ED67077 G1,” “ED67077 G2,” or “ED67077 G3.” Multicarrier cabinets with non-variable speed fans contain a fan speed control unit known as the AHD1 circuit pack. This circuit pack is designed to keep the temperature within the cabinet below 65^0 C (149^0 F). Air is drawn in by the three fans located in the front of the cabinet. The air is channeled upwards through a filter, then through carriers A, B, and C and out the top of the cabinet. Air is drawn in by the three fans located in the back of the cabinet as well. The air is channeled down through a filter, then through carriers D and E and out the bottom of the cabinet. The AHD1 circuit pack monitors five of the six temperature sensors located throughout the multicarrier cabinet, and it uses the output of these sensors to adjust fan speed and to report air flow problems. The Maintenance/Tape Processor in a Standard system PPN, the Duplication Interface circuit pack, a PPN for a High or Critical Reliability system, and the EPN Maintenance circuit pack in an EPN multicarrier cabinet system directly monitor the sixth sensor (S1) to report temperature problems. The Cabinet Sensors maintenance object represents the air flow and temperature problems reported by the AHD1 circuit pack and by the Maintenance/Tape Processor, the Duplication Interface circuit pack, or the EPN Maintenance circuit pack in the multicarrier cabinet systems.

The fans and the AHD1 circuit pack obtain their power from the -48 volt DC power supply of the 631 DB DC power unit in the A carrier. In a PPN cabinet for a High or Critical Reliability system, the 631 DB DC power unit in the B carrier can also provide power to the fans. The power goes from the power unit(s) to the current limiter card (982LS), over a wiring harness from the A carrier to the back of the fan unit, through the AHD1 circuit pack, and then to the fans. The front fans are wired

in parallel with a rear fan. The repair scenarios that follow rely on the technician's ability to distinguish between high fan speed and low fan speed. The only way to distinguish between the fan speeds is by the sound of the fans. When operating at high speed, the fans make a higher pitched sound than when they run at low speed. The technician probably knows from prior experience what the fans sound like at low speed as well as at high speed.

Figure 10-10 shows a multicarrier cabinet system and the location of the temperature sensors S1 through S4 (there are actually two S3 sensors and two S4 sensors) as well as the location of the fans, the AHD1 circuit pack, and the filters. The figure also shows other environment-related components of a multicarrier cabinet system and can be ignored for this section on Cabinet Sensors.

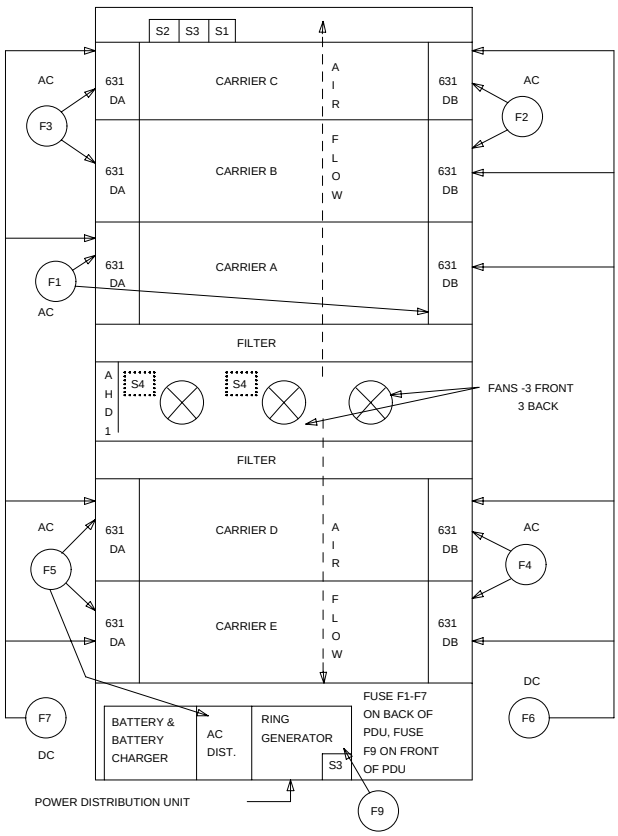

Figure 10-10. Multicarrier Cabinet Environment Components (CABINET) [Non-Variable Speed Fan Option]

Sensor S1 informs the Maintenance/Tape Processor, the Duplication Interface circuit pack, or the EPN Maintenance circuit pack when the temperature at the top of the cabinet reaches 65^0 C (149^0 F). Sensor S2 is not monitored by any circuit pack. However, when the temperature at the top of the cabinet reaches 70^0 C (158^0 F), this sensor causes the Power Distribution Unit to shut down power to the entire cabinet. At this point, Emergency Transfer is invoked, and no other system functions are provided.

The S3 and S4 sensors constantly report the temperature at the air exhaust in the cabinet (top and bottom S3 sensors) and at the air intake (S4 sensors). The AHD1 circuit pack uses this information to determine fan speed and air flow alarm state. If there is at least a 15 ^{0}C (27 ^{0}F) air temperature difference between the air exhaust and air intake, **and** if the air exhaust temperature is greater than 50 ^{0}C (122 ^{0}F), all the fans are turned up to high speed. If this condition exists, the AHD1 circuit pack reports an air flow problem which results in a Minor alarm against the Cabinet Sensors.

Variable Speed Fan Option. A variable speed fan is indicated by the Product Code “ED67077 Gx,’ where x is 4 or a number greater than 4. A variable speed fan contains Thermal Speed Control and an alarm circuit. As a result, the AHD1 circuit pack is not required in this type of fan.

A variable speed fan has two connectors: a two pin connector for the -48 volt input power for backward compatibility, and the five pin Molex connector for speed control and alarm circuitry. The -48 volt power circuitry is isolated from the speed control and the alarm circuitry.

An alarm lead from all six variable speed fans is tied to a single lead leading to the processor circuit pack. Three fans on the front of the system are connected to an S3 sensor, which monitors the exhaust air temperature above carrier position “C.” Three fans on the back of the system are connected to another S3 sensor, which monitors the exhaust air in the power distribution unit. The speed of the variable speed fans is determined by the temperature detected by the S3 sensors. Thus, the fans’ speed changes continuously according to the temperature of the exhaust air. If the fan speed drops below the preset limit, or if the fan fails, the fan alarm circuit reports an air flow problem, which results in a minor alarm.

A multicarrier cabinet containing variable speed fans is presented in Figure 10-11 on page 10-326. Note that the two S4 sensors that are included with non-variable speed fans are not required with variable speed fans.

NOTE:
The new variable speed fans are backward compatible to the carriers for the non-variable speed fans. However, the carriers for the variable speed fans are not backward compatible to cabinets configured for the carriers for the non-variable speed fans. Finally, the carriers for the non-variable speed fans are not forward compatible to cabinets configured for the carriers for variable speed fans.

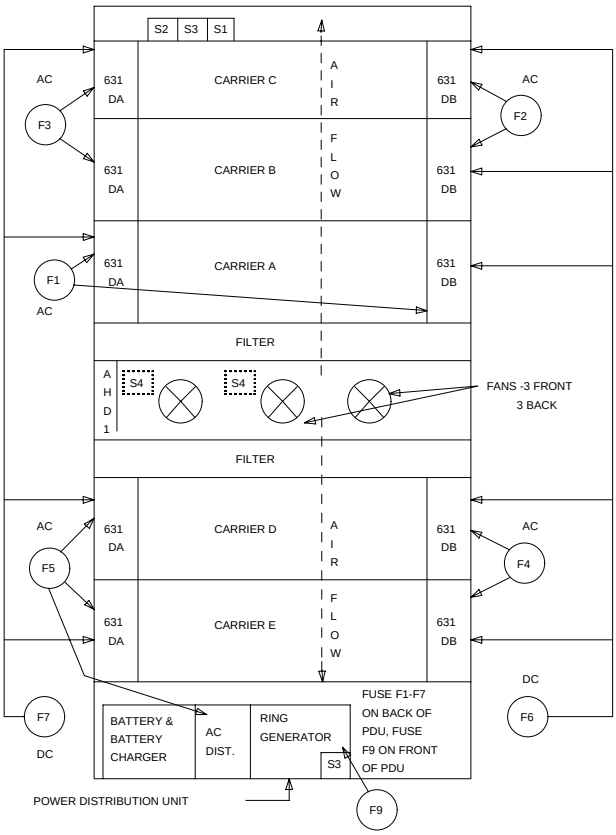

Figure 10-11. Multicarrier Cabinet Environment Components (CABINET) [Variable Speed Fan Option]

Replacement Procedures for AHD1 Fan Speed Controller Circuit Packs and Fans

AHD1 Fan Speed Controller Circuit Pack Replacement Procedure

NOTE:
The procedures in this section pertain only to non-variable speed (standard) fans.

1. Refer to Chapter 5, “Routine Maintenance Procedures”, for details on removing power from the system.
2. Remove the fan assembly cover by pulling the cover outward.
3. Loosen and remove the retaining screw nearest the power plug on the front fan located to the extreme left.
4. Disconnect the power plug from the fan.
5. Loosen and remove the other retaining screw on the fan.
6. Remove the fan from the fan assembly.

CAUTION:
DO NOT TOUCH! Resistors on the circuit pack are hot.

7. Lift the latch on the AHD1 fan speed controller circuit pack.
8. Using the latch as a handle, pull the circuit pack up and out of its holder.
9. Insert a replacement AHD1 circuit pack, and push down on the latch until the latch snaps in place.
10. Position the fan, and reconnect the fan power plug.
11. Insert and tighten the retaining screws.
12. Replace the fan assembly cover.
13. Refer to Chapter 5, “Routine Maintenance Procedures”, for details on restoring power to the switch.

Fan Replacement Procedure

NOTE:
The procedures in this section pertain to both non-variable speed (standard) fans and variable speed fans.

First, determine which fans are defective:

NOTE:
The following instructions are for servicing a Medium Cabinet. For a Small Cabinet (only two fans in the rear), follow Step 2A below, but start from the rear of the cabinet.

1. If any fan is **not** rotating, a more detailed inspection is required to determine why the fan has stopped operating. The fact that a fan is not spinning is not always proof that it is damaged. Since each front fan is electrically in parallel with a rear fan, an internal short circuit in a front fan prevents power from reaching the rear fan (and vice versa).

   Remove the fan assembly cover by pulling the cover outward. Remove the power connector from each inoperative front fan.

2. The following must be done to determine if the front fan or the rear fan has failed:

   a. Test the front fan:

      Measure the input impedance between the (+) and (-) input terminals of the front fan with an ohmmeter. **IMPORTANT: Attach the “common” lead of the ohmmeter to the fan’s (-) input terminal and the “ohms” or (+) lead of the ohmmeter to the fan’s (+) input terminal.**

      Follow the guidelines in the table below:

Input Impedance	Fan Analysis	Action	Next Step
2.0M < ohms < 20M	Good	None	Go to Step 2B
ohms < 2.0M	Short Circuit	Replace	Go to Step 3
ohms > 20M	Open Circuit	Replace	Go to Step 3

   b. Test the “paired” rear fan:

      From the front of the cabinet, use a voltmeter to measure the DC voltage across the two female contact pins in the connector housing of the fan wire harness removed from the inoperative front fan in Step 1. (This voltage is the same voltage seen across the input terminals of the paired fan in the rear of the assembly.)

Follow the guidelines in the table below:

Input Impedance	Fan Analysis	Action	Next Step
VDC > 25V	Good	(AHD1 or Front Fan failed)	
VDC < 25V	Short Circuit	Replace	Go to Step 3

3. To replace a fan located at the front of the switch cabinet, remove the fan assembly cover by pulling the cover outward. To replace a fan located at the rear of the switch cabinet, use a No. 10 slot screwdriver or 5/16-inch (8mm) wrench and remove the panel covering the fan assembly.
4. Loosen and remove the retaining screw nearest the power plug on the defective fan.

DANGER:
48-volt power is present on the fan plug.

5. Disconnect the power plug from the defective fan.
6. Loosen and remove the other retaining screw on the fan.
7. Remove the fan from the fan assembly.
8. Position the replacement fan and reconnect the fan power plug.
9. Insert and tighten the retaining screws.
10. Replace the fan assembly cover or panel.

Hardware Error Log Entries and Test to Clear Values

Cabinet Sensors Error Log Entries

Error Type	Aux Data	Associated Test	Alarm Level	On/Off Board	Test to Clear Value
0[1]	0	Any	Any	Any	test environment P sh r 1
1	Any	Cabinet Temperature Query Test (#122)	MINOR	ON	test environment P sh r 3
257	Any	Cabinet Temperature Query Test (#122)	MAJOR	ON	test environment P sh r 3

1 Run the Short Test Sequence first. If all tests pass, run the Long Test Sequence. Refer to the appropriate test description and follow the recommended procedures.

System Technician-Demanded Tests: Descriptions and Error Codes

Always investigate tests in the order presented in the table below when inspecting errors in the system. By clearing error codes associated with the *Battery & Battery Charger Query Test*, for example, you may also clear errors generated from other tests in the testing sequence.

Table 10-128. System Technician-Demanded Tests: CABINET

Order of Investigation	Short Test Sequence	Long Test Sequence	D/ND[1]
Battery & Battery Charger Query Test (#5) (a)	X	X	ND
AC Power Query Test (#78) (b)	X	X	ND
Power Unit Query Test (carrier E) (#127) (c)	X	X	ND
Power Unit Query Test (carrier D) (#127) (c)	X	X	ND
Power Unit Query Test (carrier A) (#127) (c)	X	X	ND
Power Unit Query Test (carrier B) (#127) (c)	X	X	ND
Power Unit Query Test (carrier C) (#127) (c)	X	X	ND
Emergency Transfer Query Test (#124) (d)	X	X	ND
Cabinet Temperature Query Test (#122)	X	X	ND
External Alarm Lead Query Test (#120) (e)	X	X	ND
Analog Ring Generator Initialization Test (#117) (f)	X	X	ND
Analog Ring Generator Query Test (#118) (f)	X	X	ND

1 D = Destructive, ND = Non-destructive

Notes:

a. Refer to POWER (Battery & Battery Charger) Maintenance documentation for a description of this test.

b. Refer to AC-POWER (AC-Power) Maintenance documentation for a description of this test.

c. Refer to CARR-POW (Carrier Port Power Unit for AC- and DC-Powered Systems) Maintenance documentation for a description of this test.

d. Refer to EMG-XFER (Emergency Transfer) Maintenance documentation for a description of this test.

e. Refer to EXT-DEV (External Alarm) Maintenance documentation for a description of this test.

f. Refer to RING-GEN (Analog Ring Generator) Maintenance documentation for a description of this test. This test shows up in the test sequence only if there is a TN768 Tone-Clock circuit pack in the port network being tested.

Cabinet Temperature Query Test [for Non-Variable Speed Fans] (#122)

This test queries the Maintenance/Tape Processor in a Standard system PPN, the Duplication Interface circuit pack in a PPN for a High or Critical Reliability system, or the EPN Maintenance circuit pack in an EPN for the status of the cabinet sensors in the cabinet that contains non-variable speed fans.

NOTE:
The descriptions for Error Codes 1 and 2 (FAIL) in the following table are reversed for Generic 1 systems that use a TN731B maintenance circuit pack. That is, Error Code 1 indicates an “over temperature” problem while Error Code 2 indicates and “air flow” problem. If you are servicing a Generic 1 system, be sure to follow the proper service strategy.

Table 10-129. TEST #122 Cabinet Temperature Query Test [Non-Variable Speed Fans]

Error Code	Test Result	Description/Recommendation
1000	ABORT	System resources required to run this test are not available. 1. Retry the command at 1-minute intervals a maximum of 5 times.
2000	ABORT	Response to the test request was not received within the allowable time period. 1. Retry the command at 1-minute intervals a maximum of 5 times. 2. If the test continues to ABORT with Error Code 2000, check for system powering problems with the A carrier (PPN or EPN). Look for and resolve all AC-POWER and CARR-POW alarms in a multicarrier cabinet system or DC-POWER alarms in a single-carrier cabinet system. Then, repeat the test. 3. If the test continues to ABORT with a Error Code 2000, check for and resolve all DUPINT (Duplication Interface) errors in a Duplicated Option PPN, PR-MAINT (Maintenance/Tape Processor) errors in a standard PPN, or MAINT (EPN Maintenance circuit pack) errors in an EPN. Then, repeat the test. 4. If the test continues to ABORT with a Error Code 2000, escalate the problem.
2029	ABORT	Internal System Error. 1. Retry the command at 1-minute intervals a maximum of 5 times.

Continued on next page

Table 10-129. TEST #122 Cabinet Temperature Query Test [Non-Variable Speed Fans] — *Continued*

Error Code	Test Result	Description/Recommendation
1	FAIL	The AHD1 circuit pack has reported an air flow problem. The temperature difference between the air intake and the air exhaust is at least 15^0 C (59 ^{0} F) **and** the absolute temperature at the top of the cabinet is at least 50^0 C (122 ^{0}F) (referred to as the 15^0 C/50^0 C criteria). The fans should be running at high speed. 1. If none of the fans are running, then: a. Look for and resolve all alarms against the CARR-POW (Carrier Port Power Unit). b. Verify -48 volt DC power is available to the fan units. Check the fan unit wiring harness connector. Check that there is 48 volt DC between pins 3, 9, 11 and 2, 8, 10. ■ If there is -48 volt DC power at the connector, there should be power to the fans. If the fans are not running, replace the AHD1. If the fans still do not run, escalate the problem. ■ If there is no -48 volt DC power at the connector, then the current limiter card (982LS) is probably defective. Replace the current limiter card. If the fans still do not run, escalate the problem. 2. If only a few of the fans are not running, replace the defective fans. 3. If all the fans can be started, wait five minutes and rerun the test. If the test fails again, proceed to Step 4 or 5 as applicable.

Continued on next page

Table 10-129. TEST #122 Cabinet Temperature Query Test [Non-Variable Speed Fans] — *Continued*

Error Code	Test Result	Description/Recommendation
1	FAIL *(cont'd.)*	4. If the fans are not at high speed, measure the cabinet temperature at the air intake and the air exhaust at the top of the cabinet. a. If the 15^0 C/50^0 C criteria is met, there is a problem with either the AHD1 circuit pack or the fans that is preventing the fans from operating at high speed. Replace the AHD1 circuit pack and/or the fans. If this succeeds in getting the fans to run at high speed, wait five minutes to give the cabinet time to cool down and, rerun the test. If the problem persists, go to step 5. b. If the 15^0 C/50^0 C criteria is not met, the PR-MAINT (Maintenance/Tape Processor), DUPINT (Duplication Interface) circuit pack, or the EPN MAINT (Maintenance) circuit pack is incorrectly reporting this condition. Look for and resolve all errors on these maintenance objects first, then rerun the test. If the test still fails, escalate the problem. 5. If the fans are running at the high speed, check the items on list that follows. Any on of the items could be restricting or redirecting the flow of air within the cabinet. a. Check both filters. If a filter is dirty or clogged it should be cleaned or replaced. The filters can either be washed with soap and water or vacuumed. b. Make sure there is nothing (other than circuit packs) in the carrier slots that could be restricting the air flow. c. Make sure there are no missing (blank) circuit pack or carrier faceplates. Install and/or replace them as necessary. d. Make sure the cabinet door is properly closed. The door must be closed for the fans to be able to properly cool the cabinet. Wait five minutes to give the fans a chance to cool the cabinet. Rerun the test. If the tests still fails, proceed to Step 6.

Continued on next page

Table 10-129. TEST #122 Cabinet Temperature Query Test [Non-Variable Speed Fans] — *Continued*

Error Code	Test Result	Description/Recommendation
1	FAIL *(cont'd.)*	6. At this point, there should be nothing impeding the air flow, and the fans should be running at high speed. Check the temperatures for the 15^0 C/50^0 C criteria. a. If the 15^0 C/50^0 C criteria exists, a temperature problem exists, and the fans (at high speed) should cool down the cabinet. Wait five minutes and rerun the test. If the test still fails, the ambient room temperature is probably too high, and the room should be cooled. b. If the 15^0 C/50^0 C criteria does not exist, the AHD1 circuit pack, the fans, or the S3 or S4 sensors are defective. Replace these items one at a time (in the order listed). Rerun the test between each replacement. Failures can occur on the Maintenance/Tape Processor, the Duplication Interface, and the EPN Maintenance circuit pack that **are not** detected by the respective maintenance, but that cause many, if not all, environment tests to fail. If many environment tests are failing, the suspect circuit pack, depending on the system configuration, should be replaced and the test rerun. If this does not clear the problem, follow normal escalation procedures.

Continued on next page

Table 10-129. TEST #122 Cabinet Temperature Query Test [Non-Variable Speed Fans] — *Continued*

Error Code	Test Result	Description/Recommendation
2	FAIL	The PR-MAINT (Maintenance/Tape Processor), DUPINT (Duplication Interface) circuit pack, or the EPN MAINT (Maintenance) circuit pack has reported a temperature problem because the S1 sensor has detected a temperature of at least 65^0 C (149^0 F). The entire cabinet is in danger of being powered down if the temperature reaches 70 ^{0}C (158^0 F). 1. If none of the fans are running: a. Look for and resolve all alarms against the CARR-POW (Carrier Port Power Unit). b. Verify that 48 volt DC is available to the fan units. Check the fan unit wiring harness connector. Verify that there is 48 volt DC between pins (3, 9, 11 and 2, 8, 10). ■ If there is 48 volt DC at the connector, there should be power to the fans. If the fans are not running, replace the AHD1. If the fans still do not run, follow normal escalation procedures. ■ If there is not 48 volt DC at the connector, the current limiter card (982LS) is probably defective. Replace the current limiter card. If the fans still do not run, escalate the problem. 2. If only a few of the fans are not running, replace the defective fans. 3. If all the fans can be started, wait five minutes, and rerun the test.If the test fails again, proceed to Step

Continued on next page

Table 10-129. TEST #122 Cabinet Temperature Query Test [Non-Variable Speed Fans] — *Continued*

Error Code	Test Result	Description/Recommendation
2	FAIL *(cont'd.)*	4. Check the temperature at the top of the cabinet. If the temperature is at least 65^0 C (149^0 F), the ambient room temperature is too high, and the fans cannot cool the system. Unless the room temperature is reduced, the system is going to shut down soon. If the temperature is less than 65^0 C, then: 5. The PR-MAINT (Maintenance/Tape Processor), DUPINT (Duplication Interface) circuit pack, or the EPN MAINT (Maintenance) circuit pack may be incorrectly reporting this condition. a. First, look for and resolve all errors on these MOs, then rerun the test. b. If this test fails again, go to Step 6. 6. The sensor S1 may be incorrectly reporting the temperature at the top of the cabinet. Replace sensor S1, and rerun the test. If the test still fails, escalate the problem.
3	FAIL	The AHD1 circuit pack has reported both air flow and temperature problems. Resolve the airflow error first, then, correct the temperature error as described previously.
	PASS	The AHD1 circuit pack has not reported any temperature or air flow problems. The temperatures at the air exhaust at the top of the cabinet and the air intake at the bottom of the cabinet can be measured and the results compared against the criteria described previously. If a problem has been reported, troubleshoot this problem by using the procedures for the "FAIL" cases described previously.

CAP-MEM (Memory Card Capacity)

MO Name (in Alarm Log)	Alarm Level	Initial Command to Run	Full Name of MO
CAP-MEM	MINOR/ WARNING[1]	test card-mem long	Memory Card Capacity

1 Downgrading the MINOR alarm (**set option**) generates the WARNING alarm.

Memory Card Capacity tracks the percentage of translation storage space the memory card uses. When the memory card fills 98% of its translation space, the switch generates an alarm to inform users that they may require a larger system flash card.

Error Log Entries and Test to Clear Values

Table 10-130. Memory Card Capacity Error Log Entries

Error Type	Aux Data	Associated Test	Alarm Level	On/Off Board	Test to Clear Value
1 (a)	112	Memory Card Capacity Test (#1014)	MINOR/ WARNING (b)	OFF	test card-mem long

Notes:

a. The memory card translation storage space is at least 98% full.

b. This alarm has been downgraded (**set option**).

System Technician-Demanded Tests: Descriptions and Error Codes

Investigate errors in the order they appear in the table below.

Order of Investigation	Short Test Sequence	Long Test Sequence	D/ND[1]
Memory Card Insertion Test (#695) (a)	X	X	ND
Memory Card Format and Read Test (#696) (a)	X	X	ND
Memory Card Match Test (#697) (a)	X	X	ND
Memory Card Write-Protected Test (#698) (a)	X	X	ND
Memory Card Directory Recovery Test (#699) (a)	X	X	ND
Memory Card Translation Data Integrity Test (#694) (a)		X	ND
Memory Card Erase/Write/Read Test (#693) (a)		X	ND
Memory Card Capacity Test (#1014)		X	ND

1 D = Destructive; ND = Nondestructive

Notes:

a. Refer to CARD-MEM (Memory Card) Maintenance documentation for a description of this test.

Memory Card Capacity Test (#1014)

This nondestructive test verifies that the memory card is using less than 98% of its translation storage space.

This test runs

- during periodic and schedule maintenance
- on demand (**test card-mem long**, **save translation**).

Table 10-131. TEST #1014 Memory Card Capacity Test

Error Code	Test Result	Description/Recommendation
112	ABORT	Memory Card Translation storage at least 98% full. 1. Inform the user of possible need to upgrade to larger flash card. 2. Replace the memory card with a larger one, or downgrade the alarm to WARNING (**set option**). 3. Rerun the test.
2012 2106 2114	ABORT	Internal System Error 1. Retry the command at 1-minute intervals, up to 5 times.
2013 2100	ABORT	Could not locate the necessary system resources to run this test. 1. Retry the command at 1-minute intervals, up to 5 times
2110	ABORT	Memory card not present. 1. Insert formatted memory card into TN2401/TN794 or TN777B circuit pack slot. 2. Retry the command at 1-minute intervals, up to 5 times.
	PASS	The Memory Card Translation storage is less than 98% full.

CARD-MEM (Memory Card)

MO Name (in Alarm Log)	Alarm Level	Initial Command to Run	Full Name of MO
CARD-MEM	MAJOR[1]		Memory Card
CARD-MEM	MINOR	**test card-mem long**	Memory Card
CARD-MEM	WARNING	**test card-mem sh**	Memory Card

1 The “MAJOR” alarm occurs only at power-up time or on a Reset System 3, 4, or 5 when the switch cannot load all translations from the memory card.

This maintenance object monitors the flash memory of the system. A memory card contains a set of flash EPROM memory devices. The memory card stores data that can remain nonvolatile, even when the power is off. The memory card is on the TN777B Netcon and TN2401/TN794 NetPkt circuit pack to save

- Translations
- Announcements
- Core dumps
  - — Saves maintenance hardware error logs
  - — LMM applies update file to in-core system software.

The memory card does not contain a copy of the system software.

The recommended size of a memory card for each configuration is described in the following table.

Memory Card Size	Usage	File Names
8 Megabyte	With Announcements	translation/announcements
16 Megabyte	DEFINITY Wireless Business System	translation/announcements/ firmware
48 Megabyte	System Upgrade Note: post-G3V8	translation announcements/ core_dump
48 Megabyte	System Upgrade Note: post-G3V8	system_software

NOTE:
Beginning with Release 9, the memory card has no write-protect switch and no equivalent software mechanism.

Software erase and write operations on a memory card take longer as the card usage increases. Replace memory cards that software cannot erase or write to.

Resolving memory card alarms

NOTE:
To avoid corrupting files, remove a memory card only when the yellow "Card-in-use" LED is not glowing.

Follow this list to resolve an alarm on a memory card:

1. Make sure that the "card-in-use" amber LED is out.
2. Remove the memory card from the Processor circuit pack slot.
3. Insert a new, formatted memory card firmly into the Processor circuit pack slot.
4. Verify the new memory card function (**test card-mem**).
5. If the alarm persists, replace the Processor circuit pack.
6. Insert a new, formatted memory card firmly into the new Processor circuit pack slot.
7. Verify the new circuit pack and memory card function (**test network-control long**).
8. If the alarm resolves, store the current system translations and announcements (if applicable) to the memory card (**save translation** and **save announcements**, respectively).

Save Translations Interference

All of the actions used in DEFINITY administration commands are listed in the table below. The command actions that, while active, interfere with daily maintenance are also indicated. They are the **add**, **change**, **duplicate**, **remove**, and **set** commands. These commands are frequently used by customer administrators while performing routine administration of DEFINITY.

Table 10-132. DEFINITY Command Actions

Likely to Disrupt	Less Likely to Disrupt	
add	backup	ping
change	busyout	recycle
duplicate	clear	release
remove	display	reset
set	enable	restore
	get	resume

Continued on next page

Table 10-132. DEFINITY Command Actions — *Continued*

Likely to Disrupt	Less Likely to Disrupt	
	list	save
	mark	status
	monitor	test
	netstat	upgrade

Some other command actions can also interfere with daily maintenance when certain qualifiers are used in the command, or under certain circumstances. For example, certain “test” commands, when used with the modifier “continuously”, could potentially interfere with daily maintenance. However, such command actions are not used typically by customer administrators doing routine administration, and are less likely to disrupt daily maintenance routines than are the **add**, **change**, **duplicate**, **remove**, and **set** command actions.

Incomplete Command Time-out

A time-out feature has been added to the MAINTENANCE-RELATED SYSTEM PARAMETERS form (accessed by the command **change system parameters maintenance**). This feature improves the operation of daily maintenance by allowing maintenance routines to run that might otherwise not run. It also helps to prevent the loss of translations that were not saved by the **save translation** command, and were also not saved because daily maintenance was prevented from running prior to the system reset. Highlights of the feature include:

- Options for blank, 1, 2, 3, 4, 5, or 6 hours (the default is 2 hours)
- The blank option indicates that the feature is not active
- Only commands that block the running of daily maintenance (add, change, duplicate, remove, and set) are affected
- All logins will time-out if any of these commands are active for the prescribed time (except for the “blank” option)
- The feature applies to all logins, regardless of type (init, dadmin, craft, inads) or permissions granted to the specific login ID of an administration or maintenance user
- The corresponding “time-out” entry is appended to the list history log

The new `Command Time-out` field can be viewed by customer administrators. A craft, init, dadmin, or inads login is required to change the option for the field. Screen 10-1 shows the MAINTENANCE-RELATED SYSTEM PARAMETERS screen. Screen 10-2 shows an example of the LIST HISTORY form with the "time-out" entry. The final line indicates that the command **change system-parameters maintenance** was being executed when the time-out period of 2 hours expired.

```
 change system-parameters maintenance                          Page 1  of  4

              MAINTENANCE-RELATED SYSTEM PARAMETERS

OPERATIONS SUPPORT PARAMETERS
          Product Identification: 1000000000
      First OSS Telephone Number: 5551212         Abbrev Alarm Report? y
     Second OSS Telephone Number: 5551213         Abbrev Alarm Report? n
Alarm Origination to OSS Numbers: both
      Cleared Alarm Notification? y              Suspension Threshold: 5
            Restart Notification? y
         Test Remote Access Port? n
      CPE Alarm Activation Level: none

SCHEDULED MAINTENANCE

                      Start Time: 22: 00                    Stop Time: 04: 00
                Daily Maintenance: daily              Save Translation: daily
                                                 Command Time-out (hours): 2
     Control Channel Interchange: no        System Clocks Interchange: no
                 SPE Interchange: no
```

Screen 10-1. Maintenance-Related System Parameters (change system-parameters maintenance)

```
 list history

                              HISTORY


                Date of Loaded Translation: no translation loaded


 Date      Time      Port      Login     Actn    Object      Qualifier


 9/18      16:13     MGR1      init      logn

 9/18      16:13     MGR1      init      logf                TIME-OUT

 9/18      14:13     MGR1      init      cha system-param maintenance
```

Screen 10-2. New "Command Time-out" Entry in the LIST HISTORY Form.

Error Log Entries and Test to Clear Values

Table 10-133. Memory Card Error Log Entries

Error Type	Aux Data	Associated Test	Alarm Level	On/Off Board	Test to Clear Value
0[1]	0	Any	Any	Any	test card-mem
1(a)		Memory Card Insertion Test (#695)	MINOR	OFF	test card-mem
513(b)	Any	Memory Card Match and Read Test (#697)	WARNING	OFF	test card-mem
1025(c)	104 105 106 107 108	Memory Card Dir. Recovery Test (#699)	MINOR	OFF	test card-mem
1281(d)	Any	Memory Card Translation Data Integrity Test (#694)	MINOR	OFF	test card-mem long
1537(e)	104 105 106 107 108	Memory Card Erase/Write/Read Test (#693)	MINOR	OFF	test card-mem long
3329(f)	any	None	MINOR/ MAJOR	OFF	
3841(g)	Any	Save Translation	MINOR	OFF	save translation
3842(h)	Any	Save Translation	MINOR	OFF	save translation
3843(i)	Any	Save Translation	MINOR	OFF	save translation

1 Run the Short Test sequence first. If all tests pass, run the Long Test Sequence. Refer to the appropriate test description and follow the recommended procedures.

a. **Error Type 1**: System detects no memory card in the slot of the TN2401/TN794 NetPkt or TN777B Netcon circuit pack. If memory card is in place, it may have a bad physical connection.

b. **Error Type 513**: Not enough memory to support system operations, or memory card is a system-upgrade memory card, which cannot save translations.

NOTE:
If the memory card is a system-upgrade memory card, then the switch raises on off-board WARNING.

Aux Data:

101 System-upgrade memory card

102 Uses announcement feature, without available announcement file

103 System-upgrade memory card, and uses announcement feature without available announcement file

116 Memory card capacity does not match system configuration

118 Uses announcement feature without available announcement file, and memory card capacity does not match system configuration

132 System translation reaches 98% capacity

134 Uses announcement feature without available announcement file, and system translation reaches 98% capacity

148 Memory card capacity does not match system configuration, and system translation reaches 98% capacity

150 Uses announcement feature without available announcement file, memory card capacity does not match system configuration, and system translation reaches 98% capacity

c. **Error Type 1025**: Maintenance cycle detects broken directory in memory card.

NOTE:
If the maintenance cycle detects a broken directory, then the switch raises an off-board MINOR alarm.

1. Make sure that the “card-in-use” amber LED is not glowing.
2. Remove the memory card from the Processor circuit pack slot.
3. Insert a new memory card firmly into the Processor circuit pack slot.
4. Verify the new memory card function (**test card-mem**).

Aux Data:

104 Memory card directories are corrupt and irrecoverable

105 Cannot write “0” into memory card before an erase operation

106 Cannot erase memory card

107 Cannot write data into a memory card after an erasure

108 Cannot turn on 12-Volt power supply for directory recovery

d. **Error Type 1281**: The memory card can no longer hold the written data, due to corrupt translations file.

   1. Restore translations (**save translation**).
   2. Clear the alarm (**test card-mem long**).
   3. If problem persists, replace the memory card.

e. **Error Type 1537**: The Memory Card Erase/Write/Read Test failed.

   1. Verify that the memory card is present and the write-protect switch is off (**status card-mem**).
   2. Verify that the 12-Volt power supply is functional (**test card-mem**).
   3. Verify the Memory Card Erase/Write/Read Test result (**test card-mem long**).
   4. If the problem persists, replace the memory card.
   5. Resolve the alarm (**test card-mem long**).

   Aux Data: (same as Note c. above)

f. **Error Type 3329**: Switch cannot load translations.

   In a standard system, the alarm invokes Emergency Transfer. Follow the repair procedure for a standard system that appears below.

   NOTE:
   If there are other memory card errors or alarms, resolve them before trying to resolve this alarm.

   1. Resolve all other memory card alarms.
   2. Reset the system (**reset system 3**).
   3. Verify the memory card function (**status card-mem**).
   4. If the problem persists, replace the memory card.
   5. Reset the system (**reset system 3**).

g. **Error Type 3841**: Could not save translations.

   Aux Data:

1	Memory card directory file failed checksum test
3	Too many commands running
4	Command aborted
5	Command collided with a current command
6	Idle software controller
7	Memory card has been erased
8	Memory card has only one good directory
9	All directories are corrupted, and memory card needs reformatting

10 Hard patch file is full

11 Cannot write to memory card due to hardware fault

12 Parameters were out of range due to software fault

13 Command aborted

14 Illegal magic number

15 Trapped driver (when reading the memory card)

16 Memory card is absent

17 Could not find second directory in the memory card

18 Memory card file not available

19 Memory card does not match the system usage

20 Memory card too small for system usage

21 Could not recover broken directory

22 Memory card is system upgrade card

23 Request illegal write

24 Generic software failure

25 Driver timed out

26 Cannot write “0” to the memory card

27 Cannot erase memory card

If the “save translation” operation:	Then the switch:
Fails	Raises an off-board MINOR alarm
Saves into memory	Resolves off-board MINOR alarm

h. **Error Type 3842**: Cannot save translations because the command is still active.

i. **Error Type 3843**: Cannot save translations due to other hardware failures.

   1. Verify the Memory Card Erase/Write/Read Test result (**test card-mem long**).
   2. Resolve other memory card alarms, if any.
   3. When Memory Card Erase/Write/Read Test passes, resolve the error (**save translation**).

System Technician-Demanded Tests: Descriptions and Error Codes

Investigate errors in the order they appear in the table below.

Order of Investigation	Short Test Sequence	Long Test Sequence	Reset Board Sequence	D/ ND[1]
Memory Card Insertion Test (#695)	X	X		ND
Memory Card Format and Read Test (#696)	X	X		ND
Memory Card Match Test (#697)	X	X		ND
Memory Card Directory Recovery Test (#699)	X	X		ND
Memory Card Translation Data Integrity Test (#694)		X		ND
Memory Card Erase/Write/Read Test (#693)		X		ND

1 D = Destructive; ND = Nondestructive

Memory Card Erase/Write/Read Test (#693)

This nondestructive test verifies the erase, write, and read operations. The test also verifies translation file.

This test runs

- during test sequence if **save translation** and **save announcements** operations fail
- on demand (**test card-mem long**).

The test and relevant applications (such as **save translation** and **save announcements**) cannot run at the same time.

Table 10-134. TEST #693 Memory Card Erase/Write/Read Test

Error Code	Test Result	Description/Recommendation
1192	ABORT	Applications are accessing the memory card. 1. Wait 10 minutes for the applications to complete. 2. Retry the command at 1-minute intervals, up to 5 times. 3. If the problem persists, escalate the problem.
2012 2106 2114	ABORT	Internal system error. 1. Retry the command at 1-minute intervals, up to 5 times. 2. If the problem persists, escalate the problem.
2013 2100 none	ABORT	Could not allocate the necessary system resources to run this test. 1. Retry the command at 1-minute intervals, up to 5 times. 2. If the problem persists, escalate the problem.
2110 2111	ABORT ABORT	Memory card not present. Switch does not recognize the memory card. 1. Insert a formatted memory card into the slot at the TN2401/TN794 NetPkt or TN777B Netcon circuit pack. 2. Retry the command at 1-minute intervals, up to 5 times. 3. If the problem persists, escalate the problem.
2112	ABORT	Memory card is a system-upgrade memory card. 1. Replace the inserted memory card with a user's memory card. 2. Retry the command at 1-minute intervals, up to 5 times. 3. If the problem persists, escalate the problem.
2113	ABORT	Memory card has only one directory file. 1. Verify the Memory Card Directory Recovery Test (#699) result (**test card-mem**). 2. If the problem persists, replace the memory card. 3. Retry the command at 1-minute intervals, up to 5 times. 4. If the problem persists, escalate the problem.

Continued on next page

Table 10-134. TEST #693 Memory Card Erase/Write/Read Test — *Continued*

Error Code	Test Result	Description/Recommendation
2115	ABORT	Write-protect switch in “protected” position. 1. Remove the memory card from the Processor circuit pack slot. 2. Push write-protect switch into “not protected” position. 3. Insert the memory card firmly into the Processor circuit pack slot. 4. Retry the command at 1-minute intervals, up to 5 times. 5. If the problem persists, escalate the problem.
2117	ABORT	Translation file not on memory card. 1. Verify that the memory card saves translations (**save translation**). 2. Retry the command at 1-minute intervals, up to 5 times. 3. If the problem persists, escalate the problem.
104	FAIL	Corrupt and irrecoverable directories.
105	FAIL	Cannot write “0” to the memory card.
106	FAIL	Cannot erase memory card.
107	FAIL	Cannot write data into memory card after erasing. 1. Replace the memory card. 2. Retry the command at 1-minute intervals, up to 5 times. 3. If the problem persists, escalate the problem.
110	FAIL	Cannot write to old memory card (pre-g3v9). Card format is post-g3v8. 1. Replace with proper card.
	PASS	The memory card successfully performs the erase, write, and read operations.

Memory Card Translation Data Integrity Test (#694)

This nondestructive test verifies the integrity of the translation file stored in the memory card through comparing checksum values. If the calculated checksum value and the recorded checksum value are different, the translation file is corrupt.

Table 10-135. TEST #694 Memory Card Translation Data Integrity Test

Error Code	Test Result	Description/Recommendation
2012 2106 2114	ABORT	Internal system error 1. Retry the command at 1-minute intervals, up to 5 times. 2. If the problem persists, escalate the problem.
2013 2100 none	ABORT	Could not allocate the necessary system resources to run this test. 1. Retry the command at 1-minute intervals, up to 5 times. 2. If the problem persists, escalate the problem.
2110	ABORT	Memory card not present.
2111	ABORT	Switch does not recognize the memory card. 1. Insert a formatted memory card into the slot at the TN2401/TN794 NetPkt or TN777B Netcon circuit pack. 2. Retry the command at 1-minute intervals, up to 5 times. 3. If the problem persists, escalate the problem.
2112	ABORT	Memory card is a system-upgrade memory card. 1. Replace the inserted memory card with a user's memory card. 2. Retry the command at 1-minute intervals, up to 5 times. 3. If the problem persists, escalate the problem.
Any	FAIL	A checksum error in translation. 1. Verify that the memory card can save translations (**save translation**). 2. Retry the command at 1-minute intervals, up to 5 times. 3. If the problem persists, replace the memory card.
	PASS	There is no checksum error in the translation file.

Memory Card Insertion Test (#695)

This nondestructive test verifies whether

- A memory card is in the memory card slot of the TN2401/TN794 NetPkt or TN777BNetcon circuit pack
- The system can detect the memory card

Table 10-136. TEST #695 Memory Card Insertion Test

Error Code	Test Result	Description/Recommendation
2012 2106 2114	ABORT	Internal system error 1. Retry the command at 1-minute intervals, up to 5 times. 2. If the problem persists, escalate the problem.
2013 2100 none	ABORT	Could not allocate the necessary system resources to run this test. 1. Retry the command at 1-minute intervals, up to 5 times. 2. If the problem persists, escalate the problem.
	FAIL	Memory card is not present or has a bad connection. 1. Verify that the memory card is present or has good connection. 2. Insert the memory card firmly into slot. 3. Verify the memory card function (**test card-mem**). 4. If the problem persists, replace the memory card. 5. Verify the memory card function (**test card-mem**). 6. If the problem still persists, replace the TN2401/TN794 NetPkt or TN777B Netcon circuit pack.
	PASS	Memory card is present, and the system detects it.

Memory Card Format and Read Test (#696)

This is a non-destructive test, which reads the directory file from the memory card, and verifies the integrity of the directory file.

Table 10-137. TEST #696 Memory Card format and Read Test

Error Code	Test Result	Description/Recommendation
2012 2106 2114	ABORT	Internal System Error. 1. Retry the command at one minute intervals a maximum of five times. 2. If the test continues to abort, escalate the problem.
2013 2100 none	ABORT	Could not allocate the necessary system resources to run this test. 1. Retry the command at one minute intervals a maximum of five times. 2. If the test continues to abort, escalate the problem.
2108	ABORT	The NETCON circuit pack is not a TN777B circuit pack. 1. Follow the Standard Repair Procedures for replacing the NETCON circuit pack with the TN777B circuit pack. 2. Re-enter the **test card-mem** command.
2110	ABORT	No memory card is inserted. 1. Insert a formatted memory card into the slot at the TN777B NETCON circuit pack. 2. Retry the command at one minute intervals a maximum of five times. 3. If the test continues to abort, escalate the problem.

Continued on next page

Table 10-137. TEST #696 Memory Card format and Read Test — *Continued*

Error Code	Test Result	Description/Recommendation
2113	ABORT	One of the two directories in the memory card is corrupted. 1. Re-enter the test card-mem command, and verify the Test #699 passes. 2. If the test aborts again with this error code, replace the memory card.
	FAIL	System software cannot recognize the inserted memory card. The memory card is not formatted, or the directories of the memory card are corrupted. 1. Replace the memory card with a new formatted memory card. 2. Retry the command at one minute intervals a maximum of five times. 3. If the test continues to abort, escalate the problem.
	PASS	The system recognizes the inserted memory card, and it can read the directories from the memory card.

Memory Card Match Test (#697)

This nondestructive test verifies the memory card is consistent with the system configuration. The test helps answer the following questions:

If the memory card:	Then the maintenance cycle:
Is a system upgrade memory card	Raises a WARNING alarm
Matches the system configuration capacity	Raises a WARNING alarm
Contains an announcement file for systems with announcement circuit pack	Raises a WARNING alarm
Reaches 98% of its reserved storage space	Raises a WARNING alarm

NOTE:
If maintenance raises a WARNING alarm for these reasons, replace the memory card.

Table 10-138. TEST #697 Memory Card Match Test

Error Code	Test Result	Description/Recommendation
2012 2106 2114	ABORT	Internal system error 1. Retry the command at 1-minute intervals, up to 5 times. 2. If the problem persists, escalate the problem.
2013 2100 none	ABORT	Could not allocate the necessary system resources to run this test. 1. Retry the command at 1-minute intervals, up to 5 times. 2. If the problem persists, escalate the problem.

Continued on next page

Table 10-138. TEST #697 Memory Card Match Test — *Continued*

Error Code	Test Result	Description/Recommendation
2110	ABORT	Memory card is not present.
2111	ABORT	Switch does not recognize the memory card. 1. Insert a formatted memory card into the slot at the TN2401/TN794 NetPkt or TN777B Netcon circuit pack. 2. Retry the command at 1-minute intervals, up to 5 times. 3. If the problem persists, escalate the problem.
101	FAIL	Memory card is a system-upgrade memory card.
102	FAIL	Memory card does not contain an Announcements file (for systems configured with the Announcement feature).
103	FAIL	Memory card is a system-upgrade memory card, and uses announcement feature without available announcement file.
116	FAIL	Memory card capacity does not match system configuration capacity.
118	FAIL	Memory card uses announcement feature without available announcement file, and memory card does not match system configuration.
132	FAIL	System translation reaches 98% of capacity.
134	FAIL	Memory card uses announcement feature without announcement file in memory card, and system translation reaches a 98% capacity.
148	FAIL	Memory card capacity does not match the system configuration, and system translation reaches 98% capacity.
150	FAIL	Memory card uses announcement feature without announcement file in memory card, memory card capacity does not match the system configuration, and system translation reaches 98% capacity. 1. Replace the memory card with a 10 MB memory card. 2. Retry the command at 1-minute intervals, up to 5 times. 3. If the problem persists, escalate the problem.
	PASS	Memory card matches the system configuration, and has enough space for saving translations and announcements (if applicable).

Memory Card Directory Recovery Test (#699)

All memory cards (except system software upgrade memory cards) have two copies of both directory files and translation files. This ensures the memory card has at least one good translation file in at any time, especially during the “save translation” operation. If maintenance detects that one of a pair of files is missing, maintenance can build the file.

This nondestructive test

- Verifies the integrity of active and backup directory files
- Requests directory file rebuild, if necessary

Table 10-139. TEST #699 Memory Card Directory Recovery Test

Error Code	Test Result	Description/Recommendation
1192	ABORT	Applications are accessing the memory card. 1. Wait 10 minutes for the applications to complete. 2. Retry the command at 1-minute intervals, up to 5 times. 3. If the situation persists, escalate the problem.
2012 2106 2114	ABORT	There is an Internal system error. 1. Retry the command at 1-minute intervals, up to 5 times. 2. If the problem persists, escalate the problem.
2013 2100 none	ABORT	Could not allocate the necessary system resources to run this test. 1. Retry the command at 1-minute intervals, up to 5 times. 2. If the problem persists, escalate the problem.
2110 2111	ABORT ABORT	Memory card is not present. Switch does not recognize the memory card. 1. Insert a formatted memory card into the slot at the TN2401/TN794 NetPkt or TN777B Netcon circuit pack. 2. Retry the command at 1-minute intervals, up to 5 times. 3. If the problem persists, escalate the problem.
2112	ABORT	Memory card is a system-upgrade memory card. 1. Replace the inserted memory card with a user’s memory card. 2. Retry the command at 1-minute intervals, up to 5 times. 3. If the problem persists, escalate the problem.

Continued on next page

Table 10-139. TEST #699 Memory Card Directory Recovery Test — *Continued*

Error Code	Test Result	Description/Recommendation
2115	ABORT	The write-protect switch is set to the “protect” position. 1. Remove the memory card. 2. Move the write-protect switch to the “not-protected” position. 3. Re-insert the memory card into the slot. 4. Retry the command at 1-minute intervals, up to 5 times. 5. If the problem persists, escalate the problem.
104	FAIL	Corrupt and irrecoverable directories.
105	FAIL	Cannot write “0” to the memory card.
106	FAIL	Cannot erase memory card.
107	FAIL	Cannot write data into memory card after erasing. 1. Replace the memory card. 2. Retry the command at 1-minute intervals, up to 5 times. 3. If the problem persists, escalate the problem.
110	FAIL	Cannot write to old memory card (pre-g3v9). Card format is post-g3v8. 1. Replace with proper card.
	PASS	Memory card directory files are sane.

CARR-POW (Carrier Port Power Unit) for AC-Powered Systems

MO Name (in Alarm Log)	Alarm Level	Initial Command to Run[1]	Full Name of MO
CARR-POW	MAJOR	recycle carrier PC	Carrier Port Power Unit

1 Recycle the carrier indicated by the PORT field in the Alarm Log.

DEFINITY Generic 1 offers two basic cabinet type configurations: (1) the multicarrier cabinet system and (2) the single-carrier cabinet system. Both cabinet system configurations may be powered by either an external AC or DC power source.

NOTE:
For environment maintenance, the aspects of a PPN configuration for a High or Critical Reliability system or of an EPN cabinet configuration are irrelevant.

The environment maintenance strategy to be used depends on both the cabinet configuration and the type of powering. Therefore, refer to the following list to find the appropriate MO section(s).

- For a single-carrier cabinet system, refer to the “DC-POWER” Maintenance documentation for environment maintenance strategy.
- For a multicarrier cabinet system using an external AC power source, refer to one or more of the following Maintenance documentation sections: “AC-POWER”, “CUST-ALM (Customer-Provided Alarming Device)”, or “POWER (Battery & Battery Charger) for AC-Powered Systems”.
- For a multicarrier cabinet system using an external DC power source, refer to one or more of the following Maintenance documentation sections: “AC-POWER (AC Power) for DC-Powered Systems”, “CUST-ALM (Customer-Provided Alarming Device)”, or “POWER (Battery & Battery Charger) for DC-Powered Systems”.

Every carrier in the system must be supplied with +5 volt, -48 volt, and -5 volt DC power for the various circuit packs to operate properly. This power is supplied to the carriers as follows: AC from a wall outlet comes into the PDU, which distributes the power via a set of fuses (F1 to F7) to the power units. Each carrier in the system is equipped with two power units: the 631 DA AC power unit and the 631 DB AC power unit, which together supply the required voltages to the carrier. Figure 10-12 illustrates the position of the power unit and the power distribution unit (PDU) and shows which power unit each fuse controls (Figure 10-12 also shows other Environment maintenance-related items that can be ignored for this section on Carrier Port Power Unit). Figure 10-13 illustrates the position of the power unit and the PDU and shows which power unit each fuse controls in a small cabinet (from a System 75 R1V3 upgrade). Figure 10-14 shows the position of the

fuses on the PDU and describes how to replace a fuse. The TN2036 Voltage Range circuit pack provides easy access for testing the various voltages on the backplane pins. For more information, refer to the “Troubleshooting Backplane Voltage Problems” section found in Chapter 5, “Routine Maintenance Procedures”.

The power unit has two LEDs: if the yellow LED is lit it means the power unit is operating as normal; if the red LED is lit it means the power unit has a fault; and if neither is lit it LED means no external power is being supplied. The CARR-POW (Carrier Port Power Unit) MO represents the pair of power units that power each carrier in a multicarrier cabinet system. If a problem is reported by hardware for a power unit on a port carrier, the system can recycle the pair of power units in a port carrier; however, if the problem is reported on a control carrier, the system cannot recycle the pair of power units in a control carrier. In a standard multicarrier cabinet (PPN or EPN) carrier A is the control carrier, and carriers B, C, D, and E are the port carriers. In a High or Critical Reliability system multicarrier cabinet (PPN or EPN), carriers A and B are the control carriers, and carriers C, D, and E are the port carriers. However, carrier B can be recycled only if the Active Expansion Interface Link and Active Tone-Clock circuit pack are in the A carrier.

Loss of the 631 DB Carrier Port DC Power Unit in the active control carrier (the A carrier for a standard system and either the A or B carrier for a High or Critical Reliability system) causes loss of the administration terminal. In a High or Critical Reliability system, the Active SPE should switch to the Standby SPE if there is a CARR-POW alarm.

Recycling a carrier turns off the pair of power units, and turns them back on two seconds later.

WARNING:
Recycling carriers disrupts service for all circuit packs on the carrier.

The DEFINITY Generic 1 can also support neon message waiting lamps on analog telephones. If this is required, then the carrier(s) that contains the TN769 Analog Neon circuit packs must also be supplied with 165 volt to power the neon lights. The 165 volt can only be supplied by a TN752 or a TN755B power unit circuit pack.

The following table lists all power unit and power-related circuit packs for the system and indicates the voltages they can supply. Figure 10-12 through Figure 10-17 show a schematic of each power unit type. The TN2036 Voltage Range circuit pack provides easy access for testing the various voltages on the backplane pins. Refer to Chapter 2 in *DEFINITY Communications System Generic 1 and Generic 3 Installation and Test*, 555-230-104.

Table 10-140. DEFINITY power supplies

Power Supply	Output voltages				Cabinet Position
	+5	-48V	-5V	165V	
631 WA	yes	no	no	no	Left
631 WB	no	yes	no	no	Right
631 AR	yes	no	no	no	Left
631 BR	no	yes	no	no	Right
631 DA	yes	no	no	no	Left
631 DB	no	yes	yes	no	Right
TN736	no	no	yes	no	Port slot
TN752	no	no	yes	yes	Port slot
TN755B	no	no	no	yes	Port slot
1217A	yes	yes	yes	?	Right

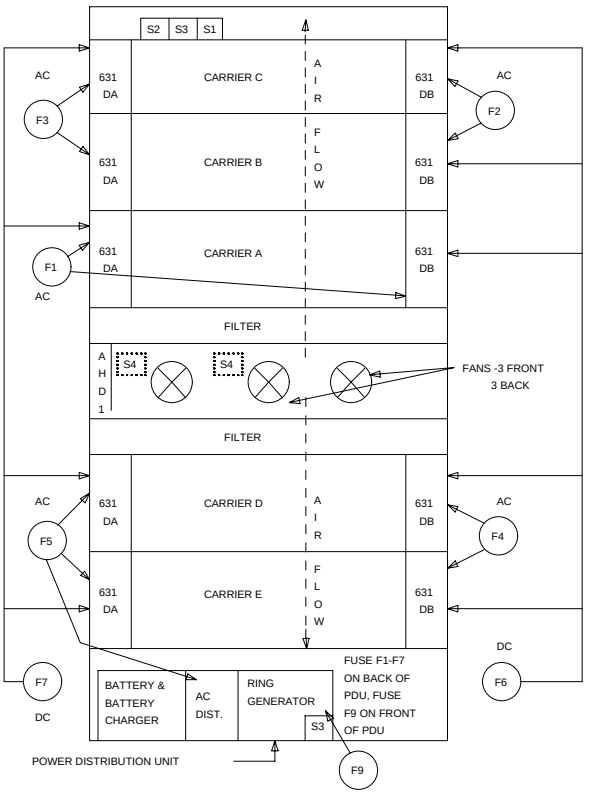

Figure 10-12. Multicarrier Cabinet Environment Components (CARR-POW)

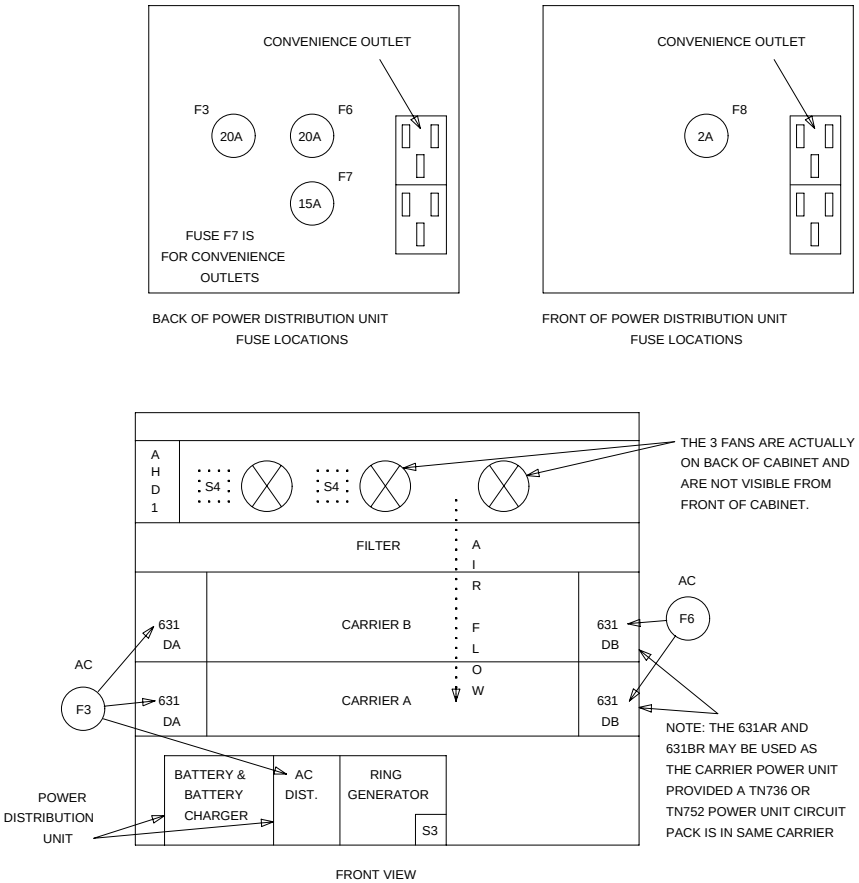

Figure 10-13. Small Cabinet Environment Components (CARR-POW)

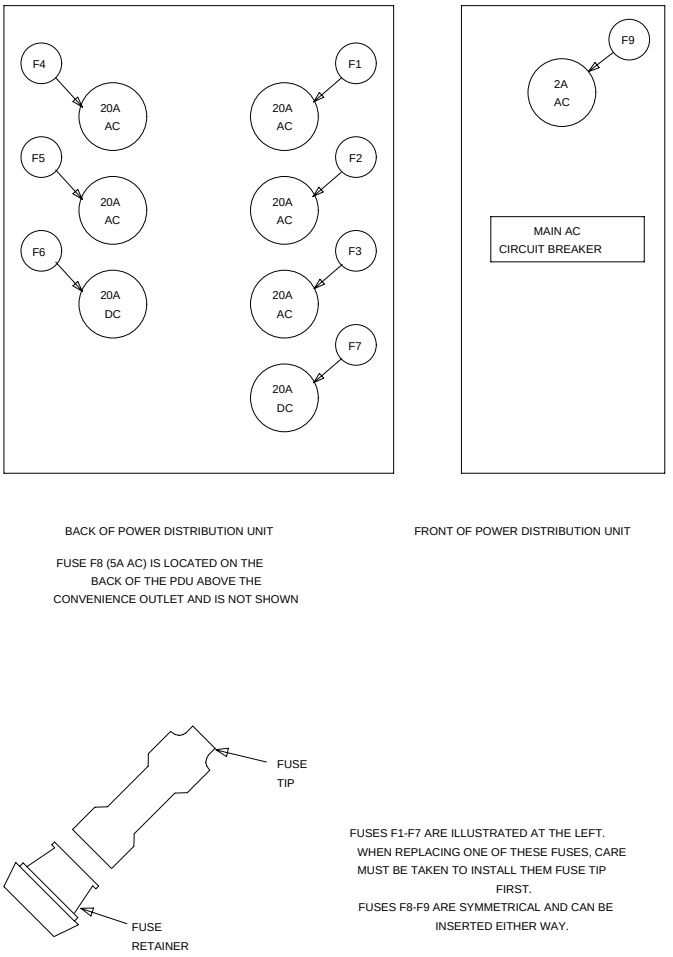

Figure 10-14. Multicarrier Cabinet Fuse Location and Replacement

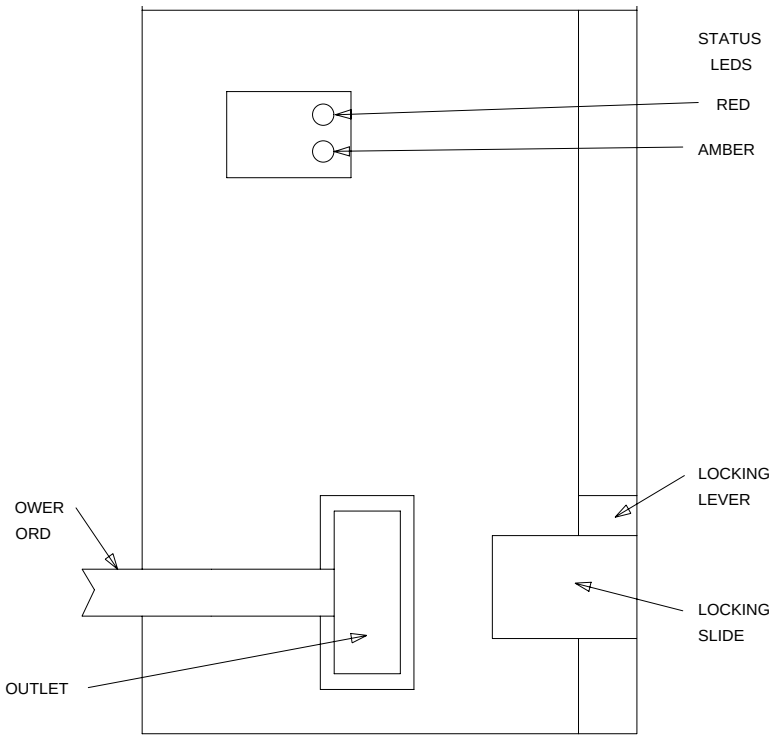

Figure 10-15. 631WA or 631WB AC Power Unit

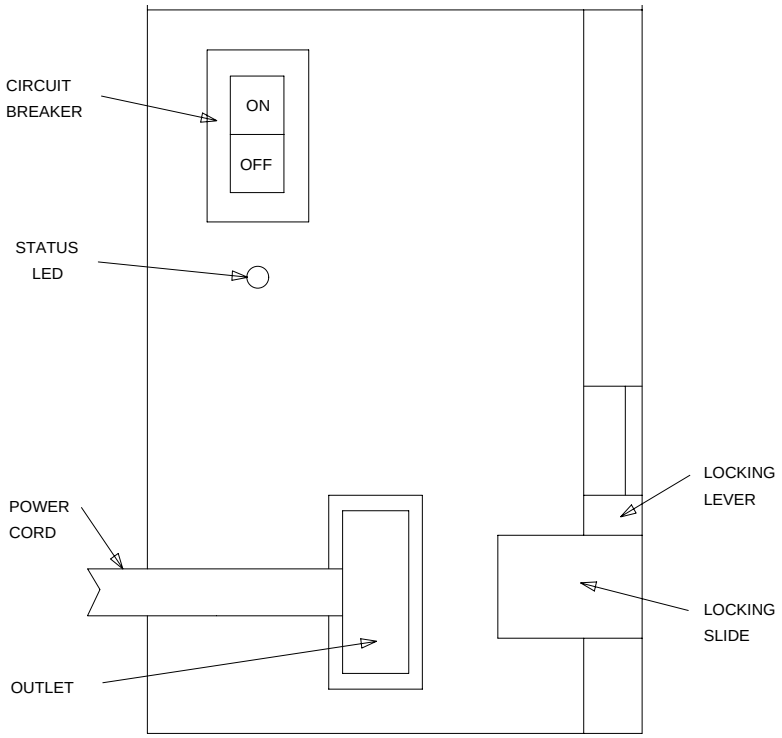

Figure 10-16. 631AR or 631BR AC Power Unit

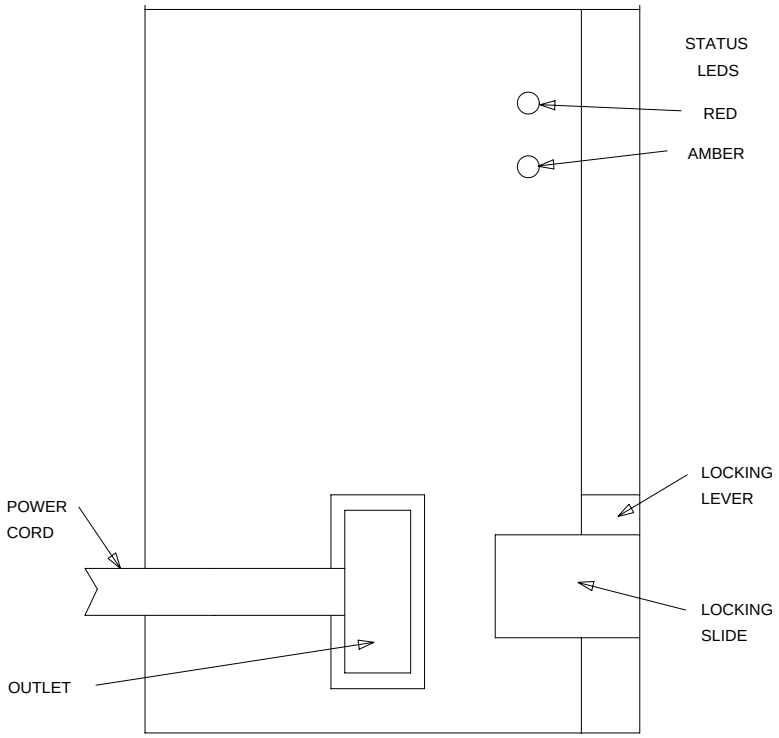

Figure 10-17. 631DA or 631DB AC Power Unit

Power Unit Replacement Procedures

If the power unit to be replaced is in a control carrier of a PPN system, refer to "Replacing power supplies and fans" in Chapter 5, "Routine Maintenance Procedures" before replacing the power unit.

1. Set the power switch to OFF, and unplug the power cord.
2. Move the locking slide on the power unit to its leftmost position and unlatch the locking lever.
3. Remove the power unit from the carrier.

4. Before installing the replacement power unit in the carrier, turn the power unit on its side and operate rocker switches 1 through 4 on the dip switch as follows:

Switch	631AR Position	631BR Position
1	open	open
2	closed	closed
3	open	open
4	closed	open

NOTE:
In the open position, the rocker is down on the side opposite the number. In the closed position, the rocker is down on the side adjacent to the number.

5. Move the locking slide on the replacement power unit to the extreme left position and open the locking lever.
6. Insert the power unit into the carrier until some resistance is felt.
7. Lift the locking lever upward until it latches.
8. Move the locking lever slide on the power unit to the extreme right position.
9. Connect the power cord and set the power switch to ON.

Replacing a 631DA or 631DB AC Power Unit

If the power unit to be replaced is in a control carrier of a PPN system, refer to “Removing Power” and “Restoring Power” in Chapter 5, “Routine Maintenance Procedures” before replacing the power unit. To replace the power unit, follow the procedure below:

1. Unplug the power cord.
2. Move the locking slide on the power unit to the extreme left position and unlatch the locking lever.
3. Remove the power unit from the carrier.
4. Move the locking slide on the replacement power unit to the extreme left position and open the locking lever.
5. Insert the power unit into the carrier until some resistance is felt.
6. Lift the locking lever upward until it latches.
7. Move the locking lever slide on the power unit to the extreme right position.
8. Connect the power cord and set the power switch to ON.

Replacing a TN736 or TN752 Power Unit Circuit Pack

If the TN736 or TN752 power unit circuit pack is in a control carrier of a PPN system, then refer to the ''Handling Control Circuit Packs'' section in Chapter 5, ''Routine Maintenance Procedures''. Replacing either power unit interrupts the -5 volt supply to the carrier. This causes all the analog circuit packs in the carrier to fail their Loop Around Tests and may cause failures in circuit packs in the control complex. After the power unit has been replaced, look for alarms against these maintenance objects. If ANL-LINE alarms exist, refer to Test #47 (Loop Around and Conference Test) in ANL-LINE Maintenance documentation. For CO-TRK alarms, refer to Test #33 (Loop Around and Conference Test) in CO-TRK Maintenance documentation.

Hardware Error Log Entries and Test to Clear Values

Carrier Port Power Unit Error Log Entries

Error Type	Aux Data	Associated Test	Alarm Level	On/Off Board	Test to Clear Value
0[1]	0	Any	Any	Any	test environment P sh r 1
1(a)(b)	0 or 1	Power Unit Query Test (#127)	MAJOR	ON	test environment P r 2

1 Run the Short Test Sequence first. If all tests pass, run the Long Test Sequence. Refer to the appropriate test description and follow the recommended procedures.

Notes:

a. Where P is an appropriate port network number taken for the PORT field of the Error Log.

b. Run the Power Unit Query Test (#127) first using the **test environment P r 2** command. Then, if a carrier must be recycled to clear the CARR-POW alarm, use the **recycle carrier PC** command to run the Power Unit Recycle Test (#126). The Power Unit Recycle Test (#126) is not included in either the long or Short Test Sequences.

WARNING:
The Power Unit Recycle Test (#126) is destructive. For more information, refer to the description of this test.

System Technician-Demanded Tests: Descriptions and Error Codes

Always investigate tests in the order presented in the table below when inspecting errors in the system. By clearing error codes associated with the *Battery & Battery Charger Query Test*, for example, you may also clear errors generated from other tests in the testing sequence.

Order of Investigation	Short Test Sequence	Long Test Sequence	D/ND[1]
Battery & Battery Charger Query Test (#5) (a)	X	X	ND
AC Power Query Test (#78) (b)	X	X	ND
Power Unit Query Test (carrier E) (#127)	X	X	ND
Power Unit Query Test (carrier D) (#127)	X	X	ND
Power Unit Query Test (carrier A) (#127)	X	X	ND
Power Unit Query Test (carrier B) (#127)	X	X	ND
Power Unit Query Test (carrier C) (#127)	X	X	ND
Emergency Transfer Query Test (#124) (c)	X	X	ND
Cabinet Temperature Query Test (#122) (d)	X	X	ND
External Alarm Lead Query Test (#120) (e)	X	X	ND
Analog Ring Generator Initialization Test (#117) (f)	X	X	ND
Analog Ring Generator Query Test (#118) (f)	X	X	ND

1 D = Destructive; ND = Nondestructive

Notes:

a. Refer to POWER (Battery & Battery Charger) Maintenance documentation for a description of this test.

b. Refer to AC-POWER (AC Power) Maintenance documentation for a description of this test.

c. Refer to EMG-XFER (Emergency Transfer) Maintenance documentation for a description of this test.

d. Refer to CABINET (Cabinet Sensors) Maintenance documentation for a description of this test.

e. Refer to EXT-DEV (External Alarm) Maintenance documentation for a description of this test.

f. Refer to RING-GEN (Analog Ring Generator) Maintenance documentation for a description of this test. This test only shows up in the test sequence if there is a TN768 Tone-Clock circuit pack in the port network being tested.

Power Unit Recycle Test (#126)

This test is destructive.

This test is destructive because it requires all circuit packs in the recycled carrier to be removed and inserted. These actions cause all calls originating or terminating on circuit packs in this carrier to be dropped. The pair of power units in the specified carrier is recycled. Both power units in the carrier are turned off for two seconds and then back on again. After the power units have been turned back on, the test queries the Maintenance/Tape Processor in Standard system PPN, the Duplication Interface circuit pack in a PPN for a system with High or Critical Reliability, or the EPN Maintenance circuit pack in an EPN multicarrier cabinet system for the status of pair of power units in the specified carrier. If both power units are on and functioning, then the test passes. If both power units are not on and functioning, the test fails, and BOTH power units are turned off.

Table 10-141. TEST #126 Power Unit Recycle Test

Error Code	Test Result	Description/Recommendation
1000	ABORT	System resources required to run this test are not available. 1. Retry the command at 1-minute intervals a maximum of 5 times. 2. If the test continues to abort, escalate the problem.
1129	ABORT	Only occurs when recycling carrier 2B. Indicates that the Active Tone-Clock for the EPN is in carrier 2B. 1. Issue the **set tone-clock 2A** command. 2. Rerun the test.
1130	ABORT	Only occurs when recycling carrier 2B. Indicates that the Active Expansion Interface Link for the EPN is in carrier 2B. 1. Issue the **set expansion-link A01** command. 2. Rerun the test.

Continued on next page

Table 10-141. TEST #126 Power Unit Recycle Test — *Continued*

Error Code	Test Result	Description/Recommendation
2000	ABORT	Response to the test request was not received within the allowable time period.
2029	ABORT	Internal System Error. 1. Retry the command at 1-minute intervals a maximum of 5 times.
1 (Carrier E) 2 (Carrier D) 4 (Carrier A) 8 (Carrier B) 16 (Carrier C)	FAIL	There is a problem with one or both Power Unit(s) on the recycled carrier. 1. Since the Power Unit Recycle Test failed, both Power Units in the recycled carrier should have been powered off by the system software. Both power units should be showing a red status LED, instead of a green one. Since the Power Unit Query Test is a subset of the Power Unit Recycle Test, the Power Unit Query Test (#127) should also fail. Run the Power Unit Query Test by using the **test environment P** command where P is the appropriate port network number. 2. If the test fails, follow the repair procedures described for Test #127. If problem persists, follow normal escalation procedures.
	PASS	Both power units in the recycled carrier were found to be healthy by the Maintenance/Tape Processor in a Standard system PPN, the Duplication Interface circuit pack in a PPN for a system with High or Critical Reliability, or the EPN Maintenance circuit pack in an EPN multicarrier cabinet system after the power units were powered down and back up. If the status LEDs on both power units are not showing green, then the PR-MAINT (Maintenance/Tape Processor), DUPINT (Duplication Interface) circuit pack, or the EPN MAINT (Maintenance) circuit pack may have incorrectly reported the state of the power units. Look for and resolve any alarms on these MOs.

Power Unit Query Test (#127)

This test queries the Maintenance/Tape Processor in a Standard system PPN, the Duplication Interface circuit pack in a PPN for a system with High or Critical Reliability, or the EPN Maintenance circuit pack in an EPN multicarrier cabinet system for the status of pair of power units in the specified carrier. If both power units are on and functioning, then the test passes. If both are not on and functioning, it fails.

Table 10-142. TEST #127 Power Unit Query Test

Error Code	Test Result	Description/Recommendation
1000	ABORT	System resources required to run this test are not available. 1. Retry the command at one minute intervals a maximum of 5 times.
2000	ABORT	Response to the test request was not received within the allowable time period. 1. Retry the command at 1-minute intervals a maximum of 5 times. 2. If the test continues to ABORT with error code 2000, check for system powering problems with the A carrier (PPN or EPN). Look for and resolve all AC-POWER and CARR-POW alarms in a multicarrier cabinet system or DC-POWER alarms in a single-carrier cabinet system. Then, repeat the test. 3. If the test continues to ABORT with a 2000 error code, check for and resolve all DUPINT (Duplication Interface) errors in a Duplicated Option PPN, PR-MAINT (Maintenance/Tape Processor) errors in a standard PPN, or MAINT (EPN Maintenance circuit pack) errors in an EPN. Then, repeat the test. 4. If the test continues to ABORT with a 2000 error code, escalate the problem.
2029	ABORT	Internal System Error. 1. Retry the command at 1-minute intervals a maximum of 5 times.

Continued on next page

Table 10-142. TEST #127 Power Unit Query Test — *Continued*

Error Code	Test Result	Description/Recommendation
	FAIL	There is a problem with one or both power units on the tested carrier. 1. For each power unit that has all status LEDs OFF, check the AC input to the power unit at the power unit outlet (see Figure 10-12 and Figure 10-13). If there is no AC, then check the appropriate fuses (see Figure 10-14) for the affected power unit. If the fuses are blown out, replace the fuses (see). If the fuses blow out again or AC does not show up at the power unit outlet, then there is probably a power wiring problem in the cabinet. Follow normal escalation procedures. 2. At this point AC should be present at the power unit outlet. If the carrier being tested is the 1A or 2A carrier or the 1B carrier in a High or Critical Reliability system, refer to “Troubleshooting Control Carrier Power Units” in Chapter 5, “Routine Maintenance Procedures”. Otherwise, use the **recycle carrier PC** command (where PC is the appropriate port network and carrier) in an attempt to bring back the power units for this carrier. If the test passes, the trouble is cleared. If the test does not pass, one power unit, or both, in the tested carrier is defective. If only one power unit is defective, the status LEDs on the healthy power unit light green for a moment. When the recycle test determines that both power units are defective, the software turns off power to both the good and defective power units. This causes the status LED(s) on the good power unit to light red. 3. Unplug both power units, and wait about one minute to allow the power units to cool down. Plug in the power units. If either power unit is operating properly (that is, the status LEDs show green), then replace the defective power unit(s). See “Power Unit Replacement Procedures” in this section.

Continued on next page

Table 10-142. TEST #127 Power Unit Query Test — *Continued*

Error Code	Test Result	Description/Recommendation
	FAIL *(cont'd.)*	4. If the replaced power unit still does not operate properly, then a circuit pack or a defective telephone connected to a circuit pack in the affected carrier may be causing an electrical load which is preventing the power unit from operating properly. Unseat all the circuit packs in the carrier and reissue the **recycle carrier** command. a. If the recycle passes, then the power units are healthy, and the problem is with one of the circuit packs. Reinsert the circuit packs one at a time. If the status LED shows red after reinserting a circuit pack, replace the defective circuit pack. If the status LED still shows red, remove the Amphenol. connector on the back of the slot containing this circuit pack and reissue the **recycle carrier** command. If the status LED shows green, the problem is with one of the telephones or the wiring to one of the telephones on this slot. If the status LED still shows red, escalate the problem. b. If either power unit still shows a red status LED, check for bent pins and cable placement in the affected carrier. There are failures that can occur on the Maintenance/Tape Processor, Duplication Interface, and EPN Maintenance circuit pack that **are not** detected by the respective maintenance, but that cause many, if not all, environment tests to fail. If many environment tests are failing, the suspect circuit pack, depending on the system configuration, should be replaced and the test rerun. If no other problems can be found, escalate the problem.
	PASS	Both power units in the tested carrier were found to be healthy by the Maintenance/Tape Processor in Standard system PPN, the Duplication Interface circuit pack in a PPN for a system with High or Critical Reliability, or the EPN Maintenance circuit pack in an EPN multicarrier cabinet system. If the status LEDs on both power units are not showing green, the PR-MAINT (Maintenance/Tape Processor), DUPINT (Duplication Interface) circuit pack, or the EPN MAINT (Maintenance) circuit pack may have incorrectly reported the state of the power units. Look for and resolve any alarms on these MOs.

CARR-POW (Carrier Port Power Unit) for DC-Powered Systems

MO Name (in Alarm Log)	Alarm Level	Initial Command to Run[1]	Full Name of MO
CARR-POW	MAJOR	recycle carrier PC	Carrier Port Power Unit

1 Recycle the carrier indicated by the Port field in the Alarm Log.

Generic 1 offers two basic cabinet type configurations: (1) the multicarrier cabinet system and (2) the single-carrier cabinet system. Both cabinet system configurations may be powered by either an external AC or DC power source.

NOTE:
For environment maintenance, the PPN or EPN cabinet configuration aspects for a High or Critical Reliability system are irrelevant.

The environment maintenance strategy to be used depends on both the cabinet configuration and the type of powering. Therefore, refer to the following list to find the appropriate MO section(s).

- For a single-carrier cabinet system, refer to the “DC-POWER (Single-Carrier Cabinet Power)” Maintenance documentation for environment maintenance strategy.
- For a multicarrier cabinet system using an external AC power source, refer to one or more of the following Maintenance documentation sections: “AC-POWER (AC Power) for AC-Powered Systems”, “CUST-ALM (Customer-Provided Alarming Device)”, or “POWER (Battery & Battery Charger) for AC-Powered Systems”.
- For a multicarrier cabinet system using an external DC power source, refer to one or more of the following Maintenance documentation sections: “AC-POWER (AC Power) for DC-Powered Systems”, “CUST-ALM (Customer-Provided Alarming Device)”, or “POWER (Battery & Battery Charger) for DC-Powered Systems”.

Every carrier in the system must be supplied with +5 volt, -48 volt, and -5 volt DC power for the various circuit packs to operate properly. A multicarrier system can be supplied by an external AC power source or an external DC power source.

In a DC-powered system, power is supplied to the carriers as follows: DC power from an external device comes into Power Distribution Units (PDU J58890CF and PDU J58890CF-1), which distribute the power via circuit breakers (CB1-CB12 for PDU J58890CF, CB1-CB6 for J58890Cf-1) to the carrier power units. Each carrier in the system is equipped with two power units, the 644A and the 645B, which together supply the required voltages to the carrier. Figure 10-17 illustrates the position of the carrier power units and PDU J58890CF and shows which power unit each circuit breaker controls (Figure 10-17 also shows other Environment

maintenance-related items that can be ignored for this section on Carrier Port Power Unit). Figure 10-18 shows the position of the circuit breakers on the PDU J58890CF. Figure 10-19 illustrates the position of the carrier power units and PDU J58890CF-1 and shows which power unit each circuit breaker controls (Figure 10-19 also shows other Environment maintenance-related items that can be ignored for this section on Carrier Port Power Unit). Figure 10-20 shows the position of the circuit breakers on the PDU J58890CF-1. The TN2036 Voltage Range circuit pack provides easy access for testing the various voltages on the backplane pins. Refer to Chapter 2 in *DEFINITY Communications System Generic 1 and Generic 3 Installation and Test,* 555-230-104. The CARR-POW (Carrier Port Power Unit) MO represents the pair of power units for each carrier in a multicarrier cabinet system. If a problem is reported by hardware for a power unit on a port carrier, the system can recycle the pair of power units in a port carrier; however, if the problem is reported on a control carrier, the system cannot recycle the pair of power units in a control carrier. In a standard multicarrier cabinet (PPN or EPN), carrier A is the control carrier, and carriers B, C, D, and E are the port carriers. In a High or Critical Reliability system multicarrier cabinet (PPN or EPN), carriers A and B are the control carriers, and carriers C, D, and E are the port carriers. However, carrier B in the EPN can be recycled only if the Active Expansion Interface Link and Active Tone-Clock circuit pack are in the A carrier.

The carrier port power unit has one LED: the yellow LED on means operating as normal and the LED off means no external power is being supplied or that the power unit has a fault.

Loss of the 645B Carrier Port Power Unit in the active control carrier (the A carrier for a standard system and either the A or B carrier for a High or Critical Reliability system) causes loss of the administration terminal. In a High or Critical Reliability system, the Active SPE should switch to the Standby SPE if there is a CARR-POW alarm.

Recycling a carrier turns off the pair of carrier power units and turns them back on two seconds later.

WARNING:
Recycling carriers disrupts service for all circuit packs on the carrier.

Generic 1 can also support neon message waiting lamps on analog telephones. If this is required, then the carrier(s) that contains the TN769 Analog Neon circuit packs must also be supplied with 165 volt DC power to power the neon lights. The 165 volt DC power can only be supplied by a TN752 or a TN755B power unit circuit pack. The following table lists the power units and power-related circuit packs that can be used in a DC-powered system and indicates the voltages they can supply. Figure 10-21 on page 10-382 and Figure 10-22 on page 10-383 show a schematic of the 644A and 645B power supplies, respectively. The TN2036 Voltage Range circuit pack provides easy access for testing the various voltages on the backplane pins.

Power Supply	+5V	-48V	-5V	165V	Cabinet Position
644A	yes	no	no	no	Left Side
645B	no	yes	yes	no	Right Side
TN736	no	no	yes	no	-
TN752	no	no	yes	yes	-
TN755B	no	no	no	yes	-

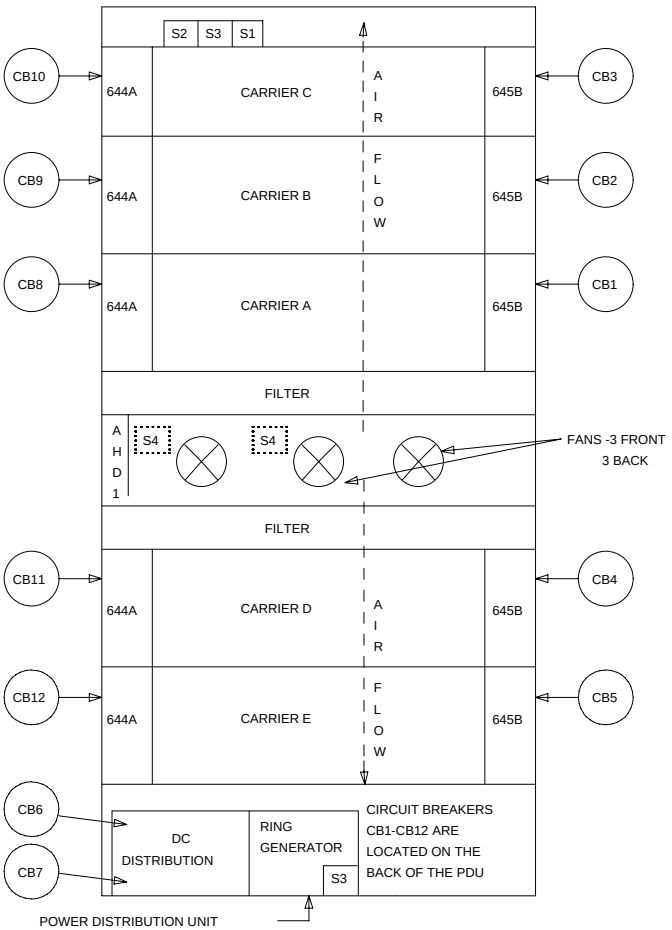

Figure 10-18. Power Distribution Unit for DC-Powered Systems (PDU8890CF)

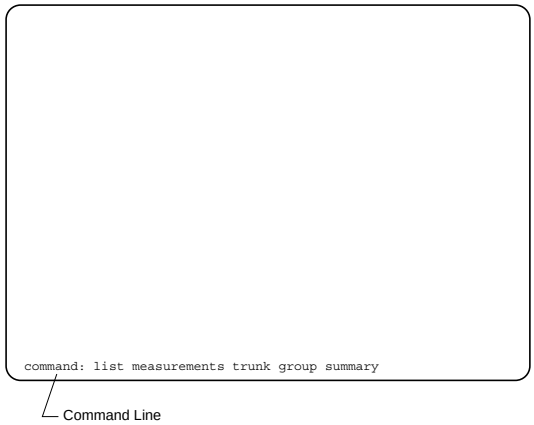

Figure 10-19. Power Distribution Unit for DC-Powered Systems (PDU 58890CF)

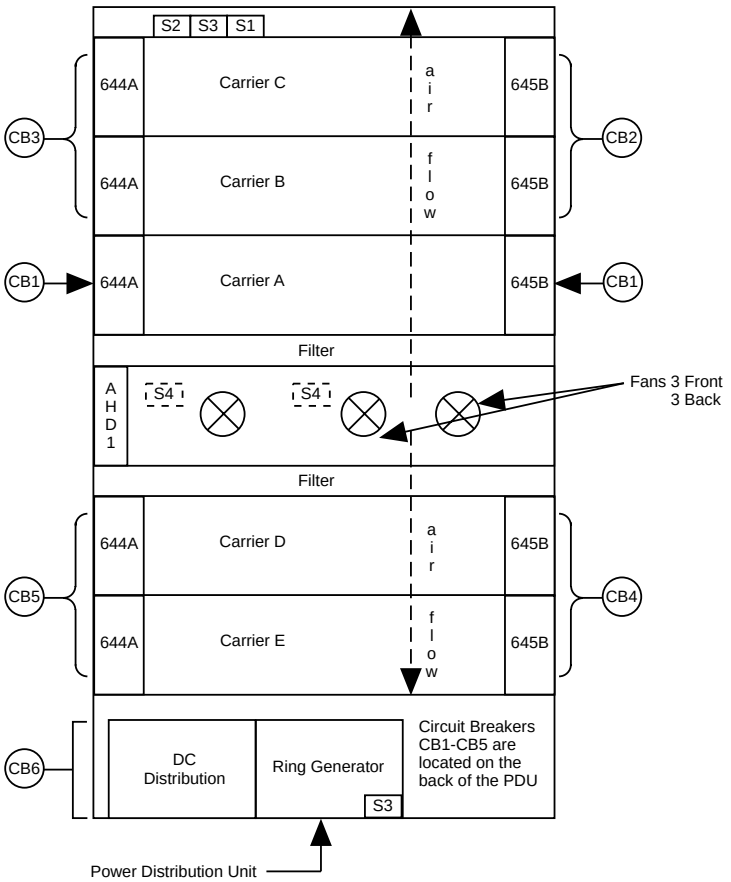

Figure 10-20. Power Distribution Unit for DC-Powered Systems (PDU8890CF-1)

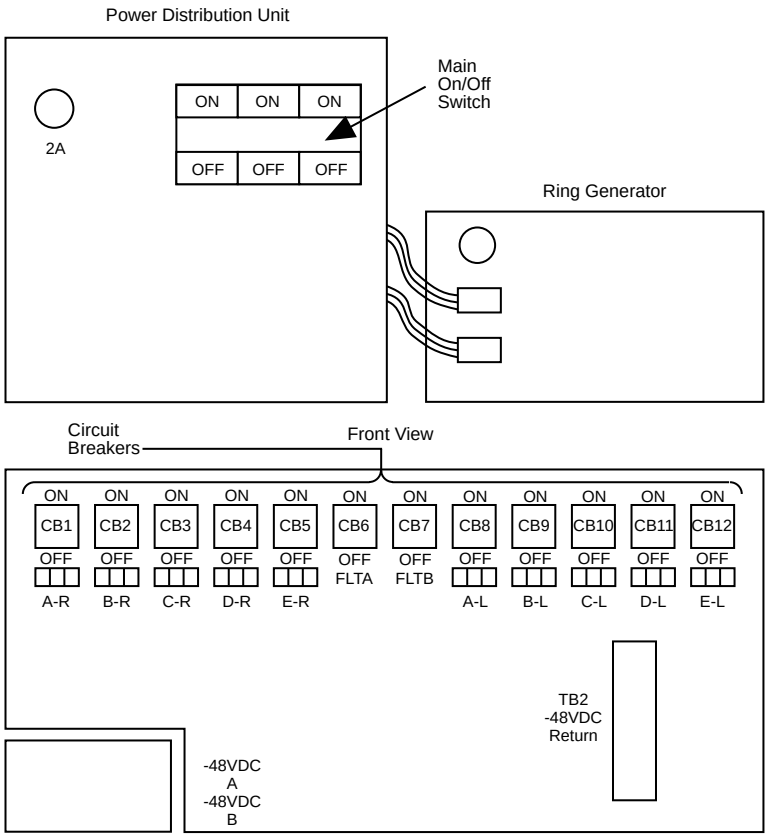

Figure 10-21. Power Distribution Unit for DC-Powered Systems (PDU 58890CF-1)

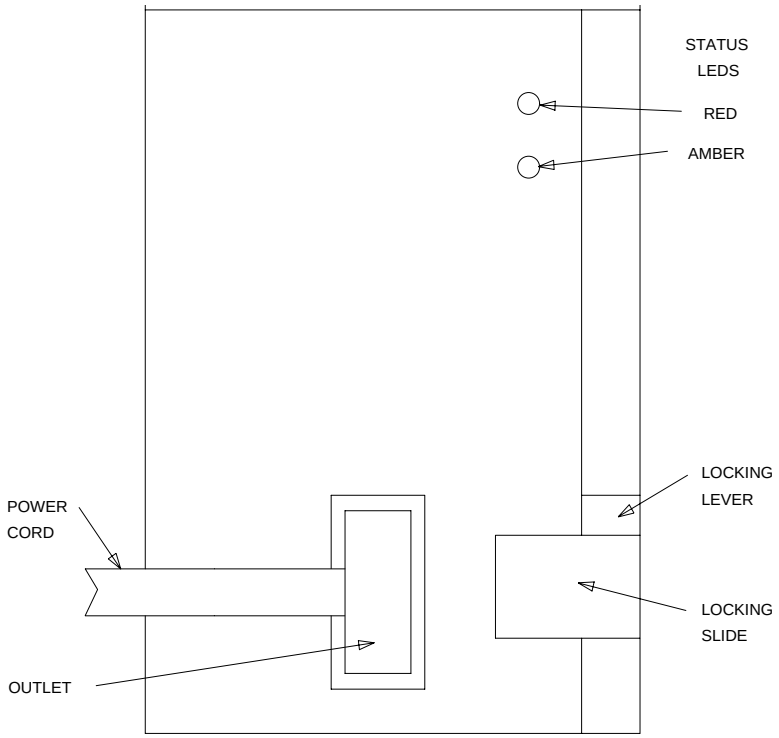

Figure 10-22. 644A Port Carrier Power Unit for DC-Powered Systems

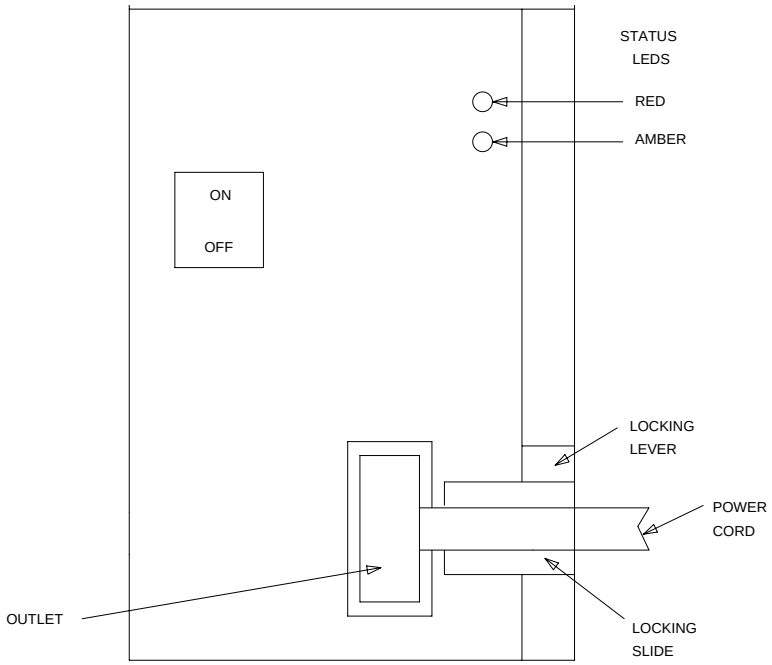

Figure 10-23. 645B Port Carrier Power Unit for DC-Powered Systems

Port Carrier Power Unit Replacement Procedures

The procedures for replacing a 644A or 645B carrier DC power unit are given below.

If the port carrier power unit to be replaced is in a control carrier of a PPN system, refer to the “Removing Power” and “Restoring Power” sections in Chapter 5, “Routine Maintenance Procedures” before replacing the port carrier power unit. To replace the port carrier power unit, follow the procedure below:

1. If this is a 645B power unit, set the power switch to OFF.
2. Unplug the power cord.
3. Move the locking slide on the power unit to the extreme left position, and unlatch the locking lever.
4. Remove the power unit from the carrier.
5. Move the locking slide on the replacement power unit to the extreme left position and open the locking lever.
6. Insert the power unit into the carrier until some resistance is felt.

7. Lift the locking lever upward until it latches.
8. Move the locking lever slide on the power unit to the extreme right position.
9. Connect the power cord.
10. If this is a 645B power unit, set the power switch to ON.

Hardware Error Log Entries and Test to Clear Values

Carrier Port Power Unit Error Log Entries

Error Type	Aux Data	Associated Test	Alarm Level	On/Off Board	Test to Clear Value
0[1]	0	Any	Any	Any	test environment P sh r 1
1(a)(b)	0 or 1	Power Unit Query Test (#127)	MAJOR	ON	test environment P r 2

1 Run the Short Test Sequence first. If all tests pass, run the Long Test Sequence. Refer to the appropriate test description and follow the recommended procedures.

Notes:

a. Where P is an appropriate port network number taken for the Port field of the Error Log.

b. Run the Power Unit Query Test (#127) first using the **test environment P r 2** command. Then, if a carrier must be recycled to clear the CARR-POW alarm, use the **recycle carrier PC** command to run the Power Unit Recycle Test (#126). The Power Unit Recycle Test (#126) is not included in either the long or Short Test Sequences.

WARNING:
The Power Unit Recycle Test (#126) is destructive. For more information, refer to the description of this test.

System Technician-Demanded Tests: Descriptions and Error Codes

Always investigate tests in the order presented in the table below when inspecting errors in the system. By clearing error codes associated with the *Battery & Battery Charger Query Test*, for example, you may also clear errors generated from other tests in the testing sequence.

Order of Investigation	Short Test Sequence	Long Test Sequence	D/ND[1]
Battery & Battery Charger Query Test (#5) (a)	X	X	ND
AC Power Query Test (#78) (b)	X	X	ND
Power Unit Query Test (carrier E) (#127)	X	X	ND
Power Unit Query Test (carrier D) (#127)	X	X	ND
Power Unit Query Test (carrier A) (#127)	X	X	ND
Power Unit Query Test (carrier B) (#127)	X	X	ND
Power Unit Query Test (carrier C) (#127)	X	X	ND
Emergency Transfer Query Test (#124) (c)	X	X	ND
Cabinet Temperature Query Test (#122) (d)	X	X	ND
External Alarm Lead Query Test (#120) (e)	X	X	ND
Analog Ring Generator Initialization Test (#117) (f)	X	X	ND
Analog Ring Generator Query Test (#118) (f)	X	X	ND

1 D = Destructive; ND = Nondestructive

Notes:

a. Refer to POWER (Battery & Battery Charger) Maintenance documentation for a description of this test.

b. Refer to AC-POWER (AC Power) Maintenance documentation for a description of this test.

c. Refer to EMG-XFER (Emergency Transfer) Maintenance documentation for a description of this test.

d. Refer to CABINET (Cabinet Sensors) Maintenance documentation for a description of this test.

e. Refer to EXT-DEV (External Alarm) Maintenance documentation for a description of this test.

f. Refer to RING-GEN (Analog Ring Generator) Maintenance documentation for a description of this test.

NOTE:
This test only shows up in the test sequence if there is a TN768 Tone-Clock circuit pack in the port network being tested.

Power Unit Recycle Test (#126)

This test is destructive.

This test is destructive because it requires all circuit packs in the recycled carrier to be removed and inserted. These actions cause all calls originating or terminating on circuit packs in this carrier to be dropped. The pair of port carrier power units in the specified carrier is recycled. Both port carrier power units in the carrier are turned off for two seconds and then back on. After the port carrier power units have been turned back on, the test queries the Maintenance/Tape Processor in Standard system PPN, the Duplication Interface circuit pack in a PPN for a High or Critical Reliability system, or the EPN Maintenance circuit pack in an EPN multicarrier cabinet system for the status of the pair of port carrier power units in the specified carrier. If both port carrier power units are on and functioning, then the test passes. If both port carrier power units are not on and functioning, the test fails, and BOTH port carrier power units are turned off.

Table 10-143. TEST #126 Power Unit Recycle Test

Error Code	Test Result	Description/Recommendation
1000	ABORT	System resources required to run this test are not available. 1. Retry the command at 1-minute intervals a maximum of 5 times.
1129	ABORT	Only occurs when recycling carrier 2B. Indicates that the Active Tone-Clock for the EPN is in carrier 2B. 1. Issue the **set tone-clock 2A** command. 2. Rerun the test.
1130	ABORT	Only occurs when recycling carrier 2B. Indicates that the Active Expansion Interface Link for the EPN is in carrier 2B. 1. Issue the **set expansion-link A01** command. 2. Rerun the test.
2000	ABORT	Response to the test request was not received within the allowable time period.

Continued on next page

Table 10-143. TEST #126 Power Unit Recycle Test — *Continued*

Error Code	Test Result	Description/Recommendation
2029	ABORT	Internal System Error. 1. Retry the command at 1-minute intervals a maximum of 5 times.
1 (Carrier E) 2 (Carrier D) 4 (Carrier A) 8 (Carrier B) 16 (Carrier C)	FAIL	There is a problem with one or both port carrier power units on the recycled carrier. 1. Since the Power Unit Recycle Test failed, both port carrier power supplies in the recycled carrier should have been powered off by the system software. Both port carrier power units should be showing a red status LED, instead of a green one. Since the Power Unit Query Test is a subset of the Power Unit Recycle Test, the Power Unit Query Test (#127) should also fail. Run the Power Unit Query Test by using the **test environment P** command where P is the appropriate port network number. 2. If the test fails, follow the repair procedures described for Test #127. If the problem persists, follow normal escalation procedures.
	PASS	Both port carrier power units in the recycled carrier were found to be healthy by the Maintenance/Tape Processor in Standard system PPN, the Duplication Interface circuit pack in a PPN for a High or Critical Reliability system, or the EPN Maintenance circuit pack in an EPN multicarrier cabinet system after the port carrier power units were powered-down and powered up again. If the status LEDs on both port carrier power units are not showing green, then the PR-MAINT (Maintenance/Tape Processor), DUPINT (Duplication Interface) circuit pack, or the EPN MAINT (Maintenance) circuit pack may have incorrectly reported the state of the port carrier power units. Look for and resolve any alarms on these MOs.

Power Unit Query Test (#127)

This test queries the Maintenance/Tape Processor in a Standard system PPN, the Duplication Interface circuit pack in a PPN for a High or Critical Reliability system, or the EPN Maintenance circuit pack in an EPN multicarrier cabinet system for the status of the pair of port carrier power units in the specified carrier. If both port carrier units are on and functioning, the test passes. If both are not on and functioning, the test fails.

Table 10-144. TEST #127 Power Unit Query Test

Error Code	Test Result	Description/Recommendation
1000	ABORT	System resources required to run this test are not available.
2000	ABORT	Response to the test request was not received within the allowable time period.
2029	ABORT	Internal System Error. 1. Retry the command at 1-minute intervals a maximum of 5 times.

Continued on next page

Table 10-144. TEST #127 Power Unit Query Test — *Continued*

Error Code	Test Result	Description/Recommendation
	FAIL	There is a problem with one or both port carrier power units on the tested carrier. 1. For each port carrier power unit that has all status LEDs OFF, check the DC input to the port carrier power unit at the port carrier power unit outlet (see Figures 11-19 through 11-22). If there is no DC, then check the appropriate circuit breakers for the affected port carrier power unit. If the circuit breaker has tripped (that is, it is in the down position), reset the circuit breaker. If the circuit breaker trips again or DC is not present at the port carrier power unit outlet, there is probably a power wiring problem in the cabinet. Follow normal escalation procedures. 2. At this point, DC should be present at the port carrier power supply outlet. If the carrier being tested is the 1A or 2A carrier, or the 1B carrier in a High or Critical Reliability system, see “Troubleshooting Control Carrier Power Units” in Chapter 5, “Routine Maintenance Procedures”. Otherwise, use the **recycle carrier PC** command (where PC is the appropriate port network and carrier) in an attempt to bring back the power units for this carrier. If the test passes, the trouble is cleared. If the test does not pass, one port carrier power unit, or both, in the tested carrier is defective. If only one port carrier power unit is defective, the status LEDs on the healthy port carrier power unit light green for a moment. When the recycle test determines that both port carrier power units are defective, the software turns off power to both the good and defective port carrier power units. This causes the status LED(s) on the good port carrier power unit to light red.

Continued on next page

Table 10-144. TEST #127 Power Unit Query Test — *Continued*

Error Code	Test Result	Description/Recommendation
	FAIL *(cont'd.)*	3. Unplug both port carrier power units, and wait about 1-minute to allow the port carrier power units to cool down. Plug in the port carrier power units. If either port carrier power unit is operating properly (that is, the status LEDs show green), then replace the defective port carrier power unit(s). See "Port Carrier Power Unit Replacement Procedures" in this section. 4. If the replaced port carrier power unit(s) still does (do) not operate properly, then a circuit pack or a defective telephone connected to a circuit pack in the affected carrier could be causing an electrical load which is preventing the port carrier power unit from operating properly. Unseat all the circuit packs in the carrier, and reissue the **recycle carrier** command. a. If the recycle passes, then the port carrier power units are healthy, and the problem is with one of the circuit packs. Reinsert the circuit packs one at a time. If the status LED shows red after reinserting a circuit pack, replace the defective circuit pack. If the status LED still shows red, remove the Amphenol connector on the back of the slot containing this circuit pack and reissue the **recycle carrier** command. If the status LED shows green, the problem is with one of the telephones or the wiring to one of the telephones on this slot. If the status LED still shows red, escalate the problem. b. If either port carrier power unit still shows a red status LED, check for bent pins and cable placement in the affected carrier. There are failures that can occur on the Maintenance/Tape Processor, Duplication Interface, and EPN Maintenance circuit pack that **are not** detected by the respective maintenance, but that cause many, if not all, environment tests to fail. If many environment tests are failing, the suspect circuit pack, depending on the system configuration, should be replaced and the test rerun. If no other problems can be found, escalate the problem.

Continued on next page

Table 10-144. TEST #127 Power Unit Query Test — *Continued*

Error Code	Test Result	Description/Recommendation
	PASS	Both port carrier power units in the tested carrier were found to be healthy by the Maintenance/Tape Processor in a PPN for a High or Critical Reliability system, the Duplication Interface circuit pack in a PPN for a High or Critical Reliability system, or the EPN Maintenance circuit pack in an EPN multicarrier cabinet system. If the status LEDs on both port carrier power units are not showing green, the PR-MAINT (Maintenance/Tape Processor), DUPINT (Duplication Interface) circuit pack, or the EPN MAINT (Maintenance) circuit pack may have incorrectly reported the state of the port carrier power units. Look for and resolve any alarms on these MOs.

CLAN-BD (Control LAN Circuit Pack)

MO Name (in Alarm Log)	Alarm Level	Initial Command to Run[1]	Full Name of MO
CLAN-BD	MINOR	**test board UUCSS long**	Control LAN Circuit Pack
CLAN-BD	WARNING	**test board UUCSS short**	Control LAN Circuit Pack

1 UU is the universal cabinet number (1 for PPN, 2 - 3 for EPNs). C is the carrier designation (A, B, C, D, or E). SS is the number of the slot in which the circuit pack resides (01 to 21).

Control LAN Circuit Pack

The TN799DP Control LAN (CLAN) packet port circuit pack provides TCP/IP connection to adjuncts applications such as CMS, Intuity, and DCS Networking. The CLAN circuit pack has 1 10baseT Ethernet connection and up to 16 DS0 physical interfaces for PPP connections.

In addition to the TCP/IP functionality, CLAN extends the ISDN capabilities for csi models by providing Packet bus access. The TN799DP CLAN board is programmable via firmware download.

A remote socket control link (RSCL) links the CLAN and the SPE to pass call control and other management information. Since one link serves all the ports on the circuit pack, maintenance of the RSCL is part of the CLAN circuit pack maintenance.

The CLAN TN799 circuit pack combines the functions of the PGATE and PI circuit packs into one circuit pack. The PGATE or PI can be used with the CLAN to create an X.25-to-TCP/IP bridge for adjunct and DCS connectivity.

Control LAN Congestion Controls

The switch activates congestion controls on CLAN when it detects buffers exceeding the threshold. The switch releases the congestion controls when the CLAN reports that its buffer level has returned to normal levels.

If congestion:	Then the switch:
Persists for a 14-minute interval,	Raises MINOR alarm.
Exhausts buffers,	Raises MINOR alarm.
Ceases for 12 minutes,	Retires MINOR alarm.

Error Log Entries and Test to Clear Values

Table 10-145. CLAN-BD Error Log Entries

Error Type	Aux Data	Associated Test	Alarm Level	On/Off Board	Test to Clear Value
1(a)	0		MINOR	ON	
18 (b)	0		WARNING	OFF	release board UUCSS
217 (c)	0	None	WARNING	ON	
257	65535	Control Channel Loop Test (#52)	MINOR	ON	test board UUCSS l r 20
257 (d)					
513 (e)	4352-4357		MINOR	ON	
769 (f)	4358				
1293 to 1295 (g)	Any		MINOR	ON	reset board UUCSS
1537(h)	Any		MINOR	ON	
1794 (i)			MINOR	ON	
1798 (j)					
2049 (k)		Packet Interface Test (#598)	MINOR	ON	test board UUCSS l r 3
2305 2306 (l)					
2561 to 2668 (m)	Any				
2817 2819 (n)		Congestion Query Test (#600)	MINOR	ON	test board UUCSS s r 3
3073 (o)		Link Status Test (#601)	MINOR	ON	test board UUCSS s
3330 (p)			MINOR	ON	reset board UUCSS
3586 (q)					
3999 (q)	Any	None			
3840 (r)	4096-4102				
3841 3843 (s)					

Continued on next page

Table 10-145. CLAN-BD Error Log Entries

Error Type	Aux Data	Associated Test	Alarm Level	On/Off Board	Test to Clear Value
3842 (t)					
3844 (u)	Any				
3845 (v)	Any				
3846 (w)	Any				
3848 (x)	Any				
3849 (y)	Any				
3850-3861 (z)	Any				
3862 (aa)	Any				

Notes:

a. **Error Type 1**: Circuit pack stopped functioning or is not physically present.

   1. Verify that the circuit pack is present.
   2. If circuit pack is present, reset the circuit pack (**reset board UUCSS**).
   3. If the error persists, replace the circuit pack.

b. **Error Type 18**: The CLAN circuit pack busied out.

c. **Error Type 217**: applies to 10 circuit packs:

   1. Remove the circuit pack(s) against which the error is logged.

d. **Error Type 257**: Transient communication problem between switch and circuit pack; does not affect service and can be ignored.

   1. Ignore this error, unless the Control Channel Loop Test (#52) fails.
   2. If Test #52 fails, replace the circuit pack.

   Repetitive failures of the Control Channel Loop Test indicate circuit pack hardware failure.

e. **Error Type 513**: Circuit pack detected and reported hardware failure.

   1. Reset the circuit pack (**reset board UUCSS**).

   Aux Data:

4352	External RAM error
4353	Internal RAM error
4355	ROM Checksum error
4356	Angel Message Corruption error
4357	Instruction set error

f. **Error Type 769**: Logic error. By itself this error may be ignored, but it may result in other error types being reported.

g. **Error Type 1293-1295**: Critical hardware or firmware error.

If the switch detects:	Then the switch:
1 error,	Resets circuit pack.
3 errors in 15 minutes,	Raises MINOR alarm.

Error Type descriptions are as follows:

1293	Insane onboard processor
1294	Onboard translation RAM error
1295	(Aux 3) RSCL link down
	(Aux 0) RSCL keep alive failure

1. Attempt to clear the alarm (**reset board UUCSS**).
2. If alarm persists, replace circuit pack.

h. **Error Type 1537**: Switch removed hyperactive circuit pack that reported threshold number of errors.

1. Attempt to clear the alarm (**reset board UUCSS**).
2. If the error recurs within 15 minutes, replace the circuit pack.

i. **Error Type 1794**: Packet bus transmit buffers have overflowed.

1. Attempt to clear the alarm (**reset board UUCSS**).
2. If the error recurs within 15 minutes, replace the circuit pack.

j. **Error Type 1798**: Unable to write translation RAM.

1. Attempt to clear alarm (**reset board UUCSS**).
2. If alarm recurs within 15 minutes, replace the circuit pack.

k. **Error Type 2049**: Packet Interface Test (#598) failed.

1. Attempt to clear the alarm (**test board UUCSS l r 3**).
2. If alarm does not clear, reset the circuit pack (**reset board UUCSS**).
3. If circuit pack resets, execute Packet Interface Test (#598) several times.
4. If Packet Interface Test (#598) continues to fail, replace the circuit pack.

l. **Error Type 2305-2306**: Error in received frame from packet bus.

Error Type:	Description
2305	Received invalid LAPD frame.
2306	Detected parity error on received frame.

Most likely cause—packet bus problem.
Other cause—circuit pack fault.

Invalid LAPD frame errors occur when the frame

- contains a bad Cyclic Redundancy Check (CRC),
- is greater than the maximum length,
- violates the link level protocol.

1. Retry the command (**test board UUCSS**) and see if the condition clears.
2. If condition persists, execute PPE/LANBIC Receive Parity Error Counter Test (# 597) and determine if the condition clears.
3. If condition persists, execute Packet Interface Test (# 598) to verify circuit pack integrity.
4. If Packet Interface Test (# 598) fails, consult repair procedure for the packet bus.

m. **Error Type 2561-2668:** System software received an indication that the socket was closed due to an error. Errors are reported as log only. Errors logged here are for the sockets that had *no* processor channels associated with them, for example, sockets to read SNMP data. The counter base is offset by the application type of the application associated with this socket that is down. The Aux Data field of the log entry contains this application's number, for example, a SNMP application would have its application number in the Aux Data field.

NOTE:
2561 - 2668 is a range of reserved numbers for future applications. 2570 currently represents an SNMP socket failure.

n. **Error Type 2817-2819**: Congestion Query Test (#600) failed.

The Error Types correspond to the descriptions:

2817	All buffers exhausted.
2819	Utilized buffers exceed threshold.

If:	Then:
Active buffers exceed threshold,	CLAN enters congested state.

1. Refer to Congestion Query Test (# 600) for Abort and Fail 3601s.

o. **Error Type 3073**: Remote Socket Control Link (RSCL) or Link Status Test (#601) failed. This failure may be due to:

- This circuit pack
- The packet bus
- The packet interface circuit pack.

If:	Then:
RSCL disconnects at link level	Link fails
Link cannot be reconnected quickly	Switch raises MINOR alarm

p. **Error Type 3330**: Critical failure in Packet Bus interface.

Below, Error Types correspond to descriptions.

If the switch detects:	Then it:
1 error,	Resets circuit pack.
2 errors in 15 minutes,	Raises MINOR alarm.

1. Attempt to clear the alarm (**reset board UUCSS**).
2. If alarm persists, replace circuit pack.

q. **Error Type 3586 and 3999**: Switch removed hyperactive circuit pack that reported threshold number of errors. One or more of the following symptoms may be present:

- Circuit pack port tests return `NO BOARD`.
- List configuration command shows circuit pack and ports are installed properly

If Error Type 3999:	And traffic volume is:	Then:
Does not accompany Error Type 3586,	Heavy	Circuit pack is in service, but sent at least half hyperactive threshold. With heavy traffic, this is normal.
Does not accompany Error Type 3586,	Light	Circuit pack is in service, but sent at least half hyperactive threshold. With light traffic, this error indicates a problem with the circuit pack, its links, or the equipment attached to the links.
Accompanies Error Type 3586,	Either Light or Heavy	Switch removed hyperactive circuit pack.

1. Busyout (**busyout board UUCSS**) and release (**release board UUCSS**) circuit pack
2. Allow 30 minutes for condition to clear itself.
3. To re-establish circuit pack into service manually, busyout (**busyout board UUCSS**), reset (**reset board UUCSS**), and release (**release board UUCSS**) the circuit pack.
4. If error recurs within 15 minutes, replace the circuit pack.
5. If the same error occurs on a different circuit pack, follow normal escalation procedures.

r. **Error Type 3840**: Circuit pack received bad control channel message from switch.

Aux Data:

4096	Bad major heading
4097	Bad port number
4098	Bad data
4099	Bad sub-qualifier
4100	State inconsistency
4101	Bad logical link
4102	Bad application identifier

s. **Error Type 3841-3843**: errors do not affect service.

Below, Error Types correspond to descriptions.

3841	Internal firmware error.
3843	Bad translation RAM. Call uses another translation location.

These errors do not affect service, however, they may cause reports of other errors that do affect service.

If Error Type 3843 begins to affect service, it escalates to Error Type 1294.

t. **Error Type 3842**: Packet interface receive buffers overflowed.

If this error occurs frequently, the overflow may be congesting the circuit pack.

1. Refer to Receive FIFO Overflow Error Counter Test (#596).

u. **Error Type 3844**: LAPD frame contains LAPD Protocol Error.

By themselves, these errors do not affect service.

v. **Error Type 3845**: Angel inter processor error.

By themselves, these errors do not affect service.

w. **Error Type 3846**: High CPU occupancy.

By themselves, these errors do not affect service.

x. **Error Type 3848**: Interprocessor LAPD protocol error.

By themselves, these errors do not affect service.

y. **Error Type 3849**: Interprocessor LAPD frame error.

By themselves, these errors do not affect service.

z. **Error Type 3850 - 3861**: IBL error.

By themselves, these errors do not affect service. These errors can occur only on a G3csi machine that has an Interboard Link (IBL).

aa. **Error Type 3862**: Memory allocation failure.

By themselves, these errors do not affect service.

System Technician-Demanded Tests: Descriptions and Error Codes

Investigate errors in the order they appear in the table below.

Order of Investigation	Short Test Sequence	Long Test Sequence	D/ND[1]
Control Channel Loop-Around Test #52	X	X	ND
Circuit Pack Restart Test #252			D
Invalid LAPD Frame Error Counter Test #597		X	ND
PPE/LANBIC Receive Parity Error Counter Test #595		X	ND
Receive FIFO Overflow Error Counter Test #596		X	ND
Packet Interface Test #598	X	X	ND
Congestion Query Test #600	X	X	ND
Link Status Test #601	X	X	ND

1 D = Destructive; ND = Nondestructive

Control Channel Loop-Around Test (#52)

This non-destructive test fails if the circuit pack does not return to a sane state after being reset. This test queries the circuit pack for its code and vintage, and verifies its records.

Table 10-146. TEST #52 Control Channel Loop-Around Test

Error Code	Test Result	Description/Recommendation
None 2100	ABORT	Could not allocate the necessary system resources to run test. 1. Retry the command at 1-minute intervals, up to 5 times. 2. If the problem persists, escalate the problem.
	FAIL	The circuit pack failed to return the code or vintage. 1. Retry command at 1-minute intervals, up to 5 times. 2. Reset the board (**reset board UUCSS**). 3. If reset aborts with error code 1115, busyout (**busyout board UUCSS**), reset (**reset board UUCSS**), and release board (**release board UUCSS**). 4. If test continues to fail, replace the circuit pack. 5. Escalate the problem if failures continue.
	PASS	Test successful.

Circuit Pack Restart Test (#252)

NOTE:
This test is destructive.

Execute this test (not part of either short or long demand test sequence) to reset the circuit pack only if there are PPCPU errors. This test fails if the circuit pack does not return to a sane state after being reset. The circuit pack resets through the SAKI Sanity Test (#53).

Table 10-147. Test #252 Circuit Pack Restart Test

Error Code	Test Result	Description/Recommendation
None	ABORT	Could not allocate the necessary system resources to run test. 1. Retry the command at 1-minute intervals, up to 5 times. 2. If the problem persists, escalate the problem.
1015	ABORT	Port is not out-of-service. 1. Busyout the circuit pack (**busyout board UUCSS**). 2. Retry the command at 1-minute intervals, up to 5 times. 3. If the problem persists, escalate the problem.
2100	ABORT	Could not allocate the necessary system resources to run test. 1. Retry the command at 1-minute intervals, up to 5 times. 2. If the problem persists, escalate the problem.
1, 2	FAIL	The circuit pack failed to reset. 1. Retry command at 1-minute intervals, up to 5 times. 2. If the problem persists, pull out and reseat the circuit pack. 3. If the problem persists, replace the circuit pack.
	PASS	The circuit pack initialized correctly.

PPE/LANBIC Receive Parity Error Counter Test (#595)

This test is non-destructive. When the CLAN circuit pack detects a parity error with a received frame, it increments the PPE/LANBIC Receive Parity error counter. This test reads and clears the counter, and may verify repair of problem.

Errors may indicate a problem with:

- This circuit pack
- A packet bus
- Another circuit pack on the bus

Table 10-148. TEST #595 PPE/LANBIC Receive Parity Error Counter Test

Error Code	Test Result	Description/Recommendation
2000	ABORT	Did not receive circuit pack test response within the allowable time period. 1. Retry command at 1-minute intervals, up to 5 times. 2. If the problem persists, reset the circuit pack (**reset board UUCSS**). 3. If the problem persists, replace the circuit pack.
2100	ABORT	Could not allocate the necessary system resources to run test.
2500	ABORT	Internal system error. 1. Retry the command at 1-minute intervals, up to 5 times. 2. If the problem persists, escalate the problem.
1-10	FAIL	Circuit pack detects parity errors. The Error Code indicates the value of the on-board error counter. 1. Retry the command at 1-minute intervals, up to 5 times. 2. If the test continues to fail, execute the Packet Interface Test (#598) (**test board UUCSS**). 3. If Packet Interface Test (#598) fails, see Packet Bus repair procedures.
	PASS	Circuit pack detects no errors.

Receive FIFO Overflow Error Counter Test (#596)

This test is non-destructive. When the CLAN circuit pack detects packet bus buffer overflow, it increments the error on the FIFO Overflow error counter. This test reads and clears the counter.

If errors are:	Then they may be due to:
Occasional	Statistical buffer sizing
Persistent	Circuit pack congestion that requires redistribution of traffic load

Table 10-149. TEST #596 Receive FIFO Overflow Error Counter Test

Error Code	Test Result	Description/Recommendation
2000	ABORT	Did not receive circuit pack test response within the allowable time period. 1. Retry command at 1-minute intervals, up to 5 times. 2. If the problem persists, reset the circuit pack (**reset board UUCSS**). 3. If the problem persists, replace the circuit pack.
2100	ABORT	Could not allocate the necessary system resources to run test.
2500	ABORT	Internal system error. 1. Retry the command at 1-minute intervals, up to 5 times. 2. If the problem persists, escalate the problem.
1-10	FAIL	Circuit pack detects overflow errors. The error code indicates the value of the on-board error counter. 1. Retry the command at 1-minute intervals, up to 5 times. 2. If the test continues to fail, execute the Packet Interface Test (#598) (**test board UUCSS**). 3. If Packet Interface Test (#598) fails, refer to Packet Bus repair procedures.
	PASS	Circuit pack detects no errors.

Invalid LAPD Frame Error Counter Test (#597)

This test is non-destructive.

CLAN detects invalid frames when it receives

- a frame with a CRC error
- an unrecognizable frame
- a recognizable frame in an unexpected state

When the CLAN circuit pack detects an invalid LAPD frame, it increments the Invalid LAPD Frame error counter. This test reads and clears the counter, and verifies the repair of the problem.

Errors may indicate a

- circuit pack problem
- packet bus problem
- problem with another circuit pack on the bus

Table 10-150. TEST #597 Invalid LAPD Frame Error Counter Test

Error Code	Test Result	Description/Recommendation
2000	ABORT	Did not receive circuit pack test response within the allowable time period. 1. Retry command at 1-minute intervals, up to 5 times. 2. If the problem persists, reset the circuit pack (**reset board UUCSS**). 3. If the problem persists, replace the circuit pack.
2100	ABORT	Could not allocate the necessary system resources to run this test.
2500	ABORT	Internal system error. 1. Retry the command at 1-minute intervals, up to 5 times. 2. If the problem persists, escalate the problem.

Continued on next page

Table 10-150. TEST #597 Invalid LAPD Frame Error Counter Test — *Continued*

Error Code	Test Result	Description/Recommendation
1-10	FAIL	The circuit pack detects LAPD frame errors. The error code indicates the value of the on-board error counter. 1. Retry the command at 1-minute intervals, up to 5 times. 2. If the test continues to fail, execute the Packet Interface Test (#598) (**test board UUCSS long**). 3. If Packet Interface Test (#598) fails, refer to Packet Bus repair procedures.
	PASS	Circuit pack detects no errors.

Packet Interface Test (#598)

This non-destructive test checks the packet bus interface circuitry on the CLAN circuit pack. Test failure indicates faulty circuit pack.

Table 10-151. TEST #598 Packet Interface Test

Error Code	Test Result	Description/Recommendation
2000	ABORT	Did not receive circuit pack test response within the allowable time period. 1. Retry command at 1-minute intervals, up to 5 times. 2. If the problem persists, reset the circuit pack (**reset board UUCSS**). 3. If the problem persists, replace the circuit pack.

Continued on next page

Table 10-151. TEST #598 Packet Interface Test — *Continued*

Error Code	Test Result	Description/Recommendation
2012	ABORT	Could not allocate the necessary system resources to run test.
2100	ABORT	Internal system error. 1. Retry the command at 1-minute intervals, up to 5 times. 2. If the problem persists, escalate the problem.
	FAIL	Circuit pack has detected a failure of the Packet Interface Test (#598). 1. Retry command at 1-minute intervals, up to 5 times. 2. If the problem persists, reset the circuit pack (**reset board UUCSS**). 3. If the test continues to fail, replace the circuit pack.
	PASS	The Packet Interface Test (#598) passed.

Congestion Query Test (#600)

This non-destructive test queries the number of used buffers to determine if the CLAN circuit pack is congested.

If:	Then:
Used buffers are, or are nearly, exhausted,	The test fails
The test fails,	The switch redirects outgoing calls to another available CLAN, and denies new incoming calls

Normal call handling resumes when the CLAN circuit pack has recovered from congestion.

Table 10-152. TEST #600 Congestion Query Test

Error Code	Test Result	Description/Recommendation
2000	ABORT	Did not receive circuit pack test response within the allowable time period. 1. Retry command at 1-minute intervals, up to 5 times. 2. If the problem persists, reset the circuit pack (**reset board UUCSS**). 3. If the problem persists, replace the circuit pack.
2012	ABORT	Could not allocate the necessary system resources to run test.
2100	ABORT	Internal system error. 1. Retry the command at 1-minute intervals, up to 5 times. 2. If the problem persists, escalate the problem.
1	FAIL	The buffer level is nearly exhausted.
2	FAIL	The CLAN is congested, and no buffers are available. 1. Retry command at 1-minute intervals, up to 5 times. 2. If command continues to fail, examine the CLAN port measurements to determine which ports are heavily utilized and the processor occupancy of the circuit pack. *Low processor occupancy* when CLAN congested indicates circuit pack failure. 1. If the problem persists, reset the circuit pack (**reset board UUCSS**). 2. If congestion recurs, replace the circuit pack. *High processor occupancy* indicates the CLAN is congested due to traffic load. 1. To relieve congestion in the short term, selectively busyout ports (**busyout port UUcSSpp**) on the Control LAN circuit pack. 2. To achieve a more permanent resolution, it may be necessary to move ports on this circuit pack to other Control LAN circuit packs. 3. Consider replacing affected CLAN ports with new ports.
3	FAIL	The CLAN circuit pack is not operating normally and is congested.
	PASS	Hardware setting and attached cable type match CLAN circuit pack administration. The circuit pack detects no errors.

Link Status Test (#601)

This non-destructive test determines the state of the call control signaling link for Control LANs. If the signaling link is physically connected, the test sends a test frame over the link and checks for a response. The test passes only if both the signaling link is connected and the test frame is successfully transmitted.

A failure may indicate a problem with:

- This circuit pack
- The packet bus
- The packet interface circuit pack

Table 10-153. TEST #601 Link Status Test

Error Code	Test Result	Description/Recommendation
1125	ABORT	RSCL link or C-LAN board not in service. 1. Release the board. 2. Repeat the test. 3. Escalate if the problem persists.
2012	ABORT	Could not allocate the necessary system resources to run this test.
2100	ABORT	Internal system error. 1. Retry command at 1-minute intervals, up to 5 times. 2. If the problem persists, escalate the problem.

Continued on next page

Table 10-153. TEST #601 Link Status Test — *Continued*

Error Code	Test Result	Description/Recommendation
2	FAIL	The RSCL control link disconnected. 1. Retry command at 1-minute intervals, up to 5 times. 2. If the test continues to fail, execute the Packet Interface Test (#598) (**test board UUCSS**) to determine if the problem is due to the circuit pack. 3. If the Packet Interface Test (#598) fails, refer to Packet Interface Test repair procedures. 4. If the Packet Interface Test (#598) passes, refer to Packet Control Circuit Pack and Packet Bus repair procedures.
3	FAIL	Received no response to RSCL control link test frame. 1. Retry command at 1-minute intervals, up to 5 times. 2. If the problem persists, reset the circuit pack (**reset board UUCSS**). 3. If test continues to fail, replace the circuit pack.
	PASS	RSCL control link connected.

CLSFY-BD (Call Classifier Circuit Pack)

MO Name (in Alarm Log)	Alarm Level	Initial Command to Run[1]	Full Name of MO
CLSFY-BD	MIN	test board PCSS sh	Call Classifier Circuit Pack
CLSFY-BD	WRN	test board PCSS sh	Call Classifier Circuit Pack

1 Where P is the port network number (1 for PPN and 2 or 3 for EPN); C is the carrier designation (for example, A, B, C, D, or E); and SS is the address of the slot in the carrier where the circuit pack is located (for example, 01, 02, etc.).

Refer to XXX-BD (Common Port Circuit Pack) Maintenance documentation for circuit pack level errors. See also Call Classifier Port (CLSFY-PT) Maintenance documentation for related port information.

CLSFY-PT (Call Classifier Port)

MO Name (in Alarm Log)	Alarm Level	Initial Command to Run[1]	Full Name of MO
CLSFY-PT(a)	MAJOR	test port PCSSpp sh	Call Classifier Port Maintenance
CLSFY-PT	MINOR	test port PCSSpp sh	Call Classifier Port Maintenance
CLSFY-PT	WARNING	release port PCSSpp	Call Classifier Port Maintenance

1 Where P is the port network number (1 for PPN and 2 or 3 for EPN); C is the carrier designation (e.g., A, B, C, D, or E); SS is the address of the slot in the carrier where the circuit pack is located (e.g., 01, 02, etc.); and pp is the 2-digit port number (e.g., 01).

The TN744 Call Classifier (CLSFY-BD) circuit pack is a service circuit pack that enables usage of the Outbound Call Management (OCM) and the Inbound Call Management (ICM) features. On a G3iV2-386 system, the TN744 also enables usage of R2-MFC signaling for incoming and outgoing feature operation. There are eight ports (CLSFY-PTs) on the Call Classifier circuit pack. Each port can handle call classification, touch-tone reception, or, for G3iV2-386 systems, MFC tone generation and detection or touch-tone reception.

The CLSFY-PT maintenance feature defines a set of tests to ensure that the Call Classifier circuit pack ports are capable of detecting tones for call classification, and detecting and generating necessary tones for correct MFC feature operation.

Hardware Error Log Entries and Test to Clear Values

Table 10-154. Call Classifier Port (CLSFY-PT) Error Log Entries

Error Type	Aux Data	Associated Test	Alarm Level	On/Off Board	Test to Clear Value
1	any	Tone Detector Audit/Update Test (#43)	MAJOR/ MINOR (a)	ON	test port PCSSpp r 2
18		Port has been busied out by system technician	WARNING	OFF	release port PCSSpp
257 (b)	17666	Test (#43)	MAJOR/ MINOR(a)	ON	test port PCSSpp r 3
513 (c)	any	Tone Detection Verification Test (#42)	MAJOR/ MINOR (a)	ON	test port PCSSpp r 3

Notes:

a. There are two possible alarm levels for this error type: major alarm and minor alarm. A major alarm is raised if the total number of call classifier ports currently in-service is less than or equal to 1/2 of the administered threshold number. Otherwise, a minor alarm is raised. In either case, run the short test sequence against the port and follow the error code procedures for the individual tests.

   The threshold number of call classifier ports for service is administered using the **change system-parameters maintenance** command. For details, refer to Chapter 5, “Routine Maintenance Procedures”.

b. The call classifier port lost its translation. Testing the call classifier port is sufficient to reload its translation. If testing the call classifier port does not clear the error, then the call classifier circuit pack containing the defective call classifier port should be replaced.

c. This error indicates the call classifier port is having problems detecting system tones (DTMF, etc.) or detecting and generating necessary R2-MFC tones. This error should accompany some percentage of failed calls. If this error type is persistently logged, then the call classifier circuit pack containing the defective call classifier port should be replaced.

System Technician-Demanded Tests: Descriptions and Error Codes

Always investigate tests in the order presented in the following tables when inspecting errors in the system. By clearing error codes associated with the *Tone Detection Verification Test*, for example, you may also clear errors generated from other tests in the testing sequence.

Order of Investigation	Short Test Sequence	Long Test Sequence	D/ND[1]
Tone Detection Verification Test (#42)	X	X	ND
Tone Detection Audit/Update Test (#43)	X	X	ND

1 D = Destructive; ND = Nondestructive

Tone Detection Verification Test (#42)

This test checks out each port in both the touch-tone receiver mode and in the R2-MFC tone detection/generation mode. During the first half of the test, the touch-tone receiver mode is tested. In the second half of the test, each port’s ability to accurately detect and generate all forward and backward MFC tones is verified.

Table 10-155. TEST #42 Tone Detection Verification Test

Error Code	Test Result	Description/Recommendation
none	ABORT	The system was not able to allocate all the resources needed for this test OR there was an Internal System Error.
1	ABORT	The system could not allocate all the resources needed to test the tones.
1001	ABORT	The system was unable to put the Call Classifier port in the appropriate mode to test it.
1002	ABORT	The system could not allocate time slots for the test connection. This situation could occur when the system is heavily loaded. If the system is not heavily loaded, then test the TDM-BUS via the **test tdm [1|2]** command. Refer to the TDM-BUS (TDM Bus) Maintenance documentation for details. 1. Retry the command at one minute intervals a maximum of 5 times.
1003	ABORT	The system could not allocate a Tone-Clock circuit pack for the test connection. This situation could occur when the system is heavily loaded or if a Tone-Clock circuit pack is not present in the port network when this test is executed. 1. Verify the existence of a Tone-Clock circuit pack in the same port network. 2. If a Tone-Clock circuit pack is missing, install one in the same port network. 3. Allow approximately one minute for the Tone-Clock circuit pack maintenance to run on the newly inserted Tone-Clock circuit pack. 4. Retry the command at one minute intervals a maximum of 5 times.

Continued on next page

Table 10-155. TEST #42 Tone Detection Verification Test — *Continued*

Error Code	Test Result	Description/Recommendation
2006	ABORT	This abort code indicates that the active Tone-Clock circuit pack might not be functioning properly. If there is more than one Tone Detector circuit pack in the system, then the problem can be either with the Tone-Clock circuit pack or the Tone Detector circuit pack. This could also be caused by the companding mode administered for the system not matching that of the Tone Detector circuit pack [G3iV2-386]. 1. [G3iV2-386] Make sure that the companding mode of the system matches that of the Tone Detector (TN748 for Mu-law systems and TN420 for A-law systems). 2. Test the active Tone-Clock circuit pack in the port network. This test is being executed via the **test tone-clock qualifier** system technician command. (“qualifier” is the carrier of the active Tone-Clock circuit pack to be tested. Valid qualifiers are: a, b, 1a, 1b, 2a, and 2b.) Refer to the TONE-BD (Tone-Clock Circuit Pack) Maintenance documentation for details. 3. Retry the command at 1-minute intervals a maximum of 5 times.
2000	ABORT	Response to the test request was not received within the allowable time period.
2100	ABORT	Could not allocate the necessary system resources to run this test. 1. Retry the command at 1-minute intervals a maximum of 5 times.

Continued on next page

Table 10-155. TEST #42 Tone Detection Verification Test — *Continued*

Error Code	Test Result	Description/Recommendation
1-3	FAIL	DTMF digits were not detected correctly. This may or may not impact reception of R2-MFC calls. 1. Run the short test sequence via the **test port PCSSpp sh r 1** command. 2. If the problem persists, the system is still operating properly but system capacity will be reduced. In order to restore system performance to normal, replace the Call Classifier circuit pack containing the defective CLSFY-PT (Call Classifier Port).
101-122	FAIL	Forward or Backward MFC signals were not correctly generated or detected. This impacts reception of incoming MFC calls. 1. Run the short test sequence via the **test port PCSSpp sh r 1** command. 2. If the problem persists, the system is still operating properly but system capacity will be reduced. In order to restore system performance to normal, replace the Call Classifier circuit pack containing the defective CLSFY-PT (Call Classifier Port).
	PASS	Tone Detection Verification is successful. The Call Classifier Port (CLSFY-PT) is able to detect/generate all necessary tones.

Tone Detector Audit/Update Test (#43)

A sanity audit is performed on the CLSFY-PT (Call Classifier Port).

Table 10-156. Tone Detector Audit/Update Test (#43)

Error Code	Test Result	Description/Recommendation
none	ABORT	The system was not able to allocate all the resources needed for this test. 1. Wait 1-minute, and repeat the command a maximum of 5 times.
2000	ABORT	Response to the test request was not received within the allowable time period.
2100	ABORT	Could not allocate the necessary system resources to run this test. 1. Retry the command at 1-minute intervals a maximum of 5 times.
	FAIL	Hardware audit failed. 1. Run the short test sequence via the **test port PCSSpp sh r 1** command. 2. If the problem persists, the system is still operating properly but system capacity will be reduced. In order to restore system performance to normal, replace the CLSFY-BD (Call Classifier circuit pack) containing the defective CLSFY-PT (Call Classifier Port).
	PASS	The (CLSFY-PT) Call Classifier Port has passed the sanity inquiry.

CO-BD (Central Office Trunk Circuit Pack)

MO Name (in Alarm Log)	Alarm Level	Initial Command to Run[1]	Full Name of MO
CO-BD	MIN	test board PCSS sh	Central Office Trunk Circuit Pack
CO-BD	WRN	test board PCSS sh	Central Office Trunk Circuit Pack

1 Where P is the port network number (1 for PPN and 2 or 3 for EPN); C is the carrier designation (for example, A, B, C, D, or E); and SS is the address of the slot in the carrier where the circuit pack is located (for example, 01, 02, etc.).

Refer to XXX-BD (Common Port Circuit Pack) Maintenance documentation for circuit pack level errors. See also CO-TRK (CO Trunk) Maintenance documentation for related trunk information.

CO-DS1 (DS1 CO Trunk)

Table 10-157.

MO Name (in Alarm Log)	Alarm Level	Initial Command to Run	Full Name of MO
CO-DS1	MAJOR[1]	test trunk <grp/mbr> l	DS1CO Trunk
CO-DS1	MINOR	test trunk <grp/mbr> l	DS1CO Trunk
CO-DS1	WARNING	test trunk <grp/mbr>	DS1CO Trunk

1 A Major alarm on a trunk indicates that alarms on these trunks are not downgraded by the **set options** command and that at least 75 percent of the trunks in this trunk group are alarmed.

A DS1CO (central office) trunk provides a communications channel between the system and a central office switch through either a 1.544 Mbps or a 2.048 Mbps [G3iV2-386] DS1 link. A 24 channel DS1 link consists of 24 digital DS1CO trunks. A 32 channel DS1 link [G3iV2-386] consists of 30 digital DS1CO trunks. A DS1CO trunk can be used for both voice and data communication.

The DS1CO Trunk Maintenance provides a strategy in the system to maintain a CO trunk via a port on the DS1 Interface circuit pack. The TN767 and TN464 DS1 Interface circuit packs support the low level CO trunk signaling interfaces, ground-start and loop-start. This strategy covers the in-line errors log, initialization tests, periodic tests, system technician-demanded tests, and alarm resolution and escalation.

Three trunk service states are specified in the DS1CO trunk maintenance. They are: *out-of-service* in which the trunk is in a deactivated state and cannot be used for either incoming or outgoing calls; *in-service* in which the trunk is in an activated state and can be used for both incoming and outgoing calls; *disconnect* (ready-for-service) in which the trunk is in an activated state but can only be used for an incoming call. If the DS1 Interface circuit pack is out-of-service, then all trunks on the DS1 Interface circuit pack are also in the out-of-service state, and a Warning alarm is raised for each trunk.

Hardware Error Log Entries and Test to Clear Values

Table 10-158. DS1 CO Trunk Error Log Entries

Error Type	Aux Data	Associated Test	Alarm Level	On/ Off Board	Test to Clear Value
0[1] 1 (a)	0 57408	Any	Any	Any	test trunk <grp>/<mbr>
1 (a)	57487				
15 (b)	Any	Port Audit and Update Test (#36)			
18 (c)	0	busyout trunk <grp>/<mbr>	WARNING	OFF	release trunk <grp>/<mbr>
130 (d)		None	WARNING	ON	test trunk <grp>/<mbr>
257 (e)	57392	DS1 CO Dial Tone Seizure Test (#314)	MIN/MAJ[2]	OFF	
513 (f)	57393	DS1 CO Dial Tone Seizure Test (#314)	MIN/MAJ[2]	OFF	
769 (g)	57484				
1025		DS1CO Dial Tone Seizure Test (#314)	WARNING	OFF	test trunk <grp>/<mbr>
1281		Conference Circuit Test (#7)	MAJ/MIN/ WRN[3]	ON	test trunk <grp>/<mbr> r 4
1537		NPE Crosstalk Test (#6)	MAJ/MIN/ WRN[3]	ON	test trunk <grp>/<mbr> r 3
1793 (h)				ON	test board PCSS l
2562(i))	16665				
2817(j)	52992				
3840 (k)		Port Audit and Update Test (#36)			

1 Run the Short Test Sequence first. If all tests pass, run the Long Test Sequence. Refer to the appropriate test description and follow the recommended procedures.

2 This alarm will only be raised when the System-Parameter Country form has the Base Tone Generator field set to 4 (Italy). This alarm will be a MINOR alarm unless 75% or more trunks in this trunk group are out of service, then the alarm will be upgraded to a MAJOR alarm.

3 Minor alarms on this maintenance object (MO) may be downgraded to Warning alarms based on the values used in the **set options** command. If the Minor alarm is not downgraded by the **set options** values, the Minor alarm is upgraded to a Major alarm if 75 percent of the trunks in this group are alarmed.

Notes:

a. Error Type 1—Aux Data 57408—No tip ground is detected on an outgoing call.

   Aux Data 57487—PBX could not get “loop close” signal (TN767).

   The DS1 Interface circuit pack detected a hardware fault. These errors cause the Dial Tone Test (#314) to run and are only considered a problem if the Dial Tone Test fails (in which case Error Type 1025 also shows up). In this case, the trunk may be put in ready-for-service state (shown as “disconnected” by status command), which allows only incoming calls. Run the Dial Tone Test (#314) and follow its outlined procedures.

b. Error Type 15—This is a software audit error that does not indicate any hardware malfunction. Run Short Test Sequence and investigate associated errors (if any).

c. Error Type 18—System Technician has busied-out the trunk to the out-of-service state. No calls can be made on this trunk except the Facility Access Test Call. For details on this feature, refer to “Facility Test Calls” section in Chapter 5, “Routine Maintenance Procedures”.

d. Error Type 130—This error type indicates that the circuit pack has been removed or has been insane for more than 11 minutes. To clear the error, reinsert or replace the circuit pack.

e. Error Type 257—The DS1 Interface circuit pack detects a hardware fault. The Aux Data field contains the following error type: 57392—no external release on PBX disconnect [E030]. Escalate the problem.

f. Error Type 513—The DS1 Interface circuit pack detects a hardware fault. The Aux Data field contains the following error type: 57393—belated external release on PBX disconnect [E031]. Escalate the problem.

g. Error Type 769—The DS1 Interface circuit pack detects a hardware fault. The Aux Data field contains the following error type:—57484, fault is detected on tip/ring [E08C]. Escalate the error.

h. Error Type 1793—DS1 Interface circuit pack is out-of-service. Look for DS1-BD errors in the Hardware Error Log. Refer to the DS1-BD (DS1 Trunk Circuit Pack) Maintenance documentation for details.

i. Error Type 2562—Retry Failure error. This error is logged only. It is not a hardware failure and hence does not start any testing or generate any alarms. This error comes from call processing and is generated when a second attempt (retry) to seize an outgoing trunk fails.

j. Error Type 2817—Glare error. This error is logged only. It is not a hardware failure and hence does not start any testing or generate any alarms. This error is the result of a simultaneous seizure of a two-way trunk from both the near-end and the far-end. Attempt to place the call again. If the error persists, execute the Dial Tone Seizure Test (#314) and follow those procedures.

k. Error Type 3840—Port Audit and Update Test (#36) failed due to an internal system error. Enter the **status trunk** command to verify the status of the trunk. If the trunk is out-of-service, then enter the **release trunk** command to put it back into in-service. Retry the test command. If the test continues to abort, then escalate the problem.

System Technician-Demanded Tests: Descriptions and Error Codes

Always investigate tests in the order they are presented in the table below when inspecting errors in the system. By clearing error codes associated with the *NPE Crosstalk Test,* for example, you may also clear errors generated from other tests in the testing sequence.

For example, you may also clear errors generated from other tests in the testing sequence.

Order of Investigation	Short Test Sequence	Long Test Sequence	D/ND[1]
NPE Crosstalk Test (#6)		X	ND
Conference Circuit Test (#7)		X	ND
DS1CO Trunk Seizure Test (#314)	X	X	ND
Port Audit and Update Test (#36)	X	X	ND

1 D = Destructive; ND = Nondestructive

NPE Crosstalk Test (#6)

One or more Network Processing Elements (NPEs) resides on each circuit pack with a TDM Bus interface. The NPE controls port connectivity and gain, and provides conferencing functions on a per-port basis. The NPE Crosstalk Test verifies that this port's NPE channel talks on the selected time slot and never crosses over to time slots reserved for other connections. If the NPE is not working correctly, one-way and noisy connections may be observed. This test is usually only part of a port's Long Test Sequence and takes about 20 to 30 seconds to complete.

Table 10-159. TEST #6 NPE Crosstalk Test

Error Code	Test Result	Description/Recommendation
	ABORT	System resources required for this test are not available. 1. Retry the command at 1-minute intervals a maximum of 5 times.
1000	ABORT	System resources required to run this test were not available. The port may be busy with a valid call. Use the **display port PCSSpp** command to determine the trunk group/member number of the port. Use the **status trunk** command to determine the service state of the port. If the service state indicates that the port is in use, then the port is unavailable for certain tests. You must wait until the port is idle before retesting. 1. If the port status is active but the port is not in use (no calls), check the error log for error type 1025 (see the error log table for a description of this error and required actions). The port may be locked up. 2. If the port status is idle, retry the command at 1-minute intervals for a maximum of 5 times.
1001	ABORT	System resources required for this test are not available. 1. Retry the command at 1-minute intervals a maximum of 5 times.
1002	ABORT	The system could not allocate time slots for the test. The system may be under heavy traffic conditions or it may have time slots out-of-service due to TDM-BUS errors. Refer to the TDM-BUS (TDM Bus) Maintenance documentation to diagnose any active TDM-BUS errors. 1. If system has no TDM-BUS errors and is not handling heavy traffic, repeat test at 1-minute intervals a maximum of 5 times.
1003	ABORT	The system could not allocate a tone receiver for the test. The system may be oversized for the number of Tone Detectors present or some tone detectors may be out-of-service. 1. Look for TTR-LEV errors in the Error Log. If present, refer to TTR-LEV (TTR Level) Maintenance documentation. 2. Look for TONE-PT errors in the Error Log. If present, refer to TONE-PT (Tone Generator) Maintenance documentation. 3. If neither condition exists, retry the test at 1-minute intervals a maximum of 5 times.

Continued on next page

Table 10-159. TEST #6 NPE Crosstalk Test — *Continued*

Error Code	Test Result	Description/Recommendation
1004	ABORT	The port was seized by a user for a valid call. Use the **display port PCSSpp** command to determine the trunk group/member number of the port. Use the **status trunk** command to determine the service state of the port. If the service state indicates that the port is in use, then the port is unavailable for certain tests. You must wait until the port is idle before retesting. 1. If the port status is idle, retry the command at 1-minute intervals for a maximum of 5 times.
1020	ABORT	The test did not run due to a previously existing error on the specific port or a more general circuit pack error. 1. Examine Error Log for existing errors against this port or the circuit pack and attempt to diagnose the already existing error.
2000	ABORT	Response to the test request was not received within the allowable time period.
2100	ABORT	System resources required for this test are not available. 1. Retry the command at 1-minute intervals a maximum of 5 times.
2053	ABORT	At least one of the following errors was found on the DS1 circuit pack: loss of signal (1281), blue alarm (1793), red alarm (2049), yellow alarm (2305), or hyperactivity (1537). 1. Look for the above error types in the Hardware Error Log and follow the procedures given in the appropriate DS1-BD or UDS1-BD maintenance documentation for the listed error types.

Continued on next page

Table 10-159. TEST #6 NPE Crosstalk Test — *Continued*

Error Code	Test Result	Description/Recommendation
	FAIL	The NPE of the tested port was found to be transmitting in error. This causes noisy and unreliable connections. 1. Replace the circuit pack.
	PASS	The port is correctly using its allocated time slots. User-reported troubles on this port should be investigated using other port tests and examining station, trunk, or external wiring.
0	NO BOARD	The test could not relate the internal ID to the port (no board). This could be due to incorrect translations, no board is inserted, an incorrect board is inserted, an insane board is inserted, or the board is hyperactive (see note below). 1. Check to ensure that the board translations are correct. Use the **list config** command, and resolve any problems that are found. 2. If the board was found to be correctly inserted in step 1, issue the **busyout board** command. 3. Issue the **reset board** command. 4. Issue the **release busy board** command. 5. Issue the **test board long** command. This should re-establish the linkage between the internal ID and the port. If this is not the case, dispatch to check to ensure that there is a valid board inserted. **NOTE:** Hyperactivity causes some special problems with the sequence suggested above. If the ports are translated after issuing the **list config** command but the 'Vintage' field reports that there is no board (when there really is a board), then the **busyout board** and the **release busy board** commands will not work (even though the **reset board** command will work). The software will put the hyperactive board back in service after the hyperactivity clears.

Conference Circuit Test (#7)

One or more Network Processing Elements (NPEs) reside on each circuit pack with a TDM Bus interface. The NPE controls port connectivity and gain, and provides conferencing functions on a per-port basis. The Conference Circuit Test verifies that the NPE channel for the port being tested can correctly perform the conferencing function. The NPE is instructed to listen to several different tones and conference the tones together. The resulting signal is then measured by a tone detector port. If the level of the tone is within a certain range, the test passes.

Table 10-160. TEST #7 Conference Circuit Test

Error Code	Test Result	Description/Recommendation
	ABORT	System resources required for this test are not available. 1. Retry the command at 1-minute intervals a maximum of 5 times.
1000	ABORT	The test was aborted. System resources required to run this test were not available. The port may be busy with a valid call. Use the **display port PCSSpp** command to determine the trunk group/member number of the port. Use the **status trunk** command to determine the service state of the port. If the service state indicates that the port is in use, then the port is unavailable for certain tests. You must wait until the port is idle before retesting. 1. If the port status is active but the port is not in use (no calls), check the error log for error type 1025 (see the error log table for a description of this error and required actions). The port may be locked up. 2. If the port status is idle, retry the command at 1-minute intervals for a maximum of 5 times.
1002	ABORT	The test was aborted. The system could not allocate time slots for the test. The system may be under heavy traffic conditions, or it may have time slots out of service due to TDM-BUS errors. Refer to the TDM-BUS (TDM bus) maintenance documentation to diagnose any active TDM-BUS errors. 1. If the system has no TDM-BUS errors and is not handling heavy traffic and the port status is idle, retry the command at 1-minute intervals for a maximum of 5 times.

Continued on next page

Table 10-160. TEST #7 Conference Circuit Test — *Continued*

Error Code	Test Result	Description/Recommendation
1003	ABORT	The system could not allocate a tone receiver for the test. The system may be oversized for the number of tone detectors present or some of the tone detectors may be out of service. Issue the **list measurements tone-receiver** command to display basic information about the system's tone receivers. 1. Look for TTR-LEV errors in the error log. If present, refer to the TTR-LEV maintenance documentation. 2. Look for TONE-PT errors in the error log. If present, refer to the TONE-PT maintenance documentation. 3. If neither condition exists, retry the test at 1-minute intervals for a maximum of 5 times.
1004	ABORT	The port has been seized by a user for a valid call. Use the **status station** or **status trunk** command to determine when the port is available for testing. 1. Retry the command at 1-minute intervals a maximum of 5 times. 2. If the test continues to abort, and the port is not in use, escalate the problem.
1018	ABORT	The test was disabled via translation. You may want to determine why the test has been disabled before you enable it. 1. Verify that the 'Maintenance Test' field on the 'Trunk Administration' screen is set to 'n.' To enable the test, change the trunk administration and enter 'y' into the 'Maintenance Test' field. 2. Repeat the test.
1020	ABORT	The test did not run due to a previously existing error on the specific port or a more general circuit pack error. 1. Examine Error Log for existing errors against this port or the circuit pack and attempt to diagnose the previously existing error.

Continued on next page

Table 10-160. TEST #7 Conference Circuit Test — *Continued*

Error Code	Test Result	Description/Recommendation
2000	ABORT	Response to the test request was not received within the allowable time period.
2100	ABORT	System resources required for this test are not available. 1. Retry the command at 1-minute intervals a maximum of 5 times.
2053	ABORT	At least one of the following errors was found on the DS1 circuit pack: loss of signal (1281), blue alarm (1793), red alarm (2049), yellow alarm (2305), or hyperactivity (1537). 1. Look for the above error types in the Hardware Error Log and follow the procedures given in the appropriate DS1-BD or UDS1-BD maintenance documentation for the listed error types.

Continued on next page

Table 10-160. TEST #7 Conference Circuit Test — *Continued*

Error Code	Test Result	Description/Recommendation
Any	FAIL	1. Enter the **list configuration board PCSS** command. If the circuit pack is a TN767B vintage 8 or 9, replace the circuit pack with a TN767C V3 or later.The error log may have error type 1281 entries. 2. Test all administered trunks on the board. If one fails, this could be an off-board problem (such as an incoming seizure or an off-hook port seizure during the test). Retest the board. 3. If all of the ports fail, check the CARR-POW (see Note below). 4. If several ports fail, check the error log for TONE-BD or TONE-PT errors. If there are such errors, take the appropriate action. When the TONE errors have cleared, rerun the test. 5. If the retry passes and troubles have been reported, coordinate isolation with the CO. Make sure that the switch, the CO, and any NTCE equipment (the CSUs) have the correct administration. 6. Replace the circuit pack. **NOTE:** If the conference circuit test fails for all ports on a circuit pack, a -5 volt power problem is indicated. If a TN736 or TN752 power unit circuit pack is present, either the 631DB AC power unit or the 676B DC power unit may be defective. (The 631DB power unit is used in a medium cabinet powered by an AC source. The 645B power unit is used in a medium cabinet powered by a DC power source.) The system may contain a TN736 or TN752 power unit or a 631DB AC power unit, but not both types of power units. To investigate problems with a 631DB AC power unit, refer to the CARR-POW (carrier port power unit for AC-powered systems) Maintenance Documentation. To investigate problems with a 645B DC power unit, refer to the CARR-POW (carrier port power unit for DC-powered systems) Maintenance Documentation. If a red LED on TN736 or TN752 power unit circuit pack is on, replace the pack.
	PASS	The port can correctly conference multiple connections. User-reported troubles on this port should be investigated by using other port tests and by examining station, trunk, or external wiring.

Continued on next page

Table 10-160. TEST #7 Conference Circuit Test — *Continued*

Error Code	Test Result	Description/Recommendation
0	NO BOARD	The test could not relate the internal ID to the port (no board). This result could be due to incorrect translations, no board is inserted, an incorrect board is inserted, an insane board is inserted, or the board is hyperactive (see note below). 1. Check to ensure that the board translations are correct. Use the **list config** command, and resolve any problems that are found. 2. If the board was found to be correctly inserted in step 1, issue the **busyout board** command. 3. Issue the **reset board** command. 4. Issue the **release busy board** command. 5. Issue the **test board long** command. This should re-establish the linkage between the internal ID and the port. If this is not the case, dispatch to check to ensure that there is a valid board inserted. **NOTE:** Hyperactivity causes some special problems with the sequence suggested above.If the ports are translated after issuing the **list config** command but the 'Vintage' field reports that there is no board (when there really is a board), then the **busyout board** and the **release busy board** commands will not work (even though the **reset board** command will work). The software will put the hyperactive board back in service after the hyperactivity clears.

Port Audit and Update Test (#36)

This test sends port level translation data from switch processor to the DS1 Interface circuit pack to assure that the trunk's translation is correct. Translation updates include the following data: trunk type (in/out), dial type, timing parameters, and signaling bits enabled. The port audit operation verifies the consistency of the current state of trunk kept in the DS1 Interface circuit pack and in the switch software.

Table 10-161. TEST #36 Port Audit and Update Test

Error Code	Test Result	Description/Recommendation
	ABORT	Internal System Error. 1. Retry the command at 1-minute intervals a maximum of 5 times.
1000	ABORT	The test was aborted because system resources required to run this test were not available. The port may be busy with a valid call. Issue the **display port PCSSpp** command to determine the trunk group/member number of the port. Use the **status trunk** command to determine the service state of the port. If the service state indicates that the port is in use, then the port is unavailable for certain tests. You must wait until the port is idle before retesting. 1. If the port status is active but the port is not in use (no calls), check the error log for error type 1025 (see the error log table for a description of this error and required actions). The port may be locked up. 2. If the port status is idle, retry the command at 1-minute intervals for a maximum of 5 times.
2000	ABORT	Response to the test request was not received within the allowable time period.
2100	ABORT	Could not allocate the necessary system resources to run this test.

Continued on next page

Table 10-161. TEST #36 Port Audit and Update Test — *Continued*

Error Code	Test Result	Description/Recommendation
	FAIL	Test failed due to internal system error. 1. Retry the command at 1-minute intervals a maximum of 5 times.
	PASS	Trunk translation has been updated successfully. The current trunk states kept in the DS1 Interface circuit pack and switch software are consistent. If the trunk is busied out, the test does not run, but returns to PASS. To verify that the trunk is in-service: 1. Enter **status trunk** command to verify that the trunk is in-service. If the trunk is in-service, no further action is necessary. If the trunk is out-of-service, continue to Step 2. 2. Enter **release-trunk** command to put trunk back into in-service. 3. Retry the test command.
0	NO BOARD	The test could not relate the internal ID to the port (no board). This result could be due to incorrect translations, no board is inserted, an incorrect board is inserted, an insane board is inserted, or the board is hyperactive (see note below). 1. Check to ensure that the board translations are correct. Use the **list config** command, and resolve any problems that are found. 2. If the board was found to be correctly inserted in step 1, issue the **busyout board** command. 3. Issue the **reset board** command. 4. Issue the **release busy board** command. 5. Issue the **test board long** command. This should re-establish the linkage between the internal ID and the port. If this is not the case, dispatch to check to ensure that there is a valid board inserted. Hyperactivity causes some special problems with the sequence suggested above. If the ports are translated after issuing the **list config** command but the 'Vintage' field reports that there is no board (when there really is a board), then the **busyout board** and the **release busy board** commands will not work (even though the **reset board** command will work). The software will put the hyperactive board back in service after the hyperactivity clears.

DS1 CO Dial Tone Seizure Test (#314)

DS1CO Dial Tone Seizure Test checks the trunk's signaling capability provided by the DS1 Interface circuit pack. The maintenance software initiates the test by sending a "seizure" message to the DS1 Interface circuit pack and expects an "active" reply from the DS1 interface circuit pack. If the "active" message is received, then the test passes. If no message is received and the timer expires, the test is aborted. If the DS1 Interface circuit pack sends a "reorder" message back to maintenance software, then the test fails.

The test **CANNOT** be run on a trunk if one of the following cases is true:

a. The trunk direction is administered as an incoming only trunk.

b. The trunk has been seized by a normal trunk call.

c. The trunk is administered with maintenance test disabled.

Table 10-162. TEST #314 DS1CO Dial Tone Seizure Test

Error Code	Test Result	Description/Recommendation
	ABORT	Internal System Error. 1. Retry the command at 1-minute intervals a maximum of 5 times.
1000	ABORT	The test was aborted because system resources required to run this test were not available. The port may be busy with a valid call. Use the **display port PCSSpp** command to determine the trunk group/member number of the port. Use the **status trunk** command to determine the service state of the port. If the service state indicates that the port is in use, then the port is unavailable for certain tests. You must wait until the port is idle before retesting. 1. If the port status is active but the port is not in use (no calls), check the error log for error type 1025 (see the error log table for a description of this error and required actions). The port may be locked up. 2. If the port status is idle, retry the command at 1-minute intervals for a maximum of 5 times.
1004	ABORT	The test was aborted because the port was seized by a user for a valid call. Use the **display port PCSSpp** command to determine the trunk group/member number of the port. Use the **status trunk** command to determine the service state of the port. If the service state indicates that the port is in use, then the port is unavailable for certain tests. You must wait until the port is idle before retesting. 1. If the port status is idle, retry the command at 1-minute intervals for a maximum of 5 times.

Continued on next page

Table 10-162. TEST #314 DS1CO Dial Tone Seizure Test — *Continued*

Error Code	Test Result	Description/Recommendation
1005	ABORT	Test failed due to incompatible configuration administered in trunk group form. 1. Verify the following fields on the trunk group administration screen: Is trunk direction incoming only? Is trunk the port 24 of the DS1 Interface circuit pack while common control channel signaling is specified? Is trunk group type the automatic CO (for example, FX)? 2. If the trunk has been administered using the above information, then this test should abort.
1018	ABORT	The test is disabled via translation. You may want to determine why the test has been disabled before you enable it. 1. Verify that the 'Maintenance Test' field on the 'Trunk Group' form is set to 'n'. To enable the test, issue the **change trunk-group x** command (x equals the number of the trunk group to be tested). Then, change the entry in the 'Maintenance Test' field on the form to 'y'. 2. Repeat the test.
1020	ABORT	The DS1 Interface circuit pack is out-of-service. 1. Look for DS1-BD errors in the Hardware Error Log. If present, refer to DS1-BD (DS1 Trunk Circuit Pack) Maintenance documentation. 2. Retry the command.
1040	ABORT	The test was aborted because this port may be an access endpoint. 1. Verify that this port is an access endpoint by issuing the **display port** command. 2. If the port has been administered as an access endpoint, then this is a normal abort.
2000	ABORT	Response to the test request was not received within the allowable time period.
2012	ABORT	The test was aborted due to an internal system error.
2100	ABORT	Could not allocate the necessary system resources to run this test. 1. Retry the command at 1-minute intervals for a maximum of 5 times.

Continued on next page

Table 10-162. TEST #314 DS1CO Dial Tone Seizure Test — *Continued*

Error Code	Test Result	Description/Recommendation
	FAIL	The trunk cannot be seized for an outgoing call. This could cause in-line failures to be reported against the trunk (no answer would report error type 257 with auxiliary data 57487 in the error log). 1. Verify that the Trunk Type field on the trunk administration screen form matches the trunk type administered on far end switch. 2. Look for DS1-BD/UDS1-BD errors in Hardware Error Log. If present, refer to the appropriate DS1-BD/UDS1-BD (DS1/UDS1 Trunk Circuit Pack) Maintenance documentation. 3. Retry the test at 1-minute intervals for a maximum of 5 times.
2000	FAIL	Response to the seizure message was not received within the allowable time period. 1. Enter the **list configuration board PCSS** command. If the circuit pack is a TN767B vintage 8 or 9, a failure of test 314 causes a subsequent failure of test 7 due to a firmware bug. Eventually, the board and all of its ports will be taken out of service and extraneous on-board alarms will be generated. Replace the circuit pack with a TN767C V3 or later. 2. Verify that the 'Trunk Type' field on the 'Trunk Administration' screen matches the trunk type administered on far-end switch. 3. Look for DS1-BD or UDS1-BD errors in the hardware error log. If present, refer to the DS1-BD (DS1 trunk circuit pack) maintenance documentation or to the UDS1-BD (UDS1 trunk circuit pack) maintenance documentation. 4. Retry the test at 1-minute intervals for a maximum of 5 times.

Continued on next page

Table 10-162. TEST #314 DS1CO Dial Tone Seizure Test — *Continued*

Error Code	Test Result	Description/Recommendation
2053	FAIL	At least one of the following errors was found on the DS1 circuit pack: loss of signal (1281), blue alarm (1793), red alarm (2049), yellow alarm (2305), or hyperactivity (1537). 1. Look for these error types in the hardware error log and then follow the procedures given in the maintenance documentation that is appropriate for the error type that was found.
	PASS	The trunk can be seized for an outgoing call.
0	NO BOARD	The test could not relate the internal ID to the port (no board). This could be due to incorrect translations, no board is inserted, an incorrect board is inserted, an insane board is inserted, or the board is hyperactive (see Note below). 1. Check to ensure that the board translations are correct. Use the **list config** command, and resolve any problems that are found. 2. If the board was found to be correctly inserted in step 1, issue the **busyout board** command. 3. Issue the **reset board** command. 4. Issue the **release busy board** command. 5. Issue the **test board long** command. This should re-establish the linkage between the internal ID and the port. If this is not the case, dispatch to check to ensure that there is a valid board inserted. **NOTE:** Hyperactivity causes some special problems with the sequence suggested above. If the ports are translated after issuing the **list config** command but the 'Vintage' field reports that there is no board (when there really is a board), then the **busyout board** and the **release busy board** commands will not work (even though the **reset board** command will work). The software will put the hyperactive board back in service after the hyperactivity clears.

CO-TRK (CO Trunk)

MO Name (in Alarm Log)	Alarm Level	Initial Command to Run[1]	Full Name of MO
CO-TRK	MAJOR[2]	test port PCSSpp l	CO Trunk
CO-TRK	MINOR	test port PCSSpp l	CO Trunk
CO-TRK	WARNING	test port PCSSpp l	CO Trunk

1 Where P is the port network number (1 for PPN and 2 or 3 for EPN); c is the carrier designation (for example, A, B, C, D, or E); and SS is the address of the slot in the carrier where the circuit pack is located (for example, 01, 02,...etc.).

2 A MAJOR alarm on a trunk indicates that alarms on these trunks are not downgraded by the **set options** command and that at least 75 percent of the trunks in this trunk group are alarmed.

NOTE:
If ATMS testing is enabled, check the error log for ATMS Errors #3840 and #3841. If the error log indicates that measurements exceeded acceptable thresholds, and if no other trouble is found with the **test trunk** command, run the ATMS test call with the **test analog-testcall port PCSSpp full** command.

Central Office (CO) trunks are 2-wire analog lines to the CO which support both incoming and outgoing calls. A CO trunk circuit pack provides an interface between the 2-wire analog line from the CO and the system's (4-wire) Time Division Multiplex (TDM) Bus. The CO Trunk circuit packs include:

- TN747B (United States), 8 port loop start or ground start CO, foreign exchange (FX), or Wide Area Telecommunications (WATS) trunks.
- TN438B (Australia), 8 port loop start.
- TN447 (United Kingdom), 8 port ground start.
- TN465 (multiple countries), 8 port loop start.
- TN2138 (Italy), 8 port loop start.
- TN2147 (multiple countries), 8 port loop start and United Kingdom Earth Calling or Loop Calling Guarded Clearing.

LOOP START AND UK LOOP CALLING GUARDED CLEARING OPERATION

Idle State - Tip _ ground, Ring = CO Battery

A. Outgoing Call

1. PBX Off-Hook (Seize Message): Closes the Tip-Ring Loop
    a. CO Response: DC loop current + Dial tone
2. PBX On-Hook (Drop Message): Open Tip-Ring loop, no loop current
    a. CO Response: CO goes to idle state (see Note)

B. Incoming Call

1. CO Applies Ringing Voltage
    a. PBX Response: Detect ringing current
2. PBX Off-Hook (Answer Message): Close loop
    a. CO Response: Trip ringing, provide loop current
3. PBX On-Hook (Drop Message): Open Tip-Ring loop, no loop current
    a. CO Response: CO goes to idle state (see Note)

NOTE:
Except for the Netherlands Loop Start and UK Loop Calling Guarded Clearing trunks, CO does not normally provide an On-Hook (Disconnect) signal.

GROUND START AND UK EARTH CALLING OPERATION

Idle state - Tip _ open, Ring = CO Battery

A. Outgoing Call

1. PBX Off-Hook (Seize Message): Places ground on Ring
    a. CO Response: Places ground on Tip
    b. PBX Response: close the loop
    c. CO Response: provide loop current
    d. PBX response: dial out digits
2. PBX On-Hook first (Drop Message): Open the Tip-Ring Loop, no loop current
    a. CO Response: Open circuit on Tip
3. CO On-Hook first (Disconnect): Open circuit on Tip, no loop current.
    a. PBX Response: Open Tip-Ring loop

B. Incoming Call

1. CO Off-Hook (Seizure): CO applies ground on Tip, CO applies ringing voltage
    a. PBX Response: Detect ringing, ring destination
2. PBX Off-Hook (Answer Message): Close loop
    a. CO Response: Trip ringing, provide loop current
3. PBX On-Hook first (Drop Message): Open the Tip-Ring Loop, no loop current
    a. CO Response: Open circuit on Tip
4. CO On-Hook first (Disconnect): Open circuit on Tip, no loop current

Hardware Error Log Entries and Test to Clear Values

Table 10-163. CO Trunk Error Log Entries

Error Type	Aux Data	Associated Test	Alarm Level	On/ Off Board	Test to Clear Value
0[1]	0	Any	Any	Any	test port PCSSpp sh r 1
1 (a)	57347	None			
15 (b)	any	Port Audit Update Test (#36)			
18	0	busyout trunk <grp>/<mbr>	WARNING	OFF	release trunk <grp>/<mbr>
130(c)		None	WARNING	ON	test trunk <grp>/<mbr>
257 (a)	50176	None			
513 (a)	57364	None	MAJ/MIN/ WRN[2]	ON	
769 (a)	57392	None	MAJ/MIN/ WRN[2]	OFF	
1025 (e)	Any	Demand Diagnostic Test (#3)	MAJ/MIN/ WRN[2]	OFF	test port PCSS sh r 2
1281 (e)	Any	Demand Diagnostic Test (#3)	MAJ/MIN/ WRN[2]	ON	test port PCSS sh r 3
1537		Dial Tone Test (#0)	MAJ/MIN/ WRN[2]	OFF	test port PCSS l r 2
1793		Loop Around and Conference Test (#33)	MAJ/MIN/ WRN[2]	ON	test port PCSS l r 3

Continued on next page

Table 10-163. CO Trunk Error Log Entries — *Continued*

Error Type	Aux Data	Associated Test	Alarm Level	On/ Off Board	Test to Clear Value
2049		NPE Cross Talk Test (#6)	MAJ/MIN/ WRN[2]	ON	test port PCSS l r 3
2561 (d)	57345	None			
2817 (a)	57360	None			
2817 (a)	57393	None			
2817 (d)	57484	Dial Tone Test (#0)	MAJ/MIN/ WRN[2]	OFF	test port PCSS l r 1
3073 (d)	57376	None			
3329 (d)	57408	None			
3329 (d)	57484	Dial Tone Test (#0)	MAJ/MIN/ WRN[2]	OFF	test port PCSS l r 1
3585 (d)	57424	None			
3840 (f)	8000	Analog Transmission (#844-848)		OFF	
3841 (f)		Analog Transmission (#844-848)	MINOR	OFF	test analog testcall UUCSS pp r 2

1 Run the Short Test Sequence first. If all tests pass, run the Long Test Sequence. Refer to the appropriate test description and follow the recommended procedures.

2 Minor alarms on this MO may be downgraded to warning alarms based on the values used in the **set options** command. If the Minor alarm is not downgraded by the **set-options** values, the Minor alarm is upgraded to a Major alarm if 75 percent of the trunks in this trunk group are alarmed.

Notes:

a. These are in-line errors that have no specific test associated with them.

b. This is a software audit error that does not indicate any hardware malfunction. Run the Short Test Sequence and investigate associated errors (if any).

c. This error type indicates that the circuit pack has been removed or has been insane for more than 11 minutes. To clear the error, reinsert or replace the circuit pack.

d. Aux data 57345 -- Single polarity ringing current
Aux data 57376 -- No loop current on incoming call
Aux data 57408 -- No tip ground detected on outgoing call
Aux data 57424 -- No loop current on outgoing call
Aux data 57484 -- No dial tone on outgoing call

These errors cause the Dial Tone Test (#0) to run and are only considered a problem if the Dial Tone Test fails (in which case Error Type 1537 also shows up). In this case, the trunk may be put in “Ready-for-Service” state (shown as “disconnected” by status command), which allows only incoming calls. Run the Dial Tone Test (#0) and follow its outlined procedures.

If error count associated with this error type is very high (that is, 255) and if Alarm Status on the Hardware Error Report is “n” (not alarmed), then the existence of this error type indicates that, despite the fact that many in-line error messages have been received, all Call Seizure Tests have passed. Problems at the CO may cause this condition rather than problems with the PBX.

e. These errors are logged for all versions of the CO-TRK/CO-BD. However, no MINOR alarms are generated for Central Office Trunks [TN747B] with vintages V8 or greater. Any failures received by this test are still logged as Error type 1025/1281 as additional information for the system technician person.

   The system technician person should check for the use of MFT/Range extenders. If there are extenders present, and there are no other complaints or maintenance errors against this trunk, then there is a good chance that Test #3 failed due to excessive loop current and may be ignored.

f. Test calls made by the Automatic Transmission Measurement System (ATMS) returned measurements that were outside the acceptable limits. Use the **list testcall detail** command to examine specific transmission parameters that are out of spec, and investigate the trunk for that kind of noise. If the noise is acceptable, the limits administered on the “change trunk” screen should be changed.

Table 10-164. CO Trunk Errors with NO Tests

Error Type	Aux Data	Description and System Action	System Technician Action
1	57347	Port error. Ringing without ground. This error is detected on an incoming call on a ground-start CO trunk. The CO trunk circuit pack has not detected a Tip ground before ringing current is detected. This may indicate that the ground detector is not working. However, the call is accepted.	See Note 1 at end of table.

Continued on next page

Table 10-164. CO Trunk Errors with NO Tests — *Continued*

Error Type	Aux Data	Description and System Action	System Technician Action
257	50176	Battery reversal detected. This is usually caused by the CO (often seen with step-by-step and cross-bar offices in connection with outgoing calls). This is detected if the direction of the loop current changes from normal to reverse for at least 40 msec. Could occur if the trunk was just installed and for some reason the Tip and Ring wires were reversed at the PBX. If battery reversals occur during dialing, wrong numbers may result. The CO should be asked to remove the battery reversal option.	Refer problem to CO.
513	57364	Ground detector stuck active. After several occurrences, an on-board minor alarm is generated.	Run short test. If test aborts with Error Code 1000, disconnect Tip and Ring and repeat short test. If test still aborts, replace circuit pack. If test passes, refer problem to CO. If any other error code is received, pursue that problem.
769	57392	CO not releasing after call is dropped from PBX end (off-board alarm after several occurrences), or the loop is not open after a disconnect (on-board alarm after several occurrences).	For off-board alarm, refer problem to CO. For on-board alarm, the circuit pack has an on-board problem (for example, stuck relay) and should be replaced.
2561	57345	Single polarity ringing current. This error results from abnormal ringing current, but does not prevent the incoming call from being accepted. One cause could be that the reverse current detector associated with the port is failing. (Will not be detected by any tests.) Another cause could be that normal current is not detected. In this case, neither incoming nor outgoing calls can be completed, and the dial tone test also fails. The last cause could be that certain types of noise are present on the CO line during the silent period of ringing.	Check for other errors first and then see Note 4 at end of table.

Continued on next page

Table 10-164. CO Trunk Errors with NO Tests — *Continued*

Error Type	Aux Data	Description and System Action	System Technician Action
2817	57360	Ground but no ringing. This error occurs on an incoming call on a ground-start trunk. If ringing is not detected within 5 seconds of the Tip being grounded, the call is still accepted. If the CO is of the No. 5ESS. switch type, ringing delays of more than 5 seconds during heavy traffic are fairly common.	Check for other errors.
2817	57393	On the TN465, the loop is opening too slowly after a disconnect. This error indicates an on-board problem, although the trunk may be functional. On the TN2138, CO released the trunk at least 4 minutes after the PBX dropped the call. This error code is log-only and causes no other testing to occur. No alarm is generated.	Check for other errors.
3073	57376	No loop current on incoming call. The incoming destination has already answered and no loop current has been detected. If this is a hard fault, the dial tone test and all outgoing calls should also fail.	Check for other errors.
3329	57408	Trunk error. No Tip ground detected on outgoing call. This error occurs when an attempt is made to seize a ground-start CO trunk for an outgoing call and Tip ground is not detected or the caller hangs up before Tip ground is detected.	See Notes 1 and 2 at end of table.
3585	57424	No loop current on outgoing call. This error occurs on attempt to seize a loop or ground-start trunk for an outgoing call. An error occurs if loop current is not detected or the caller hangs up before it is detected.	See Note 3 at end of table.

Notes:

1. At the administration terminal, busyout the affected port, and run a Long Test Sequence. Observe the test results. If any tests fail, refer to the description of the tests and the associated error codes. Release the port. If users continue to report troubles, check for other errors and make test calls to determine whether the problem should be escalated or referred to the CO.
2. At the administration terminal, busyout the affected port, and run a Long Test Sequence. If Dial Tone Test #0 passes, ignore this error. Release the port.

3. At the administration terminal, busyout the affected port, and run a Long Test Sequence. If CO Demand Diagnostic Test #3 passes and this error keeps occurring, refer problems to CO. Release the port.
4. If the error count associated with this error type is very high (that is, 255) and all tests pass, then either the reverse current detector is defective or the CO line is noisy. If the CO line is suspected, Tip and Ring observations should be made. If the line is determined to be noisy, the problem should be referred to the CO. If the reverse current detector is defective, ignore this error.

System Technician-Demanded Tests: Descriptions and Error Codes

Always investigate tests in the order they are presented in the table below when inspecting errors in the system. By clearing error codes associated with the *NPE Crosstalk Test,* for example, you may also clear errors generated from other tests in the testing sequence.

For example, you may also clear errors generated from other tests in the testing sequence.

Order of Investigation	Short Test Sequence	Long Test Sequence	D/ND[1]
NPE Crosstalk Test (#6)		X	ND
Dial Tone Test (#0)		X	ND
CO Demand Diagnostic Test (#3) (a)	X	X	ND
Loop Around and Conference Test (#33)		X	ND
Audit Update Test (#36) Analog Transmission Test (#844-848) (b)	X (c)	X (c)	ND

1 D = Destructive; ND = Nondestructive

Notes:

a. A demand test of Diagnostic Test (#3) always returns a PASS indication for CO-TRK/CO-BD [TN747B] version 8 or greater. However, any errors produced as a result of this test are logged and produce no alarms.

   If errors logged by Test #3 are the only complaints against this trunk, then the system technician person should check if MFT/Range Extenders are being used. If extenders are present, then there is a good chance that there is excessive loop current, which causes Test #3 to log errors.

   However, all else being normal, these errors should not affect the customer.

b. Refer to TIE-TRK (Tie Trunk) Maintenance documentation for a description of this test.

c. ATMS test are not part of either sequence. They are run either on demand with the **test analog-testcall** command or via the ATMS schedule.

Dial Tone Test (#0)

This test attempts to seize a port and checks for the return of a dial tone.

Table 10-165. TEST #0 Dial Tone Test

Error Code	Test Result	Description/Recommendation
	ABORT	Could not allocate system resources to run this test. 1. Retry the command at 1-minute intervals a maximum of 5 times.
1000	ABORT	System resources required to run this test are not available. The port may be busy with a valid call. Use the command **display port PCSSpp** to determine the trunk group/member number of the port. Use the **status trunk** command to determine the service state of the port. If the service state indicates that the port is in use, then the port is unavailable for certain tests. (Refer to the “Status Commands” section in Chapter 10, “Maintenance Commands and Trouble-Clearing Aids”, for a full description of all possible states.) You must wait until the port is idle before retesting. 1. If the port status is idle, then retry the command at 1-minute intervals a maximum of 5 times.
1001	ABORT	System resources required to run this test were not available. This could be due to a failure to seize the port. 1. Retry the command at 1 minute intervals for a maximum of 5 times.
1002	ABORT	The system could not allocate time slots for the test. The system may be under heavy traffic conditions or it may have time slots out-of-service due to TDM-BUS errors. Refer to TDM-BUS (TDM Bus) Maintenance documentation to diagnose any active TDM-BUS errors. 1. If the system has no TDM-BUS errors and is not handling heavy traffic, repeat test at 1-minute intervals a maximum of 5 times.

Continued on next page

Table 10-165. TEST #0 Dial Tone Test — *Continued*

Error Code	Test Result	Description/Recommendation
1004	ABORT	The port was seized by a user for a valid call. Use the **display port PCSSpp** command to determine the trunk group/member number of the port. Use the **status trunk** command to determine the service state of the port. If the service state indicates that the port is in use, then the port is unavailable for certain tests. You must wait until the port is idle before retesting. 1. If the port status is idle, retry the command at 1 minute intervals for a maximum of 5 times.
1005	ABORT	Trunk has been administered as incoming-only; dial tone can only be obtained on outgoing trunks. This is a normal condition.
1018	ABORT	Test has been disabled via administration. 1. Verify that the “Maintenance Tests?” field on the Trunk Group Form is set to “n”. To enable the test, issue the **change trunk-group x** command where “x” equals the number of the trunk group to be tested. Then change the entry in the “Maintenance Tests?” field on the form to “y.”
2000	ABORT	Response to the test was not received within the allowable time period. 1. Retry the command at 1-minute intervals a maximum of 5 times.

Continued on next page

Table 10-165. TEST #0 Dial Tone Test — *Continued*

Error Code	Test Result	Description/Recommendation
	FAIL	Trunk was seized, but dial tone could not be detected. 1. Test all administered outgoing ports on the board. Failure of 1 indicates a problem toward the CO. 2. If all fail, see note below. 3. Check for errors on the TONE-BD or TONE-PT. Clear any errors found, and repeat the test. 4. If the error has still not cleared, refer the problem to the CO. 5. If no service problems exist on the port, continue to use the port until the circuit pack can be replaced (as a last resort). Perform a trunk test call to see if the trunk is operable. **NOTE:** If the dial tone test fails for all ports on a circuit pack, a -5 volt power problem is indicated. If a TN736 or TN752 power unit circuit pack is present, either the 631DB AC power unit or the 676B DC power unit may be defective. (The 631DB power unit is used in a medium cabinet powered by an AC source. The 645B power unit is used in a medium cabinet powered by a DC power source.) The system may contain a TN736 or TN752 power unit circuit pack or a 631DB AC power unit, but not both types of power units. To investigate problems with a 631DB AC power unit, refer to the CARR-POW (carrier port power unit for AC-powered systems) Maintenance documentation. To investigate problems with a 645B DC power unit, refer to the CARR-POW (carrier port power unit for DC-powered systems) Maintenance documentation.

Continued on next page

Table 10-165. TEST #0 Dial Tone Test — *Continued*

Error Code	Test Result	Description/Recommendation
2002	FAIL	Seizure portion of test failed due to hardware problem. Fault is usually caused by a disconnected trunk. 1. If the CO Demand Diagnostic Test (#3) also failed, display the Hardware Error Log. If the CO Demand Diagnostic Test failed because it could not detect ground (indicated by Error Type 1281 in the Hardware Error Log) AND Error Type 3329 or 3585 appears in the Hardware Error Log (with the same last occurred time as Error Type 1281 and 1537), replace the circuit pack. 2. Check trunk wiring to ensure good connection; repeat test if wiring correction made. 3. Locate another identical CO trunk and swap its wiring with one under test. Repeat test on both trunks and determine if problem follows trunk or remains at original port. If problem follows trunk, refer problem to CO. If problem remains at port, replace circuit pack and repeat test. 4. If replacing circuit pack does not clear failure, escalate the problem.
1009	PASS	Detected tone was not pure dial tone. [G1, G3iV1.1-286] No action required.
	PASS	Trunk was seized, and dial tone was detected. User-reported troubles on this port should be investigated by using other port tests and by examining trunk or external wiring.
0	NO BOARD	The test could not relate the internal ID to the port (no board). 1. Check to ensure that the board translations are correct. Translate the board, if necessary. 2. Issue the **busyout board** command. 3. Issue the **reset board** command. 4. Issue the **release busy board** command. 5. Issue the **test board** command. This should re-establish the linkage between the internal ID and the port.

CO Demand Diagnostic Test (#3)

For ground start trunks only, port circuit pack relays are operated and checks are made to see if the port can detect and apply ground on the Tip lead. This test also verifies that there is no external ground on the Ring lead. In the absence of other failures, the circuit pack should be replaced only if this test fails with the CO line disconnected.

For the TN2147 World Class Central Office circuit pack, this test also checks the on-board programmable transmission circuitry that allows the circuit pack to support the transmission characteristics of several countries.

Table 10-166. TEST #3 CO Demand Diagnostic Test

Error Code	Test Result	Description/Recommendation
	ABORT	Could not allocate system resources to run this test. 1. Retry the command at 1-minute intervals a maximum of 5 times.
1000	ABORT	System resources required to run this test are not available. The port may be busy with a valid call. Use the **display port PCSSpp** command to determine the trunk group/member number of the port. Use the **status trunk** command to determine the service state of the port. If the service state indicates that the port is in use, then the port is unavailable for certain tests. (Refer to the “Status Commands” section in Chapter 10, “Maintenance Commands and Trouble-Clearing Aids”, for a full description of all possible states.) You must wait until the port is idle before retesting. 1. If the port status is idle, then retry the command at 1-minute intervals a maximum of 5 times.
1004	ABORT	The port was seized by a user for a valid call. Use the **display port PCSSpp** command to determine the trunk group/member number of the port. Use the **status trunk** command to determine the service state of the port. If the service state indicates that the port is in use, then the port is unavailable for certain tests. You must wait until the port is idle before retesting. 1. If the port status is idle, retry the command at 1 minute intervals for a maximum of 5 times.
1005	ABORT	Test inapplicable to present configuration. This is a normal condition.
1018	ABORT	Test has been disabled via administration. 1. Verify that the “Maintenance Tests?” field on the Trunk Group Form is set to “n”. To enable the test, issue the **change trunk-group x** command where “x” equals the number of the trunk group to be tested. Then change the entry in the “Maintenance Tests?” field on the form to “y.”
2000	ABORT	Response to the request was not received within the allowable time period. 1. Retry the command at 1-minute intervals a maximum of 5 times.

Continued on next page

Table 10-166. TEST #3 CO Demand Diagnostic Test — *Continued*

Error Code	Test Result	Description/Recommendation
	FAIL	Failure to detect ground or faulty ground detected on Ring lead. Display the hardware errors for this trunk, to determine if the fault was on- or-off board. Look for Error Type 1025 or 1281 (if both appear in the Hardware Error Log, pick the most recent error). Error Type 1025 indicates a faulty ground detected on Ring lead (an off-board fault) and Error Type 1281 indicates failure to detect (internally generated) ground (an on-board fault). Faulty ground detected on Ring lead (Error Type 1025): **NOTE:** On TN747B vintage 8 and greater circuit packs, an incoming seizure during this test may cause it to fail with an off-board fault. 1. Repeat test. If test passes, ignore the original failure. If test aborts, follow the recommended procedures. 2. Repeat test with CO line removed. 3. If test fails, replace the circuit pack. 4. If test passes, refer problem to CO. Failure to detect ground (Error Type 1281): 1. Run the long test sequence. If the CO Demand Diagnostic Test fails, the Dial Tone Test (#0) fails with Error Code 2002, AND Error Type 3329 or 3585 appears in the Hardware Error Log (with the same last occurred time as Error Type 1281 and 1537), replace the circuit pack. 2. Repeat test with CO line removed. 3. If test fails, replace the circuit pack. 4. If test passes, the CO may be drawing too much current. Refer problem to CO.

Continued on next page

Table 10-166. TEST #3 CO Demand Diagnostic Test — *Continued*

Error Code	Test Result	Description/Recommendation
57481	FAIL	On-board test of programmable transmission circuitry failed. 1. Replace the circuit pack.
	PASS	This test verifies that the port is able to apply ground for outgoing calls and detect ground for incoming calls; however, it does not provide information on whether a CO line is actually connected. User-reported troubles on this port should be investigated by using other port tests and by examining trunk or external wiring.
0	NO BOARD	The test could not relate the internal ID to the port (no board). 1. Check to ensure that the board translations are correct. Translate the board, if necessary. 2. Issue the **busyout board** command. 3. Issue the **reset board** command. 4. Issue the **release busy board** command. 5. Issue the **test board** command. This should re-establish the linkage between the internal ID and the port.

NPE Crosstalk Test (#6)

One or more Network Processing Elements (NPEs) reside on each circuit pack with a TDM Bus interface. The NPE controls port connectivity and gain, and provides conferencing functions on a per port basis. The NPE Crosstalk Test verifies that this port's NPE channel talks on the selected time slot and never crosses over to time slots reserved for other connections. If the NPE is not working correctly, one way and noisy connections may be observed. This test is usually only part of a port's long test sequence and takes approximately 20 to 30 seconds to complete.

Table 10-167. TEST #6 NPE Crosstalk Test

Error Code	Test Result	Description/Recommendation
	ABORT	Could not allocate the necessary system resources to run this test. 1. Retry the command at 1-minute intervals a maximum of 5 times.
1000	ABORT	The port was seized by a user for a valid call. Use the **display port PCSSpp** command to determine the trunk group/member number of the port. Use the **status trunk** command to determine the service state of the port. If the service state indicates that the port is in use, then the port is unavailable for certain tests. You must wait until the port is idle before retesting. 1. If the port status is active but the port is not in use (no calls), check the error log for error type 1025 (see the Error Log table for a description of this error and required actions). The port may be locked up. Check the CO wiring, check for excessive loop current, and check the trunk translations. (If the trunk is translated incorrectly, this test will abort.) 2. If the port status is idle, busyout and release the trunk, and then retry the command at 1 minute intervals for a maximum of 5 times. 3. If the test still aborts, replace the circuit pack.
1001	ABORT	Could not allocate the necessary system resources to run this test. 1. Retry the command at 1-minute intervals a maximum of 5 times.

Continued on next page

Table 10-167. TEST #6 NPE Crosstalk Test — *Continued*

Error Code	Test Result	Description/Recommendation
1002	ABORT	The system could not allocate time slots for the test. The system may be under heavy traffic conditions or it may have time slots out-of-service due to TDM-BUS errors. Refer to TDM-BUS (TDM-Bus) Maintenance documentation to diagnose any active TDM-BUS errors. 1. If system has no TDM-BUS errors and is not handling heavy traffic, repeat test at 1-minute intervals a maximum of 5 times.
1003	ABORT	The system could not allocate a tone receiver for the test. The system may be oversized for the number of tone detectors present or some tone detectors may be out-of-service. 1. Look for TTR-LEV errors in the Error Log. If present, refer to TTR-LEV Maintenance documentation. 2. Look for TONE-PT errors in the Error Log. If present, refer to TONE-PT Maintenance documentation. 3. If neither condition exists, retry the test at 1-minute intervals a maximum of 5 times.

Continued on next page

Table 10-167. TEST #6 NPE Crosstalk Test — *Continued*

Error Code	Test Result	Description/Recommendation
1004	ABORT	The port was seized by a valid call during the test. The test has been aborted. Use the **display port PCSSpp** command to determine the trunk group/member number of the port. Use the **status trunk** command to determine the service state of the port. If the service state indicates that the port is in use, then the port is unavailable for certain tests. (Refer to the "Status Commands" section in Chapter 10, "Maintenance Commands and Trouble-Clearing Aids", for a full description of all possible states.) You must wait until the port is idle before retesting.
2000	ABORT	Response to the test request was not received within the allowable time period.
2100	ABORT	Could not allocate the necessary system resources to run this test. 1. Retry the command at 1-minute intervals a maximum of 5 times.
Any	FAIL	The NPE of the tested port was found to be transmitting in error. This causes noisy and unreliable connections. 1. Replace the circuit pack.
	PASS	The port is correctly using its allocated time slots. User-reported troubles on this port should be investigated by using other port tests and by examining trunk or external wiring.
0	NO BOARD	The test could not relate the internal ID to the port (no board). 1. Check to ensure that the board translations are correct. Translate the board, if necessary. 2. Issue the **busyout board** command. 3. Issue the **reset board** command. 4. Issue the **release busy board** command. 5. Issue the **test board** command. This should re-establish the linkage between the internal ID and the port.

Loop Around and Conference Circuit Test (#33)

This test checks the reflective loop around and conference capabilities of a CO port circuit. The test uses 404-Hz, 1004-Hz, and 2804-Hz tones. Each tone is transmitted separately through the loop and checked.

Table 10-168. TEST #33 Loop Around and Conference Circuit Test

Error Code	Test Result	Description/Recommendation
	ABORT	Could not allocate the necessary system resources to run this test.
7	ABORT	Conference Circuit Test aborted.
129	ABORT	The 404-Hz reflective loop around test aborted. Response to the test request was not received within the allowable time period.
131		The 1004-Hz reflective loop around test aborted. Response to the test request was not received within the allowable time period.
133		The 2804-Hz reflective loop around test aborted. Response to the test request was not received within the allowable time period. 1. Retry the command at 1 minute intervals a maximum of 5 times.
1000	ABORT	System resources required to run this test are not available. The port may be busy with a valid call. Use the **display port PCSSpp** command to determine the trunk group/member number of the port. Use the **status trunk** command to determine the service state of the port. If the service state indicates that the port is in use, then the port is unavailable for certain tests. You must wait until the port is idle before retesting. 1. If the port status is active but the port is not in use (no calls), check the error log for error type 769 (see the Error Log table for a description of this error and required actions). The port may be locked up. 2. If the port status is idle, retry the command at 1 minute intervals for a maximum of 5 times.

Continued on next page

Table 10-168. TEST #33 Loop Around and Conference Circuit Test — *Continued*

Error Code	Test Result	Description/Recommendation
1002	ABORT	The system could not allocate time slots for the test. The system may be under heavy traffic conditions or it may have time slots out-of-service due to TDM-BUS errors. Refer to TDM-BUS Maintenance to diagnose any active TDM-BUS errors. 1. If system has no TDM-BUS errors and is not handling heavy traffic, repeat test at 1-minute intervals a maximum of 5 times.
1003	ABORT	The system could not allocate a tone receiver for the test. The system may be oversized force. 1. Look for TTR-LEV errors in the Error Log. If present, refer to TTR-LEV Maintenance documentation. 2. Look for TONE-PT errors in the Error Log. If present, refer to TONE-PT Maintenance documentation. 3. If neither condition exists, retry the command at 1-minute intervals a maximum of 5 times.
1004	ABORT	System resources required to run this test are not available. The port may be busy with a valid call. Use the **display port PCSSpp** command to determine the trunk group/member number of the port. Use the **status trunk** command to determine the service state of the port. If the service state indicates that the port is in use, then the port is unavailable for certain tests. You must wait until the port is idle before retesting. 1. If the port status is idle, retry the command at 1 minute intervals for a maximum of 5 times.
1018	ABORT	The test was disabled via administration. Verify that the 'Maintenance Test' field on the 'Trunk Group' form is set to 'n'. To enable the test, issue the 'change trunk-group x' command (x equals the number of the trunk group to be tested). Then, change the entry in the 'Maintenance Test' field on the form to 'y'. 1. Retry the command at 1 minute intervals a maximum of 5 times.
2000	ABORT	Response to the test was not received within the allowable time period.
2100	ABORT	Could not allocate the necessary system resources to run this test. 1. Retry the command at 1-minute intervals a maximum of 5 times.

Continued on next page

Table 10-168. TEST #33 Loop Around and Conference Circuit Test — *Continued*

Error Code	Test Result	Description/Recommendation
7,	FAIL	The conference capabilities of the port failed (Error Code 7).
129,		The reflective 404-Hz Tone Test failed. No transmission was detected to or from the port (Error Code 129).
131, or		The reflective 1004-Hz Tone Test failed. No transmission was detected to or from the port (Error Code 131).
133		The reflective 2804-Hz Tone Test failed. No transmission was detected to or from the port (Error Code 133). FAULT ISOLATION: Proceed as follows unless power or tone problems are suspected (see notes on the next page). 1. To make sure the problem is on-board, disconnect the port from the CO and retry the test. Coordinate this with the CO, or do it after busy hours; otherwise, the CO may put the connection out of service. 2. If the retry fails, replace the circuit pack. 3. If the retry passes and no troubles have been reported, disable the test. If the retry passes and troubles have been reported, refer the problem to the CO. **NOTE:** If the loop around and conference circuit test fails for all ports on a circuit pack, a -5 volt power problem is indicated. If a TN736 or TN752 power unit circuit pack is present, either the 631DB AC power unit or the 676B DC power unit may be defective. (The 631DB power unit is used in a medium cabinet powered by an AC source. The 645B power unit is used in a medium cabinet powered by a DC power source.) The system may contain a TN736 or TN752 power unit circuit pack or a 631DB AC power unit, but not both types of power units. To investigate problems with a 631DB AC power unit, refer to the CARR-POW (carrier port power unit for AC-powered systems) Maintenance documentation. To investigate problems with a 645B DC power unit, refer to the CARR-POW (carrier port power unit for DC-powered systems) Maintenance documentation. If a red LED on TN736 or TN752 power unit circuit pack is on, replace the pack. If the test fails on more than 1 port, check for errors on the TONE-BD or the TONE-PT. If errors, take appropriate actions. When the tone errors are cleared, rerun the test. If the test fails again, see FAULT ISOLATION above.

Continued on next page

Table 10-168. TEST #33 Loop Around and Conference Circuit Test — *Continued*

Error Code	Test Result	Description/Recommendation
	PASS	CO Trunk Loop Around and Conference Test is successful. User-reported troubles on this port should be investigated by using other port tests and by examining trunk or external wiring.
0	NO BOARD	The test could not relate the internal ID to the port (no board). 1. Check to ensure that the board translations are correct. Translate the board, if necessary. 2. Issue the **busyout board** command. 3. Issue the **reset board** command. 4. Issue the **release busy board** command. 5. Issue the **test board** command. This should re-establish the linkage between the internal ID and the port.

Port Audit Update Test (#36)

This test sends updates of the CO port translation for all ports on the circuit pack that have been translated. The update is non-disruptive and guards against possible corruption of translation data contained on the circuit pack. No response message is expected from the circuit pack once it receives translation updates. The port translation data includes: ground or loop start trunk, tone or rotary dialing trunk, rotary dialing inter-digit timing, network balance R/RC, and disconnect timing.

Table 10-169. TEST #36 Port Audit Update Test

Error Code	Test Result	Description/Recommendation
	ABORT	Could not allocate the necessary system resources to run this test. 1. Retry the command at 1-minute intervals a maximum of 5 times.

Continued on next page

Table 10-169. TEST #36 Port Audit Update Test — *Continued*

Error Code	Test Result	Description/Recommendation
1006	ABORT	The port has been placed out of service, perhaps by craft busyout. Use the **display port PCSSpp** command to determine the trunk group/member number of the port. Use the **status trunk** command to determine the service state of the port. If the service state indicates that the port is in use, then the port is unavailable for certain tests. You must wait until the port is idle before retesting. 1. If the port status is idle, retry the command at 1 minute intervals for a maximum of 5 times.
2100	ABORT	System resources required to run this test were not available. 1. If the port status is idle, retry the command at 1 minute intervals for a maximum of 5 times.
	FAIL	Internal system error. 1. Retry the command at 1-minute intervals a maximum of 5 times.
	PASS	This test passed. Translation information was successfully updated on the circuit pack. User-reported troubles on this port should be investigated by using other port tests and by examining trunk or external wiring. If the trunk is busied out, the test does not run, but returns PASS. To verify that the trunk is in-service: 1. Enter **status-command** to verify that the trunk is in-service. If the trunk is in-service, no further action is necessary. If the trunk is out-of-service, continue to Step 2. 2. Enter **release-trunk** command to put trunk back into in-service. 3. Retry the test command.
0	NO BOARD	The test could not relate the internal ID to the port (no board). 1. Check to ensure that the board translations are correct. Translate the board, if necessary. 2. Issue the **busyout board** command. 3. Issue the **reset board** command. 4. Issue the **release busy board** command. 5. Issue the **test board** command. This should re-establish the linkage between the internal ID and the port.

Transmission Test (#844-848)

This test is non-destructive.

NOTE:
Tests #844-848 are not supported on a International switch.

These tests are run by the Automatic Transmission Measurement System (ATMS). They are not part of the long or short trunk test sequences. Instead, they are run on demand with the **test analog-testcall** command or as part of ATMS scheduled testing.

The test call is run from an analog port on a TN771 Maintenance/Test circuit pack. It attempts to seize a port and make a call to a terminating test line (TTL) on the trunk's far end. Transmission performance measurements are made and compared to administered thresholds. Errors are generated when results fall outside of "marginal" or "unacceptable" thresholds. Detail and summary measurement reports are obtainable via the **list testcalls** command.

Table 10-170. TEST #844-848 Transmission Test

Error Code	Test Result	Description/Recommendation
1000	ABORT	System resources required to run this test are not available. The port may be busy with a valid call. Use **display port PCSSpp** to determine the trunk group/member number of the port. Use the "status trunk" command to determine the service state of the port. If the service state indicates that the port is in use, then the port unavailable for this test. (Refer to the "Status Commands" section in Chapter 10, "Maintenance Commands and Trouble-Clearing Aids" for a full description all possible states). You must wait until the port is idle before retesting. 1. If the port status is idle, then retry the command at 1 minute intervals for a maximum of 5 retries.
1001	ABORT	Could not allocate the necessary system resources to run this test. 1. Retry the command at 1 minute intervals for a maximum of 5 retries.
1002	ABORT	The system could not allocate timeslots for the test. The system may be under heavy traffic conditions or it may have timeslots out of service due to TDM bus errors. Refer to TDM Bus Maintenance to diagnose any active TDM bus errors. 1. If system has no TDM bus errors and is not handling heavy traffic, repeat test at 1 minute intervals for a maximum of 5 retries.

Continued on next page

Table 10-170. TEST #844-848 Transmission Test — *Continued*

Error Code	Test Result	Description/Recommendation
1004	ABORT	The port has been seized by a user for a valid call. Use status trunk to determine when the port is available for testing. 1. Retry the command at 1 minute intervals for a maximum of 5 retries. 2. If the test continues to abort and the port is not in use, escalate the problem.
1005	ABORT	Trunk has been administered as incoming-only; transmission tests can only be run on outgoing trunks.
1115	ABORT	The near end test line on the TN771 circuit pack could not be allocated. 1. Verify that the TN771 circuit pack is in service and that port 1 is administered and in service with the **status port** command. 2. Retry the command at 1-minute intervals for a maximum of 5 times.
1900	ABORT	The test completion message was not received from the TN771 circuit pack. 1. Test the TN771 circuit packs.
1901	ABORT	This error occurs when the TN771 circuit pack uplinks a message that is not the proper response for this test. The anticipated uplink messages are seize, ring or answer. 1. Verify that the Trunk is administered properly.
1905	ABORT	Intercept tone detected from far end. 1. Get the test line data and verify it with the far end. Dial the test number manually to see if the TTL is reached. If it is not, then either the number is wrong, or the far end is administered incorrectly.
1906	ABORT	Reorder tone detected from far end. 1. See actions for error code 1905.
1907	ABORT	Other unexpected tone detected from far end. 1. See actions for error code 1905.
1913	ABORT	Audible Ring detected from far end. 1. See actions for error code 1905.
1914	ABORT	Unidentified interrupted tone detected from far end. 1. See actions for error code 1905

Continued on next page

Table 10-170. TEST #844-848 Transmission Test — *Continued*

Error Code	Test Result	Description/Recommendation
1915	ABORT	Busy tone detected from far end. 1. Since the test line at the far end was busy. Try the test again. 2. If the test continues to abort, the problem is with the far end system.
1918	ABORT	Test progress tone not removed from far end (type 105 test line only). 1. The problem is with the far end system; a technician at the far end should test the test line (TN771 or ADFTC).
1919	ABORT	Unexpected far end release 1. The problem is with the far end system; a technician at the far end should test the test line (TN771 or ADFTC).
1920	ABORT	No response from far end. 1. The problem is with the far end system; a technician at the far end should test the test line (TN771 or ADFTC).
1921	ABORT	No data returned from far end. 1. The problem is with the far end system; a technician at the far end should test the test line (TN771 or ADFTC).
1922	ABORT	Steady, unidentifiable tone from far end 1. See actions for error code 1905.
1923	ABORT	Broadband energy detected from far end (such as voice or announcement). 1. See actions for error code 1905.
1924	ABORT	No test tone from far end 1. See actions for error code 1905.
1938	ABORT	Near-end self test failed. 1. Test the TN771 circuit packs.
1939	ABORT	Loss self check at 0dBm at 1004 Hz failed. 1. Test the TN771 circuit packs.
1940	ABORT	Far end noise self check failed. 1. The problem is with the far end system; a technician at the far end should test the test line (TN771 or ADFTC).
1941	ABORT	High frequency singing return loss self check failed. 1. Test the TN771 circuit packs.

Continued on next page

Table 10-170. TEST #844-848 Transmission Test — *Continued*

Error Code	Test Result	Description/Recommendation
1942	ABORT	Echo return loss self check failed. 1. Test the TN771 circuit packs.
1943	ABORT	Singing return loss self check failed. 1. Test the TN771 circuit packs.
1944	ABORT	Loss self check at -16 dBm at 1004 Hz failed. 1. Test the TN771 circuit packs
1945	ABORT	Loss self check at -16 dBm at 404 Hz failed. 1. Test the TN771 circuit packs.
1946	ABORT	Loss self check at -16 dBm at 2804 Hz failed. 1. Test the TN771 circuit packs.
1947	ABORT	Noise with tone self check failed. 1. Test the TN771 circuit packs.
2000	ABORT	The test timed out while waiting for a response from the TN771 circuit pack. 1. Retry the command at 1 minute intervals for a maximum of 5 retries.
2012	ABORT	An internal software error occurred. 1. Retry the command at 1 minute intervals for a maximum of 5 retries.
2053	ABORT	The test call could not be established, but no information on why is available. 1. Retry the command at 1 minute intervals for a maximum of 5 retries.

Continued on next page

Table 10-170. TEST #844-848 Transmission Test — *Continued*

Error Code	Test Result	Description/Recommendation
2056	ABORT	An error occurred while trying to obtain results from the TN771 circuit pack. 1. Test the TN771 circuit packs.
	FAIL	Measured transmission performance was in the unacceptable range as administered on the trunk group form. Retrieve a measurement report via the **list testcalls** command. Make sure that ATMS thresholds are set properly on page 4 of the trunk group form. Besides the facility, test failures can be caused by faulty test lines or switch paths. If the measurements point to a facility problem, report the results to the trunk vendor.
8000	FAIL	Measured transmission performance was in the marginal range as administered on the trunk group form. This generally means that the trunk is usable but has an undesirable amount of noise or loss. If the user does not report unacceptable effects, it may not be necessary to take any action. Retrieve a measurement report via the **list testcalls** command. Make sure that ATMS thresholds are set properly on page 4 of the trunk group form.

CONFIG (System Configuration)

MO Name (in Alarm Log)	Alarm Level	Initial Command to Run	Full Name of MO
CONFIG	none	none	System Configuration

The System Configuration maintenance object (MO) oversees logical insertion and removal of circuit packs in the system. When Switch Control detects that a circuit pack is present in a port slot, it informs System Configuration and System Configuration queries the circuit pack to determine the type and vintage of the circuit pack. Similarly, when Switch Control detects that a circuit pack has been removed from a port slot, it informs System Configuration.

There are no alarms or tests for System Configuration, but three types of errors are logged to the Hardware Error Log (see below).

Hardware Error Log Entries and Test to Clear Values

System Configuration Error Log Entries

Error Type	Aux Data	Associated Test	Alarm Level	On/Off Board	Test to Clear Value
0[1]	0	Any	Any	Any	none
2-117(a)	0-2	none			
257(b)		none			
1002-1117(c)	0-2	none			

1 Run the Short Test Sequence first. If all tests pass, run the Long Test Sequence. Refer to the appropriate test description and follow the recommended procedures.

Notes:

a. This error indicates that a Port circuit pack in the system did not respond to a circuit pack type inquiry. Follow the procedures outlined in (b) to determine if there is an error.

b. This error indicates that less than 25% of Trunk Group is available.

c. This error indicates that a Port circuit pack in the system did not respond to a vintage inquiry.

As a result of either of these errors, a Port circuit pack may be physically inserted in a Port slot, but the system may not recognize its existence. The Error Type and Aux Data fields specify the location of the port circuit pack that caused the error as indicated in Table 10-100. If the Error Type field is greater than 1000, subtract 1000 from the Error Type field before consulting the table.

If more than one CONFIG error is logged with an Aux Data of 1 at the same time, investigate any EXP-INTF (Expansion Interface) errors before proceeding.

Once the Port circuit pack location has been determined from Table 10-171, use the **list configuration all** command to determine if the circuit pack is inserted. If not, insert the pack. If the circuit pack has already been inserted but the error persists, replace the circuit pack.

Table 10-171. System Configuration Error Log Entries

Error Type	Aux Data	Port Circuit Pack Location
1	0	GAMUT Circuit Pack[1]
1	1	GAMUT Circuit Pack[1]
2	0	1E01
2	1	2E01
2	2	3E01
3	0	1E02
3	1	2E02
3	2	3E02
4	0	1E03
4	1	2E03
4	2	3E03
5	0	1E04
5	1	2E04
5	2	3E04
6	0	1E05
6	1	2E05
6	2	3E05
7	0	1E06
7	1	2E06
7	2	3E06
8	0	1E07
8	1	2E07
8	2	3E07
9	0	1E08
9	1	2E08

Continued on next page

Table 10-171. System Configuration Error Log Entries — *Continued*

Error Type	Aux Data	Port Circuit Pack Location
9	2	3E08
10	0	1E09
10	1	2E09
10	2	3E09
11	0	1E10
11	1	2E10
11	2	3E10
12	0	1E11
12	1	2E11
12	2	3E11
13	0	1E12
13	1	2E12
13	2	3E12
14	0	1E13
14	1	2E13
14	2	3E13
15	0	1E14
15	1	2E14
15	2	3E14
16	0	1E15
16	1	2E15
16	2	3E15
17	0	1E16
17	1	2E16
17	2	3E16
18	0	1E17
18	1	2E17
18	2	3E17
19	0	1E18
19	1	2E18

Continued on next page

Table 10-171. System Configuration Error Log Entries — *Continued*

Error Type	Aux Data	Port Circuit Pack Location
19	2	3E18
20	0	1E19
20	1	2E19
20	2	3E19
21	0	1E20
21	1	2E20
21	2	3E20
24	0	1B Network Control
25	0	1B Network Control
26	0	1A Network Control
26	1	Maintenance Circuit Pack
27	0	1A Network Control
27	1	2A Tone-Clock
28	0	1A Tone-Clock
28	1	2A01
28	2	3A01
29	0	1A Tone-Clock
29	1	2A02
29	2	3A02
30	0	1A01
30	1	2A03
30	2	3A03
31	0	1A02
31	1	2A04
31	2	3A04
32	0	1A2 Processor Interface
33	0	1B2 Processor Interface
34	0	1D01
34	1	2D01
34	2	3D01

Continued on next page

Table 10-171. System Configuration Error Log Entries — *Continued*

Error Type	Aux Data	Port Circuit Pack Location
35	0	1D02
35	1	2D02
35	2	3D02
36	0	1D03
36	1	2D03
36	2	3D03
37	0	1D04
37	1	2D04
37	2	3D04
38	0	1D05
38	1	2D05
38	2	3D05
39	0	1D06
39	1	2D06
39	2	3D06
40	0	1D07
40	1	2D07
40	2	3D07
41	0	1D08
41	1	2D08
41	2	3D08
42	0	1D09
42	1	2D09
42	2	3D09
43	0	1D10
43	1	2D10
43	2	3D10
44	0	1D11
44	1	2D11
44	2	3D11

Continued on next page

Table 10-171. System Configuration Error Log Entries — *Continued*

Error Type	Aux Data	Port Circuit Pack Location
45	0	1D12
45	1	2D12
45	2	3D12
46	0	1D13
46	1	2D13
46	2	3D13
47	0	1D14
47	1	2D14
47	2	3D14
48	0	1D15
48	1	2D15
48	2	3D15
49	0	1D16
49	1	2D16
49	2	3D16
50	0	1D17
50	1	2D17
50	2	3D17
51	0	1D18
51	1	2D18
51	2	3D18
52	0	1D19
52	1	2D19
52	2	3D19
53	0	1D20
53	1	2D20
53	2	3D20
56	0	1A03
56	1	2A05
56	2	3A05

Continued on next page

Table 10-171. System Configuration Error Log Entries — *Continued*

Error Type	Aux Data	Port Circuit Pack Location
57	0	1A04
57	1	2A06
57	2	3A06
58	0	1A05
58	1	2A07
58	2	3A07
59	0	1A06
59	1	2A08
59	2	3A08
60	0	1A07
60	1	2A09
60	2	3A09
61	0	1A08
61	1	2A10
61	2	3A10
62	0	1A09
62	1	2A11
62	2	3A11
63	0	1A10
63	1	2A12
63	2	3A12
66	0	1B01
66	1	2B01
66	2	3B01
67	0	1B02
67	1	2B02
67	2	3B02
68	0	1B03
68	1	2B03
68	2	3B03

Continued on next page

Table 10-171. System Configuration Error Log Entries — *Continued*

Error Type	Aux Data	Port Circuit Pack Location
69	0	1B04
69	1	2B04
69	2	3B04
70	0	1B05
70	1	2B05
70	2	3B05
71	0	1B06
71	1	2B06
71	2	3B06
72	0	1B07
72	1	2B07
72	2	3B07
73	0	1B08
73	1	2B08
73	2	3B08
74	0	1B09
74	1	2B09
74	2	3B09
75	0	1B10
75	1	2B10
75	2	3B10
76	0	1B11
76	1	2B11
76	2	3B11
77	0	1B12
77	1	2B12
77	2	3B12
78	0	1B13
78	1	2B13
78	2	3B13

Continued on next page

Table 10-171. System Configuration Error Log Entries — *Continued*

Error Type	Aux Data	Port Circuit Pack Location
79	0	1B14
79	1	2B14
79	2	3B14
80	0	1B15
80	1	2B15
80	2	3B15
81	0	1B16
81	1	2B16
81	2	3B16
82	0	1B17
82	1	2B17
82	2	3B17
83	0	1B18
83	1	2B18
83	2	3B18
84	0	1B19
84	1	2B19
84	2	3B19
85	0	1B20
85	1	2B20
85	2	3B20
88	1	2A13
88	2	3A13
89	1	2A14
89	2	3A14
90	1	2A15
90	2	3A15
91	1	2A16
91	2	3A16
92	1	2A17

Continued on next page

Table 10-171. System Configuration Error Log Entries — *Continued*

Error Type	Aux Data	Port Circuit Pack Location
92	2	3A17
93	0	1B Tone-Clock
93	1	2A18
93	2	3A18
94	0	1A1 Processor Interface
94	1	2A19
94	2	3A19
95	0	1B1 Processor Interface
98	0	1C01
98	1	2C01
98	2	3C01
99	0	1C02
99	1	2C02
99	2	3C02
100	0	1C03
100	1	2C03
100	2	3C03
101	0	1C04
101	1	2C04
101	2	3C04
102	0	1C05
102	1	2C05
102	2	3C05
103	0	1C06
103	1	2C06
103	2	3C06
104	0	1C07
104	1	2C07
104	2	3C07
105	0	1C08

Continued on next page

Table 10-171. System Configuration Error Log Entries — *Continued*

Error Type	Aux Data	Port Circuit Pack Location
105	1	2C08
105	2	3C08
106	0	1C09
106	1	2C09
106	2	3C09
107	0	1C10
107	1	2C10
107	2	3C10
108	0	1C11
108	1	2C11
108	2	3C11
109	0	1C12
109	1	2C12
109	2	3C12
110	0	1C13
110	1	2C13
110	2	3C13
111	0	1C14
111	1	2C14
111	2	3C14
112	0	1C15
112	1	2C15
112	2	3C15
113	0	1C16
113	1	2C16
113	2	3C16
114	0	1C17
114	1	2C17
114	2	3C17
115	0	1C18

Continued on next page

Table 10-171. System Configuration Error Log Entries — *Continued*

Error Type	Aux Data	Port Circuit Pack Location
115	1	2C18
115	2	3C18
116	0	1C19
116	1	2C19
116	2	3C19
117	0	1C20
117	1	2C20
117	2	3C20
other	-	Unknown Circuit Pack

1 Development Laboratory only

CUST-ALM (Customer-Provided Alarming Device)

MO Name (in Alarm Log)	Alarm Level	Initial Command to Run[1]	Full Name of MO
CUST-ALM	none	test customer-alarm PC	Customer-Provided Alarming Device

1 Where PC is an appropriate port network number and carrier (for a High or Critical Reliability system, specify 1a or 1b).

The system provides customers a way to connect their own alarm indication device to a switch. The CUST-ALM maintenance object represents this Customer-Provided Alarming Device (CPAD). When an alarm occurs at least to the level to which the CPAD is administered, the CPAD in the Processor Port Network (PPN) and in the Expansion Port Network (EPN) are activated. The CPAD is administered by the Maintenance-Related System Parameters Form (CPE Alarm Activation Level field). The CPAD is connected to the Maintenance/Tape Processor in the PPN (in a High or Critical Reliability system, the CPAD is connected to both Maintenance/Tape Processors) and to the EPN Maintenance circuit pack in the EPN. The valid levels to which to set the CPE Alarm Activation Level are: *none, warning, minor,* or *major.* The CPAD is also activated within a cabinet whenever Emergency Transfer is invoked within that cabinet. The CUST-ALM MO is not maintained by the system, and does not generate any alarms. If a problem is suspected with the CPAD, it may be tested using the **test customer-alarm** command, which activates the device by closing the relay on either the Maintenance/Tape Processor or the EPN Maintenance circuit pack (whichever is specified) for 1 minute. In a High or Critical Reliability system, the CPAD on the PPN is connected to the Maintenance/Tape Processor on both carrier A and carrier B, and the **test customer-alarm** command can specify which Maintenance/Tape Processor should close its relay. The repeat parameter may be used to close the relay for a longer length of time (5 minutes is the suggested repeat value).

The CPAD is also activated within a cabinet whenever Emergency Transfer is invoked within that cabinet. The CUST-ALM MO is not maintained by the system, and does not generate any alarms. If a problem is suspected with the CPAD, it may be tested using the **test customer-alarm** command, which activates the device by closing the relay on either the Maintenance/Tape Processor or the EPN Maintenance circuit pack (whichever is specified) for 1 minute. In a High or Critical Reliability system, the CPAD on the PPN is connected to the Maintenance/Tape Processor on both carrier A and carrier B, and the **test customer-alarm** command can specify which Maintenance/Tape Processor should close its relay. The repeat parameter may be used to close the relay for a longer length of time (5 minutes is the suggested repeat value).

Error Log Entries and Test to Clear Values

Table 10-172. Customer Provided Alarming Device Error Log Entries

Error Type	Aux Data	Associated Test	Alarm Level	On/Off Board	Test to Clear Value
none	none	none			

System Technician-Demanded Tests: Descriptions and Error Codes

There are no errors associated with the CPAD CUST-ALM MO. The **test customer-alarm PC** command is provided to allow a technician to check that the customer-provided alarming device is correctly installed and functional. It is recommended that this test be run at least once after both the switch and the customer alarm have been installed.

Always investigate tests in the order presented in the table below when inspecting errors in the system. By clearing error codes associated with the *Customer-Provided Alarming Device Test*, for example, you may also clear errors generated from other tests in the testing sequence.

Order of Investigation	Short Test Sequence	Long Test Sequence	D/ND[1]
Customer-Provided Alarming Device Test (#115)	X	X	ND

1 D = Destructive; ND = Nondestructive

Customer-Provided Alarming Device Test (#115)

This test closes the relay that activates the CPAD for 1 minute only within the port network specified. If it takes longer than 1 minute to check that the CPAD has been activated, the Repeat field on the **test customer-alarm PC** command can be used to close the relay for up to 99 minutes. Note that when the repeat option is used, the results for Test #115 come back immediately and, for each test that passed, the CPAD is kept on for that many minutes. The CPAD does not go off after 1 minute and then come back on. Instead, the CPAD is kept on continuously for the entire time. If the CPAD is being activated and deactivated in a flickering fashion, there is a problem with either the CPAD, or the Maintenance/Tape Processor, or the EPN Maintenance circuit pack.

Table 10-173. TEST #115 Customer-Provided Alarming Device Test

Error Code	Test Result	Description/Recommendation
(blank) 1000 2029	ABORT	Internal system error 1. Try the command at 1-minute intervals a maximum of 5 times.
	PASS	The switch software successfully sent the request to the Maintenance/Tape Processor or EPN Maintenance circuit pack to turn on the CPAD. The CPAD must be physically inspected to verify that it is working. If the CPAD is working and the customer has complained that the CPAD did not indicate a system alarm when it occurred, then check the administered levels for turning on the CPAD via the Display System-Parameter Maintenance screen form. Compare these levels with the customer's specifications. If Test #115 passes, and the CPAD is not being activated, check the connection of the CPAD to the Maintenance/Tape Processor or EPN Maintenance circuit pack. If the CPAD can be activated but cannot be deactivated, first check to make sure Emergency Transfer is not activated in the affected port network via the **status system** command. Emergency Transfer can be forced to manual OFF by the Emergency Transfer switch on the Maintenance/Tape Processor or EPN Maintenance circuit pack. If Emergency Transfer is OFF and the CPAD still cannot be deactivated, check the administered levels for the CPAD via the Display System-Parameter Maintenance screen form and compare against the alarm levels currently present in the system (**display alarms** command).

DATA-BD (Data Channel NetPkt Circuit Pack)

MO Name (in Alarm Log)	Alarm Level	Initial Command to Run	Full Name of MO
DATA-BD	WARNING	test network-control	Network Control Circuit Pack
DATA-BD	MINOR	test network-control	Network Control Circuit Pack
DATA-BD	WARNING	test network-control	Network Control Circuit Pack

The DATA-BD is a generic hardware that supports the Data Channels on the TN2401/TN794 NetPkt or TN777B Netcon circuit pack. All circuit packs that have an interface with the TDM Bus have a common set of generic hardware that provides the TDM Bus interface. Consequently, these circuit packs share a common set of tests that verify generic hardware integrity.

XXX-BD (Common Port Circuit Pack) Maintenance documentation describes the circuit packs (including the TN2401/TN794 NetPkt circuit pack) and common set of tests.

The DATA-BD MO is different from other XXX-BD MOs because the DATA-BD MO is part of the TN2401/TN794 NetPkt or TN777B Netcon circuit pack, therefore, some board commands do not apply to this MO.

To access the DATA-BD MO, use **test network-control [short | long]**.

Error Log Entries and Test to Clear Values

Table 10-174. Data Channel Processor Circuit Pack Error Log entries

Error Type	Aux Data	Associated Test	Alarm Level	On/Off Board	Test to Clear Value
0[1]	0	Any	Any	Any	test data-module *ext* sh r 1
1 (a)	0	Data Channel Reset Test (#107)	MINOR	ON	test data-module *ext* l
23 (b)	0	None	WNG	OFF	
257	Any	Control Channel Test (#52)	MINOR	ON	test network-control [a | b] sh r 20
257 (c)	0	None			
513 (d)	Any	None			
769 (e)	4358	None			
1025 (f)	4363	NPE Audit Test (#50)			test network-control [a | b] sh
1538 (g)		Data Channel Reset Test (#107)	MINOR	ON	test data-module *ext* l
3840 (h)	Any	None			
3999(i)	Any	None			

1 Run the Short Test Sequence first. If all tests pass, run the Long Test Sequence. Refer to the appropriate test description and follow the recommended procedures.

Notes:

a. **Error Type 1**: DATA-BD portion of the TN2401/TN794 NetPkt or TN777B Netcon circuit pack not functioning.

Cannot reset TN2401/TN794 NetPkt or TN777B Netcon circuit pack with usual command (**reset board PCSS**). Use Data Channel Reset Test (#107) in the Long Test Sequence for the DATA-CHLs to reset.

1. Determine how many Data Channels (DATA-CHLs) are administered (**list data**).

NOTE:
A Data Channel (DATA-CHL) is identified by a “type” value of “netcon.”

2. Administer a DATA-CHL as necessary (**add data-module [*ext* | next]**).
3. Select a Data Channel (DATA-CHL) from the list (**list data**).

4. Reset the selected DATA-CHL (**test data-module *ext* long**), using DATA-CHL using its extension.

WARNING:
This command drops all data channel extensions. See DATA-CHL (Data Channel) Maintenance documentation first.

5. If the problem persists, replace the TN2401/TN794 NetPkt or TN777B Netcon circuit pack.

b. **Error Type 23**: Circuit pack is logically administered but not physically installed.

1. Install the circuit pack.
2. Verify that alarm clears.

c. **Error Type 257**: Transient communications problems with circuit pack. This error is not service-affecting and requires no action.

d. **Error Type 513**: Circuit pack reported hardware failure

1. Install the circuit pack.
2. Verify that alarm clears.

e. **Error Type 769**: While not important an important error, it can signal other errors.

1. Look for other errors on this circuit pack.

f. **Error Type 1025**: This error is not service-affecting and requires no action.

g. **Error Type 1**: DATA-BD portion of the TN2401/TN794 NetPkt or TN777B Netcon circuit pack not functioning.

Cannot reset TN2401/TN794 NetPkt or TN777B Netcon circuit pack with usual command (**reset board PCSS**). Use Data Channel Reset Test (#107) in the Long Test Sequence for the data channels to reset.

1. Determine how many data channels are administered (**list data**).

NOTE:
A data channel is identified by a “type” value of “netcon.”

2. Administer a data channel as necessary (**add data-module [*ext* | next]**).
3. Select a data channel from the list (**list data**).

4. Reset the selected data channel (**test data-module** ***ext*** **long**), using its administered extension.

WARNING:
This command drops all data channel extensions. See DATA-CHL (Data Channel) Maintenance documentation first.

If the problem persists, replace the TN2401/TN794 NetPkt or TN777B Netcon circuit pack.

h. **Error Type 3840**: This error does not affect service and requires no action.

i. **Error Type 3999**: Circuit pack is hyperactive.

If Error Type 3999:	And traffic volume is:	Then:
Does not accompany Error Type 1538	Heavy	Circuit pack is in service, but sent at least half hyperactive threshold. With heavy traffic, this is normal.
Does not accompany Error Type 1538,	Light	Circuit pack is in service, but sent at least half hyperactive threshold. With light traffic, this error indicates problem with circuit pack or its links.
Accompanies Error Type 3586,	Either	Switch removed hyperactive circuit pack.

System Technician-Demanded Tests: Descriptions and Error Codes

Investigate errors in the order they appear in the table below.

Order of Investigation	Short Test Sequence	Long Test Sequence	D/ND[1]
NPE Audit Test (#50)[2]		X	ND
Control Channel Loop Around Test (#52)	X	X	ND

1 D = Destructive; ND = Nondestructive

2 Refer to “DATA-CHL” and “SW-CTL” for other tests associated with DATA-BD maintenance.

NPE Audit Test (#50)

The system updates the network connectivity information for all the NPEs on the circuit pack through message to the on-board microprocessor. This test is non-destructive.

Table 10-175. TEST #50 NPE Audit Test

Error Code	Test Result	Description/Recommendation
	ABORT	Could not allocate the necessary system resources to run this test.
2100	ABORT	Could not allocate the necessary system resources to run this test.
1019	ABORT	Test already in progress.
	FAIL	Internal system error 1. Retry the command at 1-minute intervals a maximum of 5 times.
	PASS	Circuit pack NPEs and translation updated.

Control Channel Loop Around Test (#52)

This non-destructive test queries the circuit pack for its code and vintage. This test also verifies the circuit pack records.

Table 10-176. TEST #52 Control Channel Loop Around Test

Error Code	Test Result	Description/Recommendation
	ABORT	Could not allocate the necessary system resources to run this test.
	FAIL	Internal system error 1. Retry the command at 1-minute intervals, up to 5 times.
	PASS	Successful communication with circuit pack.

DATA-CHL (Data Channel)

MO Name (in Alarm Log)	Alarm Level	Initial Command to Run	Full Name of MO
DATA-CHL[1]	MINOR	test data-module *ext* l	Data Channel
DATA-CHL[2]	WARNING	test data-module *ext* sh[3]	Data Channel

1 The **test data-module *ext* long** command drops all sessions on all of the Data Channels. Refer to Data Channel Reset Test (#107).

2 *ext* is the extension of the Data Channel to be tested. The extension can be determined by issuing the **list data-module** command from the administration terminal. The resulting form provides a mapping from the 1CXXpp designation of the Data Channel to its corresponding extension, where pp indicates which one of the four (TN777B Netcon) or eight (TN2401/TN794 NetPkt) Data Channels is alarmed (01, 02, etc.) and C indicates the carrier on which the alarmed Data Channel resides.

3 The **test data-module *ext* long** command drops all sessions on all of the Data Channels. Refer to Data Channel Reset Test (#107).

The Data Channels (DATA-CHLs) provide a data communications interface that allows data terminal equipment connected to port circuit packs to communicate with software applications running on the system.

The TN777B Netcon circuit pack contains four (4) Data Channels and the TN2401/TN794 NetPkt circuit pack contains eight (8) Data Channels.

Each DATA-CHL represents a dial-up/dial-out asynchronous communications port that interfaces to the TDM Bus. Data is transported between the terminal equipment and the software application over the DATA-CHL.

Error Log Entries and Test to Clear Values

Table 10-177. Data Channel Error Log Entries

Error Type	Aux Data	Associated Test	Alarm Level	On/Off Board	Test to Clear Value
0[1](a)	0	Any	Any	Any	test data-module *ext* sh r 1
1	Any	Local Loop Back Test (#111)	MINOR	ON	test data-module *ext* sh r 3
18	0	busyout data-module *ext*	WARNING	OFF	release data-module *ext*
130		None	WARNING	ON	test data-module *ext* sh
257	Any	Remote Maintenance Looparound Test (#109)	MINOR	ON	test data-module *ext* sh r 5
513	Any	Crosstalk Test (#110)	MINOR	ON	test data-module *ext* sh r 3
769	Any	Dual Port RAM Test (#108)	MINOR	ON	test data-module *ext* l r 3

1 Run the Short Test Sequence first. If all tests pass, run the Long Test Sequence. Refer to the appropriate test description and follow the recommended procedures.

a. **Error Type 0**: Switch has removed circuit pack has been removed or circuit pack has been insane for more than 11 minutes.

   1. Reinsert the circuit pack.
   2. Verify that the alarm clears.
   3. If problem persists, replace the circuit pack.

System Technician-Demanded Tests: Descriptions and Error Codes

Two system technician test commands include the Data Channels (DATA-CHLs).

- The **test data-module *ext* [short | long]** command tests the single DATA-CHL, specified by *ext*.
- The **test network-control [short | long]** command tests each administered DATA-CHL that resides on the TN777B Netcon or TN2401/TN794 NetPkt circuit pack in the specified carrier.

Investigate errors in the order they appear in the table below.

Order of Investigation	Short Test Sequence	Long Test Sequence	D/ND[1]
Data Channel Reset Test (#107) (a)		X	D
Data Channel Dual Port Ram Test (#108) (a)		X	D
Data Channel Remote Maintenance Loop Around Test (#109)	X	X	ND
Data Channel Local Loop Back Test (#111)	X	X	ND
Data Channel Crosstalk Test (#110)	X	X	ND

1 D = Destructive; ND = Nondestructive

a. These tests are destructive.

1. Determine if there are any active links:
   - CDR (**status smdr-link**)
   - System printer (**status sp-link**)
   - Journal printer (**status journal-link wakeup-log** and **status journal-link pms-log**)
   - PMS links (**status pms-link**).
2. Busyout links if necessary:
   - CDR (**busyout smdr-link**)
   - System printer (**busyout sp-link**)
   - Journal printer (**busyout journal-link wakeup-log** and **busyout journal-link pms-log**)
   - PMS links (**busyout pms-link**)

Table 10-178. System Technician-Demanded Tests: DATA-CHL

Order of Investigation	Short Test Sequence	Long Test Sequence	D/ND[1]
Control Channel Test (Common Port Circuit Pack) (#52) (a)		X	ND
NPE Audit Test (Common Port Circuit Pack) (#50) (a)	X	X	ND
Data Channel Reset Test (#107)		X	D
Data Channel DPR Test (#108)		X	D
Data Channel Maintenance Loop Around Test (#109)	X	X	ND
Data Channel Crosstalk Test (#110)	X	X	ND
Data Channel Local Loop Back Test (#111)	X	X	ND

Continued on next page

Table 10-178. System Technician-Demanded Tests: DATA-CHL — *Continued*

Order of Investigation	Short Test Sequence	Long Test Sequence	D/ND[1]
Switch Control Reset Test (#93) (b) (d)			D
Time-of-Day Clock Test (#95) (b)	X	X	ND
Control Channel Interface Test (#92) (b)	X	X	ND
Control Channel Transmission Test (#94) (b)	X	X	ND
12-Volt Power Supply Test (#701) (c)	X	X	ND
Memory Card Insertion Test (#695) (c)	X	X	ND
Memory Card Format and Read Test (#696) (c)	X	X	ND
Memory Card Match Test (#697) (c)	X	X	ND
Memory Card Write-Protected Test (#698) (c)	X	X	ND
Memory Card Directory Recovery Test (#699) (c)	X	X	ND
Memory Card Translation Data Integrity Test (#694) (c)		X	ND
Memory Card Erase/Write/Read Test (#693) (c)	X		ND

1 D = Destructive, ND = Non-destructive

a. Refer to DATA-BD (Netcon or NetPkt Circuit Pack) Maintenance documentation for a description of these tests.

b. Refer to SW-CTL (Switch Control) Maintenance documentation for a description of these tests.

c. Refer to CARD-MEM for information on this test.

d. This test runs only as part of the **reset switch-control** command.

Data Channel Reset Test (#107)

This test is destructive.

This test resets the data communications interface that DATA-CHLs provides and drops all existing connections.

Table 10-179. TEST #107 Data Channel Reset Test

Error Code	Test Result	Description/Recommendation
1000	ABORT	Could not allocate the necessary system resources to run this test. 1. Try the command at 1-minute intervals, up to 5 times.
2100	ABORT	Could not allocate the necessary system resources to run this test.
10704	ABORT	Internal system error 1. Try the command at 1-minute intervals, up to 5 times.
Any	FAIL	The circuit pack failed to reset. 1. Execute the command again. 2. If the problem persists, replace the Processor circuit pack. 3. Reset Time-of-Day clock (**set time**).
	PASS	The circuit pack initializes correctly.

Data Channel Dual Port RAM Test (#108)

This test is destructive.

Hardware and software share the dual port RAM. This test requests each side to read and write the dual port RAM, first one at a time and then simultaneously in alternate locations.

This test prevents new connections from establishing over the DATA-CHLs, however, existing connections are not (and cannot) be dropped.

Table 10-180. TEST #108 Data Channel Dual Port RAM Test

Error Code	Test Result	Description/Recommendation
1000	ABORT	Could not allocate the necessary system resources to run this test. 1. Retry the command at 1-minute intervals, up to 5 times.
	FAIL	Dual port RAM not functioning correctly. 1. Execute the command again. 2. If the problem persists, replace the Netcon or NetPkt circuit pack. 3. If problem persists, reset Time-of-Day clock (**set time**).
	PASS	The dual port RAM is functioning.

Data Channel Remote Maintenance Loop Around Test (#109)

This non-destructive test verifies the integrity of the entire DATA-CHL (that is, the software, dual port RAM, and hardware that comprise it). The test places a call from arbitrary DATA-CHL and into target DATA-CHL to loop over the connection in each direction, and it checks that the data received by one data channel is the same as the data that was sent by the other.

By establishing a connection between two data channels across the TDM Bus, this test also verifies the integrity of the TDM Bus and Tone-Clock circuit.

Tests #107, #108, #110, and #111 on the DATA-CHL maintenance object can help to determine which data channel is defective.

NOTE:
If Error Code recommends busying out a CDR, System Printer, Journal Printer, or PMS Link, restore each busied-out link to service before concluding work on the problem.

Table 10-181. TEST #109 Data Channel Remote Maintenance Loop Around Test

Error Code	Test Result	Description/Recommendation
4	ABORT	Error Code 4 can mean 1 of 2 problems: a. Target DATA-CHL is busy and, therefore, not available for use. b. Internal system error. If the results of Tests #110 and #111 are both PASS, then there is a high probability that the target DATA-CHL is not defective. Proceed with the remaining steps **only if it is necessary to completely test the target DATA-CHL:** 1. Determine if errors exist on links using target DATA-CHL (**status link**). 2. If there are no errors, busyout the links (**busyout link**). 3. Retry the command at 1-minute intervals, up to 5 times. 4. Restore any busied out links.
30 31 32 33 40 41 70 75	ABORT	Internal system error 1. Retry the command at 1-minute intervals, up to 5 times.

Continued on next page

Table 10-181. TEST #109 Data Channel Remote Maintenance Loop Around Test — *Continued*

Error Code	Test Result	Description/Recommendation
1000	ABORT	Error Code of 1000 can mean one of several things: a. Target DATA-CHL is busy and, therefore, not available for use. b. No other DATA-CHLs are administered and, therefore, not available to place the call to the target DATA-CHL. c. All other DATA-CHLs are busy and, therefore, not available to place the call to the target DATA-CHL. d. Could not allocate the necessary system resources to run this test. e. Internal system error. If the results of Tests #110 and #111 are both PASS, then there is a high probability that the target DATA-CHL is not defective. Proceed with the remaining steps **only if it is necessary to completely test the target DATA-CHL:** 1. Determine if errors exist on links using target DATA-CHL (**status link**). 2. If there are no errors, busyout the links (**busyout link**). 3. Determine if no other DATA-CHLs are administered (**list data-module**). 4. If no other DATA-CHLs are administered, administer at least one. 5. Determine if links exist on all non-target DATA-CHLs (**status link**). 6. If links exist on all DATA-CHLs, busyout the links (**busyout link**). 7. Retry the command at 1-minute intervals, up to 5 times. 8. Restore any busied out links.

Continued on next page

Table 10-181. TEST #109 Data Channel Remote Maintenance Loop Around Test — *Continued*

Error Code	Test Result	Description/Recommendation
1006	ABORT	For this test, an Error Code of 1006 can have one of several different meanings: a. No other DATA-CHLs are administered and, therefore, not available to place the call to the target DATA-CHL. b. All other DATA-CHLs are busy and, therefore, not available to place the call to the target DATA-CHL. c. Could not allocate the necessary system resources to run this test. d. Internal system error. If the results of Tests #110 and #111 are both PASS, then there is a high probability that the target DATA-CHL is not defective. Proceed with the remaining steps **only if it is necessary to completely test the target DATA-CHL:** 1. Determine if no other DATA-CHLs are administered (**list data-module**). 2. If no other DATA-CHLs are administered, administer at least one. 3. Determine if errors exist on links using target DATA-CHL (**status link**). 4. If there are no errors, busyout the links (**busyout link**). 5. Retry the command at 1-minute intervals, up to 5 times. 6. Restore any busied out links.
1016	ABORT	Could not allocate the necessary system resources to run this test. 1. Retry the command at 1-minute intervals, up to 5 times.
1018	ABORT	Test disabled through software patch.
2003	ABORT	Internal system error
2004	ABORT	Internal system error 1. Check dial plan to ensure data channel extensions are set up as local extensions rather than remote or UDP extensions. 2. Retry the command at 1-minute intervals, up to 5 times.

Continued on next page

Table 10-181. TEST #109 Data Channel Remote Maintenance Loop Around Test — *Continued*

Error Code	Test Result	Description/Recommendation
40 41	FAIL	Error Codes 40 and 41: Remote Maintenance Looparound Test failed because data was corrupted.
2000 2003 2004		Error Codes 2000-2004: Remote Maintenance Looparound Test failed because data was lost. Test cannot indicate which DATA-CHL is defective. 1. Check dial plan to ensure data channel extensions are set up as local extensions rather than remote or UDP extensions. 2. Determine if links exist on DATA-CHLs (**status link**). 3. Execute tests #110 and #111 in the Short Test Sequence for the *target* DATA-CHL to determine which actions to take, based on the results below. a. Both Test results are PASS: Arbitrarily chosen DATA-CHL is probably defective. 1. Run Short Test Sequence for *each* DATA-CHL not in use. 2. Note the test results for Tests #110 and #111 for each DATA-CHL. 3. Remove DATA-CHLs (**remove data-module *ext***) for which the results of Tests #110 and #111 were both FAIL. 4. Replace the Netcon or NetPkt circuit pack at earliest convenience. b. Only one test result is FAIL for any other DATA-CHLs not in use: TDM Bus is probably defective. c. Test #110 result is FAIL and Test #111 result is PASS (for target DATA-CHL): Either the RDM Bus or Tone-Clock circuit pack is defective. 1. Check for TDM bus alarms or errors (TDM-BUS) and/or Tone-Clock circuit pack alarms or errors (TONE-BD, TONE-PT, and TDM-CLK). 2. If there are no errors or alarms, the target DATA-CHL, or Netcon or NetPkt circuit pack are probably defective: refer to steps in 3a above. 3. If there are errors or alarms, refer to Maintenance documentation to clear the alarms and errors. 4. Repeat the test.

Continued on next page

Table 10-181. TEST #109 Data Channel Remote Maintenance Loop Around Test — *Continued*

Error Code	Test Result	Description/Recommendation
40 41 2000 2003 2004	FAIL *(cont'd.)*	Test #110 result is either PASS or FAIL and Test #111 result is FAIL (for target DATA-CHL): the target DATA-CHL, or Netcon or NetPkt circuit pack are probably defective. Busyout the links to all DATA-CHLs (**busyout link**). Test the target DATA-CHL (**test data-module *ext* long)**. If Test #107 result or Test #108 is FAIL, replace the Netcon or NetPkt circuit pack when convenient. Reset Time-of-Day clock on new circuit pack (**set time**). Repeat the test. If Test #107 result is PASS, and Test #108 result is FAIL, Replace the Netcon or NetPkt circuit pack when convenient. Repeat the test. If both Test #107 result and Test #108 results ARE PASS, the target DATA-CHL is defective. Remove target DATA-CHL from operation (**remove data-module *ext***). Replace the Netcon or NetPkt circuit pack when convenient. Reset Time-of-Day clock on new circuit pack (**set time**) Restore any busied out links.
	PASS	Connections can be established over the DATA-CHLs.

.Data Channel Crosstalk Test (#110)

This non-destructive test verifies the integrity of the entire DATA-CHL. Unlike the Remote Maintenance Looparound Test (#109), this test only involves the target DATA-CHL.

The test establishes a looparound connection over the DATA-CHL, to test the DATA-CHL as a sender receiver of data. The test checks that the data received by the DATA-CHL is the same as the data that was sent by the DATA-CHL. Because the looparound connection is across the TDM Bus, this test also verifies the integrity of the TDM Bus and Tone-Clock circuit pack.

Tests #107, #108, and #111 on the DATA-CHL can be helpful to determine which DATA-CHL is defective.

NOTE:
If Error Code recommend busying out a CDR, System Printer, Journal Printer, or PMS Link, restore each busied out link to service before concluding work on the problem.

Table 10-182. TEST #110 Data Channel Crosstalk Test

Error Code	Test Result	Description/Recommendation
4	ABORT	Error Code 4 can mean 1 of 2 problems: d. Target DATA-CHL is busy and, therefore, not available for use. e. Internal system error. If the results of Tests #110 and #111 are both PASS, then there is a high probability that the target DATA-CHL is not defective. Proceed with the remaining steps **only if it is necessary to completely test the target DATA-CHL:** 1. Determine if errors exist on links using target DATA-CHL (**status link**). 2. If there are no errors, busyout the links (**busyout link**). 3. Retry the command at 1-minute intervals, up to 5 times. 4. Restore any busied out links.
40 70 75	ABORT	Internal system error 1. Retry the command at 1-minute intervals, up to 5 times.

Continued on next page

Table 10-182. TEST #110 Data Channel Crosstalk Test — *Continued*

Error Code	Test Result	Description/Recommendation
1000	ABORT	Error Code of 1000 can mean one of several things: a. The target DATA-CHL is busy and, therefore, not available for use. b. Could not allocate the necessary system resources to run this test. c. Internal system error If the results of Tests #110 and #111 are both PASS, then there is a high probability that the target DATA-CHL is not defective. Proceed with the remaining steps **only if it is necessary to completely test the target DATA-CHL:** 1. Determine if errors exist on links using target DATA-CHL (**status link**). 2. If there are no errors, busyout the links (**busyout link**). 3. Determine if no other DATA-CHLs are administered (**list data-module**). 4. If no other DATA-CHLs are administered, administer at least one. 5. Determine if links exist on all non-target DATA-CHLs (**status link**). 6. If links exist on all DATA-CHLs, busyout the links (**busyout link**). 7. Retry the command at 1-minute intervals, up to 5 times. 8. Restore any busied out links.
1002	ABORT	Error Code 1002 can mean 1 of 2 problems: a. Could not allocate the necessary system resources to run this test. b. Internal system error.
1006	ABORT	Could not allocate the necessary system resources to run this test.
1016	ABORT	Resources for the test are not available. 1. Retry the command at 1-minute intervals, up to 5 times.
1018	ABORT	Test disabled through software patch.
2000	ABORT	Could not allocate the necessary system resources to run this test.
2003	ABORT	Internal system error 1. Retry the command at 1-minute intervals, up to 5 times.

Continued on next page

Table 10-182. TEST #110 Data Channel Crosstalk Test — *Continued*

Error Code	Test Result	Description/Recommendation
14 16 40 2000 2003 2004	FAIL	Codes 40, 41: Remote Maintenance Looparound Test failed because data was corrupted. Codes 2000, 2003, and 2004: Remote Maintenance Looparound Test failed because data was lost. Test cannot indicate which DATA-CHL is defective. 1. Check dial plan to ensure data channel extensions are set up as local extensions, not as remote or UDP extensions. 2. Determine if links exist on DATA-CHLs (**status link**). 3. Execute tests #110 and #111 in the Short Test Sequence for the *target* DATA-CHL to determine which actions to take, based on the results below. ■ Both Test results are PASS: Arbitrarily chosen DATA-CHL is probably defective. 1. Run Short Test Sequence for *each* DATA-CHL not in use. 2. Note the test results for Tests #110 and #111 for each DATA-CHL. 3. Remove DATA-CHLs (**remove data-module *ext***) where Test results #110 and #111 were both FAIL. 4. Replace the Netcon or NetPkt circuit pack at earliest convenience. ■ Only one test result is FAIL for any other DATA-CHLs not in use: TDM Bus is probably defective. ■ Test #110 result is FAIL and Test #111 result is PASS (for DATA-CHL): Defective RDM Bus or Tone-Clock board. 1. Check for TDM bus alarms or errors (TDM-BUS) and/or Tone-Clock circuit pack alarms or errors (TONE-BD, TONE-PT, and TDM-CLK). 2. If there are no errors or alarms, the target DATA-CHL, or Netcon or NetPkt circuit pack are probably defective: refer to steps in 3.a above. 3. If there are errors or alarms, refer to Maintenance documentation to clear the alarms and errors. 4. Repeat the test.

Continued on next page

Table 10-182. TEST #110 Data Channel Crosstalk Test — *Continued*

Error Code	Test Result	Description/Recommendation
14 16 40 2000 2003 2004	FAIL *(cont'd.)*	a. Test #110 result is either PASS or FAIL and Test #111 result is FAIL (for target DATA-CHL): the target DATA-CHL, or Netcon or NetPkt circuit pack are probably defective. 1. Busyout the links to all DATA-CHLs (**busyout link**). 2. Test the target DATA-CHL (**test data-module *ext* long)**. 3. If Test #107 result or Test #108 is FAIL, replace the Netcon or NetPkt circuit pack when convenient. 4. Reset Time-of-Day clock on new circuit pack (**set time**). 5. Repeat the test. 6. If Test #107 result is PASS, and Test #108 result is FAIL, 7. Replace the Netcon or NetPkt circuit pack when convenient. 8. Repeat the test. b. If both Test #107 result and Test #108 results ARE PASS, the target DATA-CHL is defective. 1. Remove target DATA-CHL from operation (**remove data-module *ext***). 2. Replace the Netcon or NetPkt circuit pack when convenient. 3. Reset Time-of-Day clock on new circuit pack (**set time**) 4. Restore any busied-out links.
	PASS	DATA-CHLs establish connections.

Data Channel Local Loop Back Test (#111)

Hardware and software share the dual port RAM. This non-destructive test verifies the dual port RAM integrity. The test loops back data from the DATA-CHL to the DATA-CHL, within the dual port RAM, and checks that the DATA-CHL receives the data it sent.

NOTE:
If Error Code recommend busying out a CDR, System Printer, Journal Printer, and/or PMS Link, restore each busied out link to service according to Maintenance documentation, before concluding work on the problem.

Table 10-183. TEST #111 Data Channel Local Loop Back Test

Error Code	Test Result	Description/Recommendation
4	ABORT	Error Code 4 can mean 1 of 2 problems: 1. Target DATA-CHL is busy and, therefore, not available for use. 2. Internal system error. If the results of Tests #110 and #111 are both PASS, then there is a high probability that the target DATA-CHL is not defective. Proceed with the remaining steps **only if it is necessary to completely test the target DATA-CHL:** 1. Determine if errors exist on links using target DATA-CHL (**status link**). 2. If there are no errors, busyout the links (**busyout link**). 3. Retry the command at 1-minute intervals, up to 5 times. 4. Restore any busied out links.
40 70 75	ABORT	Internal system error 1. Retry the command at 1-minute intervals, up to 5 times.

Continued on next page

Table 10-183. TEST #111 Data Channel Local Loop Back Test — *Continued*

Error Code	Test Result	Description/Recommendation
1000	ABORT	Error Code of 1000 can mean one of several things: a. The target DATA-CHL is busy and, therefore, not available for use. b. Could not allocate the necessary system resources to run this test. c. Internal system error If the results of Tests #110 and #111 are both PASS, then there is a high probability that the target DATA-CHL is not defective. Proceed with the remaining steps **only if it is necessary to completely test the target DATA-CHL:** 1. Determine if errors exist on links using target DATA-CHL (**status link**). 2. If there are no errors, busyout the links (**busyout link**). 3. Determine if no other DATA-CHLs are administered (**list data-module**). 4. If no other DATA-CHLs are administered, administer at least one. 5. Determine if links exist on all non-target DATA-CHLs (**status link**). 6. If links exist on all DATA-CHLs, busyout the links (**busyout link**). 7. Retry the command at 1-minute intervals, up to 5 times. 8. Restore any busied out links.
1006	ABORT	Error Code 1006 can mean 1 of 2 problems: a. Could not allocate the necessary system resources to run this test. b. Internal system error. 1. Retry the command at 1-minute intervals, up to 5 times.
1016	ABORT	a. Could not allocate the necessary system resources to run this test. 1. Retry the command at 1-minute intervals, up to 5 times.
1018	ABORT	Test disabled through software patch.
2000	ABORT	Internal system error

Continued on next page

Table 10-183. TEST #111 Data Channel Local Loop Back Test — *Continued*

Error Code	Test Result	Description/Recommendation
2003	ABORT	Internal system error 1. Retry the command at 1-minute intervals, up to 5 times.
40 2000 2003 2004	FAIL	Error Code 40: Local Loop Back Test failed—data corrupt. Error Code 2000-2004: Local Loop Back Test—data lost. 1. Determine if links exist on DATA-CHLs (**status link**). 2. Busyout the links to all DATA-CHLs (**busyout link**). 3. Test the target DATA-CHL (**test data-module *ext* long)**. 4. If Test #107 result is FAIL, replace the Netcon or NetPkt circuit pack when convenient. 5. Reset Time-of-Day clock on new circuit pack (**set time**). 6. Repeat the test. 7. If Test #107 result is PASS, and Test #108 result is FAIL, replace the Netcon or NetPkt circuit pack when convenient. 8. Repeat the test. 9. If both Test #107 result and Test #108 results ARE PASS, the target DATA-CHL is defective. 10. Remove target DATA-CHL from operation (**remove data-module *ext***). 11. Replace the Netcon or NetPkt circuit pack when convenient. 12. Reset Time-of-Day clock on new circuit pack (**set time**). 13. Restore any busied out links.
	PASS	DATA-CHLs establish connections.

DATA-CON (Network Control Driver)

MO Name (in Alarm Log)	Alarm Level	Initial Command to Run	Full Name of MO
DATA-CON	MINOR	none	Network Control Driver

The TN2401/TN794 NetPkt or TN777B Network Control circuit pack contains the following objects: the SW-CTL (Switch Control), four DATA-CHLs (Data Channels), the DATA-CON (Network Control Driver), and the generic hardware that interfaces with the TDM Bus (DATA-BD). The DATA-CON (Network Control Driver) is the subject of this section. The DATA-CHLs (Network Control Channels) are also described.

Together the four DATA-CHLs and the DATA-CON provide a data communications interface that allows DTE equipment connected to port circuit packs to communicate with software applications running on the system. The DATA-CON represents the interface to the control channel of the TDM Bus. Each DATA-CHL represents a dial-up/dial-out asynchronous communication port that interfaces to the TDM Bus. The DATA-CON supports the signaling required to establish and tear down a connection between the terminal equipment and a software application. Data is transported between the terminal equipment and the software over the connection established over the DATA-CHL.

A system with a single SPE has a single Network Control circuit pack. Thus, there is a single DATA-CON. A High or Critical Reliability system has two Network Control circuit packs, one in each of the two SPEs. Thus, there is a DATA-CON on the Network Control circuit pack that resides in the Active SPE control carrier and a DATA-CON on the Network Control circuit pack that resides in the Standby SPE control carrier. Refer to Chapter 6, “Reliability Systems: A Maintenance Aid”, and the STBY-SPE (Standby SPE) Maintenance documentation for discussions of High and Critical Reliability systems.

From an external (user) point of view, the DATA-CON is not directly accessible via a system technician command; that is, there is no object command word that represents it. Instead, the DATA-CON is tested under the guise of the DATA-CHLs that it controls. The **test data-module <ext> [short | long]** command tests the DATA-CON along with the DATA-CHL designated by <ext> but all Test Results are associated with the DATA-CHL Maintenance Name.

From an internal (system software) point of view, the DATA-CON uses the same set of tests as the DATA-CHLs. Therefore, the DATA-CON assumes the same Error Type and Aux Data values as the DATA-CHLs in the Hardware Error Log. It is also alarmed at the same Alarm Level (that is, MINOR, ON BOARD) in the Alarm Log. In both logs, the Maintenance Name is DATA-CON.

Error Log Entries and Test to Clear Values

Table 10-184. Network Control Driver Error Log Entries

Error Type	Aux Data	Associated Test	Alarm Level	On/Off Board	Test to Clear Value (a)
0[1]	0	Any	Any	Any	none
1		Local Loop Back Test (#111)	MINOR	ON	none
257	Any	Remote Maintenance Loop Around Test (#109)	MINOR	ON	none
513		Crosstalk Test (#110)	MINOR	ON	none
769	Any	Dual Port RAM Test (#108)	MINOR	ON	none

1 Run the Short Test Sequence first. If all tests pass, run the Long Test Sequence. Refer to the appropriate test description and follow the recommended procedures.

Note:

a. As previously described, the DATA-CON is not directly accessible via a system technician command so there is no Test to Clear value that can be used to directly clear errors and alarms raised against the DATA-CON. However, since the DATA-CON and the DATA-CHLs share the same set of tests (that is, test the same set of hardware, firmware, and software), DATA-CON errors and alarms are accompanied by DATA-CHL errors and alarms.

Therefore, the strategy to clear DATA-CON errors and alarms is to first clear all DATA-CHL errors and alarms. After DATA-CHL errors and alarms have been cleared, allow about 60 minutes for maintenance software to run internally and to automatically clear the DATA-CON errors and alarms.

System Technician-Demanded Tests: Descriptions and Error Codes

Because the DATA-CON uses the same set of tests as the DATA-CHLs, refer to the “System Technician-Demanded Tests: Descriptions and Error Codes” in the DATA-CHL (Network Control Data Channel) Maintenance documentation for a description of the tests and their associated error codes.

DAT-LINE (Data Line)

MO Name (in Alarm Log)	Alarm Level	Initial Command to Run[1]	Full Name of MO
DAT-LINE	MINOR	test port PCSSpp l	Data Line
DAT-LINE	WARNING	test port PCSSpp sh	Data Line

1 Where P is the port network number (1 for PPN and 2 or 3 for EPN); C is the carrier designation (for example, A, B, C, D, or E); and SS is the address of the slot in the carrier where the circuit pack is located (for example, 01, 02, etc.).

The TN726 Data Line circuit pack is a port circuit that provides connectivity from the system to asynchronous CPE having RS232-compatible serial interfaces. There are eight data lines (DAT-LINEs) on the Data Line circuit pack. If there are errors associated with the DT-LN-BD (Data Line Circuit Pack), refer to the XXX-BD (Common Port Circuit Pack) Maintenance documentation.

Data Lines are administered via the administration terminal **add data-module** command. The data module type is *data-line*. The **list data-module** command lists all administered data modules in the system.

The TN750 Announcement circuit pack has one Data Line on it. The Data Line is used for saving and restoring announcements. For a description of this feature, refer to ANN-BD (Announcement Circuit Pack) Maintenance documentation. Also, if there are errors associated with the Announcement circuit pack, refer to the ANN-BD Maintenance documentation.

NOTE:
If the tests for the Data Line in question pass and there are still user-reported problems, there is probably an external problem. Test the ADU, following the procedures outlined in *User Manual Z3A Asynchronous Data Unit*, 555-401-701. If the ADU appears to be working properly, check the external wiring and, finally, check the customer equipment.

Error Log Entries and Test to Clear Value

Table 10-185. Data Line Error Log Entries

Error Type	Aux Data	Associated Test	Alarm Level	On/Off Board	Test to Clear Value
0[1]	0	Any	Any	Any	test port PCSSpp sh r 1
1		Digital Loop Around Test (#171)	MINOR	ON	test port PCSSpp sh r 2
15(a)	Any	Audit Update Test (#36)			
18	0	busyout port PCSSpp	WARNING	OFF	release port PCSSpp
130 (b)		None	WARNING	ON	test port PCSSpp sh
257		Conference Circuit Test (#7)	MINOR	ON	test port PCSSpp l r 2
513		NPE Crosstalk Test (#6)	MINOR	ON	test port PCSSpp l r 2
769(a)	Any (c)	None			

1 Run the Short Test Sequence first. If all tests pass, run the Long Test Sequence. Refer to the appropriate test description and follow the recommended procedures.

Notes:

a. This is a software audit error that does not indicate any hardware malfunction. Run the Short Test Sequence and investigate errors (if any).

b. This error type indicates that the circuit pack has been removed or has been insane for more than 11 minutes. To clear the error, reinsert or replace the circuit pack.

c. This error is logged when the Data Line circuit pack finds an error with the transmit/receive circuitry of an administered Data Line on circuit pack insertion. Perform the following procedure:

1. Issue the **busyout board PCSS** command to busyout the Data Line circuit pack on which this port resides.
2. Issue the **reset board PCSS** command. Check the Hardware Error Log to determine if Error Type 769 is logged again for the DAT-LINE MO.

   NOTE:
   When displaying errors, set the Active Alarms Only field to “n.”

   If Error Type 769 reappears, replace the DAT-LINE circuit pack. If Error Type 769 does not reappear, proceed to Step 3.
3. Issue the **release board PCSS** command to release the Data Line circuit pack on which this port resides.

System Technician-Demanded Tests: Descriptions and Error Codes

Always investigate tests in the order presented in the table below when inspecting errors in the system. By clearing error codes associated with the *Digital Loop Around Test,* for example, you may also clear errors generated from other tests in the testing sequence.

Order of Investigation	Short Test Sequence	Long Test Sequence	D/ND[1]
Digital Loop Around Test (#171)	X	X	ND
NPE Crosstalk Test (#6)		X	ND
Conference Circuit Test (#7)		X	ND
Audit Update Test (#36)	X	X	ND

1 D = Destructive; ND = Nondestructive

NPE Crosstalk Test (#6)

The NPE Crosstalk Test verifies that this port's NPE channel talks on the selected time slot and never crosses over to time slots reserved for other connections. If the NPE is not working correctly, one-way and noisy connections may be observed. This test is usually part of a port's Long Test Sequence and takes about 20 to 30 seconds to complete.

Table 10-186. TEST #6 NPE Crosstalk Test

Error Code	Test Result	Description/Recommendation
	ABORT	Could not allocate the necessary system resources to run this test. 1. Retry the command at 1-minute intervals a maximum of 5 times.
1000	ABORT	System resources required to run this test are not available. The port may be in use on a valid call. Use **status data-module** to determine when the port is available for testing. 1. Retry the command at 1-minute intervals a maximum of 5 times.
1001	ABORT	Could not allocate the necessary system resources to run this test. 1. Retry the command at 1minute intervals a maximum of 5 times.
1002	ABORT	The system could not allocate time slots for the test. The system may be under heavy traffic conditions or it may have time slots out-of-service due to TDM-BUS errors. Refer to "TDM-BUS" to diagnose TDM-BUS errors. 1. If system has no TDM-BUS errors and is not handling heavy traffic, repeat test at 1-minute intervals a maximum of 5 times.
1003	ABORT	The system could not allocate a tone receiver for the test. The system may be oversized for the number of Tone Detectors present or some Tone Detectors may be out-of-service. 1. Resolve any "TTR-LEV" errors. 2. Resolve any "TONE-PT" errors. 3. If neither condition exists, retry the test at 1-minute intervals a maximum of 5 times.

Continued on next page

Table 10-186. TEST #6 NPE Crosstalk Test — *Continued*

Error Code	Test Result	Description/Recommendation
1004	ABORT	The port has been seized by a user for a valid call. Use **status data-module** to determine when the port is available for testing. 1. Retry the command at 1-minute intervals a maximum of 5 times.
1020	ABORT	The test did not run due to an already existing error on this port (Error Type 769). 1. Refer to the procedure for Error Type 769. If Error Type 769 still occurs on this port, replace the circuit pack.
2000	ABORT	Response to the test request was not received within the allowable time period.
2100	ABORT	Could not allocate the necessary system resources to run this test. 1. Retry the command at 1-minute intervals a maximum of 5 times.
Any	FAIL	The NPE of the tested port was found to be transmitting in error. This causes noisy and unreliable connections. 1. Replace the circuit pack.
	PASS	The port is correctly using its allocated time slots. User-reported troubles on this port should be investigated using other port tests, examining the ADU, external wiring, and customer equipment.

Conference Circuit Test (#7)

The Conference Circuit Test verifies that the NPE channel for the port being tested can correctly perform the conferencing function. The NPE is instructed to listen to several different tones and conference the tones together. The resulting signal is then measured by a Tone Detector port. If the level of the tone is within a certain range, the test passes.

Table 10-187. TEST #7 Conference Circuit Test

Error Code	Test Result	Description/Recommendation
	ABORT	Could not allocate the necessary system resources to run this test. 1. Retry the command at 1-minute intervals a maximum of 5 times.
1000	ABORT	System resources required to run this test are not available. The port may be in use on a valid call. Use **status data-module** to determine when the port is available for testing.
1004	ABORT	The port has been seized by a user for a valid call. Use **status data-module** to determine when the port is available for testing. 1. Retry the command at 1-minute intervals a maximum of 5 times.
1020	ABORT	The test did not run due to an already existing error on this port (Error Type 769). 1. Refer to the procedure for Error Type 769. If Error Type 769 still occurs on this port, replace the circuit pack.
2000	ABORT	Response to the test request was not received within the allowable time period.
2100	ABORT	Could not allocate the necessary system resources to run this test. 1. Retry the command at 1-minute intervals a maximum of 5 times.
Any	FAIL	The conference circuit test failed (possible off-board problem). 1. Busyout and release the port (data line), and then retest. 2. Replace the circuit pack if the test continues to fail.
	PASS	The port can correctly conference multiple connections. User-reported troubles on this port should be investigated using other port tests, examining the ADU, external wiring, and customer equipment.

Audit Update Test (#36)

This audit makes sure that the hardware state of the Data Line is consistent with the system translations. When this audit is run, the port is queried for the switchhook state, and the software state is updated according to the returned value. Also, the data line options are sent down to the port.

Table 10-188. TEST #36 Audit Update Test

Error Code	Test Result	Description/Recommendation
1000	ABORT	System resources required to run this test are not available. 1. Retry the command at 1-minute intervals for a maximum of 5 times. 2. Escalate the problem if the test continues to abort.
1006	ABORT	The test did not run due to an already existing error on this port (Error Type 769). 1. Refer to the procedure for Error Type 769. If Error Type 769 still occurs on this port, replace the circuit pack.
2000	ABORT	Response to the test request was not received within the allowable time period.
2100	ABORT	Could not allocate the necessary system resources to run this test. 1. Retry the command at 1-minute intervals a maximum of 5 times.
7	FAIL	Internal system error 1. Retry the command at 1-minute intervals a maximum of 5 times.
	PASS	The hardware port state is consistent with the software state. User-reported troubles on this port should be investigated using other port tests, examining the ADU, external wiring, and customer equipment.

Digital Loop Around Test (#171)

The Digital Loop Around Test checks the Data Line's ability to transmit and receive data on the TDM Bus. Data is sent through Network Control Data Channel 3 (data channel port 3) over the TDM Bus, internally looped through the Data Line back onto the TDM Bus, and received again by Network Control Data Channel 3.

If data channel 3 is in use or not administered, this test aborts. This test may fail if Network Control Data Channel 3 is not functioning properly. If there are any DATA-CHL errors in the Error Log, refer to the DATA-BD (Network Control Circuit Pack) Maintenance documentation to clear them up first. This test passes regardless of any customer equipment that may be connected to the port, as long as the port is not in use by the equipment.

Table 10-189. TEST #171 Digital Loop Around Test

Error Code	Test Result	Description/Recommendation
	ABORT	Internal system error 1. Retry the command at 1-minute intervals a maximum of 5 times.
1000	ABORT	System resources required to run this test are not available. The port may be in use on a valid call. Use **status data-module** to determine when the port is available for testing. 1. Retry the command at 1-minute intervals a maximum of 5 times.
1005 1007	ABORT	Network Control Data Channel 3 is not administered. This port is required to run this test. 1. Verify that data channel 3 is not administered with the **list data-module** command. Administer data channel 3 with the **add data-module** command, and run this test again.
1016	ABORT	Network Control Data Channel 3 is busy. The port may be in use on a valid call. Use **status data-module** to determine when the port is available for testing. 1. Retry the command at 1-minute intervals a maximum of 5 times.
1020	ABORT	The test did not run due to an already existing error on this port (Error Type 769). 1. Reseat the circuit pack and look in the Error Log. If Error Type 769 still occurs on this port, replace the circuit pack.

Continued on next page

Table 10-189. TEST #171 Digital Loop Around Test — *Continued*

Error Code	Test Result	Description/Recommendation
2000	ABORT	Response to the test request was not received within the allowable time period. 1. Retry the command at 1-minute intervals for a maximum of 5 times. 2. If the test continues to abort, escalate the problem.
2003	ABORT	Failed to receive an off-hook from the Data Line. 1. Retry the command at 1-minute intervals a maximum of 5 times.
2004	ABORT	Failed to receive an off-hook from the Network Control Data Channel.
2005	ABORT	The handshake between the data channel and the data line port failed. 1. Look for DATA-CHL errors in the Error Log. If present, refer to DATA-BD (Network Control Circuit Pack) Maintenance documentation. 2. Retry the command at 1-minute intervals a maximum of 5 times. 3. If the test still aborts, replace the circuit pack.
2100	ABORT	Could not allocate the necessary system resources to run this test. 1. Retry the command at 1-minute intervals a maximum of 5 times.

Continued on next page

Table 10-189. TEST #171 Digital Loop Around Test — *Continued*

Error Code	Test Result	Description/Recommendation
	FAIL	The test failed because the data received did not match the data sent. This would indicate that there is a fault somewhere in the transmit/receive path to the TDM Bus, which probably results in data corruption over this port. This test may fail if Network Control Data Channel 3 is not functioning properly. 1. Look for DATA-CHL errors in the Error Log. If present, refer to DATA-BD (Network Control Circuit Pack) Maintenance documentation. 2. Repeat this test. 3. If the test fails again, replace the Data Line circuit pack.
2000	FAIL	The test failed waiting for the transmitted data to be looped back. 1. Look for DATA-CHL errors in the Error Log. If present, refer to DATA-BD (Network Control Circuit Pack) Maintenance documentation. 2. Repeat this test. 3. If the test fails again, replace the Data Line circuit pack.
	PASS	The port can correctly transmit/receive data. User-reported troubles on this port should be investigated by examining the ADU, external wiring, and customer equipment.

DC-POWER

Single-Carrier Cabinet Power

MO Name (in Alarm Log)	Alarm Level	Initial Command to Run[1]	Full Name of MO
DC-POWER	MAJOR	test environment P	Single-Carrier Cabinet Power

1 Where P is an appropriate port network number determined from the PORT field of the alarm log.

NOTE:
For environment maintenance, the high or critical reliability system, PPN, or EPN cabinet configuration aspects are irrelevant.

The DC-POWER MO represents all the environmental maintenance for a single-carrier cabinet system. It includes an external power unit and all the port power units in the Port Network. The external power unit can be either a DC or an AC power source. If the external power unit is AC, then the Carrier Port Power Units must be WP-91153 power units. If the external power unit is DC, then the Carrier Port Power Units must be 676B power units. If the hardware detects a problem with any one of these elements, it reports the information to the system software through a single lead. The system software cannot differentiate between different environmental failures. All environmental alarms on a single-carrier cabinet system are logged as a major DC-POWER alarm. Therefore, it is possible to get a DC-POWER alarm when there is still power to the system. The yellow LED on the power unit means operating as normal. If the LED is off, no external power is being supplied or that the power unit has a fault.

NOTE:
Physically removing a Carrier Port Power Unit from a single-carrier cabinet system does not raise a DC-POWER alarm. The removal of the power unit is equivalent to the carrier being physically absent since DC-POWER maintenance cannot distinguish between these two situations.

A single-carrier cabinet system powered by an AC external power source with WP-91153 Carrier Port Power Units has a minimal Nominal Power Holdover (NPH) for the PPN only in standard, high, and critical reliability systems. There is no NPH for a DC- powered PPN or for an AC- or DC-powered EPN. NPH in the PPN of an AC-powered system without high or critical reliability provides full powering for 0.25 seconds, and power to the control complex for an additional two minutes.

WARNING:
Before powering down a cabinet or carrier that contains EMBEDDED AUDIX circuit packs (TN566), first power down the AUDIX unit to avoid damaging the AUDIX software. Instructions for powering down this unit are in the "EMBEDDED AUDIX System Power Procedures" in Chapter 5, "Routine Maintenance Procedures", on the circuit pack, and in EMBEDDED AUDIX documentation.

Error Log Entries and Test to Clear Values

Table 10-190. Single-Carrier Cabinet Power Error Log Entries

Error Type	Aux Data	Associated Test	Alarm Level	On/Off Board	Test to Clear Value
0[1]	0	Any	Any	Any	test environment P sh r 1
513	0	Single-Carrier Cabinet Power Query Test (#79)	MAJOR	ON	test environment P r 2

1 Run the Short Test Sequence first. If all tests pass, run the Long Test Sequence. Refer to the appropriate test description and follow the recommended procedures.

System Technician-Demanded Tests: Descriptions and Error Codes

Always investigate tests in the order presented in the following table. By clearing error codes associated with the *Single-Carrier Cabinet Power Query Test*, for example, you may also clear errors generated from other tests in the testing sequence. Test descriptions and recommended maintenance procedures follow for all errors that can occur during system technician-demanded testing.

Order of Investigation	Short Test Sequence	Long Test Sequence	D/ND[1]
Single-Carrier Cabinet Power Query Test (#79)	X	X	ND
Emergency Transfer Query Test (#124) (a)	X	X	ND
External Alarm Lead Query Test (#120) (b)	X	X	ND
Analog Ring Generator Initialization Test (#117) (c)	X	X	ND
Analog Ring Generator Query Test (#118) (c)	X	X	ND

1 D = Destructive; ND = Nondestructive

Notes:

a. Refer to “EMG-XFER” for a description of this test.

b. Refer to “EXT-DEV” for a description of this test.

c. Refer to “RING-GEN” for a description of this test.

NOTE:
Tests #117 and #118 only show up in the test sequence if there is a TN768 Tone-Clock circuit pack in the port network being tested.

Single-Carrier Cabinet Power Query Test (#79)

This test queries the Maintenance/Tape Processor (in a PPN) or the EPN Maintenance circuit pack (in an EPN) about the status of the power in a single-carrier cabinet system. This test can only detect power problems in carriers in the Port Network for which the Carrier Port Power Unit is physically present.

Table 10-191. TEST #79 Single-Carrier Cabinet Power Query Test

Error Code	Test Result	Description/Recommendation
1000	ABORT	System resources required to run this test are not available. 1. Retry the command at 1minute intervals a maximum of 5 times.
2000	ABORT	Response to the test request was not received within the allowable time period. 1. Retry the command at 1minute intervals a maximum of 5 times. 2. If the test continues to ABORT with Error Code 2000, check for system powering problems with the A cabinet (PPN or EPN). Resolve all DC-POWER alarms. Then, repeat the test. If the test continues to ABORT with a 2000 Error Code, resolve all DUPINT (Duplication Interface Circuit Pack) errors in a PPN for a high or critical reliability system, or MAINT (EPN Maintenance circuit pack) errors in an EPN. Then, repeat the test.

Continued on next page

Table 10-191. TEST #79 Single-Carrier Cabinet Power Query Test — *Continued*

Error Code	Test Result	Description/Recommendation
2029	ABORT	Internal system error 1. Retry the command at 1-minute intervals a maximum of 5 times.
1	FAIL	There is a problem with the environment of the power system. 1. The power unit for any one of the cabinets may have been lost. a. Verify and, if necessary, restore power units for each cabinet. b. Rerun the test. If the test still fails, proceed to Step 2. 2. Either the WP-91153 AC power unit or the 676B DC power unit for one of the cabinets could be defective. Refer to the “Removing Power” and “Restoring Power” sections in Chapter 5, “Routine Maintenance Procedures”. a. If the yellow LED on the WP-91153 AC power unit or the 676B DC power unit is off, replace the power unit. b. If the Active Tone-Clock circuit pack loses power, the system performs a Cold-2 restart to finish (the login prompt appears at the administration terminal). c. Rerun the test. If the test still fails, proceed with Step 3. 3. The DUPINT (Duplication Interface Circuit Pack), or the MAINT (EPN Maintenance Circuit Pack) could be incorrectly reporting this error. Resolve all alarms on these MOs, and rerun the test. There are failures that can occur on the Duplication Interface and EPN Maintenance circuit pack that **are not** detected by the respective maintenance, but that cause many, if not all, environment tests to fail. If many environment tests are failing, the suspect circuit pack, depending on the system configuration, should be replaced and the test rerun.
	PASS	The DUPINT (Duplication Interface Circuit Pack), or the MAINT (EPN Maintenance Circuit Pack) has reported no problem with the power.

DETR-BD

MO Name (in Alarm Log)	Alarm Level	Initial Command to Run[1]	Full Name of MO
DETR-BD	MINOR	test board PCSS	Tone Detector Circuit Pack
DETR-BD	WARNING	test board PCSS	Tone Detector Circuit Pack

1 Where P is the port network number (1 for PPN, 2 for EPN, and 3 for EPN2); C is the carrier number (for example, A, B, C, D, or E); SS is the address of the slot in the carrier where the circuit pack is located (for example, 01, 02, etc.).

G1, G3iV1.1-286, and those G3iV2-386 systems that use the Mu-law companding mode use TN748 Tone Detector circuit packs or TN756 combination Tone Detector-Tone-Clock circuit packs. G3iV2-386 systems that use the A-Law companding mode use TN420B (and higher suffixes) Tone Detector circuit packs. The companding mode of the DETR-BD circuit pack must match that administered for the system for proper tone detection. The companding mode is administered on the System-Parameters Country-Options form. Refer to the *Administrator's Guide for Avaya MultiVantage Software*.

For all DETR-BD circuit pack level errors, refer to XXX-BD (Common Port Board) Maintenance documentation.

DID-BD (Direct Inward Dial Trunk Circuit Pack)

MO Name (in Alarm Log)	Alarm Level	Initial Command to Run[1]	Full Name of MO
DID-BD	MIN	test board PCSS sh	Direct Inward Dial Trunk Circuit Pack
DID-BD	WRN	test board PCSS sh	Direct Inward Dial Trunk Circuit Pack

1 Where P is the port network number (1 for PPN and 2 or; C is the carrier designation (for example, A, B, C, D, or E); and SS is the address of the slot in the carrier where the circuit pack is located (for example, 01, 02, etc.).

Refer to XXX-BD (Common Port Circuit Pack) Maintenance documentation for circuit pack level errors. See also DID-TRK (DID Trunk) Maintenance documentation for related trunk information.

DID-DS1 (DS1 DID Trunk)

MO Name (in Alarm Log)	Alarm Level	Initial Command to Run	Full Name of MO
DID-DS1	MAJOR[1]	test trunk <grp>/<mbr> l	Direct Inward Dial Trunk
DID-DS1	MINOR	test trunk <grp>/<mbr> l	Direct Inward Dial Trunk
DID-DS1	WARNING	test trunk <grp>/<mbr>	Direct Inward Dial Trunk

1 A major alarm on a trunk indicates that alarms on these trunks are not downgraded by **set options** and that at least 75 percent of the trunks in this trunk group are alarmed.

The DID-DS1 trunk provides a digital DID trunk from a CO switch into the system through a DS1 link. A 24 channel DS1 link can support up to 24 DID-DS1 trunk calls simultaneously. A 32 channel DS1 link [G3iV2-386] can support up to 30 DID-DS1 trunk calls simultaneously. A DID-DS1 trunk can be used for both voice and data communications with appropriate DS1 signaling mode (for example, common channel signaling). Only the TN767 and TN464 DS1 Interface circuit packs support the DID-DS1 trunk call processing signalings, wink-start, and immediate-start.

DID-DS1 trunk maintenance provides a means to maintain a DID trunk on a port of DS1 Interface circuit pack. Information included covers the in-line errors log, initialization tests, periodic tests, system technician demand tests, and alarms escalation and elimination. Two trunk service states are specified in the DID-DS1 trunk maintenance. They are: *out-of-service*, the trunk is in a deactivated state and can't be used for incoming calls; *in-service*, the trunk is in an activated state and can be used for incoming calls. If the DS1 Interface circuit pack is out-of-service, then all trunks on the DS1 Interface circuit pack are put into out-of-service state and a Warning alarm is raised.

Hardware Error Log Entries and Test to Clear Values

Table 10-192. DID-DS1 Error Log Entries

Error Type	Aux Data	Associated Test	Alarm Level	On/Off Board	Test to Clear Value
0[1]	0	Any	Any	Any	test trunk <grp>/<mbr> sh r 1
1 (a)	Any				
15 (b) 18 (c)	Any	Port Audit and Update Test (#36)	WARNING	OFF	release trunk <grp>/mbr>
130 (d)		None	WARNING	ON	test trunk <grp>/<mbr>
257 (e)	57474 57473				
513 (f)	57392	None	MIN/MAJ[2]	OFF	
769 (g)	57393	None	MIN/MAJ[2]	OFF	
1281		Conference Circuit Test (#7)	MAJ/MIN/ WRN[3]	ON	test trunk <grp>/<mbr> l
1537		NPE Crosstalk Test (#6)	MAJ/MIN/ WRN[3]	ON	test trunk <grp>/<mbr> l
1793 (h)				ON	test board PCSS l
2305(i)	50944	None	MIN/MAJ[2]	OFF	
3840 (j)		Port Audit and Update Test (#36)			

1 Run the Short Test Sequence first. If all tests pass, run the Long Test Sequence. Refer to the appropriate test description and follow the recommended procedures.

2 This alarm will only be raised when the System-Parameter Country form has the Base Tone Generator field set to 4 (Italy). This alarm will be a MINOR alarm unless 75% or more trunks in this trunk group are out of service, then the alarm will be upgraded to a MAJOR alarm.

3 Minor alarms on this MO may be downgraded to Warning alarms based on the values used in the **set options** command. If the Minor alarm is not downgraded by the **set options** values, the Minor alarm is upgraded to a Major alarm if 75 percent of the trunks in this trunk group are alarmed.

Notes:

a. DS1 Interface circuit pack detects a hardware error. The Aux Data field contains the Error Type: 57476, on-hook before wink; 57477, on-hook before ready to receive digits; 57485, wink too short for valid signal. Escalate the error.

b. This is a software audit error that does not indicate any hardware malfunction. Run the Short Test Sequence and investigate errors (if any).

c. System Technician has busied out the trunk to out-of-service state. No calls can be made on this trunk.

d. This error type indicates that the circuit pack has been removed or has been insane for more than 11 minutes. To clear the error, reinsert or replace the circuit pack.

e. DS1 Interface circuit pack detects a hardware error. The Aux Data field contains the Error Type: 57474, rotary dial rate above 12 pulses per second; 57473, rotary dial rate below eight pulses per second. Escalate the error.

f. DS1 Interface circuit pack detects a hardware error. The Aux Data field contains the Error Type: 57392, no external release on PBX disconnect. Escalate the error.

g. DS1 Interface circuit pack detects a hardware error. The Aux Data field contains the Error Type: 57393, belated external release on PBX disconnect. Escalate the error.

h. DS1 Interface circuit pack is out-of-service. Look for DS1-BD errors in Hardware Error Log. Refer to the DS1-BD (DS1 Trunk Circuit Pack) Maintenance documentation for details.

i. Error Type 2305—This error indicates that a signaling change was detected by the PBX trunk circuit pack which is inconsistent with the present state of the trunk.

j. Port Audit and Update Test (#36) failed due to an internal system error. Enter **status trunk** command to verify the status of the trunk. If the trunk is out-of-service, then enter the **release trunk** command to put it back to in-service. Retry the test command.

System Technician-Demanded Tests: Descriptions and Error Codes

Always investigate tests in the order they are presented in the table below when inspecting errors in the system. By clearing error codes associated with the *NPE Crosstalk Test,* for example, you may also clear errors generated from other tests in the testing sequence.

Order of Investigation	Short Test Sequence	Long Test Sequence	D/ND[1]
NPE Crosstalk Test (#6)		X	ND
Conference Circuit Test (#7)		X	ND
Port Audit and Update Test (#36)		X	ND

1 D = Destructive; ND = Nondestructive

NPE Crosstalk Test (#6)

One or more NPEs reside on each circuit pack with a TDM Bus interface. The NPE controls port connectivity and gain, and provides conferencing functions on a per-port basis. The NPE Crosstalk Test verifies that this port's NPE channel talks on the selected time slot and never crosses over to time slots reserved for other connections. If the NPE is not working correctly, one-way and noisy connections may be observed. This test is usually only part of a port's Long Test Sequence and takes about 20 to 30 seconds to complete.

Table 10-193. TEST #6 NPE Crosstalk Test

Error Code	Test Result	Description/Recommendation
	ABORT	System resources required for this test are not available. 1. Retry the command at 1-minute intervals a maximum of 5 times.
1000	ABORT	System resources required to run this test were not available. The port may be busy with a valid call. Use the **display port PCSSpp** command to determine the trunk group/member number of the port. Use the **status trunk** command to determine the service state of the port. If the service state indicates that the port is in use, then the port is unavailable for certain tests. You must wait until the port is idle before retesting. 1. If the port status is active but the port is not in use (no calls), check the error log for error type 1025 (see the Error Log table for a description of this error and required actions). The port may be locked up. 2. If the port status is idle, retry the command at 1 minute intervals for a maximum of 5 times.
1001	ABORT	System resources required for this test are not available. 1. Retry the command at 1-minute intervals a maximum of 5 times.
1002	ABORT	The system could not allocate time slots for the test. The system may be under heavy traffic conditions or it may have time slots out-of-service due to TDM BUS error. Refer to TDM-BUS (TDM Bus) Maintenance documentation to diagnose any active TDM Bus errors. 1. If system has no TDM-BUS errors and is not handling heavy traffic, repeat test at 1-minute intervals a maximum of 5 times.

Continued on next page

Table 10-193. TEST #6 NPE Crosstalk Test — *Continued*

Error Code	Test Result	Description/Recommendation
1003	ABORT	The system could not allocate a tone receiver for the test. The system may be oversized for the number of Tone Detectors present or some Tone Detectors may be out-of-service. 1. Look for TTR-LEV errors in the Error Log. If present, refer to TTR-LEV (TTR Level) Maintenance documentation. 2. Look for TONE-PT errors in the Error Log. If present, refer to TONE-PT (Tone Generator) Maintenance documentation. 3. If neither condition exists, retry the test at 1-minute intervals a maximum of 5 times.
1004	ABORT	The port was seized by a user for a valid call. Use the **display port PCSSpp** command to determine the trunk group/member number of the port. Use the **status trunk** command to determine the service state of the port. If the service state indicates that the port is in use, then the port is unavailable for certain tests. You must wait until the port is idle before retesting. 1. If the port status is idle, retry the command at 1 minute intervals for a maximum of 5 times.
1020	ABORT	The test did not run due to a previously existing error on the specific port or a more general circuit pack error. 1. Examine Error Log for existing errors against this port or the circuit pack and attempt to diagnose the previously existing error.
2000	ABORT	Response to the test request was not received within the allowable time period.
2100	ABORT	System resources required for this test are not available. 1. Retry the command at 1-minute intervals a maximum of 5 times.
2053	ABORT	At least one of the following errors is found on the DS1 circuit pack: 1281—Loss of signal, 1793—Blue Alarm, 2049—Red Alarm, 2305—Yellow Alarm, 1537—Hyperactivity. Look for the above error types in the Hardware Error Log and follow the procedures given in the appropriate DS1-BD or UDS1-BD maintenance documentation for the listed error types.

Continued on next page

Table 10-193. TEST #6 NPE Crosstalk Test — *Continued*

Error Code	Test Result	Description/Recommendation
ANY	FAIL	The test failed. This can be due to on-board or off-board problems. Off-board problems of concern include EXP-PN and EXP-INTF faults, TDM-BUS faults, and faults associated with the tone detectors/tone generators. Clear all off-board problems before replacing the board. Keep in mind that a TDM-BUS problem is usually the result of a faulty board connected to the backplane or bent pins on the backplane. 1. Look for EXP-PN and/or EXP-INTF errors in the error log. If present, refer to the EXP-PN and the EXP-INTF Maintenance documentation. 2. Look for TDM-BUS errors in the error log. If present, refer to the TDM-BUS Maintenance documentation. 3. Look for TONE-BD and/or TONE-PT errors in the error log. If present, refer to the TONE-BD and the TONE-PT Maintenance documentation. 4. Retest when the faults from steps 1, 2, and 3 are cleared. Replace the board only if the test fails.
	PASS	The port is correctly using its allocated time slots. User-reported troubles on this port should be investigated using other port tests and by examining station, trunk, or external wiring.
0	NO BOARD	The test could not relate the internal ID to the port (no board). This could be due to incorrect translations, no board is inserted, an incorrect board is inserted, or an insane board is inserted. 1. Check to ensure that the board translations are correct. Use the **list config** command and resolve any problems that are found. 2. If the board was found to be correctly inserted in step 1, issue the **busyout board** command. 3. Issue the **reset board** command. 4. Issue the **release busy board** command. 5. Issue the **test board long** command. This should re-establish the linkage between the internal ID and the port. If this is not the case, check to see that there is a valid board inserted.

Conference Circuit Test (#7)

One or more NPEs reside on each circuit pack with a TDM Bus interface. The NPE controls port connectivity and gain, and provides conferencing functions on a per-port basis. The Conference Circuit Test verifies that the NPE channel for the port being tested can correctly perform the conferencing function. The NPE is instructed to listen to several different tones and conference the tones together. The resulting signal is then measured by a Tone Detector port. If the level of the tone is within a certain range, the test passed.

Table 10-194. TEST #7 Conference Circuit Test

Error Code	Test Result	Description/Recommendation
	ABORT	Could not allocate the necessary system resources to run this test. 1. Retry the command at 1-minute intervals a maximum of 5 times.
1000	ABORT	System resources required to run this test were not available. The port may be busy with a valid call. Use the **display port PCSSpp** command to determine the trunk group/member number of the port. Use the **status trunk** command to determine the service state of the port. If the service state indicates that the port is in use, then the port is unavailable for certain tests. You must wait until the port is idle before retesting. 1. If the port status is active but the port is not in use (no calls), check the error log for error type 1025 (see the Error Log table for a description of this error and required actions). The port may be locked up. 2. If the port status is idle, retry the command at 1 minute intervals for a maximum of 5 times. 3. If the test continues to abort, escalate the problem.
1002	ABORT	The system could not allocate time slots for the test. The system may be under heavy traffic conditions, or it may have time slots out of service due to TDM-BUS errors. Refer to the TDM-BUS (TDM bus) Maintenance documentation to diagnose any active TDM-BUS errors. 1. If the system has no TDM-BUS errors and is not handling heavy traffic and the port status is idle, retry the command at 1 minute intervals for a maximum of 5 times.

Continued on next page

Table 10-194. TEST #7 Conference Circuit Test — *Continued*

Error Code	Test Result	Description/Recommendation
1003	ABORT	The system could not allocate a tone receiver for the test. The system may be oversized for the number of tone detectors present or some of the tone detectors may be out of service. Issue the **list measurements tone-receiver** command to display basic information about the system's tone receivers. 1. Look for TTR-LEV errors in the error log. If present, refer to the TTR-LEV Maintenance documentation. 2. Look for TONE-PT errors in the error log. If present, refer to the TONE-PT Maintenance documentation. 3. If neither condition exists, retry the test at 1 minute intervals for a maximum of 5 times.
1004	ABORT	The port was seized by a user for a valid call. Use the **display port PCSSpp** command to determine the trunk group/member number of the port. Issue the **status trunk** command to determine the service state of the port. If the service state indicates that the port is in use, then the port is unavailable for certain tests. You must wait until the port is idle before retesting. 1. If the port status is idle, retry the command at 1 minute intervals for a maximum of 5 times.
1018	ABORT	The test was disabled via translation. You may want to determine why the test has been disabled before you enable it. 1. Verify that the 'Maintenance Test' field on the 'Trunk Administration' screen is set to 'n'. To enable the test, change the trunk administration and enter 'y' into the 'Maintenance Test' field. 2. Repeat the test.
1020	ABORT	The test did not run due to a previously existing error on the specific port or a more general circuit pack error. 1. Examine Error Log for existing errors against this port or the circuit pack and attempt to diagnose the previously existing error.
2000	ABORT	Response to the test request was not received within the allowable time period.
2100	ABORT	Could not allocate the necessary system resources to run this test. 1. Retry the command at 1-minute intervals a maximum of 5 times.

Continued on next page

Table 10-194. TEST #7 Conference Circuit Test — *Continued*

Error Code	Test Result	Description/Recommendation
2053	ABORT	At least one of the following errors is found on the DS1 circuit pack: 1281—Loss of signal, 1793—Blue Alarm, 2049—Red Alarm, 2305—Yellow Alarm, 1537—Hyperactivity. Look for the above error types in the Hardware Error Log and follow the procedures given in the appropriate DS1-BD or UDS1-BD maintenance documentation for the listed error types.
Any	FAIL	The NPE of the tested port did not conference the tones correctly. This can cause noisy and unreliable connections. 1. Enter the **list configuration board UUCSS** command. If the circuit pack is a TN767B vintage 8 or 9, replace the circuit pack with a TN767C V3 or later. The error log may have error type 1281. 2. Test all administered trunks on the board. If one fails, this could be an off-board problem (such as an incoming seizure or an off-hook port seizure during the test). Retest the board. 3. If all of the ports fail, check the CARR-POW (see note below). 4. If several ports fail, check the error log for TONE-BD or TONE-PT errors. If there are such errors, take the appropriate action. When the TONE errors have cleared, rerun the test. 5. If the retry passes and troubles have been reported, coordinate isolation with the CO. Make sure that the switch, the CO, and any NTCE equipment (the CSUs) have the correct administration. 6. Replace the circuit pack. **NOTE:** If the conference circuit test fails for all ports on a circuit pack, a -5 volt power problem is indicated. If a TN736 or TN752 power unit circuit pack is present, either the 631DB AC power unit or the 676B DC power unit may be defective. (The 631DB power unit is used in a medium cabinet powered by an AC source. The 645B power unit is used in a medium cabinet powered by a DC power source.) The system may contain a TN736 or TN752 power unit or a 631DB AC power unit, but not both types of power units. To investigate problems with a 631DB AC power unit, refer to the 'CARR-POW (carrier port power unit for AC-powered systems) Maintenance Documentation'. To investigate problems with a 645B DC power unit, refer to the 'CARR-POW (carrier port power unit for DC-powered systems) Maintenance Documentation'. If a red LED on TN736 or TN752 power unit circuit pack is on, replace the pack.

Continued on next page

Table 10-194. TEST #7 Conference Circuit Test — *Continued*

Error Code	Test Result	Description/Recommendation
	PASS	The port can correctly conference multiple connections. User-reported troubles on this port should be investigated using other port tests and by examining station, trunk, or external wiring. **NOTE:** This test always passes for TN712 Analog circuit packs prior to Vintage 14 and for TN742 prior to Vintage 4.
0	NO BOARD	The test could not relate the internal ID to the port (no board). This could be due to incorrect translations, no board is inserted, an incorrect board is inserted, or an insane board is inserted. 1. Check to ensure that the board translations are correct. Use the **llst config** command and resolve any problems that are found. 2. If the board was found to be correctly inserted in step 1, issue the **busyout board** command. 3. Issue the **reset board** command. 4. Issue the **release busy board** command. 5. Issue the **test board long** command. This should re-establish the linkage between the internal ID and the port. If this is not the case, check to see that there is a valid board inserted.

Port Audit and Update Test (#36)

This test sends port level translation data from the switch processor to the DS1 Interface circuit pack to assure that the trunk's translation is correct. Translation updates include the following data: trunk type (in/out), dial type, timing parameters, and signaling bits enabled. The port audit operation verifies the consistency of the current state of the trunk as kept in the DS1 Interface circuit pack and in the switch software.

Table 10-195. TEST #36 Port Audit and Update Test

Error Code	Test Result	Description/Recommendation
	ABORT	Internal System Error. 1. Retry the command at 1-minute intervals a maximum of 5 times.
1000	ABORT	The port may be busy with a valid call. Issue the **display port PCSSpp** command to determine the trunk group/member number of the port. Use the **status trunk** command to determine the service state of the port. If the service state indicates that the port is in use, then the port is unavailable for certain tests. You must wait until the port is idle before retesting. 1. If the port status is active but the port is not in use (no calls), check the error log for error type 1025 (see the Error Log table for a description of this error and required actions). The port may be locked up. 2. If the port status is idle, retry the command at 1 minute intervals for a maximum of 5 times.
1006	ABORT	The test was aborted because the trunk is out of service. 1. Use the **status trunk** command to verify that the trunk is out of service. 2. If the trunk is out of service, determine why. 3. If it is OK to put the trunk back in service, issue the **release trunk** command to put the trunk back in service, and then retry the test.
2000	ABORT	Response to the test was not received within the allowable time period.
2100	ABORT	Could not allocate resources to run this test. 1. Retry the command at 1 minute intervals for a maximum of 5 times.

Continued on next page

Table 10-195. TEST #36 Port Audit and Update Test — *Continued*

Error Code	Test Result	Description/Recommendation
	FAIL	Test failed due to Internal System Error. 1. Retry the command at 1-minute intervals a maximum of 5 times.
	PASS	Trunk translation has been updated successfully. The current trunk states kept in the DS1 Interface circuit pack and switch software are consistent. If the trunk is busied out, the test does not run, but returns PASS. To verify that the trunk is in-service: 1. Enter **status-command** to verify that the trunk is in-service. If the trunk is in-service, no further action is necessary. If the trunk is out-of-service, continue to Step 2. 2. Enter **release-trunk** command to put trunk back into in-service. 3. Retry the test command.
0	NO BOARD	The test could not relate the internal ID to the port (no board). This could be due to incorrect translations, no board is inserted, an incorrect board is inserted, or an insane board is inserted. 1. Check to ensure that the board translations are correct. Use the **list config** command, and resolve any problems that are found. 2. If the board was found to be correctly inserted in step 1, issue the **busyout board** command. 3. Issue the **reset board** command. 4. Issue the **release busy board** command. 5. Issue the **test board long** command. This should re-establish the linkage between the internal ID and the port. If this is not the case, check to see that there is a valid board inserted.

DID-TRK (DID Trunk)

MO Name (in Alarm Log)	Alarm Level	Initial Command to Run[1]	Full Name of MO
DID-TRK	MAJOR[2]	test port PCSSpp l	DID Trunk
DID-TRK	MINOR	test port PCSSpp l	DID Trunk
DID-TRK	WARNING	test port PCSSpp l	DID Trunk

1 Where P is the port network number (1 for PPN and 2 or 3 for EPN); C is the carrier designation (for example, A, B, C, D, or E); and SS is the address of the slot in the carrier where the circuit pack is located (for example, 01, 02, etc.).

2 A MAJOR alarm on a trunk indicates that alarms on these trunks are not downgraded by the **set options** command and that at least 75 percent of the trunks in this trunk group are alarmed.

Direct Inward Dial (DID) trunks coming from the Central Office (CO) allow outside parties to call directly to an extension in the system. DID Trunk circuit packs include:

TN753 [G1, G3iV1.1-286, G3iV2-386]	United States
TN2146 [G3iV2-386]	Belgium and the Netherlands
TN2139 [G3iV2-386]	Italy
TN 436 [G3iV2-386]	Australia
TN459 [G3iV2-386]	United Kingdom

The DID Trunk circuit packs support eight, incoming-only, ports. Each port provides an interface between the 2-wire analog line from the CO and the DEFINITY system. The DID port receives 3 to 5 digits from the CO that is used to directly connect an outside caller to the called station without assistance from an attendant. See Figure 10-25.

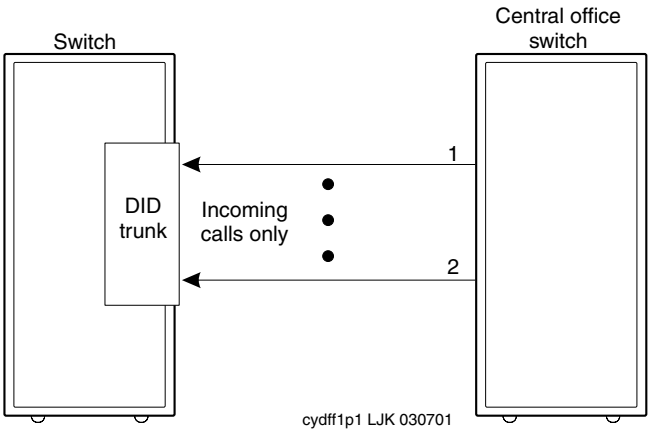

Figure 10-24. DID Trunk Interactions

For each call, the CO switch signals the system by opening and closing individual DID loops (one of the eight ports) and causing the starting or stopping of loop current.

A DID trunk operation involves three significant aspects:

1. Transmission—deals with the interface requirements regarding all AC signals. Transmission includes gain, analog to digital encoding, and digital to analog decoding.
2. Signaling—involves interpretation of DC signals appearing on Tip and Ring to and from the CO. These signals include off-hook, on-hook, and dial pulse detection.
3. Switch Connection—involves the connection between the trunk circuitry and the TDM Bus of the system. It operates the switchhook connection to the TDM Bus.

Four tests are implemented to diagnose the health of a DID trunk. All of them test on-board circuitry only. They are:

1. Loop Around and Conference Circuit Test—verifies the transmission operation of the circuit pack (loop around within the port), and checks the conference capabilities of all ports.

   This test may fail due to noise induced by adjacent electric power lines. Customers having this problem should resolve it with their local power company. To temporarily alleviate the alarm caused by the failure of this test, the test may be disabled from trunk administration Test field. (This also disables the port diagnostic test).

2. NPE Crosstalk Test—verifies the switch connection operation of the circuit pack. The test also verifies that the trunk circuitry only talks on the selected time slot on the TDM Bus and never crosses over to time slots reserved for other connections.
3. Port Diagnostic Test—the battery feed circuitry is tested for hook detection.
4. Port Audit Update Test—updates the DID translation information on individual ports of the DID trunk. The port translation data consists of signaling parameters whose values depend on the CO switch connected to the trunk. These parameters include:
   - wink (signal indicating PBX is ready to receive digits) or immediate start
   - dial tone or rotary dialing trunk
   - rotary dialing inter-digit timing
   - network balance R/RC
   - disconnect timing

Additional in-line testing is performed while a call is in progress. Thus, in-line errors may occur during operation. See Error Log table for a description of these errors. These errors may be reproduced by using the trunk (that is, placing a call) and checking their occurrence in the Hardware Error Log.

Problems detected during signaling may be caused by faults off-board (in the CO switch or connections) for which a Warning alarm is raised.

Before a maintenance test can be run on a port, the port must be idle. If an incoming call seizes the port which is being tested by maintenance, the test is aborted, and the incoming call proceeds.

For transmission and signaling standard specification, refer to Digital PBX Standards document RS4648.

Hardware Error Log Entries and Test to Clear Values

Table 10-196. DID Trunk Error Log Entries

Error Type	Aux Data	Associated Test	Alarm Level	On/Off Board	Test to Clear Value
0[1]	0	Any	Any	Any	test port PCSSpp sh r 1
1 (a)	Any	None	WRN	OFF	
1 (b)	57476	None	WRN	OFF	

Continued on next page

Table 10-196. DID Trunk Error Log Entries — *Continued*

Error Type	Aux Data	Associated Test	Alarm Level	On/Off Board	Test to Clear Value
1 (c)	57477	None	WRN	OFF	
1 (d)	57483	None	WRN	OFF	
15 (e)	Any	Port Audit Update (#36)			
18	0	busyout trunk <grp/mbr>	WRN	OFF	release trunk <grp/mbr>
130 (f)		None	WRN	ON	test trunk <grp>/<mbr>
257 (g)	57472	None	WRN	OFF	
257 (h)	57473	None	WRN	OFF	
257 (i)	57474	None	WRN	OFF	
257 (j)	57475	None	WRN	OFF	
513 (k)	57392	None	MAJ/MIN/ WRN[2]	OFF	
510 (l)	57393	None			
769	Any	Port Diagnostic (#35)	MAJ/MIN/ WRN[2]	ON	test port PCSSpp r 3
1025		Loop Around and Conference (#33)	MAJ/MIN/ WRN[2]	ON	test port PCSSpp r 3
1281		NPE Crosstalk (#6)	MAJ/MIN/ WRN[2]	ON	test port PCSSpp r 3
1537	Any	Port Diagnostic (#35)	MAJ/MIN/ WRN[2]	OFF	test port PCSSpp r 3
1793 (m)	57489	None	None		

1 Run the Short Test Sequence first. If all tests pass, run the Long Test Sequence. Refer to the appropriate test description and follow the recommended procedures.

2 Minor alarms on this MO may be downgraded to Warning alarms based on the values used in the **set options** command. If the Minor alarm is not downgraded by the **set-options** values, the Minor alarm is upgraded to a Major alarm if 75 percent of the trunks in this trunk group are alarmed.

Notes:

A common trouble on DID trunks, which reports no errors or alarms, occurs when the CO busies out the port (disconnects port). This situation occurs when the CO thinks there are problems with the DID port. In this case, no incoming calls are possible through this port. In addition to complaints received from outside callers trying unsuccessfully to call in, this problem can be diagnosed by listing measurements on lightly used trunks. If a particular port is detected as not in use, a call to the CO is necessary to get the connection back in service.

a. This condition occurs when the tone detector times out waiting for digits.

   1 – Verify trunk administered wink/immediate-start parameter.

   2 – Verify the dial type.

   3 – Refer problem to the CO.

b. Rotary dial before wink – This condition occurs when the CO starts dialing before the PBX sends wink on a wink-start trunk. 1 – Verify trunk administered wink/immediate-start parameter.

   2 – Refer problem to CO.

c. Rotary dial too early – This condition occurs when the CO starts dialing too soon after seizure on an immediate-start trunk.

   1 – Verify trunk administered wink/immediate-start parameter.

   2 – Refer problem to CO.

d. Rotary dial pulse during wink – This condition occurs when the CO sends rotary dial digits too soon after seizure on a wink-start trunk.

   1 – Verify trunk administered wink/immediate-start parameter.

   2 – Refer problem to CO.

e. This is a software audit error that does not indicate any hardware malfunction. Run the Short Test Sequence and investigate associated errors (if any).

f. This error type indicates that the circuit pack has been removed or has been insane for more than 11 minutes. To clear the error, reinsert or replace the circuit pack.

g. Rotary dial pulse on-hook longer than 105 msec – Break between rotary pulses is too long.

   1 – Test trunk by performing an incoming test call.

   2 – Refer problem to CO.

h. Rotary dial rate below eight pulses/sec – More than 135 msec between two successive breaks.

   1 – Verify trunk administered interdigit-timing parameters.

   2 – Refer problem to CO.

i. Rotary dial rate above 12 pulses/sec – Less than 75 msec between two successive breaks.

   1 – Verify trunk administered interdigit-timing parameters.

   2 – Refer problem to CO.

j. Digit detection – Co is starting new rotary dial digit within 150 msec of previous digit.

   1 – Verify trunk administered interdigit timing parameters.

   2 – Refer problem to CO.

k. Loop current active – CO not releasing trunk after PBX disconnect. Occurs when the PBX end drops first and the CO does not release the trunk within four minutes.

   1 – Verify the interface to the network with a hand telephone set. If calls are placed correctly, then refer problem to the CO.

   2 – If unable to place calls or this equipment is not available, check the status on port using the **status trunk** command. If active but not connected, disconnect bridging clips at the network interface. Check status on the trunk. If trunk went idle, then replace clips. If trunk is still active but unable to place calls, refer problem to the CO.

l. Late CO trunk release – This event only happens after the occurrence of Error Type 513. The CO released the trunk four minutes after the PBX dropped the call. This event decrements the severity (error count) of Error Type 513, or may mean the problem related to Error Type 513 has been fixed.

   1 – Verify that Error Type 513 does not occur again. Refer to Error 513.

m. Incomplete Dial timer expired. This error applies only to the TN459. Problem with incoming dialing stream. Refer problem to the CO.

System Technician-Demanded Tests: Descriptions and Error Codes

Always investigate tests in the order presented in the table below when inspecting errors in the system. By clearing error codes associated with the *DID-TRK Loop Around and Conference Circuit Test,* for example, you may also clear errors generated from subsequent tests in the testing sequence.

Order of Investigation	Short Test Sequence	Long Test Sequence	D/ND[1]
NPE Crosstalk Test (#6)		X	ND
Port Diagnostic Test (#35)	X	X	ND
Loop Around and Conference Circuit Test (#33)		X	ND
Port Audit Update Test (#36)	X	X	ND

1 D = Destructive; ND = Nondestructive

NPE Crosstalk Test (#6)

One or more NPEs reside on each circuit pack with a TDM Bus interface. The NPE controls port connectivity and gain, and provides conferencing functions on a per-port basis. The NPE Crosstalk Test verifies that this port's NPE channel talks on the selected time slot and never crosses over to time slots reserved for other connections. If the NPE is not working correctly, one-way and noisy connections may be observed. This test is usually only part of a port's Long Test Sequence and takes about 20 to 30 seconds to complete.

Table 10-197. TEST #6 NPE Crosstalk Test

Error Code	Test Result	Description/Recommendation
	ABORT	Could not allocate the necessary system resources to run this test. 1. Retry the command at 1-minute intervals a maximum of 5 times.
1000	ABORT	System resources required to run this test are not available. The port may be busy with a valid call. Use the **display port PCSSpp** command to determine the station extension, attendant number, or trunk group/member number of the port. Use the **status station**, **status attendant**, or **status trunk** command to determine the service state of the port. If the service state indicates that the port is in use, then the port is unavailable for certain tests. (Refer to the "Status Commands" section in Chapter 10, "Maintenance Commands and Trouble-Clearing Aids", for a full description of all possible states.) You must wait until the port is idle before retesting. Attendants are always in use (off-hook) if the handset is plugged in and the port is not busied out. 1. If the port status is active but the port is not in use (no calls), then check the Error Log for Error Type 513 (see Error Log table for description of this error and required actions). The port may be locked up. 2. If the port status is idle, then retry the command at 1-minute intervals a maximum of 5 times.
1001	ABORT	Could not allocate the necessary system resources to run this test. This could be due to a failure to seize the port. 1. Retry the command at 1-minute intervals a maximum of 5 times.

Continued on next page

Table 10-197. TEST #6 NPE Crosstalk Test — *Continued*

Error Code	Test Result	Description/Recommendation
1002	ABORT	The system could not allocate time slots for the test. The system may be under heavy traffic conditions or it may have time slots out-of-service due to TDM-BUS errors. Refer to TDM-BUS (TDM Bus) Maintenance documentation to diagnose any active TDM-BUS errors. 1. If system has no TDM-BUS errors and is not handling heavy traffic, repeat test at 1-minute intervals a maximum of 5 times.
1003	ABORT	The system could not allocate a tone receiver for the test. The system may be oversized for the number of Tone Detectors present or some Tone Detectors may be out-of-service. 1. Look for TTR-LEV errors in the Error Log. If present, refer to TTR-LEV (TTR Level) Maintenance documentation. 2. Look for TONE-PT errors in the Error Log. If present, refer to TONE-PT (Tone Generator) Maintenance documentation. 3. If neither condition exists, retry the test at 1-minute intervals a maximum of 5 times.
1004	ABORT	The port was seized by a valid call during the test. The test has been aborted. Use the **display port PCSSpp** command to determine the station extension, attendant number, or trunk group/member number of the port. Use the **status station**, **status attendant**, or **status trunk** command to determine the service state of the port. If the service state indicates that the port is in use, then the port is unavailable for certain tests. (Refer to the “Status Commands” section in Chapter 10, “Maintenance Commands and Trouble-Clearing Aids”, for a full description of all possible states.) You must wait until the port is idle before retesting. Attendants are always in use (off-hook) if the handset is plugged in and the port is not busied out. 1. Retry the command at 1-minute intervals a maximum of 5 times. 2. If the test continues to abort and the port is not in use, escalate the problem.
2000	ABORT	Response to the test request was not received within the allowable time period.
2100	ABORT	Could not allocate the necessary system resources to run this test. This could be due to a failure to seize the port. 1. Retry the command at 1-minute intervals a maximum of 5 times.

Continued on next page

Table 10-197. TEST #6 NPE Crosstalk Test — *Continued*

Error Code	Test Result	Description/Recommendation
Any	FAIL	This test can fail due to on-board or off-board problems. Off-board problems of concern include EXP-INTF faults, TDM-BUS faults, and faults associated with the tone detectors/tone generators. Clear all off-board problems before replacing the board. Keep in mind that a TDM-BUS problem is usually the result of a faulty board connected to the backplane or bent pins on the backplane. 1. Look for EXP-INTF errors in the error log. If present, refer to the EXP-INTF Maintenance documentation. 2. Look for TDM-BUS errors in the error log. If present, refer to the TDM-BUS Maintenance documentation. 3. Look for TONE-BD and/or TONE-PT errors in the error log. If present, refer to the TONE-BD Maintenance documentation and the TONE-PT Maintenance documentation. 4. Test the board when the faults from steps 1, 2, and 3 are cleared. Replace the board only if the test fails.
	PASS	The port is correctly using its allocated time slots. User-reported troubles on this port should be investigated using other port tests and by examining station, trunk, or external wiring.
0	NO BOARD	The test could not relate the internal ID to the port (no board). 1. Check to ensure that the board translations are correct. Translate the board, if necessary. 2. Issue the **busyout board** command. 3. Issue the **reset board** command. 4. Issue the **release busy board** command. 5. Issue the **test board** command. This should re-establish the linkage between the internal ID and the port.

Loop Around and Conference Circuit Test (#33)

This test checks the reflective and non-reflective loop around and conference capabilities of a DID port circuit. The test that uses 404-Hz, 1004-Hz, and 2804-Hz tones is an on-board test only. Each tone is separately transmitted to and from the port (loop around within the port) and verified.

This test may fail due to noise induced by adjacent electric power lines. Customers having this problem should resolve it with their local power company.

To temporarily alleviate the alarm caused by the failure of this test, the test may be disabled from trunk administration Test field. (This also disables the port diagnostic test.

Table 10-198. TEST #33 Loop Around and Conference Circuit Test

Error Code	Test Result	Description/Recommendation
	ABORT	Could not allocate the necessary system resources to run this test. This could be due to a failure to seize the port. 1. Retry the command at 1-minute intervals a maximum of 5 times.
3	ABORT	System resources required to run this test are not available. The seized tone detector did not respond. This abort code is usually associated with tone-clock (TONE-BD, TONE-PT, and TDM-CLK) resources. 1. Clear any tone errors in the error log. 2. Retry the command a 1-minute intervals for a maximum of 5 times. 3. If the test continues to abort, escalate the problem.
1000	ABORT	System resources required to run this test are not available. The port may be busy with a valid call. Use the **display port PCSSpp** command to determine the station extension, attendant number, or trunk group/member number of the port. Use the **status station**, **status attendant**, or **status trunk** command to determine the service state of the port. If the service state indicates that the port is in use, then the port is unavailable for certain tests. (Refer to the “Status Commands” section in Chapter 10, “Maintenance Commands and Trouble-Clearing Aids”, for a full description of all possible states.) You must wait until the port is idle before retesting. Attendants are always in use (off-hook) if the handset is plugged in and the port is not busied out. 1. If the port status is active but the port is not in use (no calls), check the Error Log for Error Type 513 (see Error Log table for description of this error and required actions). The port may be locked up. 2. If the port status is idle, then retry the command at 1-minute intervals a maximum of 5 times.

Continued on next page

Table 10-198. TEST #33 Loop Around and Conference Circuit Test — *Continued*

Error Code	Test Result	Description/Recommendation
1004	ABORT	The port was seized by a valid call during the test. The test has been aborted. Use the **display port PCSSpp** command to determine the station extension, attendant number, or trunk group/member number of the port. Use the **status station**, **status attendant**, or **status trunk** command to determine the service state of the port. If the service state indicates that the port is in use, then the port is unavailable for certain tests. (Refer to the “Status Commands” section in Chapter 10, “Maintenance Commands and Trouble-Clearing Aids”, for a full description of all possible states.) You must wait until the port is idle before retesting. Attendants are always in use (off-hook), if the handset is plugged in and the port is not busied out. 1. Retry the command at 1-minute intervals a maximum of 5 times. 2. If the test continues to abort and the port is not in use, escalate the problem.
1018	ABORT	Test disabled via administration. Verify that the “Maintenance Tests?” field on the Trunk Group Form is set to “n.” To enable the test, issue the **change trunk-group x** command where “x” equals the number of the trunk group to be tested. Then change the entry in the “Maintenance Tests?” field on the form to “y.”
2000	ABORT	Response to the test was not received within the allowable time period. 1. Retry the command at 1-minute intervals for a maximum of 5 times.
2100	ABORT	System resources required to run this test are not available. This may be due to the port being seized. 1. This abort code is usually associated with tone-clock (TONE-BD, TONE-PT, and TDM-CLK) resources. First, clear any tone errors in the error log. 2. Retry the command at 1 minute intervals for a maximum of 5 times.

Continued on next page

Table 10-198. TEST #33 Loop Around and Conference Circuit Test — *Continued*

Error Code	Test Result	Description/Recommendation
3	FAIL	The nonreflective 1004 Hz tone test of the port failed. An echo was detected from the port. Poor quality transmission was detected to or from the port. The problem may be off-board.
7		The conference capabilities of the port failed. Poor quality transmission was detected to or from the port. The problem may be off-board.
129		The reflective 404-Hz tone test failed. Poor quality transmission was detected to or from the port. The problem may be off-board.
131		The reflective 1004-Hz tone test failed. Poor quality transmission was detected to or from the port. The problem may be off-board.
133		The reflective 2804-Hz tone test failed. Poor quality transmission was detected to or from the port. The problem may be off-board. **CAUTION:** *The port may still be operational, or the fault may be off-board (connections or CO). Off-board problems also include incoming seizures or off-hook port seizures during the test and, perhaps somewhat unlikely, noise induced by adjacent electric power lines. Customers having this problem should resolve it with their local power company to temporarily alleviate the alarm caused by the failure of this test. The test may be disabled from trunk administration 'Test' field. This turns off all testing for that trunk group except for tests 6 and 36.* *More information continues on the next page.*

Continued on next page

Table 10-198. TEST #33 Loop Around and Conference Circuit Test — *Continued*

Error Code	Test Result	Description/Recommendation
3 7 129 131 133 *(cont'd.)*	FAIL *(cont'd.)*	FAULT ISOLATION: Proceed as follows unless power or tone problems are suspected (see note below). 1. To make sure the problem is on-board, disconnect the port from the far-end and retry the test. Coordinate this with the CO, or do it after busy hours. 2. If the retry fails, replace the circuit pack. 3. If the retry passes and no troubles have been reported, disable the test in the trunk group administration. If the retry passes and troubles have been reported, coordinate isolation with the CO. **NOTE:** If the loop around and conference circuit test fails for all ports on a circuit pack, a -5 volt power problem is indicated. If a TN736 or TN752 power unit circuit pack is present, either the 631DB AC power unit or the 676B DC power unit may be defective. (The 631DB power unit is used in a medium cabinet powered by an AC source. The 645B power unit is used in a medium cabinet powered by a DC power source.) The system may contain a TN736 or TN752 power unit circuit pack or a 631DB AC power unit, but not both types of power units. To investigate problems with a 631DB AC power unit, refer to the CARR-POW (carrier port power unit for AC-powered systems) Maintenance documentation. To investigate problems with a 645B DC power unit, refer to the CARR-POW (carrier port power unit for DC-powered systems) Maintenance documentation. If a red LED on TN736 or TN752 power unit circuit pack is on, replace the pack. If the test fails on more than 1 port, check for errors on the TONE-BD or the TONE-PT. If errors, take appropriate actions. When the tone errors are cleared, rerun the test. If the test fails again, see 'FAULT ISOLATION' above.
	PASS	DID Trunk Loop Around and Conference Test is successful. This port is functioning properly. 1. If users are reporting troubles, examine loop connections to the port and refer problem to the CO.

Continued on next page

Table 10-198. TEST #33 Loop Around and Conference Circuit Test — *Continued*

Error Code	Test Result	Description/Recommendation
0	NO BOARD	The test could not relate the internal ID to the port (no board). 1. Check to ensure that the board translations are correct. Translate the board, if necessary. 2. Issue the **busyout board** command. 3. Issue the **reset board** command. 4. Issue the **release busy board** command. 5. Issue the **test board** command. This should re-establish the linkage between the internal ID and the port.

Port Diagnostic Test (#35)

This test checks a port's battery feed circuitry. The battery feed circuitry is tested for on-/off-hook detection, battery shutdown, and battery reversal (WINK) capabilities.

Table 10-199. TEST #35 Port Diagnostic Test

Error Code	Test Result	Description/Recommendation
	ABORT	System resources required to run this test were not available. 1. Retry the command at 1-minute intervals a maximum of 5 times.
1000	ABORT	System resources required to run this test were not available. The port may be busy with a valid call. Use the **display port PCSSpp** command to determine the trunk group/member number of the port. Use the **status trunk** command to determine the service state of the port. If the service state indicates that the port is in use, then the port is unavailable for certain tests. You must wait until the port is idle before retesting. 1. If the port status is active but the port is not in use (no calls), then check the error log for error type 513 (refer to the Error Log table for a description of this error and required actions). The port may be locked up. 2. If the port status is idle, busyout and release the trunk, and then retry the command at 1-minute intervals for a maximum of 5 times. 3. If the test continues to abort, check for wiring errors toward the CO which may cause the trunk to lock up. 4. If the wiring is OK and the test continues to abort, replace the TN753.

Continued on next page

Table 10-199. TEST #35 Port Diagnostic Test — *Continued*

Error Code	Test Result	Description/Recommendation
1004	ABORT	The port was seized by a valid call during the test. The test has been aborted. Use the **display port PCSSpp** command to determine the station extension, attendant number, or trunk group/member number of the port. Use the **status station**, **status attendant**, or **status trunk** command to determine the service state of the port. If the service state indicates that the port is in use, then the port is unavailable for certain tests. (Refer to the "Status Commands" section in Chapter 10, "Maintenance Commands and Trouble-Clearing Aids", for a full description of all possible states.) You must wait until the port is idle before retesting. Attendants are always in use (off-hook) if the handset is plugged in and the port is not busied out. 1. Retry the command at 1-minute intervals a maximum of 5 times. 2. If the test continues to abort and the port is not in use, escalate the problem.
1018	ABORT	Test has been disabled by trunk group administration. Verify that the "Maintenance Tests?" field on the Trunk Group Form is set to "n." To enable the test, issue the **change trunk-group x** command where "x" equals the number of the trunk group to be tested. Then change the entry in the "Maintenance Tests?" field on the form to "y."
2000	ABORT	Response to the test request was not received within the allowable time period.
2100	ABORT	Could not allocate the necessary system resources to run this test. 1. Retry the command at 1-minute intervals a maximum of 5 times.
61446	FAIL	Battery feed test failed. A loop current fault was detected. This is most probably an incoming CO-line problem. This failure code is only reported by the TN2139 Italian DID circuit pack. 1. Check the incoming CO-line for loop current. If none is detected refer the problem to the CO. 2. If the CO-line checks out OK, the failure must be on the DID port. Replace the circuit pack.
61456	FAIL	Battery feed test failed. An on-board problem was detected. This port is out-of-service. 1. Replace circuit pack.

Continued on next page

Table 10-199. TEST #35 Port Diagnostic Test — *Continued*

Error Code	Test Result	Description/Recommendation
61472	FAIL	Battery feed test failed. A problem with the incoming CO-line was detected. 1. Check the incoming CO-line for proper operation. If warranted, refer the problem to the CO. 2. If the CO-line checks out OK, the failure must be on the DID port. Replace the circuit pack.
	PASS	Current flow was detected for this port. 1. User-reported troubles on this port should be investigated using other port tests and by examining connections. 2. Refer problem to the CO.
0	NO BOARD	The test could not relate the internal ID to the port (no board). 1. Check to ensure that the board translations are correct. Translate the board, if necessary. 2. Issue the **busyout board** command. 3. Issue the **reset board** command. 4. Issue the **release busy board** command. 5. Issue the **test board** command. This should re-establish the linkage between the internal ID and the port.

Port Audit Update Test (#36)

This test sends updates of the DID port translation for all ports on the circuit pack that have been translated. The update is non-disruptive and guards against possible corruption of translation data contained on the circuit pack. No response message is expected from the circuit pack once it receives translation updates. The port translation data includes: wink or immediate start trunk, dial tone or rotary dialing trunk, rotary dialing inter-digit timing, Network balance R/RC, and disconnect timing.

Table 10-200. TEST #36 Port Audit Update Test

Error Code	Test Result	Description/Recommendation
	ABORT	Could not allocate the necessary system resources to run this test. 1. Retry the command at 1-minute intervals a maximum of 5 times.
1006	ABORT	The port has been placed out of service, perhaps by craft busyout. Use the **display port PCSSpp** command to determine the trunk group/member number of the port. Use the **status trunk** command to determine the service state of the port. If the service state indicates that the port is out of service, then the port is unavailable for certain tests. You must wait until the port is in service and idle before retesting. 1. If the port status is in service and idle, then retry the command at 1-minute intervals for a maximum of 5 times.

Continued on next page

Table 10-200. TEST #36 Port Audit Update Test — *Continued*

Error Code	Test Result	Description/Recommendation
2100	ABORT	Could not allocate the necessary system resources to run the test.
	FAIL	Internal System Error. 1. Retry the command at 1-minute intervals a maximum of 5 times.
	PASS	This test passed. Translation information was successfully updated on the circuit pack. 1. If signaling troubles are reported (Error Types 1, 257, or 513 in Error Log table), verify translation information for this port. 2. Refer problem to the CO. If the trunk is busied out, the test does not run, but returns PASS. To verify that the trunk is in-service: 1. Enter **status-command** to verify that the trunk is in-service. If the trunk is in-service, no further action is necessary. If the trunk is out-of-service, continue to Step 2. 2. Enter **release-trunk** command to put trunk back into in-service. 3. Retry the test command.
0	NO BOARD	The test could not relate the internal ID to the port (no board). 1. Check to ensure that the board translations are correct. Translate the board, if necessary. 2. Issue the **busyout board** command. 3. Issue the **reset board** command. 4. Issue the **release busy board** command. 5. Issue the **test board** command. This should re-establish the linkage between the internal ID and the port.

DIG-BD (Digital Line Circuit Pack)

MO Name (in Alarm Log)	Alarm Level	Initial Command to Run[1]	Full Name of MO
DIG-BD	MIN	test board PCSS sh	Digital Line Circuit Pack
DIG-BD	WRN	test board PCSS sh	Digital Line Circuit Pack

1 Where P is the port network number (1 for PPN and 2 or 3 for EPN); C is the carrier designation (for example, A, B, C, D, or E); and SS is the address of the slot in the carrier where the circuit pack is located (for example, 01, 02, etc.).

Refer to XXX-BD (Common Port Circuit Pack) Maintenance documentation for circuit pack level errors. See also DIG-LINE (Digital Line) Maintenance documentation for related line information.

DIG-IP-STN (Digital IP Station)

MO Name (in Alarm Log)	Alarm Level	Initial Command to Run	Full Name of MO
DIG-IP-STN	WARNING	test station *extension*	Digital IP Station

The Softphone has some level of existing DCP maintenance in the form of audits, and updates. In addition, it also has error log entries and test to clear values.

In addition this MO covers a new Avaya Voice terminal that communicates to the switch via an IP LAN. This type of terminal, referred to as an IP Phone is made up of the 46XX line of terminals. This terminal emulates DCP signaling carried over TCP.

This station type is not attached to a port board. Insertion of the station is not driven by board insertion, rather it is driven by successful registration of the endpoint. It is maintained via a set of explicit TCP/IP ping requests and errors reported by the User Manger software, which terminates the H.323 signaling portion of each endpoint. The MO follows standard maintenance methodology and supports test, busyout, release and status commands.

Maintenance for Softphone includes Error Log Entries and Test to Clear Values. See table DIG-IP-STN Digital IP Station Error Log Entries.

Table 10-201. DIG-IP-STN Digital IP Station Error Log Entries

Error Type	Aux Data	Associated Test	Alarm Level	On/Off Board	Test to Clear Value
0	0	Any	Any		test station *extension*
1 (a)		Registration Status Inquiry (#1372)	WARNING	OFF	
18 (b)	0	Busyout port or station	WARNING	OFF	*release port (or) station*
257 (c)		Signaling Path PING Test (#1373)	WARNING	OFF	
(d)		Digital Terminal Lamp Update (#16)	WARNING	OFF	
(e)		Digital Terminal Audit Update (#17)	WARNING	OFF	
513 (f)	Any	Station Digital AUDIT Test (#17)	WARNING	OFF	test port or station
1281 (g)	Any	Station Digital AUDIT Test (#17)	WARNING	OFF	test port or station
1537 (h)	40968		WARNING	OFF	test port or station
2305 (i)	Any	None			
2817 (j)		Station Hyperactivity			

Notes:

a. **Error Type 1**: this error reports the registration status of the endpoint. If call processing SW claims the endpoint is registered and receives keep-alive handshakes from the endpoint, the test passes. If keep-alive handshaking has failed, the test fails. If the user has intentionally un-registered from Avaya DEFINITY Server, the station is now basically an AWOH station and is no longer being maintained; no tests run for this station.

b. **Error Type 18**: this error type is logged when the port/station is busied out by maintenance personal. Make sure the port/station is released from busy via the *release port/station* command (IP terminal only).

c. **Error Type 257**: this error tracks failures of the signaling path PING test. The test attempts to send a PING packet to the endpoint IP address, as reported during registration. The PING packet originates with the C-LAN board through which the endpoint is registered. If the PING response packet is received, the test passes. If the PING response packet times out, the test fails.

d. This is a refresh of the lamp states for all lamps on the Virtual DCP station. The update always passes, if it runs successfully. It can abort, but it never fails. This update is the same update used for existing DCP stations. It is test number 16.

e. This is a refresh of the ringer state on the Virtual DCP station and a query of the virtual station's switch-hook state. The audit always passes, if it runs successfully. It can abort, but it never fails. This runs a subset of the complete audit update that runs for standard DCP sets.

f. **Error Type 513**: this error type indicates that the terminal failed to respond to the ID Query request. This implies that there is something wrong with the terminal or the communication path. (IP terminal only).

g. **Error Type 1281**: this error type indicates that the terminal is reporting a bad state of health (IP terminal only).

h. **Error Type 1537**: this error type indicates that the link has gone down between the terminal and its gateway to the switch. This likely means that the terminal has unregistered (IP terminal only).

i. **Error Type 2305**: this error indicates that there was an unsolicited Link Reset even though switch software believed the terminal to be functional and in service. This error can be ignored if no user complaints are received (IP terminal only).

j. **Error Type 2817**: this error tracks failures of the port hyperactivity counter. If a port generates more than 50 uplink CCMS messages within 10 seconds, the port is taken out-of-service for 30 seconds. Even though the Softphone actually signals over a TCP/IP link, DCP CCMS messages received over the TCP link are counted as regular CCMS uplinks and can cause the station to marked as hyperactive.

System Technician-Demanded Tests: Descriptions and Error Codes

Always investigate tests in the order presented in the table below when inspecting errors in the system. By clearing error codes associated with the Signaling Path PING Test, for example, you can also clear errors generated from other tests in the testing sequence.

Order of Investigation	Short Test Sequence	Long Test Sequence	D/ND[1]
Registration Status Inquiry (#1372)	X	X	ND
Signaling Path PING Test (#1373)	X	X	ND
Digital Terminal Lamp Update Test (#16)	X	X	ND
Digital Terminal Audits Test (#17)		X	ND

1 D = Destructive; ND = Nondestructive

Registration Status Inquiry (#1372)

The Registration status inquiry reports the H.323 registration status of the endpoint. An endpoint must be registered and authenticated in order to receive service from the system.

Registration is initiated when the endpoint user attempts to login using the Avaya registration software application running on the endpoint PC. The user must provide a valid extension and security code. The registration messages are sent to the IP address of a C-LAN ethernet port.

A registered extension has a port number or ID that appears as SNNNNN, where N is a digit from 0-9 and S is an indication that the port is virtual and a station.

Table 10-202. TEST #1372 Registration Status Inquiry

Error Code	Test Result	Description/Recommendation
1,2,3	FAIL	The endpoint is not successfully registered. Verify that the user is entering: the correct extension and security code the C-LAN IP address Verify that the extension has been enabled for IP softphone operation. If many endpoints cannot register, investigate any errors of the C-LAN ethernet port. Examine the ethernet cabling from the endpoint PC to the ethernet hub.
	PASS	The endpoint is successfully registered and continues to respond to registration handshaking.

Signaling Path PING Test (#1373)

This test is nondestructive.

The test determines the local C-LAN through which the signaling originates and the endpoint's IP address. It then requests the local C-LAN to execute a PING on the endpoint's address. If the PING is successful, the test passes, if the PING is not successful, the test fails.

NOTE:
Multiple failures of this test can take the Digital IP Station out of service.

NOTE:
This test checks the circuitry involved in the data path of a peer-to-peer IP layer connection.

NOTE:
This nondestructive test runs due to in-line errors, during periodic and schedule maintenance, and on demand.

Table 10-203. TEST #1373 Signaling Path PING Test

Error Code	Test Result	Description/Recommendation
2100	ABORT	Could not locate the necessary system resources to run this test. Retry the command at 1-minute intervals, up to 5 times. Escalate if the problem persists.
2500	ABORT	Internal system error Retry the command at 1-minute intervals, up to 3 times. Escalate if the problem persists.
1003	FAIL	Ping to the destination failed. Retry the command at 1-minute intervals, up to 3 times. Investigate any C-LAN ethernet port errors.
1007	FAIL	The system could not PING the registered endpoint via the C-LAN. Verify that at least one destination reachable through this port. PING this destination (**ping ip-address *xxx.xxx.xxx.xxx***). If the PING to any destination is successful through this port, the link is up. If PING to all destinations fail, test the C-LAN port (**test port UUCSSpp short**) and follow repair procedures for Session Status Test (#1286) failures. If only this station cannot be pinged: Make sure the PC is up Make sure the PC has a network connection (ethernet or dialup) Check the ethernet cabling
	PASS	The system can successfully send IP packets to the registered endpoint from the C-LAN.

Digital Terminal Lamp Update (#16)

This test updates internal lamp states that can or cannot be shown on the actual PC graphical user interface. The lamp updates run only if the station is in-service. The status of the station is checked and the lamp updates are blocked from taking place if the station is not in the in-service state. This test does not affect the status of the Message Waiting lamp.

Table 10-204. TEST #16 DIG-LINE Station Lamp Updates Test

Error Code	Test Result	Description/Recommendation
	ABORT	Internal system error Retry the command at 1-minute intervals a maximum of 5 times.
1	ABORT	This port could have been busied out by system technician. Look in the Error Log for Error Type 18 (port busied out) for this port. If this error type is present, then release the port via the **release station <extension>** command and run the test again. Make sure that the terminal is connected. Retry the command at 1-minute intervals a maximum of 5 times.
3	ABORT	Station could be in ready-for-service or out-of-service state. Use **status station** command to verify state of station. Make sure the terminal is connected. Retry the command at 1-minute intervals a maximum of 5 times.
1000	ABORT	System resources required to run this test are not available. The port could be busy with a valid call. Use **display port UUCSSpp** to determine the station extension of the port. Use **status station** to determine the service state of the port. If the port is in use, wait until the port is idle before testing. If the port status is idle, then retry the command at 1-minute intervals a maximum of 5 times.
	FAIL	Internal system error Retry the command at 1-minute intervals a maximum of 5 times.
	PASS	The message to light all of the station lamps was sent successfully to the port.

Digital Terminal Audits Test (#17)

This is a series of tests that are classified as audits. The SPE sends messages to the softphone application or IP Phone to perform the following tests. These audits run only if the station is in-service.

- Switchhook Inquiry Test — This is an update of the SPE records according to the softphone switch hook state.
- Ringer Update Test — This updates the softphone ringer state according to the processor records.
- ID Request — A request is made to the station for its status. The terminal sends its configuration information and health information back. The information is checked and a PASS/ABORT result is provided. if the result is ABORT an error is logged in the hardware error log (IP Terminal only).

Table 10-205. TEST #17 Station (Digital) Audits Test

Error Code	Test Result	Description/Recommendation
1	ABORT	Switchhook audit timed out.
2	ABORT	ID request fails, health bit returned from voice terminal is bad (IP Terminal only). Make sure voice terminal is connected and repeat test. If test fails, replace voice terminal and repeat test.
4	ABORT	Internal system error Resolve any outstanding circuit pack maintenance problems. Retry the command at 1-minute intervals a maximum of 5 times.
5	ABORT	Ringer update aborted due to station being in ready-for-service or out-of-service state.
6	ABORT	This port could have been busied out by system technician. Look in the Error Log for Error Type 18 (port busied out) for this port. If this error is present, the release the port via **release station** Make sure that the terminal is connected. Retry the command at 1-minute intervals a maximum of 5 times.
1000	ABORT	System resources required for this test are not available.
2000	ABORT	Response to the test was not received in the allowable time period. Retry the command at 1-minute intervals a maximum of 5 times.
	PASS	Station Audits passed. If complaints persist, investigate by using other port tests, and by examining the station, wiring, and connections.

DIG-LINE (Digital Line)

MO Name (in Alarm Log)	Alarm Level	Initial Command to Run[1]	Full Name of MO
DIG-LINE	MINOR	test port PCSSpp l	Digital Line
DIG-LINE	WARNING	test port PCSSpp sh	Digital Line

1 Where P is the port network number (1 for PPN and 2 or 3 for EPN); C is the carrier designation (for example, A, B, C, D, or E); SS is the address of the slot in the carrier where the circuit pack is located (for example, 01, 02, etc.); and pp is the 2-digit port number (for example, 01).

DIG-LINE maintenance monitors and tests ports on Digital Line circuit packs and the hardware connected to those ports for lines administered as a digital station. These include stations with just a digital voice terminal and stations with a digital voice terminal and a linked data module. Stand-alone data modules, and data adaptors in stand-alone mode, are covered by the PDMODULE and TDMODULE maintenance objects. Circuit pack-level maintenance is covered by DIG-BD whose strategy is described in the XXX-BD section of this chapter. The following circuit packs support digital lines:

Table 10-206. Digital Line Circuit Packs

Code	Ports	Type	Companding	Endpoints
TN413	8	4-wire DCP	A-law	7400 series digital voice terminals, attendant consoles, 510D personal terminals, MT515 BCTs, DCP data modules
TN754	8	4-wire DCP	mu-law	
TN754B	8	4-wire DCP	A-law/mu-law	
TN2181	16	2-wire IDCP	A-law/mu-law	
TN2224	24	2-wire IDCP	A-law/mu-law	
TN2136	8	2-Wire IDCP	A-law/mu-law	Data Adaptors (DA), Italtel Digital Telephone Models 1 and 2 (IDT1/2).
TN2177	16	2-wire IDCP	A-law/mu-law	
TN2181	16	2-wire IDCP	A-law/mu-law	
TN2224	24	2-wire IDCP	A-law/mu-law	

Each digital line port supports two 64 kbps information channels (primary and secondary) and one 8kbps signaling channel. Digital voice terminals always use the primary information channel. Thus only one voice terminal can be connected to each port. The secondary information channel can be used to connect a data terminal via a Digital Terminal Data Module (DTDM) or a Data Adaptor (DA). All other devices currently supported by Digital Line circuit packs communicate on the primary information channel. Figure 10-26 shows examples of digital line connectivity.

Only the TN754B or TN2136 should be used in out-of-building applications.

It should be noted that TN2181 and TN2224 supports both modes as shown in Figure 10-25 and Figure 10-26.

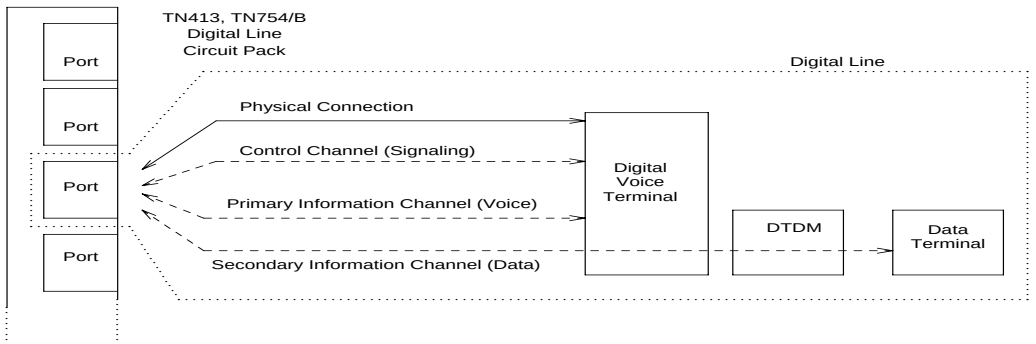

Figure 10-25. Digital Line Connectivity

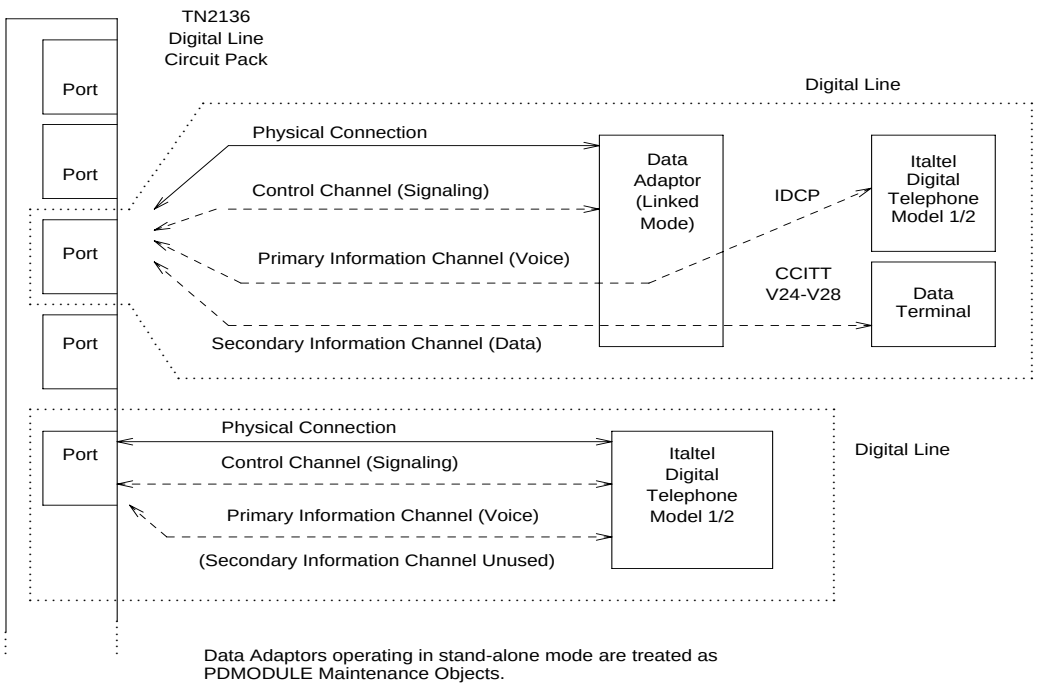

Figure 10-26. Digital Line Connectivity

Only 2-wire Italtel Digital Telephone Models 1 and 2 (IDT1/2) or DAs can be directly connected to a TN2136. Avaya DCP (4-wire) digital voice terminals and data modules can be connected to these circuit packs via Italtel's 2/4-wire adapter. DAs can operate in either of two modes which are covered by different maintenance objects:

DA Mode	Administered as:	Endpoint	Maintenance Object
Stand-alone	PDM	Data endpoint only	PDMODULE
Linked	DTDM	IDT1/2 and optional data terminal	DIG-LINE

Digital Line maintenance interacts with Digital Line circuit pack (DIG-BD) maintenance, and results of DIG-LINE testing can be affected by the health of the Digital Line circuit pack. Keep this in mind when investigating reported Digital Line problems.

There are instances where the service state of a station is mentioned. It is helpful to understand what is meant by the different service states that may exist. The different service states which apply to digital line station are explained as follows.

Out-of-Service	The port, and thus the station, have been removed from service. Busyouts put the port in the out-of-service state.
Ready-for-Service	The port on the circuit pack has been put into service, but the voice terminal has not yet established signaling communications with the port.
In-Service	The voice terminal has established signaling communications with the port, and the system is ready to process calls to and from that station. A terminal in the ready-for-service state will progress to the in-service state if it is functioning normally. It can also be forced into the in-service state by going off-hook.

Downloading of Terminal Parameters

Programmable Terminals

The following information is presented as background information to help understand how maintenance software interacts with terminal parameter downloading.

Terminal Types:

The following terminals can be downloaded for Definity G3V3 and later versions:

a. 84xx multibutton digital voice terminals (8403D01A, 8410B, 8410D02A, 8434D01A) with optional expansion module.

b. 603A1 and 603D1 Callmaster terminals for telemarketing applications.

c. 302B1 attendant console.

Circuit Packs:

1. 8400x, 302B1 Terminals
   a. TN754 (4-wire, Mu-law)

      Minimum usable vintage for 8410D and 8434D terminals - V11

   b. TN413 (4-wire, A-law)
   c. TN754B (4-wire, A-law/Mu-law selectable)
   d. TN2177 (2-wire, 16-port, A-law/Mu-law selectable)
   e. TN2181 (2-wire, 16-port, A-law/Mu-law selectable)
   f. TN2224 (2-wire, 24-port, A-law/mu-law selectable)
2. 603A1/D1 Terminals
   a. TN754 (4-wire, Mu-law),
   b. TN413 (4-wire, A-law)
   c. TN754B (4-wire, A-law/Mu-law selectable)

Downloadable Terminal Parameters

The following parameters are downloaded to programmable terminals:

Table 10-207. Downloadable Parameters

Parameter	Scope	Terminal
International Flags (A-law/Mu-law, Display Mode, DLI Voltage level)	System level	84xx, 603x, 302B1
Primary Levels (Transmission & Sidetone)	System level	84xx, 603x, 302B1
Adjunct Levels (Transmission & Sidetone)	System level	84xx
Handset Expander Option	System level	84xx
Administrable Options (Speakerphone & Mute Button)	Per-terminal	84xx
Administrable Softkeys	Per-terminal, System level	8410D, 8434D

Nonvolatile Memory

Nonvolatile memory is used to store downloadable parameters in programmable terminals. Therefore, once the terminal has been downloaded, it is not be necessary to download it again, even if power is removed from the terminal.

If the nonvolatile memory fails with power still present, the terminal will revert to its default factory settings except for its A-law/Mu-law companding settings which are stored in RAM. If power is removed after the nonvolatile memory fails, the terminal will revert to its factory default settings.

Mu-law companding is assigned as a default setting at the factory, so, for domestic use, a programmable terminal can place calls even though it has not been downloaded from the PBX.

Download Actions

There are several different scenarios that will cause a terminal to be downloaded. As described below, these can occur as part of background maintenance activity or on demand from the System Access Terminal or from a station.

For the background actions described below, the terminal will be downloaded automatically if a download retry flag for the terminal is set in software. This flag is set at the time translation is loaded at boot time, when translation which affects the parameters of a terminal is changed as part of system administration actions, and when a port is inserted in software as a result of board insertion or translation change.

Automatic Download Actions

1. System Reboot/Restart

   A global download action is started when periodic maintenance tests start after a system reboot/restart regardless of whether the parameters have been downloaded previously.

2. Periodic Tests

   If the download flag is still set when periodic tests are run on a terminal, a download action will occur. This operation is required in case a terminal could not be downloaded previously because it was off-hook at the time the system first booted or because the terminal was off-hook at the time translation associated with downloadable parameters was changed.

   Note that it may take more than an hour for periodic tests to reach the terminal that needs to be downloaded.

3. Terminal Administration

   A downloadable terminal is automatically downloaded when translation changes associated with downloadable parameters are made as part of system administration. As shown in Table 10-128, these changes can be for a specified terminal or may be system-wide. If the change is for system-level parameter, a background global update request is made to download all programmable terminals.

   This global update may take more than an hour for a system with several thousand programmable terminals.

4. Port Insertion

   Whenever maintenance software initiates a request to place a port into service, a terminal download action is started on that terminal if that terminal is programmable. This port insertion action occurs under the following circumstances:

   a. A digital line circuit pack that is physically inserted into the system has ports currently administered for programmable terminals.

      If more than 20 port insertion requests are received within a few seconds, a global download request is started up as a background task. This action updates all programmable terminals instead of just those being inserted. This is done to avoid system overload for situations where there is massive board insertion. This could occur when connectivity to an EPN is reestablished after that EPN was down.

   b. Add a station to the system with **add station** or **change station**.

   c. A TTI port is activated.

5. Audits

   As part of periodic maintenance, the hardware status audit test queries programmable terminals to determine which levels and/or options are being used. If the reported values are not equal to the administered values, the system will initiate a terminal download action. This audit does NOT check the parameters used for softkeys.

6. Activation of TTI

   A terminal is downloaded automatically when it is activated using the Terminal Translation Initialization feature. Therefore, no special user actions are required for TTI.

   NOTE:
   Plugging the station cord into a terminal does not automatically cause the terminal to be downloaded. If this terminal has factory defaults or if the terminal has been previously downloaded with parameters different than those desired, use one of the demand download actions described below to download the terminal.

Demand Download Actions

1. Busyout/Release Command

   A maintenance demand busyout/release request for a station will cause the terminal to be downloaded regardless of its previous download status.

2. Feature Access Code

   A Refresh Terminal Parameters Feature Access Code can be used to request a terminal download action. When this code is followed by a “#”, the programmable parameters for the current terminal are downloaded when the terminal goes on hook. When this code is followed by an extension, the programmable parameters for the specified station are downloaded.

   This Refresh Terminal Parameters Feature Access Code is assigned on the second page of the “feature-access-codes” screen.

   A confirmation is returned if the download request is accepted. A busy tone is returned if the request is made from a different station when the target station is off-hook.

   The first three green call appearance LEDs on the 84xx 603x terminal will be turned on for three seconds if the station was successfully downloaded as a result of an entry of a Refresh Terminal Parameters Facility Access Code. This is not true for the 302B1 terminal.

   There is no visible display on a station for the other background or demand download actions. As described below, the “status station” and “status attendant” screens can be used to check the download status of a specified terminal.

Status of Parameter Downloads

The “status station” and “status attendant” screens display the current download status of individual 84xx, 603, and 301B1 terminals in the Download Status field. The possible download states are:

Table 10-208. Terminal Download Status

Status	Terminal Down Load State
Complete	Terminal successfully downloaded sometime in the past.
Pending	System waiting to download the terminal. This may require the execution of a background periodic test which could take more than an hour. A demand download as described above may also be used to initiate an immediate download.
Not Applicable	Not a programmable terminal.

Possible reasons for terminal being not downloaded include:

— Terminal is off-hook.

— Terminal detected a bad checksum.

— Terminal detected a bad or missing EEPROM (refer to hardware error log).

— Terminal is busy programming data from a previous PROGRAM message.

— Terminal is in the Programming Disabled state.

— Terminal is in the Local Program Options Mode.

— Terminal is disconnected or out of service (use **status station** command).

Hardware Error Log Entries and Test to Clear Values

Table 10-209. DIG-LINE Error Log Entries

Error Type	Aux Data	Associated Test	Alarm Level	On/Off Board	Test to Clear Value
0[1]	0	Any	Any	Any	test port PCSSpp sh r 1
1 (a)	40987	None	WARNING	OFF	
1 (b)	1 to 20	None	WARNING	OFF	
18 (c)	0	busyout port PCSSpp	WARNING	OFF	rel port PCSSpp
130 (d)		None	WARNING	ON	test port PCSSpp sh
257 (e)	40971	None			
513	0	Station (Digital) Audits Test (#17)	WARNING(o)	OFF	test port PCSSpp sh r 6
767 (f)	40964	None	WARNING	OFF	
769 (g)	40963 40988	None	WARNING	OFF	
1026(o)		NONE	WARNING	OFF	
1281	Any	Station (Digital) Audits Test (#17)	WARNING	OFF	test port PCSSpp sh r 4
1537 (h)	40968	None	WARNING	OFF	
1793		Voice & Ctrl. Local Loop Test (#13)	MINOR/ WARNING[2]	ON	test port PCSSpp l r 3
2049		NPE Crosstalk Test (#9)	MINOR/ WARNING[3]	ON	test port PCSSpp l r 3
2304 (n)		None			
2305 (i)	32770	None			
2305 (h)	40967	None			

Continued on next page

Table 10-209. DIG-LINE Error Log Entries — *Continued*

Error Type	Aux Data	Associated Test	Alarm Level	On/Off Board	Test to Clear Value
2817(j)	Any	None		OFF	
3840 (k)	40965	None			
3840 (l)	40989	None			
3841 (m)	41029	None			

1 Run the Short Test Sequence first. If all tests pass, run the Long Test Sequence. Refer to the appropriate test description and follow the recommended procedures.

2 Major alarms on this MO may be downgraded to Warning alarms based on the value used in the set options command.

3 Major alarms on this MO may be downgraded to Warning alarms based on the value used in the set options command.

Notes:

a. Could experience a noisy port or link. This is an off-board problem detected by the port circuit. Check for defective wiring, a defective voice terminal, or move voice terminal closer to the switch (in terms of feet of wire from the jack to the switch). If the problem still exists, replace the circuit pack. Once the problem has been resolved, the alarm will be retired after a predetermined amount of time.

b. This Error Type and Aux Data will occur when at least 15 off-board problems have been detected with the link to the terminal. When an error with the link is detected, an on-board counter is incremented.

   The user could experience a noisy port or link. This is an off-board problem detected by the port circuit. Check for defective wiring, a defective voice terminal, or move voice terminal closer to the switch (in terms of feet of wire from the jack to the switch). If the problem still exists, replace the circuit pack. Once the problem has been resolved, the alarm will be retired after a predetermined amount of time.

c. This error type is logged when the port in question is busied out by maintenance personnel. Make sure port is released from busyout via the **release port PCSSpp** command.

d. This error type indicates that the circuit pack has been removed or has been insane for more than 21 minutes. To clear the error, reinsert or replace the circuit pack.

e. Problems transmitting to the voice terminal. This problem can be caused by defective wiring. Defective wiring can cause varying degrees of problems on different types of sets. Sets such as the 7410 appear to be more susceptible to wiring problems than other sets. This is usually an on-board problem and can be ignored if no user complaints are received.

f. This is an in-line event that produces this error type when a favorable response is received from running the Digital Line Electronic Power Feed Test (#11). No craft action is necessary. This alarm will be resolved with the passing of time.

g. With Aux Data 40963, this error type is a result of an unfavorable response to the Electronic Power Feed/ Positive Temperature Coefficient Test (#11). With Aux Data 40988, this error type indicates that the EPF/PTC circuit has been turned off due to an overcurrent condition.

   For TN754 vintage 13 or earlier and TN413, the EPF circuit senses an overcurrent condition at the voice terminal. Check for a short in the wiring, a damaged jack, an incorrect type of voice terminal, or a defective voice terminal.

   For TN754 vintage 14 or later, TN754B and TN2136, the PTC will open if there is a short on the power line for 1/2 second or longer. The voice terminal is probably not operating properly. Unplug the voice terminal for 30 seconds and then plug it back in. If the voice terminal still does not operate, then check for a short in the wiring, a damaged jack, an incorrect type of voice terminal, or a defective voice terminal.

   Once the problem has been resolved, it may take up to 1 hour for the alarm to clear due to “leaky bucket” strategy. If the problem cannot be resolved by one of the steps above, then replace the circuit pack.

h. An in-line maintenance error has generated an off-board warning due to some problem with the link to the voice terminal. This can be ignored if no user complaints are received. Otherwise, make sure the voice terminal is connected, check for defective wiring, check for a defective voice terminal, and move voice terminal to a jack that is closer to the switch (in terms of feet of wiring between the jack and the switch). If the problem still exists, replace the circuit pack. Once the problem has been resolved, the alarm will be retired after a predetermined amount of time.

i. This indicates that the station went off-hook while it was in the ready-for-service state. Use the **status station** command to determine the state of the station. The off-hook should have moved the station to ready-for-service. No craft action is necessary.

j. Port Level Hyperactivity—Fifty or more CCMS uplilnk messages were received from the port within ten seconds. The user is taken out of service for a short interval of time (default 30 seconds).

k. No terminal is connected to the Digital Line board. No maintenance action is required.

l. An uplink message has been logged indicating that the Electric Power Feed (EPF) is on with no load on it. No action is necessary.

m. The circuit pack's message buffer is full. This may be caused by having many display phones with heavy traffic connected to the circuit pack. No action is necessary.

n. Internal system error. No action is necessary.

o. There is a problem with the voice terminal EEPROM. When the voice terminal is repaired the alarm will be resolved with the passing of time.

System Technician-Demanded Tests: Descriptions and Error Codes

Always investigate tests in the order presented in the table below when inspecting errors in the system. By clearing error codes associated with the *Voice and Control Channel Local Loop Around Test,* for example, you may also clear errors generated from other tests in the testing sequence.

Table 10-210. System Technician-Demanded Tests: DIG-LINE

Order of Investigation	Short Test Sequence	Long Test Sequence	D/ND[1]
Digital Terminal Remote Loop Around Test (#1201)		X	D
Voice and Control Channel Local Loop Around Test (#13)		X	ND
Digital Line NPE Crosstalk Test (#9)		X	ND
Digital Line Electronic Power Feed Test (#11)		X	ND
DIG-LINE Station Lamp Updates Test (#16)	X	X	ND
Station (Digital) Audits Test (#17)	X	X	ND

1 D = Destructive, ND = Non-destructive

Digital Terminal Remote Loop Around Test (#1201)

This test checks the integrity of the connection between the SPE and the attached Digital Terminal and the ability of the terminal and the associated port to send and receive data.

A request is presented to the terminal to go into loop back mode. Then data is sent to the terminal and when received back, checked for consistency. This test is run as a part of the craft command "test long" procedure. It is not included in any error recovery strategy and generates no Error Log entries or alarms. To begin the test, Maintenance will ask Call Processing to make the associated end point and port "Maintenance Busy". This test will succeed if the endpoint is "idle". If the reserve request fails then the test will abort. If the request succeeds then the SPE sends a message to loop around both information channels for the digital terminal. First the primary information (voice, Information Channel 1 or I1) channel loop back test is run. The test is performed by sending a digital count from the

Tone/Clock circuit pack on the primary information channel time slot and receiving the same digital count with a general purpose tone detector.

If the primary information channel test is successful, the loop around test for the secondary information (data, Information Channel 2 or I2) channel is then performed. This test is the same as the primary information channel loop around test and is performed only if a DTDM is administered, which is also the case for a linked DA.

Only one value (Pass. Fail, or Abort) is generated as a result of the two tests run. If any test fails aborts, the sequence is stopped. Upon completion of this test the associated endpoint and port are moved back into the previous service state.

Table 10-211. TEST #1201 Digital Terminal Remote Loop Around Test

Error Code	Test Result	Description/Recommendation
	ABORT	Internal System Error 1. Retry the command at 1-minute intervals a maximum of 5 times.
1000	ABORT	System resources required to run this test are not available. The port may be busy with a valid call. Use the **display port PCSSpp** command to determine the station extension or attendant number of the port. Use **status station** or **status attendant** to determine the service state of the port. If the service state indicates that the port is in use, then the port is unavailable for certain test. (See Chapter 10, “Maintenance Commands and Trouble-Clearing Aids” for a full description of all possible states.) You must wait until the port is idle before re-testing. Attendants are always in use (off-hook) if the handset is plugged in and the port is not busied out. 1. If the port status is idle, then retry the command at 1-minute intervals a maximum of 5 times.
1001	ABORT	System resources required to run this test are not available. 1. If the port status is idle, then retry the command at 1-minute intervals a maximum of 5 times.
1002	ABORT	The system could not allocate time slots for the test. The system may be under heavy traffic conditions or it may have time slots out-of-service due to TDM-BUS errors. Refer to TDM-BUS (TDM-Bus) Maintenance to diagnose any active TDM-BUS errors. 1. If the system has no TDM-BUS errors and is not handling heavy traffic, repeat test at 1-minute intervals a maximum of 5 times.

Continued on next page

Table 10-211. TEST #1201 Digital Terminal Remote Loop Around Test — *Continued*

Error Code	Test Result	Description/Recommendation
1003	ABORT	The system could not allocate a tone receiver for the test. The system may be oversized for the number of Tone Detectors present or some Tone Detectors may be out of service. 1. Look for TTR-LEV errors in the Error Log. If present refer to TTR-LEV (TTR-Level) Maintenance documentation. 2. Look for TONE-PT errors in the Error Log. If present, refer to TONE-PT (Tone Generator) Maintenance documentation. 3. If neither condition exist, retry the command at 1-minute intervals a maximum of 5 times.
1004	ABORT	The port was seized by a valid call during the test. The test has been aborted. Use the **display port PCSSpp** command to determine the station extension or attendant number of the port. Use **status station** or **status attendant** to determine the service state of the port. If the service state indicates that the port is in use, then the port is unavailable for certain test. You must wait until the port is idle before resetting. Attendants are always in use (off-hook) if the handset is plugged in and the port is not busied out. 1. Retry the command at 1-minute intervals a maximum of 5 times. 2. If the test continues to abort and the port is not in use, escalate the problem.
1005	ABORT	The installed circuit pack does not support this operation.
2000	ABORT	Response to the test request was not received within the allowable time period. 1. Retry the command at 1-minute intervals a maximum of 5 times.
2100	ABORT	System resources required to run this test are not available. 1. Make sure terminal is connected and repeat test. 2. If test fails replace terminal and repeat test. 3. Retry the command at 1-minute intervals a maximum of 5 times.

Continued on next page

Table 10-211. TEST #1201 Digital Terminal Remote Loop Around Test — *Continued*

Error Code	Test Result	Description/Recommendation
14	FAIL	The primary channel (voice, Information Channel 1 or I1) is not operating properly. User impact may range from noticing nothing to not being able to use the port. Check the results of Voice and Control Channel Local Loop Test (#13). If that test fails, suspect the Digital Line circuit pack. If that test passes then replace the terminal. If both tests fail and component replacement does not change the results, then: 1. Run circuit pack tests to check the tone generator circuit pack and the Tone Detector circuit pack using the **test board PCSSpp** command. 2. Resolve any problems that are detected on the Tone Generator circuit pack or Tone Detector circuit pack. 3. If the Tone Generator and Tone Detector circuit pack are functioning properly, and the tests still fail, escalate the problem.
1015	ABORT	The system will not allow this test to be run because the station is/has not been busied out. Busy out the station with the **busyout station** command.

Continued on next page

Table 10-211. TEST #1201 Digital Terminal Remote Loop Around Test — *Continued*

Error Code	Test Result	Description/Recommendation
16	FAIL	The secondary channel (data Information Channel 2 or I2 is not operating properly. User impact may range from noticing nothing to not being able to use this terminal. Check the results of Voice and Control Channel Local Loop Test (#13). If that test fails, suspect the Digital Line circuit pack. If that test passes then replace the terminal. If both test fail, and component replacement does not change the results, then: 1. Run circuit pack tests to check the tone generator circuit pack and the Tone Detector circuit pack using the **test board PCSSpp** command. 2. Resolve any problems that are detected on the Tone Generator circuit pack or Tone Detector circuit pack. 3. If the Tone Generator and Tone Detector circuit pack are functioning properly, and the tests still fail, escalate the problem.
	PASS	Voice and Control Channel Local Loop test passed. All channels are transmitting properly. 1. To be sure that this is not an intermittent problem, repeat this test up to a maximum of ten times to make sure it continues to pass. 2. If complaints persist (noisy connections for voice. corrupted data transfer for data), examine the station, connections, and wiring.

Digital Line NPE Crosstalk Test (#9)

One or more Network Processing Elements (NPEs) reside on each circuit pack with a TDM Bus interface. The NPE controls port connectivity and gain, and provides conferencing functions on a per-port basis. The NPE Crosstalk Test verifies that this port's NPE channel talks on the selected time slot and never crosses over to time slots reserved for other connections. If the NPE is not working correctly, one-way and noisy connections may be observed. This test is part of a port's Long Test Sequence and takes about 20 to 30 seconds to complete. Crosstalk testing is performed on both the primary information channel (voice) and the secondary information channel (data) associated with each digital station port. If this test fails on either channel, the station and the DTDM are taken out-of-service.

Table 10-212. TEST #9 Digital Line NPE Crosstalk Test

Error Code	Test Result	Description/Recommendation
1	ABORT	During testing of the primary information channel, system resources may not have been available. Also, the port may have been busy during the test. 1. Check the port status. Use the **display port PCSSpp** command to determine the station extension of the port. Use the **status station** command to determine the service state of the port. If the service state indicates that the port is in use, then the port is unavailable for this test. You will have to wait until the port is idle. 2. If the port status is idle, then retry the command a 1-minute intervals a maximum of 5 times.
2	ABORT	During testing of DTDM, system resources may not have been available. Also, the port may have been busy during the test. 1. Check if port is being used. If possible, disconnect by toggling disconnect button on DTDM. Retry command after 1 minute. **WARNING:** *This action will drop the call in progress.* 2. If the test continues to abort after 5 attempts, escalate the problem.
1000	ABORT	System resources required to run this test are not available. The port may be busy with a valid call. Use **display port PCSSpp** to determine the station extension or attendant number of the port. Use **status station** or **status attendant** to determine the service state of the port. If the service state indicates that the port is in use, then the port is unavailable for certain tests. You must wait until the port is idle before retesting. Attendants are always in use (off-hook) if the handset is plugged in and the port is not busied out. 1. If the port status is idle, then retry the command at 1-minute intervals a maximum of 5 times.
1001	ABORT	System resources required to run this test are not available. 1. Retry the command at 1-minute intervals a maximum of 5 times.

Continued on next page

Table 10-212. TEST #9 Digital Line NPE Crosstalk Test — *Continued*

Error Code	Test Result	Description/Recommendation
1002	ABORT	The system could not allocate time slots for the test. The system may be under heavy traffic conditions or it may have time slots out-of-service due to TDM-BUS errors. Refer to TDM-BUS (TDM Bus) Maintenance to diagnose any active TDM-BUS errors. 1. If system has no TDM-BUS errors and is not handling heavy traffic, repeat test at 1-minute intervals a maximum of 5 times.
1003	ABORT	The system could not allocate a tone receiver for the test. The system may be oversized for the number of Tone Detectors present or some Tone Detectors may be out-of-service. 1. Look for TTR-LEV errors in the Error Log. If present, refer to TTR (TTR Level) Maintenance documentation. 2. Look for TONE-PT errors in the Error Log. If present, refer to TONE-PT (Tone Generator) Maintenance documentation. 3. If neither condition exists, retry the command at 1-minute intervals a maximum of 5 times.
1004	ABORT	The port was seized by a valid call during the test. The test has been aborted. Use **display port PCSSpp** to determine the station extension or attendant number of the port. Use **status station** or **status attendant** to determine the service state of the port. If the service state indicates that the port is in use, then the port is unavailable for certain tests. You must wait until the port is idle before retesting. Attendants are always in use (off-hook) if the handset is plugged in and the port is not busied out.

Continued on next page

Table 10-212. TEST #9 Digital Line NPE Crosstalk Test — *Continued*

Error Code	Test Result	Description/Recommendation
1020	ABORT	Test disabled via background testing. Use **status station** command to determine when station is available for testing.
2000	ABORT	Response to the test request was not received within the allowable time period. 1. Retry the command at 1-minute intervals a maximum of 5 times.
1 2	FAIL	The Network Processing Element (NPE) of the tested port was found to be transmitting in error. This will cause noisy and unreliable connections. Failure code 1 indicates that the Crosstalk test failed on the primary channel. Failure code 2 indicates that the Crosstalk test failed on the secondary channel. 1. Replace circuit pack.
	PASS	The port is correctly using its allocated time slots. 1. To be sure that this is not an intermittent problem, repeat this test up to a maximum of 10 times to make sure it continues to pass. 2. If complaints persist, examine the station, connections, and wiring.

Digital Line Electronic Power Feed/Positive Temperature Coefficient/PPF Test(#11)

For TN413, and TN754 vintage 13 or earlier, this is an Electronic Power Feed (EPF) restore test. In this test, the processor requests that the EPF be turned on for a given port, and an attempt is made to turn on the power supply to the station. If no current is drawn, the station is probably not connected. If an overcurrent condition is sensed, there may be a short in the loop. A message is returned reporting that either the EPF was successfully turned on, or that an overcurrent condition was sensed. This test is repeated again 5 seconds later.

For TN754 vintage 14 or later, TN754B and TN2136 this is a Positive Temperature Coefficient (PTC) restore test. In this test, the processor requests that the PTC be turned on for a given port, and an attempt is made to turn on the power supply to the station. If an overcurrent condition is sensed, there is probably a short on the power line that causing the PTC to open and disconnect the voice terminal. Since the PTC does not have self-restore capability, the voice terminal must be manually unplugged for 30 seconds and then plugged back in to restore the PTC. A message is returned reporting that either the PTC was successfully turned on successfully with no problem or an overcurrent condition was sensed. This test is repeated again 5 seconds later.

TN2181 and TN2224 boards carry a Protected Power Feed (PPF) relays, one for each port. Therefore this will be a Protected Power Feed restore test. The test procedure and its response is same as that of EPF. One of differences between EFP and PPF is that, if the port goes into a overcurrent state, PPF does not report this change of state because it is a transient state which will not last more than 50ms. If the over current persists the power will be shut off automatically and an EPF_off_overcurrent message is sent uplink.

Table 10-213. TEST #11 Digital Line Electronic Power Feed Test

Error Code	Test Result	Description/Recommendation
	ABORT	Internal System Error 1. Retry the command at 1-minute intervals a maximum of 5 times.
1000	ABORT	System resources required to run this test are not available. The port may be busy with a valid call. Use **display port PCSSpp** to determine the station extension or attendant number of the port. Use **status station** or **status attendant** to determine the service state of the port. If the service state indicates that the port is in use, then the port is unavailable for certain tests. You must wait until the port is idle before retesting. Attendants are always in use (off-hook) if the handset is plugged in and the port is not busied out. 1. If the port status is idle, then retry the command at 1-minute intervals a maximum of 5 times.
	FAIL	Internal System Error 1. Retry the command at 1-minute intervals a maximum of 5 times.
	PASS	Electronic Power Feed Test passed. The message to turn on the power to the station was successfully sent to the port. 1. Although this test will never actually return a FAIL result except for the Internal System Error (naught/FAIL) described above, it will log an error indicating the real results of the test. Check the Error Log for any entries with Error Types 767 or 769 after the test completes. 2. If Error Type 767 appears in the Error Log, this should indicate that the test sensed no problems with the power to the station. To verify that the station is powered up correctly, run a self-test on the station, if available, and check that all the feature buttons are operating. 3. If Error Type 769 appears in the Error Log, this indicates some problem with the power to the station. Check for a short in the wiring, a damaged jack, a defective voice terminal, or an incorrect type of terminal.

Voice and Control Channel Local Loop Test (#13)

These tests check the information and control channels between the Switch Processing Element (SPE) and the Digital Line port circuit. The SPE sends a message to loop around both the information and control channels for the port. First, the primary information (voice) channel loop back test is run. The test is performed by sending a digital count from the Tone-Clock circuit pack on the primary information channel time slot and receiving the same digital count with a general purpose Tone Detector.

While the primary information channel is still looped around, the Control Channel Loop Around Test is performed. This test consists of sending four different transparent patterns to the on-board microprocessor, receiving them back, and comparing them.

The Loop Around Test for the secondary information (data) channel is then performed. This test is the same as the primary information channel loop around test and is performed only if a DTDM is administered.

A Conference Test is done next for the primary information channel. This test is the same as Conference Test #6.

Only one value (Pass, Fail, or Abort) is generated as a result of four tests run. If any test fails or aborts, the sequence is stopped.

Table 10-214. TEST #13 Voice and Control Channel Local Loop Test

Error Code	Test Result	Description/Recommendation
	ABORT	Internal System Error 1. Retry the command at 1-minute intervals a maximum of 5 times.
1000	ABORT	System resources required to run this test are not available. The port may be busy with a valid call. Use **display port PCSSpp** to determine the station extension or attendant number of the port. Use **status station** or **status attendant** to determine the service state of the port. If the service state indicates that the port is in use, then the port is unavailable for certain tests. You must wait until the port is idle before retesting. Attendants are always in use (off-hook) if the handset is plugged in and the port is not busied out. 1. If the port status is idle, then retry the command at 1-minute intervals a maximum of 5 times.
1001	ABORT	System resources required to run this test are not available. 1. Retry the command at 1-minute intervals a maximum of 5 times.

Continued on next page

Table 10-214. TEST #13 Voice and Control Channel Local Loop Test — *Continued*

Error Code	Test Result	Description/Recommendation
1002	ABORT	The system could not allocate time slots for the test. The system may be under heavy traffic conditions or it may have time slots out-of-service due to TDM-BUS errors. Refer to TDM-BUS (TDM Bus) Maintenance to diagnose any active TDM-BUS errors. 1. If system has no TDM-BUS errors and is not handling heavy traffic, repeat test at 1-minute intervals a maximum of 5 times.
1003	ABORT	The system could not allocate a tone receiver for the test. The system may be oversized for the number of Tone Detectors present or some Tone Detectors may be out-of-service. 1. Look for TTR-LEV errors in the Error Log. If present, refer to TTR-LEV (TTR Level) Maintenance documentation. 2. Look for TONE-PT errors in the Error Log. If present, refer to TONE-PT (Tone Generator) Maintenance documentation. 3. If neither condition exists, retry the command at 1-minute intervals a maximum of 5 times.
1004	ABORT	The port was seized by a valid call during the test. The test has been aborted. Use **display port PCSSpp** to determine the station extension or attendant number of the port. Use **status station** or **status attendant** to determine the service state of the port. If the service state indicates that the port is in use, then the port is unavailable for certain tests. You must wait until the port is idle before retesting. Attendants are always in use (off-hook) if the handset is plugged in and the port is not busied out. 1. Retry the command at 1-minute intervals a maximum of 5 times. 2. If the test continues to abort and the port is not in use, escalate the problem.
2000	ABORT	Response to the test request was not received within the allowable time period.
2100	ABORT	Could not allocate the necessary system resources to run this test. 1. Rerun the test at 1-minute intervals a maximum of 5 times.

Continued on next page

Table 10-214. TEST #13 Voice and Control Channel Local Loop Test — *Continued*

Error Code	Test Result	Description/Recommendation
7	FAIL	Conference Test failed on primary channel. In some cases, users may not notice disruption in service. In extreme cases, conferencing feature may not work at all.
14	FAIL	The primary voice channel is not transmitting properly. User impact may range from noticing nothing to not being able to use this port.
15	FAIL	The control channel between the processor and digital circuit pack is not transmitting properly. User impact may range from noticing nothing to not being able to use the port. Could also be disruptive to other users.
16	FAIL	The secondary voice channel is not transmitting properly. User impact may range from noticing nothing to not being able to use this port. 1. Run circuit pack tests to check the Tone Generator circuit pack and the Tone Detector circuit pack using the **test board PCSSpp** command. 2. Resolve any problems that are detected on the Tone Generator circuit pack or Tone Detector circuit pack. 3. If the Tone Generator and Tone Detector circuit packs are functioning properly, and the test still fails, replace the Digital Line circuit pack.
	PASS	Voice and Control Channel Local Loop test passed. All channels are transmitting properly. 1. To be sure that this is not an intermittent problem, repeat this test up to a maximum of 10 times to make sure it continues to pass. 2. If complaints persist (noisy connections for voice, corrupted data for data transfer), examine the station, connections, and wiring.

DIG-LINE Station Lamp Updates Test (#16)

This test lights all lamps on the terminal as specified. The lamp updates will run only if the station is in-service. The status of the station is checked and the lamp updates are blocked from taking place if the station is not in the in-service state. This test does not affect the status of the Message Waiting lamp.

Table 10-215. TEST #16 DIG-LINE Station Lamp Updates Test

Error Code	Test Result	Description/Recommendation
	ABORT	Internal System Error 1. Retry the command at 1-minute intervals a maximum of 5 times.
1	ABORT	This port may have been busied out by system technician. 1. Look in the Error Log for Error Type 18 (port busied out) for this port. If this error type is present, then release the port via the **release station <extension>** command and run the test again. 2. Make sure that the terminal is connected. 3. Retry the command at 1-minute intervals a maximum of 5 times.
3	ABORT	Station may be in ready-for-service or out-of-service state. 1. Use **status station** command to verify state of station. 2. Make sure the terminal is connected. 3. Retry the command at 1-minute intervals a maximum of 5 times.
1000	ABORT	System resources required to run this test are not available. The port may be busy with a valid call. Use **display port PCSSpp** to determine the station extension or attendant number of the port. Use **status station** or **status attendant** to determine the service state of the port. If the service state indicates that the port is in use, then the port is unavailable for certain tests. You must wait until the port is idle before retesting. Attendants are always in use (off-hook) if the handset is plugged in and the port is not busied out. 1. If the port status is idle, then retry the command at 1-minute intervals a maximum of 5 times.

Continued on next page

Table 10-215. TEST #16 DIG-LINE Station Lamp Updates Test — *Continued*

Error Code	Test Result	Description/Recommendation
1392	ABORT	This port is currently a TTI port and the test will not execute on it. 1. Verify that the port is a TTI port using either the **display port** command (the display shows that the port is a TTI port) or the **list config** command (the display shows a `t` for the port). 2. If either **list config** or **display port** indicates that the port is *not* a TTI port, escalate the problem. If both commands indicate that the port is a TTI port, the abort is correct, and no action is necessary.
	FAIL	Internal System Error 1. Retry the command at 1-minute intervals a maximum of 5 times.
	PASS	The message to light all of the station lamps was sent successfully to the port. 1. Observe the station lamps being lit when running the test. If all lamps do not light successfully, the other Digital Line test results may indicate related problems that will not allow the lamps to light. 2. Investigate by using other Digital Line port tests, and by examining the station, wiring, and connections.

Digital Station Audits Test (#17)

This is a series of six tests which are classified as audits. The SPE sends messages to the on-board microprocessor to perform the following tests. These audits run only if the station is in-service.

- Switchhook Inquiry Test — This is an update of the SPE records according to the circuit pack's records. This inquiry is sent all the way to the voice terminal.
- Bad Scan Inquiry Test — A message is sent uplink which contains a count that is generated due to certain events relating to the link conditions. This can be an indication of communications problems between the Processor and Digital Port circuit pack.

- EPF/PTC Inquiry Test — For a TN413 or a TN754 vintage 13 or earlier, the status of the Electronic Power Feed (EPF) is sent uplink. Possible conditions are: EPF-on-ok, EPF-off, and EPF-no-load. For TN754 vintage 14 or later, TN754B or TN2136, TN2181, TN2224, the status of the Positive Temperature Coefficient (PTC) is sent uplink. Possible conditions are: PTC-on-ok, PTC-off, and PTC-no-load.
- ID Request Test — A request is made to the station for its status. The station sends its configuration information and health information back. This information is checked and a pass/fail result is provided.
- Ringer Update Test — This updates the digital telephone ringer state according to the processor records.
- DTMF Administration Update Test — This is a message to the digital station to refresh the default value which causes the station to send touch-tones only in the primary information channel. This value is set initially when the station is put in-service and every time the station's state changes from other states to in-service.

Table 10-216. TEST #17 Station (Digital) Audits Test

Error Code	Test Result	Description/Recommendation
1	ABORT	Switchhook audit timed out.
2	ABORT	ID request fails, health bit returned from voice terminal is bad. 1. Make sure voice terminal is connected and repeat test. 2. If test fails, replace voice terminal and repeat test.
3	ABORT	The EPF/PTC has detected an overcurrent condition. 1. For a TN754 vintage 13 or earlier Digital Line circuit pack, issue the **test PCSSpp long** command. If Test #11 passes, then the EPF/PTC condition has been cleared. Rerun the Short Test Sequence. If Test #11 does not pass, follow the repair procedures described for Test #11. 2. Look for Error Type 769 logged against DIG-LINE and follow the procedures in the associated footnote. If any additional problems are found after completion of maintenance procedures, rerun the test.
4	ABORT	Internal System Error 1. Resolve any outstanding circuit pack maintenance problems. 2. Retry the command at 1-minute intervals a maximum of 5 times.
5	ABORT	Ringer update aborted due to station being in ready-for-service or out-of-service state.

Continued on next page

Table 10-216. TEST #17 Station (Digital) Audits Test — *Continued*

Error Code	Test Result	Description/Recommendation
6	ABORT	This port may have been busied out by system technician. 1. Look in the Error Log for Error Type 18 (port busied out) for this port. If this error type is present, the release the port via the **release station** 2. Make sure that the terminal is connected. 3. Retry the command at 1-minute intervals a maximum of 5 times.
1000	ABORT	System resources required to run this test are not available.
1392	ABORT	This port is currently a TTI port and the test will not execute on it. 1. Verify that the port is a TTI port using either the **display port** command (the display shows that the port is a TTI port) or the **list config** command (the display shows a `t` for the port). 2. If either **list config** or **display port** indicate that the port is *not* a TTI port, escalate the problem. If both commands indicate that the port is a TTI port, the abort is correct, and no action is necessary.
2000	ABORT	Response to the test request was not received within the allowable time period.
	FAIL	Internal System Error 1. Retry the command at 1-minute intervals a maximum of 5 times.
	PASS	Station Audits passed. This Digital Port circuit pack is functioning properly. 1. If complaints persist, investigate by using other port tests, and by examining the station, wiring, and connections.

DIOD-DS1 (DS1 DIOD Trunk)

MO Name (in Alarm Log)	Alarm Level	Initial Command to Run	Full Name of MO
DIOD-DS1	MAJOR[1]	test trunk *group# member#* l	DS1 DIOD Trunk
DIOD-DS1	MINOR	test trunk *group# member#* l	DS1 DIOD Trunk
DIOD-DS1	WARNING	test trunk *group# member#*	DS1 DIOD Trunk

1 A Major alarm on a trunk indicates that alarms on these trunks are not downgraded by the **set options** command and that at least 75 percent of the trunks in this trunk group are alarmed. For more information on the **set options** command, see Chapter 8, “Maintenance Commands and Trouble-Clearing Aids”.

NOTE:
Many trunk problems are caused by incorrect settings of parameters on the trunk group administration form. Settings must be compatible with the local environment and with parameter settings on the far-end. Refer to *Administrator’s Guide for Avaya MultiVantage Software* for information on how to administer trunks. The Application Notes section of that book shows the correct settings for administrable timers and other parameters on a country-by-country basis.

A DS1 DIOD trunk provides a link for digitized voice or data communications between the system and a central office switch. There are two types of DS1 interfaces:

- 24 DS0 channels on a 1.544 Mbps link
- 31 DS0 channels + 1 framing channel on a 2.048 Mbps link
- 32-channel mode is supported only on TN464 circuit packs.

The DS1-DIOD maintenance object monitors and maintains a DIOD trunk port on a TN464 UDS1 Interface circuit pack. See UDS1-BD in this chapter for more information about this circuit pack. The DS1 circuit pack supports low level CO trunk signaling interfaces for both ground-start and loop-start trunks. This maintenance strategy covers the in-line errors log, initialization tests, periodic tests, scheduled tests, demand tests, and alarm resolution and escalation.

Three trunk service states are specified by DS1 DIOD trunk maintenance:

out-of-service	The trunk is in a deactivated state and cannot be used for either incoming or outgoing calls.
in-service	The trunk is in an activated state and can be used for both incoming and outgoing calls.
disconnect (ready-for-service)	The trunk is in an activated state but can only be used for an incoming call.

Hardware Error Log Entries and Test to Clear Values

Table 10-217. DS1 DIOD Error Log Entries

Error Type	Aux Data	Associated Test	Alarm Level	On/Off Board	Test to Clear Value
0[1]	0	Any	Any	Any	test trunk <grp>/<mbr>
1(a)	57408				
1(a)	57487 57476 57477 57485				
15(b)	Any	Port Audit and Update Test (#36)			
18(c)	0	busyout trunk <grp>/<mbr>	WARNING	OFF	release trunk <grp>/<mbr>
130(d)		None	WARNING	ON	test trunk <grp>/<mbr>
257(e)	57392	DS1 CO Dial Tone Seizure Test (#314)	MIN/MAJ[2]	OFF	
513(f)	57393	DS1 Tie Trunk Seizure Test (#136)	MIN/MAJ[2]	OFF	
769(g)	57484				
1025(h)	51200				
1025		DS1 CO Dial Tone Seizure Test (#314)	MIN/ WRN[3]	OFF	test trunk <grp>/<mbr> r 2
1281		Conference Circuit Test (#7)	MIN/ WRN[3]	ON	test trunk <grp>/<mbr> l r 4
1537		NPE Crosstalk Test (#6)	MIN/ WRN[3]	ON	test trunk <grp>/<mbr> l r 3
1793(i)					test board PCSS l
2049(j)	57473 57474 57475				

Continued on next page

Table 10-217. DS1 DIOD Error Log Entries — *Continued*

Error Type	Aux Data	Associated Test	Alarm Level	On/Off Board	Test to Clear Value
2305(k)	50944				
2562(l)	16665				
2817(m)	52992				
3840(n)		Port Audit and Update Test (#36)			

1 Run the Short Test Sequence first. If all tests pass, run the Long Test Sequence. Refer to the appropriate test description and follow the recommended procedures.

2 This alarm will only be raised when the System-Parameter Country form has the Base Tone Generator field set to 4 (Italy). This alarm will be a MINOR alarm unless 75% or more trunks in this trunk group are out of service, then the alarm will be upgraded to a MAJOR alarm.

3 Major alarms on this MO may be downgraded to Warning alarms based on the value used in the set options command.

Notes:

a. Error Type 1—Aux Data 57408—No tip ground is detected on an outgoing call.

   Aux Data 57476—Rotary Dial before Wink.

   Aux Data 57477—Rotary Dial pulse too early.

   Aux Data 57485—Wink too short for a valid signal.

   Aux Data 57487—PBX could not get “loop close” signal

   The DS1 Interface circuit pack detected a hardware fault. These errors will cause the Dial Tone Test (#314) to run and are only considered a problem if the Dial Tone Test fails (in which case Error Type 1025 will also show up). In this case, the trunk may be put in the ready-for-service state (shown as “disconnected” by the status command), which allows only incoming calls. Run the Dial Tone Test (#314) and follow the procedures.

b. Error Type 15—This is a software audit error that does not indicate any hardware malfunction. Run Short Test Sequence and investigate associated errors (if any).

c. Error Type 18—System Technician has busied out the trunk to the out-of-service state. No calls can be made on this trunk except the Facility Access Test Call. For details on this feature, refer to “Facility Test Calls” section in Chapter 5, “Routine Maintenance Procedures”.

d. Error Type 130—This error type indicates that the circuit pack has been removed or has been insane for more than 11 minutes. To clear the error, reinsert or replace the circuit pack.

e. Error Type 257—The DS1 Interface circuit pack detects a hardware fault. Aux Data 57392 indicates no external release on PBX disconnect. Escalate the problem.

f. Error Type 513—The DS1 Interface circuit pack detects a hardware fault. Aux Data 57393 indicates belated external release on PBX disconnect. Escalate the problem.

g. Error Type 769—The DS1 Interface circuit pack detects a hardware fault. The Aux Data field contains the following error type:—57484, fault is detected on tip/ring. Escalate the error.

h. The DS1Interface circuit pack detects a hardware fault, and the Aux Data field contains the following error type: 51200, port is unavailable. Run the Dial Tone Test (#314) and follow procedures.

i. Error Type 1793—DS1 Interface circuit pack is out-of-service. Look for UDS1-BD errors in the Hardware Error Log if the port is on a TN464 UDS1 board. Refer to the UDS1-BD (DS1 Trunk Circuit Pack) Maintenance documentation for details

j. Error Type 2049—With the following Aux Data:

   Aux Data 57473—Rotary dial rate below 8 pulses per second.

   Aux Data 57474—Rotary dial rate above 12 pulses per second.

   Aux Data 57475—Rotary Dial interdigit time is too short.

   The DS1 interface circuit pack detects a hardware error on the DS1 DIOD trunk. The trunk can not communicate with the far-end because it is unable to interpret digits sent from the far-end switch. Check with the far-end switch or Operating Company for proper trunk connection.

k. Error Type 2305—Recorder message, trunk could not be seized (Aux Data 50944). Run Test #314 and follow the outlined procedures.

l. Error Type 2562—Retry Failure error. This error is logged only. It is not a hardware failure and hence does not start any testing or generate any alarms. This error comes from call processing and is generated when a second attempt (retry) to seize an outgoing trunk fails.

m. Error Type 2817—Glare error. This error is logged only. It is not a hardware failure and hence does not start any testing or generate any alarms. This error is the result of a simultaneous seizure of a two-way trunk from both the near-end and the far-end. Attempt to place the call again. If the error persists, execute the Dial Tone Seizure Test (#314) and follow those procedures.

n. Error Type 3840—Port Audit and Update Test (#36) failed due to an internal system error. Enter the **status trunk** command to verify the status of the trunk. If the trunk is out-of-service, then enter the **release trunk** command to put it back into in-service. Retry the test command.

System Technician-Demanded Tests: Descriptions and Error Codes

Always investigate tests in the order they are presented in the table below when inspecting errors in the system. By clearing error codes associated with the *NPE Crosstalk Test,* for example, you may also clear errors generated from other tests in the testing sequence.

Order of Investigation	Short Test Sequence	Long Test Sequence	D/ND[1]
NPE Crosstalk Test (#6)		X	ND
Conference Circuit Test (#7)		X	ND
DS1 Dial Tone Test (#314)	X	X	ND
Port Audit and Update Test (#36)	X	X	ND

1 D = Destructive; ND = Nondestructive

NPE Crosstalk Test (#6)

One or more Network Processing Elements (NPEs) resides on each circuit pack with a TDM Bus interface. (The TN464 UDS1 circuit pack has one SCOTCH-NPE chip instead of several NPE chips.) The NPE controls port connectivity and gain, and provides conferencing functions on a per-port basis. The NPE Crosstalk Test verifies that this port's NPE channel talks on the selected time slot and never crosses over to time slots reserved for other connections. If the NPE is not working correctly, one-way and noisy connections may be observed. This test is usually only part of a port's Long Test Sequence and takes about 20 to 30 seconds to complete.

Table 10-218. TEST #6 NPE Crosstalk Test

Error Code	Test Result	Description/Recommendation
	ABORT	System resources required for this test are not available. 1. Retry the command at 1-minute intervals a maximum of 5 times.
1000	ABORT	System resources required to run this test are not available. The port may be in use on a valid call. Use the **status station** or **status trunk** command to determine when the port is available for testing. 1. Retry the command at 1-minute intervals a maximum of 5 times. 2. If the test continues to abort, and the port is not in use, escalate the problem.
1001	ABORT	System resources required for this test are not available. 1. Retry the command at 1-minute intervals a maximum of 5 times.
1002	ABORT	The system could not allocate time slots for the test. The system may be under heavy traffic conditions or it may have time slots out-of-service due to TDM-BUS errors. The **status health** command can be used to determine if the system is experiencing heavy traffic. Refer to the TDM-BUS (TDM Bus) Maintenance documentation to diagnose any active TDM-BUS errors. 1. If system has no TDM-BUS errors and is not handling heavy traffic, repeat test at 1-minute intervals a maximum of 5 times.
1003	ABORT	The system could not allocate a tone receiver for the test. The system may be oversized for the number of Tone Detectors present or some tone detectors may be out-of-service. The **list measurements tone-receiver** command will display information on the system's tone receivers. 1. Look for TTR-LEV errors in the Error Log. If present, refer to TTR-LEV (TTR Level) Maintenance documentation. 2. Look for TONE-PT errors in the Error Log. If present, refer to TONE-PT (Tone Generator) Maintenance documentation. 3. If neither condition exists, retry the test at 1-minute intervals a maximum of 5 times.

Continued on next page

Table 10-218. TEST #6 NPE Crosstalk Test — *Continued*

Error Code	Test Result	Description/Recommendation
1004	ABORT	The port has been seized by a user for a valid call. Use the **status trunk** command to determine when the port is available for testing. 1. Retry the command at 1-minute intervals a maximum of 5 times. 2. If the test continues to abort, and the port is not in use, escalate the problem.
1020	ABORT	The test did not run due to a previously existing error on the specific port or a more general circuit pack error. 1. Examine Error Log for existing errors against this port or the circuit pack and attempt to diagnose the already existing error.
2000	ABORT	Response to the test request was not received within the allowable time period.
2100	ABORT	System resources required for this test are not available. 1. Retry the command at 1-minute intervals a maximum of 5 times.
2053	ABORT	At least one of the following errors is found on the DS1 circuit pack: 1281—Loss of signal 1793—Blue Alarm 2049—Red Alarm 2305—Yellow Alarm 1537—Hyperactivity Look for the above error types in the Hardware Error Log and follow the procedures given in the appropriate DS1-BD or UDS1-BD maintenance documentation for the listed error types.
	FAIL	The NPE of the tested port was found to be transmitting in error. This will cause noisy and unreliable connections. 1. Replace the circuit pack.
	PASS	The port is correctly using its allocated time slots. User-reported troubles on this port should be investigated using other port tests and examining station, trunk, or external wiring.

Conference Circuit Test (#7)

One or more Network Processing Elements (NPEs) reside on each circuit pack with a TDM Bus interface. (The TN464 UDS1 circuit pack has one SCOTCH-NPE chip instead of several NPE chips). The NPE controls port connectivity and gain, and provides conferencing functions on a per-port basis. The Conference Circuit Test verifies that the NPE channel for the port being tested can correctly perform the conferencing function. The NPE is instructed to listen to several different tones and conference the tones together. The resulting signal is then measured by a tone detector port. If the level of the tone is within a certain range, the test passes.

Table 10-219. TEST #7 Conference Circuit Test

Error Code	Test Result	Description/Recommendation
	ABORT	System resources required for this test are not available. 1. Retry the command at 1-minute intervals a maximum of 5 times.
1000	ABORT	System resources required to run this test are not available. The port may be in use on a valid call. Use the **status station** or **status trunk** command to determine when the port is available for testing.
1004	ABORT	The port has been seized by a user for a valid call. Use the **status station** or **status trunk** command to determine when the port is available for testing. 1. Retry the command at 1-minute intervals a maximum of 5 times. 2. If the test continues to abort, and the port is not in use, escalate the problem.
1018	ABORT	Test disabled via administration. This only applies to analog stations. 1. To enable test, set the Test field on the station administration screen for the particular analog station being tested to ‘‘y.’’ Use the **change station extension** command.
1020	ABORT	The test did not run due to a previously existing error on the specific port or a more general circuit pack error. 1. Examine Error Log for existing errors against this port or the circuit pack and attempt to diagnose the previously existing error.

Continued on next page

Table 10-219. TEST #7 Conference Circuit Test — *Continued*

Error Code	Test Result	Description/Recommendation
2000	ABORT	Response to the test request was not received within the allowable time period.
2100	ABORT	System resources required for this test are not available. 1. Retry the command at 1-minute intervals a maximum of 5 times.
2053	ABORT	At least one of the following errors is found on the DS1 circuit pack: 1281—Loss of signal 1793—Blue Alarm 2049—Red Alarm 2305—Yellow Alarm 1537—Hyperactivity Look for the above error types in the Hardware Error Log and follow the procedures given in the appropriate DS1-BD or UDS1-BD maintenance documentation for the listed error types.
	FAIL	The NPE of the tested port did not conference the tones correctly. This will cause noisy and unreliable connections. 1. Replace the circuit pack.
	PASS	The port can correctly conference multiple connections. User-reported troubles on this port should be investigated by using other port tests and by examining station, trunk, or external wiring.

Port Audit and Update Test (#36)

This test sends port level translation data from switch processor to the DS1 Interface circuit pack to assure that the trunk's translation is correct. Translation updates include the following data: trunk type (in/out), dial type, timing parameters, and signaling bits enabled. The port audit operation verifies the consistency of the current state of trunk kept in the DS1 Interface circuit pack and in the switch software.

Table 10-220. TEST #36 Port Audit and Update Test

Error Code	Test Result	Description/Recommendation
	ABORT	Internal System Error 1. Retry the command at 1-minute intervals a maximum of 5 times.
2000	ABORT	Response to the test request was not received within the allowable time period.
2100	ABORT	Could not allocate the necessary system resources to run this test.
	FAIL	Test failed due to internal system error. 1. Retry the command at 1-minute intervals a maximum of 5 times.
	PASS	Trunk translation has been updated successfully. The current trunk states kept in the DS1 Interface circuit pack and switch software are consistent. If the trunk is busied out, the test will not run but will return PASS. To verify that the trunk is in-service: 1. Enter the **status trunk** command to verify that the trunk is in-service. If the trunk is in-service, no further action is necessary. If the trunk is out-of-service, continue to step 2. 2. Enter the **release trunk** command to put the trunk back into in-service. 3. Retry the test command.

DS1 CO Dial Tone Seizure Test (#314)

DS1 CO Dial Tone Seizure Test checks the trunk's signaling capability provided by the DS1 Interface circuit pack. The maintenance software initiates the test by sending a "seizure" message to the DS1 Interface circuit pack and expects an "active" reply from the DS1 interface circuit pack. If the "active" message is received, then the test passes. If no message is received and the timer expires, the test is aborted. If the DS1 Interface circuit pack sends a "reorder" message back to maintenance software, then the test fails.

This test cannot be run on a trunk in any of the following conditions:

- The trunk direction is administered as an incoming only trunk.
- The trunk has been seized by a normal trunk call.
- The trunk is administered with maintenance test disabled.

Table 10-221. TEST #314 DS1 CO Dial Tone Seizure Test

Error Code	Test Result	Description/Recommendation
	ABORT	Internal System Error 1. Retry the command at 1-minute intervals a maximum of 5 times.
1000	ABORT	System resources required to run this test are not available. The port may be in use on a valid call. Use the **status trunk** command to determine when the port is available for testing.
1004	ABORT	The port has been seized by a user for a valid call. Use the **status trunk** command to determine when the port is available for testing. 1. Retry the command at 1-minute intervals a maximum of 5 times. 2. If the test continues to abort, and the port is not in use, escalate the problem.
1005	ABORT	Test failed due to incompatible configuration administered in trunk group form. 1. Look at the trunk group administration form and see whether the trunk is incoming only, port 24 on a DS1 Interface with common control channel signaling, or an automatic CO type such as FX. Under any of these conditions this is a normal abort.
1018	ABORT	Test has been disabled via administration. 1. Verify that the ‘‘Maintenance Tests’’ field on the Trunk Group Form is set to ‘‘n.’’ To enable the test, issue the **change trunk-group x** command where ‘‘x’’ equals the number of the trunk group to be tested. Then change the entry in the “Maintenance Tests’’ field on the form to “y.’’ 2. Repeat the test.
1020	ABORT	The DS1 Interface circuit pack is out-of-service. 1. Look for UDS1-BD errors in the Hardware Error Log. If present, refer to the UDS1-BD (DS1/UDS1 Trunk Circuit Pack) Maintenance documentation. 2. Retry the command.

Continued on next page

Table 10-221. TEST #314 DS1 CO Dial Tone Seizure Test — *Continued*

Error Code	Test Result	Description/Recommendation
2000	ABORT	Response to the test request was not received within the allowable time period.
2100	ABORT	Could not allocate the necessary system resources to run this test. 1. Retry the command at 1-minute intervals for a maximum of 5 times.
2053	ABORT	At least one of the following errors is found on the DS1 circuit pack: 1281—Loss of signal 1793—Blue Alarm 2049—Red Alarm 2305—Yellow Alarm 1537—Hyperactivity Look for the above error types in the Hardware Error Log and follow the procedures given in the appropriate DS1-BD or UDS1-BD maintenance documentation for the listed error types.
	FAIL	The trunk cannot be seized for an outgoing call. 1. Verify that the Trunk Type field on the trunk administration screen form matches the trunk type administered on far end switch. 2. Look for UDS1-BD errors in Hardware Error Log. If present, refer to the UDS1-BD (DS1/UDS1 Trunk Circuit Pack) Maintenance documentation. 3. Retry the test at 1-minute intervals for a maximum of 5 times.
	PASS	The trunk can be seized for an outgoing call.

DIOD-TRK (DIOD Trunk), DIOD-BD (DIOD Circuit Pack) [G1.2SE]

MO Name (in Alarm Log)	Alarm Level	Initial Command to Run[1]	Full Name of MO
DIOD-BD[2]	MINOR	test port PCSS s	DIOD Circuit Pack

1 Where P is the port network number (1 for PPN, 2 for EPN, and 3 for the second EPN); C is the carrier designation (for example, A, B, C, D, or E); and SS is the address of the slot in the carrier where the circuit pack is located (for example, 01, 02, etc.)

2 Where **1** is Long, **s** is Short, and **r** is repeat. Refer to the XXX-BD (Common Port Board) Maintenance Documentation.

DIOD-TRK (DIOD Trunk) [G1.2SE]

MO Name (in Alarm Log)	Alarm Level	Initial Command to Run[1]	Full Name of MO
DIOD-TRK	MAJOR[2]	test port PCSSpp l	DIOD Trunk
DIOD-TRK	MINOR	test port PCSSpp l	DIOD Trunk
DIOD-TRK	WARNING	test port PCSSpp l	DIOD Trunk

1 Where P is the port network number (1 for PPN, 2 for EPN, and 3 for the second EPN); C is the carrier designation (for example, A, B, C, D, or E); and SS is the address of the slot in the carrier where the circuit pack is located (for example, 01, 02, etc).

2 A MAJOR alarm on a trunk indicates that alarms on these trunks are not downgraded by the **set options** command and that at least 75 percent of the trunks in this trunk group are alarmed.

Direct Inward and Outward Dial (TN429 DIOD) trunks are 2-wire analog lines to the CO which support the following services:

- both incoming and outgoing CO calls
- DID trunk
- DID Trunk and 1-way Outgoing DIOD

The DIOD Trunk circuit pack provides eight ports for loop-start CO. The circuit pack is an interface between the 2-wire analog line from the CO and the system's (4-wire) TDM Bus.

LOOP START OPERATION

Idle State - Tip = ground, Ring = CO Battery

A. Outgoing Call

1. PBX Off-Hook (Seize Message): Closes the Tip-Ring Loop
    a. CO Response: DC loop current + Dial tone
2. PBX On-Hook (Drop Message): Open Tip-Ring loop, no loop current
    a. CO Response: CO goes to idle state (see Note)

B. Incoming Call

1. CO Applies Ringing Voltage
    a. PBX Response: Detect ringing current
2. PBX Off-Hook (Answer Message): Close loop
    a. CO Response: Trip ringing, provide loop current
3. PBX On-Hook (Drop Message): Open Tip-Ring loop, no loop current
    a. CO Response: CO goes to idle state (see Note)

C. Direct Inward Dialing (DID)

1. CO Applies Ringing Voltage
    a. PBX Response: Detect ringing current and close loop
    b. CO Response: Send DTMF digits
    c. PBX Response: Acknowledge of Number dialed and open loop
2. PBX Off-Hook (Answer Message): Close loop
    a. CO Response: Trip ringing, provide loop current
3. PBX On-Hook (Drop Message): Open Tip-Ring loop, no loop current
    a. CO Response: CO goes to idle state (see Note)

NOTE:
CO does not normally provide an On-Hook (Disconnect) signal.

Hardware Error Log Entries and Test to Clear Values

Table 10-222. DIOD Trunk Error Log Entries

Error Type	Aux Data	Associated Test	Alarm Level	On/Off Board	Test to Clear Value
0[1]	0	Any	Any	Any	test port PCSSpp sh r 1
15 (b)	any	Port Audit Update Test (#36)			
18	0	busyout trunk <grp>/<mbr>			
769 (a)	57392	None	MAJ/MIN/ WRN[2]	ON	
1537		Dial Tone Test (#0)	MAJ/MIN/ WRN[2]	ON	test port PCSS l r 2
1793		Loop Around and Conference Test (#33)	MAJ/MIN/ WRN[2]	ON	test port PCSS l r 3
2049		NPE Cross Talk Test (#6)	MAJ/MIN/ WRN[2]	ON	test port PCSS l r 3
2561 (a, d)	57345	None			
2817 (a,e)	57393	None			
3073 (a,c)	57376	None			
3073 (a,c)	57424	None			
3585 (a,c)	57424	None			

1 Run the Short Test Sequence first. If all tests pass, run the Long Test Sequence. Refer to the appropriate test description and follow the recommended procedures.

2 Minor alarms on this MO may be downgraded to warning alarms based on the values used in the **set options** command. If the Minor alarm is not downgraded by the **set-options** values, the Minor alarm is upgraded to a Major alarm if 75 percent of the trunks in this trunk group are alarmed.

Notes:

a. These are in-line errors that have no specific test associated with them. Refer to the following table for an explanation and appropriate action.

b. This is a software audit error that does not indicate any hardware malfunction. Run the Short Test Sequence and investigate associated errors (if any).

c. Aux data 57376 - No loop current on incoming call

Aux data 57424 - No loop current on outgoing call

These errors cause the Dial Tone Test (#0) to run and are only considered a problem if the Dial Tone Test fails (in which case Error Type 1537 also shows up). In this case, the trunk may be put in “Ready-for-Service” state (shown as “disconnected” by status command), which allows only incoming calls. Run the Dial Tone Test (#0) and follow its outlined procedures.

d. Single polarity ringing current - This error results from abnormal ringing current, but does not prevent the incoming call from being accepted. This error code is only logged as an informational event and causes no other testing to occur.

e. Late CO Trunk release - This error indicates that the CO releases the trunk at least four minutes after the PBX dropped the call. This error code is only logged as an informational event and causes no other testing to occur.

Table 10-223. DIOD Trunk Errors with NO Tests

Error Type	Aux Data	Description and System Action	System Technician Action
769	57392	CO not releasing after call is dropped from PBX end (TN747B), or the loop is not open after a disconnect (TN765). After several occurrences, an off-board (TN747B) or on-board (TN465) warning alarm is generated.	Refer problem to CO.
2561	57345	Single polarity ringing current. This error results from abnormal ringing current, but does not prevent the incoming call from being accepted. One cause could be that the reverse current detector associated with the port is failing. (Will not be detected by any tests.) The other cause could be that normal current is not detected. In this case, neither incoming nor outgoing calls can be completed, and the dial tone test also fails.	Check for other errors.
2817	57393	CO released the trunk at least four minutes after the PBX dropped the call. This error code is log only and causes no other testing to occur. No alarm is generated.	Check for other errors.
3073	57376	No loop current on incoming call. The incoming destination has already answered and no loop current has been detected. If this is a hard fault, the dial tone test and all outgoing calls should also fail.	Check for other errors.
3585	57424	No loop current on outgoing call. This error occurs on attempt to seize a loop or ground-start trunk for an outgoing call. An error occurs if loop current is not detected or the caller hangs up before it is detected.	See Note at end of table.

NOTE:
At the administration terminal, busyout the affected port, and run a Long test. If Dial Tone Test #0 passes, ignore this error. Release the port.

System Technician-Demanded Tests: Descriptions and Error Codes

Always investigate tests in the order they are presented in the table below when inspecting errors in the system. By clearing error codes associated with the *NPE Crosstalk Test,* for example, you may also clear errors generated from other tests in the testing sequence.

For example, you may also clear errors generated from other tests in the testing sequence.

Order of Investigation	Short Test Sequence	Long Test Sequence	D/ND[1]
NPE Crosstalk Test (#6)		X	ND
Dial Tone Test (#0)		X	ND
Loop Around and Conference Test (#33)		X	ND
Audit Update Test (#36)	X	X	ND

1 D = Destructive; ND = Nondestructive

Dial Tone Test (#0)

This test attempts to seize a port and checks for the return of a dial tone.

Table 10-224. TEST #0 Dial Tone Test

Error Code	Test Result	Description/Recommendation
	ABORT	Could not allocate system resources to run this test. 1. Retry the command at one-minute intervals a maximum of 5 times.
1000	ABORT	System resources required to run this test are not available. The port may be busy with a valid call. Use the command **display port PCSSpp** to determine the trunk group/member number of the port. Use the **status trunk** command to determine the service state of the port. If the service state indicates that the port is in use, then the port is unavailable for certain tests. You must wait until the port is idle before retesting. 1. If the port status is idle, then retry the command at one-minute intervals a maximum of 5 times.
1001	ABORT	Could not allocate the necessary system resources to run this test. 1. Retry the command at one-minute intervals a maximum of 5 times.
1002	ABORT	The system could not allocate time slots for the test. The system may be under heavy traffic conditions or it may have time slots out-of-service due to TDM-BUS errors. Refer to TDM-BUS (TDM Bus) Maintenance documentation to diagnose any active TDM-BUS errors. 1. If the system has no TDM-BUS errors and is not handling heavy traffic, repeat test at one-minute intervals a maximum of 5 times.
1004	ABORT	The port has been seized by a user for a valid call. Use the **status trunk** command to determine when the port is available for testing. 1. Retry the command at 1-minute intervals a maximum of 5 times. 2. If the test continues to abort and the port is not in use, escalate the problem.

Continued on next page

Table 10-224. TEST #0 Dial Tone Test — *Continued*

Error Code	Test Result	Description/Recommendation
1018	ABORT	Test has been disabled via administration. 1. Verify that the "Maintenance Tests?" field on the Trunk Group Form is set to "n." To enable the test, issue the **change trunk-group x** command where "x" equals the number of the trunk group to be tested. Then change the entry in the "Maintenance Tests?" field on the form to "y."
1005	ABORT	Trunk has been administered as incoming-only; or DID trunk group type; dial tone can only be obtained on outgoing trunks. This is a normal condition.
2000	ABORT	Response to the test was not received within the allowable time period. 1. Retry the command at one-minute intervals a maximum of 5 times.
	FAIL	Trunk was seized, but dial tone could not be detected. 1. Check for errors on TONE-BD or TONE-PT. Clear any errors found and repeat test. 2. If error has still not cleared, refer problem to CO.
2002	FAIL	Seizure portion of test failed due to hardware problem. Fault is usually caused by a disconnected trunk. 1. Check trunk wiring to ensure good connection; repeat test if wiring correction made. 2. Locate another identical CO trunk and swap its wiring with one under test. Repeat test on both trunks and determine if problem follows trunk or remains at original port. If problem follows trunk, refer problem to CO. If problem remains at port, replace circuit pack and repeat test. 3. If replacing circuit pack does not clear failure, escalate the problem.
1009	PASS	Detected tone was not pure dial tone. No action required.
	PASS	Trunk was seized, and dial tone was detected. User-reported troubles on this port should be investigated by using other port tests and by examining trunk or external wiring.

NPE Crosstalk Test (#6)

One or more NPEs reside on each circuit pack with a TDM Bus interface. The NPE controls port connectivity and gain, and provides conferencing functions on a per port basis. The NPE Crosstalk Test verifies that this port's NPE channel talks on the selected time slot and never crosses over to time slots reserved for other connections. If the NPE is not working correctly, one way and noisy connections may be observed. This test is usually only part of a port's long test sequence and takes approximately 20 to 30 seconds to complete.

Table 10-225. TEST #6 NPE Crosstalk Test

Error Code	Test Result	Description/Recommendation
	ABORT	Could not allocate the necessary system resources to run this test. 1. Retry the command at one-minute intervals a maximum of 5 times.
1000	ABORT	System resources required to run this test are not available. The port may be busy with a valid call. Use the **display port PCSSpp** command to determine the trunk group/member number of the port. Use the **status trunk** command to determine the service state of the port. If the service state indicates that the port is in use, then the port is unavailable for certain tests. You must wait until the port is idle before retesting. 1. If the port status is idle, then retry the command at one-minute intervals a maximum of 5 times.
1001	ABORT	Could not allocate the necessary system resources to run this test. 1. Retry the command at one-minute intervals a maximum of 5 times.
1002	ABORT	The system could not allocate time slots for the test. The system may be under heavy traffic conditions or it may have time slots out-of-service due to TDM-BUS errors. Refer to TDM-BUS (TDM-Bus) Maintenance documentation to diagnose any active TDM-BUS errors. 1. If system has no TDM-BUS errors and is not handling heavy traffic, repeat test at one-minute intervals a maximum of 5 times.

Continued on next page

Table 10-225. TEST #6 NPE Crosstalk Test — *Continued*

Error Code	Test Result	Description/Recommendation
1003	ABORT	The system could not allocate a tone receiver for the test. The system may be oversized for the number of tone detectors present or some tone detectors may be out-of-service. 1. Look for TTR-LEV errors in the Error Log. If present, refer to TTR-LEV Maintenance documentation. 2. Look for TONE-PT errors in the Error Log. If present, refer to TONE-PT Maintenance documentation. 3. If neither condition exists, retry the test at one-minute intervals a maximum of 5 times.
1004	ABORT	The port was seized by a valid call during the test. The test has been aborted. Use the **display port PCSSpp** command to determine the trunk group/member number of the port. Use the **status trunk** command to determine the service state of the port. If the service state indicates that the port is in use, then the port is unavailable for certain tests. You must wait until the port is idle before retesting.
2000	ABORT	Response to the test request was not received within the allowable time period.
2100	ABORT	Could not allocate the necessary system resources to run this test. 1. Retry the command at one-minute intervals a maximum of 5 times.
Any	FAIL	The NPE of the tested port was found to be transmitting in error. This causes noisy and unreliable connections. 1. Replace the circuit pack.
	PASS	The port is correctly using its allocated time slots. User-reported troubles on this port should be investigated by using other port tests and by examining trunk or external wiring.

Loop Around and Conference Circuit Test (#33)

This test checks the reflective loop and conference abilities of a CO port circuit. The test uses 404 Hz, 1004 Hz, and 2804 Hz tones. Each tone is transmitted separately through the loop and checked.

Table 10-226. TEST #33 Loop Around and Conference Circuit Test

Error Code	Test Result	Description/Recommendation
	ABORT	Could not allocate system resources to run this test.
7	ABORT	Conference Circuit Test aborted.
1000	ABORT	System resources required to run this test are not available. The port may be busy with a valid call. Use the **display port PCSSpp** command to determine the trunk group/member number of the port. Use the **status trunk** command to determine the service state of the port. If the service state indicates that the port is in use, then the port is unavailable for certain tests. You must wait until the port is idle before retesting. 1. If the port status is idle, then retry the command at one-minute intervals a maximum of 5 times.
1004	ABORT	The port has been seized by a user for a valid call. Use the **status trunk** command to determine when the port is available for testing. 1. Retry the command at one-minute intervals a maximum of 5 times. 2. If the test continues to abort and the port is not in use, escalate the problem.
2100	ABORT	Could not allocate the necessary system resources to run this test. 1. Retry the command at one-minute intervals a maximum of 5 times.

Continued on next page

Table 10-226. TEST #33 Loop Around and Conference Circuit Test — *Continued*

Error Code	Test Result	Description/Recommendation
7	FAIL	1. Check for errors on TONE-BD or TONE-PT. If there are errors, take the appropriate actions. 2. If the Reflective Loop Around Test fails for all ports on a circuit pack, a -5 volt power problem is indicated. If a TN736 or TN752 power unit circuit pack is present, check the circuit pack for a red LED. If the red LED is on, then replace the appropriate power unit circuit pack. If neither the TN736 nor the TN752 power unit circuit pack is present, then the OLS631DB AC power unit may be defective. The system may contain a TN736 or TN752 power unit circuit pack OR an OLS631DB AC power unit, BUT NOT BOTH TYPES OF POWER UNITS. **NOTE:** To investigate problems with an OLD631DB AC power source, refer to CARR-POW Maintenance documentation. 3. Rerun the test. 4. If the test fails again, replace the circuit pack.
	PASS	CO Trunk Loop Around and Conference Test is successful. User-reported troubles on this port should be investigated by using other port tests and by examining trunk or external wiring.

Port Audit Update Test (#36)

This test sends updates of the CO port translation for all ports on the circuit pack which have been translated. The update is non-disruptive and guards against possible corruption of translation data contained on the circuit pack. No response message is expected from the circuit pack once it receives translation updates. The port translation data includes: ground or loop start trunk, tone or rotary dialing trunk, rotary dialing inter-digit timing, network balance R/RC, and disconnect timing.

Table 10-227. TEST #36 Port Audit Update Test

Error Code	Test Result	Description/Recommendation
	ABORT	Could not allocate necessary system resources to run the test. 1. Retry at one-minute intervals a maximum of 5 times.
2100	ABORT	Could not allocate the necessary system resources to run the test.
	FAIL	Internal System Error. 1. Retry the command at one-minute intervals a maximum of 5 times.
	PASS	This test passed. Translation information was successfully updated on the circuit pack. User-reported troubles on this port should be investigated by using other port tests and by examining trunk or external wiring. If the trunk is busied out, the test does not run, but returns PASS. To verify that the trunk is in-service: 1. Enter **status-trunk** to verify that the trunk is in-service. If the trunk is in-service, no further action is necessary. If the trunk is out-of-service, continue to Step 2. 2. Enter **release-trunk** to put trunk back into in-service. 3. Retry the test command.

DLY-MTCE (MO-DAILY)

MO Name (in Alarm Log)	Alarm Level	Initial Command to Run	Full Name of MO
DLY-MTCE	MINOR	NONE	DLY-MTCE
DLY-MTCE	MAJOR	NONE	DLY-MTCE

The DLY-MTCE maintenance object monitors daily translation saves. If a translation save times out or fails to run, an error is logged against this maintenance object.

If Save Fails	Then System Raises
Three times in a row	MINOR Alarm
Seven times in a row	MAJOR Alarm

Daily Maintenance Interference

All of the actions used in DEFINITY administration commands are listed in the table below. The command actions that, while active, interfere with daily maintenance are also indicated. They are the **add**, **change**, **duplicate**, **remove**, and **set** commands. These commands are frequently used by customer administrators while performing routine administration of DEFINITY.

Table 10-228. DEFINITY Command Actions

Likely to Disrupt	Less Likely to Disrupt	
add	backup	ping
change	busyout	recycle
duplicate	clear	release
remove	display	reset
set	enable	restore
	format	resume
	get	save
	list	status
	mark	test
	monitor	upgrade
	netstat	

Some other command actions can also interfere with daily maintenance when certain qualifiers are used in the command, or under certain circumstances. For example, certain “test” commands, when used with the modifier “continuously”, could potentially interfere with daily maintenance. However, such command actions are not used typically by customer administrators doing routine administration, and are less likely to disrupt daily maintenance routines than are the **add**, **change**, **duplicate**, **remove**, and **set** command actions.

Incomplete Command Time-out

A time-out feature has been added to the MAINTENANCE-RELATED SYSTEM PARAMETERS form (accessed by the command **change system parameters maintenance**). This feature improves the operation of daily maintenance by allowing maintenance routines to run that might otherwise not run. It also helps to prevent the loss of translations that were not saved by the **save translation** command, and were also not saved because daily maintenance was prevented from running prior to the system reset. Highlights of the feature include:

- Options for blank, 1, 2, 3, 4, 5, or 6 hours (the default is 2 hours)
- The blank option indicates that the feature is not active
- Only commands that block the running of daily maintenance (add, change, duplicate, remove, and set) are affected
- All logins will time-out if any of these commands are active for the prescribed time (except for the “blank” option)
- The feature applies to all logins, regardless of type (init, dadmin, craft, inads) or permissions granted to the specific login ID of an administration or maintenance user
- The corresponding “time-out” entry is appended to the list history log

The `Command Time-out` field can be viewed by customer administrators. A craft, init, dadmin, or inads login is required to change the option for the field. Screen -610 shows the MAINTENANCE-RELATED SYSTEM PARAMETERS screen. Screen -610 shows an example of the LIST HISTORY form with the "time-out" entry. The final line indicates that **change system-parameters maintenance** was being executed when the time-out period of 2 hours expired.

```
 change system-parameters maintenance                            Page 1  of  4

              MAINTENANCE-RELATED SYSTEM PARAMETERS

OPERATIONS SUPPORT PARAMETERS
          Product Identification: 1000000000
      First OSS Telephone Number: 5551212         Abbrev Alarm Report? y
     Second OSS Telephone Number: 5551213         Abbrev Alarm Report? n
Alarm Origination to OSS Numbers: both
      Cleared Alarm Notification? y              Suspension Threshold: 5
            Restart Notification? y
         Test Remote Access Port? n
      CPE Alarm Activation Level: none

SCHEDULED MAINTENANCE

                      Start Time: 22: 00                    Stop Time: 04: 00
                Daily Maintenance: daily              Save Translation: daily
                                                 Command Time-out (hours): 2
     Control Channel Interchange: no        System Clocks Interchange: no
                 SPE Interchange: no
```

Screen 10-3. Maintenance-Related System Parameters (change system-parameters maintenance)

```
 list history

                              HISTORY


                Date of Loaded Translation: no translation loaded


 Date      Time      Port      Login     Actn    Object      Qualifier


 9/18      16:13     MGR1      init      logn

 9/18      16:13     MGR1      init      logf                TIME-OUT

 9/18      14:13     MGR1      init      cha system-param maintenance
```

Screen 10-4. "Command Time-out" Entry in the LIST HISTORY Form.

DS1-BD (DS1 Interface Circuit Pack)

MO Name (in Alarm Log)	Alarm Level	Initial Command to Run[1]	Full Name of MO
DS1-BD	MAJOR	test board UUCSS sh	DS1 Interface Circuit Pack
DS1-BD	MINOR	test board UUCSS l	DS1 Interface Circuit Pack
DS1-BD	WARNING	test board UUCSS sh	DS1 Interface Circuit Pack

1 UU is the universal cabinet number (1 for PPN, 2 - 3 for EPNs). C is the carrier designation (A, B, C, D, or E). SS is the number of the slot in which the circuit pack resides (01 to 21).

The DS1 Interface circuit pack provides an interface to an external DS1 facility and supports 24 DS0 channels carried on a 1.544 Mbps DS1 link. These DS0 channels can be administered as either trunks to other switches or lines to off-premises stations. The TN464C and later suffix Universal DS1 Interface also supports a 32-channel interface on a 2.048Mbps link. The functions and maintenance strategy for the TN464 circuit packs are covered under a separate maintenance object, UDS1-BD.

DS1-BD maintenance logs in-line errors reported by the DS1 Interface circuit pack, runs tests for error diagnosis and recovery, and raises and clears alarms. The following table shows the capabilities of each DS1 circuit pack. The TN722 and TN722B are not supported on G3r V1 or later systems.

Circuit Pack Code	24 Channel	32 Channel	Tie Trunk Signaling	CO Trunk Signaling	DID Trunk Signaling	OPS Line Signaling
TN722/B	x		x			
TN767/B/ C/D/E	x		x	x	x	x
TN464C/ D/E/F/GP	x	x	x	x	x	x (24-chl only)

ISDN-PRI Trunk signaling (for example, Q.921, Q.931) requires a TN464D and is handled by system software. The TN464 is covered in the “UDS1-BD (UDS1 Interface Circuit Pack)” section of Chapter 9.

Each trunk and line have their own maintenance strategies. However, they all depend on the health of the DS1 Interface circuit pack. Refer to the following sections for details: TIE-DS1, CO-DS1, DID-DS1, OPS-LINE, ISDN-TRK, and ISDN-PLK. Signaling over the DS1 link must be synchronized between the transmitting and receiving ends to ensure error-free communication. Refer to “SYNC (Synchronization)” for details.

The TN767E circuit pack combined with 120A1 CSU Module forms an Enhanced Integrated CSU. The new 120A1 CSU Module, when combined with the functionality provided by the TN767E hardware and firmware, and new switch software, provides functionality equivalent to an external stand-alone ESF T1 CSU. The 120A1 CSU Module connects to the TN767E circuit pack on the I/O connector panel on the back of the port carrier. The new CSU Module, thus becomes an integrated part of the DEFINITY system. Throughout the document, the term 120A1 will mean a 120A1 or later suffix CSU Module.

The Enhanced Integrated CSU is for use in the United States of America with 1.544 Mbps DS1 service.

The TN767E and 120A1 CSU Module support on-demand loopback tests that assist in the detection of faults between the TN767E circuit pack and the CSU Module, between the Integrated CSU and the optional Customer Premises Loopback Jack, or between the Integrated CSU and remote CSU. These loopback tests are explained in detail later in this DS1-BD section, but Figure 10-27 on page 10-613 gives a high level overview of the loopback points.

The following list of acronym definitions are for Figure 10-27 on page 10-613:

- PLB = Payload Loopback
- BLB = Board Loopback
- ELB = Equipment Loopback
- LLB = Line Loopback
- RLB = Repeater Loopback
- CLJ = Loopback Jack Loopback
- R-LLB = Remote Line Loopback
- SMRT = Smart Jack
- LPBK = Loopback

For more information about DS1 interfaces, see the *DEFINITY Communications System DS1/CEPT1/ISDN-PRI Reference*, 555-025-107.

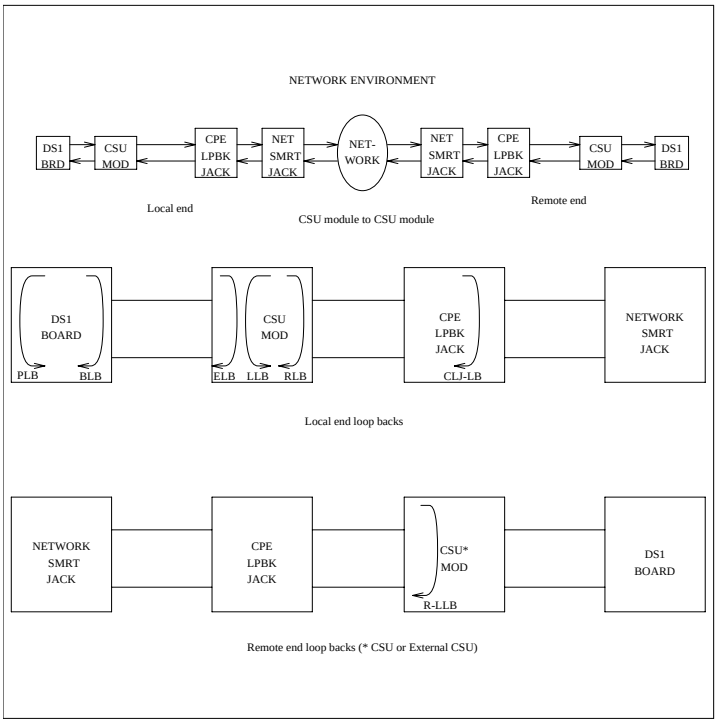

Figure 10-27. High Level Overview Of Loopback Points

Error Log Entries and Test to Clear Values

Table 10-229. DS1 Interface Circuit Pack Maintenance Error Log Entries

Error Type	Aux Data	Associated Test	Alarm Level	On/ Off Board	Test to Clear Value
0[1]	0	Any	Any	Any	test board UUCSS
1 (a)	0	Circuit pack removed or SAKI Test (#53)	MIN/WRN ‡	ON	
18 (b)	0	busy-out board UUCSS	WARNING	OFF	release board UUCSS
23 (c)	0		WARNING	OFF	add ds1 UUCSS
12 5(d)		None	MINOR	ON	

Continued on next page

Table 10-229. DS1 Interface Circuit Pack Maintenance Error Log Entries — *Continued*

Error Type	Aux Data	Associated Test	Alarm Level	On/ Off Board	Test to Clear Value
257	6553 5	Control Channel Loop Test (#52)	MINOR	ON	test board UUCSS l r 20
257 (e)	Any	None			
513 (f)	Any		MINOR	ON	
769 (g)	4358				
1025 (e)	4363	NPE Audit Test (#50)			
1281	Any	Loss of Signal Alarm Inquiry Test (#138)	MIN/WRN †	OFF	test board UUCSS
1300 (h)	Any	Loss Of Signal Alarm Inquiry Test (#138)	WARNING	OFF	test board UUCSS
1301 (i)	Any	Loss Of Signal Alarm Inquiry Test (#138)	WARNING	OFF	test board UUCSS
1302 (j)	Any	Loss Of Signal Alarm Inquiry Test (#138)	MIN/WRN †	OFF	test board UUCSS
1303 (k)	Any	Loss Of Signal Alarm Inquiry Test (#138)	MIN/WRN †	ON	test board UUCSS
1310 (l)	Any	Board Loopback Test (#1209)	MINOR	ON	test ds1-loop UUCSS ds1/csu-loopback-tests
1311 (m)	Any	Equipment Loopback Test (#1210)	MIN/WRN †	OFF	test ds1-loop UUCSS ds1/csu-loopback-test
1312 (n)	Any	Repeater Loopback Test (#1211)	MIN/WRN †	OFF	test ds1-loop UUCSS ds1/csu-loopback-tests
1313 (o)	Any	CPE Loopback Jack Test (#1212)	MIN/WRN †	OFF	test ds1-loop UUCSS end-loopback/span-test
1314 (p)	Any	Far CSU Loopback Test (#1213)	MIN/WRN †	OFF	test ds1-loop UUCSS end-loopback/span-test
1320	Any	Loss of Signal Alarm Inquiry Test (#138)	MIN/WRN †	OFF	test board UUCSS
1321	Any	Loss of Signal Alarm Inquiry Test (#138)	MIN/WRN †	OFF	test board UUCSS
1322	Any	Loss of Signal Alarm Inquiry Test (#138)	MINOR	ON	test board UUCSS
1323	Any	Loss of Signal Alarm Inquiry Test (#138)	MIN/WRN †	OFF	test board UUCSS

Continued on next page

Table 10-229. DS1 Interface Circuit Pack Maintenance Error Log Entries — *Continued*

Error Type	Aux Data	Associated Test	Alarm Level	On/ Off Board	Test to Clear Value
1324	Any	Loss of Signal Alarm Inquiry Test (#138)	WARNING	OFF	test board UUCSS
1538 (q)	Any		MINOR	ON	
1793	Any	Blue Alarm Inquiry Test (#139)	MAJ/MIN/ WRN **	OFF	test board UUCSS
1794	Any	Blue Alarm Inquiry Test (#139)	MAJ/MIN/ WRN **	OFF	test board UUCSS
1795	Any	Blue Alarm Inquiry Test (#139)	MAJ/MIN/ WRN **	OFF	test board UUCSS
2049	Any	Red Alarm Inquiry Test (#140)	MIN/WRN †	OFF	test board UUCSS
2305	Any	Yellow Alarm Inquiry Test (#141)	MINOR	OFF	test board UUCSS
2306	Any	Yellow Alarm Inquiry Test (#141)	MINOR	OFF	test board UUCSS
2561	Any	Major Alarm Inquiry Test (#142)	MIN/WRN †	OFF	test board UUCSS
2817		Minor Alarm Inquiry Test (#143)	MIN/WRN †	OFF	test board UUCSS
3073 to 3160 (r)	Any	Slip Alarm Inquiry Test (#144)	MIN/WRN †	OFF	test board UUCSS r 6
3329 to 3345 (s)	Any	Misframe Alarm Inquiry Test (#145)	MIN/WRN †	OFF	test board UUCSS r 6
3840(t)	Any	None			
3900(u)	Any	CPE Loopback Jack Test (#1212)			
3901(v)	Any	Far CSU Loopback Test (#1213)			
3902(w)	Any	One-Way Span Test (#1214)			
3999 (x)	Any	None			

1 Run the Short Test Sequence first. If all tests pass, run the Long Test Sequence. Refer to the appropriate test description and follow the recommended procedures.

Notes:

a. This error indicates that the circuit pack has stopped functioning or is not completely administered. The alarm is logged about 15 minutes after the circuit pack has been removed or 11 minutes after the SAKI Test (#53) fails.

   To be completely administered, a DS1 circuit pack must meet all 3 of the following conditions:

   1. Have an entry in the circuit plan via the **change circuit pack** command
   2. Be administered via the **add ds1 UUCSS** command
   3. Be physically inserted in the appropriate slot

   If the circuit pack has an entry in the circuit plan and either of the other two conditions are *not* met, a MINOR alarm is logged. To resolve the error either

   1. Make sure all conditions for administration are met and that a functioning DS1 circuit pack is inserted in the correct slot.
   2. Completely remove the DS1-BD from the system using the following steps:
      a. Remove any administered DS1 trunks or access endpoints associated with the circuit pack from their trunk groups.
      b. Execute the **remove ds1 UUCSS** and **change circuit pack UUCSS commands.**

   If all the administration conditions are met for this circuit pack and the red LED is still on, follow the instructions for *LED Alarms with Error Type 1* in Chapter 7.

b. The DS1 Interface circuit pack has been busied out by a **busy-out board** UUCSS command.

c. The DS1-BD circuit pack is not completely administered. A completely administered DS1-BD circuit pack should have an entry in the circuit plan via the **change circuit pack** command, should have been administered via the **add ds1 UUCSS** command, and should have been inserted into the appropriate port slot.

d. The circuit pack in the slot does not match the type administered to that position. Either replace the circuit pack with one of the type administered, or use **change circuit-pack** to readminister the slot. This error may also indicate that the 24/32-channel selection on the DS1 administration form does not match the configuration of the circuit pack.

e. This error is associated with the Common Port Circuit Pack Maintenance Test. Refer to “XXX-BD (Common Port Circuit Pack)” for details.

f. The DS1 Interface circuit pack has detected a transient hardware problem (for example, external RAM failure, internal RAM failure, internal ROM failure, or instruction set failure). This error will disappear when no faults are detected for 30 minutes. The value in the Aux Data field indicates the type of hardware problem. However, when this error is reported with Aux Data in the range of 4352 to 4358, it indicates the circuit pack has reported a hardware failure. Escalate this problem.

g. The DS1 Interface circuit pack has detected a transient hardware logic error (for example, program logic inconsistency). This error will disappear when no faults are detected for 100 minutes. The value in Aux Data field indicates the type of hardware problem.

h. CSU Module or T1 Sync Splitter missing. The `Near-End CSU Type` field on the **add ds1** form has been administered as `integrated` but the 120A1 CSU Module or T1 Sync Splitter is not physically connected (or is improperly connected) to the TN767E board on the back of the port carrier.

   If using the 120A1 CSU Module or T1 Sync Splitter, plug (or replug) the CSU Module/T1 Sync Splitter into the TN767E circuit pack's connector on the I/O connector panel on back of the carrier. Otherwise, change the `Near-End CSU Type` field using the **change ds1** form to `other`.

   If this error remains after plugging the CSU Module/ T1 Sync Splitter into the board's connector, there could be a problem with the I/O connector panel.

i. CSU Module/T1 Sync Splitter not expected. The 120A1 CSU Module/T1 Sync Splitter is physically connected to the TN767E board on the back of the port carrier but the `Near-End CSU Type` field on the **add ds1** form has not been administered as `integrated`.

   If the 120A1 CSU Module/T1 Sync Splitter is to be used, use the **change ds1** command to change the `Near-End CSU Type` field to `integrated`. Otherwise, physically remove the 120A1 CSU Module/T1 Sync Splitter from the back of the port carrier.

j. DS1 configuration error. Attempting to use the 120A1 CSU Module with a TN767E circuit pack that is configured for 32-channel (2.048 Mbps) operation. The CSU Module only works with a DS1 board configured for 24-channel (1.544 Mbps) operation in the United States of America.

k. DS1 circuit pack suffix incorrect for CSU Module/T1 Sync Splitter. The `Near-End CSU Type` field on the **add ds1** form has been administered as `integrated` but the DS1 circuit pack is not a TN767E or later suffix DS1 board.

   If the 120A1 CSU Module/T1 Sync Splitter is to be used, remove the circuit pack and replace it with a TN767E or later suffix board. Otherwise, use the **change ds1** command to change the `Near-End CSU Type` field to `other`.

l. BLB failure. This error occurs when the DS1 Board Loopback (BLB) demand test fails. Repeat the test using the following commands: **busyout board UUCSS**, **test ds1-loop UUCSS ds1/csu-loopback-tests**, **release board UUCSS**. If the BLB test continues to fail, then the TN767E circuit pack needs to be replaced.

m. ELB failure. This error occurs when the Integrated CSU (I-CSU) Module Equipment Loopback (ELB) test fails. This test is executed during I-CSU/T1 Sync Splitter power-up/reset (i.e., the TN767E board is physically inserted and the CSU Module/T1 Sync Splitter is already installed) or when the CSU Module/T1 Sync Splitter is plugged on to an already initialized DS1 board. The ELB test is also executed as part of the command **test ds1-loop UUCSS ds1/csu-loopback-tests**.

   Attempt to clear the alarm via the following commands: **busyout board UUCSS**, **test ds1-loop UUCSS ds1/csu-loopback-tests**, and **release board UUCSS**. If the ELB test continues to fail, then either the TN767E board, the CSU Module, the T1 Sync Splitter, or the I/O cable between the backplane and the CSU Module/T1 Sync Splitter (or any combination thereof) has failed. Attempt to isolate where the failure is occurring by re-executing the test. If it continues to fail, escalate this problem.

n. RLB failure. This error occurs when the Integrated CSU (I-CSU) Module Repeater Loopback (RLB) test fails. This test is executed during I-CSU/T1 Sync Splitter power-up/reset (i.e., the TN767E board is physically inserted and the CSU Module/T1 Sync Splitter is already installed) or when the CSU Module/T1 Sync Splitter is plugged on to an already initialized DS1 board. The RLB test is also executed as part of the command **test ds1-loop UUCSS ds1/csu-loopback-tests**.

   Attempt to clear the alarm via the following commands: **busyout board UUCSS**, **test ds1-loop UUCSS ds1/csu-loopback-tests**, and **release board UUCSS**. If the RLB test continues to fail, then the CSU Module/T1 Sync Splitter needs to be replaced.

o. CPE Loopback Jack deactivation error. This error occurs when the TN767E circuit pack could not deactivate a CPE Loopback Jack loopback.

   Attempt to clear the alarm via the following commands: **busyout board UUCSS**, **test ds1-loop UUCSS end-loopback/span-test**, and **release board UUCSS**. If the attempt to deactivate the CPE Loopback Jack loopback continues to fail, other steps must be taken to deactivate the loopback.

p. Far CSU Loopback deactivation error. This error occurs when the TN767E circuit pack could not deactivate a far-end CSU loopback on power-up/reset or upon software request.

   Attempt to clear the alarm via the following commands: *busyout board UUCSS*, *test ds1-loop UUCSS end-loopback/span-test*, *release board UUCSS*. If the attempt to deactivate the Far CSU loopback continues to fail, then escalate the problem.

q. The hyperactive circuit pack is out-of-service and may exhibit one or more of the following symptoms:

   1. The common circuit pack level tests such as Test #51 and/or Test #220 are aborting with error code 2000.
   2. The tests run on the ports of this circuit pack are returning NO BOARD.
   3. A busy-out/release of the circuit pack has no affect on test results.
   4. A **list configuration** command shows that the circuit pack and ports are properly installed.

   The circuit pack is isolated from the system and all trunks of this circuit pack are placed into the out-of-service state. The system will try to restore the circuit pack within 15 minutes. When no faults are detected for 15 minutes, the DS1 Interface circuit pack is restored to normal operation. All trunks of the DS1 Interface circuit pack are then returned to the in-service state. If the error recurs after 15 minutes, then escalate this problem.

r. For later releases of G3V4 and beyond, only error 3073 will show that this board is receiving Slips and the AUX data shows the last Slip count that was reported.

s. For later releases of G3V4 and beyond, only error 3329 will show that this board is receiving misframes and the AUX data shows the last misframe count that was reported.

t. This error is not service-affecting and can be ignored.

u. Error 3900 is used to give status information on a CPE Loopback Jack Test. The value in the Aux Data field indicates the status of the loopback test.

   1 — Test is currently running.

   2 — Test failed because loopback could not be activated.

   3 — Test failed because test pattern could not be detected.

   4 — Test has been terminated.

v. Error 3901 is used to give status information on a Far CSU Loopback Test. The value in the Aux Data field indicates the status of the loopback test.

   1 — Test is currently running.

   2 — Test failed because loopback could not be activated.

   3 — Test failed because test pattern could not be detected.

   4 — Test has been terminated.

w. Error 3902 is used to give status information on a One-Way Span Test. The value in the Aux Data field indicates the status of the span test.

1 — Test is currently running.

2 — Test has failed because test could not be activated.

3 — Test pattern was not received from the far end.

4 — Test has been terminated.

x. Error type 3999 indicates that the circuit pack sent a large number of control channel messages to the switch within a short period of time. If error type 1538 is also present, then the circuit pack was taken out-of-service due to hyperactivity. If error type 1538 is not present, then the circuit pack has not been taken out-of-service, but it has generated 50% of the messages necessary to be considered hyperactive. This may be completely normal during heavy traffic periods. However, if this error type is logged when the circuit pack is being lightly used, it may indicate a problem with the circuit pack or the equipment attached to it.

System Technician-Demanded Tests: Descriptions and Error Codes

Always investigate tests in the order they are presented in Table 10-230. By clearing error codes associated with the *NPE Connection Audit Test,* for example, you may also clear errors generated from other tests in the testing sequence

Table 10-230. System Technician-Demanded Tests: DS1-BD

Order of Investigation	Short Test Sequence	Long Test Sequence	Reset Board Sequence	test ds1-loop Command	D/ ND[1]
NPE Connection Audit Test (#50)		X			ND
Control Channel Loop Test (#52)		X			ND
Loss of Signal Alarm Inquiry Test (#138)	X	X			ND
Blue Alarm Inquiry Test (#139)	X	X			ND
Red Alarm Inquiry Test (#140)	X	X			ND
Yellow Alarm Inquiry Test (#141)	X	X			ND
Major Alarm Inquiry Test (#142)	X	X			ND
Minor Alarm Inquiry Test (#143)	X	X			ND
Slip Alarm Inquiry Test (#144)	X	X			ND
Misframe Alarm Inquiry Test (#145)	X	X			ND
Translation Update Test (#146)	X	X			ND
ICSU Status LEDs Test (#1227)	X	X			ND

Continued on next page

Table 10-230. System Technician-Demanded Tests: DS1-BD — *Continued*

Order of Investigation	Short Test Sequence	Long Test Sequence	Reset Board Sequence	test ds1-loop Command	D/ ND[1]
SAKI Sanity Test (#53)			X		D
Internal Looparound Test (#135)			X		D
DS1/CSU Loopback Tests				X	D
DS1 Board Loopback Test (#1209)				X	D
CSU Equipment Loopback Test (#1210)				X	D
CSU Repeater Loopback Test (#1211)				X	D
CPE Loopback Jack Test (#1212)				X	D
Far CSU Loopback Test (#1213)				X	D
One-Way Span Test (#1214)				X	D
Inject Single Bit Error (#1215)				X	D
End Loopback/Span Test (#1216)				X	D

1 D = Destructive, ND = Non-destructive

NPE Connection Audit Test (#50):

The system sends a message to the on-board microprocessor to update the network connectivity translation for all the Network Processing Elements (NPEs) on the circuit pack.

Table 10-231. TEST #50 NPE Connection Audit Test

Error Code	Test Result	Description/Recommendation
None 2100	ABORT	System resources required for this test are not available.
1019	ABORT	Test already in progress.
	FAIL	Internal system error 1. Retry the command at 1-minute intervals a maximum of 5 times.
	PASS	The circuit pack's NPEs have been updated with their translation.
0	NO BOARD	The test could not relate the internal ID to the port (no board). This could be due to incorrect translations, no board is inserted, an incorrect board is inserted, or an insane board is inserted. 1. Check to ensure that the board translations are correct. Use the **add ds1 UUCSS** command to administer the DS1 interface if it is not already administered. 2. If board was already administered correctly, check the error log to determine if the board is hyperactive. If this is the case, the board is shut down. Reseating the board will re-initialize the board. 3. Issue the **busyout board** command. 4. Issue the **reset board** command. 5. Issue the **release busy board** command. 6. Issue the **test board long** command. This should re-establish the linkage between the internal ID and the port.

Control Channel Looparound Test (#52)

This test queries the circuit pack for its circuit pack code and vintage and verifies its records.

Table 10-232. TEST #52 Control Channel Looparound Test

Error Code	Test Result	Description/Recommendation
None 2100	ABORT	System resources required for this test are not available. 1. Retry the command at 1-minute intervals a maximum of 5 times.
	FAIL	The test failed because the circuit pack did not return the circuit pack code or vintage. **NOTE:** Error type 1538 indicates hyperactivity. The hyperactive circuit pack is out of service and one or more of the following symptoms may be exhibited. 1. The DS1-BD tests (such as Test 138 and Test 139) are aborting with error code 2000. 2. The tests run on the ports of this circuit pack are returning a no board result. 3. **busyout** and **release** have no affect on the test result. 4. **list config** shows that the circuit pack and the ports are properly installed. When hyperactivity occurs, the circuit pack is isolated from the system, and all of the trunks for this circuit pack are placed into the out-of-service state. The system tries to restore the circuit pack within 15 minutes. When no faults are detected for 15 minutes, the DS1 interface circuit pack is restored to normal operation, and all of the trunks for the DS1 interface circuit pack are returned to the in-service state. Hyperactivity is often caused by the associated facility, and faults (such as slips, misframes, or blue alarms) are entered in the error log. Many hardware errors are logged against the associated trunk circuits. If the facility is OK and the error occurs again after 15 minutes, escalate this problem. 1. Retry the command for a maximum of 5 times. 2. If the problem continues, check for hyperactivity. Resolve the problem, as appropriate. 3. If there is no longer hyperactivity, retry the command for a maximum of 5 times. 4. If the test continues to fail, escalate this problem.

Continued on next page

Table 10-232. TEST #52 Control Channel Looparound Test — *Continued*

Error Code	Test Result	Description/Recommendation
	PASS	Communication with this circuit pack is successful.
0	NO BOARD	The test could not relate the internal ID to the port (no board). This could be due to incorrect translations, no board is inserted, an incorrect board is inserted, or an insane board is inserted. 1. Ensure that board translations are correct. Use **add ds1 UUCSS** to administer the DS1 interface if it is not already administered. 2. If the board was already administered correctly, check the error log to see if the board is hyperactive. If this is the case, the board is shut down. Reseating the board to re-initialize. 3. If the board was correctly inserted in step 1, use **busyout board**. 4. Issue the **reset board** command. 5. Issue the **release busy board** command. 6. Issue the **test board long** command. This should re-establish the linkage between the internal ID and the port.

SAKI Sanity Test (#53)

This test is destructive. This test resets the circuit pack.

Table 10-233. TEST #53 SAKI Sanity Test

Error Code	Test Result	Description/Recommendation
None	ABORT	System resources required for this test are not available. 1. Retry the command at 1-minute intervals a maximum of 5 times.
1005	ABORT	Wrong circuit pack configuration to run this test. This error applies only to DS1 Interface circuit packs. It means the DS1 Interface circuit pack is providing timing for the system and, therefore, it cannot be reset without major system disruptions. 1. If the circuit pack needs to be reset, then set synchronization to another DS1 Interface circuit pack or to the Tone-Clock circuit pack and try again. Refer to “SYNC (Synchronization)”.
1015	ABORT	Port is not out-of-service. 1. Busyout the circuit pack. 2. Execute the command again.
2100	ABORT	System resources required for this test are not available. 1. Retry the command at 1-minute intervals a maximum of 5 times.
1	FAIL	The circuit pack failed to reset.

Continued on next page

Table 10-233. TEST #53 SAKI Sanity Test — *Continued*

Error Code	Test Result	Description/Recommendation
2	FAIL	The circuit pack failed to restart. 1. Execute the command again. 2. If the problem persists, escalate this problem.
	PASS	The circuit pack initializes correctly. 1. Run the Short Test Sequence.
0	NO BOARD	The test could not relate the internal ID to the port (no board). This could be due to incorrect translations, no board is inserted, an incorrect board is inserted, or an insane board is inserted. 1. Check to ensure that the board translations are correct. Use the **add ds1 UUCSS** command to administer the DS1 interface if it is not already administered. 2. If board was already administered correctly, check the error log to determine if the board is hyperactive. If this is the case, the board is shut down. Reseating the board will re-initialize the board. 3. If the board was found to be correctly inserted in step 1, issue the **busyout board** command. 4. Issue the **reset board** command. 5. Issue the **release busy board** command. 6. Issue the **test board long** command. This should re-establish the linkage between the internal ID and the port.

Internal Looparound Test (#135)

This test is destructive.

The Internal Looparound Test is run by looping the transmitted DS1 bit stream back into the DS1's board receiver. The loop occurs just before the DS1 facility interface. The test is highly destructive and can only be initiated by a system technician-demanded **reset board UUCSS** command.

All trunks on the DS1 Interface circuit pack must be busied out via the system technician **busy-out board** command before running the Internal Looparound Test. When the Internal Looparound Test is initiated, maintenance software sends appropriate messages to the DS1 Interface circuit pack to start the test. The test uses the Tone Generator and Tone Detector to exercise a bit pattern consistency test for all ports. If the transmitted and received bit patterns on a trunk are different, the test fails.

When the test is complete, the maintenance software sends a stop loop around message to the DS1 Interface circuit pack to put the circuit pack back into the normal operation mode. All trunks of the DS1 Interface circuit pack are restored to the in-service state after the **release board** command is entered

Table 10-234. TEST #135 Internal Looparound Test

Error Code	Test Result	Description/Recommendation
2012	ABORT	Internal system error 1. Retry the command at 1-minute intervals a maximum of 5 times.
1002	ABORT	The system could not allocate time slots for the test. The system may be under heavy traffic conditions or it may have time slots out-of-service due to TDM-BUS errors. 1. If system has no TDM-BUS errors and is not handling heavy traffic, repeat test at 1-minute intervals a maximum of 5 times.
1003	ABORT	The system could not allocate a tone receiver for the test. The system may be oversized for the number of Tone Detectors present or some Tone Detectors may be out-of-service. 1. Resolve any TTR-LEV errors. 2. Resolve any TONE-PT errors. 3. If neither condition exists, retry the test at 1-minute intervals a maximum of 5 times.
1004	ABORT	Received an incoming call on a port of the DS1 circuit pack during the test. 1. Enter the **busy-out board UUCSS** command to put all trunks of DS1 Interface circuit pack to out-of-service state. 2. Retry the command at 1-minute intervals a maximum of 5 times.
1015	ABORT	Ports on DS1 Interface circuit pack have not been busied out. 1. Enter the **busy-out board UUCSS** command to put all trunks of the DS1 Interface circuit pack into out-of-service state. 2. Retry the command.

Continued on next page

Table 10-234. TEST #135 Internal Looparound Test — *Continued*

Error Code	Test Result	Description/Recommendation
1039	ABORT	The DS1 Interface circuit pack is providing timing for the system. Therefore, it cannot be reset without major system disruption. 1. If the DS1 Interface circuit pack needs to be tested, set the synchronization reference to another DS1 Interface circuit pack or to the Tone-Clock circuit pack via the following command sequence: ■ Issue the **disable synchronization-switch** command. ■ Next, issue the **set synchronization UUCSS** command. ■ Lastly, issue the **enable synchronization-switch** command.
2000	ABORT	The test was aborted. Response to the test was not received within the allowable time period. This may be due to hyperactivity. Error type 1538 in the error log indicates hyperactivity. The hyperactive circuit pack is out of service and one or more of the following symptoms may be exhibited. 1. The DS1-BD tests (such as Test 139 and Test 140) are aborting with error code 2000. 2. The tests run on the ports of this circuit pack are returning a no board result. 3. A **busyout** or a **release** command has no affect on the test results. 4. A **list config** command shows that the circuit pack and the ports are properly installed. **NOTE:** When hyperactivity occurs, the circuit pack is isolated from the system, and all of the trunks for this circuit pack are placed into the out of service state. The system will try to restore the circuit pack within 15 minutes. When no faults are detected for 15 minutes, the DS1 interface circuit pack is restored to normal operation. All of the trunks for the DS1 interface circuit pack are then returned to the in service state. Hyperactivity is often caused by the associated facility. In such a case, faults (such as slips, misframes, or blue alarms) would be entered in the error log. In addition, many hardware errors would be logged against the associated trunk circuits. If the facility is OK and the error occurs again after 15 minutes, escalate this problem.

Continued on next page

Table 10-234. TEST #135 Internal Looparound Test — *Continued*

Error Code	Test Result	Description/Recommendation
2100	ABORT	Could not allocate the necessary system resources to run this test. 1. Retry the command at 1-minute intervals for a maximum of 5 times.
	FAIL	DS1 Interface circuit pack failed in the Internal Looparound Test. 1. Retry the command at 1-minute intervals a maximum of 5 times. 2. If the DS1 Interface circuit pack is TN767, enter the **list measurement ds1-log UUCSS** command to read the error seconds measurement. Otherwise, skip this step. 3. Verify that both endpoints of the DS1 link are administered using the same signaling mode, framing mode, and line coding. 4. Check the physical connectivity of DS1 Interface circuit packs and cable. 5. Contact T1 Network Service to diagnose remote DS1 endpoint. 6. If all of the above are OK, escalate this problem.
	PASS	All administered trunks of DS1 Interface circuit pack pass the Internal Looparound Test. The bit pattern consistency test is executed successfully over the path that covers a DS1 port, cable, and the external NCTE device.

Continued on next page

Table 10-234. TEST #135 Internal Looparound Test — *Continued*

Error Code	Test Result	Description/Recommendation
0	NO BOARD	The test could not relate the internal ID to the port (no board). This could be due to incorrect translations, no board is inserted, an incorrect board is inserted, or an insane board is inserted. 1. Check to ensure that the board translations are correct. Use the **add ds1 UUCSS** command to administer the DS1 interface if it is not already administered. 2. If board was already administered correctly, check the error log to determine if the board is hyperactive. If this is the case, the board is shut down. Reseating the board will re-initialize the board. 3. If the board was found to be correctly inserted in step 1, issue the **busyout board** command. 4. Issue the **reset board** command. 5. Issue the **release busy board** command. 6. Issue the **test board long** command. This should re-establish the linkage between the internal ID and the port.

Loss of Signal Alarm Inquiry Test (#138)

This test verifies the synchronization status and continuity of the DS1 link. The Loss of Signal alarm indicates that the DS1 Interface circuit pack is unable to derive the synchronization clock from the DS1 facility. When the DS1 Interface circuit pack detects a Loss of Signal alarm, it stops providing the synchronization clock for the system if it is administered as a timing source and transmits a Yellow alarm to the remote DS1 endpoint.

When the Loss of Signal alarm is confirmed, the maintenance software places all trunks or ports of the DS1 Interface circuit pack into the out-of-service state. The inquiry test will run every 10 minutes until the loss of signal has been restored. The DS1 Interface circuit pack raises a Loss of Signal alarm after the signal has been lost for about 1second. It will not retire the alarm until the signal has returned for about 10 seconds.

This test is also used to maintain the new 120A CSU Module and the 401A T1 Sync Splitter. The CSU Module, when combined with the functionality provided by the TN767E circuit pack, provides functionality equivalent to an external standalone ESF T1 CSU. The 401A T1 Sync Splitter, when combined with the functionality provided by the TN767E circuit pack, allows an ATM switch to derive its timing from a T1 connected to the DS1 in the DEFINITY.

If a TN767E circuit pack detects certain I-CSU/T1 Sync Splitter hardware errors, it will notify maintenance. When the maintenance subsystem receives notification of the error, it will execute this Loss of Signal Inquiry test. The test, in addition to querying for a Loss Of Signal alarm condition, will also query the TN767E board to confirm the error. A Minor or Warning alarm will be raised depending on the severity of the error. The trunks on the board may be taken out of service if the error is deemed serious.

If a Loss Of Signal alarm and an I-CSU/T1 Sync Splitter error co-exist, the Loss Of Signal alarm condition will take priority and the board and all trunks on the board will be put in the out-of-service state. Errors will be logged, however, for both.

When the maintenance subsystem receives notification that the ICSU/T1 Sync Splitter hardware error condition no longer exists, maintenance will restore the board and all trunks to their previous service state if the alarm can be cleared (no other errors or Loss Of Signal alarm exist).

Table 10-235. TEST #138 Loss of Signal Alarm Inquiry Test

Error Code	Test Result	Description/Recommendation
	ABORT	Internal system error
2100	ABORT	Could not allocate the necessary system resources to run this test. 1. Retry the command at 1-minute intervals a maximum of 5 times.

Continued on next page

Table 10-235. TEST #138 Loss of Signal Alarm Inquiry Test — *Continued*

Error Code	Test Result	Description/Recommendation
2000	ABORT	Response to the test was not received within the allowable time period. This may be due to hyperactivity. Error type 1538 in the error log indicates hyperactivity. The hyperactive circuit pack is out of service and one or more of the following symptoms may be exhibited. 1. The DS1-BD tests (such as test 138 and test 139) are aborting with error code 2000. 2. The tests run on the ports of this circuit pack are returning a no board result. 3. A **busyout** or a **release** command has no affect on the test results. 4. A **list config** command shows that the circuit pack and the ports are properly installed. **NOTE:** When hyperactivity occurs, the circuit pack is isolated from the system, and all of the trunks for this circuit pack are placed into the out of service state. The system will try to restore the circuit pack within 15 minutes. When no faults are detected for 15 minutes, the DS1 interface circuit pack is restored to normal operation. All of the trunks for the DS1 interface circuit pack are then returned to the in service state. Hyperactivity is often caused by the associated facility. In such a case, faults (such as slips, misframes, or blue alarms) would be entered in the error log. In addition, many hardware errors would be logged against the associated trunk circuits. If the facility is OK and the error occurs again after 15 minutes, escalate this problem.

Continued on next page

Table 10-235. TEST #138 Loss of Signal Alarm Inquiry Test — *Continued*

Error Code	Test Result	Description/Recommendation
	FAIL	DS1 Interface circuit pack detects a Loss of Signal alarm. The physical link is broken or the remote DS1 endpoint is down. All trunks or ports of this DS1 interface circuit pack are out-of-service. If the DS1 Interface circuit pack is designated as the supplier of the system synchronization source, then the system synchronization maintenance will adopt a source elsewhere. Refer to “SYNC (Synchronization)” section for details. 1. If the DS1 Interface circuit pack connects to a T1 facility, call the vendor of the T1 carrier to diagnose the remote DS1 endpoint. If the DS1 Interface circuit pack connects directly to a switch, call the system technician of the remote switch to diagnose the DS1 endpoint. 2. Check the physical connection of the DS1 Interface circuit pack and the cable. If a 120A1 CSU Module/T1 Sync Splitter is physically connected to a TN767E board on the back of the port carrier, check the physical connection of the CSU Module/T1 Sync Splitter and make sure the Network Interface cable is plugged into the CSU Module’s/T1 Sync Splitter’s NETWORK jack.
1300	FAIL	The CSU Module or the T1 Sync Splitter is missing. The *Near-End CSU Type* field on the *add ds1* form has been administered as *integrated* but the 120A1 CSU Module/T1 Sync Splitter is not physically connected to the TN767E board on the back of the port carrier. 1. If using the 120A1 CSU Module/T1 Sync Splitter, plug the CSU Module/T1 Sync Splitter into the TN767E circuit pack’s connector on the I/O connector panel on back of the carrier. Otherwise, change the *Near-End CSU Type* field using the *change ds1* form to *other*. 2. Run the test again.
1301	FAIL	The 120A1 CSU Module or the T1 Sync Splitter is physically connected to the TN767E board on the back of the port carrier but the *Near-End CSU Type* field on the *add ds1* form has not been administered as *integrated*. 1. If the 120A1 CSU Module/T1 Sync Splitter is to be used, use the *change ds1* command to change the *Near-End CSU Type* field to *integrated*. Otherwise, physically remove the 120A1 CSU Module/T1 Sync Splitter from the back of the port carrier. 2. Run the test again.

Continued on next page

Table 10-235. TEST #138 Loss of Signal Alarm Inquiry Test — *Continued*

Error Code	Test Result	Description/Recommendation
1302	FAIL	Attempting to use the 120A1 CSU Module with a TN767E circuit pack that is configured for 32-channel (2.048 Mbps) operation. The CSU Module only works with a DS1 board configured for 24-channel (1.544 Mbps) operation in the United States of America. 1. If the 120A1 CSU Module is to be used, physically remove the TN767E circuit pack and reconfigure for 24-channel (1.544 Mbps) operation. 2. Reinsert the circuit pack and run the test again.
1303	FAIL	The DS1 circuit pack Suffix is incorrect for CSU Module/T1 Sync Splitter administration. The *Near-End CSU Type* field on the *add ds1* form has been administered as *integrated* but the DS1 circuit pack is not a TN767E or later suffix DS1 board. 1. If the CSU Module or the T1 Sync Splitter is to be used, and the *Near-End CSU* Type field is set to *integrated* to allow for CSU Module/T1 Sync Splitter administration, remove the circuit pack and replace it with a TN767E or later suffix board. Otherwise use the *change ds1* command to change the *Near-End CSU Type* field to *other*.
1310	FAIL	The DS1 Board Loopback (BLB) demand test (#1209) failed. 1. Repeat the test using the *test ds1-loop UUCSS ds1/csu-loopback-tests* command. 2. If the BLB test continues to fail, then replace the TN767E circuit pack. 3. Run this test again.

Continued on next page

Table 10-235. TEST #138 Loss of Signal Alarm Inquiry Test — *Continued*

Error Code	Test Result	Description/Recommendation
1311	FAIL	The Integrated CSU (I-CSU) Module Equipment Loopback (ELB) test (#1210) failed. This test is executed during ICSU/T1 Sync Splitter power-up/reset (the TN767E board is physically inserted and the CSU Module/T1 Sync Splitter is already installed) or when the 120A CSU Module/T1 Sync Splitter is plugged on to an already initialized DS1 board. The ELB test is also executed as part of the command **test ds1-loop UUCSS ds1/csu-loopback-tests**. 1. Execute **test ds1-loop UUCSS ds1/csu-loopback-tests**. 2. If the ELB test continues to fail, then either the TN767E board, the CSU Module/T1 Sync Splitter, or the I/O cable between the backplane and the CSU Module/T1 Sync Splitter (or any combination thereof) has failed. Attempt to isolate the problem to one of these areas. Begin by replacing the CSU Module/T1 Sync Splitter and running the ***t*est ds1-loop UUCSS ds1/csu-loopback-tests** command again. 3. If the ELB test continues to fail, then replace the TN767E board and run **test ds1-loop UUCSS ds1/csu-loopback-tests** again. 4. If the ELB test continues to fail, the problem could be in the I/O cable between the backplane and the CSU Module/T1 Sync Splitter.
1312	FAIL	The Integrated CSU (I-CSU) Module Repeater Loopback (RLB) test (#1211) failed. This test is executed during ICSU/T1 Sync Splitter power-up/reset (the TN767E board is physically inserted and the CSU Module/T1 Sync Splitter is already installed), or when the 120A1 CSU Module/T1 Sync Splitter is plugged on to an already initialized DS1 board. The RLB test is also executed as part of the command ***t*est ds1-loop UUCSS ds1/csu-loopback-tests**. 1. Execute **test ds1-loop UUCSS ds1/csu-loopback-tests**. 2. If the RLB test continues to fail, then replace the CSU Module/T1 Sync Splitter. 3. Run this test again.

Continued on next page

Table 10-235. TEST #138 Loss of Signal Alarm Inquiry Test — *Continued*

Error Code	Test Result	Description/Recommendation
1313	FAIL	The TN767E circuit pack could not deactivate a CPE Loopback Jack loopback. 1. Execute ***test ds1-loop UUCSS end-loopback/span-test***. 2. If the attempt to deactivate the CPE Loopback Jack is not successful, check the cabling and investigate the problem at the CPE Loopback Jack. 3. Run the test again.
1314	FAIL	The TN767E circuit pack could not deactivate a far-end CSU loopback. 1. Execute **test ds1-loop UUCSS end-loopback/span-test**.
1320	FAIL	A CSU Module/T1 Sync Splitter hardware failure or an ICSU/T1 Sync Splitter serial interface audit failure was detected by the TN767E DS1 circuit pack. 1. Replace the CSU Module/T1 Sync Splitter, and then run the test again. 2. If the test continues to fail with this error code, replace the TN767E and run the test again. 3. If the test continues to fail with this error code, the problem could be in the I/O cable between the backplane and the CSU Module/T1 Sync Splitter.
1321	FAIL	DTE LOS (loss of signal) was detected between the TN767E DS1 board and the 120A1 CSU Module or the T1 Sync Splitter. Either the TN767E board, the 120A1 CSU Module/T1 Sync Splitter, or the I/O cable between the backplane and the 120A1 CSU Module or the 401A T1 Sync Splitter (or any combination thereof) has failed. Attempt to isolate the problem to one of these areas. 1. Replace the CSU Module/T1 Sync Splitter and run the test again. 2. If the test continues to fail with this error code, then replace the TN767E board and run the test again. 3. If the test continues to fail with this error code, the problem could be in the I/O cable between the backplane and the 120A1 CSU Module or the 401A T1 Sync Splitter.

Continued on next page

Table 10-235. TEST #138 Loss of Signal Alarm Inquiry Test — *Continued*

Error Code	Test Result	Description/Recommendation
1322	FAIL	No 5 volts power detected from the TN767E circuit pack to the 120A1 CSU Module/T1 Sync Splitter. Problem probably due to an open fuse on the DS1 board or a faulty ICSU/T1 Sync Splitter. **NOTE** *Do not swap DS1 boards as this may open the fuse on the new board*. 1. Remove the TN767E from the system and reinsert. 2. Run the test again once the board has finished its reset. 3. If the test continues to fail with this error code, then replace the CSU Module/T1 Sync Splitter and run the test again. 4. If the test continues to fail with this error code, the problem could be in the I/O cable between the backplane and the 120A1 CSU Module or the 401A T1 Sync Splitter. 5. If the test continues to fail with this error code, escalate this problem.
1323	FAIL	A service-affecting CSU Module/T1 Sync Splitter audit failure was detected by the TN767E DS1 circuit pack. All administered ports on the DS1 circuit pack are affected and maintenance software will place the ports into the out-of-service state. 1. Replace the 120A1 CSU Module/T1 Sync Splitter.
1324	FAIL	A non-service-affecting CSU Module/T1 Sync Splitter audit failure was detected by the TN767E DS1 circuit pack. No ports should be affected. No immediate action is required. These errors indicate that the CSU Module/T1 Sync Splitter hardware may have a problem, and that it should be replaced when practical to avoid further deterioration.

Continued on next page

Table 10-235. TEST #138 Loss of Signal Alarm Inquiry Test — *Continued*

Error Code	Test Result	Description/Recommendation
	PASS	DS1 signal is present and the physical link is healthy. In addition, no Integrated CSU errors are detected.
0	NO BOARD	The test could not relate the internal ID to the port (no board). This could be due to incorrect translations, no board is inserted, an incorrect board is inserted, or an insane board is inserted. 1. Check to ensure that the board translations are correct. Use the **add ds1 UUCSS** command to administer the DS1 interface if it is not already administered. 2. If board was already administered correctly, check the error log to determine if the board is hyperactive. If this is the case, the board is shut down. Reseating the board will re-initialize the board. 3. If the board was found to be correctly inserted in step 1, issue the **busyout board** command. 4. Issue the **reset board** command. 5. Issue the **release busy board** command. 6. Issue the **test board long** command. This should re-establish the link between the internal ID and the port.

Blue Alarm Inquiry Test (#139)

The Blue Alarm is a signal sent by the remote DS1 endpoint when it is out-of-service. The Blue Alarm Inquiry Test checks the blue alarm status of the remote DS1 endpoint.

When the DS1 Interface circuit pack detects a Blue Alarm signal from the remote DS1 endpoint, the circuit pack will transmit a Yellow alarm to the remote DS1 endpoint and send a BLUE ALARM message to the maintenance software. When the Blue alarm is confirmed, the maintenance software places all trunks of the DS1 Interface circuit pack into the out-of-service state. The inquiry test will be run every 10 minutes until the Blue alarm is cleared.

The DS1 Interface circuit pack takes 2 seconds to recognize and report a Blue alarm and 16 seconds to recognize and report the resolution of a Blue alarm. When the Blue alarm is cleared, the DS1 Interface circuit pack stops transmitting the Yellow alarm and places the trunks back into the service state before the Blue alarm occurs.

Line Loopback Alarm

The Line Loopback (LLB) is used by the remote DS1 endpoint to put the ICSU or DS1 into a loopback mode. When the ICSU or DS1 Board is in the LLB mode, the arriving bit pattern is regenerated and sent back. Line Loopback (LLB) Alarm is activated when the in-band activate LLB bit pattern has been arriving continuously for 5 seconds on the DS1 line. LLB is deactivated when the in-band deactivate LLB bit pattern has been arriving continuously for 5 seconds on the DS1 line.

Since LLB is a maintenance condition rendering all DS0 channels unavailable for signaling or bearer traffic, maintenance software treats this the same as a Blue Alarm.

Payload Loopback Alarm

The Payload Loopback (PLB) is used by the remote DS1 endpoint to put the switch DS1 into a loopback mode. PLB Alarm is activated when a network protocol activate bit pattern arrives over the 4-Kbps ESF data link on the DS1 line. PLB is deactivated when a network protocol deactivate bit pattern arrives over the 4-Kbps ESF data link on the DS1 line.

Since PLB is a maintenance condition rendering all DS0 channels unavailable for signaling or bearer traffic, maintenance software treats this the same as a Blue Alarm.

Table 10-236. TEST #139 Blue Alarm Inquiry Test

Error Code	Test Result	Description/Recommendation
	ABORT	Internal system error
2100	ABORT	Could not allocate the necessary system resources to run this test. 1. Retry the command at 1-minute intervals a maximum of 5 times.

Continued on next page

Table 10-236. TEST #139 Blue Alarm Inquiry Test — *Continued*

Error Code	Test Result	Description/Recommendation
2000	ABORT	Response to the test was not received within the allowable time period. This may be due to hyperactivity. Error type 1538 in the error log indicates hyperactivity. The hyperactive circuit pack is out of service and one or more of the following symptoms may be exhibited. 1. The DS1-BD tests (such as test 138 and test 139) are aborting with error code 2000. 2. The tests run on the ports of this circuit pack are returning a no board result. 3. A **busyout** or a **release** command has no affect on the test results. 4. A **list config** command shows that the circuit pack and the ports are properly installed. **NOTE:** When hyperactivity occurs, the circuit pack is isolated from the system, and all of the trunks for this circuit pack are placed into the out of service state. The system will try to restore the circuit pack within 15 minutes. When no faults are detected for 15 minutes, the DS1 interface circuit pack is restored to normal operation. All of the trunks for the DS1 interface circuit pack are then returned to the in service state. Hyperactivity is often caused by the associated facility. In such a case, faults (such as slips, misframes, or blue alarms) would be entered in the error log. In addition, many hardware errors would be logged against the associated trunk circuits. If the facility is OK and the error occurs again after 15 minutes, escalate this problem.
	FAIL	The remote DS1 endpoint is out-of-service. 1. If the DS1 interface circuit pack connects to a T1 facility, call the vendor of the T1 carrier to diagnose the remote endpoint. 2. If the DS1 interface circuit pack connects directly to a switch, call the system technician of the remote switch to diagnose the DS1 endpoint.

Continued on next page

Table 10-236. TEST #139 Blue Alarm Inquiry Test — *Continued*

Error Code	Test Result	Description/Recommendation
1794	FAIL	The DS1 Interface circuit pack detects a Line Loopback Alarm (LLB). 1. If the DS1 interface circuit pack connects to a T1 facility, call the vendor of the T1 carrier to diagnose the remote DS1 endpoint. 2. If the DS1 interface circuit pack connects directly to a switch, call the system technician of the remote switch to diagnose the DS1 endpoint. 3. If the DS1 interface circuit pack connects directly to a line-side terminating device (for example, a PRI terminal adapter), call the vendor of the terminating device to diagnose the equipment.
1795	FAIL	The DS1 Interface circuit pack detects a Payload Loopback Alarm (PLB). If the DS1 Interface circuit pack connects to a leased T1 facility, call the vendor of the T1 carrier to diagnose the remote DS1 endpoint. If the DS1 Interface circuit pack connects directly to another DS1 board, call the system technician of the remote switch to diagnose the DS1 endpoint.
	PASS	Remote DS1 endpoint is in-service. Neither a Blue alarm nor a Line Loopback alarm nor a Payload Loopback alarm is detected in the DS1 Interface circuit pack.
0	NO BOARD	The test could not relate the internal ID to the port (no board). This could be due to incorrect translations, no board is inserted, an incorrect board is inserted, or an insane board is inserted. 1. Check to ensure that the board translations are correct. Use the **add ds1 UUCSS** command to administer the DS1 interface if it is not already administered. 2. If board was already administered correctly, check the error log to determine if the board is hyperactive. If this is the case, the board is shut down. Reseating the board will re-initialize the board. 3. If the board was found to be correctly inserted in step 1, issue the **busyout board** command. 4. Issue the **reset board** command. 5. Issue the **release busy board** command. 6. Issue the **test board long** command. This should re-establish the link between the internal ID and the port.

Red Alarm Inquiry Test (#140)

DS1 Interface circuit pack raises a Red alarm when the framing pattern of the incoming DS1 bit stream has been lost. The Red Alarm Inquiry Test checks the framing status of a DS1 Interface circuit pack. DS1 Interface circuit pack takes 3 seconds to recognize and report a Red alarm and 10 seconds to recognize and report the resolution of a Red alarm.

When the DS1 Interface circuit pack detects a Red alarm, the circuit pack will transmit a Yellow alarm to the remote DS1 endpoint and send a RED ALARM message to the maintenance software. After the Red alarm is confirmed, the maintenance software places all trunks of the circuit pack into the out-of-service state. The inquiry test will be run every 10 minutes until the Red alarm is cleared.

When the Red alarm is cleared, the DS1 Interface circuit pack will stop transmitting the Yellow alarm to the remote DS1 endpoint. The maintenance software restores all trunks of the DS1 Interface circuit pack to the service state before the Red alarm occurs.

Loss of Multiframe Alarm: If the DS1 Interface circuit pack is administered using DMI-BOS signaling, the DS1 Interface circuit pack raises a Loss of Multiframe Alarm (LMA) when it cannot interpret the incoming signaling bits to synchronize to the multiframe pattern received in the 24th channel. Once DS1 Interface circuit pack detects an LMA, the circuit pack will transmit a Remote Multiframe Alarm (RMA) to the remote DS1 endpoint. Maintenance software handles both Red alarm and LMA alarm(s) using the same mechanism.

Table 10-237. TEST #140 Red Alarm Inquiry Test

Error Code	Test Result	Description/Recommendation
	ABORT	Internal system error
2100	ABORT	Could not allocate the necessary system resources to run this test. 1. Retry the command at 1-minute intervals a maximum of 5 times.
2000	ABORT	Response to the test was not received within the allowable time period. This may be due to hyperactivity. Error type 1538 in the error log indicates hyperactivity. The hyperactive circuit pack is out of service and one or more of the following symptoms may be exhibited. 1. The DS1-BD tests (such as test 138 and test 139) are aborting with error code 2000. 2. The tests run on the ports of this circuit pack are returning a no board result. 3. A **busyout** or a **release** command has no affect on the test results. 4. A **list config** command shows that the circuit pack and the ports are properly installed. **NOTE:** When hyperactivity occurs, the circuit pack is isolated from the system, and all of the trunks for this circuit pack are placed into the out of service state. The system will try to restore the circuit pack within 15 minutes. When no faults are detected for 15 minutes, the DS1 interface circuit pack is restored to normal operation. All of the trunks for the DS1 interface circuit pack are then returned to the in service state. Hyperactivity is often caused by the associated facility. In such a case, faults (such as slips, misframes, or blue alarms) would be entered in the error log. In addition, many hardware errors would be logged against the associated trunk circuits. If the facility is OK and the error occurs again after 15 minutes, escalate this problem.

Continued on next page

Table 10-237. TEST #140 Red Alarm Inquiry Test — *Continued*

Error Code	Test Result	Description/Recommendation
	FAIL	The DS1 Interface circuit pack detects a Red alarm. An out-of-frame condition occurs on the DS1 Interface circuit pack. DS1 Interface circuit pack will transmit a Yellow alarm to the remote DS1 endpoint until the Red alarm is retired. 1. Verify that both endpoints of the DS1 link are administered using the same signaling mode, framing mode, and line coding. Likewise, verify that any intermediate CSU's are administered correctly. 2. If the DS1 interface circuit pack connects to a T1 facility, call the vendor of the T1 carrier to diagnose the remote DS1 endpoint. If the DS1 interface circuit pack connects directly to a switch, call the system technician of the remote switch to diagnose the DS1 endpoint. 3. Check the physical connectivity of the DS1 pack and of the cable. 4. If this continues to fail, escalate this problem.
1	FAIL	The DS1 interface circuit pack detected a loss of multiframe alarm (LMA). An out of frame condition occurred on the DS1 interface circuit pack. The DS1 interface circuit pack will transmit a remote multiframe alarm (RMA) to the remote DS1 endpoint until the LMA is retired. 1. Verify that both endpoints of the DS1 link are administered using the same signaling mode, framing mode, and line coding. Likewise, verify that any intermediate CSU's are administered correctly. 2. If the DS1 interface circuit pack connects to a T1 facility, call the vendor of the T1 carrier to diagnose the remote DS1 endpoint. If the DS1 interface circuit pack connects directly to a switch, call the system technician of the remote switch to diagnose the DS1 endpoint. 3. Check the physical connectivity of the DS1 pack and of the cable. 4. If this continues to fail, escalate this problem.

Continued on next page

Table 10-237. TEST #140 Red Alarm Inquiry Test — *Continued*

Error Code	Test Result	Description/Recommendation
	PASS	No Red alarm is detected on DS1 Interface circuit pack.
0	NO BOARD	The test could not relate the internal ID to the port (no board). This could be due to incorrect translations, no board is inserted, an incorrect board is inserted, or an insane board is inserted. 1. Check to ensure that the board translations are correct. Use the **add ds1 UUCSS** command to administer the DS1 interface if it is not already administered. 2. If board was already administered correctly, check the error log to determine if the board is hyperactive. If this is the case, the board is shut down. Reseating the board will re-initialize the board. 3. If the board was found to be correctly inserted in step 1, issue the **busyout board** command. 4. Issue the **reset board** command. 5. Issue the **release busy board** command. 6. Issue the **test board long** command. This should re-establish the linkage between the internal ID and the port.

Yellow Alarm Inquiry Test (#141)

Receiving a Yellow alarm from remote DS1 endpoint indicates that the remote DS1 endpoint has an out-of-frame condition. The Yellow Alarm Inquiry Test is used to determine whether the remote DS1 endpoint is transmitting a Yellow alarm. The DS1 Interface circuit pack takes 500 msec to recognize and report a Yellow alarm and 500 msec to recognize and report that a Yellow alarm condition is cleared.

When the DS1 Interface circuit pack detects a Yellow alarm from the remote DS1 endpoint, it will send a YELLOW-ALARM uplink message to the maintenance software. After the maintenance software receives the YELLOW-ALARM message, the Yellow Alarm Inquiry Test is run to confirm the Yellow alarm. Once the Yellow alarm is confirmed, the maintenance software places all trunks on the circuit pack into the out-of-service state. The Inquiry Test will be run every 10 minutes until the Yellow alarm is cleared.

When the Yellow alarm is cleared, the maintenance software restores all trunks on the DS1 Interface circuit pack back to their previous service state before the Yellow alarm is raised.

This Yellow Alarm corresponds to the yellow F2 state documented in CCITT recommendation I.431.

Remote Multiframe Alarm: Remote Multiframe Alarm (RMA) indicates that the remote DS1 endpoint is in a Loss of Multiframe Alarm condition while the DS1 Interface circuit pack is administered using the DMI-BOS common channel signaling. The RMA is handled as a Yellow alarm.

Yellow F5 State Alarm: For 32-channel E1 operation with CRC4 on, the F5 fault state is defined as a fault in the user-network interface, specifically in the direction from the user (PBX) to the network. Refer to CCITT recommendation I.431

Table 10-238. TEST #141 Yellow Alarm Inquiry Test

Error Code	Test Result	Description/Recommendation
	ABORT	Internal system error
2100	ABORT	Could not allocate the necessary system resources to run this test. 1. Retry the command at 1-minute intervals a maximum of 5 times.
2000	ABORT	Response to the test was not received within the allowable time period. This may be due to hyperactivity. Error type 1538 in the error log indicates hyperactivity. The hyperactive circuit pack is out of service and one or more of the following symptoms may appear. 1. The DS1-BD tests (such as test 138 and test 139) are aborting with error code 2000. 2. The tests run on the ports of this circuit pack are returning a no board result. 3. A **busyout** or a **release** command has no affect on the test results. 4. A **list config** command shows that the circuit pack and the ports are properly installed. **NOTE:** When hyperactivity occurs, the circuit pack is isolated from the system, and all of the trunks for this circuit pack are placed into the out of service state. The system will try to restore the circuit pack within 15 minutes. When no faults are detected for 15 minutes, the DS1 interface circuit pack is restored to normal operation. All of the trunks for the DS1 interface circuit pack are then returned to the in service state. Hyperactivity is often caused by the associated facility. In such a case, faults (such as slips, misframes, or blue alarms) would be entered in the error log. In addition, many hardware errors would be logged against the associated trunk circuits. If the facility is OK and the error occurs again after 15 minutes, escalate this problem.
	FAIL	The DS1 interface circuit pack detected a yellow alarm sent by the remote DS1 endpoint. An out of frame condition occurred at the DS1 endpoint.
1	FAIL	The DS1 Interface circuit pack detects a Remote Multiframe Alarm sent by the remote DS1 endpoint. An out-of-frame condition occurs on the remote DS1 endpoint.

Continued on next page

Table 10-238. TEST #141 Yellow Alarm Inquiry Test — *Continued*

Error Code	Test Result	Description/Recommendation
2	FAIL	The DS1 Interface circuit pack is reporting a yellow F5 State alarm. There is a fault in the user-network interface from the user (PBX) to the network. 1. Verify that both endpoints of the DS1 link are administered using the same signaling mode, framing mode, and line coding. Likewise, verify that any intermediate CSUs are administered correctly. 2. If the DS1 interface circuit pack connects to a T1 facility, call the vendor of the T1 carrier to diagnose the remote DS1 endpoint. If the DS1 interface circuit pack connects directly to a switch, call the system technician of the remote switch to diagnose the DS1 endpoint. 3. Check the physical connectivity of the DS1 pack and of the cable. 4. If this continues to fail, escalate this problem.
	PASS	No Yellow alarm nor Remote Multiframe Alarm nor F5 State Alarm is received from the remote DS1 endpoint.
0	NO BOARD	The test could not relate the internal ID to the port (no board). This could be due to incorrect translations, no board is inserted, an incorrect board is inserted, or an insane board is inserted. 1. Check to ensure that the board translations are correct. Use the **add ds1 UUCSS** command to administer the DS1 interface if it is not already administered. 2. If board was already administered correctly, check the error log to determine if the board is hyperactive. If this is the case, the board is shut down. Reseating the board will re-initialize the board. 3. If the board was found to be correctly inserted in step 1, issue the **busyout board** command. 4. Issue the **reset board** command. 5. Issue the **release busy board** command. 6. Issue the **test board long** command. This should re-establish the linkage between the internal ID and the port.

Major Alarm Inquiry Test (#142)

The Major alarm raised by a DS1 Interface circuit pack indicates that the average bit error rate on the DS1 facility is greater than 1/1000. The Major Alarm Inquiry Test is used to determine that the received DS1 bit error rate is greater than 1/1000. When D4 framing mode is selected, the DS1 Interface circuit pack takes 16 seconds to recognize and report a Major alarm and 16 seconds to recognize and report that a Major alarm condition is cleared. If ESF framing mode is selected, the DS1 Interface circuit pack takes 10 seconds to recognize and report a Major alarm and 10 seconds to recognize and report that a Major alarm condition is cleared.

When the DS1 Interface circuit pack detects a Major alarm, it will send a MAJOR-ALARM message to the maintenance software. After the maintenance software receives a MAJOR-ALARM message, the Major Alarm Inquiry Test is initiated to confirm the Major alarm on the DS1 Interface circuit pack. The Inquiry Test will be run every 10 minutes until the Major alarm is cleared. The maintenance software places all trunks on the circuit pack in the out-of-service state if the Major alarm persists for more than 20 minutes.

When the Major alarm is cleared, the maintenance software restores all trunks on the circuit pack to their previous service state before a Major alarm occurs.

Table 10-239. TEST #142 Major Alarm Inquiry Test

Error Code	Test Result	Description/Recommendation
	ABORT	Internal system error
2100	ABORT	Could not allocate the necessary system resources to run this test. 1. Retry the command at 1-minute intervals a maximum of 5 times.
2000	ABORT	Response to the test was not received within the allowable time period. This may be due to hyperactivity. Error type 1538 in the error log indicates hyperactivity. The hyperactive circuit pack is out of service and one or more of the following symptoms may be exhibited. 1. The DS1-BD tests (such as test 138 and test 139) are aborting with error code 2000. 2. The tests run on the ports of this circuit pack are returning a no board result. 3. A **busyout** or a **release** command has no affect on the test results. 4. A **list config** command shows that the circuit pack and the ports are properly installed. **NOTE:** When hyperactivity occurs, the circuit pack is isolated from the system, and all of the trunks for this circuit pack are placed into the out of service state. The system will try to restore the circuit pack within 15 minutes. When no faults are detected for 15 minutes, the DS1 interface circuit pack is restored to normal operation. All of the trunks for the DS1 interface circuit pack are then returned to the in service state. Hyperactivity is often caused by the associated facility. In such a case, faults (such as slips, misframes, or blue alarms) would be entered in the error log. In addition, many hardware errors would be logged against the associated trunk circuits. If the facility is OK and the error occurs again after 15 minutes, escalate this problem.

Continued on next page

Table 10-239. TEST #142 Major Alarm Inquiry Test — *Continued*

Error Code	Test Result	Description/Recommendation
	FAIL	The DS1 Interface circuit pack detects a Major alarm. The DS1 bit error rate is greater than 1/1000. 1. The performance of DS1 link between DS1 Interface circuit pack and remote DS1 endpoint is very poor. If the DS1 Interface circuit pack is TN767, enter **list measurement ds1-log UUCSS** command to read the error seconds measurement. 2. Verify that both endpoints of the DS1 link are administered using the same signaling mode, framing mode, and line coding. 3. If the DS1 interface circuit pack connects to a T1 facility, call the vendor of the T1 carrier to diagnose the remote DS1 endpoint. If the DS1 interface circuit pack connects directly to a switch, call the system technician of the remote switch to diagnose the DS1 endpoint. 4. Check the physical connectivity of the DS1 pack and of the cable. 5. Replace the local DS1 interface circuit pack, and repeat the test.
	PASS	No Major alarm is detected in DS1 Interface circuit pack.
0	NO BOARD	The test could not relate the internal ID to the port (no board). This could be due to incorrect translations, no board is inserted, an incorrect board is inserted, or an insane board is inserted. 1. Check to ensure that the board translations are correct. Use the **add ds1 UUCSS** command to administer the DS1 interface if it is not already administered. 2. If board was already administered correctly, check the error log to determine if the board is hyperactive. If this is the case, the board is shut down. Reseating the board will re-initialize the board. 3. If the board was found to be correctly inserted in step 1, issue the **busyout board** command. 4. Issue the **reset board** command. 5. Issue the **release busy board** command. 6. Issue the **test board long** command. This should re-establish the link between the internal ID and the port.

Minor Alarm Inquiry Test (#143)

The Minor alarm raised by a DS1 Interface circuit pack indicates that the average bit error rate on the DS1 facility is greater than 1/1,000,000, but less than 1/1000. The Minor Alarm Inquiry Test is used to determine that the received DS1 bit error rate is greater than 1/1,000,000 and less than 1/1000. When D4 framing mode is selected, the DS1 Interface circuit pack takes 41 minutes to recognize and report a Minor alarm and 41 minutes to recognize and report that a Minor alarm condition is cleared. If ESF framing mode is selected, the DS1 Interface circuit pack takes 10 minutes to recognize and report a Minor alarm and 10 minutes to recognize and report that a Minor alarm condition is cleared.

When the DS1 Interface circuit pack detects a Minor alarm condition, it will send a MINOR-ALARM message to the maintenance software. After the maintenance software receives a MINOR-ALARM message, the Minor Alarm Inquiry Test is initiated to confirm the Minor alarm. All trunks on the circuit pack are kept in the in-service state after the Minor alarm is confirmed. The Minor Alarm Inquiry Test is run every 10 minutes until the Minor alarm is cleared.

Table 10-240. TEST #143 Minor Alarm Inquiry Test

Error Code	Test Result	Description/Recommendation
	ABORT	Internal system error
2100	ABORT	Could not allocate the necessary system resources to run this test. 1. Retry the command at 1-minute intervals a maximum of 5 times.

Continued on next page

Table 10-240. TEST #143 Minor Alarm Inquiry Test — *Continued*

Error Code	Test Result	Description/Recommendation
2000	ABORT	Response to the test was not received within the allowable time period. This may be due to hyperactivity. Error type 1538 in the error log indicates hyperactivity. The hyperactive circuit pack is out of service and one or more of the following symptoms may be exhibited. 1. The DS1-BD tests (such as test 138 and test 139) are aborting with error code 2000. 2. The tests run on the ports of this circuit pack are returning a no board result. 3. A **busyout** or a **release** command has no affect on the test results. 4. A **list config** command shows that the circuit pack and the ports are properly installed. **NOTE:** When hyperactivity occurs, the circuit pack is isolated from the system, and all of the trunks for this circuit pack are placed into the out of service state. The system will try to restore the circuit pack within 15 minutes. When no faults are detected for 15 minutes, the DS1 interface circuit pack is restored to normal operation. All of the trunks for the DS1 interface circuit pack are then returned to the in service state. Hyperactivity is often caused by the associated facility. In such a case, faults (such as slips, misframes, or blue alarms) would be entered in the error log. In addition, many hardware errors would be logged against the associated trunk circuits. If the facility is OK and the error occurs again after 15 minutes, escalate this problem.

Continued on next page

Table 10-240. TEST #143 Minor Alarm Inquiry Test — *Continued*

Error Code	Test Result	Description/Recommendation
	FAIL	The DS1 Interface circuit pack detects a Minor alarm. The DS1 bit error rate is greater than 1/1,000,000 and less than 1/1000. 1. The performance of DS1 link between DS1 Interface circuit pack and remote DS1 endpoint is poor. If DS1 Interface circuit pack is TN767, enter **list measurement ds1-log UUCSS** command to read the error seconds measurement. 2. Verify that both endpoints of the DS1 link are administered using the same signaling mode, framing mode, and line coding. 3. If the DS1 interface circuit pack connects to a T1 facility, call the vendor of the T1 carrier to diagnose the remote DS1 endpoint. If the DS1interface circuit pack connects directly to a switch, call the system technician of the remote switch to diagnose the DS1 endpoint. 4. Check the physical connection of the DS1 pack and of the cable. 5. If this continues to fail, escalate this problem.
	PASS	No Minor alarm is detected in DS1 Interface circuit pack.
0	NO BOARD	The test could not relate the internal ID to the port (no board). This could be due to incorrect translations, no board is inserted, an incorrect board is inserted, or an insane board is inserted. 1. Check to ensure that the board translations are correct. Use the **add ds1 UUCSS** command to administer the DS1 interface if it is not already administered. 2. If board was already administered correctly, check the error log to determine if the board is hyperactive. If this is the case, the board is shut down. Reseating the board will re-initialize the board. 3. If the board was found to be correctly inserted in step 1, issue the **busyout board** command. 4. Issue the **reset board** command. 5. Issue the **release busy board** command. 6. Issue the **test board long** command. This should re-establish the link between the internal ID and the port.

Slip Alarm Inquiry Test (144)

Slips occur when transmitter and receiver are not running at precisely the same clock rate. The DS1 Interface circuit pack can detect both positive and negative slips on the DS1 facility. The Slip Alarm Inquiry Test is used to acquire the total number of slips occurred on a DS1 link.

When the DS1 Interface circuit pack detects a slip condition, the circuit pack will increase the on-board slip counter by 1. A SLIP-COUNT message is spontaneously sent to the system software after the counter reaches a threshold (for example, 88). When the maintenance software receives the SLIP-COUNT message, the Slip Alarm Inquiry Test is initiated to query the slip counters on DS1 Interface circuit pack and total the slip counts in the maintenance software.

If the count of slips is over the threshold, a Minor alarm is raised against the DS1 Interface circuit pack. All trunks of the DS1 Interface circuit pack are still in the in-service state. If the DS1 Interface circuit pack is used to supply the system synchronization source, the MINOR alarm will initiate a synchronization source switch. See “TDM-BUS” and “SYNC (Synchronization)” for details.

Table 10-241. TEST #144 Slip Alarm Inquiry Test

Error Code	Test Result	Description/Recommendation
	ABORT	Internal system error
2100	ABORT	Could not allocate the necessary system resources to run this test. 1. Retry the command at 1-minute intervals a maximum of 5 times.

Continued on next page

Table 10-241. TEST #144 Slip Alarm Inquiry Test — *Continued*

Error Code	Test Result	Description/Recommendation
2000	ABORT	Response to the test was not received within the allowable time period. This may be due to hyperactivity. Error type 1538 in the error log indicates hyperactivity. The hyperactive circuit pack is out of service and one or more of the following symptoms may be exhibited. 1. The DS1-BD tests (such as test 138 and test 139) are aborting with error code 2000. 2. The tests run on the ports of this circuit pack are returning a no board result. 3. A **busyout** or a **release** command has no affect on the test results. 4. A **list config** command shows that the circuit pack and the ports are properly installed. **NOTE:** When hyperactivity occurs, the circuit pack is isolated from the system, and all of the trunks for this circuit pack are placed into the out of service state. The system will try to restore the circuit pack within 15 minutes. When no faults are detected for 15 minutes, the DS1 interface circuit pack is restored to normal operation. All of the trunks for the DS1 interface circuit pack are then returned to the in service state. Hyperactivity is often caused by the associated facility. In such a case, faults (such as slips, misframes, or blue alarms) would be entered in the error log. In addition, many hardware errors would be logged against the associated trunk circuits. If the facility is OK and the error occurs again after 15 minutes, escalate this problem.

Continued on next page

Table 10-241. TEST #144 Slip Alarm Inquiry Test — *Continued*

Error Code	Test Result	Description/Recommendation
1 to 88	FAIL	The DS1 interface circuit pack detected a slip alarm. The error code equals the number of slips detected by the DS1 interface circuit pack since the last slip alarm inquiry test. 1. Retry the command at 1-minute intervals a maximum of 5 times. 2. If the DS1 interface circuit pack is a TN767, enter the **list measurement ds1-log UUCSS** command to read the error seconds measurement. 3. Verify that both endpoints and all intermediate equipment of the DS1 link are administered using the same signaling mode, framing mode, and line coding. 4. If the DS1 interface circuit pack connects to a T1 facility, call the vendor of the T1 carrier to diagnose the remote DS1 endpoint. If the DS1 interface circuit pack connects directly to a switch, call the system technician of the remote switch to diagnose the DS1 endpoint. 5. Check the active alarm and error logs for recent alarms and errors against the synchronization (SYNC). Follow the suggested repair procedure for these errors. 6. Check the physical connectivity of the DS1 pack and of the cable. 7. If this continues to fail, escalate this problem.

Continued on next page

Table 10-241. TEST #144 Slip Alarm Inquiry Test — *Continued*

Error Code	Test Result	Description/Recommendation
	PASS	No Slip alarm is detected on the DS1 Interface circuit pack.
0	NO BOARD	The test could not relate the internal ID to the port (no board). This could be due to incorrect translations, no board is inserted, an incorrect board is inserted, or an insane board is inserted. 1. Check to ensure that the board translations are correct. Use the **add ds1 UUCSS** command to administer the DS1 interface if it is not already administered. 2. If board was already administered correctly, check the error log to determine if the board is hyperactive. If this is the case, the board is shut down. Reseating the board will re-initialize the board. 3. If the board was found to be correctly inserted in step 1, issue the **busyout board** command. 4. Issue the **reset board** command. 5. Issue the **release busy board** command. 6. Issue the **test board long** command. This should re-establish the link between the internal ID and the port.

Misframe Alarm Inquiry Test (#145)

Misframe Alarm indicates that framing bits observed on a DS1 Interface circuit pack are in error. Misframe Alarm Inquiry Test queries the total number of misframes that occurred on a DS1 Interface circuit pack since the last inquiry.

When the DS1 Interface circuit pack detects a misframe error, it will increase its misframe counter by 1. If the counter reaches the threshold, a MISFRAME-COUNT message is automatically sent to the switch maintenance software. After the maintenance software receives the MISFRAME-COUNT message, the Misframe Alarm Inquiry Test is initiated to collect the misframe counts from the DS1 Interface circuit pack.

When the threshold of misframes is reached, if the DS1 Interface circuit pack is supplying the system synchronization source, then a switching synchronization source message is sent to the TDM Bus Clock. See TDM-BUS (TDM Bus) Maintenance documentation for details. A Minor alarm against the DS1 Interface circuit pack is raised, but all trunks of the DS1 Interface circuit pack are still in the in-service state.

Table 10-242. TEST #145 Misframe Alarm Inquiry Test

Error Code	Test Result	Description/Recommendation
	ABORT	Internal system error
2100	ABORT	Could not allocate the necessary system resources to run this test. 1. Retry the command at 1-minute intervals a maximum of 5 times.
2000	ABORT	Response to the test was not received within the allowable time period. This may be due to hyperactivity. Error type 1538 in the error log indicates hyperactivity. The hyperactive circuit pack is out of service and one or more of the following symptoms may appear. 1. The DS1-BD tests (such as test 138 and test 139) are aborting with error code 2000. 2. The tests run on the ports of this circuit pack are returning a no board result. 3. **busyout** and **release** have no affect on the test results. 4. A **list config** command shows that the circuit pack and the ports are properly installed. **NOTE:** When hyperactivity occurs, the circuit pack is isolated from the system, and all of the trunks for this circuit pack are placed into the out of service state. The system will try to restore the circuit pack within 15 minutes. When no faults are detected for 15 minutes, the DS1 interface circuit pack is restored to normal operation. All of the trunks for the DS1 interface circuit pack are then returned to the in service state. Hyperactivity is often caused by the associated facility. In such a case, faults (such as slips, misframes, or blue alarms) would be entered in the error log. In addition, many hardware errors would be logged against the associated trunk circuits. If the facility is OK and the error occurs again after 15 minutes, escalate this problem.

Continued on next page

Table 10-242. TEST #145 Misframe Alarm Inquiry Test — *Continued*

Error Code	Test Result	Description/Recommendation
ANY	FAIL	The test failed because the DS1 interface circuit pack detected errors in the received framing bits pattern. The error code equals the number of misframes detected by the DS1 interface circuit pack since the last misframe alarm inquiry test. Major bit and minor bit error rate (error types 2561 and 2817) error logs often accompany misframe alarms. Clearing the cause of these error logs may clear the misframes which are occurring. 1. Retry the command at 1-minute intervals a maximum of 5 times. 2. If the DS1 interface circuit pack is a TN767, enter the **list measurement ds1-log UUCSS** command to read the error seconds measurement. 3. Verify that both endpoints and all intermediate equipment of the DS1 link are administered using the same signaling mode, framing mode, and line coding. 4. If the DS1 interface circuit pack connects to a T1 facility, call the vendor of the T1 carrier to diagnose the remote DS1 endpoint. If the DS1 interface circuit pack connects directly to a switch, call the system technician of the remote switch to diagnose the DS1 endpoint. 5. Check the active alarm and error logs for recent alarms and errors against the synchronization (SYNC). Follow the suggested repair procedure for these errors. 6. Check the physical connection of the DS1 pack and of the cable. 7. If this continues to fail, escalate this problem.
	PASS	No Misframe alarm is detected on the DS1 Interface circuit pack.

Continued on next page

Table 10-242. TEST #145 Misframe Alarm Inquiry Test — *Continued*

Error Code	Test Result	Description/Recommendation
0	NO BOARD	The test could not relate the internal ID to the port (no board). This could be due to incorrect translations, no board is inserted, an incorrect board is inserted, or an insane board is inserted. 1. Check to ensure that the board translations are correct. Use **add ds1 UUCSS** to administer the DS1 interface if it is not already administered. 2. If board was already administered correctly, check the error log to determine if the board is hyperactive. If this is the case, the board is shut down. Reseating the board will re-initialize the board. 3. If the board was found to be correctly inserted in step 1, issue the **busyout board** command. 4. Issue the **reset board** command. 5. Issue the **release busy board** command. 6. Issue the **test board long** command. This should re-establish the link between the internal ID and the port.

Translation Update Test (#146)

The Translation Update Test sends the circuit-pack-level information specified by System Administration to the DS1 Interface circuit pack. Translation includes the following data administered for a DS1 Interface circuit pack (see output of **display ds1 UUCSS** command): DS1 Link Length between two DS1 endpoints, Synchronization Source Control, All Zero Suppression, Framing Mode, Signaling Mode, Time Slot Number of 697-Hz Tone, Time Slot Number of 700-Hz Tone, etc.

If a TN767E or later DS1 circuit pack is combined with a 120A CSU Module or a T1 Sync Splitter to form an Integrated CSU Module, this test will also send the administration for this Integrated CSU to the circuit pack to assure the board's translations are correct. The administration of the CSU Module is done using the DS1 circuit pack administration form. Translation for the CSU Module includes the following data: Transmit LBO, Receive ALBO, Supply CPE Loopback Jack Power?, and so forth.

Table 10-243. TEST #146 Translation Update Test

Error Code	Test Result	Description/Recommendation
	ABORT	Internal system error 1. Retry the command at 1-minute intervals a maximum of 5 times.
	FAIL	Internal system software error. 1. Enter the **display ds1 UUCSS** command to verify the DS1 Interface circuit pack translation.
	PASS	Translation data has been downloaded to the DS1 Interface circuit pack successfully.
0	NO BOARD	The test could not relate the internal ID to the port (no board). This could be due to incorrect translations, no board is inserted, an incorrect board is inserted, or an insane board is inserted. 1. Check to ensure that the board translations are correct. Use the **add ds1 UUCSS** command to administer the DS1 interface if it is not already administered. 2. If board was already administered correctly, check the error log to determine if the board is hyperactive. If this is the case, the board is shut down. Reseating the board will re-initialize the board. 3. If the board was found to be correctly inserted in step 1, issue the **busyout board** command. 4. Issue the **reset board** command. 5. Issue the **release busy board** command. 6. Issue the **test board long** command. This should re-establish the link between the internal ID and the port.

DS1 Board Loopback Test (#1209)

This test is destructive.

The DS1 Board Loopback (BLB) Test causes a loopback at the TN767E DS1 board edge and tests DS1 board internal circuitry.

The test is destructive and can only be initiated by a system technician demanded ***t*est ds1-loop UUCSS ds1/csu-loopback-tests** command.

All trunks or ports on the DS1 Interface circuit pack must be busied out via the system technician **busyout board** command before running the BLB Test.

When the BLB Test is initiated, maintenance software sends an appropriate message to the TN767E DS1 Interface circuit pack to start the test. The board will set up the BLB loopback, transmit a test pattern, and verify that the pattern is received unaltered through the loopback. If the transmitted and received pattern is different, the test fails.

When the test is complete, all trunks or ports on the TN767E DS1 Interface circuit pack are restored to the in-service state after the **release board** command is entered

Table 10-244. TEST #1209 DS1 Board Loopback Test

Error Code	Test Result	Description/Recommendation
	ABORT	Internal system error 1. Retry ***test* ds1-loop UUCSS ds1/csu-loopback-tests** at 1-minute intervals a maximum of 5 times.
1005	ABORT	DS1 Board Loopback Test cannot be executed in the current configuration. To run this Test, the TN767E or later suffix DS1 must be administered for 24-channel operation. The "Bit Rate" field on the DS1 circuit pack administration form must be set to "1.544" for 24-channel operation.
1015	ABORT	Ports on the DS1 Interface circuit pack have not been busied out to out-of-service. 1. Enter **busyout board UUCSS** to put all trunks or ports of the DS1 Interface circuit pack into the out-of-service state. 2. Retry the command.
1039	ABORT	The DS1 Interface circuit pack is providing timing for the system. Executing this test could cause major system disruption. If the DS1 Interface circuit pack needs to be tested, set the synchronization reference to another DS1 Interface circuit pack or to the Tone-Clock circuit pack via the following command sequence: 1. Issue **disable synchronization-switch**. 2. Issue **set synchronization UUCSS**. 3. Issue **enable synchronization-switch**.

Continued on next page

Table 10-244. TEST #1209 DS1 Board Loopback Test — *Continued*

Error Code	Test Result	Description/Recommendation
1950	ABORT	Another loopback/span test is already executing on the DS1 board or the board is in a network requested loopback mode (Line loopback or Payload loopback). The hardware error log will indicate whether a Customer Loopback Jack Test, Far CSU Loopback Test, or the One-Way Span Test is executing or if the board is in line loopback or payload loopback mode. Only one long-duration loopback/span test can be active at a given time. Thus, if a loopback/span test is already active, that test must be terminated via the *test ds1-loop UUCSS end-loopback/span-test* command in order to execute this test.
	ABORT	Internal system error
2100	ABORT	Could not allocate the necessary system resources to run this test. 1. Retry the command at 1-minute intervals for a maximum of 5 times.

Continued on next page

Table 10-244. TEST #1209 DS1 Board Loopback Test — *Continued*

Error Code	Test Result	Description/Recommendation
2000	ABORT	Response to the test was not received within the allowable time period. This may be due to hyperactivity. Error type 1538 in the error log indicates hyperactivity. The hyperactive circuit pack is out of service and one or more of the following symptoms may be exhibited. 1. The DS1-BD tests (such as test 138 and test 139) are aborting with error code 2000. 2. The tests run on the ports of this circuit pack are returning a no board result. 3. **busyout** and **release** have no affect on the test results. 4. **list config** shows that the circuit pack and the ports are properly installed. **NOTE:** When hyperactivity occurs, the circuit pack is isolated from the system, and all of the trunks for this circuit pack are placed into the out of service state. The system will try to restore the circuit pack within 15 minutes. When no faults are detected for 15 minutes, the DS1 interface circuit pack is restored to normal operation. All of the trunks for the DS1 interface circuit pack are then returned to the in service state. Hyperactivity is often caused by the associated facility. In such a case, faults (such as slips, misframes, or blue alarms) would be entered in the error log. In addition, many hardware errors would be logged against the associated trunk circuits. If the facility is OK and the error occurs again after 15 minutes, escalate this problem.

Continued on next page

Table 10-244. TEST #1209 DS1 Board Loopback Test — *Continued*

Error Code	Test Result	Description/Recommendation
	FAIL	DS1 Interface circuit pack failed the DS1 Board Loopback Test. 1. Retry **test ds1-loop UUCSS ds1/csu-loopback-tests**. 2. If the BLB test continues to fail, then replace the DS1 circuit pack.
	PASS	The BLB test executed successfully. The test pattern was transmitted and received successfully up to the TN767E DS1 board edge.
0	NO BOARD	The test could not relate the internal ID to the port (no board). This could be due to incorrect translations, no board is inserted, an incorrect board is inserted, or an insane board is inserted. 1. Check to ensure that the board translations are correct. Use the **add ds1 UUCSS** command to administer the DS1 interface if it is not already administered. 2. If board was already administered correctly, check the error log to determine if the board is hyperactive. If this is the case, the board is shut down. Reseating the board will re-initialize the board. 3. If the board was found to be correctly inserted in step 1, issue the **busyout board** command. 4. Issue the **reset board** command. 5. Issue the **release busy board** command. 6. Issue the **test board long** command. This should re-establish the link between the internal ID and the port.

CSU Equipment Loopback Test (#1210)

This test is destructive.

The CSU Equipment Loopback (ELB) Test causes a loopback at the near-edge of the local 120A CSU Module or T1 Sync Splitter, and tests the connection from the TN767E DS1 board to the CSU Module/T1 Sync Splitter (DS1 board edge interconnecting cable, and CSU Module/T1 Sync Splitter edge). This test will only be performed if the 120A CSU Module/T1 Sync Splitter is present, administered, and connected to a 1.544Mbps TN767E DS1 circuit pack on the back of the port carrier.

The test is destructive and can only be initiated by a system technician demanded **test ds1-loop UUCSS ds1/csu-loopback-tests** command.

All trunks or ports on the DS1 Interface circuit pack must be busied out via the system technician **busyout board** command before running the ELB Test.

When the ELB Test is initiated, maintenance software sends an appropriate message to the TN767E DS1 Interface circuit pack to start the test. The board sets up the ELB loopback, transmit a test pattern, and verify that the pattern is received unaltered through the loopback. If the transmitted and received pattern is different, the test fails.

In addition, the DS1 circuit pack hardware applies a DC current while the test is running in order to detect any broken wires which may not be detected by the loopback pattern.

When the test is complete, all trunks or ports on the TN767E DS1 Interface circuit pack are restored to the in-service state after the **release board** command is entered.

Table 10-245. TEST #1210 CSU Equipment Loopback Test

Error Code	Test Result	Description/Recommendation
	ABORT	Internal system error 1. Retry *t***est ds1-loop UUCSS ds1/csu-loopback-tests** at 1-minute intervals a maximum of 5 times.
1005	ABORT	CSU Equipment Loopback Test cannot be executed in the current configuration. To run this test, the *Near-End CSU Type* field on the DS1 circuit pack administration form must be set to *integrated* and the “Bit Rate” field must be set to “1.544” (24-channel operation). 1. Use the **change ds1 UUCSS** command to set the *Near-End CSU Type* field on the DS1 circuit pack administration form to *integrated*, and/or change the “Bit Rate” field to “1.544” if the board is to be used in the 24-channel configuration. 2. Retry **test ds1-loop UUCSS ds1/csu-loopback-tests**.
1015	ABORT	Ports on the DS1 Interface circuit pack have not been busied out to out-of-service. 1. Enter the **busyout board UUCSS** command to put all trunks or ports of the DS1 Interface circuit pack into the out-of-service state. 2. Retry the command.

Continued on next page

Table 10-245. TEST #1210 CSU Equipment Loopback Test — *Continued*

Error Code	Test Result	Description/Recommendation
1039	ABORT	The DS1 Interface circuit pack is providing timing for the system. Executing this test could cause major system disruption. If the DS1 Interface circuit pack needs to be tested, set the synchronization reference to another DS1 Interface circuit pack or to the Tone-Clock circuit pack via the following command sequence: 1. Issue the **disable synchronization-switch** command. 2. Next, issue the **set synchronization UUCSS** command. 3. Lastly, issue the **enable synchronization-switch** command.
1950	ABORT	Another loopback/span test is already executing on the DS1 board or the board is in a network requested loopback mode (Line loopback or Payload loopback). The hardware error log will indicate whether a Customer Loopback Jack Test, Far CSU Loopback Test, or the One-Way Span Test is executing or if the board is in line loopback or payload loopback mode. Only one long-duration loopback/span test can be active at a given time. Thus, if a loopback/span test is already active, that test must be terminated via the **test ds1-loop UUCSS end-loopback/span-test** command in order to execute this test.
1951	ABORT	The CSU Equipment Loopback Test could not be executed because the 120A CSU Module/T1 Sync Splitter was not physically installed. Physically connect the 120A CSU Module/T1 Sync Splitter to the TN767E board on the back of the port carrier.
	ABORT	Internal system error
2100	ABORT	Could not allocate the necessary system resources to run this test. 1. Retry the command at 1-minute intervals a maximum of 5 times.

Continued on next page

Table 10-245. TEST #1210 CSU Equipment Loopback Test — *Continued*

Error Code	Test Result	Description/Recommendation
2000	ABORT	Response to the test was not received within the allowable time period. This may be due to hyperactivity. Error type 1538 in the error log indicates hyperactivity. The hyperactive circuit pack is out of service and one or more of the following symptoms may be exhibited. 1. The DS1-BD tests (such as test 138 and test 139) are aborting with error code 2000. 2. The tests run on the ports of this circuit pack are returning a no board result. 3. A **busyout** or a **release** command has no affect on the test results. 4. A **list config** command shows that the circuit pack and the ports are properly installed. **NOTE:** When hyperactivity occurs, the circuit pack is isolated from the system, and all of the trunks for this circuit pack are placed into the out of service state. The system will try to restore the circuit pack within 15 minutes. When no faults are detected for 15 minutes, the DS1 interface circuit pack is restored to normal operation. All of the trunks for the DS1 interface circuit pack are then returned to the in service state. Hyperactivity is often caused by the associated facility. In such a case, faults (such as slips, misframes, or blue alarms) would be entered in the error log. In addition, many hardware errors would be logged against the associated trunk circuits. If the facility is OK and the error occurs again after 15 minutes, escalate this problem.

Continued on next page

Table 10-245. TEST #1210 CSU Equipment Loopback Test — *Continued*

Error Code	Test Result	Description/Recommendation
	FAIL	DS1 Interface circuit pack failed the CSU Equipment Loopback Test. 1. Retry **test ds1-loop UUCSS ds1/csu-loopback-tests**. 2. If the ELB test continues to fail, then either the TN767E board, the CSU Module/T1 Sync Splitter, or the I/O cable between the backplane and the 120A1 CSU Module or the 401A T1 Sync Splitter (or any combination thereof) has failed. Attempt to isolate the problem to one of these areas. Replace the CSU Module/T1 Sync Splitter and running **test ds1-loop UUCSS ds1/csu-loopback-tests** again. 3. If the ELB test continues to fail, then replace the TN767E board and run **test ds1-loop UUCSS ds1/csu-loopback-tests** again. 4. If the ELB test continues to fail, the problem could be in the I/O cable between the backplane and the 120A1 CSU Module or the 401A T1 Sync Splitter.
	PASS	The ELB test executed successfully. The test pattern was transmitted and received successfully over the connection from the TN767E DS1 board to the near-edge of the 120A1 CSU Module/T1 Sync Splitter.
0	NO BOARD	The test could not relate the internal ID to the port (no board). This could be due to incorrect translations, no board is inserted, an incorrect board is inserted, or an insane board is inserted. 1. Check to ensure that the board translations are correct. Use the **add ds1 UUCSS** command to administer the DS1 interface if it is not already administered. 2. If board was already administered correctly, check the error log to determine if the board is hyperactive. If this is the case, the board is shut down. Reseating the board will re-initialize the board. 3. If the board was found to be correctly inserted in step 1, issue the **busyout board** command. 4. Issue the **reset board** command. 5. Issue the **release busy board** command. 6. Issue the **test board long** command. This should re-establish the link between the internal ID and the port.

CSU Repeater Loopback Test (#1211)

This test is destructive.

The CSU Repeater Loopback (RLB) Test causes a loopback at the far-edge of the local 120A CSU Module or T1 Sync Splitter, and tests the connection from the TN767E DS1 board to and including the CSU Module/T1 Sync Splitter circuitry. This test will only be performed if the 120A CSU Module/T1 Sync Splitter is present, administered, and connected to a 1.544 Mbps TN767E DS1 circuit pack on the back of the port carrier.

The test is destructive and can only be initiated by a system technician demanded **test ds1-loop UUCSS ds1/csu-loopback-tests** command.

All trunks or ports on the DS1 Interface circuit pack must be busied out via the system technician **busyout board** command before running the RLB Test.

When the RLB Test is initiated, maintenance software sends an appropriate message to the TN767E DS1 Interface circuit pack to start the test. The board will set up the RLB loopback, transmit a test pattern, and verify that the pattern is received unaltered through the loopback. If the transmitted and received pattern is different, the test fails.

In addition, the DS1 circuit pack hardware applies a DC current while the test is running in order to detect any broken wires which may not be detected by the loopback pattern.

When the test is complete, all trunks or ports on the TN767E DS1 Interface circuit pack are restored to the in-service state after the **release board** command is entered.

Table 10-246. TEST #1211 CSU Repeater Loopback Test

Error Code	Test Result	Description/Recommendation
	ABORT	Internal system error 1. Retry **test ds1-loop UUCSS ds1/csu-loopback-tests** at 1-minute intervals a maximum of 5 times.
1005	ABORT	CSU Repeater Loopback Test cannot be executed in the current configuration. To run this test, the *Near-End CSU Type* field on the DS1circuit pack administration form must be set to *integrated* and the “Bit Rate” field on the DS1 circuit pack administration form must be set to “1.544” (24-channel configuration). 1. Use the **change ds1 UUCSS** command to set the *Near-End CSU Type* field on the DS1 circuit pack administration form to *integrated*, and/or change the “Bit Rate” field to “1.544” if the board is to be used in 24-channel configuration. 2. Retry **test ds1-loop UUCSS ds1/csu-loopback-tests**.
1015	ABORT	Ports on the DS1 Interface circuit pack have not been busied out to out-of-service. 1. Enter the **busyout board UUCSS** command to put all trunks or ports of the DS1 Interface circuit pack into the out-of-service state. 2. Retry the command.
1039	ABORT	The DS1 Interface circuit pack is providing timing for the system. Executing this test could cause major system disruption. If the DS1 Interface circuit pack needs to be tested, set the synchronization reference to another DS1 Interface circuit pack or to the Tone-Clock circuit pack via the following command sequence: 1. Issue the **disable synchronization-switch** command. 2. Next, issue the **set synchronization UUCSS** command. 3. Lastly, issue the **enable synchronization-switch** command.
1950	ABORT	Another loopback/span test is already executing on the DS1 board or the board is in a network requested loopback mode (Line loopback or Payload loopback). The hardware error log indicates whether a Customer Loopback Jack Test, Far CSU Loopback Test, or the One-Way Span Test is executing or if the board is in line loopback or payload loopback mode. Only one long-duration loopback/span test can be active at a given time. Thus, if a loopback/span test is already active, that test must be terminated via the **test ds1-loop UUCSS end-loopback/span-test** command in order to execute this test.

Continued on next page

Table 10-246. TEST #1211 CSU Repeater Loopback Test — *Continued*

Error Code	Test Result	Description/Recommendation
1951	ABORT	The CSU Repeater Loopback Test could not be executed because the 120A CSU Module/T1 Sync Splitter was not physically installed. Physically connect the 120A1 CSU Module/T1 Sync Splitter to the TN767E board on the back of the port carrier.
	ABORT	Internal system error
2100	ABORT	Could not allocate the necessary system resources to run this test. 1. Retry the command at 1-minute intervals a maximum of 5 times.
2000	ABORT	Response to the test was not received within the allowable time period. This may be due to hyperactivity. Error type 1538 in the error log indicates hyperactivity. The hyperactive circuit pack is out of service and one or more of the following symptoms may be exhibited. 1. The DS1-BD tests (such as test 138 and test 139) are aborting with error code 2000. 2. The tests run on the ports of this circuit pack are returning a no board result. 3. A **busyout** or a **release** command has no affect on the test results. 4. A **list config** command shows that the circuit pack and the ports are properly installed. **NOTE:** When hyperactivity occurs, the circuit pack is isolated from the system, and all of the trunks for this circuit pack are placed into the out of service state. The system will try to restore the circuit pack within 15 minutes. When no faults are detected for 15 minutes, the DS1 interface circuit pack is restored to normal operation. All of the trunks for the DS1 interface circuit pack are then returned to the in service state. Hyperactivity is often caused by the associated facility. In such a case, faults (such as slips, misframes, or blue alarms) would be entered in the error log. In addition, many hardware errors would be logged against the associated trunk circuits. If the facility is OK and the error occurs again after 15 minutes, escalate this problem.

Continued on next page

Table 10-246. TEST #1211 CSU Repeater Loopback Test — *Continued*

Error Code	Test Result	Description/Recommendation
	FAIL	DS1 Interface circuit pack failed the CSU Repeater Loopback Test. 1. Retry **test ds1-loop UUCSS ds1/csu-loopback-tests**. 2. If the RLB test continues to fail, and the CSU Equipment Loopback Test (#1210) passed, then replace the CSU Module/T1 Sync Splitter.
	PASS	The RLB test executed successfully. The test pattern was transmitted and received successfully over the connection from the TN767E DS1 board to the far-edge of the 120A1 CSU Module/T1 Sync Splitter.
0	NO BOARD	The test could not relate the internal ID to the port (no board). This could be due to incorrect translations, no board is inserted, an incorrect board is inserted, or an insane board is inserted. 1. Check to ensure that the board translations are correct. Use the **add ds1 UUCSS** command to administer the DS1 interface if it is not already administered. 2. If board was already administered correctly, check the error log to determine if the board is hyperactive. If this is the case, the board is shut down. Reseating the board will re-initialize the board. 3. If the board was found to be correctly inserted in step 1, issue the **busyout board** command. 4. Issue the **reset board** command. 5. Issue the **release busy board** command. 6. Issue the **test board long** command. This should re-establish the link between the internal ID and the port.

CPE Loopback Jack Test (#1212)

This test is destructive.

The CPE Loopback Jack (CLJ-LB) Test causes a loopback at the CPE Loopback Jack and tests the building wiring connection between the TN767E DS1 board and the CPE Loopback Jack.

The test is highly destructive and can only be initiated by a system technician demanded **test ds1-loop UUCSS cpe-loopback-jack-test-begin [number-of-bits bit-pattern]** command. The System technician has the choice of entering a loopback activation code on the command line or using the default code (0x47F).

All trunks or ports on the DS1 Interface circuit pack must be busied out via the system technician **busyout board** command before running the CPE Loopback Jack Test.

The CPE Loopback Jack Test has the TN767E DS1 Interface circuit pack transmit a loopback activation code to the CPE Loopback Jack, waits up to 10 seconds for return of the code to verify the loopback has been established, transmits a framed 3-in-24 test pattern, begins counting bit errors in the received test pattern, and returns a PASS result to indicate that the pattern was successfully sent. If the loopback is not established within the 10 seconds, the test returns FAIL.

The status of the CPE Loopback Jack test will be available in the hardware error log via error type 3900. Several distinct aux values will be used to give the user information of the status of the test.

The *list measurements ds1 summary* command will display the length of time the test has been running (*Test Duration* field) and number of bit errors detected (*Loopback/Span Test Bit-Error Count* field). If the test pattern is being passed through the loopback cleanly, the number of bit errors should be very low. The command will also display the type of loopback/span test executing (*Test* field), the type of pattern generated for the loopback/span test (*Pattern* field), and whether the pattern (*3-in-24 Pattern*) is synchronized (*Synchronized Field*).

To terminate the test, enter the **test ds1-loop UUCSS end-loopback/span-test** command.

Table 10-247. TEST #1212 CPE Loopback Jack Test

Error Code	Test Result	Description/Recommendation
	ABORT	Internal system error 1. Retry **test ds1-loop UUCSS cpe-loopback-jack-test-begin** at 1-minute intervals a maximum of 5 times.

Continued on next page

Table 10-247. TEST #1212 CPE Loopback Jack Test — *Continued*

Error Code	Test Result	Description/Recommendation
1005	ABORT	CPE Loopback Jack Test cannot be executed in the current configuration. To run this Test, the TN767E or later suffix DS1 must be administered for 24-channel operation. The "Bit Rate" field on the DS1 circuit pack administration form must be set to "1.544" for 24-channel operation.
1015	ABORT	Ports on the DS1 Interface circuit pack have not been busied out to out-of-service. 1. Enter the **busyout board UUCSS** command to put all trunks or ports of the DS1 Interface circuit pack into the out-of-service state. 2. Retry the command.
1039	ABORT	The DS1 Interface circuit pack is providing timing for the system. Executing this test could cause major system disruption. If the DS1 Interface circuit pack needs to be tested, set the synchronization reference to another DS1 Interface circuit pack or to the Tone-Clock circuit pack via the following command sequence: 1. Issue the **disable synchronization-switch** command. 2. Next, issue the **set synchronization UUCSS** command. 3. Lastly, issue the **enable synchronization-switch** command.
1950	ABORT	Another loopback/span test is already executing on the DS1 board or the board is in a network requested loopback mode (Line loopback or Payload loopback). The hardware error log will indicate whether a Customer Loopback Jack Test, Far CSU Loopback Test, or the One-Way Span Test is executing or if the board is in line loopback or payload loopback mode. Only one long-duration loopback/span test can be active at a given time. Thus, if a loopback/span test is already active, that test must be terminated via the *test ds1-loop UUCSS end-loopback/span-test* command in order to execute this test.
	ABORT	Internal system error
2100	ABORT	Could not allocate the necessary system resources to run this test. 1. Retry the command at 1-minute intervals for a maximum of 5 times.

Continued on next page

Table 10-247. TEST #1212 CPE Loopback Jack Test — *Continued*

Error Code	Test Result	Description/Recommendation
2000	ABORT	Response to the test was not received within the allowable time period. This may be due to hyperactivity. Error type 1538 in the error log indicates hyperactivity. The hyperactive circuit pack is out of service and one or more of the following symptoms may be exhibited. 1. The DS1-BD tests (such as test 138 and test 139) are aborting with error code 2000. 2. The tests run on the ports of this circuit pack are returning a no board result. 3. A **busyout** or a **release** command has no affect on the test results. 4. A **list config** command shows that the circuit pack and the ports are properly installed. **NOTE:** When hyperactivity occurs, the circuit pack is isolated from the system, and all of the trunks for this circuit pack are placed into the out of service state. The system will try to restore the circuit pack within 15 minutes. When no faults are detected for 15 minutes, the DS1 interface circuit pack is restored to normal operation. All of the trunks for the DS1 interface circuit pack are then returned to the in service state. Hyperactivity is often caused by the associated facility. In such a case, faults (such as slips, misframes, or blue alarms) would be entered in the error log. In addition, many hardware errors would be logged against the associated trunk circuits. If the facility is OK and the error occurs again after 15 minutes, escalate this problem.
2	FAIL	The CLJ-LB test failed because it was not set up properly. The DS1 interface pack could not successfully put the CPE loopback jack into loopback mode. 1. Rerun the **test ds1-loop UUCSS cpe-loopback-jack-test-begin** command. 2. If the test continues to fail, the problem could be with the TN767E board, the CPE loopback jack equipment, or somewhere between. Run the **test ds1-loop UUCSS ds1/csu-loopback-tests** command to determine if the loopback tests that are closer to the TN767E board are successful. If any of these tests fail, follow the maintenance strategy that is associated with the test that fails.

Continued on next page

Table 10-247. TEST #1212 CPE Loopback Jack Test — *Continued*

Error Code	Test Result	Description/Recommendation
3	FAIL	The CPE Loopback Jack Test was not set up properly. The framed 3-in-24 test pattern, generated by the DS1 Interface circuit pack and looped back through the CPE Loopback Jack, could not be detected properly by the DS1 circuit pack. 1. Retry ***test* ds1-loop UUCSS cpe-loopback-jack-test-begin**. 2. If the CPE Loopback test continues to fail, the problem could be with the TN767E board, the CPE Loopback Jack equipment, or somewhere in between. Run **test ds1-loop UUCSS ds1/csu-loopback-tests** to see if the loopback tests closer to the TN767E board are successful. If any of those loopback tests fail, follow the maintenance strategy associated with those loopbacks.
	PASS	The CPE Loopback Jack test has successfully began executing. The test will continue to run until the system technician enters the ***test* ds1-loop UUCSS end-loopback/span-test** command or the **release board UUCSS** command.
0	NO BOARD	The test could not relate the internal ID to the port (no board). This could be due to incorrect translations, no board is inserted, an incorrect board is inserted, or an insane board is inserted. 1. Check to ensure that the board translations are correct. Use the **add ds1 UUCSS** command to administer the DS1 interface if it is not already administered. 2. If board was already administered correctly, check the error log to determine if the board is hyperactive. If this is the case, the board is shut down. Reseating the board will re-initialize the board. 3. If the board was found to be correctly inserted in step 1, issue the **busyout board** command. 4. Issue the **reset board** command. 5. Issue the **release busy board** command. 6. Issue the **test board long** command. This should re-establish the link between the internal ID and the port.

Far CSU Loopback Test (#1213)

This test is destructive.

The Far CSU Loopback (R-LLB) Test causes a loopback at the far-end CSU and tests all circuitry and facilities from the local TN767E DS1 board to the far-end CSU.

The test is destructive and can only be initiated by a system technician demanded **test ds1-loop UUCSS far-csu-loopback-test-begin** command.

All trunks or ports on the DS1 Interface circuit pack must be busied out via the system technician **busyout board** command before running the Far CSU Loopback Test.

If the far-end CSU is not a 120A CSU Module or a 401A T1 Sync Splitter, and the DS1 is administered for ami-zcs line coding, one's density protection must be disabled on the CSU during the test due to the large number of zero's in the 3-in-24 test pattern.

The Far CSU Loopback Test has the TN767E DS1 Interface circuit pack transmit a loopback activation code to the remote CSU, waits up to 15 seconds for return of the code to verify the loopback has been established, transmits a framed 3-in-24 test pattern, begins counting bit errors in the received test pattern, and returns a PASS result. If the loopback is not established within the 15 seconds, the test fails.

The status of the Far CSU Loopback test will be available in the hardware error log via error type 3901. Several distinct aux values will be used to give the user information of the status of the test.

The *list measurements ds1 summary* command will display the length of time the test has been running (*Test Duration* field) and number of bit errors detected (*Loopback/Span Test Bit-Error Count* field). If the test pattern is being passed through the loopback cleanly, the number of bit errors should be very low. The command will also display the type of loopback/span test executing (*Test* field), the type of pattern generated for the loopback/span test (*Pattern* field), and whether the pattern (*i.e. 3-in-24 Pattern*) is synchronized (*Synchronized* field).

To terminate the test, enter *t***est ds1-loop UUCSS end-loopback/span-test** or the **release board** command. Using the **release board** command will restore all trunks or ports on the TN767E DS1 Interface circuit pack to the in-service state.

Table 10-248. TEST #1213 Far CSU Loopback Test

Error Code	Test Result	Description/Recommendation
	ABORT	Internal system error 1. Retry *t***est ds1-loop UUCSS far-csu-loopback-test-begin** at 1-minute intervals a maximum of 5 times.
1005	ABORT	Far CSU Loopback Test cannot be executed in the current configuration. To run this, the TN767E or later suffix DS1 must be administered for 24-channel operation. The "Bit Rate" field on the DS1 circuit pack administration form must be set to "1.544" for 24-channel operation.
1015	ABORT	Ports on the DS1 Interface circuit pack have not been busied out to out-of-service. 1. Enter the **busyout board UUCSS** command to put all trunks or ports of the DS1 Interface circuit pack into the out-of-service state. 2. Retry the command.
1039	ABORT	The DS1 Interface circuit pack is providing timing for the system. Executing this test could cause major system disruption. If the DS1 Interface circuit pack needs to be tested, set the synchronization reference to another DS1 Interface circuit pack or to the Tone-Clock circuit pack via the following command sequence: 1. Issue the **disable synchronization-switch** command. 2. Next, issue the **set synchronization UUCSS** command. 3. Lastly, issue the **enable synchronization-switch** command.
1950	ABORT	Another loopback/span test is already executing on the DS1 board or the board is in a network requested loopback mode (Line loopback or Payload loopback). The hardware error log will indicate whether a Customer Loopback Jack Test, Far CSU Loopback Test, or the One-Way Span Test is executing or if the board is in line loopback or payload loopback mode. Only one long-duration loopback/span test can be active at a given time. Thus, if a loopback/span test is already active, that test must be terminated via the *test ds1-loop UUCSS end-loopback/span-test* command in order to execute this test.
	ABORT	Internal system error
2100	ABORT	Could not allocate the necessary system resources to run this test. 1. Retry the command at 1-minute intervals for a maximum of 5 times.

Continued on next page

Table 10-248. TEST #1213 Far CSU Loopback Test — *Continued*

Error Code	Test Result	Description/Recommendation
2000	ABORT	Response to the test was not received within the allowable time period. This may be due to hyperactivity. Error type 1538 in the error log indicates hyperactivity. The hyperactive circuit pack is out of service and one or more of the following symptoms may be exhibited. 1. The DS1-BD tests (such as test 138 and test 139) are aborting with error code 2000. 2. The tests run on the ports of this circuit pack are returning a no board result. 3. A **busyout** or a **release** command has no affect on the test results. 4. A **list config** command shows that the circuit pack and the ports are properly installed. **NOTE:** When hyperactivity occurs, the circuit pack is isolated from the system, and all of the trunks for this circuit pack are placed into the out of service state. The system will try to restore the circuit pack within 15 minutes. When no faults are detected for 15 minutes, the DS1 interface circuit pack is restored to normal operation. All of the trunks for the DS1 interface circuit pack are then returned to the in service state. Hyperactivity is often caused by the associated facility. In such a case, faults (such as slips, misframes, or blue alarms) would be entered in the error log. In addition, many hardware errors would be logged against the associated trunk circuits. If the facility is OK and the error occurs again after 15 minutes, escalate this problem.

Continued on next page

Table 10-248. TEST #1213 Far CSU Loopback Test — *Continued*

Error Code	Test Result	Description/Recommendation
2	FAIL	The far CSU Loopback Test was not set up properly. The DS1 Interface circuit pack could not put the far-end CSU into loopback mode.
3	FAIL	The far CSU Loopback Test was not set up properly. The framed 3-in-24 test pattern, generated by the DS1 Interface circuit pack and looped back through the far-end CSU, could not be detected by the DS1 circuit pack. 1. Retry *t***est ds1-loop UUCSS far-csu-loopback-test-begin**. 2. If the Far CSU Loopback test continues to fail with this error code, the problem could be with the TN767E board, the far-end CSU equipment, or somewhere in between. Run **test ds1-loop UUCSS cpe-loopback-jack-test-begin** to see if the CPE Loopback Jack test which is closer to the TN767E board is successful. (If a CPE Loopback Jack device is not being used, then run **test ds1-loop UUCSS ds1/csu-loopback-tests** to see if these even closer loopback tests succeed). If the closer loopback test fails, follow the maintenance strategy associated with that loopback
	PASS	The Far CSU Loopback test has successfully began executing. The test will continue to run until the system technician enters **test ds1-loop UUCSS end-loopback/span-test** or the **release board UUCSS**.
0	NO BOARD	The test could not relate the internal ID to the port (no board). This could be due to incorrect translations, no board is inserted, an incorrect board is inserted, or an insane board is inserted. 1. Check to ensure that the board translations are correct. Use the **add ds1 UUCSS** command to administer the DS1 interface if it is not already administered. 2. If board was already administered correctly, check the error log to determine if the board is hyperactive. If this is the case, the board is shut down. Reseating the board will re-initialize the board. 3. If the board was found to be correctly inserted in step 1, issue the **busyout board** command. 4. Issue the **reset board** command. 5. Issue the **release busy board** command. 6. Issue the **test board long** command. This should re-establish the link between the internal ID and the port.

One-Way Span Test (#1214)

This test is destructive.

The One-Way Span Test allows one-way span testing to and from remote test equipment or another DEFINITY communications system. This will test all circuitry and facilities from the local TN767E DS1 board to the remote test equipment or other DEFINITY communications system.

The test is destructive and can only be initiated by a system technician demanded *test ds1-loop UUCSS one-way-span-test-begin* command.

All trunks or ports on the DS1 Interface circuit pack must be busied out via the system technician **busyout board** command before running the One-Way Span Test.

The One-Way Span Test has the TN767E DS1 Interface circuit pack transmit a framed 3-in-24 test pattern and attempt to receive and verify the pattern. If the TN767E board receives a framed 3-in-24 test pattern sent from another DEFINITY G3V3 or test equipment at the far-end of the DS1, it will begin counting bit errors within the received pattern.

The status of the One-Way Span test will be available in the hardware error log via error type 3902. Several distinct aux values will be used to give the user information of the status of the test.

The *list measurements ds1 summary* command will display the length of time the test has been running (*Test Duration* field) and number of bit errors detected (*Loopback/Span Test Bit-Error Count* field). If the test pattern is being sent cleanly over the span from the far-end, the number of bit errors should be very low. The *Test Duration* field will show *0* until the test pattern is received from the far-end. Upon receiving the test pattern, the board will begin calculating the test duration and number of bit errors. The command will also display the type of loopback/span test executing (*Test* field), the type of pattern generated for the loopback/span test (*Pattern* field), and whether the pattern (*i.e. 3-in-24 Pattern*) is synchronized (*Synchronized* field).

To terminate the test, enter the *test ds1-loop UUCSS end-loopback/span-test* command or the **release board** command. Using the **release board** command will restore all trunks or ports on the TN767E DS1 Interface circuit pack to the in-service state.

Table 10-249. TEST #1214 One-Way Span Test

Error Code	Test Result	Description/Recommendation
	ABORT	Internal system error 1. Retry the **test ds1-loop UUCSS one-way-span-test-begin** command at 1-minute intervals a maximum of 5 times.
1005	ABORT	One-Way Span Test cannot be executed in the current configuration. To run this, the TN767E or later suffix DS1 must be administered for 24-channel operation. The "Bit Rate" field on the DS1 circuit pack administration form must be set to "1.544" for 24-channel operation.
1015	ABORT	Ports on the DS1 Interface circuit pack have not been busied out to out-of-service. 1. Enter the **busyout board UUCSS** command to put all trunks or ports of the DS1 Interface circuit pack into the out-of-service state. 2. Retry the command.
1039	ABORT	The DS1 Interface circuit pack is providing timing for the system. Executing this test could cause major system disruption. If the DS1 Interface circuit pack needs to be tested, set the synchronization reference to another DS1 Interface circuit pack or to the Tone-Clock circuit pack via the following command sequence: 1. Issue the **disable synchronization-switch** command. 2. Next, issue the **set synchronization UUCSS** command. 3. Lastly, issue the **enable synchronization-switch** command.
1950	ABORT	Another loopback/span test is already executing on the DS1 board or the board is in a network requested loopback mode (Line loopback or Payload loopback). The hardware error log will indicate whether a Customer Loopback Jack Test, Far CSU Loopback Test, or the One-Way Span Test is executing or if the board is in line loopback or payload loopback mode. Only one long-duration loopback/span test can be active at a given time. Thus, if a loopback/span test is already active, that test must be terminated via the **test ds1-loop UUCSS end-loopback/span-test** command in order to execute this test.
	ABORT	Internal system error
2100	ABORT	Could not allocate the necessary system resources to run this test. 1. Retry the command at 1-minute intervals for a maximum of 5 times.

Continued on next page

Table 10-249. TEST #1214 One-Way Span Test — *Continued*

Error Code	Test Result	Description/Recommendation
2000	ABORT	Response to the test was not received within the allowable time period. This may be due to hyperactivity. Error type 1538 in the error log indicates hyperactivity. The hyperactive circuit pack is out of service and one or more of the following symptoms may be exhibited. 1. The DS1-BD tests (such as test 138 and test 139) are aborting with error code 2000. 2. The tests run on the ports of this circuit pack are returning a no board result. 3. **busyout** and **release** have no affect on the test results. 4. **list config** shows that the circuit pack and the ports are properly installed. **NOTE:** When hyperactivity occurs, the circuit pack is isolated from the system, and all of the trunks for this circuit pack are placed into the out of service state. The system will try to restore the circuit pack within 15 minutes. When no faults are detected for 15 minutes, the DS1 interface circuit pack is restored to normal operation. All of the trunks for the DS1 interface circuit pack are then returned to the in service state. Hyperactivity is often caused by the associated facility. In such a case, faults (such as slips, misframes, or blue alarms) would be entered in the error log. In addition, many hardware errors would be logged against the associated trunk circuits. If the facility is OK and the error occurs again after 15 minutes, escalate this problem.
	PASS	The One-Way Span test has successfully began transmitting a framed 3-in-24 test pattern. The test will continue to run until the system technician enters the *test ds1-loop UUCSS end-loopback/span-test* command or the *release board UUCSS* command.

Continued on next page

Table 10-249. TEST #1214 One-Way Span Test — *Continued*

Error Code	Test Result	Description/Recommendation
0	NO BOARD	The test could not relate the internal ID to the port (no board). This could be due to incorrect translations, no board is inserted, an incorrect board is inserted, or an insane board is inserted. 1. Check to ensure that the board translations are correct. Use the **add ds1 UUCSS** command to administer the DS1 interface if it is not already administered. 2. If board was already administered correctly, check the error log to determine if the board is hyperactive. If this is the case, the board is shut down. Reseating the board will re-initialize the board. 3. If the board was found to be correctly inserted in step 1, issue the **busyout board** command. 4. Issue the **reset board** command. 5. Issue the **release busy board** command. 6. Issue the **test board long** command. This should re-establish the link between the internal ID and the port.

Inject Single Bit Error Test (#1215)

This test is destructive.

The Inject Single Bit Error Test will cause a single bit error to be sent within an active framed 3-in-24 test pattern.

The test is highly destructive and can only be initiated by a system technician demanded *test ds1-loop UUCSS inject-single-bit-error* command. An attempt to use this command will be rejected if none of the three long-duration DS1 loopback/span tests (CPE Loopback Jack Test, Far CSU Loopback Test, One-Way Span Test) are active on a TN767E circuit pack.

All trunks or ports on the DS1 Interface circuit pack must be busied out via the system technician **busyout board** command before running the Inject Single Bit Error Test.

The *list measurements ds1 summary* command displays the number of bit errors detected (*Loopback/Span Test Bit-Error Count* field). Injecting this single bit error should increment the bit error count of the loopback/span test by one.

Table 10-250. TEST #1215 Inject Single Bit Error Test

Error Code	Test Result	Description/Recommendation
	ABORT	Internal system error 1. Retry the *test ds1-loop UUCSS inject-single-bit-error* command at 1-minute intervals a maximum of 5 times.
1015	ABORT	Ports on the DS1 Interface circuit pack have not been busied out to out-of-service. 1. Enter the **busyout board UUCSS** command to put all trunks or ports of the DS1 Interface circuit pack into the out-of-service state. 2. Retry the command.
	ABORT	Internal system error
2100	ABORT	Could not allocate the necessary system resources to run this test. 1. Retry the command at 1-minute intervals for a maximum of 5 times.

Continued on next page

Table 10-250. TEST #1215 Inject Single Bit Error Test — *Continued*

Error Code	Test Result	Description/Recommendation
2000	ABORT	Response to the test was not received within the allowable time period. This may be due to hyperactivity. Error type 1538 in the error log indicates hyperactivity. The hyperactive circuit pack is out of service and one or more of the following symptoms may be exhibited. 1. The DS1-BD tests (such as test 138 and test 139) are aborting with error code 2000. 2. The tests run on the ports of this circuit pack are returning a no board result. 3. A **busyout** or a **release** command has no affect on the test results. 4. A **list config** command shows that the circuit pack and the ports are properly installed. **NOTE:** When hyperactivity occurs, the circuit pack is isolated from the system, and all of the trunks for this circuit pack are placed into the out of service state. The system will try to restore the circuit pack within 15 minutes. When no faults are detected for 15 minutes, the DS1 interface circuit pack is restored to normal operation. All of the trunks for the DS1 interface circuit pack are then returned to the in service state. Hyperactivity is often caused by the associated facility. In such a case, faults (such as slips, misframes, or blue alarms) would be entered in the error log. In addition, many hardware errors would be logged against the associated trunk circuits. If the facility is OK and the error occurs again after 15 minutes, escalate this problem.
	PASS	A single bit error has been successfully injected into an active framed 3-in-24 test pattern.

Continued on next page

Table 10-250. TEST #1215 Inject Single Bit Error Test — *Continued*

Error Code	Test Result	Description/Recommendation
0	NO BOARD	The test could not relate the internal ID to the port (no board). This could be due to incorrect translations, no board is inserted, an incorrect board is inserted, or an insane board is inserted. 1. Check to ensure that the board translations are correct. Use the **add ds1 UUCSS** command to administer the DS1 interface if it is not already administered. 2. If board was already administered correctly, check the error log to determine if the board is hyperactive. If this is the case, the board is shut down. Reseating the board will re-initialize the board. 3. If the board was found to be correctly inserted in step 1, issue the **busyout board** command. 4. Issue the **reset board** command. 5. Issue the **release busy board** command. 6. Issue the **test board long** command. This should re-establish the link between the internal ID and the port.

End Loopback/Span Test (#1216)

This test is destructive.

The End Loopback/Span Test will terminate an active loopback or span test on a TN767E DS1 circuit pack. Bit error counting against the received test pattern stream is terminated and sending of the framed 3-in-24 test pattern is halted. If either the CPE Loopback Jack or the far-end CSU is looped, the appropriate loopback deactivate code is sent. If the loopback could not be deactivated, then the test will FAIL and a MINOR alarm will be noted in the alarm log until the loopback is cleared.

The test is highly destructive and can only be initiated by a system technician demanded *test ds1-loop UUCSS end-loopback/span-test* command. Since only one of these three different long-duration loopback/span tests can be active at a time, the TN767E circuit pack knows which loopback/span test to terminate.

All trunks or ports on the DS1 Interface circuit pack must be busied out via the system technician **busyout board** command before running this End Loopback/Span Test.

The *list measurements ds1 summary* command will display the length of time the test ran (*Test Duration* field) and number of bit errors detected (*Loopback/Span Test Bit-Error Count* field).

To restore the trunks or ports on the TN767E DS1 Interface circuit pack to the in-service state, execute the **release board** command.

Table 10-251. TEST #1216 End Loopback/Span Test

Error Code	Test Result	Description/Recommendation
	ABORT	Internal system error 1. Retry the *test ds1-loop UUCSS end-loopback/span-test* command at 1-minute intervals a maximum of 5 times.
1005	ABORT	End Loopback/Span Test cannot be executed in the current configuration. To run this, the TN767E or later suffix DS1 must be administered for 24-channel operation. The "Bit Rate" field on the DS1 circuit pack administration form must be set to "1.544" for 24-channel operation.
1015	ABORT	Ports on the DS1 Interface circuit pack have not been busied out to out-of-service. 1. Enter the **busyout board UUCSS** command to put all trunks or ports of the DS1 Interface circuit pack into the out-of-service state. 2. Retry the command.
	ABORT	Internal system error
2100	ABORT	Could not allocate the necessary system resources to run this test. 1. Retry the command at 1-minute intervals for a maximum of 5 times.

Continued on next page

Table 10-251. TEST #1216 End Loopback/Span Test — *Continued*

Error Code	Test Result	Description/Recommendation
2000	ABORT	Response to the test was not received within the allowable time period. This may be due to hyperactivity. Error type 1538 in the error log indicates hyperactivity. The hyperactive circuit pack is out of service and one or more of the following symptoms may be exhibited. 1. The DS1-BD tests (such as test 138 and test 139) are aborting with error code 2000. 2. The tests run on the ports of this circuit pack are returning a no board result. 3. A **busyout** or a **release** command has no affect on the test results. 4. A **list config** command shows that the circuit pack and the ports are properly installed. **NOTE:** When hyperactivity occurs, the circuit pack is isolated from the system, and all of the trunks for this circuit pack are placed into the out of service state. The system will try to restore the circuit pack within 15 minutes. When no faults are detected for 15 minutes, the DS1 interface circuit pack is restored to normal operation. All of the trunks for the DS1 interface circuit pack are then returned to the in service state. Hyperactivity is often caused by the associated facility. In such a case, faults (such as slips, misframes, or blue alarms) would be entered in the error log. In addition, many hardware errors would be logged against the associated trunk circuits. If the facility is OK and the error occurs again after 15 minutes, escalate this problem.
1313	FAIL	The TN767E DS1 circuit pack could not deactivate the loopback through the Customer Loopback Jack. 1. Retry the *test ds1-loop UUCSS end-loopback/span-test* command at 1-minute intervals for a maximum of 5 times.

Continued on next page

Table 10-251. TEST #1216 End Loopback/Span Test — *Continued*

Error Code	Test Result	Description/Recommendation
1314	FAIL	The TN767E DS1 circuit pack could not deactivate the loopback through the far-end CSU. 1. Make sure that the far-end DS1 is installed if the far-end CSU is a 120A CSU Module/T1 Sync Splitter. 2. Retry the *test ds1-loop UUCSS end-loopback/span-test* command at 1-minute intervals for a maximum of 5 times.
	PASS	The active long-duration loopback or span test on the TN767E circuit pack was successfully terminated.
0	NO BOARD	The test could not relate the internal ID to the port (no board). This could be due to incorrect translations, no board is inserted, an incorrect board is inserted, or an insane board is inserted. 1. Check to ensure that the board translations are correct. Use the **add ds1 UUCSS** command to administer the DS1 interface if it is not already administered. 2. If board was already administered correctly, check the error log to determine if the board is hyperactive. If this is the case, the board is shut down. Reseating the board will re-initialize the board. 3. If the board was found to be correctly inserted in step 1, issue the **busyout board** command. 4. Issue the **reset board** command. 5. Issue the **release busy board** command. 6. Issue the **test board long** command. This should re-establish the link between the internal ID and the port.

ICSU Status LEDs Test (#1227)

The TN767E DS1 circuit pack has four status LEDs on the faceplate in addition to the three standard faceplate LEDs. These four status LEDs are associated with the 120A1 Channel Service Unit (CSU) Module that can be connected to the TN767E board via the I/O connector panel on the back of the port carrier.

This test is a visual test. It will light the four status LEDs red for 5 seconds, then light them green for 5 seconds, then light them yellow for 5 seconds, then turn the LEDs off and returns control of the status LEDs to the circuit pack.

This test will only be executed on TN767E or later suffix DS1 circuit packs administered for 24-channel operation (1.544 bit rate).

If the 1201 CSU Module/T1 Sync Splitter is not installed, the status LEDs are always off and this test aborts.

Table 10-252. TEST #1227 ICSU Status LEDs Test

Error Code	Test Result	Description/Recommendation
	ABORT	Internal system error 1. Retry the command at 1-minute intervals a maximum of 5 times.
1005	ABORT	The ICSU Status LEDs test can not be executed for the current configuration. The test applies only to TN767E or later DS1 circuit packs administered for 24-channel operation (1.544 bit rate). 1. If the circuit pack is a TN767E or later suffix DS1 circuit pack, then retry the command.
1951	ABORT	The ICSU Status LEDs Test can not be executed because a 120A1 or later suffix CSU Module or a 401A or later suffix T1 Sync Splitter is not physically installed. If using a 120A1 CSU Module/T1 Sync Splitter, physically connect it to the TN767E board on the back of the port carrier otherwise, ignore this abort.
2100	ABORT	Could not allocate the necessary system resources to run this test. 1. Retry the command at 1-minute intervals for a maximum of 5 times.

Continued on next page

Table 10-252. TEST #1227 ICSU Status LEDs Test — *Continued*

Error Code	Test Result	Description/Recommendation
2500	ABORT	Internal system error. 1. Retry the command.
	PASS	The ICSU Status LEDs test executed successfully. A PASS result, however, does not necessarily mean that the status LEDs behaved properly. It only means that the software successfully attempted to light the status LEDs. This is a visual test. The service technician must visually exam the behavior of the LEDs while the test is running. The LEDs are functioning properly if the four status LEDs are lit red for 5 seconds, then lit green for 5 seconds, then lit yellow for 5 seconds. If the LEDs behave differently, escalate this problem.
0	NO BOARD	The test could not relate the internal ID to the port (no board). This could be due to incorrect translations, no board is inserted, an incorrect board is inserted, or an insane board is inserted. 1. Check to ensure that the board translations are correct. Use the **add ds1 UUCSS** command to administer the DS1 interface if it is not already administered. 2. If board was already administered correctly, check the error log to determine if the board is hyperactive. If this is the case, the board is shut down. Reseating the board will re-initialize the board. 3. If the board was found to be correctly inserted in step 1, issue the **busyout board** command. 4. Issue the **reset board** command. 5. Issue the **release busy board** command. 6. Issue the **test board long** command. This should re-establish the linkage between the internal ID and the port.

DT-LN-BD (Data Line Circuit Pack)

MO Name (in Alarm Log)	Alarm Level	Initial Command to Run[1]	Full Name of MO
DT-LN-BD	MIN	test board PCSS sh	Data Line Circuit Pack
DT-LN-BD	WRN	test board PCSS sh	Data Line Circuit Pack

1 Where P is the port network number (1 for PPN and 2 or 3 for EPN); C is the carrier designation (for example, A, B, C, D, or E); and SS is the address of the slot in the carrier where the circuit pack is located (for example, 01, 02, etc.).

Refer to XXX-BD (Common Port Circuit Pack) Maintenance documentation for circuit pack level errors. See also DAT-LINE (Data Line Circuit Port) Maintenance documentation for related line information.

DTMR-PT [Dual Tone Multifrequency Port (TTR)]

MO Name (in Alarm Log)	Alarm Level	Initial Command to Run[1]	Full Name of MO
DTMR-PT	MAJOR	test port PCSSpp sh	Dual Tone Multifrequency Receiver Port (TTR)
DTMR-PT	MINOR	test port PCSSpp sh	Dual Tone Multifrequency Receiver Port (TTR)
DTMR-PT	WARNING	release port PCSSpp	Dual Tone Multifrequency Receiver Port (TTR)

1 Where P is the port network number (1 for PPN and 2 or 3 for EPN); C is the carrier designation (for example, A, B, C, D, or E); SS is the address of the slot in the carrier where the circuit pack is located (for example, 01, 02, etc.); and pp is the 2-digit port number (for example, 01).

The Dual Tone Multifrequency Receiver Port (DTMR), also known as the Touch-Tone Receiver (TTR), resides on the Tone Detector circuit pack (TN748, TN420) or the TN756 Tone-Clock circuit pack. There are four Dual Tone Multifrequency Receiver (DTMR-PT) ports and two General Purpose Tone Detector (GPTD-PT) ports on a Tone Detector circuit pack. The DTMR port is used to detect touch-tone digits that are placed on the TDM bus. Examples of touch-tone digits are digits 0 through 9, digit #, and digit *. The ability of the DTMR port to detect touch-tone digits is essential for maintenance of other circuit packs (for example, Tone-Clock circuit pack) and in placing a station-to-station call. Calls originating from a hybrid station **do not** require a DTMR port.

The Dual Tone Multifrequency Receiver Port maintenance object defines a set of tests to verify that the DTMF digits detection capability of the DTMR port is functioning properly. For all Tone Detector circuit pack level errors (DETR-BD), refer to the XXX-BD (Common Port Circuit Pack) Maintenance documentation.

Hardware Error Log Entries and Test to Clear Values

Dual Tone Multifrequency Receiver Port (TTR) Error Log Entries

Error Type	Aux Data	Associated Test	Alarm Level	On/Off Board	Test to Clear Value
0[1]	0	Any	Any	Any	test port PCSSpp sh r 1
1 (b)	17664	Tone Detector Audit/Update Test (#43)	MAJOR/ MINOR (a)	ON	test port PCSSpp r 2
18	0	busyout port PCSSpp	WARNING	ON	release port PCSSpp
130 (d)		None	WARNING	ON	test port *PCSSpp* sh r 2
257 (c)	17666	Tone Detector Audit/Update Test (#43)	MAJOR/ MINOR (a)	ON	test port PCSSpp r 3
513	Any	Tone Detection Verification Test (#42)	MAJOR/ MINOR (a)	ON	test port PCSSpp r 3

1 Run the Short Test Sequence first. If all tests pass, run the Long Test Sequence. Refer to the appropriate test description and follow the recommended procedures.

Notes:

a. There are two possible alarm levels for this error: Major alarm and Minor alarm. A Major alarm is raised if the total number of DTMR ports currently in service is less than or equal to one half of the administered threshold number. Otherwise, a Minor alarm is raised. In either case, run the Short Test Sequence against the DTMR port and follow the error code procedures for the individual tests.

   The threshold number of DTMR ports for service is administered using the **change system-parameters maintenance** command.

b. This error indicates the DTMR port is having problems detecting touch-tone digits. If this error is being constantly logged, then the Tone Detector circuit pack containing the defective DTMR port should be replaced.

c. The DTMR port lost its translation. Testing the DTMR port is sufficient to reload its translation. If testing the DTMR port does not clear the error, then the Tone Detector circuit pack containing the defective DTMR port should be replaced.

d. This error type indicates that the circuit pack has been removed or has been insane for at least 11 minutes. To clear the error, reinsert or replace the circuit pack.

System Technician-Demanded Tests: Descriptions and Error Codes

Always investigate tests in the order presented in the table below when inspecting errors in the system. By clearing error codes associated with the *Tone Detection Verification Test,* for example, you may also clear errors generated from other tests in the testing sequence.

Order of Investigation	Short Test Sequence	Long Test Sequence	D/ND[1]
Tone Detection Verification Test (#42)	X	X	ND
Tone Detector Audit/Update Test (#43)	X	X	ND

1 D = Destructive; ND = Nondestructive

Tone Detection Verification Test (#42)

This test verifies the “touch-tone digits detection” capability of the DTMR port is functioning properly.

Table 10-253. TEST #42 Tone Detection Verification Test

Error Code	Test Result	Description/Recommendation
none	ABORT	The system was not able to allocate all the resources needed for this test or there was an Internal System Error.
1	ABORT	The system could not allocate all the resources needed to test the DTMR port.
1001	ABORT	The system was unable to put the DTMR port in the appropriate mode to test it.
1002	ABORT	The system could not allocate time slots for the test connection. This could happen when the system is heavily loaded. If the system is not heavily loaded, then test the TDM Bus via the **test tdm [a|b]** command. Refer to the TDM-BUS (TDM Bus) Maintenance documentation for details. 1. Retry the command at one-minute intervals a maximum of 5 times.

Continued on next page

Table 10-253. TEST #42 Tone Detection Verification Test — *Continued*

Error Code	Test Result	Description/Recommendation
1003	ABORT	The system could not allocate a Tone Generator for the test connection. This could happen when the system is heavily loaded or there is not a Tone-Clock circuit pack in the port network when this test is being executed. 1. Make sure there is a Tone-Clock circuit pack in the same port network. 2. If a Tone-Clock circuit pack is missing, install one in the same port network. 3. Allow about one-minute for the Tone-Clock maintenance to run on the newly inserted Tone-Clock circuit pack. 4. Retry the command at one-minute intervals a maximum of 5 times.
2000	ABORT	Response to the test request was not received within the allowable time period.
2100	ABORT	Could not allocate the necessary system resources to run this test. 1. Retry the command at one-minute intervals a maximum of 5 times.
2006	ABORT	DTMF detection failed. This could be caused by the administered companding mode of the system not matching that of the Tone Detector circuit pack. 1. Make sure that companding mode of the system matches that of the Tone Detector.
1-3	FAIL	DTMF digits were not correctly detected. 1. Run the Short Test Sequence: **test port PCSSpp sh r 1**. 2. If the problem persists, the system is still operating properly but system capacity will be reduced. In order to restore the system performance to normal, replace the Tone Detector circuit pack containing the defective DTMR port.
	PASS	The DTMR port is able to detect all the touch-tone digits.

Tone Detector Audit/Update Test (#43)

The DTMR port is refreshed with all time slot information and sanity audit is performed on the DTMR port.

Table 10-254. TEST #43 Tone Detector Audit/Update Test

Error Code	Test Result	Description/Recommendation
	ABORT	The system was not able to allocate all the resources needed for this test. 1. Wait one minute and try again.
2000	ABORT	Response to the test request was not received within the allowable time period.
2100	ABORT	Could not allocate the necessary system resources to run this test. 1. Retry the command at one-minute intervals for a maximum of 5 times.
	FAIL	Hardware audit failed. 1. Run the Short Test Sequence: **test port PCSSpp sh r 1**. 2. If the problem persists, the system is still operating properly but system capacity is reduced. In order to restore the system performance to normal, replace the Tone Detector circuit pack containing the defective DTMR port.
	PASS	The DTMR port has been successfully refreshed with its translation.

DUPINT (Duplication Interface Circuit Pack)

MO Name (in Alarm Log)	Alarm Level	Initial Command to Run[1]	Full Name of MO
DUPINT	MAJOR	test duplication 1C	Duplication Interface Circuit Pack
DUPINT	WARNING	test duplication 1C	Duplication Interface Circuit Pack

1 Alarms on Duplication Interface circuit pack in the A carrier are always major alarms and alarms on Duplication Interface circuit pack in the B carrier are always warning alarms. Determine the carrier to test from the `Port` field in the Alarm or Error Log.

In High or Critical Reliability PPN systems, there are two Duplication Interface (DUPINT) circuit packs: one in carrier A and one in carrier B. Together, both circuit packs provide memory shadowing (see “SHDW-CIR” for a full description) and communication between software on the Active and Standby SPEs. By itself, Duplication Interface circuit pack A provides control of the duplicated Processor circuit pack, environmental maintenance monitoring and control, and administration terminal connection.

TN792 circuit pack

Upgrade compatibility

The TN792 Duplication Interface circuit pack is *not backward compatible* (only works with system running Release 7 or greater software) because it provides enhanced duplication by using the Enhanced M-Bus (EM-Bus) functionality in the TN2404/TN790 processor circuit pack. The EM-Bus provides 32-bit address and data access to improve shadowing speed and increase the shadowed memory range. This means that:

- The TN792 can replace the TN772 Duplication Interface pack, however *it is not compatible with TN772*. If one Duplication Interface circuit pack is upgraded from TN772 to TN792, then you must upgrade the other side.
- The TN792 is compatible only with the TN2404/TN790 processor circuit pack that must be upgraded simultaneously with the DUPINT circuit packs.
- Existing cables are compatible with the TN792 circuit pack.
- When swapping TN772s for TN792s, power down both the active and standby carriers, swap the circuit packs, and reapply power to the carriers.

Faceplate connections

An optical cable interface connects on the front faceplate of the TN792 to shadow data between Duplication Interface circuit packs.

LEDs

Table 10-255 shows the 4 front panel LEDs that signal the following information:

Table 10-255. TN792 LED description

Color (from top to bottom)	Explanation
Red (top)	Fault detected
Green	Maintenance routine in progress on this circuit pack
Yellow	Lit when in active carrier. Flashing LED(s) means one of the following: ■ optical cable is not attached ■ optical cable is attached incorrectly ■ optical cable is broken ■ transmit or receive hardware on one or both circuit packs is malfunctioning ■ one of the DUPINT circuit packs is bad
Red	SPE select switches on both Duplication Interface circuit packs are set the same (either SPE A or SPE B). Both switches must be in the same position for this LED to light.

SPE select switches

Each Duplication Interface circuit pack has a faceplate SPE-select switch with A, B, or AUTO positions for determining which SPE is active. See Table 10-256:

Table 10-256. TN792 SPE-select positions

SPE A setting	SPE B setting	Effect
A	A	Forces carrier A active
B	B	Forces carrier B active
A	B	Software determines active carrier[1]
B	A	
AUTO	AUTO	

1 If the SPE select switches are in a locked position and either or both of the Duplication Interface circuit packs are removed, the active SPE remains active, and no SPE-interchange occurs.

Hot plug-in and removal

The standby TN792 circuit can be hot-swapped or removed if the active SPE is locked online without having first removed carrier power. Inserting or removing a standby Duplication Interface circuit pack from a control carrier

- does not disrupt the EM-Bus of the opposite control carrier if (and only if) the memory shadow is *not* active at the time.

  NOTE:
  You can ensure that memory shadowing is *not* active by locking the active SPE online.

- does not disrupt system operation.

When the standby Duplication Interface circuit pack is reinserted, it resets the standby processor. Table 10-257 on page 10-703 details the consequences of removing either the active or standby DUPINT.

Table 10-257. Standby Duplication Interface circuit pack removal interactions

If	Then
A carrier DUPINT removed	SAT connection broken
B carrier DUPINT removed	System performs as simplex

Control leads on the ICC

Duplication Interface circuit pack A controls a lead that lets the Tone-Clock circuit packs know which Tone-Clock is supposed to be active and additional leads that control which SPE is active. The system software can request that either the SPE Select lead or Tone-Clock lead be changed.

The Duplication Interface circuit packs communicate over the Inter-Carrier Cable (ICC), which connects the Duplication Interface circuit packs through pin fields on the backplane. The ICC consists of two 25-pin connector cables known as ICC-A and ICC-B.

NOTE:
A single-carrier cabinet system also has an ICC-C. The pin fields where ICC-A and ICC-B connect are clearly labeled on the backplane near the pin fields for the Duplication Interface circuit packs. The ICC carries several important leads related to maintaining a High or Critical Reliability system.

ICC-A may be duplicated in both MCC and SCC cabinets with the TN792. However they may be left in if desired.

Table 10-258 describes 3 of the important ICC connections.

Table 10-258. ICC signals from the Duplication Interface circuit pack

Lead	Description
Tone-Clock	Indicates which Tone-Clock circuit pack is active
SPE Select Switch State	Indicates the position of the SPE-select switch
Emergency Transfer	Indicates whether Emergency is on or off in the PPN cabinet

Without the ICC properly attached, the system cannot function as a High or Critical Reliability system.

Changing SAT terminal connections

Duplication Interface circuit pack A controls and monitors the same environment leads that the Maintenance/Tape Processor does in a PPN a system without High or Critical Reliability. Duplication Interface circuit pack A also supports the serial channel to the PPN administration terminal in a High or Critical reliability PPN. The administration terminal connects to Duplication Interface circuit pack A via a connector on the back of carrier A labeled DOT. At any time, the administration terminal may be disconnected from Duplication Interface circuit pack A and connected directly to the active Maintenance/Tape Processor by attaching the administration terminal to the connector marked TERM on the active carrier. This connection should only be made if the administration terminal fails to function since a problem with the Duplication Interface circuit pack A may be present.

Schematic

Figure 10-28 on page 10-705 depicts the interconnection of the Duplication Interface circuit packs with the rest of the system. The dotted lines in Figure 10-28 on page 10-705 show the logical serial channel rather than actual physical implementation of the serial channel. For clarity, the UARTs are not shown. The following circuit pack abbreviations are used in Figure 10-28 on page 10-705:

- DUPINT for Duplication Interface circuit pack
- PI for Processor Interface
- Net Pkt for Network Controller/Packet Interface

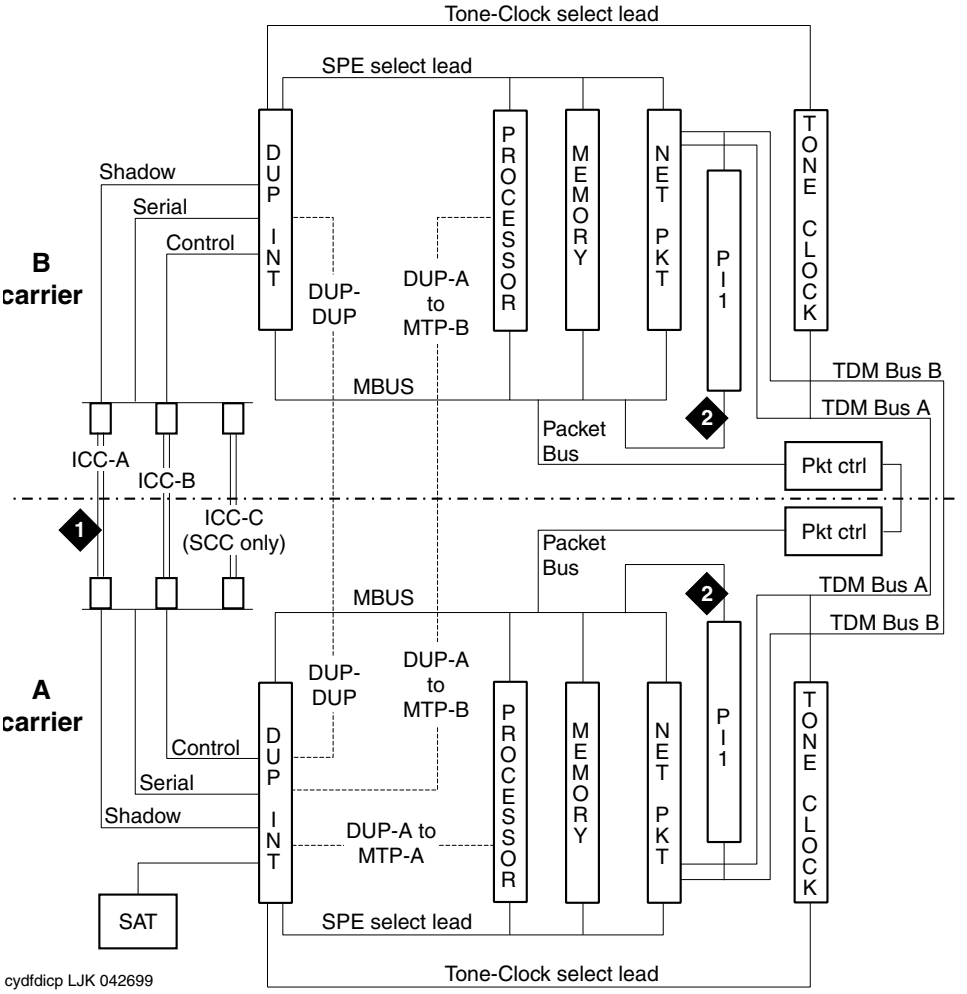

Figure Notes:

1. Fiber optic connection (front of TN792)
2. Processor Interface circuit pack

Figure 10-28. Duplication Interface circuit pack interactions

Error Log Entries and Test to Clear Values

Table 10-259. Duplication Interface Circuit Pack Error Log Entries

Error Type	Aux Data	Associated Test	Alarm Level	On/Off Board	Test to Clear Value
0[1]	0	Any	Any	Any	test dup 1C sh r 1
1		Sanity Circuit Test (#273)	MAJOR/ WRN	ON	test dup 1C l r 1
108 (a)	Any	None			
109 (a)	Any	None			
257		SAT Loop Back Test (#274)	MAJOR/ WRN	ON	test dup 1C sh r 3
513		SPE A Loop Back Test (#275)	MAJOR/ WRN	ON	test dup 1C sh r 3
769		SPE B Loop Back Test (#276)	MAJOR/ WRN	ON	test dup 1C sh r 3
1025		Sanity Maze Test (#277)	MAJOR /WRN	ON	test dup 1C sh r 3
1281 (b)	Any	DUPINT Status Query Test (#315)	MAJOR/ WRN	ON	test dup 1C sh r 6
1537 (c)	Any	Background Test Query Test (#271)	MAJOR/ WRN	ON	test dup 1C sh r 3
1793 (d)	Any	MBUS Time-Out Query Test (#285)	MAJOR/ WRN	ON	test dup 1C l r 3

1 Run the Short Test Sequence first. If all tests pass, run the Long Test Sequence. Refer to the appropriate test description and follow the recommended procedures.

Notes:

a. This error indicates that an unexpected hardware reset has occurred on the Duplication Interface circuit pack. Appropriate action has been taken by the software to prevent malfunction. However, if this type error occurs with regular frequency, the DUPINT circuit pack may need to be replaced.

b. There are several possible Aux Data fields for this error, including blank. All indicate loss of contact with the indicated Duplication Interface circuit packs.

The following table summarizes the Aux Data fields.

Aux Data	Description
1 or 3	Duplication Interface circuit pack A lost handshaking with Duplication Interface circuit pack B.
2	MTP lost handshaking with the Duplication Interface circuit pack.
221	Duplication Interface circuit pack reported the trouble.
65315 or 65503	Duplication Interface circuit pack A lost contact with Duplication Interface circuit pack B.
Blank, 65313, or 65501	If reported against Duplication Interface circuit pack A, Duplication Interface circuit pack A lost handshaking with Maintenance/Tape Processor A. If reported against Duplication Interface circuit pack B, Duplication Interface circuit pack A lost handshaking with Maintenance/Tape Processor B.

c. An Aux value of blank or 65317 is valid. The 65317 Aux value means the Duplication Interface circuit pack reported the trouble, while the blank means the software detected the trouble.

d. This could be caused by mismatched numbers of Processor Interface, Packet Control, or NetPkt circuit packs in the two SPEs or by a defective Duplication Interface circuit pack. If the Duplication Interface circuit pack is defective and becomes part of the Standby SPE, then memory shadowing does not work. Follow the procedures given for the FAIL case of Common Shadow Circuit M-Bus Time-Out Query Test (#285) in the SHDW-CIR section.

System Technician-Demanded Tests: Descriptions and Error Codes

Always investigate tests in the order they are presented in the table below. By clearing error codes associated with the *Duplication Interface Circuit Pack Status Query Test,* for example, you may also clear errors generated from other tests in the testing sequence.

For example, you may also clear errors generated from other tests in the testing sequence.

Table 10-260. System Technician-Demanded Tests: DUPINT

Order of Investigation	Short Test Sequence		Long Test Sequence		D/ND[1]
	Active	Standby	Active	Standby	
Duplication Interface Circuit Pack Status Query Test (#315)	X	X	X	X	ND
Duplication Interface Circuit Pack Sanity Maze Test (#277)	X	X	X	X	ND
Duplication Interface Circuit Pack SPE A Loop Back Test (#275)	X	X	X	X	ND
Duplication Interface Circuit Pack SPE B Loop Back Test (#276)	X	X	X	X	ND
Duplication Interface Circuit Pack Administration Terminal Loop Back Test (#274)(a)	X	X	X	X	ND
Inter-Duplication Interface Circuit Pack Loop Back Test (#280)	X	X	X	X	ND
Duplication Interface Circuit Pack Background Test Query Test (#271)	X	X	X	X	ND
Duplication Interface Circuit Pack Invalid Message Query Test (#272)	X	X	X	X	ND
Common Shadow Circuit Fiber Cable Present Test (#1289) (b)	X	X	X	X	ND
Common Shadow Circuit M-BUS Time-out Query Test (#285) (b)			X	X	ND
Common Shadow Circuit Loop Back Test (#283) (b)		X		X	ND
Common Shadow Circuit Address Decoder Test (#284) (b)		X		X	ND
SPE Select Switch Query Test (#278) (c)	X	X	X	X	ND

1 D = Destructive, ND = Non-destructive

Notes:

a. When running the Long Test Sequence on Duplication Interface circuit pack A, the results of Test #273 may overwrite the results of Test #274.

b. Refer to SHDW-CIR (Common Shadow Circuit) for a description of this test.

c. Refer to SPE-SELEC (SPE Select Switch) for a description of this test.

Duplication Interface Circuit Pack Background Test Query (#271)

This test queries the Duplication Interface circuit pack for the results of its background tests. The response indicates the results of the last time the following background tests were run:

- ROM Checksum Test: This test verifies the correctness of the Duplication Interface circuit pack firmware.
- RAM Test: This tests verifies that the RAM on the Duplication Interface circuit pack is functioning properly.

Table 10-261. TEST #271 Duplication Interface Circuit Pack Background Test Query Test

Error Code	Test Result	Description/Recommendation
1000	ABORT	System resources required to run this test are not available.
2000	ABORT	Response to the test request was not received within the allowable time period.
2033	ABORT	Internal system error 1. Retry the command at 1-minute intervals a maximum of 5 times.
2008 2009 2010	FAIL	One or both background tests failed on the Duplication Interface circuit pack. Error Code 2008 means the ROM test failed. Error Code 2009 means the RAM test failed. Error Code 2010 means both tests failed. 1. Follow the procedures for replacing Common Control circuit packs and replace the Duplication Interface circuit pack. 2. Rerun the test.
	NO BOARD	The Duplication Interface circuit pack has failed to reply to handshaking from either the active Maintenance/Tape Processor (in the case of Duplication Interface circuit pack A) or from Duplication Interface circuit pack A (in the case of Duplication Interface circuit pack B). 1. Refer to NO BOARD description for the Duplication Interface Circuit Pack Status Query Test (#315).

Duplication Interface Circuit Pack Invalid Message Query Test (#272)

The Duplication Interface Circuit Pack Invalid Message Query Test sets the threshold for the number of bad checksum errors the Duplication Interface circuit pack detects before reporting the problem to maintenance and queries the Duplication Interface circuit pack for the number of checksum errors detected. The error threshold is set to 10. The query causes Duplication Interface circuit pack firmware to clear its bad checksum error counter. This test is run on both circuit packs, but has little meaning on Duplication Interface circuit pack B and should always pass.

Table 10-262. TEST #272 Duplication Interface Circuit Pack Invalid Message Query Test

Error Code	Test Result	Description/Recommendation
1000	ABORT	System resources required to run this test are not available.
2000	ABORT	Response to the test request was not received within the allowable time period.
2033	ABORT	Internal system error 1. Retry the command at 1-minute intervals a maximum of 5 times.
	FAIL	The Duplication Interface circuit pack is receiving an abnormal number of corrupted messages. 1. First investigate other Duplication Interface circuit pack tests that are not passing. 2. If this is the only test that fails, investigate and resolve all alarms against PR-MAINT (Maintenance/Tape Processor). 3. Rerun the test. If the test still fails, follow the procedures for replacing Common Control circuit packs and replace the Duplication Interface circuit pack. 4. Rerun the test.
	NO BOARD	The Duplication Interface circuit pack has failed to handshake with either the active Maintenance/Tape Processor (in the case of Duplication Interface circuit pack A) or the Duplication Interface circuit pack A (in the case of Duplication Interface circuit pack B). 1. Refer to NO BOARD description for the Duplication Interface Circuit Pack Status Query Test (#315).
	PASS	The Duplication Interface circuit pack has not received any bad messages from either Maintenance/Tape Processor or the other Duplication Interface circuit pack. All serial links are operating fine.

Duplication Interface Circuit Pack Sanity Circuit Test (#273)

This test is destructive.

This test checks the sanity hardware of a Duplication Interface circuit pack. The Duplication Interface circuit pack processor is instructed to allow the on-board circuit pack sanity timer to expire, which should cause the circuit pack to reset itself. The software then allows the Duplication Interface circuit pack 15 seconds to reset. After this time, the Duplication Interface circuit pack is queried for the results of its background tests (see Test #271). If the Duplication Interface circuit pack responds to this query, then the reset passes. If performed on Duplication Interface A, this test can cause an SPE interchange to the SPE in the B carrier if the A carrier SPE was active when the test was executed. The B carrier Tone-Clock circuit pack is also selected on Duplication Interface circuit pack A processor reset. This test is run only when demanded by software and can be performed on either Duplication Interface circuit pack. There is no service-disruption when this test is run on Duplication Interface B.

Table 10-263. TEST #273 Duplication Interface Circuit Pack Sanity Circuit Test

Error Code	Test Result	Description/Recommendation
1000	ABORT	System resources required to run this test are not available. 1. Retry the command at 1-minute intervals a maximum of 5 times.
1037	ABORT	The active Tone-Clock circuit pack is currently the one in the A carrier. If the Duplication Interface circuit pack is allowed to be reset at this time, an unscheduled tone/clock switch would take place resulting in a Cold 2 restart. 1. Resolve any TONE-BD alarms. 2. When there are no alarms against TONE-BD in the B carrier, force the Tone-Clock circuit pack to be active by issuing the **set tone-clock b** command. 3. Verify the B carrier Tone-Clock circuit pack is active by using the **status system** command. 4. Rerun the Duplication Interface circuit pack test.
1185	ABORT	Only occurs when attempting to reset Duplication Interface A when SPE A is active and SPE A has not been selected by the SPE Select switch. In this case, resetting Duplication Interface A causes a warm start SPE-interchange to SPE B. 1. Issue the **reset system interchange** command to make SPE A the Standby SPE. 2. Repeat the test.

Continued on next page

Table 10-263. TEST #273 Duplication Interface Circuit Pack Sanity Circuit Test — *Continued*

Error Code	Test Result	Description/Recommendation
2018	ABORT	Applicable only when testing Duplication Interface A. 1. Refer to STBY-SPE (Standby SPE) Maintenance documentation.
2033	ABORT	Internal system error 1. Retry the command at 1-minute intervals a maximum of 5 times.
2052	ABORT	Only occurs when attempting to reset Duplication Interface A. If SPE B is not in Standby Mode, ready to take over, then this test aborts. 1. Resolve any STBY-SPE errors and alarms. 2. Use **refresh spe** command to place SPE B in Standby Mode. 3. Repeat the test.
2000	FAIL	The software timed out waiting for Duplication Interface circuit pack to respond to the background test query. 1. Rerun the test. 2. If the test fails with Error Code 2000 again, then deal with the Duplication Interface Circuit Pack Status Query Test (#315) results first.
	FAIL	The sanity timer circuit on the Duplication Interface circuit pack is defective. The Duplication Interface circuit pack should be replaced. 1. Follow the procedure for replacing Common Control circuit packs, and replace the Duplication Interface circuit pack. 2. Rerun the test.
	NO BOARD	The Duplication Interface circuit pack has failed to handshake with either the active Maintenance/Tape Processor (in the case of Duplication Interface circuit pack A) or the Duplication Interface circuit pack A (in the case of Duplication Interface circuit pack B). 1. Refer to NO BOARD description for the Duplication Interface Circuit Pack Status Query Test (#315).
	PASS	The Duplication Interface circuit pack successfully reset. The Duplication Interface circuit pack may still have problems related to any of the other Duplication Interface circuit pack tests. Follow up on any other test failures.

Duplication Interface Circuit Pack Administration Terminal Loop Back Test (#274)

This test loops back data through the UART used to communicate with administration terminal. The data is generated by the Duplication Interface circuit pack processor and is looped through the UART. The test is done entirely on the Duplication Interface circuit pack. The test passes if the data sent matches the data received. This test does not check the physical serial channel that is printed on the backplane or carried by the ICC.

Table 10-264. TEST #274 Duplication Interface Circuit Pack Administration Terminal Loop Back Test

Error Code	Test Result	Description/Recommendation
1000	ABORT	System resources required to run this test are not available.
2000	ABORT	Response to the test request was not received within the allowable time period.
2033	ABORT	Internal system error 1. Retry the command at 1-minute intervals a maximum of 5 times.

Continued on next page

Table 10-264. TEST #274 Duplication Interface Circuit Pack Administration Terminal Loop Back Test — *Continued*

Error Code	Test Result	Description/Recommendation
	FAIL	The tested UART on the Duplication Interface circuit pack is defective. 1. If this is Duplication Interface circuit pack A, then the circuit pack must be replaced to restore duplication. If this is Duplication Interface circuit pack B, then this failure has no real impact on the system. However, since this Duplication Interface circuit pack can never be used in the A carrier, it should be replaced at some point. 2. Follow the procedures for replacing Common Control circuit packs, and replace the Duplication Interface circuit pack. 3. Rerun the test.
	NO BOARD	The Duplication Interface circuit pack has failed to handshake with either the active Maintenance/Tape Processor (in the case of Duplication Interface circuit pack A) or the Duplication Interface circuit pack A (in the case of Duplication Interface circuit pack B). 1. Refer to NO BOARD description for the Duplication Interface Circuit Pack Status Query Test (#315).
	PASS	The administration terminal UART on the Duplication Interface circuit pack is good. This implies that Duplication Interface circuit pack A should be able to communicate with the administration terminal. This implies that Duplication Interface circuit pack B has a good UART. If there are problems bringing up the administration terminal, check the following: 1. Verify the terminal is connected to the connector labeled **DOT** on the back of carrier A and that the connector is securely fastened. 2. Verify the terminal is set up for 9600 baud. 3. If the terminal still does not work, replace the administration terminal.

Duplication Interface Circuit Pack SPE A Loop Back Test (#275)

This test loops data back through the UART used to communicate with Maintenance/Tape Processor A. The data is generated by the Duplication Interface circuit pack processor and is looped through the UART. The test is done entirely on the Duplication Interface circuit pack. The test passes if the data sent matches the data received. This test does not check the physical serial channel that is printed on the backplane or carried by the ICC.

Table 10-265. TEST #275 Duplication Interface Circuit Pack SPE A Loop Back Test

Error Code	Test Result	Description/Recommendation
1000	ABORT	System resources required to run this test are not available.
2000	ABORT	Response to the test request was not received within the allowable time period.
2033	ABORT	Internal system error 1. Retry the command at 1-minute intervals a maximum of 5 times.
	FAIL	The tested UART on the Duplication Interface circuit pack is defective. 1. If this is Duplication Interface circuit pack A, then the circuit pack must be replaced to restore duplication. If this is Duplication Interface circuit pack B, then this failure has no real impact on the system. However, since this Duplication Interface circuit pack can never be used in the A carrier, it should be replaced at some point. 2. Follow general procedures for replacing Common Control circuit packs, and replace the Duplication Interface circuit pack. 3. Rerun the test.
	NO BOARD	The Duplication Interface circuit pack has failed to handshake with either the active Maintenance/Tape Processor (in the case of Duplication Interface circuit pack A) or the Duplication Interface circuit pack A (in the case of Duplication Interface circuit pack B). 1. Refer to NO BOARD description for the Duplication Interface Circuit Pack Status Query Test (#315).
	PASS	The SPE A UART on the Duplication Interface circuit pack is good. This implies that Duplication Interface circuit pack A should be able to communicate with SPE A. This implies that Duplication Interface circuit pack B has a good UART.

Duplication Interface Circuit Pack SPE B Loop Back Test (#276)

This test loops back data through the UART used to communicate with Maintenance/Tape Processor B. The data is generated by the Duplication Interface circuit pack processor and is looped through the UART. The test is done entirely on the Duplication Interface circuit pack. The test passes if the data sent matches the data received. This test does not check the physical serial channel that is printed on the backplane or carried by the ICC.

Table 10-266. TEST #276 Duplication Interface Circuit Pack SPE B Loop Back Test

Error Code	Test Result	Description/Recommendation
1000	ABORT	System resources required to run this test are not available.
2000	ABORT	Response to the test request was not received within the allowable time period.
2033	ABORT	Internal system error 1. Retry the command at 1-minute intervals a maximum of 5 times.
	FAIL	The tested UART on the Duplication Interface circuit pack is defective. 1. If this is Duplication Interface circuit pack A, then the circuit pack must be replaced to restore duplication. If this is Duplication Interface circuit pack B, then this failure has no real impact on the system. However, since this Duplication Interface circuit pack can never be used in the A carrier, it should be replaced at some point. 2. Replace the Duplication Interface circuit pack. 3. Rerun the test.
	NO BOARD	The Duplication Interface circuit pack has failed to handshake with either the active Maintenance/Tape Processor (in the case of Duplication Interface circuit pack A) or with Duplication Interface circuit pack A (in the case of Duplication Interface circuit pack B). 1. Refer to NO BOARD description for the Duplication Interface Circuit Pack Status Query Test (#315).
	PASS	The SPE B UART on the Duplication Interface circuit pack is good. This implies that Duplication Interface circuit pack A should be able to communicate with SPE B. This implies that Duplication Interface circuit pack B has a good UART.

Duplication Interface Circuit Pack Sanity Maze Test (#277)

This test tests the Duplication Interface circuit pack processor's ability to write through the maze circuit. The Sanity Maze is a piece of circuitry on the Duplication Interface circuit pack that the Duplication Interface circuit pack Processor must write through to get access to leads controlled by the Duplication Interface circuit pack (Tone-Clock Select Lead, 80286 Processor circuit pack Select Leads, etc.). This maze circuitry ensures that the processor on the Duplication Interface circuit pack is sane before any of these leads are changed. The Duplication Interface processor is instructed to write bit patterns through the maze circuit. The Duplication Interface processor examines the output of the maze circuit and compares it with the input.

Table 10-267. TEST #277 Duplication Interface Circuit Pack Sanity Maze Test

Error Code	Test Result	Description/Recommendation
1000	ABORT	System resources required to run this test are not available.
2000	ABORT	Response to the test request was not received within the allowable time period.
2033	ABORT	Internal system error 1. Retry the command at 1-minute intervals a maximum of 5 times.
	FAIL	The Sanity Maze Circuit or the processor on the Duplication Interface circuit pack is defective, which implies the Duplication Interface circuit pack can no longer be relied upon to control and support a High or Critical Reliability system. The Duplication Interface circuit pack needs to be replaced. 1. Follow general procedures for replacing Common Control circuit packs and replace the Duplication Interface circuit pack. 2. Rerun the test.
	NO BOARD	The Duplication Interface circuit pack has failed to handshake with either the active Maintenance/Tape Processor (in the case of Duplication Interface circuit pack A) or with Duplication Interface circuit pack A (in the case of Duplication Interface circuit pack B). 1. Refer to NO BOARD description for the Duplication Interface Circuit Pack Status Query Test (#315).
	PASS	The Duplication Interface circuit pack Sanity Maze is good. This implies that Duplication Interface circuit pack can correctly control the SPE Select and Tone-Clock Lead.

Inter-Duplication Interface Circuit Pack Loop Back Test (#280)

This test loops back data through the UART used to communicate with the other Duplication Interface circuit pack. The data is generated by the Duplication Interface circuit pack processor and is looped through the UART. The test is done entirely on the Duplication Interface circuit pack. The test passes if the data sent matches the data received. This test does not check the physical serial channel that is printed on the backplane or carried by the ICC.

Table 10-268. TEST #280 Inter-Duplication Interface Circuit Pack Loop Back Test

Error Code	Test Result	Description/Recommendation
1000	ABORT	System resources required to run this test are not available.
2000	ABORT	Response to the test request was not received within the allowable time period.
2033	ABORT	Internal system error 1. Retry the command at 1-minute intervals a maximum of 5 times.
	FAIL	The tested UART on the Duplication Interface circuit pack is defective. 1. Replace the Duplication Interface circuit pack. 2. Rerun the test.
	NO BOARD	The Duplication Interface circuit pack B has failed to reply to handshaking either from Duplication Interface circuit pack A. 1. Refer to NO BOARD description for the Duplication Interface Circuit Pack Status Query Test (#315).
	PASS	The Inter-DUPINT UART on the tested Duplication Interface circuit pack is good.

Duplication Interface Circuit Pack Status Query Test (#315)

This test is used to detect the presence of Duplication Interface circuit packs A and B. To determine the status of Duplication Interface circuit pack B, a query is sent to the Duplication Interface circuit pack A. To determine the status of Duplication Interface circuit pack A, a query is sent to the Maintenance/Tape Processor on the active carrier. The response to either query indicates the status of the handshake to the appropriate Duplication Interface circuit pack.

Table 10-269. TEST #315 Duplication Interface Circuit Pack Status Query Test

Error Code	Test Result	Description/Recommendation
1000	ABORT	System resources required to run this test are not available. 1. Retry the command at 1-minute intervals a maximum of 5 times.
2000	ABORT	The software timed out waiting for the reply message. 1. Rerun the test. 2. If the message times out again, then continue to the next step. If the query fails with a NO BOARD, then refer to NO BOARD on the next page of this table. 3. No response is being received from the Duplication Interface circuit pack or Maintenance/Tape Processor. If Duplication Interface circuit pack A is under-test, then check for and resolve all alarms against the active PR-MAINT (Maintenance/Tape Processor). If Duplication Interface circuit pack B is under test, then enter the **test dup a** system technician command and resolve problems with Test #315 for Duplication Interface circuit pack A first. 4. Rerun the test. If it still aborts, then a problem may exist with one of the serial links. If carrier B is active or Duplication Interface circuit pack B is under test, then the serial link to get to Duplication Interface circuit pack B is being carried by the ICC. Check for damage to the ICC, and verify that all four connectors for the ICC are plugged in. If the ICC has to be replaced, the system must be powered down. 5. If the ICC is not the problem, then that portion of the serial link wired into carrier A and/or carrier B may be defective, and the carrier pack may need to be replaced.
2033	ABORT	Internal system error 1. Retry the command at 1-minute intervals a maximum of 5 times.

Continued on next page

Table 10-269. TEST #315 Duplication Interface Circuit Pack Status Query Test — *Continued*

Error Code	Test Result	Description/Recommendation
	FAIL	The handshake to one of the Duplication Interface circuit packs has stopped. The circuit pack may be defective or communication to the circuit pack is hampered. 1. Look in the Hardware Error Log for error types against TAPE. If TAPE error types are present, resolve them since TAPE error types can cause Test #315 to fail. Refer to TAPE Maintenance documentation for recommended repair strategy. 2. After any TAPE error types are resolved, issue the **test duplication-interface** command on the suspect Duplication Interface circuit pack. If Test #315 fails on Duplication Interface A, Duplication Interface A is defective. Replace the Duplication Interface A circuit pack. If Test #315 fails on Duplication Interface B, Duplication Interface circuit pack A or Duplication Interface circuit pack B may be defective. In this case, it is necessary to determine which Duplication Interface circuit pack (A or B) is the defective one. To do this, issue the **test duplication-interface A** command. If Test #280 fails on Duplication Interface A, (and Test #315 has just failed on Duplication Interface B), Duplication Interface circuit pack A is defective and should be replaced. If Test #280 passes on Duplication Interface A (and Test #315 has just failed on Duplication Interface B), replace the Duplication Interface circuit pack B. 3. Reissue the **test duplication-interface** command on the Duplication Interface circuit pack that was replaced. If Test #315 still fails, check for problems with the Inter-Carrier Cables (ICCs). If any of the ICCs is defective, replace it. 4. Rerun the test.
	NO BOARD	The Duplication Interface circuit pack has failed to handshake with either the active Maintenance/Tape Processor (in the case of Duplication Interface circuit pack A) or with Duplication Interface circuit pack A (in the case of Duplication Interface circuit pack B). 1. Follow the FAIL directions above.
	PASS	The tested Duplication Interface circuit pack is present and sane enough to handshake.

E-DIG-BD (Multi Application Platform Board)

MO Name (in Alarm Log)	Alarm Level	Initial Command to Run[1]	Full Name of MO
DIG800-BD	MIN	test board PCSS sh	MO800DIG-BD
DIG800-BD	WRN	test board PCSS sh	MO800DIG-BD

1 Where P is the port network number (1 for PPN and 2 or 3 for EPN); C is the carrier designation (for example, A, B, C, or D); and SS is the address of the slot in the carrier where the circuit pack is located (for example, 01, 02, ...).

The maintenance strategy for E-DIG-BD is the same as the one described for XXX-BD. Maintenance testing of the common circuit pack is handled by on-board firmware and SPE controlled tests. Maintenance software queries the firmware for error and alarm information, status, and test results. The firmware automatically reports error conditions that will result in SPE-controlled testing.

Board Insertion

The switch makes an additional board query if any of the following circuit packs are inserted:

Circuit Pack	Vintage
TN754	49
TN556	49, 80 or greater
TN800	any

For any of the above initial board up-links, the switch sends queries requesting additional data from the board for administration purposes, while also telling the board the switch software release and the system type.

For the native mode, the response to the board query downlink messages consists of several CCMS uplink messages that identify the true board code, vintage, suffix, emulation type, and the number of reserved slots it needs.

Hyperactivity

The common circuit pack is considered “hyperactive” if the service dispatcher receives 200 up-link messages from the circuit pack in a 10-second period. Since MAPD has 32 ports, the hyperactivity limit is increased to 500 up-link messages per 10seconds. An alarm is issued and the board taken out of service when the limit reaches 400 or when it hits 500 up-link messages in 10 seconds.

LED Use

The LED Control message 038x requests the Angel to drive the Red, Yellow, and Green LEDs on the face plate of typical port board on or off. On the MAPD, only the Red LED is controlled by this message. Yellow and Green change requests received from the switch by the MAPD drive LCD behavior rather than LED behavior. The switch continues to send the same LED control messages to the MAPD that it currently sends to all other port boards. The MAPD will handle proper interpretation of these messages. You should note that the PC on the MAPD, as well as the switch itself, can control the LEDs and the LCD on the MAPD.

Port Administration

In administration without hardware, the switch allows administration of up to 32 MAPD ports of any port type. If the port type later reported by the board does not match the existing type, the switch assumes the board is a MAPD board with a different configuration and rejects the board. MAPD_DCP_STA and MAPD_ ASAI_STA are the only two types of terminals are allowed on a MAPD board. Therefore, while administering ports on MAPD using **add station form**, it will allow only the terminals mentioned above.

NOTE:
Refer to XXX-BD (Common Port Circuit Pack) maintenance documentation for circuit pack level errors. See also DIG-LINE maintenance documentation for related line information.

E-DIG-RES (TN800 reserve slot)

See ASAI-RES.

E-DIG-STA (Emulated Digital Line)

MO Name (in Alarm Log)	Alarm Level	Initial Command to Run[1]	Full Name of MO
E-DIG-STA	MINOR	test port PCSSpp l	Emulated Digital St.
E-DIG-STA	WARNING	test port PCSSpp sh	Emulated Digital St.

1 Where P is the port network number (1 for PPN and 2 or 3 for EPN); C is the carrier designation (for example, A, B, C, or D); and SS is the address of the slot in the carrier where the circuit pack is located (for example, 01, 02, ...).

There are 4 tests in the Emulated Digital Line station maintenance test sequence and only one test path in the test sequence. Once the test sequence is started, all tests in the test sequence are executed.

E-DIG-ST maintenance monitors and tests ports on the TN800 MAPD circuit pack and the hardware connected to those ports for lines administered as a digital station. These include stations with an emulated digital voice terminal and stations with an emulated digital voice terminal and a linked data module. Stand-alone data modules and data adaptors in stand-alone mode are not supported by the TN800 circuit pack. Circuit pack maintenance is covered by E-DIG-BD.

Hardware Error Log Entries and Test to Clear Values

Table 10-270. Digital Line Error Log Entries

Error Type	Aux Data	Associated Test	Alarm Level	On/Off Board	Test to Clear Value
0[1]	0	Any	Any	Any	test port PCSSpp sh r 1
18 (a)	0	busyout port PCSSpp	WNG	OFF	rel port PCSSpp
130 (b)		None	WNG	ON	test port PCSSpp sh
1793 (c)		Voice and Control Local Loop Test (#13)	MIN/ WNG[2]	ON	test port PCSSpp l r 3
2049 (d)		NPE Crosstalk Test (#9)	MIN/ WNG[2]	ON	test port PCSSpp l r 3
2305 (e)	32770	None			
3840 (f)	40965	None			
3841 (g)	41029	None			
2304 (h)		None			

1 Run the Short Test Sequence first. If all tests pass, run the Long Test Sequence. Refer to the appropriate test description and follow the recommended procedures.

2 Major alarms may be downgraded to Warning alarms based on the value used in the **set options** command.

Notes:

a. Maintenance personnel has busied out the port in question. Make sure that the port is released from busyout by using the **release port PCSSpp** command.

b. The circuit pack has been removed or has been insane for more than 21 minutes. To clear the error, reinsert or replace the circuit pack.

c. The local loop test failed. Each failure increments the counter by 1 when the local loop test fails. The counter is decremented when the loop test passes. When the counter reaches a threshold of 3, an on-board MINOR alarm is raised. This is the code that is generated when the link between the circuit pack and the voice terminal is successfully reset. No technician action is necessary.

d. The NPE Cross talk test failed. The counter is incremented by 1 when the NPE Cross talk test fails. The counter is decremented by 1 when the NPE Cross talk test passes. When the counter reaches a threshold of 3, an on-board MINOR alarm is raised and the board is taken out of service.

e. The station went off-hook while it was in the ready-for-service state. Use the **status station** command to determine the state of the station. The off-hook should have moved the station to ready-for-service. No technician action is necessary.

f. No terminal is connected to the Digital Line board. No maintenance action is required.

g. The circuit pack's message buffer is full. This may be caused by having many display phones with heavy traffic connected to the circuit pack. No action is necessary.

h. Internal system error; no action is necessary. The error counters 1, 2, 3, 4, 5, 6, 10, 11, 12, 13, 14, 15, and 16 do not have any significance for this MO.

System Technician-Demanded Tests: Descriptions and Error Codes

Always investigate tests in the order presented in the table below when inspecting errors in the system. By clearing error codes associated with the Voice and Control Channel Local Loop Around Test, for example, you may also clear errors generated from other tests in the testing sequence.

Order of Investigation	Short Test Sequence	Long Test Sequence	D/ ND[1]
Voice and Control Channel Local Loop Around Test (#13)		X	D
NPE Crosstalk Test (#9)		X	ND
Station Lamp Updates Test (#16)		X	ND

1 D = Destructive; ND = Nondestructive

Digital Line NPE Crosstalk Test (#9)

One or more Network Processing Elements (NPEs) reside on each circuit pack with a TDM Bus interface. The NPE controls port connectivity and gain and provides conferencing functions on a per-port basis. The NPE Crosstalk Test verifies that this port's NPE channel talks on the selected time slot and never crosses over to time slots reserved for other connections. If the NPE is not working correctly, one-way and noisy connections may be observed. This test is part of a port's Long Test Sequence and takes about 20 to 30 seconds to complete. Crosstalk testing occurs on both the primary information channel (voice) and the secondary information channel (data) associated with each digital station port. If this test fails on either channel, the station and the DTDM are taken out-of-service.

Table 10-271. TEST #9 Digital Line NPE Crosstalk Test

Error Code	Test Result	Description/Recommendation
1	ABORT	During testing of the primary information channel, system resources may not have been available or the port was busy during the test. 1. Check the port status. Use the **display port PCSSpp** command to determine the station extension of the port. Use the **status station** command to determine the service state of the port. If the service state indicates that the port is in use, then the port is unavailable for this test. You will have to wait until the port is idle. 2. If the port status is idle, then retry the command at 1-minute intervals a maximum of 5 times.
2	ABORT	During testing of DTDM, system resources may not have been available or he port was busy during the test. 1. Check if port is being used. If possible, disconnect by toggling the disconnect button on DTDM. Retry the command after 1 minute. **CAUTION:** *This action drops the call in progress.*

Continued on next page

Table 10-271. TEST #9 Digital Line NPE Crosstalk Test — *Continued*

Error Code	Test Result	Description/Recommendation
1000	ABORT	System resources required to run this test are not available. The port may be busy with a valid call. Use **display port PCSSpp** to determine the station extension or attendant number of the port. Use **status station** or **status attendant** to determine the service state of the port. If the service state indicates that the port is in use, then the port is unavailable for certain tests. You must wait until the port is idle before retesting. Attendants are always in use (off-hook) if the handset is plugged in and the port is not busied out. 1. If the port status is idle, then retry the command at 1-minute intervals a maximum of 5 times.
1001	ABORT	System resources required to run this test are not available. 1. Retry the command at 1-minute intervals a maximum of 5 times.
1002	ABORT	The system could not allocate time slots for the test. The system is under heavy traffic conditions or has time slots out-of-service due to TDM-BUS errors. Refer to TDM-BUS to diagnose any active TDM-BUS errors. 1. If system has no TDM-BUS errors and is not handling heavy traffic, repeat test at 1-minute intervals a maximum of 5 times.
1003	ABORT	The system could not allocate a tone receiver for the test. The system is oversized for the number of Tone Detectors present, or some Tone Detectors are out-of-service. 1. Look for TTR-LEV errors in the Error Log. If present, refer to TTR documentation. 2. Look for TONE-PT errors in the Error Log. If present, refer to TONE-PT documentation. 3. If neither condition exists, retry the command at 1-minute intervals a maximum of 5 times.

Continued on next page

Table 10-271. TEST #9 Digital Line NPE Crosstalk Test — *Continued*

Error Code	Test Result	Description/Recommendation
1004	ABORT	The port was seized by a valid call during the test. 1. Use **display port PCSSpp** to determine the station extension or attendant number of the port. 2. Use **status station** or **status attendant** to determine the service state of the port. If the service state indicates that the port is in use, then the port is unavailable for certain tests. 3. Wait until the port is idle before retesting. Attendants are always in use (off-hook) if the handset is plugged in and the port is not busied out.
1020	ABORT	Test disabled by background testing. Use the **status station** command to determine when the station is available for testing.
2000	ABORT	Response to the test request was not received within the allowable time period. 1. Retry the command at 1-minute intervals a maximum of 5 times.
1 2	FAIL	The Network Processing Element (NPE) of the tested port is transmitting in error. This causes noisy and unreliable connections. Failure code 1 indicates that the Crosstalk test failed on the primary channel. Failure code 2 indicates that the Crosstalk test failed on the secondary channel. 1. Replace the circuit pack.
	PASS	The port is correctly using its allocated time slots. 1. To ensure that this is not an intermittent problem, repeat this test a maximum of 10 times. 2. If complaints persist, examine the station, connections, and wiring.

Voice and Control Channel Local Loop Test (#13)

These tests check the information and control channels between the Switch Processing Element (SPE) and the Digital Line port circuit. The SPE sends a message to loop around both the information and control channels for the port. First, the primary information (voice) channel loopback test sends a digital count from the Tone-Clock circuit pack on the primary information channel time slot and receives the same digital count with a general purpose tone detector.

While the primary information channel is still looped around, the Control Channel Loop Around Test sends four different transparent patterns to the on-board microprocessor, receives them back, and compares them.

The Loop Around Test for the secondary information (data) channel is the same as the primary information channel loop around test and is performed only if a DTDM is administered.

Next, a Conference Test checks the primary information channel. This test is the same as Conference Test #6.

The four tests will generate only one resulting value (Pass, Fail, or Abort). If any test fails or aborts, the test sequence stops.

Table 10-272. TEST #13 Voice and Control Channel Local Loop Test

Error Code	Test Result	Description/Recommendation
	ABORT	Internal system error 1. Retry the command at 1-minute intervals a maximum of 5 times.
1000	ABORT	System resources required to run this test are not available. The port may be busy with a valid call. Use **display port PCSSpp** to determine the station extension or attendant number of the port. Use **status station** or **status attendant** to determine the service state of the port. If the service state indicates that the port is in use, then the port is unavailable for certain tests. Wait until the port is idle before retesting. Attendants are always in use (off-hook) if the handset is plugged in and the port is not busied out. 1. If the port status is idle, then retry the command at 1-minute intervals a maximum of 5 times.
1001	ABORT	System resources required to run this test are not available. 1. Retry the command at 1-minute intervals a maximum of 5 times.

Continued on next page

Table 10-272. TEST #13 Voice and Control Channel Local Loop Test — *Continued*

Error Code	Test Result	Description/Recommendation
1002	ABORT	The system could not allocate time slots for the test. The system is under heavy traffic conditions or it has time slots out-of-service due to TDM-BUS errors. Refer to TDM-BUS to diagnose any active TDM-BUS errors. 1. If system has no TDM-BUS errors and is not handling heavy traffic, repeat test at 1-minute intervals a maximum of 5 times.
1003	ABORT	The system could not allocate a tone receiver for the test. The system is oversized for the number of Tone Detectors present, or some Tone Detectors are out-of-service. 1. Look for TTR-LEV errors in the Error Log. If present, refer to TTR-LEV documentation. 2. Look for TONE-PT errors in the Error Log. If present, refer to TONE-PT documentation. 3. If neither condition exists, retry the command at 1-minute intervals a maximum of 5 times.
1004	ABORT	The port was seized by a valid call during the test. The test has been aborted. Use the **display port PCSSpp** command to determine the station extension or attendant number of the port. Use **status station** or **status attendant** to determine the service state of the port. If the service state indicates that the port is in use, then the port is unavailable for certain tests. Wait until the port is idle before retesting. Attendants are always in use (off-hook) if the handset is plugged in and the port is not busied out. 1. Retry the command at 1-minute intervals a maximum of 5 times. 2. If the test continues to abort and the port is not in use, escalate the problem.
2000	ABORT	Response to the test request was not received within the allowable time period.
2100	ABORT	Could not allocate the necessary system resources to run this test. 1. Rerun the test at 1-minute intervals a maximum of 5 times.

Continued on next page

Table 10-272. TEST #13 Voice and Control Channel Local Loop Test — *Continued*

Error Code	Test Result	Description/Recommendation
7	FAIL	Conference Test failed on primary channel. In some cases, users may not notice disruption in service. In extreme cases, conferencing feature may not work at all.
14	FAIL	The primary voice channel is not transmitting properly. User impact may range from noticing nothing to not being able to use this port.
15	FAIL	The control channel between the processor and digital circuit pack is not transmitting properly. User impact may range from noticing nothing to not being able to use the port. This could disrupt other users.
16	FAIL	The secondary voice channel is not transmitting properly. User impact may range from noticing nothing to not being able to use this port. 1. Run circuit pack tests to check the Tone Generator circuit pack and the Tone Detector circuit pack using the **test board PCSSpp** command. 2. Resolve any problems that are detected on the Tone Generator circuit pack or Tone Detector circuit pack. 3. If the Tone Generator and Tone Detector circuit packs are functioning properly and the test still fails, replace the Digital Line circuit pack.
	PASS	The test passed, and all channels are transmitting properly. 1. To ensure that this is not an intermittent problem, repeat this test up to 10 times. 2. If noisy connections for voice or corrupted data for data transfer persist, examine the station, connections, and wiring.

Station Lamp Updates Test (#16)

This test lights all lamps on the terminal as specified. The lamp updates will run only if the station is in-service. The status of the station is checked and the lamp updates are blocked from taking place if the station is not in the in-service state. This test does not affect the status of the Message Waiting lamp.

Table 10-273. TEST #16 DIG-LINE Station Lamp Updates Test

Error Code	Test Result	Description/Recommendation
	ABORT	Internal system error 1. Retry the command at 1-minute intervals a maximum of 5 times.
1	ABORT	System technician may have busied out the port. 1. Look in the Error Log for Error Type 18 (port busied out) for this port. If this error type is present, then release the port with the **release station <extension>** command and run the test again. 2. Make sure that the terminal is connected. 3. Retry the command at 1-minute intervals a maximum of 5 times.
3	ABORT	Station may be in ready-for-service or out-of-service state. 1. Use the **status station** command to verify state of station. 2. Make sure the terminal is connected. 3. Retry the command at 1-minute intervals a maximum of 5 times.
1000	ABORT	System resources required to run this test are not available. The port is busy with a valid call. Use **display port PCSSpp** to determine the station extension or attendant number of the port. Use **status station** or **status attendant** to determine the service state of the port. If the service state indicates that the port is in use, then the port is unavailable for certain tests. Wait until the port is idle before retesting. Attendants are always in use (off-hook) if the handset is plugged in and the port is not busied out. 1. If the port status is idle, then retry the command at 1-minute intervals a maximum of 5 times.

Continued on next page

Table 10-273. TEST #16 DIG-LINE Station Lamp Updates Test — *Continued*

Error Code	Test Result	Description/Recommendation
1392	ABORT	This is currently a TTI port, and the test cannot execute on it. 1. Verify that the port is a TTI port using either the **display port** command (the display shows that the port is a TTI port) or the **list config** command (the display shows a `t` for the port). 2. If either **list config** or **display port** indicates that the port is *not* a TTI port, escalate the problem. If both commands indicate that the port is a TTI port, the abort is correct, and no action is necessary.
	FAIL	Internal system error 1. Retry the command at 1-minute intervals a maximum of 5 times.
	PASS	The message to light all of the station lamps was sent successfully to the port. 1. Observe the station lamps being lit when running the test. If all lamps do not light successfully, the other Digital Line test results may indicate related problems that will not allow the lamps to light. 2. Investigate by using other Digital Line port tests and by examining the station, wiring, and connections.

EMG-XFER

Emergency Transfer (SCC Cabinets)

MO Name (in Alarm Log)	Alarm Level	Initial Command to Run[1]	Full Name of MO
EMG-XFER	MAJOR	test environment P	Emergency Transfer
EMG-XFER	WARNING	test environment P	Emergency Transfer

1 Where P is an appropriate port network number determined via the PORT field from the Alarm or Error Log.

The system provides the ability to cut designated analog phones through to CO trunks if the switch cannot provide even minimal phone service. This ability is known as Emergency Transfer. Each port network PPN and EPN can have a separate Emergency Transfer capability. The EMG-XFER MO tracks the control of Emergency Transfer. There is one EMG-XFER MO for each port network. Emergency Transfer can be controlled by the system or can be manually controlled within each port network via the Emergency Transfer switch(es) which is (are) located on the Processor circuit pack and the EPN Maintenance circuit pack. If the Emergency Transfer switch or switches in a high or critical reliability system on the Processor circuit pack or EPN Maintenance circuit pack are in a manual position, the system cannot change the state of Emergency Transfer within that port network. A manual ON position (to the right) generates a Major alarm. A manual OFF position (to the left) generates a Warning alarm. Unless a technician is currently working on the system, the switches should be left in the auto position ().

On a high or critical reliability system, the switches on BOTH Processor circuit packs must be in the ON position to manually invoke Emergency Transfer. However, if EITHER switch is in the OFF position, Emergency Transfer cannot be controlled by the system and is in the manual OFF state. The **status system** system technician command displays the current state of the Emergency Transfer switches in the system. Valid states for the switches are: *manual ON, manual OFF, auto ON* (the switch is in the auto position and the system has invoked Emergency Transfer), or (the switch is in the auto position and the system has invoked Emergency Transfer), or *auto OFF* (the switch is in the auto position and the system has not invoked Emergency Transfer).

Error Log Entries and Test to Clear Values

Table 10-274. Emergency Transfer Error Log Entries

Error Type	Aux Data	Associated Test	Alarm Level	On/Off Board	Test to Clear Value
0[1]	0	Any	Any	Any	test environment P sh r 1
1	Any	Emergency Transfer Query (#124)	MAJOR	ON	test environment P r 3
257	0	Emergency Transfer Query (#124)	WARNING	ON	test environment P r 3

1 Run the Short Test Sequence first. If all tests pass, run the Long Test Sequence. Refer to the appropriate test description and follow the recommended procedures.

System Technician-Demanded Tests: Descriptions and Error Codes

Always investigate tests in the order presented in the following tables. By clearing error codes associated with the *Battery & Battery Charger Query Test,* for example, you may also clear errors generated from other tests in the testing sequence. For example, you may also clear errors generated from other tests in the testing sequence.

Single Carrier System

Order of Investigation	Short Test Sequence	Long Test Sequence	D/ND[1]
Power Query Test (#79) (a)	X	X	ND
Emergency Transfer Query Test (#124)	X	X	ND
External Alarm Lead Query Test (#120) (b)	X	X	ND
Analog Ring Generator Initialization Test (#117) (c)	X	X	ND
Analog Ring Generator Query Test (#118) (c)	X	X	ND

1 D = Destructive; ND = Nondestructive

Notes:

a. Refer to “DC-POWER” for a description of this test.

b. Refer to “EXT-DEV” for a description of this test.

c. Refer to “RING-GEN” for a description of this test.

NOTE:
These tests only show up in the test sequence if there is a TN768 Tone-Clock Board in the port network being tested.

Emergency Transfer Query Test (#124)

This test queries the hardware for the state of the Emergency Transfer switch (or switches in a High or Critical Reliability system) and reports the result. If the switch(es) is (are) in a position where the system software can control Emergency Transfer, then the test passes. If the switch(es) is (are) in a position where the system software cannot control Emergency Transfer, then the test fails. In the PPN, the Maintenance/Tape Processor controls Emergency Transfer and, in the EPN, the EPN Maintenance circuit pack controls Emergency Transfer. The system software does not have control of Emergency Transfer within a cabinet if the switch(es) is (are) in the manual ON or manual OFF state for that cabinet.

Table 10-275. TEST #124 Emergency Transfer Query Test

Error Code	Test Result	Description/Recommendation
1000	ABORT	System resources required to run this test are not available. 1. Retry the command at 1-minute intervals a maximum of 5 times.
2000	ABORT	Response to the test request was not received within the allowable time period. 1. Retry the command at 1-minute intervals a maximum of 5 times. 2. If the test continues to ABORT with error code 2000, check for system powering problems with the A carrier (PPN or EPN). Resolve all DC-POWER alarms. Then, repeat the test. 3. If the test continues to ABORT with a 2000 error code, check for and resolve all DUPINT (Duplication Interface) errors in a PPN for a high or critical reliability system, or MAINT (EPN Maintenance circuit pack) errors in an EPN. Repeat the test.

Continued on next page

Table 10-275. TEST #124 Emergency Transfer Query Test — *Continued*

Error Code	Test Result	Description/Recommendation
2029	ABORT	Internal system error 1. Retry the command at 1-minute intervals a maximum of 5 times.
1	FAIL	Emergency Transfer is manually turned OFF via the Emergency Transfer switch(es).
2	FAIL	Emergency Transfer is manually turned ON via the Emergency Transfer switch(es). 1. Place the switch (or switches in a PPN for a High or Critical Reliability system) in the AUTO position.
	PASS	The system software has control of Emergency Transfer within this port network. If Emergency Transfer is invoked, then there can be a Major alarm in the system that is invoking Emergency Transfer. The following table lists the error types and MOs that may cause Emergency Transfer. If any or all of these errors appear in the log, then refer to the appropriate Maintenance documentation and resolve those problems first. If none of these errors appear in the log, then check the Emergency Transfer hardware. Specifically, on the EPN, if Emergency Transfer is invoked while call processing is permitted, verify that the current limiter card (982LS) is in the correct slot on the backplane. If the current limiter card is not in the correct slot, move it to the correct location and rerun this test.

Table 10-276. Test #124 Error Log Entries That Cause Emergency Transfer

MO Name	Error Type	Aux Data
SW-CTL	1	
SW-CTL	2	
TONE-BD	1	0
TONE-BD	2305	0

EPN-SNTY (EPN Sanity Audit)

MO Name (in Alarm Log)	Alarm Level	Initial Command to Run	Full Name of MO
EPN-SNTY	None	None	EPN Sanity Audit

The EPN Sanity Audit feature enhances the system's ability to recover from failure conditions that disable an entire EPN. In such situations, not only is the affected EPN unable to provide service to the system, but the system itself has not detected the condition. The EPN Sanity Audit feature recognizes an EPN as unable to provide service when the software cannot receive control messages from EPN circuit packs. When such a failure is detected by the EPN Sanity Audit, a sequence of recovery actions is triggered to restore the EPN to service.

For a Standard system, the recovery sequence is as follows:

1. TDM Bus Switch
2. EPN Reset

For a duplicated system, the recovery sequence is as follows:

1. TDM Bus Switch
2. Expansion Interface Link Switch
3. Tone/Clock Switch within the EPN
4. EPN Reset

The EPN Sanity Audit feature activates only when all existing maintenance operations have failed to detect the EPN problem. Therefore, the EPN Sanity Audit serves as a safety net for the EPN.

NOTE:
It is not clear why certain types of EPN problems activate this feature. Thus, error log entries related to these problems do not specify which hardware to replace. The error log entries only indicate that some drastic recovery action occurred due to an unknown problem. However, clues as to the root cause of the EPN outage may be present in the Error Logs and the Alarm Logs of the following MOs: Switch Control (SW-CTL), TDM Bus (TDM-BUS), Expansion Interface (EXP-INTF), and TDM Bus Clock (TDM-CLK). Therefore, it is recommended that you refer to these maintenance sections during trouble shooting operations.

Hardware Error Log Entries and Test to Clear Values

Table 10-277. EPN-SNTY Error Log Entries

Error Type	Aux Data	Associated Test	Alarm Level	On/Off Board	Test to Clear Value
0[1]	0	Any			None
8801 (a)	Any	None			
8802 (b)	Any	None			
8803 (c)	Any	None			
8804 (d)	Any	None			
9901 (e)	Any	None			
9902 (f)	Any	None			
9903 (g)	Any	None			

1 Run the Short Test Sequence first. If all tests pass, run the Long Test Sequence. Refer to the appropriate test description and follow the recommended procedures.

Notes:

a. This error occurs whenever the EPN is unable to send up-link control messages and the control channel of the TDM Bus in the EPN has been switched as part of the recovery procedure.

b. This error occurs whenever the EPN is unable to send up-link control messages, and an EI link switch is invoked as part of the recovery procedure.

c. This error occurs whenever the EPN is unable to send up-link control messages and the EPN Tone-Clock is switched as part of the recovery procedure.

d. This error occurs whenever the EPN is unable to send up-link control messages and the EPN has been reset as part of the recovery procedure.

e. This error occurs whenever the EPN is unable to send up-link control messages, but recovers after the control channels of the TDM Bus in the EPN are switched.

f. This error occurs whenever EPN is unable to send up-link control messages, but recovers after the Expansion Interface Links to the EPN are switched.

g. This error occurs whenever the EPN is unable to send up-link control messages, but recovers after the active Tone-Clock in the EPN is switched.

ERR-LOG (Error Log)

MO Name (in Alarm Log)	Alarm Level	Initial Command to Run	Full Name of MO
ERR-LOG	none	none	Error Log

Functional Description

The ERR-LOG MO is responsible for the sanity of the Alarm Log, the Hardware Error Log, and the Software Error Log. If an inconsistency is detected in any one of these logs, all logs are re-initialized and a hardware error is logged against ERR-LOG indicating the time of inconsistency. There are no tests and no alarms for the Error Log MO. This MO exists solely for the purpose of allowing errors to be logged against it.

Hardware Error Log Entries and Test to Clear Values

Error Type	Aux Data	Associated Test	Alarm Level	On/Off Board	Test to Clear Value
0[1]	Any	Any	Any	Any	none
510 (a)	Any	none	none	none	none

1 Run the Short Test Sequence first. If all tests pass, run the Long Test Sequence. Refer to the appropriate test description and follow the recommended procedures.

Notes:

a. This error indicates that an inconsistency was detected in either the Alarm Log, the Hardware Error Log, or the Software Error Log. To recover from this error, all of the logs were cleared and re-initialized. Any alarms that were active at the time of this error have been cleared. There is no associated test for this error. If the error persists, escalate the problem.

   The Aux data value indicates when the inconsistency was found:

   0 Found during a periodic audit of the Error Log
   1 Found after an extended reboot
   2 Found after a reboot
   3 Found after a Reset System 3 (Cold_1)
   4 Found after a Reset System 2 (Cold_2)
   16 Found after a Warm Start
   100 Found after an internal software audit

ETH-PT (Control LAN Ethernet)

MO Name (in Alarm Log)	Alarm Level	Initial Command to Run[1]	Full Name of MO
ETH-PT	MAJOR	test port UUCSSpp long	MO_ETH_PT
ETH-PT	MINOR	test port UUCSSpp long	MO_ETH_PT
ETH-PT	WARNING	test port UUCSSpp	MO_ETH_PT

1 *UU* is the universal cabinet number (1 for PPN, 2 - 3 for EPNs). *C* is the carrier designation (A, B, C, D, or E). *SS* is the number of the slot in which the circuit pack resides (01 to 21). *pp* is the two digit port number (01, 02, etc).

The TN799 Control LAN (CLAN) packet port circuit pack provides TCP/IP connection to adjuncts applications such as CMS, Intuity, and DCS Networking. The CLAN circuit pack has one 10baseT Ethernet connection and up to 16 DS0 physical interfaces for PPP connections. Multiple CLAN circuit packs in a system gives additional TCP/IP capacity.

A remote socket control link (RSCL) links the CLAN and the SPE to pass call control and other management information. Since one link serves all the ports on the circuit pack, maintenance of the RSCL is part of the CLAN circuit pack maintenance.

NOTE:
The CLAN TN799 circuit pack replaces the PGATE and PI circuit packs in the G3r and G3si/G3vs systems, respectively. The PGATE or PI can be used with the CLAN to create an X.25-to-TCP/IP bridge for adjunct and DCS connections.

Control LAN Congestion Controls

The switch activates congestion controls on CLAN when it detects buffers exceeding the threshold. The switch releases the congestion controls when the CLAN reports that its buffer level has returned to normal levels.

If congestion:	Then the switch:
Persists for a 14-minute interval,	Raises MINOR alarm.
Exhausts buffers,	Raises MINOR alarm.
Ceases for 12 minutes,	Retires MINOR alarm.

Error Log Entries and Test to Clear Value

Table 10-278. ETH-PT Error Log Entries

Error Type	Aux Data	Associated Test	Alarm Level	On/Off Board	Test to Clear Value
0[1]	0	Any	Any	Any	test port UUCSSpp s
1 (a)	0	Ethernet Local Looparound Test (#1278)	MINOR	ON	test port UUCSSpp l r 3
513 (b)	0	Link Integrity Inquiry (#1282)	MINOR	OFF	test port UUCSSpp r 2
769 (c)	0		WNG	OFF	
1281 (d)	0				
1537, 1538 (e)		Session Status Test (#1286)	MINOR	OFF	
1793-1920 (f)					
2305-2560 (g)					
2561-2816 (g)					
3329 (h)		TCP/IP Ping Test (#1281)	WNG	OFF	

1 Run the Short Test Sequence first. If all tests pass, run the Long Test Sequence. Refer to the appropriate test description and follow the recommended procedures.

Notes:

a. **Error Type 1**: Ethernet Local Looparound Test (#1278) failed.

   1. Test the port (**test port UUCSSpp long**).
   2. Refer to repair procedures for Test #1278.

b. **Error Type 513**: Link Integrity Inquiry Test (#1282) failed or CLAN port detected loss of Ethernet link integrity.

   Possible causes:

   - Cabling
   - Ethernet transceiver

   1. Test the port (**test port UUCSSpp long**).
   2. If the Link Integrity Inquiry Test (#1282) fils, refer to its repair procedure.

c. **Error Type 769**: Port received invalid frame.

Invalid Ethernet frame errors occur when the frame

- Contains a bad Cyclic Redundancy Check (CRC)
- Is misaligned

1. Isolate the problem with the Ethernet Local Looparound Test (#1278).
2. Test the port (**test port UUCSSpp long**).
3. Verify the repair with the Ethernet Local Looparound Test (#1278).
4. Clear the alarm (**test port UUCSSpp long clear**).

d. **Error Type 1281**: System software received an indication that the far-end has requested a disconnect of a session on this link. This is a log-only error.

e. **Error Type 1537-1538**: Some or all sessions on a port are down.

If:	Then the switch:
Some sessions are down	Raises WARNING alarm on circuit pack
All sessions are down	Raises MINOR alarm on circuit pack

1. Test the port (**test port UUCSSpp short**).
2. Refer to Session Status Test (#1286) repair procedure to verify repair.

f. **Error Type 1793-1920**: system software received an indication that a socket was closed due to an error. Error Type indicates the application associated with this socket.

Error Type	Application
1793	Unused
1794	DCS
1795	AUDIX
1796	CMS
1797	ISDN Gateway
1798-1920	Reserved for future

Aux Data indicates the internal application number.

g. **Error Type 2305-2816**: System software detected a session is down. Aux Data indicates the session number. These are log only errors. Error types 2305-2560 are for session numbers 1-256. Error types 2561-2816 are for session numbers 257-512.

h. **Error Type 3329**: TCP/IP Ping Test failed.

1. Test port (**test port UUCSSpp short**).
2. Refer to TCP/IP Ping Test (#1281) repair procedures.

System Technician-Demanded Tests: Descriptions and Error Codes

Investigate errors in the order they appear in the table below.

Table 10-279. System Technician-Demanded Tests: ETH-PT

Order of Investigation	Short Test Sequence	Long Test Sequence	D/ND[1]
Ethernet Local Loop-Around Test (#1278)		X	D
TCP/IP Ping Test (#1281)	X	X	ND
Session Status Test (#1286)	X	X	ND
Link Integrity Inquiry Test (#1282)	X	X	ND

1 D = Destructive, ND = Non-destructive

Ethernet Local Looparound Test (#1278)

This test is destructive.

Use this test to check circuitry in the data path for an Ethernet call (from the on-board processor to the Ethernet Transceiver). This test fails if the data it receives does not match the data it transmits.

Table 10-280. TEST #1278 Ethernet Local Looparound Test

Error Code	Test Result	Description/Recommendation
1000	ABORT	The port is in use. 1. Determine status of port (**status clan-port UUCSSpp**). 2. Retry the command when the port is idle. The post may be forced to the idle state by executing a **busyout port UUCSS** command. **NOTE:** The busyout port command is destructive, causing all calls and links associated with the port to be torn down.
2000	ABORT	Did not receive circuit pack test response within the allowable time period. 1. If the problem persists, reset the circuit pack (**busyout board UUCSS, reset board UUCSS,** and **release board UUCSS**). 2. If the problem persists, replace the circuit pack.
2012	ABORT	Internal system error. 1. Retry the command at 1-minute intervals, up to 3 times. 2. If the problem persists, escalate the problem.
2100	ABORT	Could not allocate the necessary resources to run test. 1. Retry the command at 1-minute intervals, up to 5 times. 2. If the problem persists, escalate the problem.
1	FAIL	Circuit pack detected failure in the Ethernet Local Looparound Test (#1278). 1. If the problem persists, reset the circuit pack (**busyout board UUCSS, reset board UUCSS,** and **reset board UUCSS**). 2. If the problem persists, replace the circuit pack.
	PASS	The circuitry tests properly.

TCP/IP PING Test (#1281)

This non-destructive test fails if all the endpoints fail to respond. Use this test to check the circuitry in the data path for a peer-to-peer IP layer connection.

Table 10-281. TEST #1281 TCP/IP PING Test

Error Code	Test Result	Description/Recommendation
1, 2, 11	ABORT	Internal error 1. Retry the command at 1-minute intervals a maximum of 3 times. 2. If the problem persists, escalate the problem.
7	ABORT	Destination unreachable. 1. Verify that there is a destination to ping in the routing table (list ip-route and look for destinations reachable through this ethernet port). 2. If there are no reachable destinations from this port (i.e., no routes administered on ethernet), administer a route and retry. 3. Escalate if the problem persists.
1005	ABORT	Incorrect test configuration. 1. Verify Ethernet link is in service (**status port UUCSSpp** or **status link n**). 2. Verify that Ethernet link is enabled (**status port UUCSSpp** or **status link *n*** or **display data-module**). 3. Verify routing table has reachable destinations. 4. Repeat the test. 5. If problem persists while the Ethernet link is in service and enabled, escalate the problem.
1124	ABORT	Ethernet link is not enabled. 1. Verify that the Ethernet link is enabled (**status port UUCSSpp**, **status link *n***, or **display data-module**). 2. If the link is not enabled, enable the link (**change data-module**). 3. Repeat the test. 4. Escalate if the problem persists.

Continued on next page

Table 10-281. TEST #1281 TCP/IP PING Test — *Continued*

Error Code	Test Result	Description/Recommendation
1125	ABORT	Ethernet link not in service. 1. Verify Ethernet link is in service (**status port UUCSSpp** or **status link n**). 2. If the link is not in service, release the link using (**release link n** or **release port UUCSSpp**). 3. Repeat the test. 4. Escalate if the problem persists.
2000	ABORT	Did not receive circuit pack test response within the allowable time period. 1. Reset the circuit pack (**busyout board UUCSS, reset board UUCSS,** and **release board UUCSS**). 2. If the test fails again, replace the circuit pack.
2012	ABORT	Internal system error. 1. Retry the command at 1-minute intervals, up to 3 times. 2. Escalate if the problem persists.
2100	ABORT	Could not locate the necessary system resources to run this test. 1. Retry the command at 1-minute intervals, up to 5 times. 2. Escalate if the problem persists.
2500	ABORT	Internal system error. 1. Retry the command at 1-minute intervals, up to 3 times. 2. Escalate if the problem persists.

Continued on next page

Table 10-281. TEST #1281 TCP/IP PING Test — *Continued*

Error Code	Test Result	Description/Recommendation
1003	FAIL	Ping to the destination failed due to on-board problem. 1. Retry the command at 1-minute intervals, up to 3 times. 2. If the problem persists, reset the circuit pack (**busyout board UUCSS**, r**eset board UUCSS**, and **release board UUCSS**). 3. If the problem persists, re-administer the ethernet connection through a different ethernet port, if available. 4. If the problem still persists, or if there are no other available ethernet ports, replace the circuit pack.
1007	FAIL	Ping to the destination failed due to the destination down. 1. Verify that at least one destination reachable through this port is up. Ping this destination (ping ip-address xxx.xxx.xxx.xxx). 2. If the ping to any destination is successful through this port, the link is up, although some destinations are unreachable. Ignore the failure. 3. If ping to all destinations fail, test this port (**test port UUCSSpp short**) and follow repair procedures for Session Status Test (#1286) failures.
	PASS	TCP/IP Ping Test (#1281) is successful.

Link Integrity Inquiry Test (#1282)

This non-destructive test queries the CLAN Ethernet port's physical connections.

If:	Then the test:
CLAN connection is present,	Passes.
CLAN connection is absent,	Fails.
There is no response,	Aborts.

Table 10-282. TEST #1282 Link Integrity Inquiry Test

Error Code	Test Result	Description/Recommendation
1124	ABORT	Ethernet link is not enabled. 1. Verify that the Ethernet link is enabled (**status port UUCSSpp**, **status link *n***, or **display data-module**). 2. If the link is not enabled, enable the link (**change data-module**). 3. Repeat the test. 4. Escalate if the problem persists.
1125	ABORT	Ethernet link not in service. 1. Verify whether Ethernet link is in service (**status port UUCSSpp** or **status link n**). 2. If the Ethernet link is not in service, release the link (**release link n** or **release port UUCSSpp**). 3. Repeat the test. 4. Escalate if the problem persists.
1959	ABORT	Downlink message error. 1. Retry the command at 1-minute intervals, up to 3 times. 2. Escalate if the problem persists.
2012	ABORT	Internal system error. 1. Retry the command at 1-minute intervals, up to 3 times. 2. Escalate if the problem persists.
2100	ABORT	Could not locate the necessary system resources to run this test. 1. Retry the command at 1-minute intervals, up to 5 times. 2. Escalate if the problem persists.

Continued on next page

Table 10-282. TEST #1282 Link Integrity Inquiry Test — *Continued*

Error Code	Test Result	Description/Recommendation
2500	ABORT	Internal system error. 1. Retry the command at 1-minute intervals, up to 3 times. 2. Escalate if the problem persists.
	FAIL	Link integrity lost due to problem with attachment of Ethernet cable to the port. 1. Repeat the test. 2. If the test fails, verify that the cable properly is secured to Ethernet port and to the bus. 3. Verify the CLAN circuit pack link integrity LED is glowing. 4. Retry the test. 5. If problem persists, refer to Ethernet Local Looparound Test (#1278) repair procedures.
	PASS	The Ethernet Link Integrity Test (#1282) detects good connections.

Session Status Test (#1286)

This non-destructive test determines the status of all Ethernet port sessions. This test queries the system software on port session status.

If the system software indicates that:	Then the switch:
All port sessions are up (ALL UP)	Raises no alarm, or retires alarm
Some port sessions are up (SOME UP)	Raises WARNING alarm
All port sessions are down (ALL DOWN)	Raises MINOR alarm

Table 10-283. TEST #1286 Session Status Test

Error Code	Test Result	Description/Recommendation
1124	ABORT	Ethernet link is not enabled. 1. Verify that the Ethernet link is enabled (**status port UUCSSpp**, **status link *n***, or **display data-module**). 2. If the link is not enabled, enable the link (**change data-module**). 3. Repeat the test. 4. Escalate if the problem persists.
1125	ABORT	Ethernet link not in service. 1. Verify whether Ethernet link is in service (**status port UUCSSpp** or **status link n**). 2. If the Ethernet link is not in service, release the link (**release link n** or **release port UUCSSpp**). 3. Repeat the test. 4. Escalate if the problem persists.
2000	ABORT	Did not receive circuit pack test response within the allowable time period. 1. If the problem persists, reset the circuit pack (**busyout board UUCSSpp**, **reset board UUCSS**, and **release board UUCSS**). 2. If the problem persists, replace the circuit pack.
2100	ABORT	Could not locate the necessary system resources to run this test. 1. Retry the command at 1-minute intervals, up to 5 times. 2. Escalate if the problem persists.
2500	ABORT	Internal system error. 1. Retry the command at 1-minute intervals, up to 3 times. 2. Escalate if the problem persists.

Continued on next page

Table 10-283. TEST #1286 Session Status Test — *Continued*

Error Code	Test Result	Description/Recommendation
1	FAIL	System software indicates at least one Ethernet link session is down (SOME UP). 1. Isolate downed sessions (**status port UUCSSpp** or **status link n**). 2. Follow actions based on session information.
2	FAIL	System software indicates all Ethernet sessions are down (ALL DOWN). 1. Test the port (**test port UUCSSpp**) to verify the Ethernet Local Looparound Test (#1278) result. 2. If test passes, wait for system software to indicate ALL UP. 3. If the test fails, check the destination and other components in the path. 4. If the destination and other components in the path are in-service, take action based on session information.
	PASS	All sessions are up.

ETR-PT (Enhanced Tone Receiver Port)

MO Name (in Alarm Log)	Alarm Level	Initial Command to Run[1]	Full Name of MO
ETR-PT(a)	MAJOR	test port PCSSpp sh	Enhanced Tone Receiver Port
ETR-PT	MINOR	test port PCSSpp sh	Enhanced Tone Receiver Port
ETR-PT	WARNING	test port PCSSpp sh	Enhanced Tone Receiver Port

1 P is the port network number (1 for PPN, 2 - 3 for EPNs). C is the carrier designation (A, B, C, D, or E). SS is the number of the slot in which the circuit pack resides (01 to 21).

NOTE:
Replacing the tone/clock circuit pack requires a special procedure which is described in the documentation for TONE-BD. This section also describes the LED display for this board.

The TN2182 is a combined Tone Generator/Tone Detector board. It provides 8 Enhanced Tone receiver (ETR) ports. Each of these ports provides the functions previously found individually on DTMR-PTs, GPTD-PTs and CLAS-PTs ports. Thus each port on the TN2182 may be used for any tone detection function that was previously done by TN748, TN420 or TN744 Tone detection boards.

The TN2182 provides Mu-law or A-law tone detection capability.

Since the TN2182 also provides Tone/Clock function only one (or two if your system is duplicated) TN2182 circuit packs may be present in a port network. Thus if more tone detection resources are needed, the additional resources must be provided by TN748, TN420 or TN744 circuit packs.

Hardware Error Log Entries and Test to Clear Values

Table 10-284. Enhanced Tone Receiver Port (ETR-PT) Error Log Entries

Error Type	Aux Data	Associated Test	Alarm Level	On/Off Board	Test to Clear Value
1	any	Tone Detector Audit/Update Test (#43)	MAJOR/ MINOR (a)	ON	test port PCSSpp r 2
18		busyout port	WARNING	OFF	release port PCSSpp
257 (b)	17666	Tone Detection Audit Update Test (#43)	MAJOR/ MINOR (a)	ON	test port PCSSpp r 3
513 (c)	any	Tone Detection Verification Test (#42)	MAJOR/ MINOR (a)	ON	test port PCSSpp r 3

Notes:

a. There are two possible alarm levels for this error type: major alarm and minor alarm. These alarm levels are dependent on the administered thresholds for TTR, CPTR and CCTR. Each ETR port is capable of operating an any of these.

   A major alarm is raised if the total number of ports capable of TTR, CPTR or CCTR detection currently in-service is less than or equal to 1/2 of the administered TTR, CPTR or CCTR threshold number.

   Otherwise, a minor alarm is raised. In either case, run the short test sequence against the port (ETR-PT) and follow the error code procedures for the individual tests.

   The threshold number of ports for service is administered using the **change system-parameters maintenance** command.

   1. Use **list configuration carrier** to get the board type and location. If the board is TN744, then do Steps 2-4; if it is TN2182, do Steps 5-12.
   2. Execute 3 commands: **busyout board UUCSS**, **reset board UUCS**S, and **release board UUCSS**. Reset is required to reload RAM associated with the TN744's DSPs. This will take all 8 tone detector ports out of service for a few seconds. Only 4 of the 8 would be out of service due to the alarm. (There are 4 tone detectors on each of the two DSPs.) Other than the unlikely potential of running out of tone detector resources in the switch, there is no other effect when the board is reset.
   3. Test the board (**test board UUCSS long**).

4. If the test passes, terminate the repair process. If the test fails, replace the board.
5. Check to see if the board is duplicated (**list cabine**t and **status port-network** on the affected port network.)
6. If the board is not duplicated, use test tone UUCSS long to resolve the error. The long test resets the board and is required to reload on-board RAM associated with the TN2182"s DSPs. The effect is that tone detectors are taken out of service momentarily and tones are removed from the TDM bus for about 10 seconds. This means no dial or touch tones during this interval, which probably will not affect calls in progress, but could cause a call origination to abort or cause a user to not get dial tone when going off hook.
7. If all tests pass and the alarm does not resolve, retest (**test tone UUCSS long clear**).
8. If the test passes, terminate the repair process. If it fails, replace the circuit pack at the customer's convenience.
9. If the board is duplicated, switch to the standby side (**set tone**).
10. Test the alarmed board (test tone UUCSS long). This resets the board and is required to reload on-board RAM associated with the TN2182's DSPs.
11. If all tests pass and the alarm does not resolve, retest with **test tone UUCSS long clear**.
12. If the test passes, terminate the repair process. If it fails, replace the board.

b. The ETR-PT lost its translation. Testing the ETR-PT is sufficient to reload its translation. If testing the ETR port does not clear the error, then the TN2182 circuit pack containing the defective ETR port should be replaced at a time when it is convenient to remove a clock board from the system. Follow the procedures described in the TONE-BD section for replacing a tone/clock circuit pack.

c. This error indicates the (ETR-PT) Enhanced Tone Receiver port is having problems detecting touch tones, call progress or MFC tones. If this error type is persistently logged, then the TN2182 circuit pack containing the defective ETR-PT should be replaced at a time it is convenient to remove a clock board from the system. Follow the procedures described in the TONE-BD section for replacing a tone/clock circuit pack.

d. The ETR-PT lost its translation. Testing the ETR-PT is sufficient to reload its translation. If testing the ETR port does not clear the error, then the TN2182 circuit pack containing the defective ETR port should be replaced at a time when it is convenient to remove a clock board from the system. Follow the procedures described in the TONE-BD section for replacing a tone/clock circuit pack.

System Technician-Demanded Tests: Descriptions and Error Codes

Always investigate tests in the order presented in the following tables when inspecting errors in the system. By clearing error codes associated with the *Tone Detection Verification Test*, for example, you may also clear errors generated from other tests in the testing sequence.

Order of Investigation	Short Test Sequence	Long Test Sequence	D/ND[1]
Tone Detection Verification Test (#42)	X	X	ND
Tone Detection Audit/Update Test (#43)	X	X	ND

1 D = Destructive; ND = Nondestructive

Tone Detection Verification Test (#42)

This test checks out a single ETR port in the touch-tone receiver mode MFC tone detection/generation mode and general purpose tone detection mode. During the first portion of the test, the touch-tone receiver mode is tested. Then general purpose call progress and maintenance tones are tested and lastly MFC tones are tested.

Table 10-285. TEST #42 Tone Detection Verification Test

Error Code	Test Result	Description/Recommendation
none	ABORT	The system was not able to allocate all the resources needed for this test OR there was an Internal System Error.
1	ABORT	The system could not allocate all the resources needed to test the tones.
1001	ABORT	The system was unable to put the ETR-PT in the appropriate mode to test it.
1002	ABORT	The system could not allocate time slots for the test connection. This situation could occur when the system is heavily loaded. If the system is not heavily loaded, then test the TDM-BUS via the **test tdm** command. Refer to TDM-BUS for details. 1. Retry the command at 1-minute intervals a maximum of 5 times.

Continued on next page

Table 10-285. TEST #42 Tone Detection Verification Test — *Continued*

Error Code	Test Result	Description/Recommendation
1003	ABORT	The system could not allocate a Tone-Clock for the test connection. This may be caused by a heavy load on the system or by a faulted Tone-Clock. 1. Check to see if there are any alarms against the Tone-Clock in the port network where the test aborted. If so refer to the recommended procedures for TONE-BD or TONE-PT. 2. If a new Tone-Clock has been inserted, allow about 1 minute for maintenance to run on the newly inserted circuit pack. 3. Retry the command at 1-minute intervals a maximum of 5 times.
2000	ABORT	Circuit Pack's response to the test request was not received within the allowable time period. 1. Retry the command at 1-minute intervals a maximum of 5 times.
2006	ABORT	This abort code indicates that the active Tone-Clock circuit pack or a Tone Detector circuit pack may not be functioning properly. On G3r V2 systems, this abort can also be caused by a mismatch between the companding mode administered for the system and that of the Tone Detector circuit pack. 1. [G3 V2] Make sure that the companding mode of the system matches that of the Tone Detector: mu-law for TN748; A-law for TN420. 2. Test the *active* Tone-Clock circuit pack in the port network with the **test tone-clock** PC command and refer to the TONE-BD section for failures. 3. Retry the command at 1-minute intervals a maximum of 5 times.
2100	ABORT	Could not allocate the necessary system resources to run this test. 1. Retry the command at 1-minute intervals a maximum of 5 times.

Continued on next page

Table 10-285. TEST #42 Tone Detection Verification Test — *Continued*

Error Code	Test Result	Description/Recommendation
1-122	FAIL	DTMF digits were not detected correctly. 1. Run the short test sequence via the **test port** PCSSpp **sh r 1** command. 2. If the problem persists, the system is still operating properly but capacity will be reduced. To restore performance to normal, replace the circuit pack containing the defective ETR-PT (Enhanced Tone Receiver Port). Follow the procedures described in the TONE-BD section for replacing a tone/clock circuit pack.
102	FAIL	2225 Hz Modem Answer Tone was not detected correctly. This will impact call-classification operation. 1. Run the short test sequence via the **test port** PCSSpp sh r 1 command. 2. If the problem persists, the system can still operate properly but capacity will be reduced. In order to restore performance to normal, replace the circuit pack containing the defective port. Follow the procedures described in the TONE-BD section for replacing a tone/clock circuit pack.
130	FAIL	Forward or Backward MFC signals were not correctly generated or detected. This will impact MFC calls. 1. Run the short test sequence via the **test port** PCSSpp sh r 1 command. 2. If the problem persists, the system can still operate properly but capacity will be reduced. In order to restore performance to normal, replace the TN2182 circuit pack containing the defective ETR-PT. Follow the procedures described in the TONE-BD section for replacing a tone/clock circuit pack.
	PASS	Tone Detection Verification is successful. The ETR Port is able to detect/generate all necessary tones.

Tone Detector Audit/Update Test (#43)

A Digital Signal Processor sanity audit is performed on the ETR-PT.

Table 10-286. TEST #43 Tone Detector Audit/Update Test

Error Code	Test Result	Description/Recommendation
none	ABORT	The system was not able to allocate all the resources needed for this test. 1. Wait 1 minute, and repeat the command a maximum of 5 times.
2000	ABORT	Response to the test request was not received within the allowable time period.
2100	ABORT	Could not allocate the necessary system resources to run this test. 1. Retry the command at 1-minute intervals a maximum of 5 times.

Continued on next page

Table 10-286. TEST #43 Tone Detector Audit/Update Test — *Continued*

Error Code	Test Result	Description/Recommendation
	FAIL	Hardware audit failed. 1. Use **list configuration carrier** to get the board type and location. If the board is TN744, then do Steps 2-4; if it is TN2182, do Steps 5-12. 2. Execute 3 commands: **busyout board UUCSS**, **reset board UUCS**S, and **release board UUCSS**. Reset is required to reload RAM associated with the TN744's DSPs. This will take all 8 tone detector ports out of service for a few seconds. Only 4 of the 8 would be out of service due to the alarm. (There are 4 tone detectors on each of the two DSPs.) Other than the unlikely potential of running out of tone detector resources in the switch, there is no other effect when the board is reset. 3. Test the board (**test board UUCSS long**). 4. If the test passes, terminate the repair process. If the test fails, replace the board. Follow the procedures in TONE-BD. 5. Check to see if the board is duplicated (**list cabine**t and **status port-network** on the affected port network.) 6. If the board is not duplicated, use test tone UUCSS long to resolve the error. The long test resets the board and is required to reload on-board RAM associated with the TN2182"s DSPs. The effect is that tone detectors are taken out of service momentarily and tones are removed from the TDM bus for about 10 seconds. This means no dial or touch tones during this interval, which probably will not affect calls in progress, but could cause a call origination to abort or cause a user to not get dial tone when going off hook.

Continued on next page

Table 10-286. TEST #43 Tone Detector Audit/Update Test — *Continued*

Error Code	Test Result	Description/Recommendation
		7. If all tests pass and the alarm does not resolve, retest (**test tone UUCSS long clear**). 8. If the test passes, terminate the repair process. If it fails, replace the circuit pack at the customer's convenience. Follow the procedures in TONE-BD. 9. If the board is duplicated, switch to the standby side (**set tone**). 10. Test the alarmed board (test tone UUCSS long). This resets the board and is required to reload on-board RAM associated with the TN2182's DSPs. 11. If all tests pass and the alarm does not resolve, retest with **test tone UUCSS long clear**. 12. If the test passes, terminate the repair process. If it fails, replace the board. Follow the procedures in TONE-BD.
	PASS	The ETR Port has passed the sanity inquiry.

EXP-INTF (Expansion Interface Circuit Pack)

MO Name (in Alarm Log)	Alarm Level	Initial Command to Run[1]	Full Name of MO
EXP-INTF	MAJOR	test board PCSS sh	Expansion Interface Circuit Pack
EXP-INTF	MINOR	test board PCSS sh	Expansion Interface Circuit Pack
EXP-INTF	WARNING	test board PCSS sh	Expansion Interface Circuit Pack

1 Where P is the port network number 1, 2, or 3, C is the carrier designation (for example, A, B, C, or D); and SS is the address of the slot in the carrier where the circuit pack is located (for example, 01, 02, etc).

CAUTION:
A detailed flowchart for isolating and resolving Packet Bus faults is included in Chapter 9, "Packet Bus Fault Isolation and Correction". This flowchart, along with the other information presented in the chapter, can help in resolving problems relevant to the Packet Path of the TN570 Expansion Interface. Whenever the repair procedures for this Maintenance Object refer to Packet Bus and/or Packet Control maintenance, be sure to reference Chapter 9, "Packet Bus Fault Isolation and Correction" in addition to the relevant MO documentation.

The TN570 or the TN776 Expansion Interface circuit pack is used to provide connectivity between the Processor Port Network (PPN) and either Expansion Port Network (EPN) (network 2 or 3) or between the two Expansion Port Networks. The TN776 Expansion Interface is used in G1 systems to provide connectivity between the Processor Port Network and the (single) Expansion Port Network. This connectivity is provided via a 32 Mbps fiber optic cable. The TN776 supports circuit-switched connections and the control channel to and from the EPN. The TN570 also supports packet-switched connections for those systems that use the Packet Bus. The TN776 and TN570 circuit packs must only be used in matched pairs. A TN776 circuit pack does not function if connected via fiber to a TN570 circuit pack and vice versa.

The EPN(s), if present, are always under the control of the TN777 Processor circuit pack in the PPN. Therefore, if the Expansion Interface circuit packs to the EPN are not functioning correctly, service may be unavailable in that EPN, but is available in the PPN. If the Expansion Interface circuit packs between EPNs are not functioning properly, there is service in all networks, but connectivity between EPN and EPN is not available.

A system with EPN(s) may have one or two pairs of Expansion Interface circuit packs connecting any two cabinets. If two pairs exist, one pair operates as the Active pair and provides the required connectivity. The second pair acts as a hot Standby. When a problem arises on the Active pair, the Standby pair may be called upon to take over and provide continuous service with stable calls being preserved. The Expansion Interface circuit packs must be inserted into fixed slots. The valid slots for Expansion Interface circuit packs are: 1A01, 1A02, 1B01, 1B02, 2A01, 2A02, 2B02, 2B03, 3A01, 3A02, 3B02, or 3B03. It is also a requirement that the fiber cables be connected according to the following table:

Table 10-287. Expansion Interface Circuit Pack Connections

EXP-INTF in slot	connected to EXP-INTF in slot	Description
1A01	2A01	Network 1 to Network 2
1B01	2B02	Network 1 to Network 2 (Duplicated Link)
1A02[1]	3A01	Network 1 to Network 3
1B02[1]	3B02	Network 1 to Network 3 (Duplicated Link)
2A02[1]	3A02	Network 2 to Network 3
2B03[1]	3B03	Network 2 to Network 3 (Duplicated Link)

1 G3iV1.1-286 and G3iV2-386 only.

NOTE:
If Expansion Interface circuit packs are connected in any other way, they do not function properly.

The Active Expansion Interface Link may be selected by system technician via the **set expansion-link PCSS** command, where PCSS is the address of either Standby Expansion Interface circuit pack. System Technician may prevent the system from switching Expansion Interface Links by using the **busyout board PCSS** command, where PCSS is the address of either Standby Expansion Interface circuit pack. These two commands are described later in greater detail in the “Expansion Interface Link Switch Command” section (located at the end of this EXP-INTF Maintenance documentation).

A G3MT terminal connected to an EPN [G3i] provides the same maintenance and administrative capabilities as the local administration terminal, but at a slower transmission speed. The EPN Maintenance circuit pack also provides Emergency Transfer and environmental monitoring functions for the EPN.

The abbreviations have the following meanings:

- **PROC** The TN773 Processor circuit pack (the Active TN773 Processor circuit pack in a High or Critical Reliability system)
- **NETCON** The SW-CTL portion of the Network Control circuit pack (the Active Network Control circuit pack in a High or Critical Reliability system)
- **TDM BUS** The Time Division Multiplex Bus that connects circuit packs within a cabinet
- **EXP-INTF** The Expansion Interface (EXP-INTF) circuit pack
- **FIBER** The optical fiber used to connect Expansion Interface circuit packs
- **MAINT** EPN Maintenance (MAINT) circuit pack
- **PKT-BUS** The Packet Bus used to carry ISDN-BRI signalling information
- **MGR 1** The local administration terminal

To determine which Expansion Interface Link is active and which is standby for each Expansion Interface pair, the **status system** command can be used. Alternately, visual inspection shows that the Active Expansion Interface circuit packs have the yellow LED on solid or blink a pattern two seconds on, 200 milliseconds off. The Standby Expansion Interface circuit packs have the yellow LEDs off.

Condition	LED on	LED off
Fiber Out-of-Frame (a)	0.1 second	0.1 second
In frame, No Neighbor (b)	0.5 second	0.5 second
Expansion Interface Active (c)	2 second	0.2 second
Expansion Interface Active (d)	solid on	never off
Expansion Interface Standby (e)	never on	solid off

Notes:

a. This flashing code corresponds to error codes 769 and 770 from the Hardware Error Log and indicates a failure of Test #238. These error codes are usually accompanied by error code 1281 (no Expansion Interface detected on opposite end of fiber). This condition may be caused by the absence of the opposite end Expansion Interface circuit pack, a broken or missing fiber, or a missing lightwave transceiver on either Expansion Interface circuit pack.

b. This flashing code corresponds to error code 1281 from the Hardware Error Log and indicates a failure of Test #237. This condition is usually due to a failed Expansion Interface circuit pack on the opposite end of the fiber.

c. This is the normal state for an EPN Active Expansion Interface circuit pack that is also the bus master in the EPN.

d. This is the normal state for an Active Expansion Interface circuit pack that is not the bus master. It is also the state of the TN776 Expansion Interface circuit pack immediately after circuit pack initialization when the system has not yet assigned a role to it (that is, Active or Standby). To distinguish between these two situations, use the **status system** command. If the link which contains this Expansion Interface circuit pack is in-service (up), the Expansion Interface circuit pack is active; if it is out-of-service (down), the Expansion Interface circuit pack is neither active nor standby.

e. This is the normal state for a Standby Expansion Interface circuit pack. It is also the state of the TN570 Expansion Interface circuit pack immediately after circuit pack initialization when the system has not yet assigned a role to it (that is, Active or Standby). To distinguish between these two situations, use the **status system** command. If the link which contains this Expansion Interface circuit pack is in-service (up), the Expansion Interface circuit pack is standby; if it is out-of-service (down), the Expansion Interface circuit pack is neither active nor standby.

When testing Expansion Interface circuit packs to investigate problems, tests should always be run on both circuit packs of an Expansion Link. This provides a better indication of where a problem is located. Hardware errors for all Expansion Interface circuit packs (EXP-INTF) may be displayed by using the category “infc” on the Display Errors form.

In the EPN, the EPN TN775 Maintenance (MAINT) circuit pack monitors the sanity of the Expansion Interface circuit pack. If the Expansion Interface circuit pack should cycle between sane and insane several times, the Maintenance circuit pack holds the Expansion Interface circuit pack reset. If a new Expansion Interface circuit pack is installed in the EPN, the EPN Maintenance circuit pack should be removed because it may attempt to hold the new Expansion Interface circuit pack reset. The Maintenance circuit pack may be reinstalled after the Expansion Interface circuit pack has been inserted and the Expansion Interface circuit pack’s red LED has gone off.

The Active Expansion Link is also involved in synchronization between the two cabinets. The Expansion Interface circuit pack reports slip errors if the two cabinets are not correctly synchronized. When diagnosing synchronization problems, the Expansion Interface circuit packs should be examined as a possible cause.

Relationship Between Expansion Interface and Tone-Clock Circuit Packs

The Expansion Interface fiber link depends on the system clock that is provided by the Active Tone-Clock circuit pack on each network. (See TDM-CLK and TONE-BD Maintenance documentation.) Each Expansion Interface circuit pack transmits over the fiber at a rate derived from the system clock on its network. If the Active Tone-Clock is defective to the point where the system clock frequency it produces is out of the specified range ("out of spec"), an Expansion Interface Link might go down even though the Expansion Interface circuit packs are healthy. In a High or Critical Reliability system, both links could go down if there is a defective Active Tone-Clock.

Whether or not a link goes down, depends on certain characteristics of the Expansion Interface circuit packs. An Expansion Interface circuit pack should not be replaced if the link on which it resides goes down because of a defective Active Tone-Clock circuit pack. The defective Tone-Clock circuit pack should be replaced instead. The Expansion Interface circuit packs are more sensitive to a defective system clock than the rest of the components of the system. Therefore, testing of the Tone-Clock circuit pack might not reveal a problem.

The symptoms of the problem in which an invalid system clock causes an Expansion Link to go down are as follows:

1. If the Active PPN Tone-Clock circuit pack is providing an invalid system clock:
   a. The EPN Expansion Interface circuit pack yellow LED blinks quickly.

      (Fiber Out-of-Frame condition).

      If the EPN is up, Test #238 fails on this Expansion Interface circuit pack.

   b. The PPN Expansion Interface circuit pack yellow LED blinks slowly.

      (In-frame, No Neighbor condition).

      Test #237 fails on this Expansion Interface circuit pack, but Test #238 passes.
2. If the EPN Tone-Clock circuit pack is providing an invalid system clock:
   a. The PPN Expansion Interface circuit pack yellow LED blinks quickly

      (Fiber Out-of-Frame condition).

      Test #238 fails on this Expansion Interface circuit pack.

   b. The EPN Expansion Interface circuit pack yellow LED blinks slowly

      (In-frame, No Neighbor condition).

      If the EPN is in-service, Test #237 fails on this Expansion Interface circuit pack, but Test #238 passes.

These symptoms can also be the result of other problems (for example, one half of the fiber being unable to transmit data). If the system exhibits these symptoms, execute the following procedure:

1. Verify that the EPN stays down for at least one minute.

   If the Expansion Interface Link comes back in service after a short time, without switching the Active Tone-Clock, the problem probably was the on-line synchronization source became invalid (see SYNC Maintenance documentation for more information).

   However, if the Expansion Interface Link(s) has not come back into service after one minute, the synchronization source is not the cause of the problem. Proceed to Step 2.

2. Check for errors via the **display errors** command with the Category field set to “tone” and the Active alarms field set to “n.” Some of the alarms on EPN objects might have been resolved if the EPN went down. Refer to the appropriate MO Maintenance documentation for descriptions of any of the errors occurring at about the same time as the EXP-LINK errors. Resolve any active alarms. Also, if Error Type 18 was logged against the SYNC MO when the EPN went down, the problem was probably that the synchronization on-line reference became invalid. Since reference switching was disabled, the Tone-Clock did not switch from the invalid reference. Therefore, the Tone-Clock circuit pack put out a system clock that was “out of spec.” Issue the **enable synchronization-switch** command. If the EPN is down, reseat the Tone-Clock circuit packs on the EPN. This action should restore the EPN to service.

   Execute Steps 3 and 4 in the order most convenient to you and least destructive to the customer.

3. Check if the fiber optic cable is transmitting properly via the following procedure on one of the out-of-service links:

   a. Carefully record the symptoms (yellow LED pattern and tests failing) that were occurring on the PPN Expansion Interface circuit pack and the EPN Expansion Interface circuit pack. Clearly indicate which symptoms are occurring on which Expansion Interface circuit pack.

   WARNING:
   Before proceeding, note which is the current transmit fiber and which is the current receive fiber for proper reconnection.

   b. Disconnect the transmit and receive fiber pair from the lightwave transceiver on the back of the PPN Expansion Interface circuit pack slot (see Figure 10-30 on page 10-657).

   c. Connect what was formerly the transmit fiber to the receive jack.

   d. Connect what was formerly the receive fiber to the transmit jack.

e. Perform Steps b, c, and d on the opposite end of the fiber and the lightwave transceiver on the back of the EPN Expansion Interface circuit pack slot.

NOTE:
If it is more convenient for you, execute Steps b, c, and d on the EPN Expansion Interface circuit pack first.

f. If the symptoms which were formerly occurring on the PPN Expansion Interface circuit pack are now occurring on the EPN Expansion Interface circuit pack and vice versa, the fiber is defective and should be replaced.

4. Determine if the problem is due to a defective Active Tone-Clock circuit pack. Refer to the preceding list of symptoms to decide which network contains the suspect Active Tone-Clock. See Warning.

WARNING:
If you remove the EPN Expansion Interface circuit pack that is active or that was active when the EPN was last in-service, then the 2A/3A Tone-Clock circuit pack becomes the Active Tone-Clock. This characteristic can be deceiving. Replacing or reseating the Active EPN Expansion Interface circuit pack might restore the Expansion Interface Links temporarily. However, if the 2B/3B Tone-Clock circuit pack was really the source of the problem and not the Expansion Interface circuit pack, then the Expansion Interface Link(s) goes down again the next time a Tone-Clock switch to the 2B/3B Tone-Clock is attempted (probably when the scheduled Tone-Clock switch occurs).

WARNING:
If, after all the Expansion Interface Links are restored, you suspect the problem might have been due to a defective Tone-Clock circuit pack, switch to this Tone-Clock at an appropriate time. If the Tone-Clock circuit pack was the cause of the problem and the same Expansion Interface circuit packs are in place, the same Expansion Interface Link(s) goes down again.

a. On a High or Critical Reliability system in which the network containing the suspect Tone-Clock circuit pack is in-service:

Switch to the Standby Tone-Clock on this network. If the suspect Tone-Clock circuit pack is defective, the Expansion Interface Link(s) should be restored to service at this point. Switching back to the defective Tone-Clock should make the same Expansion Interface Link(s) go out-of-service. Such a Tone-Clock circuit pack is defective and should be replaced as soon as possible. If switching Tone-Clocks does not bring up the EPN, then this Tone-Clock is not the source of the problem. Make sure to switch back to the original Tone-Clock.

WARNING:
If the defective Tone-Clock circuit pack is left as the Standby Tone-Clock, then a scheduled Tone-Clock switch causes the same Expansion Link(s) to go out-of-service again.

b. On a system in which the EPN containing the suspect Tone-Clock circuit pack is out-of-service:

   Replace the Active Tone-Clock circuit pack on this network. In a High or Critical Reliability system, the Active Tone-Clock is the Tone-Clock circuit pack whose yellow LED is: 1) blinking and 2) blinking slower if both Tone-Clocks have blinking yellow LEDs. If the Expansion Interface Link(s) comes up after replacing this Tone-Clock circuit pack, then this Tone-Clock circuit pack should be replaced as soon as possible. See Warning.

WARNING:
If the defective Tone-Clock circuit pack is left as the Standby Tone-Clock, then a scheduled Tone-Clock switch causes the same EPN to go out-of-service again.

   If replacing the Active Tone-Clock did not bring up the Expansion Interface Link(s), then this Tone-Clock circuit pack is not the source of the problem.

c. On a standard system in which the PPN contains the suspect Tone-Clock circuit pack:

   Replace the PPN Tone-Clock circuit pack **at a time when bringing down the system is most convenient to the customer**.

WARNING:
Replacing the PPN Tone-Clock circuit pack stops call processing on that network and also brings down stable calls. This action eventually causes a Reset System 2 (Cold 2 restart).

   If replacing the Tone-Clock circuit pack restores the Expansion Interface Link(s), then the Tone-Clock circuit pack is defective and should be replaced. Otherwise, the problem is not with the PPN Tone-Clock circuit pack.

Expansion Interface Manual Loop Back Procedure

This procedure is to be used when an Expansion Interface circuit pack cannot be tested by software. This is usually when the Expansion Interface circuit pack is in the EPN and the EPN is down. A spare length of fiber jumper cable is required for this procedure.

If this procedure is run on both Expansion Interface circuit packs of a link, and both check out fine, then the failure is most likely in the fiber itself if neither Expansion Interface circuit pack is busied out, but the link remains inactive.

1. Busyout the Expansion Interface circuit pack using the **busyout board PCSS** command.
2. Disconnect the transmit and receive fiber pair from the lightwave transceiver on the back of the Expansion Interface circuit pack slot. **Note which is the transmit fiber and which is the receive fiber for proper reconnection at the end of this procedure.**
3. Using a spare fiber jumper cable, interconnect the transmit and receive jacks of the lightwave transceiver as shown in Figure 10-29 on page 10-770 on the following page.
4. Go to the front of the cabinet and inspect the yellow LED.
   - If the yellow LED is on steady, this Expansion Interface circuit pack and the lightwave transceiver are functioning properly.
   - If the yellow LED is off, reseat the circuit pack. For the TN776, if the yellow LED comes on steady after the red LED has gone off, the Expansion Interface circuit pack and the lightwave transceiver are functioning properly. For the TN570 [G1V5], if the yellow LED is off steady after the red and green LEDs have gone off, the Expansion Interface circuit pack and the lightwave transceiver are functioning properly.
   - If the yellow LED flashes on at a rate of once per second, the Expansion Interface circuit pack or transceiver should be replaced.
   - If the yellow LED flashes on at a rate of 5 times per second, the Expansion Interface circuit pack or the lightwave transceiver may need replacement. This condition may also be due to a faulty system clock on the network containing this Expansion Interface circuit pack. Refer to the procedure described in the preceding “Relationship Between Expansion Interface and Tone-Clock Circuit Packs” on page 10-651 section for further details.
5. Replace faulty component(s) and reconnect the original fiber. Be sure to reconnect the fibers properly as noted in Step 3.
6. Release Expansion Interface circuit pack with **release board PCSS**.

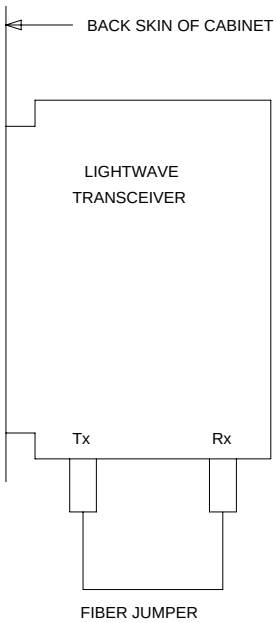

Figure 10-29. Interconnection of Lightwave Transceiver Transmit/Receive Jacks

Error Log Entries and Test to Clear Values

Table 10-288. Expansion Interface Circuit Pack Error Log Entries

Error Type	Aux Data	Associated Test	Alarm Level	On/ Off Board	Test to Clear Value
0[1]	0	Any	Any	Any	test board PCSS
1	Any	Expansion Interface Local TDM Loop Around Test (#240)	MAJ	ON	test board PCSS r 2
2		Expansion Interface Local TDM Loop Around Test (#240)	MAJ	ON	test board PCSS r 2
18 (a)	0	busyout board PCSS	WNG	OFF	release board PCSS
23 (b)	0	None	WNG	OFF	
125 (c)		None	MIN	ON	
131 (d)		None	MINOR/ WNG[2]	OFF	

Continued on next page

Table 10-288. Expansion Interface Circuit Pack Error Log Entries — *Continued*

Error Type	Aux Data	Associated Test	Alarm Level	On/ Off Board	Test to Clear Value
257 (e)	Any	None	MINOR/ WNG[2]	OFF	
513 (f)	5-7	None	MAJ	ON	
769	113	Expansion Interface FOOF Query Test (#238)	WRN	OFF	test board PCSS r 1
770		Expansion Interface FOOF Query Test (#238	WRN	OFF	test board PCSS r 1
1025	Any	Expansion Interface Control Channel Test (#316)	MAJ	ON	test board PCSS r 1
1281		Expansion Interface Neighbor Query Test (#237)	MINOR/ WNG[2]	OFF	test board PCSS r 1
1537		Expansion Interface 2-way Transmission Test (#241)	MAJ	OFF	test board PCSS r 4
1538 (g)		None	MIN	ON	
1793		Expansion Interface Lightwave Transceiver Loop Around Test (#242)	MAJ	ON	test board PCSS l r 1
2049 (h)	Any	Reset Test (#336)	MIN	ON	reset board PCSS r 1
2305 (i)	118	None	WRN	OFF	
2561[1] (j)	Any	None	MIN	ON	
2817[1] (k)	Any	None	MIN	ON	
3073[1]	Any	Expansion Interface Packet Interface Test (#589)	MIN	OFF	test board PCSS rep 3
3074[1] (l)	2	Expansion Interface Packet Interface Test (#589)	MINOR/ WRN[2]	OFF	test board PCSS rep 3
3075[1] (l)	1	Expansion Interface Packet Interface Test (#589)	MINOR/ WRN[2]	OFF	test board PCSS rep 3
3076[1]		Expansion Interface Packet Interface Test (#589)	MINOR/ WRN[2]	OFF	test board PCSS rep 3
3330[1] (m)	Any	None	WRN	ON	
3585 (n)	0	None	WRN	OFF	
3841 (o)	Any	None	MIN	OFF	(See Note q.)
3842 (p)	Any	None	MIN	OFF	(See Note q.)
10000 (r)	0	None			
10001 (s)	0	None			
10002 (t)	0	None			
10003 (u)	0	None			

Continued on next page

Table 10-288. Expansion Interface Circuit Pack Error Log Entries — *Continued*

Error Type	Aux Data	Associated Test	Alarm Level	On/ Off Board	Test to Clear Value
10004 (v)	0	None			
11000 (w)	0	None			
11000 (x)	2	None			
11000 (y)	3	None			
11000 (z)	4	None			
11000 (aa)	5	None			
11000 (ab)	8	None			
11001 (ac)	0	None			

1 Run the Short Test Sequence first. If all tests pass, run the Long Test Sequence. Refer to the appropriate test description and follow the recommended procedures.

2 Minor alarms on this MO may be downgraded to Warning alarms based on the value used in the **set options** command.

Notes:

a. Expansion Interface (EI) circuit pack has been busied out by system technician.

b. EI circuit pack has been administered on the Circuit Pack form, but has not been physically inserted into the system. Insert the circuit pack.

c. A wrong circuit pack is inserted in the slot where this circuit pack is logically administered. To resolve this problem, either remove the wrong circuit pack and insert the logically administered circuit pack OR use the **change circuit-pack** command to re-administer this slot to match the circuit pack inserted.

d. This alarm is raised after an EI circuit pack has been removed from a slot for 11 minutes. The alarm is resolved when the EI circuit pack is inserted into this slot. Another way to resolve or prevent this alarm is to use the **change circuit pack** command to remove the EI circuit pack administrative entry for this slot after the EI circuit pack has been removed from the slot. Or, if the circuit pack is in the system and the red LED is on, then follow the instructions for “Red (alarm)” in the “Control and Port Circuit Pack Status LEDs” section in Chapter 7, “LED Interpretation”.

e. Error Type 257 with Aux Data 85 through 88 indicates that this EI circuit pack is detecting incorrect data on the incoming fiber bit stream. The data is originating at the opposite EI circuit pack. These errors could result from a bad timing reference on the network which contains the EI circuit pack on the opposite end of the fiber. For example, if the error is logged against the 1B01 (PPN) EI circuit pack, then the bad timing reference is on the EPN. Resolve any EXP-INTF errors 2305, 769, or 770. Resolve any TONE-BD, TDM-CLK, or SYNC errors. Finally, if the errors continue to occur, perform the following procedure:

   1. If the EI circuit pack reporting the error is part of the Active link and a Standby link exists, switch to the Standby link.
   2. Reset the EI circuit pack at the opposite end of fiber.
   3. Issue the **test board PCSS repeat 10** command, where PCSS is the address of the EXP-INTF circuit pack reporting the error. If Tests #241 or #316 fail even once, follow the procedures associated with the failures.
   4. Wait 15 minutes. Then check the Error Log to see if new errors of type 257 have been detected.
   5. If errors are present, reset the EI circuit pack reporting the errors.
   6. Wait five minutes. Then check the Error Log to see if new errors of type 257 have been detected.
   7. If errors are present, replace the EI circuit pack or transceiver at the opposite end of the fiber.
   8. Wait 15 minutes. Then check the Error Log to see if new errors of type 257 have been detected.
   9. If errors are present or if this error occurs intermittently (over one week's time), replace the EI circuit packs or transceivers on this link.

f. Error Type 513 with Aux Data 5 through 7 indicates an ON BOARD hardware failure of the circuit packs RAM or ROM. Replace the EI circuit pack or transceiver.

g. Error Type 1538 indicates a hyperactive EI circuit pack that is generating an abnormal amount of control messages to the Processor circuit pack. When this error was generated, the EI was automatically reset by the system. If this system does not have duplicate EI Links, service to the EPN is disrupted. If this system does have duplicate EI Links, the system should have switched to the Standby EI Link. Reset the EI. If error 1538 is detected again, replace the EI circuit pack or transceiver.

h. Error Type 2049 indicates that the last time the EI circuit pack was reset, its initialization tests failed. The number in the Aux Data field is the error code with which Reset Test (#336) failed. Follow the procedure specified in the Reset Test (#336) FAIL section for this error code.

i. Error Type 2305 with aux data 118 indicates that the EI circuit pack has detected slips on the incoming fiber data stream. Thus, the EPN and PPN are not synchronized. Examine the Error Log for any SYNC, TDM-CLK, TONE-BD, and DS1-BD errors. If these errors exist, refer to the appropriate MO for repair procedures. If the errors do not exist, refer to “SYNC” for general information on diagnosing synchronization problems. If there are no active EI circuit pack errors with Error Types 769 and 770, Error Type 2305 resolves when fewer than nine slips are detected in a 5- to 10-minute period (that is, Error Type 2305 resolves within 10 minutes of the last slip.) If the Error Log has an active EI error with type 769 or 770, then Error Type 2305 is resolved when Error Types 769 and 770 are resolved.

NOTE:
These errors may be ignored if they occur during clock interchanges.

j. Error Type 2561 indicates an on-board failure of EI circuitry related to handling packet data from the fiber interface and from the Packet bus interface. If this error has generated a minor alarm, replace the EI circuit pack or transceiver.

k. Error Type 2817 indicates an on-board failure of EI circuitry related to transmission of data to the fiber interface. If this error has generated a minor alarm, replace the EI circuit pack or transceiver.

l. Error Type 3074 and 3075 indicates failures of EI circuit pack packet path tests. These packet path tests do exercise circuitry on both EI circuit packs of the expansion link. If Error Type 3075 is present without Error Type 3074, the fault probably lies with the EI circuit pack that reported the error. Replace the EI circuit pack or transceiver. If Error Type 3074 exists with or without 3075, the fault is probably on the neighbor of the EI circuit pack that reported this error. Replace the neighbor EI circuit pack or transceiver.

NOTE:
Certain Packet Bus failures can cause this error. In that case the EI is not defective. If PKT-BUS errors are also present, refer to Chapter 9, “Packet Bus Fault Isolation and Correction” and the PKT-BUS section for fault isolation procedures. If PKT-BUS errors are not present and replacing the EI does not solve the problem this error can still be the result of a Packet Bus failure.

m. Error Type 3330 indicates a failure of a diagnostic component on the Expansion Interface circuit pack. The failed component does not impair service, but it may leave the EI circuit pack in a state where the EI circuit pack cannot detect errors.

n. Error Type 3585 indicates that the EI circuit pack experienced a series of very short out-of-frame conditions within several minutes. This may indicate transmission difficulties over the fiber link. If this is a duplex system, and if no other alarms exist, the system should have switched away from the fiber link using this EI circuit pack. If this condition ceases, the warning alarm should be resolved within 15 minutes. In the meantime, make sure all lightwave transceivers are firmly secured to the back of the cabinet. Thereafter, if the alarm is not resolved during the next four 15-minute segments, replace the following (the first after the first 15-minute segment, the second after the second 15-minute segment, and so forth):

   1. Lightwave transceiver attached to the EI reporting the alarm
   2. Lightwave transceiver on the opposite end of the fiber
   3. Expansion Interface board reporting the alarm
   4. Expansion Interface board on the opposite end of the fiber

   Since the counter is active only due to a transient condition, there is no test that can be run to clear the counter. However, the counter automatically decrements by one every five minutes. Once the condition causing the transient Fibers Out-of-Frame (FOOFs) has been fixed, it will take 15 minutes for the counter to be cleared if the alarm was raised.

o. Error Type 3841 indicates that the EI (TN570 only) has reported a loss of lock with the backplane system clock.

p. Error Type 3842 indicates that the test that queries the EI (TN570 only) for the state of the lock to the system clock has failed. This means that a loss of lock condition is present. A link switch is then attempted, and the alarm is raised. When both links report this error, the link switch is not attempted because, in this case, the problem is more likely to occur with the backplane clock than with the Expansion Interface circuit pack.

q. The counter associated with Error Types 3841 and 3842 is cleared when the query for the state of the lock-to-system-clock passes. Once the alarm is raised, this test is run every five minutes. However, the test is not part of any sequence that can be run on demand.

r. Error Type 10000 is a report from the EI circuit pack that its internal data has become corrupted. The EI circuit pack has lost track of control messages destined for the EPN. When this error is detected, the system automatically resets the EI circuit pack and brings the EPN down. Service to the EPN is unavailable for several minutes after detection of this error. No system technician action is required.

s. Error Type 10001 is a report that the EI circuit pack dropped one control message to the EPN. This condition may have been observed as a call that did not complete correctly. No system technician action is required.

t. In response to Error Type 10002, the system denied all calling services for up to 10 seconds.

   If EI Error Type 257 is logged at the same time against an Expansion Interface circuit pack on this link, first try to resolve this error. The error associated with Error Type 257 could be the cause of this error.

   If Error Type 257 is not logged at the same time as this error, then Error Type 10002 indicates that heavy call traffic was encountered involving EPN endpoints.

   No system technician action is required; however, should this error recur frequently, the system should be examined for traffic engineering. The PPN and EPNs may not be equipped with sufficient trunks and Tone Detectors for the number of stations in each cabinet.

u. Error Type 10003 indicates that heavy call traffic involving EPN endpoints has returned to normal levels. This Error Type should always appear after Error Type 10002 or 10004. No system technician action is required.

v. Error type 10004 indicates that an extreme backup of traffic was present on the EI circuit pack. The EPN served by this link was most probably not providing service when this error was logged. If this is a high or critical reliability system, the system should have switched to the Standby Expansion Link in order to restore service. Error type 11000 with an Aux value of 5 should have been logged against EXP-INTF to indicate this condition.

   In a standard system, the system should have reset the EPN in order to restore service. EXP-LINK Error Type 122 with an Aux value of 6 should have been logged to indicate this condition.

w. Error Type 11000 with an Aux value of 0 appears when an EI Link switch takes place. Data calls between the PPN and EPN may have experienced some data loss or, in severe cases, the data calls may have dropped. The link that became active is the link with the circuit pack address given in the Error Log entry. The link switch may have occurred for several reasons:

   1. System Technician demanded the Expansion Interface Link switch. This can be verified by using the **list history** command.
   2. The Expansion Interface Link switch may have been scheduled. Check the Maintenance-Related System Parameters form.
   3. An Expansion Interface circuit pack error may have been detected. Examine the Error Log for other EI circuit pack errors with the same approximate time as this error.

4. An EPN Maintenance circuit pack error may have been detected. Examine the Error Log for MAINT errors with the same approximate time as this error. MAINT Error Type 2561 indicates that the Active Expansion Interface circuit pack on the EPN could not communicate with the EPN Maintenance circuit pack. MAINT Error Type 3329 means the EPN Maintenance circuit pack cannot talk to the EPN Expansion Interface circuit pack in the A carrier. MAINT Error Type 3585 means the EPN Maintenance circuit pack cannot talk to the EPN Expansion Interface circuit pack in the B carrier.
5. Synchronization (SYNC) maintenance may have detected an inability of the Active Expansion Interface Link to provide synchronization between cabinets. Examine Error Log for SYNC Error Type 2305 with the same approximate time as this error.

x. Error Type 11000 with an Aux value of 2 appears when a system technician-demanded Expansion Interface Link Switch is issued. No further action is required.

y. Error Type 11000 with an Aux value of 3 appears when a scheduled EI Link Switch has occurred. No further action is required.

z. Error Type 11000 with an Aux value of 4 appears when an Expansion Interface Link Switch has occurred due to a Special EPN recovery strategy. The software has forced an Expansion Interface switch because the new Expansion Interface Link contains new features which support EPN recovery in case of a bad tone/clock board. This error code appears when there is a periodic/scheduled tone/clock switch.

aa. Error Type 11000 with an Aux value of 5 appears when the system has detected an excessive backup of traffic on the Active Expansion Link. This condition may have been due to communication difficulties on the Expansion link. To restore normal service, the system switched Expansion Links to the link identified in the Error Type 11000 with an Aux Data value of 5. Error Type 10004 should be present against the Expansion Interface circuit pack that reported the traffic congestion.

ab. Error type 11000 with an Aux value of 8 indicates that the EI link was switched as part of the recovery action taken by EPN-SNTY. This error should be accompanied by EPN-SNTY error 8802 0. If EPN-SNTY error 9902 0 is also present, this indicates that the switching of the EI link was the recovery action that restored sanity to the EPN. In this case, the fault was with the link that was switched away from. The relevant EIs and connections should be tested and examined to determine the cause of the problem. Look for EPN-SNTY errors in the error log, and refer to the EPN Sanity Audit (EPN-SNTY) section for more details.

ac. Error Type 11001 occurs when an Expansion Link switch was attempted but for unknown reasons could not be completed.

Expansion Interface LED Usage

The EI circuit pack has the standard red, green, and yellow LEDs. The red and green LEDs have the traditional use, where red means some alarm condition and green indicates maintenance testing in progress. The yellow LED is used to provide useful visual status information. The state of the yellow LED is very important when executing the EI Manual Loop Back Procedure previously described.

Upon power-up, the TN776 red LED comes on and off, followed by the yellow LED coming on solid. The TN570 red and green LEDs comes on and off. The yellow LED remains off.

System Technician-Demanded Tests: Descriptions and Error Codes

Always investigate tests in the order they are presented in the table below. By clearing error codes associated with the *Expansion Interface Reset Test,* for example, you may also clear errors generated from other tests in the testing sequence.

Order of Investigation	Short Test Sequence	Long Test Sequence	D/ ND[1]
Expansion Interface Reset Test (#336)			D
Expansion Interface Fiber Out-of-Frame Query Test (#238)	X	X	ND
Expansion Interface Lightwave Transceiver Interface Loop Around Test (#242)		X	D
Expansion Interface Control Channel Test (#316)	X	X	ND
Expansion Interface Neighbor Query Test (#237)	X	X	ND
Expansion Interface Local Loop Around Test (#240)	X	X	ND
Expansion Interface 2-Way Transmission Test (#241)	X	X	ND
TN570 Expansion Interface Packet Interface Test (#589)	X	X	ND

1 D = Destructive; ND = Nondestructive

Expansion Interface Neighbor Query Test (#237)

The Expansion Interface Neighbor Query Test is a request to an EI circuit pack to determine if it has established communication with the EI circuit pack on the opposite end of the fiber.

Table 10-289. TEST #237 EI Neighbor Query Test

Error Code	Test Result	Description/Recommendation
	ABORT	Internal System Error
2000	ABORT	Response to the test request was not received within the allowable time period.
2100	ABORT	System resources required to run this test are not available. Someone may be doing something on this Port Network Interface. 1. Retry the command at 1-minute intervals a maximum of 3 times.
2027	FAIL	The EI circuit pack has contact with the opposite EI circuit pack, but it is the incorrect EI circuit pack. 1. Check Expansion Interface circuit packs and lightwave transceivers to verify that they are placed in the correct slots described above. 2. If working with duplicate Expansion Interface Links, check for crossed fiber pairs such as 1A01 connected to 2B02 or 1B01 connected to 2A01.

Continued on next page

Table 10-289. TEST #237 EI Neighbor Query Test — *Continued*

Error Code	Test Result	Description/Recommendation
	FAIL	The Expansion Interface circuit pack under test cannot make contact with opposite end Expansion Interface circuit pack. 1. If Test #238 passes (yellow LED not blinking at a rate of 5 times per second), the Expansion Interface circuit pack is detecting the framing signal and an Expansion Interface circuit pack is at least physically present on the opposite side. a. Reset the OPPOSITE Expansion Interface circuit pack using the **reset board PCSS** command where PCSS is the address of the OPPOSITE Expansion Interface circuit pack. b. If the reset command returns the message "EPN is unavailable," use the **change circuit-pack** command to add a TN776/TN570 Expansion Interface circuit pack to the correct EPN slot. Then, repeat the **reset board** command. c. If the reset command returns the message "Board not Assigned," the EPN Maintenance circuit pack may be holding the Expansion Interface circuit pack reset. First, try to reset the EPN Maintenance circuit pack using the **test maintenance long** command. Then, repeat the **reset board** command on the EPN Expansion Interface circuit pack. d. If the reset does not pass, refer to the Expansion Interface Reset Test (#336). e. If the reset passes, execute the **test board PCSS** command on the opposite Expansion Interface circuit pack. Resolve all problems on the opposite Expansion Interface circuit pack before proceeding. f. If this test still does not pass, try replacing the Expansion Interface circuit pack on which this test is failing. 2. If Test #238 fails (yellow LED is blinking at a rate of 5 times per second), refer to the procedures for Test #238.

Continued on next page

Table 10-289. TEST #237 EI Neighbor Query Test — *Continued*

Error Code	Test Result	Description/Recommendation
	PASS	The Expansion Interface circuit pack has successfully established a link with the opposite Expansion Interface circuit pack. 1. If the **status system** command still indicates that this link is down, it is possible that one or both of the Expansion Interface circuit packs have been busied out. 2. If the link still does not come up, reset one or both Expansion Interface circuit packs on the link.
0	NO BOARD	No board was detected by the test. 1. Check the error log for wrong board (error 125) or no board (error 131). Resolve either of these issues, if applicable. 2. Check that the board is properly translated and inserted. If so, check for hyperactivity (error 1538). If hyperactive, use the **reset board PCSS** command. 3. Run the test again. If it fails, the ID chip on board may be bad. Replace the board and retest.

Expansion Interface Fiber Out-of-Frame (FOOF) Query Test (#238)

This test is a request to an Expansion Interface circuit pack to determine if it is currently detecting the framing sequence on the incoming fiber data stream. If it cannot detect this framing signal, the Expansion Interface circuit pack is not able to establish a link with the opposite Expansion Interface circuit pack.

Table 10-290. TEST #238 EI Fiber Out-of-Frame Query Test

Error Code	Test Result	Description/Recommendation
	ABORT	Internal system error
2000	ABORT	Response to the test request was not received within the allowable time period.
2100	ABORT	System resources required to run this test are not available. 1. Retry the command at 1-minute intervals a maximum of 5 times.

Continued on next page

Table 10-290. TEST #238 EI Fiber Out-of-Frame Query Test — *Continued*

Error Code	Test Result	Description/Recommendation
2026	ABORT	Expansion Interface circuit pack responded with an unknown reply. 1. Retry the command at 1-minute intervals a maximum of 5 times.
	FAIL	Expansion Interface circuit pack could not detect framing sequence. 1. Check if the Expansion Interface circuit pack on the opposite end of the fiber is present and if its cabinet has power. 2. Verify that the lightwave transceiver is connected to the correct slot on the back of the cabinet and that the fiber is connected to the lightwave transceiver. Verify this connection on both ends of the fiber. Check that an Expansion Interface circuit pack detects its lightwave transceiver by executing the **reset board PCSS** command, where PCSS refers to the Expansion Interface circuit pack. If the reset passes, the Expansion Interface circuit pack detects a lightwave transceiver. Refer to the description of the Expansion Interface Reset Test (#336) if the reset fails. 3. Verify that fiber transmit and receive ends have not been crossed when connected to the lightwave transceiver. 4. The problem may be due to a synchronization timing loop. Use the **status sync** command to determine which circuit pack is the synchronization reference. If the reference is a DS1 Interface circuit pack, use the **set sync** command to make a Tone-Clock circuit pack the reference. If this action causes the Expansion Interface to go into frame, synchronization must be examined for a possible timing loop. Refer to SYNC (Synchronization) Maintenance documentation for repair procedures. If the DS1 Interface circuit pack is not a reference, and the Expansion Interface circuit pack that is failing Test #238 is in the PPN, run tests on Tone-Clock circuit pack in the PPN to determine if clocks are present. If the Expansion Interface circuit pack that is failing Test #238 is in the EPN, and the red LEDs are ON on a large number of circuit packs, then reseat any Tone-Clock circuit packs in the EPN. *More information follows.*

Continued on next page

Table 10-290. TEST #238 EI Fiber Out-of-Frame Query Test — *Continued*

Error Code	Test Result	Description/Recommendation
	FAIL *(cont'd.)*	5. Execute the **test tone-clock PC** command where P is the port network which contains the Expansion Interface circuit pack's neighbor Expansion Interface on the OPPOSITE end of the fiber and C refers to the carrier which contains the Active Tone-Clock on port network P. Also, look for SYNC errors in the Error Log. If there are any tests failing or errors found, resolve these problems and then rerun Test #238. If the test still fails and the system has a Standby Tone-Clock, switch the Active Tone-Clock on this network (**set tone-clock PC** command, where P is the port network containing the Expansion Interface circuit pack on the OPPOSITE end of the fiber and C is the carrier containing the Standby Tone-Clock). Also, if the EPN is down, replace the EPN Tone-Clock circuit pack in carrier A of the EPN. 6. Check for errors using the **display errors** command with the Category field set to "tone" and the Active alarms field set to "n." Some of the alarms on EPN objects might have been resolved if the EPN went down. Refer to the documentation for descriptions of any of the error types occurring at about same time as the EXP-LINK error types. Resolve any active alarms. Also, if Error Type 18 was logged against the SYNC MO when the EPN went down, the problem was probably that the Synchronization on-line reference became invalid. Since, reference switching was disabled, the Tone-Clock did not switch away from the invalid reference. Therefore, the Tone-Clock put out an "out-of-spec" system clock. Execute the **enable synchronization-switch** command. If the EPN is down, reseat the Tone-Clock circuit packs on the EPN. This action should restore the EPN to service. 7. Follow the procedure described in "Relationship Between Expansion Interface and Tone-Clock Circuit Packs" near the beginning of this section if the symptoms match those described there.
	PASS	The Expansion Interface circuit pack has detected the valid framing signal on the fiber. 1. Refer to errors from other Expansion Interface circuit pack tests if the link is still not functioning.

Continued on next page

Table 10-290. TEST #238 EI Fiber Out-of-Frame Query Test — *Continued*

Error Code	Test Result	Description/Recommendation
0	NO BOARD	No board was detected by the test. 1. Check the error log for wrong board (error 125) or no board (error 131). Resolve either of these issues, if applicable. 2. Check that the board is properly translated and inserted. If so, check for hyperactivity (error 1538). If hyperactive, use the **reset board PCSS** command. 3. Run the test again. If it fails, the ID chip on board may be bad. Replace the board and retest.

Expansion Interface Local Loop Around Test (#240)

This test is similar to the Lightwave Transceiver Loop Around Test described in Test #242. A test tone from TDM Bus A is received by the Expansion Interface circuit pack under test, but is not transmitted out to the lightwave transceiver before being looped back onto TDM Bus A again. The test is then repeated using TDM Bus B. Thus, this loopback test is performed on each TDM Bus on the network containing the Expansion Interface circuit pack to verify that the Expansion Interface circuit pack is able to loopback data on each TDM Bus. Since this loopback is internal to the circuit pack, this test does not interfere with the normal fiber data stream.

Table 10-291. TEST #240 EI Local Loop Around Test

Error Code	Test Result	Description/Recommendation
	ABORT	Internal system error 1. Retry the command at 1-minute intervals a maximum of 5 times.

Continued on next page

Table 10-291. TEST #240 EI Local Loop Around Test — *Continued*

Error Code	Test Result	Description/Recommendation
1	ABORT	Could not allocate time slot on TDM Bus A. Loop back passed on TDM Bus B.
2	ABORT	Could not allocate time slot on TDM Bus B. Loop back passed on TDM Bus A. 1. If there is no reason to doubt that the Expansion Interface circuit pack can transfer data to or from a TDM Bus, then since the test passed on one bus, assume that the test passes on the other bus as well. 2. If EXP-INTF circuit pack Error Types 1, 2, 1537, or 1793 are present in the Error Log and/or if Expansion Interface circuit pack Tests #240, #241, or #242 have failed previously, there is reason to doubt that the Expansion Interface circuit pack can transfer data to or from a TDM Bus. To determine if the test can pass on both TDM Buses, perform the following procedure: For Error Code 1, issue the **set tdm PC** command, where P is the network containing the Expansion Interface circuit pack being tested and C is the TDM Bus A. Execute the **test board PCSS** command again. If this test passes or aborts with Error Code 2, this test is considered to have passed. For Error Code 2, issue the **set tdm PC** command, where P is the network containing the Expansion Interface circuit pack being tested and C is the TDM Bus B. Execute the **test board PCSS** again. If this test passes or aborts with error code 1, this test is considered to have passed. 3. If this test continues aborting with the same error after setting the TDM Bus as indicated in Step 2, rerun the test at 1-minute intervals a maximum of 5 times. Apply the passing criteria for Step 2 to each result. 4. If the test still does not pass on the other TDM Bus, follow the procedure for abort error code 3.
3	ABORT	The system could not allocate time slots for the test on either TDM Bus. The system may be under heavy traffic conditions or it may have time slots out-of-service due to TDM-BUS errors. Enter **display errors** and follow associated repair procedures for TDM-BUS errors. 1. If system has no TDM-BUS errors and is not handling heavy traffic, repeat test at 1-minute intervals a maximum of 3 times.

Continued on next page

Table 10-291. TEST #240 EI Local Loop Around Test — *Continued*

Error Code	Test Result	Description/Recommendation
1002	ABORT	The system could not allocate time slots for the test on either TDM Bus. The system may be under heavy traffic conditions or it may have time slots out-of-service due to TDM-BUS errors. Refer to TDM-BUS (TDM Bus) Maintenance documentation to diagnose any active TDM-BUS errors. 1. If system has no TDM-BUS errors and is not handling heavy traffic, repeat the test at 1-minute intervals a maximum of 5 times.
1003	ABORT	The system could not allocate a tone receiver for the test. The system may be oversized for the number of Tone Detectors present or some Tone Detectors may be out-of-service. 1. Look for TTR-LEV errors in the Error Log. If these errors are present, refer to TTR-LEV (TTR Level) Maintenance documentation. Even if there are no TTR-LEV errors, there still may not be a Tone Detector available on the network that contains the circuit pack being tested. Verify that there is at least one Tone Detector on this network. If not, this test always aborts for this Expansion Interface circuit pack. This does not harm the system in any way. 2. Look for TONE-PT errors in the Error Log. If present, refer to TONE-PT (Tone Generator) Maintenance documentation. 3. If neither condition exists, retry the test at 1-minute intervals a maximum of 5 times.
1031	ABORT	A query of the Expansion Interface circuit pack aborted. The purpose of this query was to see if the Expansion Interface circuit pack could detect the framing signal. 1. If Test #238 aborted, follow the procedure associated with this abort code. 2. If Test #238 did not abort, rerun Test #240 at 1-minute intervals a maximum of 5 times. 3. If Test #240 continues to abort without Test #238 aborting, escalate the problem.
1032	ABORT	The Expansion Interface circuit pack cannot detect the framing signal and cannot run the test. 1. Refer to the errors for Test #238 to determine why the Expansion Interface circuit pack is out-of-frame.

Continued on next page

Table 10-291. TEST #240 EI Local Loop Around Test — *Continued*

Error Code	Test Result	Description/Recommendation
2000	ABORT	Response to the test request was not received within the allowable time period.
2100	ABORT	System resources required to run this test are not available. 1. Retry the command at 1-minute intervals a maximum of 5 times.
1	FAIL	Loop back on TDM Bus A failed. Loop back on TDM Bus B passed.
2	FAIL	Loop back on TDM Bus B failed. Loop back on TDM Bus A passed.
3	FAIL	Loop back on both TDM Busses failed.
12	FAIL	Loop back on TDM Bus B failed. Loop back TDM Bus A aborted because the system could not allocate time slots.
21	FAIL	Loop back on TDM Bus A failed. Loop back on TDM Bus B aborted because the system could not allocate time slots.
	FAIL	The test tone was not detected correctly after being looped through the Expansion Interface circuit pack. 1. If error type 2305 has been logged against the Expansion Interface circuit pack in the last 5 minutes, this test could have failed due to the associated slips. If this is the case, first resolve the 2305 error, and then repeat test. 2. Run the tests for the Active Tone-Clock on the Port Network that contains the indicted Expansion Interface circuit pack to verify that dial-tone is being supplied. 3. If the tone-clock is healthy, repeat the short test on the Expansion Interface circuit pack. 4. If this test continues to fail, replace Expansion Interface circuit pack.

Continued on next page

Table 10-291. TEST #240 EI Local Loop Around Test — *Continued*

Error Code	Test Result	Description/Recommendation
	PASS	Test tone was correctly detected after the internal Expansion Interface loop back on both TDM Busses. 1. Refer to other Expansion Interface circuit pack tests if the Expansion Interface Link is not functioning correctly.
0	NO BOARD	No board was detected by the test. 1. Check the error log for wrong board (error 125) or no board (error 131). Resolve either of these issues, if applicable. 2. Check that the board is properly translated and inserted. If so, check for hyperactivity (error 1538). If hyperactive, use the **reset board PCSS** command. 3. Run the test again. If it fails, the ID chip on board may be bad. Replace the board and retest.

Expansion Interface 2-Way Transmission Test (#241)

This test is a basic connectivity test between the two cabinets. The test first sends a test tone from the cabinet of the Expansion Interface circuit pack under test through the opposite Expansion Interface circuit pack to a Tone Detector in the opposite cabinet. The connections are then reversed and the tone is passed in the opposite direction. This test should be run once from each Expansion Interface circuit pack on the fiber.

Table 10-292. TEST #241 Expansion Interface 2-Way Transmission Test

Error Code	Test Result	Description/Recommendation
	ABORT	Internal system error 1. Retry the command at 1-minute intervals a maximum of 5 times.

Continued on next page

Table 10-292. TEST #241 Expansion Interface 2-Way Transmission Test — *Continued*

Error Code	Test Result	Description/Recommendation
1002	ABORT	The system could not allocate time slots for the test. The system may be under heavy traffic conditions or it may have time slots out-of-service due to TDM-BUS errors. Refer to TDM-BUS (TDM Bus) Maintenance documentation to diagnose any active TDM-BUS errors. 1. If the system has no TDM-BUS errors and is not handling heavy traffic, repeat test at 1-minute intervals a maximum of 5 times.
1003	ABORT	The system could not allocate a tone receiver for the test. The system may be oversized for the number of Tone Detectors present or some Tone Detectors may be out-of-service. 1. Look for TTR-LEV errors in the Error Log. If present, refer to TTR-LEV (TTR Level) Maintenance documentation. Even if there are no TTR-LEV errors, there still may not be a Tone Detector available on the network that contains the circuit pack being tested. Verify that there is at least one Tone Detector on this network. If there is not at least one Tone Detector, this test always aborts for this Expansion Interface circuit pack. This does not harm the system in any way. **NOTE:** G3 systems require that Tone Detector circuit packs (TN768) must be of vintage "B" or newer. If older Tone Detector circuit packs are installed in the system, this test well always abort with this abort code. 2. Look for TONE-PT errors in the Hardware Error Log. If present, refer to TONE-PT (Tone Generator) Maintenance documentation. 3. If neither condition exists, retry the test at 1-minute intervals a maximum of 5 times.
1033	ABORT	The test cannot run because either one or both of the Expansion Interface circuit packs on this link are busied out or an Expansion Interface circuit pack is not present on the opposite end of the fiber. 1. If Expansion Interface is busied out, issue the **release board PCSS** command. 2. Examine results of Tests #237 and #238.

Continued on next page

Table 10-292. TEST #241 Expansion Interface 2-Way Transmission Test — *Continued*

Error Code	Test Result	Description/Recommendation
2000	ABORT	Response to the test request was not received within the allowable time period.
2100	ABORT	System resources required to run this test are not available. 1. Retry the command at 1-minute intervals a maximum of 3 retries.
	FAIL	The test tone was not detected correctly in either direction. 1. Run the test for the Active Tone-Clocks on the Port Networks for which the Expansion Interface circuit pack under test provides a link. This will determine if the dial tone is being supplied. 2. Check for disconnected transmit or receive fiber on both ends of the fiber. Make sure both endpoint circuit packs are inserted and have no on-board alarms.
1 or 2	FAIL	The test tone was detected correctly in only one direction. 1. Run the test for the Active Tone-Clocks on the Port Networks for which the defective Expansion Interface circuit pack provides a link. This determines if the dial tone is being supplied. 2. Check for disconnected transmit or receive fibers on both ends of the fiber. 3. If Test #238 is failing, refer to procedures for Test #238. 4. If Error Type 2305 has been logged against this Expansion Interface circuit pack, or the Expansion Interface circuit pack on the opposite end of its fiber, in the last five minutes, this test may have failed due to the associated slips. If such errors exist, first resolve them, and then repeat this test. 5. Execute the **test board PCSS long** command on both Expansion Interface circuit packs and follow procedures for Test #242 to determine if the problem lies with one of the Expansion Interface circuit packs, the lightwave transceivers, or the fiber itself.
	PASS	The tone was successfully transmitted in both directions. Both Expansion Interface circuit packs and their lightwave transceivers are functioning properly.

Continued on next page

Table 10-292. TEST #241 Expansion Interface 2-Way Transmission Test — *Continued*

Error Code	Test Result	Description/Recommendation
0	NO BOARD	No board was detected by the test. 1. Check the error log for wrong board (error 125) or no board (error 131). Resolve either of these issues, if applicable. 2. Check that the board is properly translated and inserted. If so, check for hyperactivity (error 1538). If hyperactive, use the **reset board PCSS** command. 3. Run the test again. If it fails, the ID chip on board may be bad. Replace the board and retest.

Expansion Interface Lightwave Transceiver Looparound Test (#242)

This test is destructive and requires that the Expansion Interface circuit pack first be busied out. Busying out an Expansion Interface circuit pack denies service to the EPN if the Expansion Interface circuit pack supports a PPN to EPN link and duplicate Expansion Interface Links are not in use. If the Expansion Interface circuit pack is part of an EPN to EPN link, service between the two EPNs are denied if duplicate Expansion Interface links are not in use.

This test is NOT DESTRUCTIVE if the Expansion Interface circuit pack to be busied out is in Standby Mode.

This is a two part connectivity test. The first portion of the test applies to both TN776 and TN570 Expansion Interface circuit packs. In the first part of the test, a test tone is transmitted from the cabinet of the Expansion Interface circuit pack under test, through the Expansion Interface circuit pack under test, out to its lightwave transceiver. The connection then loops back into the lightwave transceiver through the same Expansion Interface circuit pack again and into the originating cabinet. If the test tone is detected by a tone detector, the first part of the test passes.

The second portion of the test applies only to the TN570 Expansion Interface circuit pack. In this part of the test, a data packet is sent from the TN778 Packet Control circuit pack to the Expansion Interface circuit pack under test; the packet is then looped back through the lightwave transceiver and sent back to the Packet Control circuit pack. If the Packet Control circuit pack receives the same packet it transmitted, the second part of the test passes. If the entire test has passed, the Expansion Interface circuit pack, its backplane wiring, and the electrical portion of the lightwave transceiver are healthy.

NOTE:
When the Expansion Interface circuit pack under test is an EPN, the data packet must also pass through the Active Expansion Interface circuit packs of the Active link connecting the EPN to the PPN.

This test requires the Expansion Interface circuit pack to ignore incoming data from its neighbor Expansion Interface circuit pack on the opposite end of the fiber. Thus, this test disturbs any inter-cabinet connections that currently exist and disrupts signaling between the two cabinets.

Table 10-293. TEST #242 Expansion Interface Lightwave Transceiver Loop Around Test

Error Code	Test Result	Description/Recommendation
	ABORT	Internal system error 1. Retry the command at 1-minute intervals a maximum of 5 times.
1002	ABORT	The system could not allocate time slots for the test. The system may be under heavy traffic conditions or it may have time slots out-of-service due to TDM-BUS errors. Refer to TDM-BUS (TDM Bus) Maintenance documentation to diagnose any active TDM-BUS errors. 1. If system has no TDM-BUS errors and is not handling heavy traffic, repeat test at 1-minute intervals a maximum of 5 times.
1003	ABORT	The system could not allocate a tone receiver for the test. The system may be oversized for the number of Tone Detectors present or some Tone Detectors may be out-of-service. 1. Look for TTR-LEV errors in the Hardware Error Log. If present, refer to TTR-LEV (TTR Level) Maintenance documentation. Even if there are no TTR-LEV errors, there still may not be a Tone Detector available on the network that contains the circuit pack being tested. Verify that there is at least one Tone Detector on this network. If there is not at least one Tone Detector, this test always aborts for this Expansion Interface circuit pack. This does not harm the system in any way. 2. Look for TONE-PT errors in the Hardware Error Log. If present, refer to TONE-PT (Tone Generator) Maintenance documentation. 3. If neither condition exists, retry the test at 1-minute intervals a maximum of 5 times.

Continued on next page

Table 10-293. TEST #242 Expansion Interface Lightwave Transceiver Loop Around Test — *Continued*

Error Code	Test Result	Description/Recommendation
1015	ABORT	The system does not allow this test to be run because the Expansion Interface circuit pack has not been busied out. 1. Busyout the Expansion Interface circuit pack. Repeat the **test board PCSS long** command.
1031	ABORT	If the Expansion Interface circuit pack is in an EPN and is active and is in slot A01 or B02, this test CANNOT be executed. If the lightwave transceiver loop around is activated, it is impossible to deactivate it. 1. If a Standby Expansion Interface circuit pack pair exists, make that pair active via the **set expansion-link PCSS** command, where PCSS is the address of a Standby Expansion Interface circuit pack. 2. If the Expansion Interface Link switch is successful, the lightwave transceiver Loop Around Test may now be executed on the original Expansion Interface circuit pack in the EPN.
1139	ABORT	The Packet Bus in an Expansion Port Network (Port Network 2 or 3) has a major alarm against it. This test needs to use the alarmed port network's Packet Bus. 1. Resolve the Packet Bus alarm. 2. Retry the command.
1141	ABORT	The Packet Control circuit pack is out-of-service. 1. Determine if the Packet Control circuit pack is busied out by checking the Hardware Error Log to see if Error Type 18 has been logged against PKT-CTRL. If Error Type 18 is present, release the circuit pack via the **release packet-control** command, and retry the command. 2. If the Packet Control circuit pack is NOT busied out, refer to PKT-CTRL (Packet Control circuit pack) Maintenance documentation for the recommended repair procedure.
1144	ABORT	The Packet Bus in the Processor Port Network has a major alarm active against it. This abort code only appears when the test is run in an EPN. 1. Resolve the alarm in the PPN. 2. Retry the command.

Continued on next page

Table 10-293. TEST #242 Expansion Interface Lightwave Transceiver Loop Around Test — *Continued*

Error Code	Test Result	Description/Recommendation
2000	ABORT	Response to the test request was not received within the allowable time period.
2100	ABORT	System resources required to run this test are not available. 1. Retry the command at 1-minute intervals a maximum of 5 times.
2060	ABORT	The link on the Packet Bus being used to perform the test has failed. 1. Retry the command at 1-minute intervals a maximum of 5 times. 2. If the test continues to abort, check for problems with the Packet Control circuit pack (look for PKT-CTL errors).
2500	ABORT	An internal operation failed; the test could not be completed. 1. Retry the command at 1-minute intervals a maximum of 5 times.
1	FAIL	The test did not detect the test tone through the loop around connection. **NOTE:** If the circuit pack is a TN570, the packet portion of this test was not run since the circuit portion failed. 1. Test the Active Tone-Clock on the Port Network that contains the defective Expansion Interface circuit pack to verify that dial tone is being supplied. 2. If the Tone-Clock is healthy, issue the **test board PCSS long** command on the Expansion Interface circuit pack. 3. If this test continues to fail, replace the Expansion Interface circuit pack or transceiver. Then, reissue the **test board PCSS long** command on the new Expansion Interface circuit pack.

Continued on next page

Table 10-293. TEST #242 Expansion Interface Lightwave Transceiver Loop Around Test — *Continued*

Error Code	Test Result	Description/Recommendation
2	FAIL	The test tone was transmitted and detected correctly, but the correct data packet was not detected by the TN778 Packet Control circuit pack. This error only applies to the TN570 Expansion Interface circuit pack. 1. Test the TN778 Packet Control circuit pack to verify that it is functioning properly. If any tests fail, investigate those tests and repair the Packet Control circuit pack. 2. If the Packet Control circuit pack checks out OK, issue the **test board PCSS long** command on the Expansion Interface circuit pack. 3. If Test #242 continues to fail, replace the Expansion Interface circuit pack. Then, issue the **test board PCSS long** command on the new Expansion Interface circuit pack. 4. If Test #242 continues to fail, replace the lightwave transceiver, reset the circuit pack and issue the **test board PCSS long** command on the Expansion Interface circuit pack.

Continued on next page

Table 10-293. TEST #242 Expansion Interface Lightwave Transceiver Loop Around Test — *Continued*

Error Code	Test Result	Description/Recommendation
	PASS	**NOTE:** If the Expansion Interface is a TN570 and the system does not have the Packet Bus enabled field set to yes on the Maintenance-related system parameters form, then this test does not execute the packet bus portion of the loop around. When this test (#242) and the Expansion Interface Local Loop Around Test #240 pass, this indicates that the Expansion Interface circuit pack is functioning properly, but it does not verify that the optical portion of the lightwave transceiver is functioning properly. Remove the Expansion Interface circuit pack from the busyout state using the **release board PCSS** command. 1. If duplicate Expansion Interface Links are available, issue the **test board PCSS** command on the Standby Expansion Interface circuit packs on both ends of fiber. If this test passes from both sides, but other tests fail, such as Test #241, this condition indicates either a faulty lightwave transceiver or a faulty fiber cable. To determine if either a lightwave transceiver or the fiber itself has failed, execute the Expansion Interface Manual Loop Back Procedure described in the section preceding the "Hardware Error Log Entries and Test to Clear Values" table for this MO. **NOTE:** This test can only be run from both Expansion Interface circuit packs if they are the Standby pair, and if the Active pair is working properly. 2. If this Expansion Interface circuit pack is failing other tests, the Expansion Interface Manual Loop Back Test should be executed. If problems still exist after the Expansion Interface Manual Loop Back Procedure indicates that both Expansion Interface circuit packs and both lightwave transceivers are healthy, manually check out the building fiber. Verify that each optical fiber is connected to a transmitter at one end and a receiver at the other.

Continued on next page

Table 10-293. TEST #242 Expansion Interface Lightwave Transceiver Loop Around Test — *Continued*

Error Code	Test Result	Description/Recommendation
0	NO BOARD	No board was detected by the test. 1. Check the error log for wrong board (error 125) or no board (error 131). Resolve either of these issues, if applicable. 2. Check that the board is properly translated and inserted. If so, check for hyperactivity (error 1538). If hyperactive, use the **reset board PCSS** command. 3. Run the test again. If it fails, the ID chip on board may be bad. Replace the board and retest.

Expansion Interface Control Channel Test (#316)

If an Expansion Interface circuit pack is a Standby Expansion Interface circuit pack (yellow LED off) or if the Expansion Interface is active in the PPN (yellow LED on), this test queries the Expansion Interface circuit pack for its circuit pack type and vintage information. If the Expansion Interface circuit pack is an Active Expansion Interface circuit pack in the EPN (yellow LED on long, off short), the Expansion Interface Control Channel Test checks to see if the Expansion Interface circuit pack can communicate with other circuit packs in the EPN using the EPNTDM Bus.

Table 10-294. TEST #316 Expansion Interface Control Channel Test

Error Code	Test Result	Description/Recommendation
	ABORT	Internal system error
2000	ABORT	Response to the test was not received within the allowable time period.
2100	ABORT	System resources required to run this test are not available. 1. Retry the command at 1-minute intervals a maximum of 5 times.

Continued on next page

Table 10-294. TEST #316 Expansion Interface Control Channel Test — *Continued*

Error Code	Test Result	Description/Recommendation
Any	FAIL	The Expansion Interface circuit pack responded incorrectly or, if it is the EPN Active Expansion Interface circuit pack, it could not talk to EPN circuit packs. 1. If the Active Expansion Interface circuit pack in the EPN is failing and a Standby link exists, switch to the Standby link using the **set expansion-link PCSS** command. 2. Repeat the Short Test Sequence. 3. If test continues to fail, reset the Expansion Interface circuit pack via the **reset board PCSS** command. 4. If the Expansion Interface circuit pack in the EPN is failing, check for EPN TDM-CLK, TONE-BD, or SYNC failures in the Hardware Error Log. Clear any EPN clock-related failures and repeat the Short Test Sequence. 5. If test continues to fail, replace the circuit pack or transceiver.
	PASS	The Expansion Interface circuit pack did respond correctly to the test. Communication from software to the Expansion Interface circuit pack is functioning. 1. Refer to other Expansion Interface circuit pack tests if Expansion Interface Link is not functioning correctly.
0	NO BOARD	No board was detected by the test. 1. Check the error log for wrong board (error 125) or no board (error 131). Resolve either of these issues, if applicable. 2. Check that the board is properly translated and inserted. If so, check for hyperactivity (error 1538). If hyperactive, use the **reset board PCSS** command. 3. Run the test again. If it fails, the ID chip on board may be bad. Replace the board and retest.

Expansion Interface Reset Test (#336)

This test is potentially very destructive and requires the Expansion Interface circuit pack to be busied out prior to execution of this test.

The Expansion Interface Reset Test, which is not a part of either the Short or the Long Test Sequences, is executed via the **reset board PCSS** command where PCSS is the address of the Expansion Interface circuit pack to be reset.

If the system only has one working Expansion Interface Link between a pair of port networks and one of the Expansion Interface circuit packs must be reset, the action of busying out the desired Expansion Interface circuit pack WILL DISRUPT SERVICE TO THE EPN until the Expansion Interface circuit pack is released from the busyout state. If the Expansion Interface circuit pack is part of a PPN to EPN link, the EPN WILL BE WITHOUT SERVICE. If the Expansion Interface circuit pack is part of an EPN to EPN link CALLS BETWEEN THE TWO EPNs WILL BE DENIED.

If the system has working duplicate Expansion Interface Links, and the Expansion Interface circuit pack to be reset is part of the Active Expansion Interface Link, the system does not allow the busyout and instructs system technician to switch Expansion Interface Links via the **set expansion-link PCSS** command where PCSS is the address of either Standby Expansion Interface circuit pack on the Standby link. After executing the Expansion Interface Link switch, it is possible to busyout and then reset the original Expansion Interface circuit pack.

However, if the EPN Maintenance (MAINT) circuit pack determines that the Expansion Interface (EXP-INTF) circuit pack is cycling between sane and insane several times within several minutes, MAINT may inhibit operation of the EXP-INTF by holding the Expansion Interface circuit pack in a reset state. This condition may result in an unsuccessful reset of the Expansion Interface circuit pack.

If the reset command returns with “EPN is unavailable,” execute the following steps:

1. Use the **change circuit-pack P** command where P is the port network number of the EPN.
2. For the Expansion Interface circuit pack you wish to reset, add an entry to the Circuit Pack form for the TN776 or TN570 Expansion Interface circuit pack. Be sure to enter the appropriate carrier and slot (that is, A01 or B02).
3. Enter the form.
4. Repeat the **reset board** command.

Table 10-295. TEST #336 Expansion Interface Reset Test

Error Code	Test Result	Description/Recommendation
	ABORT	Internal system error 1. Retry the command at 1-minute intervals a maximum of 5 times.
4	ABORT	Could not reset EPN Expansion Interface circuit pack over optical fiber since PPN Expansion Interface circuit pack on opposite end of fiber is not inserted. 1. Insert opposite Expansion Interface circuit pack and perform reset again.
1015	ABORT	The system does not allow this test to be run because the Expansion Interface circuit pack has not been busied out. 1. Busyout the Expansion Interface circuit pack. Repeat the **reset board PCSS** command.
2000	ABORT	Response to the test request was not received within the allowable time period.
2100	ABORT	System resources required to run this test are not available. 1. Retry the command at 1-minute intervals a maximum of 5 times.
9999	ABORT	Expansion Interface circuit pack reset successfully. Could not perform initialization test results query because link to EPN is not up. 1. Execute **release board PCSS**. Wait one minute. Issue the **display error** command. If you see Error Type 2049 logged against this Expansion Interface circuit pack, then the Expansion Interface Reset Test has failed with an error code equal to the aux data of this entry. Otherwise, the initialization tests have passed.
12000	ABORT	Expansion Interface circuit pack reset successfully. Response to the initialization test results query was not received within the allowable time period.
12100	ABORT	Expansion Interface circuit pack reset successfully. System resources required to run initialization test are not available. 1. Retry the command at 1-minute intervals a maximum of 5 times.

Continued on next page

Table 10-295. TEST #336 Expansion Interface Reset Test — *Continued*

Error Code	Test Result	Description/Recommendation
12026	ABORT	Expansion Interface circuit pack reset successfully. It responded with an unknown reply to the query for the results of its initialization tests. 1. Retry the command at 1-minute intervals a maximum of 5 times. 2. If the test continues to abort, replace the circuit pack or transceiver.
1	FAIL	The Expansion Interface did not successfully reset. 1. If the Expansion Interface circuit pack is in the EPN, the EPN Maintenance Board may be holding the Expansion Interface circuit pack reset. Attempt to rectify this condition by executing the **test maint P long** command on the maintenance board in the same EPN. 2. If Step #1 was not successful in releasing the Expansion Interface circuit pack, temporarily remove the EPN maintenance circuit pack. 3. Repeat the **reset board PCSS** command. 4. If reset continues to fail, replace circuit pack. 5. Insert EPN maintenance circuit pack if it was removed.
2	FAIL	The Expansion Interface circuit pack was successfully reset, but it did not begin running after the reset. 1. If the Expansion Interface circuit pack is in the EPN, temporarily remove the EPN maintenance circuit pack. 2. Repeat the **reset board PCSS** command. 3. Re-insert the EPN maintenance circuit pack if it was removed.

Continued on next page

Table 10-295. TEST #336 Expansion Interface Reset Test — *Continued*

Error Code	Test Result	Description/Recommendation
3	FAIL	The reset over the optical fiber failed. 1. Execute the **test board PCSS** command on the PPN neighbor Expansion Interface circuit pack located on the opposite end of the fiber from this Expansion Interface circuit pack. If Test #238 does not pass, follow the maintenance procedure associated with this test result. Then perform the reset again. 2. If the Expansion Interface circuit pack is in the EPN, temporarily remove the EPN Maintenance circuit pack. 3. Repeat the **reset board PCSS** command. 4. Reinsert EPN Maintenance circuit pack if it was removed. 5. Follow the procedure described in the "Relationship Between Expansion Interface and Tone-Clock Circuit Packs" section if the symptoms match those described there. 6. Check the Hardware Error Log for the EPN Tone-Clock errors that were resolved about when the EPN went down. These EPN Tone-Clock errors may have been resolved BECAUSE the EPN went down. When there is no Tone-Clock generating the system clock on an EPN, then an Expansion Interface circuit pack can only be reset once. All subsequent reset attempts fail. It is also possible that the system itself may have already tried to reset the Expansion Interface circuit pack. Refer to the TONE-BD (Tone-Clock) Maintenance documentation for recommended maintenance strategy for Tone-Clock problems. 7. If the reset still fails, execute the Manual Loop Back Procedure on the opposite PPN Expansion Interface circuit pack. This procedure is described in the section preceding the “Hardware Error Log Entries and Test to Clear Values” table for this MO. If the Expansion Interface circuit pack and the lightwave transceiver are healthy, the problem must lie with the Expansion Interface circuit pack and its lightwave transceiver on the EPN end of the fiber or with the fiber itself. Test the EPN Expansion Interface circuit pack with the manual loop back procedure and investigate the test results.

Continued on next page

Table 10-295. TEST #336 Expansion Interface Reset Test — *Continued*

Error Code	Test Result	Description/Recommendation
5001	FAIL	**Initialization failure:** Expansion Interface circuit pack reset successfully and restarted execution. But the Expansion Interface circuit pack could not synchronize itself during the self-test phase of the hardware initialization. 1. Issue the **reset board PCSS** command. If the circuit pack is on the Active link, this procedure can be very destructive. If a **test board PCSS** shows all the tests passing, and there is no Standby link to which you can switch, perform this reset at a time when service is least disrupted by losing use of the EPN. 2. If the reset fails with the same error code, execute the **test tone-clock PC** command where P is the network that contains this Expansion Interface circuit pack and C is the carrier that contains the Active Tone-Clock on network P. Also look for SYNC and TONE-BD errors. Resolve any SYNC and TONE-BD errors by following the Maintenance documentation for these MOs. Then reissue the **reset board PCSS** command. 3. If the Expansion Interface circuit pack still fails to reset with the same error code, replace the Expansion Interface circuit pack.

Continued on next page

Table 10-295. TEST #336 Expansion Interface Reset Test — *Continued*

Error Code	Test Result	Description/Recommendation
5002	FAIL	**Initialization failure:** Expansion Interface circuit pack reset successfully and restarted execution. But the Expansion Interface circuit pack has determined that a lightwave transceiver was not attached to the backplane connector when the Expansion Interface circuit pack was last reset. If this system does not have duplicate Expansion Interface Links, all users in the EPN will be without service until this problem is resolved. If this system does have duplicate links, the backup Expansion Interface Link will be unavailable until this problem is resolved. 1. Attach lightwave transceiver to 25-pair backplane connector **in slot belonging to Expansion Interface circuit pack**. 2. Reset the circuit pack again. 3. If the reset fails with an error code other than 5002, refer to the appropriate Maintenance documentation. 4. If the reset fails again with Error Code 5002, replace the lightwave transceiver, reset the circuit pack, and execute the **reset board PCSS** command again. 5. If the reset fails again with Error Code 5002, the new lightwave transceiver may be defective, or the Expansion Interface circuit pack may need to be replaced.

Continued on next page

Table 10-295. TEST #336 Expansion Interface Reset Test — *Continued*

Error Code	Test Result	Description/Recommendation
5016 5017 5018 5019 5032 5033 5048 5064 5080 5096 5112	FAIL	**Initialization failure:** Expansion Interface circuit pack reset successfully and restarted execution. But the Expansion Interface circuit pack detected communication errors during the self-test phase of the hardware initialization. The nature of the failure may prevent the Expansion Interface circuit pack from communicating with its neighbor Expansion Interface circuit pack on the opposite end of the fiber. The fault itself may be either on the Expansion Interface circuit pack or on the lightwave transceiver. 1. If all other tests on this Expansion Interface circuit pack are passing and no other errors have been logged against this circuit pack, replacement of the lightwave transceiver or the circuit pack are recommended, but not critical. 2. If all other tests on this Expansion Interface circuit pack are not passing or other errors have been logged against this circuit pack, the lightwave transceiver and/or the Expansion Interface circuit pack should be replaced.
	PASS	The Expansion Interface was successfully reset, and it did restart execution. Also, it passed all its initialization tests and detected a lightwave transceiver. Remove the Expansion Interface circuit pack from the busyout state by using the **release board PCSS** command. 1. Execute **test board PCSS short** command. Refer to errors for each test.
0	NO BOARD	No board was detected by the test. 1. Check the error log for wrong board (error 125) or no board (error 131). Resolve either of these issues, if applicable. 2. Check that the board is properly translated and inserted. If so, check for hyperactivity (error 1538). If hyperactive, use the **reset board PCSS** command. 3. Run the test again. If it fails, the ID chip on board may be bad. Replace the board and retest.

Expansion Interface Packet Interface Test (#589)

This test attempts to send a data packet from the TN778 Packet Control circuit pack through any intervening Expansion Interface circuit packs and through the Expansion Interface circuit pack to be tested. The path the data packet takes is dependent on the location of the Expansion Interface circuit pack to be tested and whether the Expansion Interface circuit pack is par of the Active link or Standby link.

If the Expansion Interface circuit pack to be tested is part of an Active link from PPN to either EPN, the path shown in Figure 10-31 is used.

If the Expansion Interface circuit pack to be tested is on either EPN and is part of a Standby link from PPN to either EPN, the path shown in Figure 10-32 is used. The path in this figure is also used if the Expansion Interface circuit pack to be tested is on the PPN.

If the Expansion Interface circuit pack to be tested is part of a link from EPN to EPN, the path shown in Figure 10-33 is used.

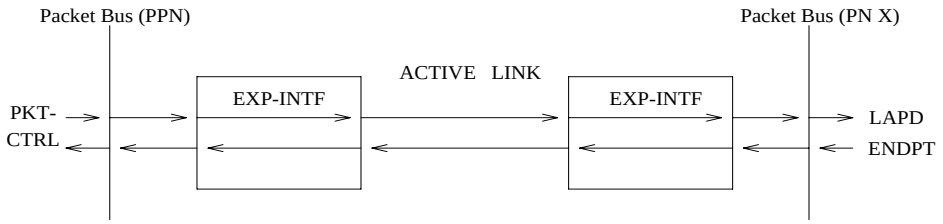

Figure 10-30. (Active EXP-INTFs on EPNs Only)

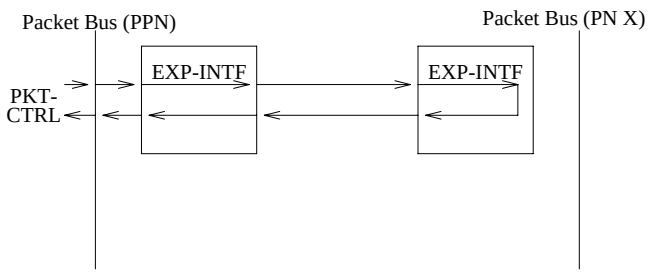

Figure 10-31. (Standby EXP-INTFs on EPNs or PPN EXP-INTFs Only)

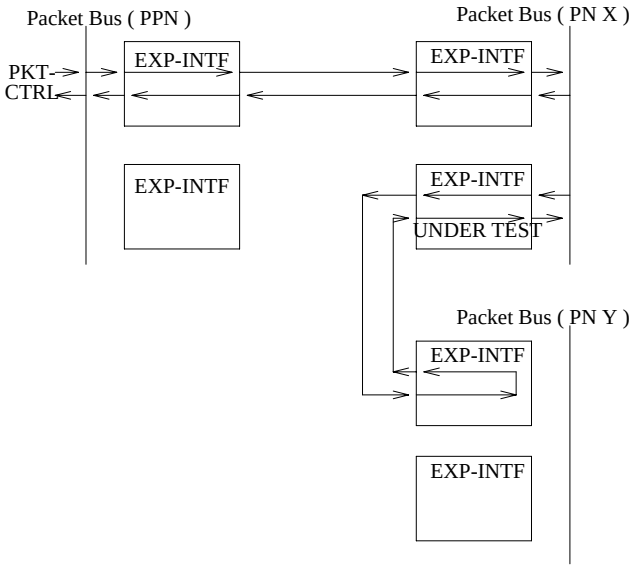

Figure 10-32. Expansion Interface Packet Interface Test—EPN to EPN

Table 10-296. TEST #589 Expansion Interface Packet Interface Test

Error Code	Test Result	Description/Recommendation
1005	ABORT	This test does not apply to the current system configuration. Either the system is not administered to have the Packet Bus activated, the Maintenance-Related System Parameters form has the Packet Bus Enabled field set to "n," or the system is administered to have the Packet Bus activated, but there exist TN776 Expansion Interface circuit packs that prevent this test from running. The TN776 Expansion Interface circuit packs do not support Packet Bus capabilities.
1033	ABORT	The test cannot run because either one or both of the Expansion Interface circuit packs on this link are busied out or an Expansion Interface circuit pack is not present on the opposite end of the fiber. 1. If Expansion Interface is busied out, issue the **release board PCSS** command. 2. Examine the results of Tests #237 and #238.
1139	ABORT	The Packet Bus in an EPN (Port Network 2 or 3) has a major alarm against it. This test needs to use the alarmed port network's packet bus. 1. Resolve the Packet Bus alarm. 2. Retry the command.
1140	ABORT	Not enough packet ports are available to complete this test. 1. If the port network being tested does not contain any packet circuit packs, ignore the results of this test. 2. If the port network being tested does contain packet circuit packs, determine if any or all of them are faulty by examining the alarm and error logs. 3. If any faulty circuit packs are found, refer to the appropriate Maintenance documentation for the recommended repair procedures and try to resolve any problems. Then, retry the command. 4. If no faulty boards are found, all of the ports are busy. Use the **busyout board PCSS** command to busyout a packet circuit pack or wait for one to become idle and retry the command.

Continued on next page

Table 10-296. TEST #589 Expansion Interface Packet Interface Test — *Continued*

Error Code	Test Result	Description/Recommendation
1141	ABORT	The Packet Control circuit pack is out-of-service. 1. Determine if the Packet Control circuit pack is busied out. (This is indicated by an Error Type 18 logged against PKT-CTRL.) If it is, release it via the **release packet-control** command, and retry the command. 2. If the Packet Control circuit pack is NOT busied out, refer to PKT-CTRL Maintenance documentation for the repair procedure for the Packet Control circuit pack.
1144	ABORT	The Packet Bus in the PPN has a major alarm active against it. 1. Resolve the alarm in the PPN. 2. Retry the command.
1195	ABORT	An EI link switched during this test. 1. Retry the command at 1-minute intervals a maximum of 3 times.
1421	ABORT	This abort code is valid and can appear only when the Expansion Interface circuit pack addressed in the test command is one which terminates the link between two the EPNs. It indicates that the test failed, but that this test was run on the EPN EI circuit pack that: a. is in the same EPN as the circuit pack under test, b. is on the active link and c. terminates the fiber from the PPN. The EI tested is probably not at fault. 1. Enter **display alarms** and follow the EXP-INTF repair procedures for the EPN EI that: a. is in the same EPN as the circuit pack just tested here b. is on the active link, and c. terminates the fiber from the PPN. 2. If there are no alarms logged against that EI, run Test #589 on it and follow procedures for this test. 3. Try this command again.

Continued on next page

Table 10-296. TEST #589 Expansion Interface Packet Interface Test — *Continued*

Error Code	Test Result	Description/Recommendation
2060	ABORT	The link on the Packet Bus that is being used to perform the test has failed. 1. Retry the command at 1-minute intervals a maximum of 5 times. 2. If the test continues to abort, check for problems with the Packet Control circuit pack (look for PKT-CTL errors).
2100	ABORT	Could not allocate the necessary system resources to run this test. 1. Retry the command at 1-minute intervals a maximum of 3 times.
2500	ABORT	An internal operation failed; the test could not be completed. 1. Retry the command at 1-minute intervals a maximum of 5 times.

Continued on next page

Table 10-296. TEST #589 Expansion Interface Packet Interface Test — *Continued*

Error Code	Test Result	Description/Recommendation
	FAIL	The transmitted data packet was not received correctly by the Packet Control circuit pack. If there are any PKT-BUS errors in the Error Log, attempt to resolve those errors before investigating these test failures. PROCEDURE A Use Procedure A if the Expansion Interface circuit pack to be tested is in an EPN and is part of an Active link from the PPN to the EPN. 1. Test the Packet Control circuit pack via the **test packet-control** command. If the Packet Control circuit pack fails any tests, refer to the PKT-CTRL Maintenance documentation for recommended maintenance procedures. 2. If all Packet Control circuit pack tests pass, the failure may be in either the PPN Expansion Interface circuit pack or the connected Expansion Interface circuit pack under test or on the EPN Packet Bus. If a duplicate Expansion link exists, make that the Active link, using the **set expansion-link PCSS** command. Execute the **test board long** command on the original Expansion Interface circuit pack and the connected PPN Expansion Interface circuit pack and follow the procedures for Test #242. 3. If a duplicate link does not exist, run the Long Test Sequence on the PPN Expansion Interface circuit pack. If Test #242 fails, follow the procedures for Test #242. If Test #242 passes, the fault is in the EPN Expansion Interface circuit pack under test or on the EPN Packet Bus. *More information follows.*

Continued on next page

Table 10-296. TEST #589 Expansion Interface Packet Interface Test — *Continued*

Error Code	Test Result	Description/Recommendation
	FAIL *(cont'd.)*	PROCEDURE B Use Procedure B if the Expansion Interface circuit pack to be tested is in an EPN and is part of a Standby link from the PPN to the EPN or if the Expansion Interface circuit pack to be tested is in the PPN. 1. Test the Packet Control circuit pack. If the Packet Control circuit pack fails any tests, refer to the PKT-CTRL Maintenance documentation for recommended maintenance procedures. 2. If all Packet Control circuit pack tests pass, the failure may be in either the PPN Expansion Interface circuit pack or the connected EPN Expansion Interface circuit pack. If the circuit pack being tested is in the PPN and is part of an Active link from the PPN to the EPN and if a duplicate Expansion link exists, make that the Active link, using the **set expansion-link PCSS** command. Execute the **test board long** command on the original PPN Expansion Interface circuit pack and the connected EPN Expansion Interface circuit pack and follow the procedures for Test #242. Otherwise, if a duplicate link does not exist, run the Long Test Sequence on the PPN Expansion Interface circuit pack. If Test #242 fails, follow the procedures for Test #242. If Test #242 passes, the fault is in the connected EPN Expansion Interface circuit pack. 3. If the test was not run on an active PPN Expansion Interface circuit pack, issue the **test board PCSS long** command on both Standby Expansion Interface circuit packs and follow the procedures for Test #242. *More information follows.*

Continued on next page

Table 10-296. TEST #589 Expansion Interface Packet Interface Test — *Continued*

Error Code	Test Result	Description/Recommendation
	FAIL *(cont'd.)*	PROCEDURE C Use Procedure C if the Expansion Interface circuit pack to be tested is part of any link from EPN to EPN. 1. Test the Packet Control circuit pack. If the Packet Control circuit pack fails any tests, refer to the PKT-CTRL Maintenance documentation for recommended maintenance procedures. 2. If all Packet Control circuit pack tests pass, the failure may be in the Expansion Interface circuit packs of the EPN to EPN link or on the EPN Packet Bus. 3. Issue the **test board PCSS long** command on both EPN to EPN Expansion Interface circuit packs and follow the procedures for Test #242.
	PASS	The data packet was received correctly. 1. Refer to other Expansion Interface circuit pack tests if the Expansion link is not functioning correctly.
0	NO BOARD	No board was detected by the test. 1. Check the error log for wrong board (error 125) or no board (error 131). Resolve either of these issues, if applicable. 2. Check that the board is properly translated and inserted. If so, check for hyperactivity (error 1538). If hyperactive, use the **reset board PCSS** command. 3. Run the test again. If it fails, the ID chip on board may be bad. Replace the board and retest.

Expansion Interface Link Switch Command

This action is potentially destructive.

The Expansion Interface switch command enables system technician to choose which set of Expansion Interface Links should be the Active link when duplicate Expansion Interface Links are available.

The command line entry is **set expansion-link PCSS**, where PCSS is the Expansion Interface address of *either* Expansion Interface circuit pack on the Standby link. If the **status system** command indicates that the Standby link is up, the **set expansion-link** command makes the Standby link the Active link.

This action is destructive because it must temporarily disable all connections between PPN and EPN. This break in the connections is not detectable by normal voice users.

CAUTION:
Data connections lose a small amount of data. Depending on the data transmission speed, the lost data is anywhere from zero to several bytes.

It is recommended that system technician switch links when it is necessary to run the more destructive tests on Expansion Interface circuit packs. Most significantly, Test #242 requires the Expansion Interface circuit pack to be busied out and, therefore, the link with the Expansion Interface to be tested should be made the Standby link.

To prevent the system from automatically switching Expansion Interface Links during system technician-demanded tests, busyout one or both of the Standby Expansion Interface circuit packs.

CAUTION:
This introduces a small risk. If the remaining Active Expansion Link should fail while the Standby Expansion Link is busied out, service to the EPN is lost.

The **set expansion-link** command has no error codes to return. It displays one of following messages upon completion:

1. **Command completed successfully**

   Link switch was successful. This may be verified by visually inspecting the new yellow LED states or by the **status system** command.

2. **Command did not complete successfully**

   This indicates that the system attempted to switch links, but for unknown reasons the software or hardware was unable to complete the action. The system may have switched and determined that the new link could not provide service and thus returned to the original link.

3. **Standby EXP-INTF Link is unable to take over**

   Because the Expansion Interface circuit pack pair on the Standby link has enough errors logged against it as to be unable to provide service, the system did not attempt to switch links.

4. **EXP-INTF is already on active link**

   The Expansion Interface circuit pack address given in the **set expansion-link** command is an Active Expansion Interface. The address must be a Standby Expansion Interface circuit pack in order to switch links.

5. **Address is not a valid Expansion Interface Board**

   The link switch could not be attempted because the address in the **set expansion-link** command did not correspond to any known Expansion Interface circuit pack.

EXP-LINK (Expansion Interface Link)

MO Name (in Alarm Log)	Alarm Level	Initial Command to Run	Full Name of MO
EXP-LINK	MAJOR	display errors[1]	Expansion Interface Link

1 Display errors for “infc” category and investigate EXP-INTF errors.

The EXP-LINK (Expansion Interface Link) Maintenance strategy is covered in the EXP-INTF (Expansion Interface Circuit Pack) Maintenance documentation.

Error Log Entries and Test to Clear Values

Table 10-297. Expansion Interface Circuit Pack Error Log Entries

Error Type	Aux Data	Associated Test	Alarm Level	On/Off Board	Test to Clear Value
0	0	Any	Any	Any	disp err
122 (a)		None	MAJOR	ON	
122 (b)	None, 1-10	None	MAJOR	ON	
122 (c)	30-40	None	MAJOR	ON	
122 (d)	6	None	MAJOR	ON	
122 (e)	8	None	MAJOR	ON	

Notes:

a. This alarm is used only to indicate that all Expansion Interface Links between a pair of Port Networks (PNs) are down. This condition is indicated by the EXP-LINK Error Type 122 in the Error Log. When this condition occurs, examine all EXP-INTF errors to resolve the alarm.

   The pair of PNs is specified in the port fields as follows: 1-2 (PPN to EPN1), 1-3 (PPN to EPN2), and 2-3 (EPN1 to EPN2).

b. Aux Data values of blank and 1 through 10 mean that the link is down due to a defective Expansion Interface Link. Look for and resolve Expansion Interface circuit pack errors.

c. Aux Data values of 30 through 40 mean that the EPN was reset because of a temporary loss of system timing reference on the EPN. Execute the **display errors** command with the category “tone” to determine what caused the loss or restoration of the clock.

d. The system detected an excessive backup of traffic on the Active Expansion Link. This condition may have been due to communication difficulties on the Expansion Link. To restore normal service, the system had to reset the Expansion port network served by the Expansion Link. Error type 10004 should have been logged against the Expansion Interface circuit pack that reported the traffic congestion.

e. Aux Data value of 8 means that the link is down due to the recovery feature of the EPN Sanity Audit. Look for EPN-SNTY errors in the error log, and refer to the EPN-SNTY section for more details.

EXT-DEV ADMIN? N (External Device Alarm)

MO Name (in Alarm Log)	Alarm Level	Initial Command to Run[1]	Full Name of MO
EXT-DEV	MAJOR	test environment UU	External Device Alarm
EXT-DEV	MINOR	test environment UU	External Device Alarm

1 Where UU is an appropriate cabinet number determined via the PORT field from the Alarm or Error Log.

NOTE:
Use this Maintenance Object when the *External Device Alarm Admin?* field on the *System-parameters Customer-options* form is set to (**n**).

In the Standard Reliability PPN the Maintenance Processor (TN786B or TN2404/TN790) in carrier (A) monitors the EXT-DEV alarm leads. In the High or Critical PPN, the Duplication Interface (TN772) circuit pack in carrier (A) monitors the EXT-DEV alarm leads, and provides status to the Maintenance processor (TN786B or TN2404/TN790) in the active SPE. In the EPN the Maintenance Board (TN775) monitors the EXT-DEV alarm leads. The system only recognizes pairs connected to the 1M and 1m (ALARM MONITOR) leads. Pairs connected to the 2M, 2m, 3M, 3m, and 3w are not recognized by the system.

Hardware Error Log Entries and Test to Clear Values

Table 10-298. Hardware Error Log Entries and Test to Clear Values

Error Type	Aux Data	Associated Test	Alarm Level	On/Off Board	Test to Clear Value
0[1]	0	Any	Any	Any	test environment UU r2 or 6
1 or 5	Any	External Device Alarm Test (#120)	MAJOR MINOR[2]	OFF	test environment UU r 2 or 6

1 Run the Short Test Sequence. If all tests pass, run the Long Test Sequence.
2 One port generates a MAJOR alarm; the other port generates a MINOR alarm.

System Technician-Demanded Tests: Descriptions and Error Codes

Investigate tests in the order presented when inspecting errors in the system. By clearing error codes associated with the *Battery & Battery Charger Query Test,* you may also clear errors generated from other tests in the testing sequence.

Multicarrier Cabinet Tests

Order of Investigation	Short Test Sequence	Long Test Sequence	D/ND[1]
Battery & Battery Charger Query Test (#5) (a)	X	X	ND
AC Power Query Test (#78) (b)	X	X	ND
OLS Query Test (Carrier E) (#127) (c)	X	X	ND
OLS Query Test (Carrier D) (#127) (c)	X	X	ND
OLS Query Test (Carrier A) (#127) (c)	X	X	ND
OLS Query Test (Carrier B) (#127) (c)	X	X	ND
OLS Query Test (Carrier C) (#127) (c)	X	X	ND
Emergency Transfer Query Test (#124) (d)	X	X	ND
Cabinet Sensors Query Test (#122) (e)	X	X	ND
External Device Alarm Test (MAJOR port) (#120)	X	X	ND
External Device Alarm Test (MINOR port) (#120)	X	X	ND
Analog Ring Generator Initialization Test (#117) (f)	X	X	ND
Analog Ring Generator Query Test (#118) (f)	X	X	ND

.

1 D = Destructive; ND = Nondestructive

Notes:

a. Refer to POWER (Battery & Battery Charger) section for a description of this test.

b. Refer to AC-POWER (AC Power) section for a description of this test.

c. Refer to CARR-POW (Carrier Port Power Supply) section for a description of this test.

d. Refer to EMG-XFER (Emergency Transfer) section for a description of this test.

e. Refer to CABINET (Cabinet Sensors) section for a description of this test.

f. Refer to RING-GEN (Analog Ring Generator) section for a description of this test.

Single Carrier Cabinet Tests

Order of Investigation	Short Test Sequence	Long Test Sequence	D/ND[1]
SCC Power Query Test (#79) (a)	X	X	ND
Emergency Transfer Query Test (#124) (b)	X	X	ND
External Device Alarm Test (MAJOR port) (#120)	X	X	ND
External Device Alarm Test (MINOR port) (#120)	X	X	ND
Analog Ring Generator Initialization Test (#117) (c)	X	X	ND
Analog Ring Generator Query Test (#118) (c)	X	X	ND

1 D = Destructive; ND = Nondestructive

Notes:

a. Refer to DC-POWER (Single Carrier Cabinet Power) section for a description of this test.

b. Refer to EMG-XFER (Emergency Transfer) section for a description of this test.

c. Refer to RING-GEN (Analog Ring Generator) section for a description of this test.

External Device Alarm Test (#120)

The External Device Alarm Test requests the state of the External Device Alarm from the Maintenance circuit pack and reports the results. The test has no effect on the external device itself.

Table 10-299. TEST #120 External Device Alarm Test

Error Code	Test Result	Description/Recommendation
1000	ABORT	System resources required to run this test are not available. 1. Retry the command at 1-minute intervals a maximum of 5 times.
2000	ABORT	Response to the test request was not received within the allowable time period. 1. Retry the command at 1-minute intervals a maximum of 5 times. 2. If the test continues to ABORT with error code 2000, check for system powering problems with the A carrier (PPN or EPN). Look for and resolve all AC-POWER and CARR-POW alarms in a multicarrier cabinet or DC-POWER alarms in a single carrier cabinet. Then, repeat the test. 3. If the test continues to ABORT with a 2000 error code, check for and resolve all SYSAM errors in a PPN or MAINT (EPN Maintenance circuit pack) errors in an EPN. Then, repeat the test. 4. If the test continues to ABORT with a 2000 error code, then escalate the problem.

Continued on next page

Table 10-299. TEST #120 External Device Alarm Test — *Continued*

Error Code	Test Result	Description/Recommendation
2029 2319 2320 2500	ABORT	Internal System Error 1. Retry the command at 1-minute intervals a maximum of 5 times.
ANY	FAIL	The External Device Alarm has been activated by the external device. 1. Clear the major alarm on the external device, and rerun the test. 2. If the test still fails, then disconnect the External Device Alarms from the Maintenance circuit pack and rerun the test. 3. If the test still fails, then there is a problem with the Maintenance circuit pack that is reporting the alarm. This circuit pack should be replaced. There are failures that can occur on Maintenance circuit pack's that *will not* be detected by their respective maintenance, but which will cause many environment tests to fail. If many environment tests are failing, the suspect circuit pack should be replaced and the test rerun.
	PASS	If there is a problem with the external device, but the Maintenance circuit pack connected to the device reports no alarm, then the External Device may not be properly reporting the problems or the External Device may not be properly connected to the External Device.

EXT-DEV ADMIN? Y (External Device Alarm)

MO Name (in Alarm Log)	Alarm Level	Initial Command to Run	Full Name of MO
EXT-DEV	MAJOR	test eda-external-device-alrm physical location	External Device Alarm
EXT-DEV	MINOR	test eda-external-device-alrm physical location	External Device Alarm
EXT-DEV	WARNING	test eda-external-device-alrm physical location	External Device Alarm

NOTE:
Use this Maintenance Object when the *External Device Alarm Admin?* field on the *System-parameters Customer-options* form is set to (**y**). You must have INADS or INIT login permission to administer EXT-DEV Alarm.

Maintenance circuit packs each have alarm leads which can be connected to external devices such as Uninterruptible Power Supplies (UPS) or adjuncts such as AUDIX. Certain conditions on the external device close the contacts on the alarm leads to notify the switch which in turn originates an EXT-DEV alarm.

The special locations UUmajor and UUminor are used to designate the major or minor maintenance board alarm connection for cabinet UU. The major/minor designation specifies the port, not the alarm level associated with the connection; *for example,* the “major” port can be administered as a major, minor, or warning alarm, and the “minor” port can be administered as a major, minor or warning alarm. In addition Analog line ports can also be administered as external device alarms.

NOTE:
An unadministered maintenance board external device alarm port, that is sensing a contact closure will have an entry in the Error Log and in the Alarm Log. INADS will not receive warning alarms.

In the Standard Reliability PPN the Maintenance Processor (TN786B or TN2404/TN790) in carrier (A) monitors the EXT-DEV alarm leads. In the High or Critical PPN, the Duplication Interface (TN772) circuit pack in carrier (A) monitors the EXT-DEV alarm leads, and provides the status to the Maintenance processor (TN786B or TN2404/TN790) in the active SPE. In the EPN the Maintenance Board (TN775) monitors the EXT-DEV alarm leads. The system only recognizes pairs connected to the 1M and 1m (ALARM MONITOR) leads. Pairs connected to the 2M, 2m, 3M, 3m, and 3w are not recognized by the system. Refer to the *DEFINITY Communications System Generic 1 and Generic 3i Wiring,* 555-204-111, for more details.

Hardware Error Log Entries and Test to Clear Values

Table 10-300. EXT-DEV ADMIN? Error Log Entries and Test to Clear Values

Error Type	Aux Data	Associated Test	Alarm Level	On/Off Board	Test to Clear Value
0	0	Any	Any	Any	test eda-external-device-alrm physical location r 2 or 6
1 or 5	Any	External Device Alarm Test (#120)	Any	OFF	test eda-external-device-alrm physical location r 2 or 6

NOTE:
The loss of -48 volt power will prevent detection of an external device alarm. AC-POWER, CARR-POW, and DC-POWER alarms could indicate the loss of the external device alarm -48 volt power source. ALARM-PT alarms may also indicate a loss of power. When analog line ports are administered as analog line external device alarms loss of -48 volts will prevent detection of an external device alarm.

System Technician-Demanded Tests: Descriptions and Error Codes

Always investigate tests in the order presented in the table below when inspecting errors in the system. By clearing error codes associated with the *Battery & Battery Charger Query Test,* you may also clear errors generated from other tests in the testing sequence.

Order of Investigation	Short Test Sequence	Long Test Sequence	D/ ND[1]
External Device Alarm Test (MAJOR port) (#120)	X	X	ND
External Device Alarm Test (MINOR port) (#120)	X	X	ND
External Device Alarm Test (WARNING port) (#120)	X	X	ND

1 D = Destructive; ND = Nondestructive

External Device Alarm Test (#120)

The External Device Alarm Test requests the state of the External Device Alarm from a Maintenance circuit pack and reports the results. The test has no effect on the external device itself.

Table 10-301. TEST #120 External Device Alarm Test

Error Code	Test Result	Description/Recommendation
1000	ABORT	System resources required to run this test are not available. 1. Retry the command at 1-minute intervals a maximum of 5 times.
1035	ABORT	The Expansion Port Network containing this equipment is not available Look for and resolve all Expansion Port Network problems with this cabinet.
2000	ABORT	Response to the test request was not received within the allowable time period. 1. Retry the command at 1-minute intervals a maximum of 5 times. 2. (Maintenance Board) If the test continues to ABORT with error code 2000, check for system powering problems with the A carrier. Look for and resolve all AC-POWER and CARR-POW alarms in a multicarrier cabinet or DC-POWER alarms in a single carrier cabinet. Then, repeat the test. 3. (Maintenance Board) If the test continues to ABORT with a 2000 error code, check for and resolve all maintenance circuit pack errors. Then, repeat the test. 4. If the test continues to ABORT with a 2000 error code, then escalate the problem.

Continued on next page

Table 10-301. TEST #120 External Device Alarm Test — *Continued*

Error Code	Test Result	Description/Recommendation
2029 2100 2319 2320 2500	ABORT	Internal System Error 1. Retry the command at 1-minute intervals a maximum of 5 times.
ANY	FAIL	The External Device Alarm has been activated by the external device. 1. Clear the major alarm on the external device, and rerun the test. 2. If the test still fails, then disconnect the External Device Alarm Leads from the Maintenance circuit pack and rerun the test. 3. If the test still fails, then there is a problem with the analog external device alarm port or the Maintenance circuit pack that is reporting the alarm. This circuit pack should be replaced. There are failures that can occur on the Maintenance circuit pack that *will not* be detected by their respective maintenance, but which will cause many environment tests to fail. If many environment tests are failing, the suspect circuit pack should be replaced and the test rerun.

Continued on next page

Table 10-301. TEST #120 External Device Alarm Test — *Continued*

Error Code	Test Result	Description/Recommendation
	PASS	If there is a problem with the external device, but the administered analog line external device alarm, or the administered Maintenance circuit pack connected to the device reports no alarm, then the External Device may not be properly reporting the problems or the External Device may not be properly connected to the External Device Alarm Lead.

FL-DATA (Flash Data Consistency)

MO Name (in Alarm Log)	Alarm Level	Initial Command to Run	Full Name of MO
FL-DATA	MAJOR	test card-mem a|b l	Flash Data Consistency
FL-DATA	MINOR	test card-mem a|b l	Flash Data Consistency
FL-DATA	WARNING	test card-mem a|b l	Flash Data Consistency

In systems with high or critical reliability, the software and the hard patch update files are stored in the on-board flash memory in both the Active SPE and Standby SPE. The translations and announcements are stored in the memory cards in both the Active SPE and Standby SPE. Flash Data Consistency flags problems when files become mismatched by monitoring the translations, announcements, update files, and software vintage number in a High or Critical Reliability PPN system. If the software vintage numbers on both SPEs are mismatched, a MAJOR alarm is raised. If the announcement files on both memory cards are mismatched, a WARNING alarm is raised. For all other problems, a MINOR alarm is raised. The software vintage can be displayed via the **list configuration software-vintage long** command. The Flash Data Consistency Test is run on system technician command and as part of daily Standby SPE maintenance.

NOTE:
Flash Data Consistency is not applicable to Standard systems.

Error Log Entries and Test to Clear Values

Table 10-302. Flash Data Consistency Error Log Entries

Error Type	Aux Data	Associated Test	Alarm Level	On/ Off Board	Test to Clear Value
0[1]	0	Any	Any	Any	test card-mem a/b l
8 or 16	8 or 16	Flash Data Consistency Test (#421)	WNG	OFF	test card-mem a/b
1-3,					
9-10,					
17-18,					
32-34,					
40-42,					
48-50,					

Continued on next page

Table 10-302. Flash Data Consistency Error Log Entries — *Continued*

Error Type	Aux Data	Associated Test	Alarm Level	On/ Off Board	Test to Clear Value
64-66,	8 or 16	Flash Data Consistency Test (#421)	MINOR	OFF	test card-mem a/b l
72-74,					
80-82,					
9-15,					
17-86,					
160, 192,					
288, 320,					
416, 448					
4-6,					
12-14,					
20-22,					
36-38,					
44-46,					
52-54,					
68-70	8 or 16	Flash Data Consistency Test (#421)	MAJOR	OFF	upgrade software
76-78,					
84-86,					
132, 164,					
196, 260,					

Continued on next page

Table 10-302. Flash Data Consistency Error Log Entries — *Continued*

Error Type	Aux Data	Associated Test	Alarm Level	On/ Off Board	Test to Clear Value
292, 324,					
388, 420,					
452					

1 Run the Short Test Sequence first. If all tests pass, run the Long Test Sequence. Refer to the appropriate test description and follow the recommended procedures.

a. The Aux Data field records which SPE was active at the time the Flash Data Consistency Test failed. An “8” in the log refers to carrier A and a “16” refers to carrier B.

System Technician-Demanded Tests: Descriptions and Error Codes

Always investigate tests in the order presented in the table below. By clearing error codes associated with the *Memory Card Insertion Test,* for example, you may also clear errors generated from other tests in the testing sequence.

Order of Investigation	Short Test Sequence	Long Test Sequence	D/ ND[1]
Memory Card Insertion Test (#695) (a)	X	X	ND
Memory Card Format and Read Test (#696) (a)	X	X	ND
Memory Card Match Test (#697) (a)	X	X	ND
Memory Card Write-Protected Test (#698) (a)	X	X	ND
Memory Card Directory Recovery Test (#699) (a)	X	X	ND
Memory Card Translation Data Integrity Test (#694) (a)		X	ND
Memory Card Erase/Write/Read Test (#693) (a)		X	ND
Flash Data Consistency Test (#421) (b)		X	ND

1 D = Destructive; ND = Nondestructive

Notes:

a. See “CARD-MEM” for this test description.

b. The Flash Data Consistency Test does not run in a Standard system.

Flash Data Consistency Check Test (#421)

The software vintage number, translation time stamps, announcement time stamps, and update file time stamps and identifiers are read off of both memory cards or SPEs and then compared. If the comparison shows any discrepancy, FL-DATA is alarmed. This test is only run in a High or Critical Reliability system. The test is run as part of the **test card-mem long** and as part of the standby PE scheduled maintenance.

Table 10-303. TEST #421 Flash Data Consistency Check Test

Error Code	Test Result	Description/Recommendation
0	ABORT	The test timed out without completing. This error can occur when the system is heavily loaded and the test is not allocated sufficient time to run. 1. Rerun the test when the system is less busy and is not running standby maintenance.
1029 1030 2011 2012 2013 2014 2015 2016 2017 2018 2019 2020 2021 2022 2023 2024 2025 2051	ABORT	Refer to the STBY-SPE (Standby SPE) Maintenance documentation for a description of these error codes.
9005	ABORT	Internal system error 1. Retry the command at 1-minute intervals a maximum of 5 times.
35498	ABORT	Difficulty was encountered trying to send information between the SPEs.
35512	ABORT	The Standby SPE cannot be put into maintenance mode. 1. Check for and resolve all DUPINT (Duplication Interface Circuit Pack), SHDW-LNK (Memory Shadowing Link), SHDW-CIR (Common Shadow Circuit), and STBY-SPE (Standby SPE) alarms. 2. Retry the command.
35514	ABORT	Internal system error 1. Retry the command at 1-minute intervals a maximum of 5 times.

Continued on next page

Table 10-303. TEST #421 Flash Data Consistency Check Test — *Continued*

Error Code	Test Result	Description/Recommendation
35534	ABORT	Could not allocate the (active or standby) memory card drive because another memory card operation was in progress. 1. Wait 10 minutes, and retry the command.
35535	ABORT	Could not access the (active or standby) memory card. 1. The memory card may be damaged or missing. Resolve all problems with all memory card tests in the Long Test Sequence for both memory cards. 2. Repeat the test.
1	FAIL	The standby translations are out-of-date. The translations on the Standby SPE (memory card) are older than those on the Active SPE (memory card).
2	FAIL	The Active SPE translations are out-of-date. 1. Issue **save translations** command. If the translation save passes on both SPEs, go to Step 2. 2. Run **test card-mem long** again to resolve the alarms.
4	FAIL	The load vintages are different in both SPEs. 1. Determine the desired software release by issuing the **list configuration software long** command. Obtain the memory card of the same software release. Follow the **upgrade software** procedure to upgrade the out-of-date SPE. 2. Run **test card-mem long** again to resolve alarms.
5	FAIL	The load vintages and translations are different in both SPEs. The Active SPE has the most current translations. 1. Follow the procedures for Error Code 4.
6	FAIL	The load vintages and translations are different in both SPEs. The Standby SPE has the most current translations. 1. Follow the procedures for Error Code 4. 2. Issue **save translations**. If the translation save passes on both SPEs, proceed to Step 3. 3. Run **test card-mem long** again to resolve alarms.

Continued on next page

Table 10-303. TEST #421 Flash Data Consistency Check Test — *Continued*

Error Code	Test Result	Description/Recommendation
8	FAIL	The announcements are different in both SPEs. The Active SPE has the most current announcements. 1. Issue **save announcements** to save announcements in both SPEs. If the announcement save passes on both SPEs, go to Step 2. 2. Run **test card-mem long** to resolve the alarms.
9	FAIL	The translations and announcements are different in both SPEs. The Active SPE is the most current.
10	FAIL	The translations and announcements are different in both SPEs. The Standby SPE has the most current translations, and the Active SPE has the most current announcements. 1. Issue the **save translations** command to save translations in both SPEs. 2. Issue the **save announcements** command to save announcements in both SPEs. 3. If the translation save and announcement save pass on both SPEs, run **test card-mem long** to resolve the alarms.
12	FAIL	Load vintages and announcements are different in both SPEs. The Active SPE has the most current announcements. 1. Follow the procedures for Error Codes 4 and 8.
13	FAIL	The translations, announcements, and load vintages are different in both SPEs. The Active SPE has the most current translations and announcements. 1. Follow the procedures for Error Codes 4 and 10.
14	FAIL	The translations, announcements, and load vintages are different in both SPEs. The Standby SPE has the most current translations, and the Active SPE has the most current announcements. 1. Follow the procedures for Error Code 4. Run **save announcements**.
16	FAIL	Announcements are different in both SPEs. The Standby SPE has the most current announcements. 1. Follow the procedures for Error Code 8.

Continued on next page

Table 10-303. TEST #421 Flash Data Consistency Check Test — *Continued*

Error Code	Test Result	Description/Recommendation
17	FAIL	The translations and announcements are different in both SPEs. The Active SPE has the most current translations and the Standby SPE has the most current announcements.
18	FAIL	The translations and announcements are different in both SPEs. The standby SPE is the most current. 1. Follow the procedures for Error Code 9.
20	FAIL	The load vintages and announcements are different in both SPEs. The Standby SPE has the most current announcements.
21	FAIL	The translations, announcements, and load vintages are different in both SPEs. The Active SPE has the most current translations and the Standby SPE has the most current announcements.
22	FAIL	The translations, announcements, and load vintages are different in both SPEs. The Standby SPE has the most current translations and announcements. 1. Follow the procedures for Error Code 4. Be sure to issue the **save announcements** command.
32	FAIL	The update files are different in both SPEs. The update file on the Active SPE is most current. 1. Have INADS issue the **copy update-file** command. If the update file copy passes, go to Step 2. 2. Reissue **test card-mem long** to resolve the alarms.
33	FAIL	The update files and translations are different in both SPEs. The Active SPE has the most current update file and translations.
34	FAIL	The update files and translations are different in both SPEs. The Active SPE has the most current update file, and the Standby SPE has the most current translations. 1. Issue the **save translations** command to save translations on both SPEs. 2. Have INADS issue the **copy update-file** command to copy the update file from the Active to the Standby SPE. 3. Reissue **test card-mem long** to resolve the alarms.
36	FAIL	The update files and load vintages are different in both SPEs. The Active SPE has the most current update file.

Continued on next page

Table 10-303. TEST #421 Flash Data Consistency Check Test — *Continued*

Error Code	Test Result	Description/Recommendation
37	FAIL	The update files, load vintages, and translations are different in both SPEs. The Active SPE has the most current update file and translations.
38	FAIL	The update files, load vintages, and translations are different in both SPEs. The Active SPE has the most current update file, and the Standby SPE has the most current translations. 1. Follow the procedures for Error Code 4 to get the correct load vintage. After running **test card-mem long**, check for Error Codes 32 or 64. Follow the recovery procedure under the applicable error code.
40	FAIL	The update files and announcements are different in both SPEs. The Active SPE has the most current update file and announcements. 1. Issue **save announcements** to save announcements on both SPEs. 2. Have INADS issue **copy update-file** to copy the update file from the Active to the Standby SPE. 3. Run **test card-mem long** to resolve the alarms.
41	FAIL	The update files, translations, and announcements are different in both SPEs. The Active SPE has the most current update file, translations, and announcements.
42	FAIL	The update files, translations, and announcements are different in both SPEs. The Active SPE has the most current update file and announcements, and the Standby SPE has the most current translations. 1. Issue the **save translations** command. 2. Issue the **save announcements** command. 3. Have INADS issue the **copy update-file** command to copy the update file from the Active to the Standby SPE. 4. Reissue **test card-mem long** to resolve the alarms.

Continued on next page

Table 10-303. TEST #421 Flash Data Consistency Check Test — *Continued*

Error Code	Test Result	Description/Recommendation
44	FAIL	The update files, load vintages, and announcements are different in both SPEs. The Active SPE has the most current update file and announcements.
45	FAIL	The update files, load vintages, translations, and announcements are different in both SPEs. The Active SPE has the most current update file, translations, and announcements.
46	FAIL	The update files, load vintages, translations, and announcements are different in both SPEs. The Active SPE has the most current update file and announcements, and the Standby SPE has the most current translations. 1. Follow the procedures for Error Code 4 to get the correct load vintage. Be sure to save the announcements. After running **test card-mem long**, check for Error Codes 32 or 64. Follow the recovery procedure under the applicable error code.
48	FAIL	The update files and announcements are different in both SPEs. The Active SPE has the most current update file, and the Standby SPE has the most current announcements. 1. Follow the procedures for Error Code 40.
49	FAIL	The update files, translations, and announcements are different in both SPEs. The Active SPE has the most current update file and translations, and the Standby SPE has the most current announcements.
50	FAIL	The update files, translations, and announcements are different in both SPEs. The Active SPE has the most current update file, and the Standby SPE has the most current translations and announcements. 1. Follow the procedures for Error Code 41.

Continued on next page

Table 10-303. TEST #421 Flash Data Consistency Check Test — *Continued*

Error Code	Test Result	Description/Recommendation
52	FAIL	The update files, load vintages, and announcements are different in both SPEs. The Active SPE has the most current update file, and the Standby SPE has the most current announcements.
53	FAIL	The update files, load vintages, translations, and announcements are different in both SPEs. The Active SPE has the most current update file, and translations, and the Standby SPE has the most current announcements.
54	FAIL	The update files, load vintages, translations, and announcements are different in both SPEs. The Active SPE has the most current update file and the Standby SPE has the most current translations and announcements. 1. Follow the procedures for 4 to get the correct load vintage. After running the **test card-mem long**, check for Error Codes 32 or 64. Follow the recovery procedure under the applicable error code.
64	FAIL	The update files are different in both SPEs. The update file on the Standby SPE is the most current. 1. If you are on site with the switch, replace the Active SPE memory card with the Standby SPE memory card. If you are not on site with the switch, issue the **reset system interchange** command. This action causes the Standby SPE to become the Active SPE. Refer to the “Reset Commands” section in Chapter 8, “Maintenance Commands and Trouble-Clearing Aids” for information on the side effects of a processor interchange. 2. Have INADS issue **copy update-file**. If the update file copy passes, go to Step 3. 3. Reissue **test card-mem long** to resolve the alarms.
65	FAIL	The update files and translations are different in both SPEs. The Standby SPE has the most current update file, and the Active SPE has the most current translations.
66	FAIL	The update files and translations are different in both SPEs. The Standby SPE has the most current update file and translations. 1. Issue **save translations** to save translations on both SPEs. 2. Follow the procedures for Error Code 64.

Continued on next page

Table 10-303. TEST #421 Flash Data Consistency Check Test — *Continued*

Error Code	Test Result	Description/Recommendation
68	FAIL	The update files and load vintages are different in both SPEs. The Standby SPE has the most current update file.
69	FAIL	The update files, load vintages, and translations are different in both SPEs. The Standby SPE has the most current update file, and the Active SPE has the most current translations.
70	FAIL	The update files, load vintages, and translations are different in both SPEs. The Standby SPE has the most current update file and translations. 1. Follow the procedures for Error Code 4 to get the correct load vintage. After running **test card-mem long**, check for Error Codes 32 or 64. Follow the recovery procedure under the applicable error code.
72	FAIL	The update files and announcements are different in both SPEs. The Standby SPE has the most current update file and the Active SPE has the most current announcements. 1. Issue the **save announcements** command to save announcements on both SPEs. 2. Follow the procedures for Error Code 64.
73	FAIL	The update files, translations, and announcements are different in both SPEs. The Active SPE has the most current translations and announcements, and the Standby SPE has the most current update file.
74	FAIL	The update files, translations, and announcements are different in both SPEs. The Active SPE has the most current announcements, and the Standby SPE has the most current update file and translations. 1. Issue **save translations**. 2. Issue **save announcements**. 3. Follow the procedures for Error Code 64.

Continued on next page

Table 10-303. TEST #421 Flash Data Consistency Check Test — *Continued*

Error Code	Test Result	Description/Recommendation
76	FAIL	The update files, load vintages, and announcements are different in both SPEs. The Active SPE has the most current announcements, and the Standby SPE has the most current update file.
77	FAIL	The update files, load vintages, translations, and announcements are different in both SPEs. The Active SPE has the most current translations and announcements, and the Standby SPE has the most current update file.
78	FAIL	The update files, load vintages, translations, and announcements are different in both SPEs. The Active SPE has the most current announcements, and the Standby SPE has the most current update file and translations. 1. Follow the procedures for Error Code 4 to get the correct load vintage. After running **test card-mem long**, check for Error Codes 32 or 64. Follow the recovery procedure under the applicable error code.
80	FAIL	The update files and announcements are different in both SPEs. The Standby SPE has the most current update file and announcements. 1. Issue **save announcements** to save announcements on both SPEs. 2. Follow the procedures for Error Code 64.
81	FAIL	The update files, translations, and announcements are different in both SPEs. The Active SPE has the most current translations, and the Standby SPE has the most current update file and announcements.
82	FAIL	The update files, translations, and announcements are different in both SPEs. The Standby SPE has the most current update file, translations, and announcements. 1. Issue the **save translations** command. 2. Issue the **save announcements** command. 3. Follow the procedures for Error Code 64.
84	FAIL	The update files, load vintages, and announcements are different in both SPEs. The Standby SPE has the most current update file and announcements.

Continued on next page

Table 10-303. TEST #421 Flash Data Consistency Check Test — *Continued*

Error Code	Test Result	Description/Recommendation
85	FAIL	The update files, load vintages, translations, and announcements are different in both SPEs. The Active SPE has the most current translations, and the Standby SPE has the most current update file and announcements.
86	FAIL	The update files, load vintages, translations, and announcements are different in both SPEs. The Standby SPE has the most current update file, translations, and announcements. 1. Follow the procedures for Error Code 4 to correct the load vintage. After running **test card-mem long**, check for Error Codes 32 or 64. Follow the recovery procedure under the applicable error code.
128	ABORT	The Translation memory card in the Active SPE is missing.
132	FAIL	The load vintages are different in both SPEs and the translation memory card is missing in the Active SPE. 1. Follow the procedures for Error Code 4 to correct the software vintage. 2. Insert the translation memory card in the Active SPE. 3. Run **test card-mem long** again to resolve alarms.
160	FAIL	The update file in the Active SPE is more current than the Standby SPE and the translation memory card is missing in the Active SPE. 1. Have INADS issue **copy update-file**. If the update file copy passes, proceed to Step 2. 2. Insert the translation memory card in the Active SPE. 3. Reissue **test card-mem long** to resolve the alarms.

Continued on next page

Table 10-303. TEST #421 Flash Data Consistency Check Test — *Continued*

Error Code	Test Result	Description/Recommendation
164	FAIL	The load vintages and the update files are different in both SPEs, and the translation memory card in the Active SPE is missing. The update file in the Active SPE is more current. 1. Both load vintages and update files should not be mismatched.
192	FAIL	The update file in the Standby SPE is more current and the translation memory card is missing in the Active SPE. 1. Follow the procedures for Error Code 160.
196	FAIL	The load vintages and the update files are different in both SPEs, and the translation memory card in the Active SPE is missing. The update file in the Standby SPE is more current. 1. Follow the procedures for Error Code 164.
256	ABORT	Translation memory card is missing in the Standby SPE.
260	FAIL	The load vintages are different in both SPEs and the translation memory card is missing in the Standby SPE. 1. Follow the procedures for Error Code 132.
288	FAIL	The update file in the Active SPE is more current and the translation memory card is missing in the Standby SPE. 1. Follow the procedures for Error Code 160.
292	FAIL	The load vintages and the update files are different in both SPEs, and the translation memory card is missing in the Standby SPE. The update file in the Active SPE is more current. 1. Follow the procedures for Error Code 164.
320	FAIL	The update file in the Standby SPE is more current and the translation memory card is missing in the Standby SPE. 1. Follow the procedures for Error Code 160.
324	FAIL	The load vintages and the update files are different in both SPEs and the translation memory card in the Standby SPE is missing. 1. Follow the procedures for Error Code 164.

Continued on next page

Table 10-303. TEST #421 Flash Data Consistency Check Test — *Continued*

Error Code	Test Result	Description/Recommendation
384	ABORT	The translation memory cards are missing in both SPEs.
388	FAIL	The load vintages are different in both SPEs and the translation memory cards are missing in both SPEs. 1. Follow the procedures for Error Code 132.
416	FAIL	The update file in the Active SPE is more current, and the translation memory cards are missing in both SPEs. 1. Follow the procedures for Error Code 160.
420	FAIL	The load vintages and the update files are different in both SPEs, and the translation memory cards are missing in both SPEs. The update file in the Active SPE is more current. 1. Follow the procedures for Error Code 164.
448	FAIL	The update file in the Standby SPE is more current, and the translation memory cards are missing in both SPEs. 1. Follow the procedures for Error Code 160.
452	FAIL	The load vintages and the update files are different in both SPEs, and the translation memory cards are missing in both SPEs. The update file in the Standby SPE is more current. 1. Follow the procedures for Error Code 164.
	PASS	The load vintages, translations, announcements, and update files are the same.

FW-DWNLD (Firmware Download)

MO Name (in Alarm Log)	Alarm Level	Full Name of MO
FW-DWNLD	MINOR[1]	Firmware Download

1 MINOR alarms can be down-graded to a WARNING level per local instructions by using the set options command.

Firmware Download provides the Avaya DEFINITY Server the ability to download new firmware to one or more circuit packs of the same type, that have the “P” suffix, residing within the same system. The download image is copied onto a source circuit pack, for self download, or target circuit pack, for remote download, using the File Transfer Protocol (FTP). The image is then copied to FLASH memory.

This feature eliminates having to physically remove the circuit pack and sending it to the factory for a firmware update. These procedures apply to these circuit packs (and higher suffixes):

- UDS1 (TN464GP, TN2464BP, and TN2313AP)
- Maintenance/Test (TN771DP)
- Control LAN (C-LAN) (TN799DP)
- IP Media Processor (TN2302AP)
- Voice Announcements over LAN (VAL) (TN2501AP)

Table 10-304 shows the high-level procedures for firmware download.

Table 10-304. Firmware download procedures

Step	Action	No. of circuit packs	Description
1.	See "Hardware/software requirements".	All	Gathering information, downloading new firmware image file from Website.
2.	Choose either: "Self-download" *or* "Remote download"	Single Multiple (same type)	Copying a new firmware image file onto a source circuit pack using the File Transfer Protocol (FTP). Copying the image to the target circuit pack. Replacing the old firmware image file in FLASH memory with the new file.
3.	If you have any trouble with the procedure, refer to the "Troubleshooting firmware downloads" section.	All	"Reset 1 or 2" "Test firmware download" "Backing out of a firmware download"

Updating Firmware on Port Circuit Packs

Hardware/software requirements

The following items are needed to download firmware to the appropriate circuit packs:

DEFINITY ECS

- Use the DEFINITY ECS hardware with the system software releases (Table 10-305):

Table 10-305. DEFINITY ECS hardware and software compatibility

Circuit Pack	System software release		
	Release 9	Release 9.5	Release 10
TN799C (C-LAN)	"Remote download"	"Remote download"	"Remote download"
TN799D (C-LAN)	"Remote download"	"Remote download"	"Self-download" *or* "Remote download"
TN2501AP (VAL)	N/A	"Self-download"	"Self-download"

- A source circuit pack with an Ethernet data module administered to one of its ports
- Target port circuit packs with "P" suffix
- Services login and password
- Clear channel between the source (C-LAN) and target board (remote EPNs only) for remote downloads only.

PC or other server

- IP connectivity to the source board
- IP connectivity to the World Wide Web
- File transfer protocol (FTP) software program

NOTE:
Not all GUI-based FTP applications are compatible with DEFINITY. Command-line FTP applications launched from a DOS prompt or UNIX shell work best.

- Web browser (Netscape 4.5 or Internet Explorer 5 or higher)

Download image from support Web site

For the download, you need a temporary staging area to keep the firmware images before uploading them to the source circuit pack. Although the download is normally done from a PC, you can also use other servers, such as UNIX.

1. Go to the Avaya Customer Support Web site (http://support.avaya.com).
2. Select the **Online Services** link near the top left of the page.
3. Select **Software/Firmware Downloads**.

   A page with a large table appears.
4. Find and click on the following table entry

Grouping	Product Name	Document Title
Communication Systems	Definity Enterprise Communication Server(G3x)	Definity Firmware Downloads

5. The main DEFINITY Firmware Download page appears.
6. Select the circuit pack you want to upgrade, then the firmware images that you need (there may be more than one, depending on the circuit pack).

   For example, the **tn2501ap_f05.bin** filename is for the TN2501AP (VAL) circuit pack.
7. Download the file to the directory from which you will launch the FTP application.

Pre-download checks

At the SAT:

1. Type **change permissions *<login>*** and press Enter.

   Ensure that the `Administer Features` field is **y** on the Command Permissions Categories screen.
2. Get the IP address for the source circuit pack either from the data systems administrator or by typing the following SAT commands:

   a. If you know the circuit pack address, type **list configuration board *<UUCSS>*** and press Enter.

      If you do not know the circuit pack address, type **list configuration all** and press Enter.

      Check that these ports are enabled:

      - Port 17 (C-LAN)
      - Port 33 (VAL)

   b. Type **display port *<UUCSSpp>*** and press Enter to obtain the data module ID, where ***pp*** is the port number.

c. Type **display data-module <*ID*>** and press Enter to obtain the link number.

d. Type **status link <*link_number*>** and press Enter to check the link status and obtain the source IP address.

Self-download

In this procedure you will use an FTP client to copy the new firmware image file to a circuit pack. Then you will copy the new image to the FLASH memory on the pack. This procedure updates *only a single circuit pack* and applies to these circuit packs:

- Control LAN (C-LAN) (TN799DP)
- Voice Announcements over LAN (VAL) (TN2501AP)

Set up file system on circuit pack

Before you can load files onto the source circuit pack, you must first set up a file system on the circuit pack to accept the files.

1. Log onto the switch using superuser or services login and password.
2. Type **enable filesystem board <*UUCSS*> login <*ftplogin*> <*ftppassword*> [*size actual_size*]**, where
   - ***ftplogin*** is any temporary login for this FTP session, for example, ***denver***.
   - ***ftppassword*** is any temporary login for this FTP session, for example, ***broncos***.

   and press Enter.

   You will use this same ***ftplogin*** and ***ftppassword*** later in the "FTP the new firmware image file" section.

   NOTE:
   The ***size actual_size*** qualifier only works with TN799C (C-LAN). It allows you to specify a smaller filesystem size than the default 1MB block (maximum) allocated.

   If the source circuit pack does not have enough available memory, delete old files (**remove file board <*UUCSS*> <*filename*>**) or wait until there is less traffic on the board.

   CAUTION:
   *The ftplogin and ftppassword will remain on the TN799DP (C-LAN) and TN2501AP (VAL) circuit packs until they are reset or until you issue the **disable filesystem board <UUCSS>** command.*

FTP the new firmware image file

The following steps are generic to most FTP programs. Use your laptop/PC/UNIX to complete this procedure.

1. Ensure that the new firmware image file is in the same directory from which you will launch the FTP session.
2. Type **ping *<source_ip_address>*** and press Enter to verify a communication link to the source board.
3. Type **ftp *<source_ip_address>*** and press Enter.
4. Log in to the source circuit pack with the same ***ftplogin*** and ***ftppassword*** that you used in the "Set up file system on circuit pack" section.
   - ***ftplogin*** is any temporary login for this FTP session, for example, ***denver***.
   - ***ftppassword*** is any temporary login for this FTP session, for example, ***broncos***.
5. Type **bin** and press Enter.

   This transfers files in binary format.
6. If you are downloading to the TN2501AP (VAL) circuit pack only, type **cd /** and press Enter.

   This command moves you from the announcement directory (default for FTP sessions) to the root directory (/) where firmware and other files are located.
7. Type **put *<filename.ext>*** and press Enter.

   This command copies the new firmware image file to the destination directory.
8. Type **dir** and press Enter.

   Verify that the new firmware image file is on the circuit pack.
9. Type **quit** and press Enter.

   This ends the FTP session.

Verify files

From the SAT verify that the new firmware image file is on the circuit pack.

1. Type **list directory board *<UUCSS>*** and press Enter.

   The List Directory screen (Screen 10-5) displays.
2. Verify that the new firmware image file is listed in the `File/Directory Name` field.

```
list directory board 1C12                                          Page   1
                                LIST DIRECTORY

  Board                File/Directory                    Creation       Size
 Location                    Name                       Date      Time     Kb

  01C12   F:fwdlimg464gv01                          2000/01/01 00:00:00  367
  01C13   F:fwdlimg2302av01                         2000/02/29 23:59:59  493


D = Directory F = File
```

Screen 10-5. List Directory screen

Schedule download

1. Type **change firmware download** and press Enter.

   The Firmware Download screen (Screen 10-6) appears.

```
change firmware download                                      Page   1 of    1
                                FIRMWARE DOWNLOAD
   Source Board Location: _____
Firmware Image File Name: ____________________________________________
       Target Board Code: ______  Suffix: __  Firmware Vintage: ___
       Schedule Download? _   Remove Image File After Successful Download? _
   Start Date/Time: __/__/____  __:__    Stop Date/Time: __/__/____  __:__

    Target          Target          Target          Target          Target
   Location        Location        Location        Location        Location
 1. _____       11. _____       21. _____       31. _____       41  _____
 2. _____       12. _____       22. _____       32. _____       42  _____
 3. _____       13. _____       23. _____       33. _____       43. _____
 4. _____       14. _____       24. _____       34. _____       44. _____
 5. _____       15. _____       25. _____       35. _____       45. _____
 6. _____       16. _____       26. _____       36. _____       46. _____
 7. _____       17. _____       27. _____       37. _____       47. _____
 8. _____       18. _____       28. _____       38. _____       48. _____
 9. _____       19. _____       29. _____       39. _____       49. _____
10. _____       20. _____       30. _____       40. _____       50. _____

Enter 5 character board number; cabinet(1-30):carrier(A-E):slot(0-20)
         0         2         3         4         5         6         7         8
```

Screen 10-6. Firmware Download screen

2. Fill in the fields listed in Table 10-306:

Table 10-306. Firmware Download fields and descriptions

Field	Description	Notes
`Source Board Location`	Type the UCCSS address of the source circuit pack.	
`Firmware Image File Name`	Type the complete filename (including file extension) of the new firmware image file.	See Screen 10-5 in the "Verify files" section.
`Target Board Code`	Type the circuit pack ID, for example "TN2501." Do not type the "AP" suffix.	Self-download: This must be the same circuit pack type as the source circuit pack. You cannot mix circuit pack types. Remote-download: This must be the same circuit pack as the target circuit pack.
`Suffix`	Examples: For VAL (TN2501AP) type **AP**. For C-LAN (TN799DP), type **DP**. For DS1 (TN464GP), type **GP**.	
`Firmware Vintage`	This is a display-only field for TN799DP (C-LAN) and TN2501AP (VAL).	
`Schedule Download`	Type **y** to schedule the firmware download for another time. Type **n** to start the firmware download immediately after completing the form.	Once the firmware download begins, you cannot make any changes to this form. If you answer **n**(o), then the `Start Date/Time` and `Stop Date/Time` fields do not appear. The download begins as soon as you press Enter.
`Remove Image File After Successful Download`	Type **y** if you want the procedure to automatically remove the new firmware image file [default]. Type **n** if you do not want the new firmware image file removed.	At the completion of a successful download, the procedure automatically removes the new firmware image file from the source filesystem, freeing up the memory on the source circuit pack. We recommend using the default setting. If you set this field to **n**, you must manually remove the new firmware image file from the source filesystem after the download has completed. See "Disable filesystem".

Continued on next page

Table 10-306. Firmware Download fields and descriptions — *Continued*

Field	Description	Notes
`Start Date/Time`	Type the date and time that you want the firmware download to begin.	See the "Check specified resources" section to ensure that the necessary resources are available.
`Stop Date/Time`	Type the date and time that you want the firmware download to end.	If the scheduled stop time is reached before the new firmware image file has been downloaded to all circuit packs, the system finishes downloading to the circuit pack in progress before aborting the remainder of the download schedule.
`Target Location`	Type the UUCSS address of the circuit pack that you are updating.	The circuit pack at this address must be the same type as the source circuit board. You can only put one entry in this field.

3. Submit the schedule.

   If you set the `Schedule Download` field to **n**, the download starts as soon as you submit the schedule.

   NOTE:
   If you receive a SAT error message asking you to use the **test firmware download** command, this means that there was a problem with a previous firmware download. Run the test before proceeding.

   CAUTION:
   The ftplogin and ftppassword will remain on the TN799DP (C-LAN) and TN2501AP (VAL) circuit packs until they are reset or until you issue the ***disable filesystem board <UUCSS>*** *command.*

4. If you are self-downloading to a TN2501AP (VAL) circuit pack, reseat the pack:

   CAUTION:
   Ensure that both the top green and top amber LEDs are out.

   a. Release the latch handle to free the circuit pack from the carrier.
   b. Pull the circuit pack out approximately 1-2 inches (2.54 to 5.08 cm.).
   c. Re-insert the circuit pack into the carrier.
   d. Close the latch securely.

Check specified resources

This procedure checks the header on the new firmware image file to ensure that the firmware download will run as you intend.

1. Type **test firmware download** and press Enter.

   The Test Results screen (Screen 10-7) appears.

```
test firmware download                                                SPE A

                                TEST RESULTS

Port        Maintenance Name  Alt. Name Test No. Result            Error Code

            FW-DWNLD                    1413     PASS
```

Screen 10-7. Test Results screen

2. Look in the `Result` field for `FAIL` conditions.
3. If the test does not pass, refer to the "Error Log Entries and Test to Clear Values" section.Resolve all errors.
4. Re-run the test (**test firmware download**).

When the test passes, all specified resources are available for the scheduled download.

Monitor download progress

1. Type **status firmware download** and press Enter.

   The Status Firmware Download screen (Screen 10-8) displays.

```
status firmware download                                        Page   1 of    1
                                  STATUS FIRMWARE DOWNLOAD
   Source Board Location: 01C02
Firmware Image File Name: tn2501ap_f05.bin
       Target Board Code: TN2501 Suffix: AP Firmware Vintage: __
       Schedule Download? _   Remove Image File After Successful Download? _
   Start Date/Time: 01/12/2001  13:30    Stop Date/Time: 01/14/2001  16:30

    Target          Target          Target          Target          Target
   Location St     Location St     Location St     Location St     Location St
 1.01C02    P   11. _____   _   21. _____   _   31. _____   _   41  _____   _
 2. _____   _   12. _____   _   22. _____   _   32. _____   _   42  _____   _
 3. _____   _   13. _____   _   23. _____   _   33. _____   _   43. _____   _
 4. _____   _   14. _____   _   24. _____   _   34. _____   _   44. _____   _
 5. _____   _   15. _____   _   25. _____   _   35. _____   _   45. _____   _
 6. _____   _   16. _____   _   26. _____   _   36. _____   _   46. _____   _
 7. _____   _   17. _____   _   27. _____   _   37. _____   _   47. _____   _
 8. _____   _   18. _____   _   28. _____   _   38. _____   _   48. _____   _
 9. _____   _   19. _____   _   29. _____   _   39. _____   _   49. _____   _
10. _____   _   20. _____   _   30. _____   _   40. _____   _   50. _____   _

Status: Pending(P) Completed(C) Failed(F) Aborted (A)
```

Screen 10-8. Status Firmware Download screen

2. If this form is blank after issuing the command, go to Step 4.
3. Check the `St` (status) field immediately to the right of the `Target Location` field's address of the circuit pack to view the progress of the firmware update:
   - **(P)**ending
   - **(C)**ompleted
   - **(F)**ailed
   - **(A)**borted
4. Type **status firmware download *last*** and press Enter.

   This allows you to view the progress of the last completed firmware update or the entire schedule if it is completed.

CAUTION:
*The ftplogin and ftppassword will remain on the TN799DP (C-LAN) and TN2501AP (VAL) circuit packs until they are reset or until you issue the **disable filesystem board <UUCSS>** command.*

5. If you are self-downloading to a TN2501AP (VAL) circuit pack, reseat the pack:

   CAUTION:
   Ensure that both the top green and top amber LEDs are out.

   a. Release the latch handle to free the circuit pack from the carrier.
   b. Pull the circuit pack out approximately 1-2 inches (2.54 to 5.08 cm.).
   c. Re-insert the circuit pack into the carrier.
   d. Close the latch securely.

Aborting a firmware download

If you need to abort a scheduled (pending) firmware download:

1. Type **disable firmware download** and press Enter.

   This command

   - Continues to download the firmware image file to circuit pack in progress.
   - Aborts the remainder of the download schedule.
   - Clears the contents of the Firmware Download screen (Screen 10-8).

Remote download

This procedure allows you to update up to 50 target circuit packs of the same type using a new firmware image file distributed from a TN799C/DP (C-LAN) source circuit pack. This procedure updates these target circuit packs:

- UDS1 (TN464GP, TN2464BP, and TN2313AP)
- Maintenance/Test (TN771DP)
- IP Media Processor (TN2302AP)

Preparation

See ''Hardware/software requirements''.

Set up file system on circuit pack

Before you can load files onto the source circuit pack, you must first set up a file system on the circuit pack to accept the files.

1. Log onto the switch using superuser or services login and password.
2. Type **enable filesystem board *<UUCSS>* login *<ftplogin>* *<ftppassword>* *[size actual_size]***, where
   - ***ftplogin*** is any temporary login for this FTP session, for example, ***denver***.
   - ***ftppassword*** is any temporary login for this FTP session, for example, ***broncos***.

   and press Enter.

   You will use this same ***ftplogin*** and ***ftppassword*** later in the "FTP the new firmware image file" section.

   NOTE:
   The ***size actual_size*** qualifier only works with TN799C (C-LAN). It allows you to specify a smaller filesystem size than the default 1MB block (maximum) allocated.

   If the source circuit pack does not have enough available memory, delete old files (**remove file board *<UUCSS>* *<filename>***) or wait until there is less traffic on the board.

   CAUTION:
   *The ftplogin and ftppassword will remain on the TN799DP (C-LAN) and TN2501AP (VAL) circuit packs until they are reset or until you issue the **disable filesystem board <UUCSS>** command.*

FTP the new firmware image file

The following steps are generic to most FTP programs. Use your laptop/PC/UNIX to complete this procedure.

1. Ensure that the new firmware image file is in the same directory from which you will launch the FTP session.
2. Type **ping *<source_ip_address>*** and press Enter to verify a communication link to the source board.
3. Type **ftp *<source_ip_address>*** and press Enter.
4. Log in to the source circuit pack with the same ***ftplogin*** and ***ftppassword*** that you used in the "Set up file system on circuit pack" section.
   - ***ftplogin*** is any temporary login for this FTP session, for example, ***denver***.
   - ***ftppassword*** is any temporary login for this FTP session, for example, ***broncos***.

5. Type **bin** and press Enter.

   This transfers files in binary format.

6. Type **put *<filename.ext>*** and press Enter.

   This command copies the new firmware image file to the destination directory.

7. Type **dir** and press Enter.

   Verify that the new firmware image file is on the circuit pack.

8. Type **quit** and press Enter.

   This ends the FTP session.

Verify files

From the SAT verify that the new firmware image file is on the circuit pack.

1. Type **list directory board *<UUCSS>*** and press Enter.

   The List Directory screen (Screen 10-9) displays.

2. Verify that the new firmware image file is listed in the `File/Directory Name` field.

```
list directory board 1C12                                          Page   1
                                  LIST DIRECTORY

  Board                File/Directory                     Creation       Size
 Location                   Name                        Date      Time     Kb

  01C12   F:fwdlimg464gv01                          2000/01/01 00:00:00  367
  01C13   F:fwdlimg2302av01                         2000/02/29 23:59:59  493



D = Directory F = File
```

Screen 10-9. List Directory screen

Schedule download

1. Fill in all of the fields in Table 10-306 except the `Target Location` field.

   NOTE:
   If you are scheduling firmware downloads for a circuit pack that is designated as primary/secondary sync (timing) source (for example, TN464GP), this procedure automatically redesignates a local timing source during the download. After the download is complete and the circuit pack is returned to service, the procedure designates the original circuit packs as the timing source.

NOTE:
The target circuit packs are automatically busied out before the firmware is downloaded to them and automatically returned to service after the download is completed. While a DS1 circuit pack is busied out, any active calls through that circuit pack are dropped.

2. In the `Target Location` field, type the UUCSS address of each similar-type, programmable circuit pack (up to 50).

NOTE:
You can only download one image file to a similar type circuit pack at a given time (for example, to all the TN464GP circuit packs). The download process *does not* support broadcasting more than one image file to different-type circuit packs (for example, from TN464GP to TN2313BP).

If you do not know the target board locations:

a. Type **list configuration all** and press Enter.

The System Configuration screen (Screen 10-10) appears.

```
list configuration all


                              SYSTEM CONFIGURATION

Board                                                          Assigned Ports
Number Board Type              Code     Vintage    u=unassigned t=tti p=psa

01A13  IP MEDIA PROCESSOR      TN2302AP HW03 FW016 01 02 03 04 05 06 07 08

01A14  CONTROL-LAN             TN799B   000002     u  u  u  u  u  u  u  u
                                                   u  u  u  u  u  u  u  u 17

01A15  DIGITAL LINE            TN754B   000002     01 02 03 04 05 06 07 08
01A16  BRI LINE                TN556B   000006     01 01 02 02 t  t  04 04
                                                   05 05 06 06 07 07 08 08
                                                   09 09 10 10 11 11 12 12
01A    PROCESSOR               TN2404   000003

01A    PROCR INTERFACE 1       TN765    000016     u  u  u  u
01A    NETCON/PKTINT           TN2401   000003     01 02 03 04 05 06 07 08
01A    TONE/CLOCK              TN2182B  000001     01 02 03 04 05 06 07 08
01D13  DS1 INTERFACE           TN2464BP HW00 FW101 01 02 03 04 05 u  u  u
                                                   u  u  u  u  u  u  u  u
                                                   u  u  u  u  u  u  u  u
                                                   u  u  u  u  u  u  u  u
```

Screen 10-10. System Configuration screen

b. Look for the “P” suffix in the `Code` column and note the circuit pack’s UUCSS address in the `Board Number` field.

c. Type the UUCSS address of all similar type circuit packs in the `Target Location` field.

3. Submit the schedule.

   If you set the `Schedule Download` field to **n**, the download starts as soon as you submit the schedule.

   NOTE:
   If you receive a SAT error message asking you to use the **test firmware download** command, this means that there was a problem with a previous firmware download. Run the test before proceeding.

Check specified resources

This procedure checks the header on the new firmware image file to ensure that the firmware download runs as you intend.

1. Type **test firmware download** and press Enter.

   The Test Results screen (Screen 10-11) appears.

```
test firmware download                                                  SPE A

                                TEST RESULTS

Port        Maintenance Name  Alt. Name Test No. Result            Error Code

            FW-DWNLD                    1413     PASS
```

Screen 10-11. Test Results screen

2. Look in the `Result` field for `FAIL` conditions.
3. If the test does not pass, refer to the ''Error Log Entries and Test to Clear Values'' section.Resolve all errors.
4. Re-run the test (**test firmware download**).

When the test passes, all specified resources are available for the scheduled download.

Monitor download progress

1. Type **status firmware download** and press Enter.

   The Status Firmware Download screen (Screen 10-12) displays.

```
status firmware download                                          Page   1 of    1
                                   STATUS FIRMWARE DOWNLOAD
   Source Board Location: 01C02
Firmware Image File Name: usd1v22r1
       Target Board Code: TN464 _ Suffix: GP Firmware Vintage: _1
       Schedule Download? _   Remove Image File After Successful Download? _
   Start Date/Time: 01/12/2001  13:30    Stop Date/Time: 01/14/2001  16:30

    Target          Target          Target          Target          Target
   Location St     Location St     Location St     Location St     Location St
 1.01C04    C   11. _____   _   21. _____   _   31. _____   _   41  _____   _
 2.01C06    C   12. _____   _   22. _____   _   32. _____   _   42  _____   _
 3.01C08    P   13. _____   _   23. _____   _   33. _____   _   43. _____   _
 4. _____   _   14. _____   _   24. _____   _   34. _____   _   44. _____   _
 5. _____   _   15. _____   _   25. _____   _   35. _____   _   45. _____   _
 6. _____   _   16. _____   _   26. _____   _   36. _____   _   46. _____   _
 7. _____   _   17. _____   _   27. _____   _   37. _____   _   47. _____   _
 8. _____   _   18. _____   _   28. _____   _   38. _____   _   48. _____   _
 9. _____   _   19. _____   _   29. _____   _   39. _____   _   49. _____   _
10. _____   _   20. _____   _   30. _____   _   40. _____   _   50. _____   _

Status: Pending(P) Completed(C) Failed(F) Aborted (A)
```

Screen 10-12. Status Firmware Download screen

Aborting a firmware download

If you need to abort a scheduled (pending) firmware download:

1. Type **disable firmware download** and press Enter.

   This command

   - Continues to download the firmware image file to circuit pack in progress.
   - Aborts the remainder of the download schedule.
   - Clears the contents of the Status Firmware Download screen (Screen 10-12).

Disable filesystem

*Performing the following steps on the TN799DP (C-LAN) or TN2501AP (VAL) circuit packs, removes only the **ftplogin** and the **ftppassword**. The allocated memory for the file system remains reserved for the session.*

To free up resources on the source circuit pack, you must delete the new firmware image files and disable the filesystem.

1. Type **remove file board *<UUCSS> <filename>*** and press Enter to remove image files from the source board.

2. Type **list directory board <*UUCSS*>** and press Enter.

   The List Directory screen (Screen 10-5) appears.

3. Verify that the new firmware image file is *not* listed in the `File/Directory Name` field.

4. Type **disable filesystem board <*UUCSS*>** and press Enter to disable the filesystem on the source circuit pack.

   NOTE:
   This command is only successful if no files remain on the source circuit pack.

Troubleshooting firmware downloads

This section contains three troubleshooting sections:

- "Reset 1 or 2"
- "Test firmware download"
- "Backing out of a firmware download"

Reset 1 or 2

If the system does a reset 1 or 2 and no alarms are present:

1. At the SAT type **display initcauses** and press RETURN.
2. Clear any errors.
3. Perform the procedures in the "Error Log Entries and Test to Clear Values" section.

Test firmware download

To test the firmware download process:

1. At the SAT type **test firmware download** and press RETURN.

   The Test Results screen (Screen 10-13) appears.

```
test firmware download                                          SPE A

                                TEST RESULTS

Port        Maintenance Name  Alt. Name Test No. Result          Error Code

            FW-DWNLD                    1413     PASS
```

Screen 10-13. Test Results screen

2. The example in Screen 10-13 shows PASS in the `Result` field, indicating a successful test of the firmware download circuitry.

   If the test does not pass, refer to the ''Error Log Entries and Test to Clear Values'' section.

Backing out of a firmware download

To revert back to the old firmware image file *on TN799DP (C-LAN) or TN2501AP (VAL) only*:

1. At the SAT type **get boot-image *<UUCSS>*** and press RETURN to check the status of the firmware images on the target circuit pack.

   The Display Firmware Image(s) report (Screen 10-14) appears.

```
get boot-image 1C07

                            DISPLAY FIRMWARE IMAGE(S)

              Image 1         Image 2

  Board Type: TN2501          TN2501
  FW Vintage: 02              01
HW Signature: 02              02
      Suffix: A               A
        Date: 03/02/02        03/02/01
   Timestamp: 10:30:50        12:42:18
CRC Checksum: Good            Good
Active Image: Yes             No
Reboot Image: Yes             No
```

Screen 10-14. Display Firmware Image(s) screen

2. Check the date and time stamps to determine whether to revert back to `Image 1` or `Image 2`. In the example that follows, we are reverting back to Image 2, because it has the older date and time stamp.

3. At the SAT type **set boot-image board *<UUCSS>* image *<1 | 2>*** and press Enter.

   Example: **set boot-image board *1C07* image *2***

   NOTE:
   In most cases the image with the more recent date and time stamp is the new firmware image file.

   The system responds with Command Successfully Completed.

4. At the SAT type **get boot-image <*UUCSS*>** and press RETURN to check the status of the firmware images on the target circuit pack.

   The Display Firmware Image(s) report (Screen 10-15) appears.

```
get boot-image 1C07

                            DISPLAY FIRMWARE IMAGE(S)

              Image 1        Image 2

  Board Type: TN2501         TN2501
  FW Vintage: 02             01
HW Signature: 02             02
      Suffix: A              A
        Date: 03/02/02       03/02/01
   Timestamp: 10:30:50       12:42:18
CRC Checksum: Good           Good
Active Image: Yes            No
Reboot Image: No             Yes
```

Screen 10-15. Display Firmware Image(s) screen

Note that the values in both the `Active Image` and the `Reset Image` fields have changed.

5. Reseat the circuit pack to activate the new firmware image:

WARNING:
To prevent electrostatic discharge (ESD), be sure to wear a grounding strap while handling the circuit pack.

CAUTION:
For TN2501AP (VAL) ensure that both the top green and top amber LEDs are out.

   a. Release the latch handle to free the circuit pack from the carrier.
   b. Pull the circuit pack out approximately 1-2 inches (2.54 to 5.08 cm.).
   c. Re-insert the circuit pack into the carrier.
   d. Close the latch securely.

   Wait until all 3 of the top LEDs (red, green, and amber) are out.

6. At the SAT type **get boot-image *<UUCSS>*** and press RETURN to check the status of the firmware images on the target circuit pack.

   The Display Firmware Image(s) report (Screen 10-16) appears.

```
get boot-image 1C07

                          DISPLAY FIRMWARE IMAGE(S)

              Image 1        Image 2

  Board Type: TN2501         TN2501
  FW Vintage: 02             01
HW Signature: 02             02
      Suffix: A              A
        Date: 03/02/02       03/02/01
   Timestamp: 10:30:50       12:42:18
CRC Checksum: Good           Good
Active Image: No             Yes
Reboot Image: No             Yes
```

Screen 10-16. Display Firmware Image(s) screen

7. Ensure that both the `Active Image` and the `Reset Image` fields are as you expect.

Error Log Entries and Test to Clear Values

Table 10-307. FW-DWNLD Maintenance Error Log Entries

Error Type	Aux Data	Cause Of Error	Alarm Level	On/ Off Board	Test to Clear Value
257(a)	See note	Download failure	MINOR	OFF	**test firmware download UUCSS**
258(b)	See note	Download failure	MINOR	OFF	**test firmware download UUCSS**
259(c)	See note	Download failure	MINOR	OFF	**test firmware download UUCSS**
513(d)	See note	Download failure	MINOR	OFF	**test firmware download UUCSS**
796(e)	See note	Firmware download request	MINOR	OFF	**test firmware download UUCSS**

Notes:

a. **Error Type 257** — a log only error indicating that a certain software resource was not available. Such an error very seldom occurs and usually produces a proc_err. However, in the firmware download feature, the file cannot be downloaded and/or the schedule can also abort/fail. To resolve the error, use the **test firmware download** command. The Aux Data specifies the error that resulted from the resource not being available. See Table 10-308 for more details.

Table 10-308. Error Type 257 Aux Data

Aux Data	Description of Failure
1	Source board query failed - Check for system wide problems, clear all errors and retry the download.
2	Target board query failed - Check for system wide problems, clear all errors and retry the download.
3	Allocating resources failed - Check for system wide problems, clear all errors and retry the download.
4	Firmware Download Information table query failed - Check for system wide problems, clear all errors and retry the download.
5	Header message failed - Check for system wide problems, clear all errors and retry the download.
6	Download Map timer expired - Check for system wide problems, clear all errors and retry the download.

b. **Error Type 258** — a log only error indicating that a source board related error occurred. The download schedule can also abort/fail. To resolve the error, use the command **test firmware download**. The Aux Data specifies the error. See Table 10-309 for more details.

Table 10-309. Error Type 258 Aux Data

Aux Data	Description of Failure
1	Download image file specified on the **change firmware download** screen not present on the source board, use the **list dir** command to verify file system contents.
2	The image on the source board has an invalid header, retry then escalate.
3	Bad CRC on image file on source board, retry then escalate.
4	File name too long, rename then try again.
5	Invalid TN code on the **change firmware download** screen does not match TN code of image on the source board. Verify screen, make sure the correct image is being used.
6	Invalid suffix on the **change firmware download** screen does not match suffix of image on the source board. Verify screen, make sure the correct image is being used.

Continued on next page

Table 10-309. Error Type 258 Aux Data — *Continued*

Aux Data	Description of Failure
7	Source board not present, verify entry on the **change firmware download** screen, and translations.
8	Incorrect source board, verify that the source board is the correct TN code.
9	PPP ports not available, use another source board or reschedule the download for off hours.
10	DL Setup message to source failed. Retry download and if download still fails escalate.

c. **Error Type 259** — a log only error indicating that the target board failed to download. To resolve the error, use the command **test firmware download**. The Aux Data specifies the error. See Table 10-310 for more details.

Table 10-310. Error Type 259 Aux Data

Aux Data	Description of Failure
1	Target board not present / not responding, check board location, translations and retry.
2	Incorrect target board for download schedule, verify board location, and schedule.
3	Target failed to go into DL Mode, retry
4	Target received bad file header
5	Bad image checksum on image on source board, get new image retry.
6	TFTP protocol error - One reason for this type of failure could be that the target board has ami-zcs line coding, and is located in a EPN with ami-zcs line coding between the source and target board. To have a successful firmware download you must have a clear channel between the source and target board. Some examples of the correct type of line coding for this feature are: b8zs, and hdb3.
7	File transfer timer expired, check board location, translations and retry.
8	Target failed to reset after transfer, check board location, translations and retry.
9	Download of target failed, check location, translations, and retry.

Continued on next page

Table 10-310. Error Type 259 Aux Data

Aux Data	Description of Failure
10	The target board rejected the download image. Check translations, verify image file, retry then escalate.
20	Could not open the requested file - Internal firmware error on target board, retry download if fail then escalate.
21	Problem reading the requested file - Internal firmware error on target board, retry download if fail then escalate
22	The download file has a bad CRC - Internal firmware error on target board, retry download if fail then escalate
24	A download is already in progress - Internal firmware error on target board, retry download if fail then escalate
30	A start download sequence error - Internal firmware error on target board, retry download if fail then escalate
32	The file name is too long - Internal firmware error on target board, retry download if fail then escalate
40	FLASH programming failed on firmware - Internal firmware error on target board, retry download if fail then escalate

d. **Error Type: 513** — indicates that the schedule has failed. Failure of the schedule can result from any of the previously mentioned log only errors (257 - 259), the schedule timer expiring, or the **disable firmware download** command. To resolve the error and clear the alarm, use the command **test firmware download**. The Aux Data specifies the reason why the schedule failed. See the table below for more details.

Table 10-311. Error Type 513 Aux Data

Aux Data	Description of Failure
1	Software resources not available; see Error Type 257(a)
2	Source board related failure; see Error Type 258(b)
3	A target board failed; see Error Type 259(c). Check image, translations and retry.
4	Two consecutive target boards failed, download schedule aborted. Verify download image, translations, and retry.
5	Schedule timer expired, schedule unfinished target boards and retry.
6	**disable firmware download** command executed

e. **Error Type: 769** — indicates that a downloadable board image is bad and a good image needs to be downloaded. This is not a result of a failed download attempt. The Aux Data specifies the board location in UUCSS format.

System Technician-Demanded Tests: Descriptions and Error Codes

The Firmware Download Maintenance Object (FW-DWNLD) is a non-traditional MO. As a result, the associated test, *Test Firmware Download (#1413)* is a non-traditional test. This test is not executed in the traditional manner but is executed as a part of scheduling, verifying, and running a firmware download schedule.

There are no System Technician demand tests as such for this maintenance object.

Test Firmware Download (#1413)

This is a destructive test.

This test has two functions and can only be executed if there is a download schedule to verify or there are FW-DWNLD errors to be resolve and alarms to clear.

1. This test verifies that the information on the FIRMWARE DOWNLOAD screen is correct. It also verifies that the source board is of the correct type, that the file to be downloaded is present on that source board, and that the file is error free. In addition it verifies that the target board code and suffix are correct. It also retrieves the new firmware vintage for the target board and populates the appropriate field in the firmware download table.
2. If this test is executed after a FIRMWARE DOWNLOAD schedule has run, and there are FW-DWNLD alarms/errors, it resolves the errors, clears the alarms, copies the current download status table to the last table, and clears out the current table.

Table 10-312. TEST #1413 Firmware Download Test

Error Code	Test Result	Description/ Recommendation
	ABORT	Internal system error Retry the command at 1-minute intervals a maximum of 5 times.
2100	ABORT	System resources required for this test are not available. Retry the command at 1-minute intervals a maximum of 5 times.

Continued on next page

Table 10-312. TEST #1413 Firmware Download Test — *Continued*

Error Code	Test Result	Description/ Recommendation
1	FAIL	The firmware image file entered on the **change firmware download** screen is not present on the source board specified in the screen: Execute **list directory** and verify that a file system is enabled on the board and the file is present. If the file system is not enabled, execute the enable filesystem command and FTP the correct firmware image to the source board. If the correct image file is present, then the name entered on the screen is incorrect. Execute **change firmware download** and enter the correct file name.
2	FAIL	The image file header on the source board is invalid. FTP a good firmware image file to the source board
3	FAIL	Firmware image file on the source board has a bad CRC. FTP a good firmware image file to the source board.
4	FAIL	Firmware image file name is too long. Rename the image file to a file name of the correct size. FTP the new image file to the source board. Execute **change firmware download** and enter the new file name on the screen.
5	FAIL	The TN code of the firmware image file on the source board does not match the TN code entered on the screen. The firmware file is incorrect for the board type entered on the screen. Execute the **list directory** command and verify that a file system is enabled on the board and the file is present. If the file system is not enabled, execute **enable filesystem** and FTP the correct firmware image to the source board. Execute **change firmware download** and enter the new file name on the screen.

Continued on next page

Table 10-312. TEST #1413 Firmware Download Test — *Continued*

Error Code	Test Result	Description/ Recommendation
6	FAIL	The suffix of the firmware image file on the source board does not match the suffix entered on the screen. The firmware image file is incorrect for the board types entered on the screen. Execute **list directory** and verify that a file system is enabled on the board and the file is present. If the correct firmware image is not present, FTP the correct firmware image to the source board. Execute **change firmware download** and enter the new file name on the screen.
7	FAIL	The source board entered on the screen is not present. Execute **display firmware download** and verify the source board location. Verify the source boards translations. If the location is incorrect, execute **change firmware download** and enter the correct location on the screen
8	FAIL	The source boards entered on the screen are incorrect. The board could have been changed after the schedule was entered. Execute **list config**. verify the source board location. Execute **change firmware download** and enter the correct location on the screen.
	PASS	Firmware download to this circuit pack is successful.
0	NO BOARD	The test could not relate the internal ID to the port (no board). This could be due to incorrect translations, no board is inserted, an incorrect board is inserted, or an insane board is inserted. Ensure that the board translations are correct. If the board was already administered correctly, check the error log to determine whether the board is hyperactive. If this is the case, the board is shut down. Reseating the board re-initializes the board. If the board was found to be correctly inserted in step 1, then issue the **busyout board UUCSS** command. Issue the **reset board UUCSS** command. Issue the **release board UUCSS** command. Issue the **test board UUCSS long** command. This should re-establish the linkage between the internal ID and the port.

GPTD-PT [General Purpose Tone Detector Port (CPTR)]

MO Name (in Alarm Log)	Alarm Level	Initial Command to Run[1]	Full Name of MO
GPTD-PT	MAJOR	test port PCSSpp sh	General Purpose Tone Detector Port (CPTR)
GPTD-PT	MINOR	test port PCSSpp sh	General Purpose Tone Detector Port (CPTR)
GPTD-PT	WARNING	release port PCSSpp	General Purpose Tone Detector Port (CPTR)

1 Where P is the port network number (1 for PPN and 2 or 3 for EPN); C is the carrier designation (for example, A, B, C, D, or E); SS is the address of the slot in the carrier where the circuit pack is located (for example, 01, 02, etc.); and pp is the 2-digit port number (for example, 01).

The General Purpose Tone Detector (GPTD) Port, also known as Call Progress Tone Receiver (CPTR), resides on the Tone Detector circuit pack (TN748 [all suffixes], TN420B [and greater suffixes], and TN756 combined tone detector and tone clock [all suffixes]). There are two GPTD ports and four Dual Tone Multifrequency Receiver (DTMR) ports on a Tone Detector circuit pack. The GPTD port is used to perform level measurements of test tones and to detect call progress tones. Examples of call progress tones are dial tone, ring back, busy, alert, confirmation, and recall dial. The abilities of the GPTD port to perform level measurements of test tones and to detect call progress tones are essential for maintenance of other circuit packs (for example, Tone-Clock).

The GPTD maintenance feature defines a set of tests to ensure that the general purpose tone detection capability of the GPTD port is functioning properly. For all Tone Detector circuit pack level errors (DETR-BD), refer to the XXX-BD (Common Port Circuit Pack) Maintenance documentation.

H323-BCH (H.323 B-Channel)

No maintenance diagnostic tests exist for this object.

H.323 signaling is very similar to ISDN Q.931 signaling. In order to take advantage of existing DEFINITY ISDN call processing software, H.323 trunk call processing includes H.323 signaling groups, H.323 D-channels and H.323 B-channels. H.323 Signaling groups are similar in concept to ISDN PRI signaling groups. H.323 D-channels are an artificial fabrication created only to allow maximum re-use of system ISDN code. H.323 B-channels are also an artificial fabrication.

No physical hardware components make up the H.323 B-channel object discussed here. Along with the D-channel, these objects allow existing ISDN call processing to be re-used for H.323 trunking. The H.323 signaling group is not a collection of physical D-channels that exist on one or more DS1 facilities. The H.323 signaling group can be considered to be one D-channel that physically rides on a C-LAN port and the IP network. Unlike ISDN D-channels, the H.323 D-channel may actually come up and down on a call-by-call basis. So the H.323 D-channel is actually a TCP/IP signaling channel. Layer 1 and 2 of this signaling channel can be monitored by IP PING testing.

Performance in terms of voice latency for a signaling group is monitored by background measurements being collected by the TN802B Media Processor board.

H.323 B-channels actually use TN802B Media Processor ports to carry the actual bearer. The TN802B is a service circuit. On a call-by-call basis, any port of a TN802B may be serving an H.323 station or a H.323 B-channel. Status information may exist for a specific H.323 B-channel, and an H.323 B-channel may be busied out and released, but no maintenance diagnostic tests will exist for the object.

Errors are logged for *craft* busyout conditions. The system receives service state updates for *craft*-driven busyout/release. Under normal conditions the system automatically places H.323 B-channels into or out of service when it receives an H.323 signaling-group service state update. *Craft* busyout drops active calls.

Error Log Entries and Test to Clear Values

Table 10-313. H323-BCH B-Channel Error Log Entries

Error Type	Aux Data	Associated Test	Alarm Level	On/Off Board	Service State
18	Any	B-channel busied out	Warning	off	*OOS*

Notes:

a. **Error Type 18**: this error indicates that this specific H323 trunk group member has been *craft* busied-out.

System Technician Commands

The following commands are available to the system technician:

- **busyout port UUCSSpp** – on a specific H.323 B-channel, drops any active call that may exist on that B-channel and effectively reduces the trunk group capacity by one. No physical piece of hardware is removed from service.
- **release port UUCSSpp** – on a specific H.323 B-channel, increases the trunk group capacity by one. No physical piece of hardware is actually added to service.
- **status trunk grp/mbr** – use to find the current status of the specific B-channel. Additional status for an H.323 B-channel shows near and far-end IP signaling addresses, near and far-end H.245 addresses, tunneling status, call reference value for an active call and the H.323 conference ID.
- **test port UUCSSpp** – this command results in the message `No tests applicable to this object.`

H323-SGRP (H.323 Signaling Group)

MO Name (in Alarm Log)	Alarm Level	Initial Command to Run[1]	Full Name of MO
H323-SGRP	MINOR	test sig-group *grp#*	H323 Signaling Group
H323-SGRP	WARNING	test sig-group *grp#*	H323 Signaling Group

1 *grp#* is the signaling group number (1-166); the test sequence can be either short or long.

The maintenance object H.323 Signaling Group (H323-SGRP) supports a signaling channel (D-Channel) for H.323 Trunk connections. The MedPro TN802 circuit pack provides audio connectivity, working in concert with a C-LAN (TN799) circuit pack which provides control signaling to support an H.323 connection.

The H.323 signaling group (H323-SGRP) is a signaling channel that physically resides on a C-LAN port (socket) and the IP network. Unlike ISDN D-channels, the H.323 channel may come up and down on a call by call basis. The H.323 channel is a TCP/IP signaling channel. Layers 1 and 2 of this signaling channel are monitored by IP PING testing.

Error Log Entries and Test to Clear Values

Table 10-314. H323-SGRP Signaling Group Error Log Entries

Error Type	Aux Data	Associated Test	Alarm Level	On/Off Board	Test to Clear Value
0[1]	0	Any	Any		test sig-group *grp#*
1 (a)	Any	Ethernet Port Status Test #1386	MINOR	OFF	test sig-group *grp#*
257 (b)	Any	H.323 SGRP PING Test #1387	MINOR	OFF	test sig-group *grp#*
513(c)	Any	H.323 SGRP PING Test #1387	WARNING	OFF	test sig-group *grp#*
770(d)	Any		WARNING	OFF	
1025(e)	Any	MEDPRO Status Test #1392	MINOR	OFF	test sig-group *grp#*
1281(f)	Any	MEDPRO Status Test #1392	MINOR	OFF	
1794(g)		MEDPRO Status Test #1392	MINOR	OFF	test sig-group *grp#*
2049(h)		Keep Alive Failure	MINOR	OFF	test sig-group *grp#*
2305(i)		Gateway Unregistered	MINOR	OFF	test sig-group *grp#*

1 Run the Short Test Sequence first. If all tests pass, run the Long Test Sequence. Refer to the appropriate test description and follow the recommended procedures.

Notes:

a. **Error Type 1** — represents a failure of the CLAN hardware carrying the signaling group D-Channel. Check for errors against the CLAN-BD maintenance object.

b. **Error Type 257** — tracks failures of the H.323 signaling-group PING test. H.323 signaling-group PING test failures are documented later in this maintenance object.

c. **Error Type 513** — tracks excessive round trip delay of the H.323 signaling-group PING test (if the round-trip delay exceeds 4 seconds).

d. **Error Type: 770** — tracks excessive latency and packet-loss from background IP measurements collected by the Media Processor Board.

e. **Error Type 1025** — indicates that the signaling group has been placed into a BYPASS condition because of IP network congestion. The signaling group accepts incoming calls, but all outgoing calls are denied. The system routes these calls over a secondary route, if one has been administered.

f. **Error Type 1281** — implies that no medpro resources are in-service to provide media connections for the trunk members of the signaling group.

g. **Error Type 1794** — The Sig Group reported that the far-end has detected excessive packet latency or loss.

h. **Error Type 2049** — A Keep-Alive timer is set for every registered endpoint on the Remote Office, and the switch expects Keep-Alive update within that timer's time period. If the update does not occur, a message is generated that causes an error to be logged against MO REM-OFF, as well as MO H323-SGRP. Because the signaling group is still known, the error against MO H323-SGRP generates a Minor alarm. This error is only valid if the **change signaling group** form has the `RRQ` field set to `y`. This error counter is only set if a failure has been detected by Call Processing and it notifies maintenance software. The Keep-Alive Error Type 2049 clears only after a registration occurs and Error Type 2305 clears.

i. **Error Type 2305** — indicates that the Gateway (signaling group on the Remote Office) is unregistered. Because the signaling group is still known, the error against MO H323-SGRP generates a Minor alarm when this failure occurs. This error is applicable if the **change signaling group** form has the `RRQ` field set to `y`.

System Technician-Demanded Tests: Descriptions and Error Codes

Always investigate tests in the order presented in the table below when inspecting errors in the system. By clearing error codes associated with the *CLAN Ethernet Status Test (#1386)*, for example, you may also clear errors generated from other tests in the testing sequence.

Order of Investigation	Short Test Sequence	Long Test Sequence	D/ND[1]
CLAN Ethernet Status Test (#1386)	X	X	ND
MedPro Status Test (#1392)	X	X	ND
H.323 Signaling Group Ping Test (#1387)	X	X	ND

1 D = Destructive; ND = Nondestructive

CLAN Ethernet Status Test (#1386)

This test is non-destructive.

This test checks the status of the CLAN ethernet port that originated this signaling group. If the CLAN ethernet port is in-service, the test passes; if it is out of service (OOS), the test fails.

NOTE:
Failure of this test will put the SIG-GRP in the OOS state.

Table 10-315. TEST #1386 CLAN Ethernet Status Test

Error Code	Test Result	Description/Recommendation
1125	ABORT	Ethernet Link is not in service. 1. Check if the ethernet link is in-service or not. If the link is not in service, release the link using **release link n** or the **release port UUCSSpp** command and repeat the test. This is a normal abort. 2. If the test continues to abort after following the repair procedures, escalate the problem.
2000	ABORT	Response to the test was not received from the CLAN TN799 circuit pack within the allowable time period. 1. If this result occurs repeatedly, attempt to reset the circuit pack if the other ports on the board are not in use (Yellow LED is off). Reset the circuit pack by issuing the **busyout board UUCSS**, **reset board UUCSS**, and **release board UUCSS** commands. 2. If this result occurs again, replace the circuit pack.
2100	ABORT	The necessary system resources to execute the test could not be allocated. 1. Retry the command at 1-minute intervals a maximum of 5 times.
2500	ABORT	Internal system error. 1. Retry the command at 1-minute intervals a maximum of 3 times
	FAIL	The CLAN ethernet port corresponding to the near-end address of the SIG-GRP that is OOS has failed. All sessions are down. 1. Execute **test port UUCSSpp long** and verify the result of the H.323 Signaling Group Ping Test (#1387). If the test continues to fail, escalate the problem. If the test passes wait for the sessions to come up.
	PASS	The CLAN ethernet port corresponding to the near-end address of the SIG-GRP that is in-service has passed this test. All sessions on the ethernet link are up.

H.323 Signaling Group Ping Test (#1387)

This test is Nondestructive.

This test is only run for those signaling groups that have an administered far-end IP address. If the H.323 signaling group does not have an administered far-end IP address, the test will abort.

The test determines the local CLAN through which the signaling originates, and the far-end terminating IP address. It then requests the local CLAN to execute a PING on the far-end address. If the PING is successful, the test passes; if the ping is not successful, the test fails.

NOTE:
Multiple failures of this test can take the H.323 signaling group out of service.

If the PING is successful, this test looks at the PING round trip delay. If a round trip delay of greater than 4 seconds is reported, a separate error is logged. Excessive round trip delays within the signaling group will not take the signaling group out of service, however.

Services can execute the standard PING command using the CLAN board address and far-end IP address from the signaling group form to see the actual round-trip delay.

This test checks the circuitry involved in the data path of a peer-to-peer IP layer connection.

This test is a nondestructive test. It runs because of in-line errors, during periodic and scheduled maintenance, and on-demand.

Table 10-316. TEST #1387 H.323 Signaling Group Ping Test

Error Code	Test Result	Description/Recommendation
1, 2	ABORT	Internal Error. 1. Retry the command at 1-minute intervals a maximum of 3 times.
7	ABORT	Destination unreachable. 1. Verify that the CLAN has been administered with an IP-Route that enables the CLAN to reach the FAR-END IP address 2. Once verified, execute **test sig-group grp#** command to verify that the H.323 Signaling Group Ping Test (#1387) passes.
1005	ABORT	Configuration for this test is incorrect. 1. Verity that the link is in-service with the **status port** or **status link** command. Verify that the routing table has destinations that are reachable through this port. 2. Repeat the test. 3. If the test aborts with Error Code 7, while step 1 verified, escalate the problem.
1125	ABORT	Link is not in service. 1. Check if the link is in-service or not. If the link is not in service, release the link using **release link** or **release port** command and repeat the test. This is a normal abort. 2. If the test continues to abort after following the repair procedures, escalate the problem.
2000	ABORT	Response to the test was not received from the CLAN circuit pack within the allowable time period. 1. If this result occurs repeatedly, attempt to reset the circuit pack if the other ports on the board are not in use (Yellow LED is off). Reset the circuit pack by issuing the **busyout board UUCSS**, **reset board UUCSS**, and **release board UUCSS** commands. 2. If this result occurs again, replace the circuit pack.
2012	ABORT	Internal system error. 1. Retry the command at 1-minute intervals a maximum of 3 times.

Continued on next page

Table 10-316. TEST #1387 H.323 Signaling Group Ping Test — *Continued*

Error Code	Test Result	Description/Recommendation
2100	ABORT	The necessary system resources to execute the test could not be allocated. 1. Retry the command at 1-minute intervals a maximum of 5 times.
2500	ABORT	Internal system error. 1. Retry the command at 1-minute intervals a maximum of 3times.
2800	ABORT	No CLAN in the same region. 1. Verify translations and retest.
2801	ABORT	No IP address defined. 1. Verify translations and retest.
2802	ABORT	Different IP address pinged than software had allocated for the test. 1. Retry the command at 1-minute intervals a maximum of 3 times.
7, 89, 1007	FAIL	PING to the destination failed through this port because the destination was down. 1. Verify that at least one destination reachable through this port is “up”. Once verified, execute **test sig-group grp#** command to verify that the H.323 Signaling Group Ping Test (#1387) passes.
	PASS	PING through this port was successful.

MedPro Status Test (#1392)

This test is non-destructive.

This test determines if at least one media processor port exists that is in service, and that serves the same region as the CLAN that the signaling group uses. If at least one exists and is in-service, the test passes; otherwise, the test fails.

Table 10-317. TEST #1392 MedPro Status Test

Error Code	Test Result	Description/Recommendation
2100	ABORT	The necessary system resources to execute the test could not be allocated. 1. Retry the command at 1-minute intervals a maximum of 5 times.
2500	ABORT	Internal system Error. 1. Retry the command at 1-minute intervals a maximum of 3 times
	FAIL	No MEDPRO ports in this region are in-service. All sessions are down. 1. Execute **test sig-group grp#** and verify the result of the H.323 Signaling Group Ping Test (#1387). If the test continues to fail, escalate the problem. If the test passes, wait for the sessions to come up.
	PASS	All sessions on the ethernet link are up.

H323-STN (H.323 IP Station)

MO Name (in Alarm Log)	Alarm Level	Initial Command to Run	Full Name of MO
H323-STN	WARNING	test station *extension*	H.323 IP Station

This maintenance object covers implementation of the maintenance for native mode H.323 endpoints. Native mode H.323 applications such as NetMeeting or Proshare only provide what is needed to support the H.323 standard. There is very little that DEFINITY can invoke in the maintenance area. DEFINITY will report errors as they are detected via the RAS registration and keep-alive mechanism. DEFINITY will PING the endpoint both via the signaling path (i.e. via C-LAN) and via the media path (i.e. via Medpro).

This station type is not attached to a port board. Insertion of the station is not driven by board insertion, rather it is driven by successful registration of the endpoint. It is maintained via a set of explicit TCP/IP ping requests and errors reported by the switch software, which terminates the H.323 signaling portion of each endpoint. The MO follows standard maintenance methodology and supports test, busyout, release and status commands.

Error Log Entries and Test to Clear Values

Table 10-318. H323-STN IP Station Error Log Entries

Error Type	Aux Data	Associated Test	Alarm Level	On/Off Board	Test to Clear Value
0	0	Any	Any		test station *extension*
1 (a)		Registration Status Inquiry Test (#1372)	WARNING	OFF	
257 (b)		Signaling Path PING Test (#1373)	WARNING	OFF	
513(c)		Media Path PING Test (#1374)	WARNING	OFF	

Notes:

a. **Error Type 1**: this error reports the registration status of the endpoint. If call processing SW claims the endpoint is registered and receives keep-alive handshakes from the endpoint, the test passes. If keep-alive handshaking has failed, the test fails. If the user has intentionally un-registered from DEFINITY, the station is now basically an AWOH station and is no longer being maintained; no tests will run for this station.

b. **Error Type 257**: this error tracks failures of the signaling path PING test. The test attempts to send a PING packet to the endpoint IP address, as reported during registration. The PING packet originates with the C-LAN board through which the endpoint is registered. If the PING response packet is received, the test passes. If the PING response packet times out, the test fails.

c. **Error Type 513**: this error tracks failures with the media path PING test. The test attempts to send a PING packet to the endpoint IP address, as reported during registration. The PING packet originates with a Media Processor board. Any Media Processor board may be used as long as it is administered to be in the same network region as the C-LAN board through which the endpoint is registered. If the PING response is received, the test passes. If the PING response packet times out, the test fails.

System Technician-Demanded Tests: Descriptions and Error Codes

Always investigate tests in the order presented in the table below when inspecting errors in the system. By clearing error codes associated with the Signaling Path PING Test (#1373), for example, you may also clear errors generated from other tests in the testing sequence.

Order of Investigation	Short Test Sequence	Long Test Sequence	D/ND[1]
Registration Status Inquiry Test (#1372)	X	X	ND
Signaling Path PING Test (#1373)	X	X	ND
Media Path PING Test (#1374)	X	X	ND

1 D = Destructive; ND = Nondestructive

Registration Status Inquiry Test (#1372)

The Registration status inquiry reports the H.323 registration status of the endpoint. An endpoint must be registered and authenticated in order to receive service from the system.

Registration is initiated when the endpoint user attempts to login using the registration software application running on the endpoint PC. The user must provide a valid extension and security code. The registration messages are sent to the IP address of a C-LAN ethernet port.

A registered extension has a port type SNNNNN, where N is a digit from 0-9. A non-registered extension has an X port.

Table 10-319. TEST #1372 Registration Status Inquiry

Error Code	Test Result	Description/Recommendation
1,2,3	FAIL	The endpoint is not successfully registered. 1. Verify that the user is entering: ■ the correct extension and security code ■ the C-LAN IP address 2. Verify that the extension has been enabled for IP Softphone operation. 3. If many endpoints cannot register, investigate any errors of the C-LAN ethernet port. 4. Examine the ethernet cabling from the endpoint PC to the ethernet hub.
	PASS	The endpoint is successfully registered and continues to respond to registration handshaking.

Signaling Path PING Test (#1373)

This test is nondestructive.

The test determines the local C-LAN through which the signaling originates and the endpoint's IP address. It then requests the local C-LAN to execute a PING on the endpoint's address. If the PING is successful, the test passes, if the PING is not successful, the test fails.

NOTE:
Multiple failures of this test can take the H.323 IP Station out of service.

This test checks the circuitry involved in the data path of a peer-to-peer IP layer connection.

This nondestructive test runs due to in-line errors, during periodic and schedule maintenance, and on demand.

Table 10-320. TEST #1373 Signaling Path PING Test

Error Code	Test Result	Description/Recommendation
2100	ABORT	Could not locate the necessary system resources to run this test. 1. Retry the command at 1-minute intervals, up to 5 times. 2. Escalate if the problem persists.
2500	ABORT	Internal system error. 1. Retry the command at 1-minute intervals, up to 3 times. 2. Escalate if the problem persists.
1003	FAIL	Ping to the destination failed. 1. Retry the command at 1-minute intervals, up to 3 times. 2. Investigate any C-LAN ethernet port errors.
1007	FAIL	The system could not PING the registered endpoint via the C-LAN. 1. Verify that at least one destination reachable through this port. PING this destination (**ping ip-address *xxx.xxx.xxx.xxx***). 2. If the PING to any destination is successful through this port, the link is up. 3. If PING to all destinations fail, test the C-LAN port (**test port UUCSSpp short**) and follow repair procedures for Session Status Test (#1286) failures. 4. If only this station cannot be pinged: ■ Make sure the PC is up ■ Make sure the PC has a network connection (ethernet or dialup) ■ Check the ethernet cabling
	PASS	The system can successfully send IP packets to the registered endpoint from the C-LAN.

Media Path PING Test (#1374)

This test is nondestructive.

The test selects a Media Processor board. It then requests the local Media Processor to execute a PING on the endpoint address. If the PING is successful, the test passes, if the PING is not successful, the test fails.

Services can execute the standard **ping** command using the Media Processor board address and endpoint IP address to see the actual round-trip delay.

This test checks the IP network connectivity needed for audio packets to be sent to the endpoint.

This nondestructive test runs due to in-line errors, during periodic and schedule maintenance, and on demand.

Table 10-321. TEST #1374 Media Path PING Test

Error Code	Test Result	Description/Recommendation
2100	ABORT	Could not locate the necessary system resources to run this test. 1. Retry the command at 1-minute intervals, up to 5 times. 2. Escalate if the problem persists.
2500	ABORT	Internal system error. 1. Retry the command at 1-minute intervals, up to 3 times. 2. Escalate if the problem persists.
2806	ABORT	No Media Processor board found to use for this test.
ANY	FAIL	The system could not PING the registered endpoint from a Media Processor board. This may result in calls with no talk path. 1. If the Registration Status Inquiry Test (#1372) fails, follow those procedures. 2. Refer to MEDPRO, Test #1378, for a detailed description of the error codes.
	PASS	PING through this Media Processor is successful.

HYB-BD (Hybrid Line Circuit Pack)

MO Name (in Alarm Log)	Alarm Level	Initial Command to Run[1]	Full Name of MO
HYB-BD	MIN	test board PCSS sh	Hybrid Line Circuit Pack
HYB-BD	WRN	test board PCSS sh	Hybrid Line Circuit Pack

1 Where P is the port network number (1 for PPN and 2 or 3 for EPN); C is the carrier designation (for example, A, B, C, D, or E); and SS is the address of the slot in the carrier where the circuit pack is located (for example, 01, 02, etc.).

Refer to XXX-BD (Common Port Circuit Pack) Maintenance documentation for circuit pack level errors. See also HYB-LINE (Hybrid Line) Maintenance documentation for related line information.

HYB-LINE (Hybrid Line)

MO Name (in Alarm Log)	Alarm Level	Initial Command to Run[1]	Full Name of MO
HYB-LINE	Minor	test port PCSSpp l	Hybrid Line
HYB-LINE	Warning	test port PCSSpp l	Hybrid Line

1 Where P is the port network number (1 for PPN and 2 or 3 for EPN); C is the carrier designation (for example, A, B, C, D, or E); SS is the address of the slot in the carrier where the circuit pack is located (for example, 01, 02, etc.); and pp is the 2-digit port number (for example, 01).

Hybrid Line is the user-friendly name for Hybrid Line, which was previously used to denote the Multifunction Analog Telephone. The Hybrid Line set is also known as an SCS (Small Communications System).

The TN762B Hybrid Line circuit pack supports eight of these multifunction analog telephone sets, as shown in the following figure. The Hybrid Line sets use three pairs of wires: an analog voice pair, a transmit/receive pair, and a power pair.

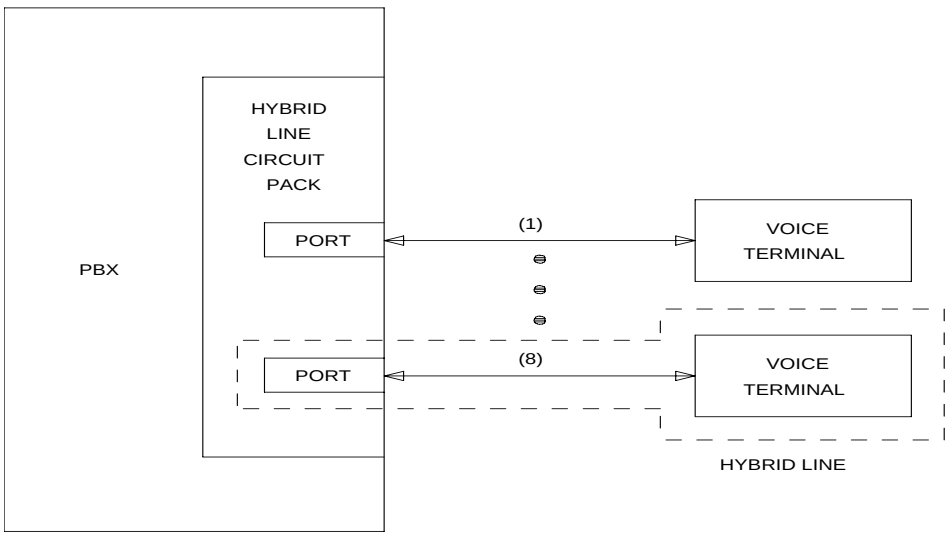

Figure 10-33. Hybrid Station Interactions

This section refers only to the HYB-LINE (Hybrid Line) maintenance that is performed. Please note that the HYB-LINE (Hybrid Line) maintenance is closely related to, and interacts with, the HYB-BD (Hybrid Line circuit pack) maintenance in some instances. Some of the results of maintenance testing of the Hybrid Line may be affected by the health of the Hybrid Line circuit pack. This interaction should be kept in mind when investigating the cause of reported Hybrid Line problems.

There are instances in this section where “service states” of a station are mentioned. It is helpful to understand what is meant by the different service states that may exist. An explanation of these service states follows:

- Out-of-Service–The port, and thus the station, have been removed from service. A busyout of a port causes it to be out-of-service.
- Ready-for-Service–Once a port on the circuit pack has been put into service, the voice terminal must communicate that it is present. The time between these two events is the time when the terminal is in the ready-for-service state.
- In-Service–Once the system has received a message from the voice terminal communicating that it is present, the station is put into the in-service state. The terminal can also be forced into the in-service state if it goes off-hook while it is in the ready-for-service state.

When the **status station** command has been run, and the status screen appears, the status is reported as either out-of-service or in-service, which mean exactly as stated in the above list, or disconnect, which means the station is in the ready-for-service state.

Hardware Error Log Entries and Test to Clear Values

Table 10-322. Hybrid Line Error Log Entries

Error Type	Aux Data	Associated Test	Alarm Level	On/Off Board	Test to Clear Value
0[1]	0	Any	Any	Any	test port PCSSpp sh r 1
1 (a)	Any	None	WARNING	OFF	
15 (b)	Any	Hybrid Audits Test (#61)			
18 (c)	0	busyout port PCSSpp	WARNING	OFF	release port PCSSpp
130 (d)		None	WARNING	ON	test port PCSSpp sh
257 (e)	40988	None	MIN/WRN[2]	OFF	
513 (f)	40965	Hybrid Line Audits Test (#61)	WARNING	OFF	test port PCSSpp sh r 4
769 (g)		Remote Dig Loop Around Test (#59)	WARNING	OFF	test port PCSSpp sh r 3
1025		Hybrid & Conf. Circuits Test (#57)	MIN/WRN[2]	ON	test port PCSSpp l r 3
1281 (h)		Local Digital Loop Around Test (#58)	WARNING	ON	test port PCSSpp l r 3
1537 (i)	40968	None	WARNING	OFF	
1793		TDMNPE Crosstalk Test (#6)	MIN/WRN[2]	ON	test port PCSSpp l r 3
2049 (j)	32770	None			
2049 (k)	40967	None			

1 Run the Short Test Sequence first. If all tests pass, run the Long Test Sequence. Refer to the appropriate test description and follow the recommended procedures.

2 Major or Minor alarms on this MO may be downgraded to Warning alarms based on the values used in the **set options** command.

Notes:

a. Indicates a defective data link. An off-board problem was detected by port circuit. Verify that the Hybrid set is connected and that the EPF test passes. If data transmission problems are experienced, check for defective wiring or a defective voice terminal, or move terminal closer to the switch (in terms of feet of wire from the jack to the switch). If the problem still exists, replace the circuit pack. Once the problem has been resolved, the alarm is retired after a predetermined period of time.

b. This is a software audit error that does not indicate any hardware malfunction. Run Short Test Sequence and investigate associated errors (if any).

c. This error type is logged when the port in question is busied out by maintenance personnel. Make sure port is released from busyout via **release port PCSSpp**.

d. This error type indicates that the circuit pack has been removed or has been insane for more than 11 minutes. To clear the error, reinsert or replace the circuit pack.

e. This indicates that the EPF has been turned off due to an overcurrent condition at the voice terminal. Check for defective wiring or a damaged jack, and make sure the voice terminal is a Hybrid set. Once the problem has been resolved, the alarm is retired after a predetermined period of time.

f. This indicates that the voice terminal has probably been disconnected or that there is a problem in the wiring to the terminal. Make sure that the voice terminal is connected or check for defective wiring to the voice terminal.

g. Note that Error Types 769 and 1281 by themselves create Warning alarms only, but if both are present, a Minor alarm is logged.

h. This indicates that there is something wrong with the data link to the voice terminal. An in-line maintenance error has generated an off-board warning. Ignore it if there are no complaints. Otherwise, make sure the voice terminal is connected, check for defective wiring, check for a defective voice terminal, and move voice terminal closer to the switch (in terms of feet of wire from the jack to the switch). If the problem still exists, replace the circuit pack.

i. This indicates that the station went off-hook while in the disconnect state. Use **status station** to determine the state of the station. The off-hook should have moved the station to in-service. No system technician action is necessary.

j. This is the code that is generated when the link between the circuit pack and the voice terminal is successfully reset. No system technician action is necessary.

System Technician-Demanded Tests: Descriptions and Error Codes

Always investigate tests in the order presented in the table below when inspecting errors in the system. By clearing error codes associated with the *Local Digital Loop Around Test*, for example, you may also clear errors generated from other tests in the testing sequence.

Table 10-323. System Technician-Demanded Tests: HYB-LINE

Order of Investigation	Short Test Sequence	Long Test Sequence	D/ND[1]
Local Digital Loop Around Test (#58)		X	ND
NPE Crosstalk Test (#6)		X	ND
Hybrid Electronic Power Feed Test (#56)		X	ND
Hybrid Circuit and Conference Circuit Test (#57)		X	ND
Remote Digital Loop Around Test (#59)	X	X	ND
Station Lamp Update Test (#60)	X	X	ND
Station Audits Test (#61)	X	X	ND
Ringer Update Test (#62)	X	X	ND

1 D = Destructive, ND = Non-destructive

NPE Crosstalk Test (#6)

One or more NPEs reside on each circuit pack with a TDM Bus interface. The NPE controls port connectivity and gain, and provides conferencing functions on a per port basis. The NPE Crosstalk Test verifies that this port's NPE channel talks on the selected time slot and never crosses over to time slots reserved for other connections. If the NPE is not working correctly, one-way and noisy connections may be observed. This test is part of a port's Long Test Sequence and takes about 20 to 30 seconds to complete.

Table 10-324. TEST #6 NPE Crosstalk Test

Error Code	Test Result	Description/Recommendation
	ABORT	Could not allocate the necessary system resources to run this test. 1. Retry the command at one-minute intervals a maximum of 5 times.
1000	ABORT	System resources required to run this test are not available. The port may be busy with a valid call. Use the **display port PCSSpp** command to determine the station extension number of the port. Use the **status station** command to determine the service state of the port. If the service state indicates that the port is in use, then the port is unavailable for certain tests. (Refer to the “Status Commands” section in Chapter 10, “Maintenance Commands and Trouble-Clearing Aids” for a full description of all possible states.) You must wait until the port is idle before retesting. Attendants are always in use (off-hook) if the handset is plugged in and the port is not busied out. 1. If the port status is idle, then retry the command at one-minute intervals a maximum of 5 times.
1001	ABORT	Could not allocate the necessary system resources to run this test. This could be due to a failure to seize the port. 1. Retry the command at 1-minute intervals a maximum of 5 times.
1002	ABORT	The system could not allocate time slots for the test. The system may be under heavy traffic conditions or it may have time slots out-of-service due to TDM-BUS errors. Refer to TDM-BUS (TDM Bus) Maintenance documentation to diagnose any active TDM-BUS errors. 1. If system has no TDM-BUS errors and is not handling heavy traffic, repeat test at one-minute intervals a maximum of 5 times.
1003	ABORT	The system could not allocate a tone receiver for the test. The system may be oversized for the number of Tone Detectors present or some Tone Detectors may be out-of-service. 1. Look for TTR-LEV errors in the Error Log. If present, refer to TTR-LEV (TTR Level) Maintenance documentation. 2. Look for TONE-PT errors in the Error Log. If present, refer to TONE-PT (Tone Generator) Maintenance documentation. 3. If neither condition exists, retry the test at one-minute intervals a maximum of 5 times.

Continued on next page

Table 10-324. TEST #6 NPE Crosstalk Test — *Continued*

Error Code	Test Result	Description/Recommendation
1004	ABORT	The port was seized by a valid call during the test. The test has been aborted. Use **display port PCSSpp** to determine the station extension number of the port. Use **status station** to determine the service state of the port. If the service state indicates that the port is in use, then the port is unavailable for certain tests. (Refer to the “Status Commands” section in Chapter 10, “Maintenance Commands and Trouble-Clearing Aids” for a full description of all possible states.) You must wait until the port is idle before retesting. Attendants are always in use (off-hook) if the handset is plugged in and the port is not busied out. 1. Retry the command at one-minute intervals a maximum of 5 times. 2. If the test continues to abort and the port is not in use, escalate the problem.
1018	ABORT	Test disabled via administration. This only applies to analog stations. The default for this field is ‘y,’ so you may want to determine why it has been turned off for this station. 1. To enable test, set the Test field on the station administration screen for the particular analog station being tested to ‘y.’ Use **change station <extension>**.
2000	ABORT	Response to the test request was not received within the allowable time period. 1. Retry the command at one-minute intervals a maximum of 5 times.
2020	ABORT	The test did not run due to an already existing error on the specific port or a more general circuit pack error. 1. Examine Error Log for existing errors against this port or the circuit pack and attempt to diagnose the already existing error.
2100	ABORT	Could not allocate the necessary system resources to run this test. This could be due to a failure to seize the port. 1. Retry the command at 1-minute intervals a maximum of 5 times.

Continued on next page

Table 10-324. TEST #6 NPE Crosstalk Test — *Continued*

Error Code	Test Result	Description/Recommendation
Any	FAIL	This test can fail due to on-board or off-board problems. Off-board problems of concern include EXP-INTF faults, TDM-BUS faults, and faults associated with the tone detectors/tone generators. Clear all off-board problems before replacing the board. Keep in mind that a TDM-BUS problem is usually the result of a faulty board connected to the backplane or bent pins on the backplane. 1. Look for EXP-INTF errors in the error log. If present, refer to the EXP-INTF Maintenance documentation. 2. Look for TDM-BUS errors in the error log. If present, refer to the TDM-BUS Maintenance documentation. 3. Retest the board when the faults from steps 1 and 2 are cleared.
	PASS	The port is correctly using its allocated time slots. User-reported troubles on this port should be investigated using other port tests and examining station, trunk, or external wiring.
0	NO BOARD	The test could not relate the internal ID to the port (no board). This could be due to incorrect translations, no board is inserted, an incorrect board is inserted, or an insane board is inserted. 1. Check to ensure that the board translations are correct. Use **list config**, and resolve any problems that are found. 2. If the board was found to be correctly inserted in step 1, issue **busyout board**. 3. Issue the **reset board** command. 4. Issue the **release busy board** command. 5. Issue **test board long**. This should re-establish the linkage between the internal ID and the port. If this is not the case, dispatch to check to ensure that there is a valid board inserted.

Hybrid Electronic Power Feed Test (#56)

In this test, the software requests that the EPF be turned on for a given port. An attempt is made to turn on the power unit from the station. If no current is being drawn, this probably indicates that the station is not connected. If an overcurrent condition is sensed (that is, too much current is being drawn), this may indicate a short in the loop or a defective voice terminal. Depending on what condition is sensed, a message is returned stating that either the EPF was turned on successfully with no problems or that an overcurrent condition is sensed. This test is repeated once more five seconds later. If either test is not successful, the test aborts (see first ABORT entry in the table below).

Table 10-325. TEST #56 Hybrid Electronic Power Feed Test

Error Code	Test Result	Description/Recommendation
	ABORT	Internal System Error. 1. Retry the command at one-minute intervals a maximum of 5 times.
1000	ABORT	System resources required to run this test are not available. The port may be busy with a valid call. Use **display port PCSSpp** to determine the station extension number of the port. Use **status station** to determine the service state of the port. If the service state indicates that the port is in use, then the port is unavailable for certain tests. (Refer to the “Status Commands” section in Chapter 10, “Maintenance Commands and Trouble-Clearing Aids” for a full description of all possible states.) You must wait until the port is idle before retesting. Attendants are always in use (off-hook) if the handset is plugged in and the port is not busied out. 1. If the port status is idle, then retry the command at one-minute intervals a maximum of 5 times.
	FAIL	Internal System Error. 1. Retry the command at one-minute intervals a maximum of 5 times.

Continued on next page

Table 10-325. TEST #56 Hybrid Electronic Power Feed Test — *Continued*

Error Code	Test Result	Description/Recommendation
	PASS	EPF test passed. The message to turn on the power to the station was successfully sent to the port. 1. Although this test never returns a FAIL result, after running this test, the Error Log should be checked for any entries with Error Type 257 to examine the real results of this test. 2. If Error Type 257 does not appear in the Error Log within 10 seconds after completion of this test, it is safe to assume that the test sensed no problems with the power to the station. To verify that the station is powered up correctly, run a self-test on the station, if available, and check that all the feature buttons are operating. 3. If Error Type 257 appears in the Error Log, this indicates some problem with the power to the station. The system technician should check for a short in the wiring, a damaged jack, a defective voice terminal, or an incorrect type of terminal.
0	NO BOARD	The test could not relate the internal ID to the port (no board). This could be due to incorrect translations, no board is inserted, an incorrect board is inserted, or an insane board is inserted. 1. Check to ensure that the board translations are correct. Use **list config**, and resolve any problems that are found. 2. If the board was found to be correctly inserted in step 1, issue the **busyout board** command. 3. Issue the **reset board** command. 4. Issue the **release busy board** command. 5. Issue **test board long**. This should re-establish the linkage between the internal ID and the port. If this is not the case, dispatch to check to ensure that there is a valid board inserted.

Hybrid Circuit and Conference Circuit Test (#57)

This test checks the amount of reflection from the Hybrid loop around circuitry and a Conference Test. Please be aware that if no station is connected to the port being tested, the results of the test are not valid. The Tone-Clock circuit pack places a 1004-Hz tone on a time slot that the port circuit is listening on. A GPTD is connected to another time slot that the same port circuit is talking on. The on-board microprocessor places the port in the loop around mode and the GPTD measures the level of the reflected signal.

The Conference Test is performed after the Circuit Test. The Conference Circuit Test verifies that the NPE is able to listen to several test tones and correctly conference them together. The test is executed in two parts. The first half of the test checks the operation of the NPE's first three conference channels. The NPE is put in the loop around mode and instructed to talk on a selected time slot and listen to the 1004-Hz tone using the first three Conference Channels. The signal level and noise level of the conferenced output are then measured using a GPTD and checked to verify that they are within an acceptable range.

The second half of the Conference Test checks the operation of the NPE's remaining four Conference Channels and follows the same procedure as the preceding paragraph.

Table 10-326. TEST #57 Hybrid Circuit and Conference Circuit Test

Error Code	Test Result	Description/Recommendation
	ABORT	Could not allocate the necessary system resources to run this test. 1. Retry the command at one-minute intervals a maximum of 5 times.
1000	ABORT	System resources required to run this test are not available. The port may be busy with a valid call. Use **display port PCSSpp** to determine the station extension number of the port. Use **status station** to determine the service state of the port. If the service state indicates that the port is in use, then the port is unavailable for certain tests. (Refer to the "Status Commands" section in Chapter 10, "Maintenance Commands and Trouble-Clearing Aids" for a full description of all possible states.) You must wait until the port is idle before retesting. Attendants are always in use (off-hook) if the handset is plugged in and the port is not busied out. 1. If the port status is idle, then retry the command at one-minute intervals a maximum of 5 times.

Continued on next page

Table 10-326. TEST #57 Hybrid Circuit and Conference Circuit Test — *Continued*

Error Code	Test Result	Description/Recommendation
1001	ABORT	Could not allocate the necessary system resources to run this test. This could be due to a failure to seize the port. 1. Retry the command at 1-minute intervals a maximum of 5 times.
1002	ABORT	The system could not allocate time slots for the test. The system may be under heavy traffic conditions or it may have time slots out-of-service due to TDM-BUS errors. Refer to TDM-BUS (TDM Bus) Maintenance documentation to diagnose any active TDM-BUS errors. 1. If the system has no TDM-BUS errors and is not handling heavy traffic, repeat test at one-minute intervals a maximum of 5 times.
1003	ABORT	The system could not allocate a tone receiver for the test. The system may be oversized for the number of Tone Detectors present or some Tone Detectors may be out-of-service. 1. Look for TTR-LEV errors in the Error Log. If present, refer to TTR-LEV (TTR Level) Maintenance documentation. 2. Look for TONE-PT errors in the Error Log. If present, refer to TONE-PT (Tone Generator) Maintenance documentation. 3. If neither condition exists, retry the test at one-minute intervals a maximum of 5 times.
1004	ABORT	The port was seized by a valid call during the test. The test has been aborted. Use **display port PCSSpp** to determine the station extension number of the port. Use **status station** to determine the service state of the port. If the service state indicates that the port is in use, then the port is unavailable for certain tests. (Refer to the “Status Commands” section in Chapter 10, “Maintenance Commands and Trouble-Clearing Aids” for a full description of all possible states.) You must wait until the port is idle before retesting. Attendants are always in use (off-hook) if the handset is plugged in and the port is not busied out. 1. Retry the command at one-minute intervals a maximum of 5 times. 2. If the test continues to abort and the port is not in use, escalate the problem.
2000	ABORT	Response to the test request was not received within the allowable time period. 1. Retry the command at one-minute intervals a maximum of 5 times.

Continued on next page

Table 10-326. TEST #57 Hybrid Circuit and Conference Circuit Test — *Continued*

Error Code	Test Result	Description/Recommendation
7	FAIL	Conference Test failed. User may be able to use conference circuit without difficulty in some cases. In other extreme cases, conference calling will be totally restricted. The failure may be due to off-board circumstances, the most common of which is an off-hook occurring during the test. Also, check the error logs against the GPTD-BD, the TONE-BD, and the TONE-PT. 1. This error can be caused by a disconnected terminal. First, ensure that the terminal is connected and the wiring is OK. 2. Then, issue **display port** and **status station** to determine if the station is idle. If it is idle, issue **test port** for this port. 3. If test continues to fail, issue **busyout port** and **release port**, and then retest the port. 4. It is possible that the port may still be functional from a user's point of view.

Continued on next page

Table 10-326. TEST #57 Hybrid Circuit and Conference Circuit Test — *Continued*

Error Code	Test Result	Description/Recommendation
57	FAIL	Hybrid Circuit Test failed. This could result in noisy or bad connections. 1. This error can be caused by a disconnected terminal. First, ensure that the terminal is connected and the wiring is OK. 2. Run circuit pack tests to check the Tone Generator circuit pack and the Tone Detector circuit pack using **test board PCSS short**. 3. Resolve any problems that are detected on the Tone Generator circuit pack or Tone Detector circuit pack. 4. If the Tone Generator and Tone Detector circuit packs are functioning properly, and the test still fails, replace the Hybrid Line circuit pack. **NOTE:** If the Hybrid Circuit and Conference Circuit Test fails for all ports on a circuit pack, a -5 volt power problem is indicated. If a TN736 or TN752 power unit circuit pack is present, the 631DB AC power unit may be defective. (The 631DB power unit is used in a medium cabinet powered by an AC source. The 645B power unit is used in a medium cabinet powered by a DC power source.) The system may contain either a TN736 or a TN752 power unit circuit pack OR a 631DB AC power unit, *but not both types of power units.* To investigate problems with a 631DB AC power unit, refer to CARR-POW (Carrier Port Power Unit for AC-Powered Systems) Maintenance documentation. To investigate problems with a 645B DC power unit, refer to CARR-POW (Carrier Port Power Unit for DC-Powered Systems) Maintenance documentation.

Continued on next page

Table 10-326. TEST #57 Hybrid Circuit and Conference Circuit Test — *Continued*

Error Code	Test Result	Description/Recommendation
	PASS	Hybrid Circuit and Conference Circuit Test passed. The hybrid circuitry is transmitting properly. 1. If complaints still exist, investigate by using other port tests, and by examining the station, wiring, and connections.
0	NO BOARD	The test could not relate the internal ID to the port (no board). This could be due to incorrect translations, no board is inserted, an incorrect board is inserted, or an insane board is inserted. 1. Check to ensure that the board translations are correct. Use the **list config** command, and resolve any problems that are found. 2. If the board was found to be correctly inserted in step 1, issue **busyout board**. 3. Issue the **reset board** command. 4. Issue the **release busy board** command. 5. Issue **test board long**. This should re-establish the linkage between the internal ID and the port. If this is not the case, dispatch to check to ensure that there is a valid board inserted.

Hybrid Line Local Digital Loop Around Test (#58)

This test checks the control channel between the SPE and the port's digital circuitry. The SPE sends transparent data to the on-board microprocessor and compares the data echoed back. This test is repeated three times.

Table 10-327. TEST #58 Hybrid Line Local Digital Loop Around Test

Error Code	Test Result	Description/Recommendation
	ABORT	Internal System Error. 1. Retry the command at one-minute intervals a maximum of 5 times.
1000	ABORT	System resources required to run this test are not available. The port may be busy with a valid call. Use **display port PCSSpp** to determine the station extension number of the port. Use **status station** to determine the service state of the port. If the service state indicates that the port is in use, then the port is unavailable for certain tests. (Refer to the "Status Commands" section in Chapter 10, "Maintenance Commands and Trouble-Clearing Aids" for a full description of all possible states.) You must wait until the port is idle before retesting. Attendants are always in use (off-hook) if the handset is plugged in and the port is not busied out. 1. If the port status is idle, then retry the command at one-minute intervals a maximum of 5 times.
1004	ABORT	The port was seized by a valid call during the test. The test has been aborted. Use **display port PCSSpp** to determine the station extension number of the port. Use **status station** to determine the service state of the port. If the service state indicates that the port is in use, then the port is unavailable for certain tests. (Refer to the "Status Commands" section in Chapter 10, "Maintenance Commands and Trouble-Clearing Aids" for a full description of all possible states.) You must wait until the port is idle before retesting. Attendants are always in use (off-hook) if the handset is plugged in and the port is not busied out. 1. Retry the command at one-minute intervals a maximum of 5 times. 2. If the test continues to abort and the port is not in use, escalate the problem.
2000	ABORT	Response to the test request was not received within the allowable time period. 1. Retry the command at one-minute intervals a maximum of 5 times.

Continued on next page

Table 10-327. TEST #58 Hybrid Line Local Digital Loop Around Test — *Continued*

Error Code	Test Result	Description/Recommendation
1,2,3	FAIL	The control channel between the processor and the port is not transmitting properly. This port is not operable. 1. Retry the test. 2. If the failure still occurs, issue **busyout** and **release busy**, and then retest. 3. If the failure is occurring on more than one port on the board, suspect the board. 4. If the failure is occurring on several boards in the same carrier, escalate the problem. 5. If the failure still occurs and appears to be isolated to one port, check all wiring to the set and all set connections. 6. Replace the circuit pack as a last resort.
	PASS	Hybrid Line Local Digital Loop Around Test passed. The control channel is transmitting properly. 1. If complaints still exist, investigate by using other circuit pack tests, and by examining the station, wiring, and connections.
0	NO BOARD	The test could not relate the internal ID to the port (no board). This could be due to incorrect translations, no board is inserted, an incorrect board is inserted, or an insane board is inserted. 1. Check to ensure that the board translations are correct. Use **list config**, and resolve any problems that are found. 2. If the board was found to be correctly inserted in step 1, issue **busyout board**. 3. Issue the **reset board** command. 4. Issue the **release busy board** command. 5. Issue the **test board long** command. This should re-establish the linkage between the internal ID and the port. If this is not the case, dispatch to check to ensure that there is a valid board inserted.

Hybrid Line Remote Digital Loop Around Test (#59)

This test checks the digital control pair from the port circuit to the terminal. The on-board microprocessor sends a message to the terminal and checks for a proper return message. This test is repeated three times, with two out of the three attempts passing being sufficient for this test to pass. [G1] This test will run if the station is in-service or out-of-service.

Table 10-328. TEST #59 Hybrid Line Remote Digital Loop Around Test

Error Code	Test Result	Description/Recommendation
	ABORT	Internal System Error. 1. Retry the command at 1-minute intervals for a maximum of 5 times.
1	ABORT	A request for a remote station audit aborted even though all internal resources were correctly allocated. 1. Look in the error log for error type 18 (port busied out) for this port. If this error type is present, release the port via **release port PCSSpp** or **release station extension**, and then run the test again. 2. Make sure that the terminal is connected. 3. Retry the command at 1-minute intervals for a maximum of 5 times.
1000	ABORT	System resources required to run this test are not available. The port may be busy with a valid call. Use **display port PCSSpp** to determine the station extension number of the port. Use **status station** to determine the service state of the port. If the service state indicates that the port is in use, then the port is unavailable for certain tests. (Refer to the “Status Commands” section in Chapter 10, “Maintenance Commands and Trouble-Clearing Aids” for a full description of all possible states.) You must wait until the port is idle before retesting. Attendants are always in use (off-hook) if the handset is plugged in and the port is not busied out. 1. If the port status is idle, then retry the command at one-minute intervals a maximum of 5 times.
2000	ABORT	Response to the test request was not received within the allowable time period. 1. Retry the command at one-minute intervals a maximum of 5 times.

Continued on next page

Table 10-328. TEST #59 Hybrid Line Remote Digital Loop Around Test — *Continued*

Error Code	Test Result	Description/Recommendation
1,2,3	FAIL	No response was received within the allowable time period on one of the transmissions to the terminal. This indicates that something is wrong with the data link to the voice terminal. This could be a sleeping set problem or it may be due to wiring or an unplugged or defective set. 1. Check for errors in the error log, for example, error 1537. 2. Remotely issue **busyout** and **release busy**, and run the short test sequence on the port to check for other errors associated with the port or terminal. 3. Check the wiring to the set if it appears that the terminal is not responding to any tests; otherwise, replace the terminal and rerun the test. 4. If the test still fails, replace the circuit pack and reconnect the original terminal.
	PASS	Hybrid Line Remote Digital Loop Around Test passed. The hybrid circuit pack is sending and receiving proper messages to and from the voice terminal. 1. If problems still exist, investigate using other circuit pack tests and by examining the station, wiring, and connections.
0	NO BOARD	The test could not relate the internal ID to the port (no board). This could be due to incorrect translations, no board is inserted, an incorrect board is inserted, or an insane board is inserted. 1. Check to ensure that the board translations are correct. Use **list config**, and resolve any problems that are found. 2. If the board was found to be correctly inserted in step 1, issue the **busyout board** command. 3. Issue the **reset board** command. 4. Issue the **release busy board** command. 5. Issue the **test board long** command. This should re-establish the linkage between the internal ID and the port. If this is not the case, dispatch to check to ensure that there is a valid board inserted.

Hybrid Line Lamp Updates Test (#60)

For this test, the software lights the lamps on the terminal based on the status record contained in the processor. The lamp updates run only if the station is in-service.

Table 10-329. TEST #60 Hybrid Line Lamp Updates Test

Error Code	Test Result	Description/Recommendation
1	ABORT	A request for a remote station lamp update aborted even though all internal resources were correctly allocated. 1. Look in the error log for error type 18 (port busied out) for this port. If this error type is present, release the port via **release port PCSSpp** or the **release station extension**, and then run the test again. 2. Make sure that the terminal is connected. 3. Retry the command at 1-minute intervals for a maximum of 5 times.
2	ABORT	Internal System Error. 1. Retry the command at one-minute intervals a maximum of 5 times.
3	ABORT	The station is in a ready for service or an out of service state. This may be due to wiring or an unplugged or defective set. 1. Make sure terminal is connected and the wiring is correct. 2. Retry the command at 1-minute intervals a maximum of 5 times.
1000	ABORT	System resources required to run this test are not available. The port may be busy with a valid call. Use **display port PCSSpp** to determine the station extension number of the port. Use **status station** to determine the service state of the port. If the service state indicates that the port is in use, then the port is unavailable for certain tests. (Refer to the “Status Commands” section in Chapter 10, “Maintenance Commands and Trouble-Clearing Aids” for a full description of all possible states.) You must wait until the port is idle before retesting. Attendants are always in use (off-hook) if the handset is plugged in and the port is not busied out. 1. If the port status is idle, then retry the command at one-minute intervals a maximum of 5 times.

Continued on next page

Table 10-329. TEST #60 Hybrid Line Lamp Updates Test — *Continued*

Error Code	Test Result	Description/Recommendation
	FAIL	Internal System Error. 1. Retry the command at one-minute intervals a maximum of 5 times.
	PASS	Hybrid Line Lamp Updates completed successfully. 1. If complaints still exist, investigate by using other circuit pack tests, and by examining the station, wiring, and connections.
0	NO BOARD	The test could not relate the internal ID to the port (no board). This could be due to incorrect translations, no board is inserted, an incorrect board is inserted, or an insane board is inserted. 1. Check to ensure that the board translations are correct. Use **list config**, and resolve any problems that are found. 2. If the board was found to be correctly inserted in step 1, issue the **busyout board** command. 3. Issue the **reset board** command. 4. Issue the **release busy board** command. 5. Issue the **test board long** command. This should re-establish the linkage between the internal ID and the port. If this is not the case, dispatch to check to ensure that there is a valid board inserted.

Hybrid Line Audits Test (#61)

This is a series of three tests that are classified as audits. These audits abort if attempted on an out-of-service station. The tests are as follows:

- Switchhook Audit - This is an update of the SPE records according to the circuit packs' records.
- Bad Scan Inquiry - A message is sent uplink that contains a count that is generated due to certain events relating to the data link conditions. This is an indication of data transmission problems between the Hybrid circuit pack and the voice terminal.
- EPF Inquiry - The status of the Electronic Power Feed is sent uplink. Possible conditions are: EPF-on-ok, EPF-off, EPF-no-load, and EPF-on-overcurrent.

Table 10-330. TEST #61 Hybrid Line Audits Test

Error Code	Test Result	Description/Recommendation
	ABORT	Internal System Error
1	ABORT	The test was aborted due to an internal system error during the switchhook audit.
2	ABORT	Internal System Error occurred during bad scan inquiry audit. 1. Make sure that the station is not in an out of service state. 2. Retry the command at 1-minute intervals a maximum of 5 times.
3	ABORT	This port may have been busied out by system technician. 1. Look in the Error Log for Error Type 18 (port busied out) for this port. If this error type is present, the release the port via **release station <extension>** and run the test again. 2. Make sure that the terminal is connected. 3. Retry the command at one-minute intervals a maximum of 5 times.
1000	ABORT	System resources required to run this test are not available. The port may be busy with a valid call. Use **display port PCSSpp** to determine the station extension number of the port. Use **status station** to determine the service state of the port. If the service state indicates that the port is in use, then the port is unavailable for certain tests. (Refer to the “Status Commands” section in Chapter 10, “Maintenance Commands and Trouble-Clearing Aids” for a full description of all possible states.) You must wait until the port is idle before retesting. Attendants are always in use (off-hook), if the handset is plugged in and the port is not busied out. 1. If the port status is idle, then retry the command at one-minute intervals a maximum of 5 times.

Continued on next page

Table 10-330. TEST #61 Hybrid Line Audits Test — *Continued*

Error Code	Test Result	Description/Recommendation
1004	ABORT	The port was seized by a valid call during the test. The test has been aborted. Use **display port PCSSpp** determine the station extension number of the port. Use the **status station** to determine the service state of the port. If the service state indicates that the port is in use, then the port is unavailable for certain tests. (Refer to the “Status Commands” section in Chapter 10, “Maintenance Commands and Trouble-Clearing Aids” for a full description of all possible states.) You must wait until the port is idle before retesting. Attendants are always in use (off-hook), if the handset is plugged in and the port is not busied out. 1. Retry the command at one-minute intervals a maximum of 5 times. 2. If the test continues to abort and the port is not in use, escalate the problem.
2000	ABORT	Response to the test request was not received within the allowable time period.
	FAIL	Internal System Error. 1. Retry the command at one-minute intervals a maximum of 5 times.

Continued on next page

Table 10-330. TEST #61 Hybrid Line Audits Test — *Continued*

Error Code	Test Result	Description/Recommendation
	PASS	Hybrid Line Audits Test passed. 1. Although this test always return a PASS result, it may enter Error Types 257 or 513 into the Error Log. To determine if there are any problems that don't show up in the test result, look for these error types in the Error Log. 2. If these errors appear in the Error Log, or if user complaints still exist, investigate by using other circuit pack tests, and by examining the station, wiring, and connections.
0	NO BOARD	The test could not relate the internal ID to the port (no board). This could be due to incorrect translations, no board is inserted, an incorrect board is inserted, or an insane board is inserted. 1. Check to ensure that the board translations are correct. Use **list config**, and resolve any problems that are found. 2. If the board was found to be correctly inserted in step 1, issue the **busyout board** command. 3. Issue the **reset board** command. 4. Issue the **release busy board** command. 5. Issue the **test board long** command. This should re-establish the linkage between the internal ID and the port. If this is not the case, dispatch to check to ensure that there is a valid board inserted.

Hybrid Line Ringer Update Test (#62)

In this update, a “ringer on” or a “ringer off” message is sent to the firmware to start and stop the ringer on the set.

Table 10-331. TEST #62 Hybrid Line Ringer Update Test

Error Code	Test Result	Description/Recommendation
3	ABORT	This port may have been busied out by system technician. 1. Look in the Error Log for Error Type 18 (port busied out) for this port. If this Error Type is present, the release the port via **release station <extension>** and run the test again. 2. Make sure that the terminal is connected. 3. Retry the command at one-minute intervals a maximum of 5 times.
1000	ABORT	System resources required to run this test are not available. The port may be busy with a valid call. Use **display port PCSSpp** to determine the station extension number of the port. Use **status station** to determine the service state of the port. If the service state indicates that the port is in use, then the port is unavailable for certain tests. (Refer to the “Status Commands” section in Chapter 10, “Maintenance Commands and Trouble-Clearing Aids” for a full description of all possible states.) You must wait until the port is idle before retesting. Attendants are always in use (off-hook), if the handset is plugged in and the port is not busied out. 1. If the port status is idle, then retry the command at one-minute intervals a maximum of 5 times.
	FAIL	Internal System Error. 1. Retry the command at one-minute intervals a maximum of 5 times.

Continued on next page

Table 10-331. TEST #62 Hybrid Line Ringer Update Test — *Continued*

Error Code	Test Result	Description/Recommendation
	PASS	Hybrid Station Ringer Update passed 1. If complaints still exist, investigate using other circuit pack tests on this circuit pack, and by examining the terminal, wiring, and connections.
0	NO BOARD	The test could not relate the internal ID to the port (no board). This could be due to incorrect translations, no board is inserted, an incorrect board is inserted, or an insane board is inserted. 1. Check to ensure that the board translations are correct. Use **list config**, and resolve any problems that are found. 2. If the board was found to be correctly inserted in step 1, issue the **busyout board** command. 3. Issue the **reset board** command. 4. Issue the **release busy board** command. 5. Issue the **test board long** command. This should re-establish the linkage between the internal ID and the port. If this is not the case, dispatch to check to ensure that there is a valid board inserted.

INADS (INADS Link)

MO Name (in Alarm Log)	Alarm Level	Initial Command to Run	Full Name of MO
INADS	none	test inads-link	INADS Link

The INADS Link MO represents the software and communications link required by the switch to make a call to the Initialization and Administration System (INADS). The purpose of the INADS Link MO is to check the communications link between the DEFINITY Generic 1 and INADS and verify that the alarm notification process works correctly. An INADS technician can test the process remotely to verify that alarms are reported to INADS, or a system technician may want to test the connection while on-site at installation time or during subsequent service calls.

Although the INADS Link MO is never alarmed, the errors are logged. The errors are only logged as a result of the **test inads-link** command being issued.

Error Log Entries and Test to Clear Values

The Hardware Error Log entries are described as part of the INADS Link Test description.

Short and Long Test Sequences

The **test inads-link** command is different from other test commands. This command does not have a long or short option, and the test on the INADS Link does not have an associated test number. When the command is different from other test commands. This command does not have a long or short option, and the test on the INADS Link does not have an associated test number. When the **test inads-link** command is issued, the user immediately sees either the “Command successfully completed” or “Command failed” message command is issued, the user immediately sees either the “Command successfully completed” or “Command failed” message.

INADS Link Test (no test number)

The INADS Link Test attempts to place a call to INADS (in the background) to verify the communications link to INADS. When the **test inads-link** command is entered, the user immediately sees either “Command successfully completed” or “Command failed.” The “Command failed” message appears when a previously run command is entered, the user immediately sees either “Command successfully completed” or “Command failed” The “Command failed” message appears when a previously run **test inads-link** command is in progress or the system has active alarms which must be reported to INADS. The “Command successfully completed” means the switch will start the attempt to call INADS in two minutes (the test still runs even if Alarm Origination is disabled). The two-minute delay allows a remote INADS technician time enough to hang up the call and thus free up the INADS line so that the switch can call INADS back. As error conditions are encountered, errors are logged against INADS. Error codes 1 through 9 can be logged if the test result was “Command successfully completed” and Error Codes 10 and 11 can be logged if the test result was “Command failed.” An error is also logged against INADS if the call to INADS finally succeeds. The INADS software (release 3.2 or later) recognizes this special “test inads” type of alarm and automatically opens and then closes a trouble ticket which indicates that the reason for the trouble ticket is a command is in progress or the system has active alarms which must be reported to INADS. The “Command successfully completed” means the switch will start the attempt to call INADS in two minutes (the test still runs even if Alarm Origination is disabled). The two-minute delay allows a remote INADS technician time enough to hang up the call and thus free up the INADS line so that the switch can call INADS back. As error conditions are encountered, errors are logged against INADS. Error codes 1 through 9 can be logged if the test result was “Command successfully completed” and Error Codes 10 and 11 can be logged if the test result was “Command failed.” An error is also logged against INADS if the call to INADS finally succeeds. The INADS software (release 3.2 or later) recognizes this special “test inads” type of alarm and automatically opens and then closes a trouble ticket which indicates that the reason for the trouble ticket is a **test inads-link** command. The trouble ticket alarm contains a **TESTING INADS LINK** description field.

After entering the command, it may take as long a nine minutes for the switch to place the call and for INADS to respond. The Error Log should be examined (use the category **inads**) 10 minutes after successfully entering the command to determine if the call was successful.

Use the following table to interpret the Error Log entries.

Table 10-332. INADS Link Error Log Entries Test

Error Code	Test Result	Description/Recommendation
1	0	The call was successfully placed to INADS. No trouble found.
2	0	Informative error indicating that alarm origination was disabled at the time of the test. The test runs even if alarm origination is disabled. 1. If Alarm Origination is desired, then enable this feature via the Maintenance-Related System Parameters Form. 2. Repeat the test.
3	0	The INADS connection is currently in use. 1. Wait 10 minutes and retry this command.
4	0	INADS did not answer the alarm origination call. 1. Verify INADS is up and running. 2. Verify the INADS phone number and switch product id are correct via the Maintenance-Related System Parameters Form. 3. Enable alarm origination via the Maintenance-Related System Parameters Form and test the PR-MAINT (Maintenance/Tape Processor) by issuing the **test processor a|b** command. If PR-MAINT Tests #102 and #103 do not pass, then refer to PR-MAINT (Maintenance/Tape Processor) Maintenance documentation. 4. Retry the command.
5	0	No INADS phone number administered. 1. Administer the INADS phone number via the Maintenance-Related System Parameters Form. 2. Retry the command.
6	0	INADS did not send the acknowledgment message to the “test inads alarm” message. 1. Verify the INADS phone number and switch product id are correct via the Maintenance-Related System Parameters Form. 2. Verify INADS is up and running. 3. Retry the command.
7	0	INADS sent a negative acknowledgment to the “test inads alarm” message.
8	0	Internal system error; system received an invalid return code.

Continued on next page

Table 10-332. INADS Link Error Log Entries Test — *Continued*

Error Code	Test Result	Description/Recommendation
9	0	Internal system error 1. Try the command again at 1-minute intervals up to 5 times.
10	0	There is already a **test inads-link** command in progress. 1. Wait 10 minutes for the present command to finish. 2. Review the results of the present command by viewing the Error Log and selecting the category “inads-link.”
11	0	The switch is trying to report alarms to INADS. The test cannot be run at this time. 1. Wait 10 minutes and retry the command.

IO-PROCR (I/O Processor)

MO Name (in Alarm Log)	Alarm Level	Initial Command to Run	Full Name of MO
IOP	MAJOR	reset io-processor	I/O PROCR

An I/O Processor CPU, memory, a real-time operating system, and a driver compose the I/O Processor on the TN2401/TN794 NetPkt circuit pack. The I/O Processor supports the Data Channel data scanners and Packet Interface functions.

Error Log Entries and Test to Clear Values

Error Type	Aux Data	Associated Test	Alarm Level	On/Off Board	Test to Clear Value
0[1]	0	Any	MAJOR	ON	reset io-processor[2]
1 (a)	Any	None	MAJOR	ON	reset io-processor[2]
257 (b)	Any	None	MAJOR	ON	reset io-processor[2]
513 (c)	Any	None	MAJOR	ON	reset io-processor[2]

1 Indicates that an alarm was raised but an associated error was not entered into the hardware error log due to a momentary overload condition caused by a burst of hardware or software error reports. Run the long test sequence. Refer to the appropriate test descriptions for any failures and follow the recommended procedures.

2 An I/O Processor can only be reset if it has been taken out of service by background maintenance software.

a. **Error 1:** Background maintenance software has reset the I/O Processor as a fault recovery action.

If the switch:	Then it:
Receives 3 errors within 15 minutes	Raises on-board MAJOR alarm I/O processor

1. Check to see if Error Codes 257 or 513 are present in the hardware error log.

If Error Code 1 occurs with:	Then:
Error Code 257	Refer to Error Code 257 information
Error Code 513	Refer to Error 513
No other I/O Processor errors and MAJOR alarm	No action required

b. **Error 257:** I/O Processor firmware reported in-line error (IOP System Error). Error counter decrements once every 15 minutes, but only if background maintenance has not reset the I/O Processor 3 times.

If the switch:	Then it:
Receives 3 errors in 15 minutes	Raises on-board MAJOR alarm I/O processor

1. Reset the I/O Processor (**reset io-processor**).
2. Refer to the repair procedures for Test # 704.

c. **Error 513:** I/O Processor driver reported in-line error (IOP Handshake Failure). has been by when the driver is unable to check the sanity of the firmware. Error counter decrements once every 15 minutes, but only if background maintenance has not reset the I/O Processor 3 times.

If the switch:	Then it:
Receives 3 errors within 15 minutes	Raises on-board MAJOR alarm I/O processor

1. Reset the I/O Processor (**reset io-processor**).
2. Refer to the repair procedures for Test # 704.

System Technician-Demanded Tests: Descriptions and Error Codes

The I/O Processor Reset Test simulates exacting the Data Channel Reset Test and Packet Interface Reset Test, a resetting the I/O Processor CPU, memory, and real time operating system.

Order of Investigation	Reset Sequence	D/ND[1]
I/O Processor Demand Reset (#704)	X	D

1 D = Destructive; ND = Nondestructive

Demand Reset Test (#704)

This test is destructive.

This test executes a comprehensive set of diagnostic tests. The test aborts if the I/O Processor is in the in-service state. The test takes the I/O Processor out-of-service if background maintenance has reset it 3 times by within the last 15 minutes.

Table 10-333. TEST #703 Demand Reset Test

Error Code	Test Result	Description/Recommendation
1362	ABORT	I/O Processor is in-service. 1. Determine status of the I/O Processor (**display alarms**). 2. If the I/O Processor status is OUT, retry the command.
2000	ABORT	Response to the test was not received within the allowable time period. 1. Retry the command at 1-minute intervals, up to 3 times.
Any	FAIL	Test failed. 1. Retry the command. 2. If the problem persists, replace the TN2401/TN794 NetPkt circuit pack.
	PASS	The I/O Processor diagnostic tests passed.

IPMEDPRO (IP Media Processor Circuit Pack)

MO Name (in Alarm Log)	Alarm Level	Initial Command to Run[1]	Full Name of MO
IPMEDPRO	MAJOR	test board UUCSS sh	IP Media Processor Circuit Pack
IPMEDPRO	MINOR	test board UUCSS l	IP Media Processor Circuit Pack
IPMEDPRO	WARNING	test board UUCSS sh	IP Media Processor Circuit Pack

1 UU is the universal cabinet number (1 for PPN, 2-3 for EPNs). C is the carrier designation (A, B, C, D, or E). SS is the number of the slot in which the circuit pack resides (01 to 21).

The TN2302 (IPMEDPRO) circuit pack is the next generation H.323 platform. The TN2302 includes a 10/100 BaseT Ethernet interface to support H.323 endpoints for DEFINITY IP (Internet Protocol) trunks and H.323 endpoints. The TN2302 can perform echo cancellation, silence suppression, DTMF detection, and conferencing. It supports the following codecs, fax detection for them, and conversion between them:

- G.711 (mu-law or a-law, 64Kbps);
- G.723.1 (6.3Kbps or 5.3Kbps audio);
- G.729A (8Kbps audio);

The TN2302 IPMEDPRO circuit board is used by the DOLAN (Definity on the LAN) feature to provide voice over IP connectivity. The TN2302 can run the Media Processor (MedPro) application, which allows the TN2302 to act as a service circuit to terminate generic RTP streams used to carry packetized audio over an IP network. As part of the overall H.323 implementation, the TN2302 circuit pack handles the audio streams while the TN799 C-LAN handles the TCP/IP signaling channels. This maintenance object applies only to a TN2302 IPMEDPRO running the Media Processor application.

The Media Processor application is built upon the existing ITS software, and as such is not administered in DEFINITY as a DS1 trunk, and does not emulate a DS1 for maintenance purposes. Use the following Maintenance procedures for this application.

Error Log Entries and Test to Clear Values

Table 10-334. DS1 Interface Circuit Pack Maintenance Error Log Entries

Error Type	Aux Data	Associated Test	Alarm Level	On/Off Board	Test to Clear Value
0[1]	0	Any	Any	Any	test board UUCSS
1(a)	0	Circuit pack removed or SAKI Test (#53)	MIN/WRN	OFF	
18(b)	0	busyout board UUCSS	WARNING	OFF	release board UUCSS
23(c)	0	Board administered but not inserted	WARNING	OFF	add ds1 UUCSS
125(d)	none	Wrong board	MINOR	ON	
257(e)	65535	Control Channel Loop Test (#52)	MINOR	ON	test board UUCSS l r 20
513(f)	4352 4353 4355 4356 4358	TN2302 On board hardware errors	MINOR	ON	
1025(g)	Any	FPGA Query Test (#1406)	MINOR		
1281(h)	Any	TSI Health Query Test (#1406)			
1538(i)	Any	Circuit pack is hyperactive	MINOR	ON	
1793	Any	NIC Loss Of Signal	MIN/WRN[2]		test board UUCSS l r 2
2049(j)	Any	PPC Sanity Query Test (#1406)			
2305(k)	Any	IP Address Update			
2561(l)		Ping error			
2817(m)	Any	Ethernet Hardware Query Test (#1406)			
3073(n)	Any	Circuit pack reset Test (#53)			
3840, 3841(o)		Inconsistent downlink or board error			
3999(p)	Any	None			

1 Run the Short Test Sequence first. If all tests pass, run the Long Test Sequence. Refer to the appropriate test description and follow the recommended procedures.

2 Minor alarms on this MO may be downgraded to warning alarms based on values set in the **set options** command.

Notes:

a. **Error Type 1** - indicates that the circuit pack has been removed from the system or is not fully administered. The alarm is logged about 15 minutes after the circuit pack has been removed, or 11-minutes after the SAKI Test (#53) fails.

   To be fully administered, a IPMEDPRO circuit pack must meet *all of these 4 conditions*:

   1. Have an entry in the circuit pack form (**change circuit pack**)
   2. Have the MedPro ip address administered (**change node-names**)
   3. Be enabled (**change ip-interface**)
   4. Be physically inserted into the correct slot

   If the circuit pack has an entry in the circuit pack form and either of the other two conditions are *not* met, a MINOR alarm is logged. To resolve the error:

   1. Make sure all conditions for administration are met and that a functioning MedPro circuit pack is inserted in the correct slot

      OR

   2. Completely remove the IPMEDPRO from the system using the following steps:

      a. Remove the administered IP-Interface associated with the circuit pack.
      b. Physically remove the circuit pack from the slot.
      c. Execute the **remove medpro UUCSS** and **change circuit pack UUCSS** commands.

b. **Error Type 18** -The IPMEDPRO Interface circuit pack has been busied out by a **busyout board UUCSS** command.

   1. Release the circuit pack (**release board UUCSS**).

c. **Error Type 23** -The IPMEDPRO circuit pack is not completely administered. To be fully administered, an IPMEDPRO circuit pack must meet *all of these 4 conditions*:

   1. Have an entry in the circuit plan (**change circuit pack**)
   2. Have the IPMEDPRO IP address administered (**change node-names**)
   3. Be enabled (**change ip-interface**)
   4. Be physically inserted into the correct slot.

   A DS1 (IPMEDPRO, MEDPRO, MAPD, UDS1-BD and DS1-BD) differs from most circuit packs in that inserting the circuit pack into the switch is not enough to make the board usable. It must also be administered.

d. **Error Type 125** - No Aux Data: The wrong circuit pack is inserted in the slot where this circuit pack is logically administered.

   1. Remove the wrong circuit pack and insert the logically administered circuit pack

      OR

   2. Re-administer this slot to match the circuit pack inserted (**change circuit-pack**).

e. **Error Type 257** - is associated with a failure of the Control Channel Test #52. Refer to Control Channel Test #52 Maintenance documentation for details.

f. **Error Type 513** - indicates different hardware device problems on the board. They include an external RAM failure, and internal RAM failure, a ROM checksum failure, message corruption, and a program logic inconsistency. The counter can be alarmed if it goes over threshold. There are no associated tests for these inline errors; if they continue to happen, an alarm will occur, otherwise the counter will be decremented via the leaky bucket.

g. **Error Type 1025** - indicates FPGA failure, associated with a problem on the FPGA device located on the TN2302. The last byte of the inline error gives a hint as to the problem with the FPGA. The diagnostic strategy for this inline error is to take the switch resources associated with all of the DSPs out of service, and then to reset the FPGA. The reset of the FPGA will cause an uplink response as to whether the reset passed or not. There are several error conditions that can be sent up in the error message for the FPGA; they will all be treated as the same failure by switch software. For the repair procedure, see Associated Test #1406.

h. **Error Type 1281** - indicates TSI failures. There are potentially 2 different TSI failures that can occur: one is a TSI DSP failure, and the other is a TSI FPGA failure. Both of these failures will be looked for by switch software, but they will both cause the same response by software. The diagnostic strategy for this inline error is to take the switch resources associated with all of the DSPs out of service, and then reset the TSI (the reset downlink is slightly different depending on whether the TSI DSP or the TSI FPGA is to be reset). The reset of the TSI will cause an uplink response as to whether the reset passed or not. There are several error conditions that can be sent up in the error message for the TSI; they will all be treated as the same failure by switch software. For the repair procedure, see Associated Test #1406.

i. **Error Type 1538** - is used to indicate hyperactivity on the board. Hyperactivity on a circuit pack is when the angel is sending too many CCMS messages uplink, 400 per ten seconds for the TN2302, to switch software. The circuit pack will be taken out of service. See error Type 3999.

j. **Error Type 2049** - indicates that the processor, specifically the Power PC, 860T hardware is failing. The PPC provides the Angle functionality as well as the UDP/IP interface; an attempt is made to reset the board automatically. For the repair procedure, see Associated Test #1406. If the reset fails, the board is probably bad and should be replaced.

k. **Error Type 2305** - indicates an IP address inconsistency between switch software and the IPMEDPRO board. If this error occurs, an attempt will be made to download the IP address again. If the board still refuses the IP address, the board will be reset.

l. **Error Type 2561** - indicates that the ping test has failed. The diagnostics that are run by this failure start up analysis testing and rerun the test. Testing will continue until the problem is cleared. However, once the counter reaches threshold, an attempt will be made to refresh the IP address to the board.

m. **Error Type 2817** - indicates an Ethernet hardware failure on the TN2302 circuit pack. The diagnostic strategy for this inline error is to take the switch resources associated with all of the DSPs out of service and then reset the Ethernet hardware. The reset of the Ethernet hardware will cause an uplink response as to whether the reset passed or not. There are several error conditions that can be sent up in the error message for this problem; they will all be treated as the same failure by switch software. For the repair procedure, see Associated Test #1406.

n. **Error Type 3073** - is associated with a circuit board reset. The diagnostic strategy for these inline errors is to take the switch resources associated with all of the DSPs out of service and then reset the board, as the failure of the Scotch is severe enough to warrant a board reset. After the board reset a query can be made again for the health of the Scotch devices to verify whether they are OK. If they are, the alarm and counters will be cleared; if not, the alarm will be left up, all DSPs will be left out of service, and maintenance diagnostics will stop. If the board continues to fail with this error type, replace the TN2302.

o. **Error Types 3840, 3841** - indicate inconsistent downlink message. These errors are not service-affecting. No action is required.

p. **Error Type 3999** - indicates that the circuit pack sent a large number of control channel messages to the switch within a short period of time. If Error Type 1538 is also present, then the circuit pack was taken out-of-service due to hyperactivity. If Error Type 1538 is not present, then the circuit pack has not been taken out-of-service, but it has generated 50% of the messages necessary to be considered hyperactive. This may be completely normal during heavy traffic periods. However, if this error type is logged when the circuit pack is being lightly used, it may indicate a problem with the circuit pack or the equipment attached to it.

System Technician-Demanded Tests: Descriptions and Error Codes

Investigate tests in the order they are presented in Table 10-335. By clearing error codes associated with the *Control Channel Loop Test,* for example, you may also clear errors generated from other tests in the testing sequence.

Table 10-335. System Technician-Demanded Tests

Order of Investigation	Short Test Sequence	Long Test Sequence	Reset Board Sequence	D/ND[1]
Control Channel Loop Test (#52)	X	X		ND
SAKI Sanity Test (#53)		X	X	D
IP Address Query (#1371)	X	X		D
NIC Query Test (#1383)	X	X		ND
Local Ping Test (#1379)	X	X		ND
MP Diagnostic Test (#1406)		X	X	D

1 D = Destructive; ND = Nondestructive

Control Channel Looparound Test (#52)

This test queries the circuit pack for its circuit pack code and vintage and verifies its records.

Table 10-336. TEST #52 Control Channel Looparound Test

Error Code	Test Result	Description/Recommendation
None 2100	ABORT	System resources required for this test are not available. 1. Retry the command at 1-minute intervals a maximum of 5 times.

Continued on next page

Table 10-336. TEST #52 Control Channel Looparound Test — *Continued*

Error Code	Test Result	Description/Recommendation
	FAIL	The circuit pack failed to return the circuit pack code or vintage. 1. Retry the command a maximum of 5 times. 2. If the problem continues, replace the circuit pack. 3. Retry the command a maximum of 5 times.
	PASS	Communication with this circuit pack is successful.
0	NO BOARD	The test could not relate the internal ID to the port (no board). This could be due to incorrect translations, no board is inserted, an incorrect board is inserted, or an insane board is inserted. 1. Ensure that the board translations are correct. Administer the MedPro interface if it is not already administered. 2. If the board was already administered correctly, check the error log to determine whether the board is hyperactive. If this is the case, the board is shut down. Reseating the board re-initializes the board. 3. If the board was found to be correctly inserted in step 1, then issue the busyout board UUCSS command. 4. Issue the reset board UUCSS command. 5. Issue the release board UUCSS command. 6. Issue the test board UUCSS long command. This should re-establish the linkage between the internal ID and the port.

SAKI Sanity Test (#53)

This is a destructive test.

This test is only run as a part of a reset board procedure. For the Media Processor, it is necessary to use the **change ip-interfaces** form to disable the Media Processor IP interface before performing this reset board procedure. Other common circuit packs can be reset with the **reset board UUCSS** command which also executes this test.

A reset of this circuit pack will take about 3 1/2 minutes.

Table 10-337. TEST #53 SAKI Sanity Test

Error Code	Test Result	Description/Recommendation
None	ABORT	System resources required for this test are not available. 1. Retry the command at 1-minute intervals a maximum of 5 times.
1015	ABORT	Port is not out-of-service. 1. Busy out the circuit pack. 2. Execute command again.
2100	ABORT	System resources required for this test are not available. 1. Retry the command at 1-minute intervals a maximum of 5 times.
2803	ABORT	It is necessary to reset the board. 1. Use the change ip-interfaces form to disable the Media Processor IP interface. 2. Execute the command again.
1	FAIL	The circuit pack failed to reset. 1. Execute command again. 2. If the problem persists, replace the circuit pack.
2, 2000	FAIL	The circuit pack failed to restart. 1. Execute command again. 2. If the problem persists, replace the circuit pack.
	PASS	The circuit pack initializes correctly. 1. Run the short test sequence.
Any	NO BOARD	This is normal if the test is being done when (a) the board is not physically in the system or (b) the system is booting up. Otherwise, there is some inconsistency between the physical configuration and the data kept in the system. 1. Verify that the board is physically in the system. 2. Verify that the system is not in a stage of booting up. 3. Retry the command at 1-minute intervals for a maximum of 5 times.

IP Address Query Test #1371

This test is destructive.

This test sends the Media processor the IP address, subnet mask, and gateway translation (IP parameters). If the parameters do not match DEFINITY translation, the maintenance sub-system reboots the board. The board goes through a physical board removal and insertion.

When this test fails, it is an indication that an illegal change was made and the customer should be notified.

Table 10-338. TEST #1371 IP Address Query Test

Error Code	Test Result	Description/Recommendation
	ABORT	Internal system error 1. Retry the command at 1-minute intervals a maximum of 5 times.
2100	ABORT	Insufficient system resources to run this test. 1. Retry the command at 1-minute intervals a maximum of 5 times.
2801	ABORT	Unable to find IP address data for this location. Verify that the board is administered.
2807	ABORT	The board is administered, but not enabled in the change ip-interfaces form.
	FAIL	The IP address, subnet mask, and gateway translation parameters do not match DEFINITY translations. The board goes through a physical board removal and insertion. 1. If the problem persists, replace the circuit pack.
	PASS	Translation data matches.

NIC Query Test (#1383)

This test is non-destructive.

This test passes if the Ethernet port is connected and you can talk on the network. Otherwise it fails with no fail code or AUX data.

Table 10-339. TEST #1383 NIC Query Test

Error Code	Test Result	Description/Recommendation
None	ABORT	System resources required for this test are not available. 1. Retry the command at 1-minute intervals a maximum of 5 times.
1015	ABORT	Port is not out-of-service. 1. Busyout the circuit pack (busyout board UUCSS). 2. Execute the command again.
2100	ABORT	System resources required for this test are not available. 1. Retry the command at 1-minute intervals a maximum of 5 times.
	FAIL	The Ethernet port is not connected and you cannot talk on the network.
	PASS	The Ethernet port is connected and you can talk on the network
0	NO BOARD	The test could not relate the internal ID to the port (no board). This could be due to incorrect translations, no board is inserted, an incorrect board is inserted, or an insane board is inserted. 1. Ensure that the board translations are correct. Administer the MedPro interface if it is not already administered. 2. If the board was already administered correctly, check the error log to determine whether the board is hyperactive. If this is the case, the board is shut down. Reseating the board re-initializes the board. 3. If the board was found to be correctly inserted in step 1, then issue the busyout board UUCSS command. 4. Issue the reset board UUCSS command. 5. Issue the release board UUCSS command. 6. Issue the test board UUCSS long command. This should re-establish the linkage between the internal ID and the port.

Ping Test (#1379)

This test is non-destructive

This test verifies that the MedPro circuit pack can communicate to other nodes on the LAN.

This test pings the gateway IP address as defined on the IP Interface form.

If the PING is successful, this test looks at the PING round trip delay. If a round trip delay of greater than 4 seconds is reported, a separate error is logged. Excessive round trip delays do not take the MedPro out of service.

Services can execute the standard PING command using the C-LAN board address and MedPro IP address to see the actual round-trip delay. (See **ping** commands).

This test is a nondestructive test. It runs due to in-line errors, during periodic and scheduled maintenance, and on demand.

Table 10-340. TEST #1379 Ping Test

Error Code	Test Result	Description/Recommendation
1, 2	ABORT	Internal Error. 1. Retry the command at 1-minute intervals a maximum of 3 times.
7	ABORT	Destination unreachable. 1. Verify that at least one destination reachable through this port is up. 2. Repeat the test. 3. If the test still aborts, escalate the problem.
2000	ABORT	Response to the test was not received from the Media Processor circuit pack within the allowable time period. 1. If this result occurs repeatedly, attempt to reset the circuit pack. Reset the circuit pack by issuing the busyout board UUCSS and the reset board UUCSS commands. 2. If this result occurs again, replace the circuit pack.
2012	ABORT	Internal system error. 1. Retry the command at 1-minute intervals a maximum of 3 times.

Continued on next page

Table 10-340. TEST #1379 Ping Test — *Continued*

Error Code	Test Result	Description/Recommendation
2100	ABORT	The necessary system resources to execute the test could not be allocated. 1. Retry the command at 1-minute intervals a maximum of 5 times.
2500	ABORT	Internal system error. 1. Retry the command at 1-minute intervals a maximum of 3 times.
2801	ABORT	No IP address defined. Verify IP Interfaces translations and retest.
2802	ABORT	Different IP address pinged than software had allocated for the test. 1. Retry the command at 1-minute intervals a maximum of 3 times.
2805	FAIL	The number of pings received did not match the number sent (normally one ping sent). This means that no ping responses were received from the gateway defined on the ip-interfaces form for the Media Processor. 1. Retry the command at 1-minute intervals a maximum of 3 times.
2807	ABORT	The board is administered but not enabled in the change ip-interfaces form.
7, 89, 1007	FAIL	A Ping to the destination failed through this port. This failure is because the destination is down. 1. Verify that at least one destination is reachable through this port. 2. Once verified, execute the test port UUCSSpp command to verify that the H.323 Signaling Group Ping Test (#1387) passes.
	PASS	Ping through this port successful.

MP Diagnostic Test (#1406)

This test is destructive.

The MP Diagnostic Test (#1406) runs all of the diagnostic tests listed below, in the order listed, but only if each successive test passes:

1. FPGA Query
2. TSI Query
3. ETHERNET Query
4. SCOTCH Sanity

FPGA Query

This test passes if the FPGA device on the TN2302 tests ok. Otherwise it fails with no fail code or AUX data.

This test verifies the status of the FPGA device on the TN2302 circuit pack. If the device is bad, software sets an appropriate counter, posts an error and alarm, and takes all DSPs out of service (all DSPs are controlled by the one FPGA). Software then attempts to reset the FPGA. If the reset passes or the original test passes, the DSPs are placed into service.

TSI DSP Query

This test passes if the TSI device on the TN2302 tests ok. Otherwise it fails with no fail code or AUX data.

This test verifies the status of the TSI device on the TN2302 circuit pack. If the device is bad, software sets an appropriate counter, posts an error and alarm, and takes all DSPs out of service (all DSPs are controlled by the one TSI). Software then attempts to reset the TSI. If the reset passes or the original test passes, the DSPs are placed into service.

Ethernet Query

This test passes if the TN2302 hardware tests ok and the Ethernet port is connected. Otherwise it fails with no fail code or AUX data.

SCOTCH Sanity

The Scotch device on a board communicates with switch software via the TDM bus for conferencing and gain adjustment. This is done by setting up connections on TDM bus time slots.

There are 3 different inline errors that can be generated due to the Scotch devices on the board: *NPE SCOTCH 0*, *NPE SCOTCH 1*, and *NCE SCOTCH*. If any of these errors are reported from the board, the DSPs are taken from service and a circuit pack reset is executed by running the SAKI test.

Table 10-341. TEST #1406 MP Diagnostic Test

Error Code	Test Result	Description/Recommendation
2012	ABORT	System error: 1. Retry the command at 1-minute intervals a maximum of 5 times.
2100	ABORT	System resources required for this test are not available. 1. Retry the command at 1-minute intervals a maximum of 5 times.
	FAIL	The MP Diagnostic test has failed for this TN2302 and the board is in the OOS state. 1. Issue the busyout board UUCSS command. 2. Issue the reset board UUCSS command. 3. Issue the release board UUCSS command. 4. Issue the test board UUCSS long command. If the board continues to fail replace the board.
8192 - 8328	FAIL	The FPGA DSP test failed: 1. Issue the busyout board UUCSS command. 2. Issue the reset board UUCSS command. 3. Issue the release board UUCSS command. 4. Issue the test board UUCSS long command. If the board continues to fail replace the board.
8448 - 8584	FAIL	The TSI FPGS test failed: 1. Issue the busyout board UUCSS command. 2. Issue the reset board UUCSS command. 3. Issue the release board UUCSS command. 4. Issue the test board UUCSS long command. If the board continues to fail replace the board.
12288 - 12424	FAIL	The TSI DSP test failed: 1. Issue the busyout board UUCSS command. 2. Issue the reset board UUCSS command. 3. Issue the release board UUCSS command. 4. Issue the test board UUCSS long command. If the board continues to fail replace the board.

Continued on next page

Table 10-341. TEST #1406 MP Diagnostic Test — *Continued*

Error Code	Test Result	Description/Recommendation
16384 - 16900	FAIL	A SCOTCH device failed: 1. Issue the busyout board UUCSS command. 2. Issue the reset board UUCSS command. 3. Issue the release board UUCSS command. 4. Issue the test board UUCSS long command. If the board continues to fail replace the board.
24576 - 24580	FAIL	An ETHERNET device failed: 1. Issue the busyout board UUCSS command. 2. Issue the reset board UUCSS command. 3. Issue the release board UUCSS command. 4. Issue the test board UUCSS long command. If the board continues to fail replace the board.
	PASS	The FPGA device on this TN2302 is operating correctly
0	NO BOARD	The test could not relate the internal ID to the port (no board). This could be due to incorrect translations, no board is inserted, an incorrect board is inserted, or an insane board is inserted. 1. Ensure that the board translations are correct. Administer the IPMEDPRO interface if it is not already administered. 2. If the board was already administered correctly, check the error log to determine whether the board is hyperactive. If this is the case, the board is shut down. Reseating the board re-initializes the board. 3. If the board was found to be correctly inserted in step 1, then issue the busyout board UUCSS command. 4. Issue the reset board UUCSS command. 5. Issue the release board UUCSS command. 6. Issue the test board UUCSS long command. This should re-establish the linkage between the internal ID and the port.

ISDN-LNK (ISDN-PRI Signaling Link Port)

MO Name (in Alarm Log)	Alarm Level	Initial Command to Run[1]	Full Name of MO
ISDN-LNK[2]	MINOR	test port PCSSpp l	ISDN-PRI Signaling Link Port
ISDN-LNK	WARNING	test port PCSSpp sh	ISDN-PRI Signaling Link Port

1 Where 'pp' is '24' for 24-channel interfaces, and '16' for 32-channel interfaces.

2 For additional repair information, see also DS1-BD (DS1 Interface Circuit Pack) or UDS1-BD (Universal DS1 Interface Circuit Pack) Maintenance documentation.

NOTE:
Use this Maintenance Object (ISDN-LNK) for maintenance tests, alarms, and hardware errors when the "ISDN-PRI over PACCON" option on the *system-parameters customer* form is set to a "**n**". When the ISDN PRI over PACCON is set to "**y**" use Maintenance Object ISDN-PLK.

When the ISDN-PRI over PACCON option is set to "**n**", the ISDN-PRI D-channel call control messages are transmitted over the TDM bus to the Processor Interface circuit pack and you must use this Maintenance Object for PRI Link problems.

An ISDN-PRI Signaling Link is known as a D-channel. D-channels are used to transmit call control signaling for B-channels. The call control signaling for the B-channels is combined and carried over separate ISDN-PRI D-channels. User information (for example, digitized voice, digital data) channels are known as bearer channels (B-channels); DS1 ISDN Trunks are B-channels and they carry the user traffic. PRI endpoint ports are also B-channels that can carry Wideband traffic.

The ISDN-PRI Signaling Link Port (ISDN-LNK) and the associated DS1/UDS1 ISDN Trunk (ISDN-TRK) or PRI endpoint port (PE-BCHL) use ports on a TN767 or TN464B or later DS1/UDS1 interface circuit pack (the TN722 cannot be used for this application). The TN767 is used for 24 channel 1.544 Mbps systems. The TN464B is used for 32 channel 2.048 Mbps systems. The TN464C or later can be used for either 24 or 32 channel systems. A description of these circuit packs appears in "DS1-BD" or "UDS1-BD".

In a 24 channel system, the DS1 ISDN Trunk or PRI endpoint port (B-channels) may use any of the first 23 ports. The ISDN-PRI Signaling Link Port must be the 24th port. In certain configurations (NFAS), the 24th port may be used as a B-channel. Refer to "ISDN-PRI Signaling Group" for further details.

In a 32 channel system, the DS1/UDS1 ISDN Trunk or PRI endpoint port (B-channels) may use any of the ports 1-15 or 17-31, but the ISDN-PRI Signaling Link Port must be the 16th port. In certain configurations (NFAS), the 16th port may be used as a B-channel. Refer to the ISDN-PRI Signaling Group (ISDN-SGR) Maintenance documentation for further details.

ISDN-LNK handles maintenance and recovery for the D-channel port on the DS1 carrying the signaling link. A problem with the ISDN-PRI Signaling Link Port (D-channel) has an effect on all of the associated DS1 ISDN Trunks or PRI endpoint ports (B-channels) since no call control information can be conveyed to the far-end switch without it. Stable calls may remain operational, but no new calls can be made.

The ISDN-PRI Signaling Link Port itself depends on two other entities: the DS1/UDS1 Interface circuit pack it resides on, and the Processor Interface Link that provides the link to the processor. If there are problems with the ISDN-PRI Signaling Link Port, also investigate the DS1/UDS1 interface circuit pack and the Processor Interface Link.

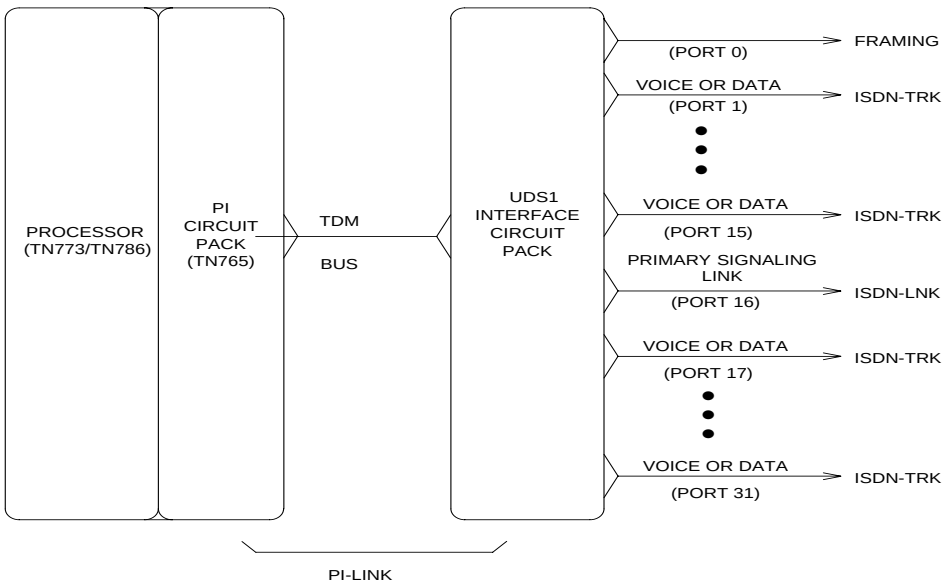

Figure 10-34. ISDN-PRI Signaling Link Port Interactions (32-Channel)

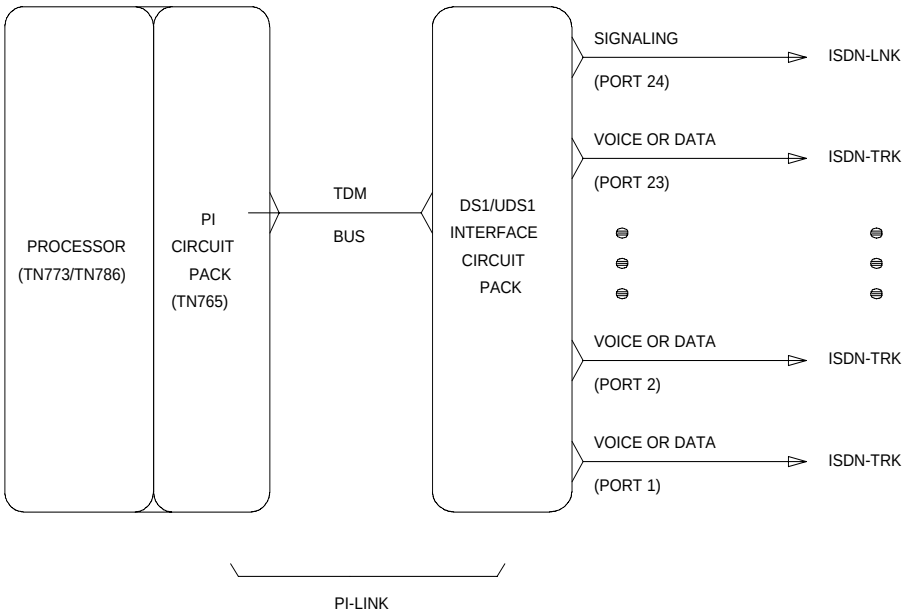

Figure 10-35. ISDN-PRI Signaling Link Port Interactions (24-Channel)

Error Log Entries and Test to Clear Values

Table 10-342. ISDN-PRI Signaling Link Port Error Log Entries

Error Type	Aux Data	Associated Test	Alarm Level	On/Off Board	Test to Clear Value
0[1]	0	Any	Any	Any	test port PCSSpp sh r 1 (c)
18	0	busyout port PCSSpp (c)	WARNING	OFF	release port PCSSpp (c)
130 (a)		None	WARNING	ON	test port PCSSpp sh (c)
1537 (b)		NPE Crosstalk Test #6	MINOR	ON	test port PCSSpp l r 3 (c)

1 Run the short test sequence first. If all tests pass, run the long test sequence. Refer to the appropriate test description and follow the recommended procedures.

Notes:

a. Indicates that the circuit pack has been removed or has been insane for more than 11 minutes. To clear, reinsert or replace the circuit pack.

b. The actual alarming level depends on the options chosen via the **set options** command on the Manager terminal. ISDN-PRI Signaling Link Port alarms are treated as Station alarms, and their default alarming option is to downgrade all alarms to Warning. The value shown in the preceding table indicates the normal, unfiltered case (option "**y**" on the Set Options form).

c. 'pp' is '24' for 24-channel interfaces, and '16' for 32-channel interfaces.

System Technician-Demanded Tests: Descriptions and Error Codes

Always investigate tests in the order presented in the table below. By clearing error codes associated with the *NPE Crosstalk Test*, for example, you may also clear errors generated from other tests in the testing sequence. The command line entry to test the ISDN-LNK MO is: **test port PCSSxx (sh or l)**, where 'xx' is '24' for 24-channel interfaces, and '16' for 32-channel interfaces.

Order of Investigation	Short Test Sequence	Long Test Sequence	D/ND[1]
NPE Crosstalk Test (#6)		X	ND
Signaling Link Board Check (#643)	X	X	ND

1 D = Destructive; ND = Nondestructive

NPE Crosstalk Test (#6)

The NPE Crosstalk Test verifies that this port's NPE channel talks on the selected time slot and never crosses over to time slots reserved for other connections. If the NPE is not working correctly, one-way and noisy connections may be observed. This test is usually only part of a port's Long Test Sequence and takes about 20 to 30 seconds to complete. This test runs only if the Processor Interface link corresponding to this ISDN-LNK MO is busied out by system technician. The Processor Interface link number can be determined from the Communication-Interface Links form.

Table 10-343. TEST #6 NPE Crosstalk Test

Error Code	Test Result	Description/Recommendation
	ABORT	Could not allocate the necessary system resources to run this test. 1. Retry the command at 1-minute intervals a maximum of 5 times.
1000	ABORT	System resources for this test are not available. The ISDN-PRI link may be up and servicing calls. First obtain the ISDN-PRI link number (lnk-no) from the Communication-Interface Links form by issuing **display communication-interfaces links**. Then, determine the status of the ISDN-PRI link via **status link lnk-no**. If the link is in-service, this test aborts. Therefore, to run this test, the link must be busied out. No new ISDN-PRI calls can be made while the link is in the busied-out state. 1. If the test must be run, busyout the link. 2. Retry the command.
1001	ABORT	Could not allocate the necessary system resources to run this test. 1. Retry the command at 1-minute intervals a maximum of 5 times.
1002	ABORT	The system could not allocate time slots for the test. The system may be under heavy traffic conditions or it may have time slots out-of-service due to TDM-BUS errors. Refer to TDM-BUS (TDM Bus) Maintenance to diagnose any active TDM-BUS errors. 1. If the system has no TDM-BUS errors and is not handling heavy traffic, repeat the test at 1-minute intervals a maximum of 5 times.
1003	ABORT	The system could not allocate a tone receiver for the test. The system may be oversized for the number of Tone Detectors present or some Tone Detectors may be out-of-service. 1. Look for TTR-LEV errors in the Error Log. If present, refer to TTR-LEV (TTR Level) Maintenance documentation. 2. Look for TONE-PT errors in the Error Log. If present, refer to TONE-PT (Tone Generator) Maintenance documentation. 3. If neither condition exists, retry the test at 1-minute intervals a maximum of 5 times.

Continued on next page

Table 10-343. TEST #6 NPE Crosstalk Test — *Continued*

Error Code	Test Result	Description/Recommendation
2000	ABORT	Response to the test request was not received within the allowable time period. 1. Retry the command at 1-minute intervals a maximum of 5 times.
2020	ABORT	The test did not run due to an already existing error on the specific port or a more general circuit pack error. 1. Examine Error Log for existing errors against this port or the circuit pack and attempt to diagnose the already existing error.
2100	ABORT	Could not allocate the necessary system resources to run this test. 1. Retry the command at 1-minute intervals a maximum of 5 times.
Any	FAIL	The NPE of the tested port was found to be transmitting in error. This causes noisy and unreliable connections. 1. Replace the DS1-BD Interface circuit pack.
	PASS	The port is able to communicate over the TDM Bus.

Signaling Link Board Check (#643)

This ISDN-PRI Signaling Link Port D-channel depends on the health of the DS1 Interface circuit pack. This test checks the state of the DS1 Interface circuit pack transporting the ISDN-PRI Signaling Link Port.

Table 10-344. TEST #643 Signaling Link Board Check

Error Code	Test Result	Description/Recommendation
	ABORT	Internal system error 1. Retry the command at 1-minute intervals a maximum of 5 times.
1700	ABORT	Rollabout video abort. The PRI terminal adapter associated with this D-channel port is detached from the circuit pack. This is a normal abort when the rollabout video feature is enabled. To complete test on this port, either: 1. Re-attach the disconnected PRI terminal adapter and retry test command, or 2. Disable the rollabout video feature on this circuit pack by entering **change ds1 PCSS** and set the **"Alarm when PRI Endpoint Detached** field to **"y."**
8	FAIL	The DS1 circuit pack is not in-service. 1. Check the Hardware Error Log for entries logged against DS1-BD and consult the DS1-BD (DS1 Interface Circuit Pack) Maintenance documentation for repair procedures.
	PASS	The DS1 Interface circuit pack transporting the ISDN-PRI Signaling Link Port is in-service.

ISDN-PLK (ISDN-PRI Signaling Link Port)

MO Name (in Alarm Log)	Alarm Level	Initial Command to Run[1]	Full Name of MO
ISDN-PLK[2]	MINOR	test port PCSSpp l	ISDN-PRI Signaling Link Port
ISDN-PLK	WARNING	test port PCSSpp sh	ISDN-PRI Signaling Link Port

1 Where 'pp' is '24' for 24-channel interfaces, and '16' for 32-channel interfaces.

2 For additional repair information, see also PKT-CTRL (Packet Control), DS1-BD (DS1 Interface Circuit Pack) or UDS1-BD (Universal DS1 Interface Circuit Pack).

NOTE:
Use this Maintenance Object (ISDN-PLK) for maintenance tests, alarms, and hardware errors when the "ISDN-PRI over PACCON" option on the *system-parameters customer* form is set to a "**y**" When the ISDN PRI over PACCON is set to "**n**" use Maintenance Object ISDN-LNK.

The ISDN-PRI over PACCON option allows the PRI Links to be carried over the PACCON (Packet Controller TN778 circuit board), increasing the system ISDN-PRI capacity to the possible number of D-channels. An ISDN-PRI Signaling Link is known as a D-channel. The D-channel is used to transmit call-control signaling for the B-channels. B-channels (User information channels) are known as bearer channels (B-channels for example, transmit digitized voice, digital data); DS1 ISDN Trunks are B-channels and they carry the user traffic. PRI endpoint ports are also B-channels that can carry Wideband traffic. The call control signaling for the B-channels is combined and carried over the separate ISDN-PRI Signaling Link Port D-channel.

The ISDN-PRI Signaling Link Port is the port on a TN464C or later UDS1 Interface circuit pack that carries D-channel messages to the processor. The ISDN-PRI interface uses out-of-band signaling as opposed to robbed-bit, in-band signaling. For G3s, and G3i, this port can be used as an interface to the TDM bus or to the Packet bus. This is controlled by the "ISDN-PRI over PACCON" option. When the option is set to "**y**" the ISDN-PRI D-channel messages are transmitted over the Packet bus to the Packet Control circuit pack. The associated maintenance object name of the UDS1 port used to carry the D-channel over the Packet Bus is ISDN-PLK.

The B-channels associated with a ISDN-PRI D-channel can use ports on the same circuit pack or ports on other TN464C or later or TN767 DS1 Interface circuit packs (the TN722 cannot be used for this application).

The TN767 DS1 interfaces is used for 24 channel 1.544 Mbps systems. The TN464C or later can be used for either 24 or 32 channel systems. The 32-channel (31 DS0 channels + 1 framing channel on a 2.048 Mbps link) are only supported on TN464 series circuit packs. A description of these circuit packs appears in DS1-BD or UDS1-BD maintenance documentation.

In a 24 channel system, the DS1 ISDN Trunk or PRI endpoint port (B-channels) may use any of the first 23 ports. The ISDN-PRI Signaling Link Port must be the 24th port. In certain configurations (NFAS), the 24th port may be used as a B-channel. Refer to the ISDN-PRI Signaling Group (ISDN-SGR) Maintenance documentation for further details.

In a 32 channel system, the DS1 ISDN Trunk or PRI endpoint port (B-channels) may use any of the ports 1-15 or 17-31, but the ISDN-PRI Signaling Link Port must be the 16th port. In certain configurations (NFAS), the 16th port may be used as a B-channel. Refer to the ISDN-PRI Signaling Group (ISDN-SGR) Maintenance documentation for further details.

ISDN-PLK handles maintenance and recovery for the D-channel port on the DS1 carrying the signaling link. A problem with the ISDN-PRI Signaling Link Port (D-channel) has an effect on all of the associated DS1 ISDN Trunks or PRI endpoint ports (B-channels) since no call control information can be conveyed to the far-end switch or Terminal Adapter without it. Stable calls may remain operational, but no new calls can be made.

The ISDN-PRI Signaling Link Port (ISDN-PLK) itself depends on two other entities: the UDS1 interface circuit pack (TN464) it resides on, and the Packet bus which provides the link to the processor. If there are problems with the ISDN-PLK, also investigate the TN464 UDS1 interface circuit pack (UDS1-BD) and the packet bus (PKT-BUS).

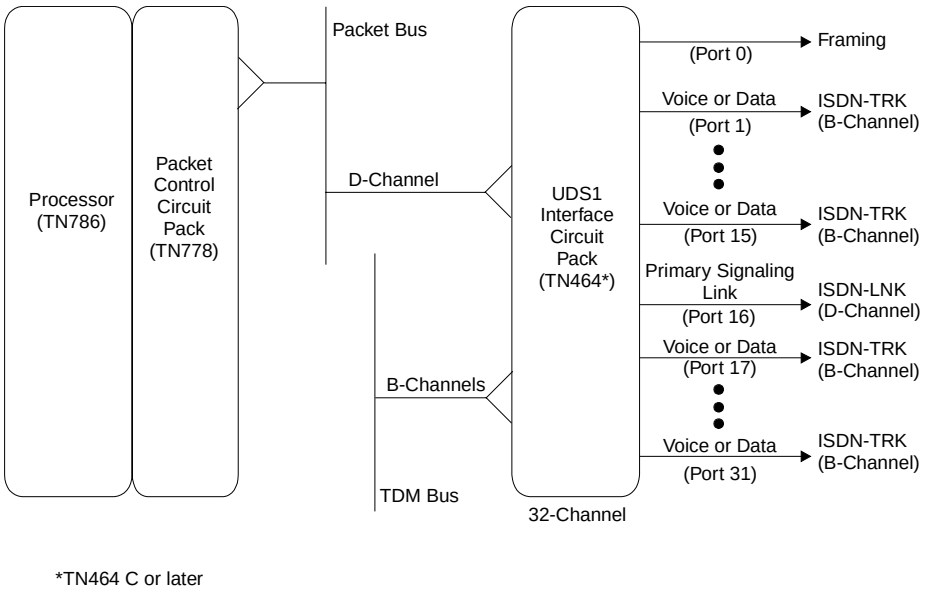

Figure 10-36. ISDN-PRI Signaling Link Port Interactions (32-Channel)

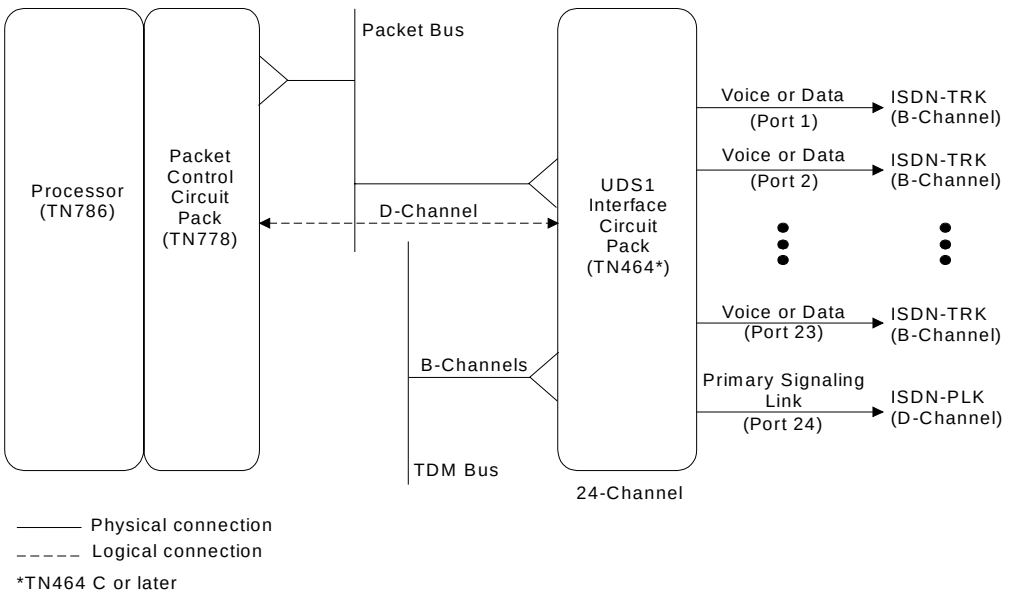

Figure 10-37. FAS ISDN-PRI Over PACCON Signaling Group (24 Channel)

Error Log Entries and Test to Clear Values

Table 10-345. ISDN-PRI Signaling Link Port Error Log Entries

Error Type	Aux Data	Associated Test	Alarm Level	On/Off Board	Test to Clear Value
0[1]	0	Any	Any	Any	test port PCSSpp[2]
18(a)	0	busyout port PCSSpp*	WARNING	OFF	release port PCSSpp[2]
130 (b)		None	WARNING	ON	test port PCSSpp[2]
1537 (c)	46210		WARNING	OFF	
1793 (d)					test board PCSSpp[2]1
3585 (e)	46222		MINOR	ON	
3841 (f)	46211				
3842 (g)	46223				
3843 (h)		Signaling Port Packet Bus (LAN) Loopback test (#939)			test port PCSSpp[2]1

1 Run the short test sequence first. If all tests pass, run the long test sequence. Refer to the appropriate test description and follow the recommended procedures.

2 pp is 24-channel interfaces and 16 for 32-channel interfaces.

Notes:

a. The D-channel is demand busied out. No calls can be made over this D-channel.

b. This error type indicates that the circuit pack has been removed or has been insane for more than 11 minutes. To clear the error, reinsert or replace the circuit pack.

c. “Link error” This error occurs when the port receives an invalid frame over the D-channel. This error normally indicates an off-board problem usually related to transmission errors on the DS1 facility. Execute the **list measurements ds1-log** command for the UDS1 TN464 circuit pack on which the D-channel resides. If the UDS1 is reporting some errors, then the DS1 facility has experienced transmission problems which could have caused the ISDN-PLK to report a Link Error. If the UDS1 is not reporting errors, execute the long test sequence for the D-channel (ISDN-SGR). Investigate any errors, if there are none execute a long test sequence for the UDS1 circuit pack (UDS1-BD) and investigate any errors.

   If no errors are reported, the Link Error is probably not affecting service.

d. The UDS1 Interface circuit pack is out-of-service. Look for and resolve UDS1-BD errors in the Hardware Error Log.

e. “Transmit FIFO Overflow error” This error indicates that the circuit pack is having problems transmitting data to the Packet Bus, thus affecting the conveyance of signaling information over the D-channel. Specifically, this error occurs when the Packet Bus transmit buffers overflow. This condition probably indicates a hardware problem.

   The actual alarming level depends on the options chosen via the **set options** command on the G3-MT terminal. ISDN-PRI Signaling Link Port alarms are treated as Station alarms, and their default alarming option is to downgrade all alarms to Warning. The value shown in the preceding table indicates the normal, unfiltered case (option “y” on the *Set Options* form).

f. “Bad DLCI error” This error occurs when a LAPD frame is received across the DS1 facility which contains a DLCI which does not have a valid entry in the on-board translation memory. This error normally indicates an off-board problem usually related to a broken endpoint or a state mismatch between a remote endpoint and the local call processing software. Maintenance will not start any testing or generate any alarms in response to this error.

g. “Receive FIFO Overflow error” This error occurs when the circuit pack detects an overflow of its receive buffers. If it occurs frequently, it may indicate a LAPD parameter mismatch between the two end-points of a packet switched connection. LAPD should be able to recover from this problem, but it may degrade the performance of the Packet Bus. Maintenance will not start any testing or generate any alarms in response to this error.

h. This error occurs when the *Signaling Port Packet Bus Loopback Test (#939)* fails. Run the long test sequence and pay particular attention to the results of *Test #939*.

System Technician-Demanded Tests: Descriptions and Error Codes

Always investigate tests in the order presented in the table below when inspecting errors in the system. REMINDER: The command line entry to test the ISDN-PLK MO is: **test port PCSSpp (sh or l)**, where ‘pp’ is ‘24’ for 24-channel interfaces, and ‘16’ for 32-channel interfaces.

Order of Investigation	Short Test Sequence	Long Test Sequence	D/ND[1]
Signaling Port Bus Loopback Test (#939)		X	D
Signaling Link Board Check (#643)	X	X	ND

1 D = Destructive; ND = Nondestructive

Signaling Link Board Check (#643)

This test checks the state of the UDS1 Interface circuit pack (TN464C or later) transporting the ISDN-PRI Signaling Link.

Table 10-346. TEST #643 Signaling Link Board Check

Error Code	Test Result	Description/Recommendation
	ABORT	Internal system error 1. Retry the command at 1-minute intervals a maximum of 5 times.
1700	ABORT	Rollabout video abort. The PRI terminal adapter associated with this D-channel port is detached from the circuit pack. This is a normal abort when the rollabout video feature is enabled. To complete test on this port, either: 1. Re-attach the disconnected PRI terminal adapter and retry test command, or 2. Disable the rollabout video feature on this circuit pack by entering **change ds1 PCCSS** and set the field **"Alarm when PRI Endpoint Detached?"** to **"y."**
8	FAIL	The UDS1 circuit pack (TN464C or later) is not in-service. 1. Check the Hardware Error Log for entries logged against UDS1-BD and consult the UDS1-BD (UDS1 Interface Circuit Pack) Maintenance documentation for repair procedures.
	PASS	The UDS1 Interface circuit pack transporting the ISDN-PRI Signaling Link Port is in-service.

Signaling Port Packet Bus Loopback Test (#939)

This test verifies the connectivity of an ISDN-PRI Signaling Port (D-channel) across the Packet Bus, also known as the LAN bus. It will execute only if the port is busied out. Failure of this test indicates a fault associated with the port hardware on the circuit pack.

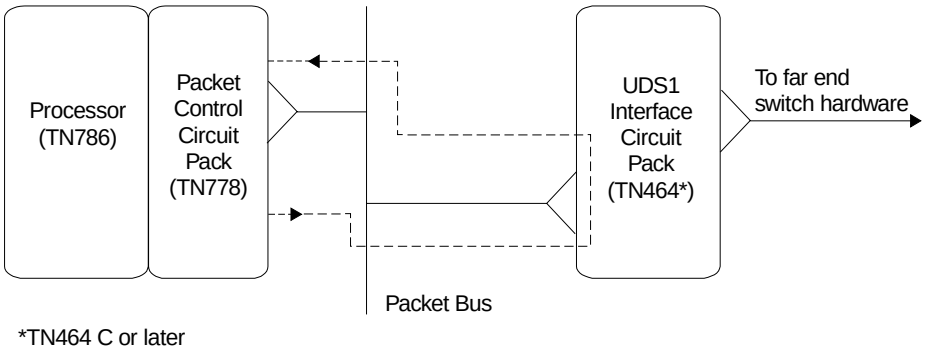

Figure 10-38. Signaling Port Packet Bus (LAN) Loopback

Table 10-347. TEST #939 Signaling Port Packet Bus Loopback

Error Code	Test Result	Description/Recommendation
1015	ABORT	The port is not in the out-of-service state. Use the **busyout port PCSSpp** command to place it in the out-of-service state and repeat this test **CAUTION:** *The **busyout** will prevent new call originations on all B-channels in the signaling group until the port is released.*
1139	ABORT	The Packet Bus in this port network is out of service. 1. Follow repair procedures for the Packet Bus 2. Enter **test port PCSSpp long** and check the results of this test (939).
1141	ABORT	The Packet Control circuit pack is out of service. 1. Follow the repair procedures for PKT-CTRL. 2. Enter **test port PCSSpp long** and check the results of this test (939).

Continued on next page

Table 10-347. TEST #939 Signaling Port Packet Bus Loopback — *Continued*

Error Code	Test Result	Description/Recommendation
1144	ABORT	The Packet Bus in the PPN is out of service. 1. Follow the repair procedures for the Packet Bus. 2. Enter **test port PCSSpp long** and check the results of this test (939).
2012	ABORT	Internal system error
2100	ABORT	Could not allocate the necessary system resources to run this test 1. Retry the command at 1-minute intervals a maximum of 5 times.
	FAIL	The Loopback test has failed. 1. If this test fails repeatedly wait until all of the ports on the board are idle (not in use) and reset the circuit pack. To reset the circuit pack enter the commands **busyout board PCSS** and **reset PCSS**. 2. Repeat the test, and if the test continues to fail replace the circuit pack.
	PASS	1. Connectivity of the D-channel over the Packet Bus is operational.

ISDN-SGR (ISDN-PRI Signaling Group)

MO Name (in Alarm Log)	Alarm Level	Initial Command to Run[1]	Full Name of MO
ISDN-SGR	MINOR	test sig-group <group>	ISDN-PRI Signaling Group
ISDN-SGR	WARNING	test sig-group <group>	ISDN-PRI Signaling Group

1 Where <group> is a number 1-8 and the test sequence can be either s (short) or l (long).

An ISDN-PRI Signaling Group is a collection of DS1/UDS1 ISDN Trunks or PRI endpoint ports (B-channels) for which a given ISDN-PRI Signaling Link Port (D-channel) carries signaling information. ISDN-PRI requires the use of one of the following DS1 interface circuit packs:

TN767	24-channel with ISDN-PRI D-channel over PI-BD
TN464B	32-channel with ISDN-PRI D-channel over PI-BD
TN464C or later	24- or 32-channel with ISDN-PRI D-channel over PI-BD or PKT-CTRL (PACCON)

See DS1-BD and UDS1-BD Maintenance documentation for a description of these circuit packs. See *DS1/CEPT1/ISDN-PRI Reference*, 55-025-101, for more information on ISDN.

NOTE:
If a ISDN-PRI over PACCON (Packet Control Circuit pack) is to be used then only the TN464C or later may be used for the D-channel Signaling.

For 24 channel interfaces, the first 23 ports on the circuit pack are used as B-channels. The 24th port may be used as a B-channel or as a D-channel depending on the type of Signaling Group used, as described below.

For 32 channel interfaces, ports 1-15 and 17-31 on the circuit pack are used as B-channels. The 16th port may be used as a B-channel or as a D-channel depending on the type of Signaling Group used, as described below.

There are two types of Signaling Groups:

- Facility Associated Signaling (FAS) (supported by all country protocols)
- Non-Facility Associated Signaling (NFAS) (supported by country protocol 1 only)

The figures following this discussion illustrate each of the configurations.

In an FAS Signaling Group, the 24th port of the DS1 Interface circuit pack (for 24 channel interfaces) or the 16th port of the DS1 Interface circuit pack (for 32 channel interfaces) is always the D-channel that carries signaling information for the other ports (B-channels) on the circuit pack. If a Packet Control circuit pack is used then only the TN464C or later circuit pack may be used.

In an NFAS Signaling Group, the 24th port of a DS1 Interface circuit pack (for 24 channel interfaces) or the 16th port of a DS1 Interface circuit pack (for 32 channel interfaces) is administered as a D-channel. The D-channel carries signaling information for the other ports (B-channels) on that circuit pack. That D-channel can also carry signaling information for any of the ports on other DS1 Interface circuit packs in the NFAS Signaling Group. As a result, the 24th port on other 24-channel DS1 Interface circuit packs and the 16th port on other 32-channel DS1 Interface circuit packs can be used as B-channels. A D-channel in an NFAS Group can signal for B-channels on a total of 20 DS1 Interface circuit packs. This configuration is known as NFAS Simplex. If a Packet Control circuit pack is used then only the TN464C or later circuit pack may be used to carry the D-channel, however other DS1/UDS1 interface circuit packs may be used to carry only B-channels.

In addition to NFAS Simplex, there is another type of NFAS Group called NFAS Duplex. This provides the user with more reliability, which is desirable because NFAS permits the D-channel to signal for so many B-channels. NFAS Duplex allows the administration of a backup D-channel, which remains in a Standby state until the Active D-channel goes down. If the Active D-channel does go down, the backup D-channel takes over and provides signaling for all the B-channels in the signaling group. In the case that a Packet Control circuit pack is used then only the TN464C or later may be used to carry the D-channels. B-channels may be carried by any DS1/UDS1 interfaces.

The ISDN-PRI Signaling Group itself depends on three other entities: the DS1 Interface circuit pack on which the D-channel(s) resides, the ISDN-PRI Signaling Link Port(s), and the interface link that provides connectivity to the processor (either the Processor Interface Link or the Packet Control circuit pack). If there are any problems with the ISDN-PRI Signaling Group, also investigate the ISDN-PRI Signaling Link Port(s), the DS1 Interface circuit pack(s), and either the Processor Interface Link or the Packet Control circuit pack.

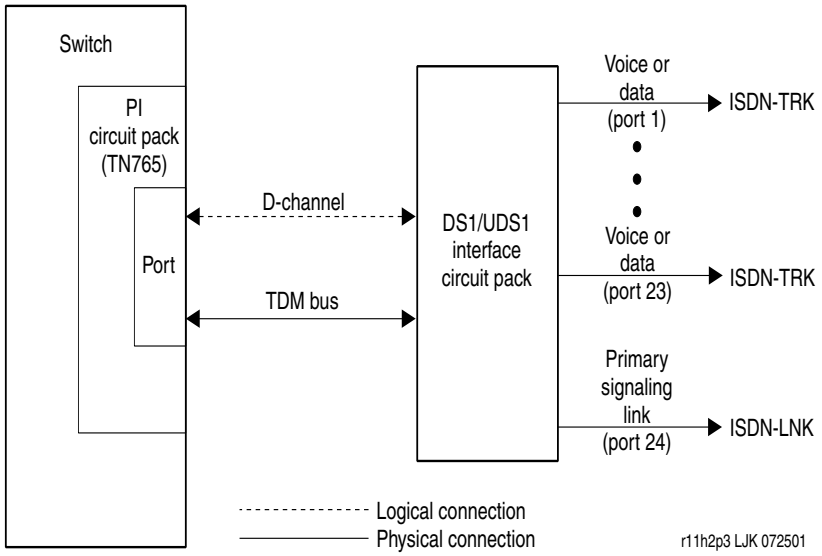

Figure 10-39. FAS ISDN-PRI Signaling Group (24 Channel) over Processor Interface

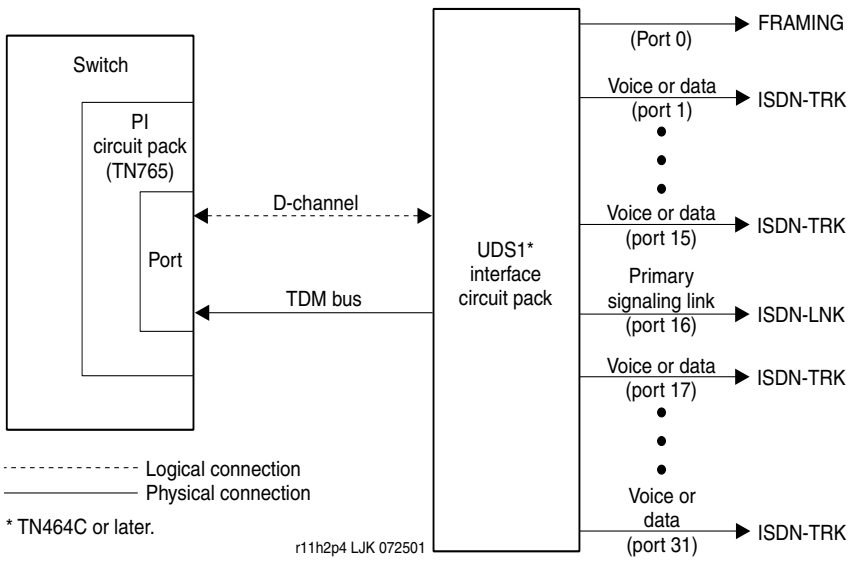

Figure 10-40. FAS ISDN-PRI Signaling Group (32 Channel) over Processor Interface

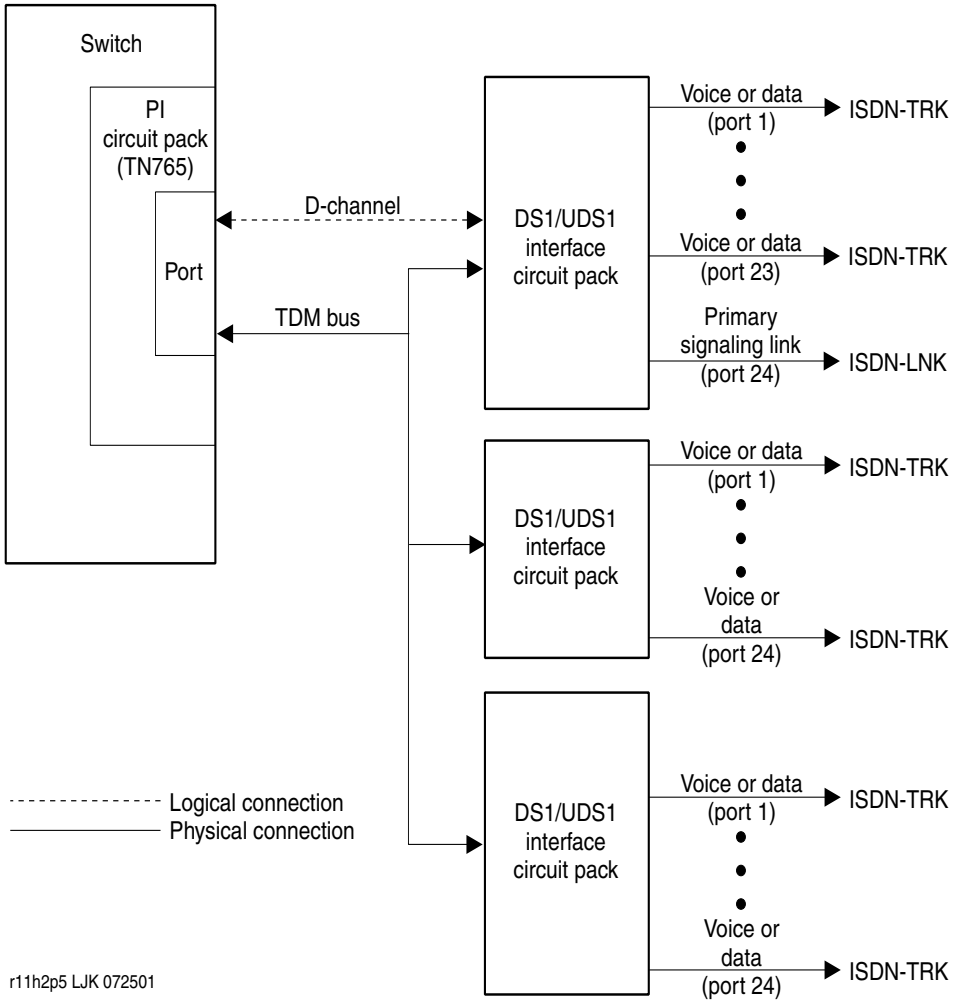

Figure 10-41. NFAS Simplex ISDN-PRI Signaling Group (24 Channel) over Processor Interface

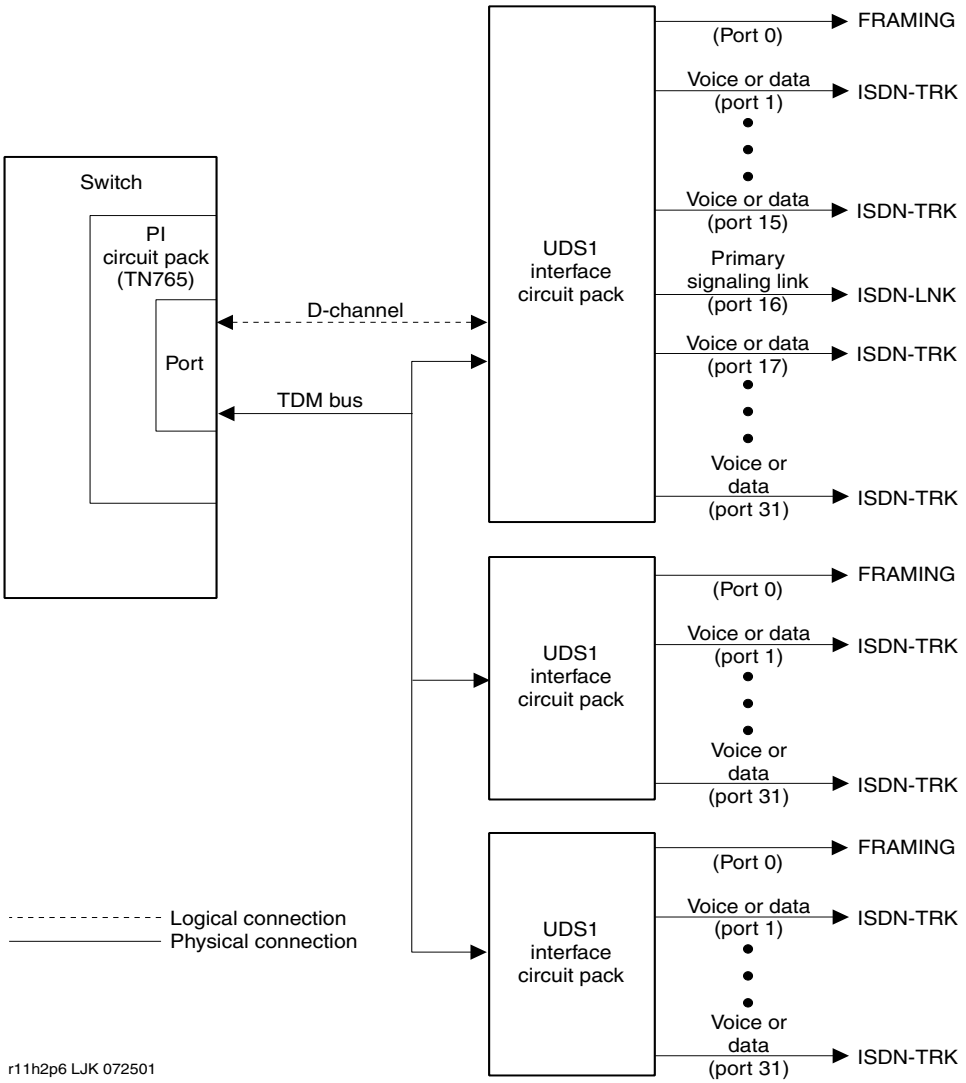

Figure 10-42. NFAS Simplex ISDN-PRI Signaling Group (32 Channel) over Processor Interface

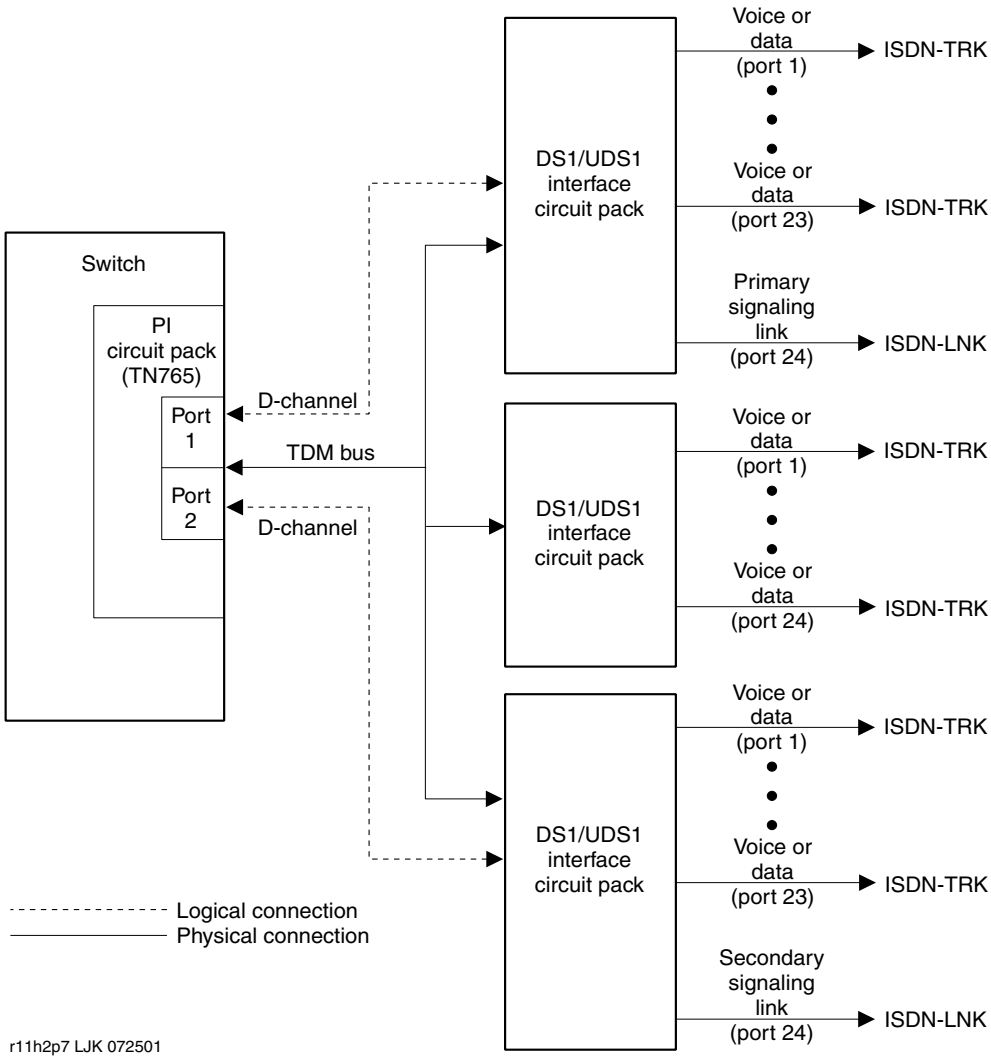

Figure 10-43. NFAS Duplex ISDN-PRI Signaling Group (24 Channel) over Processor Interface

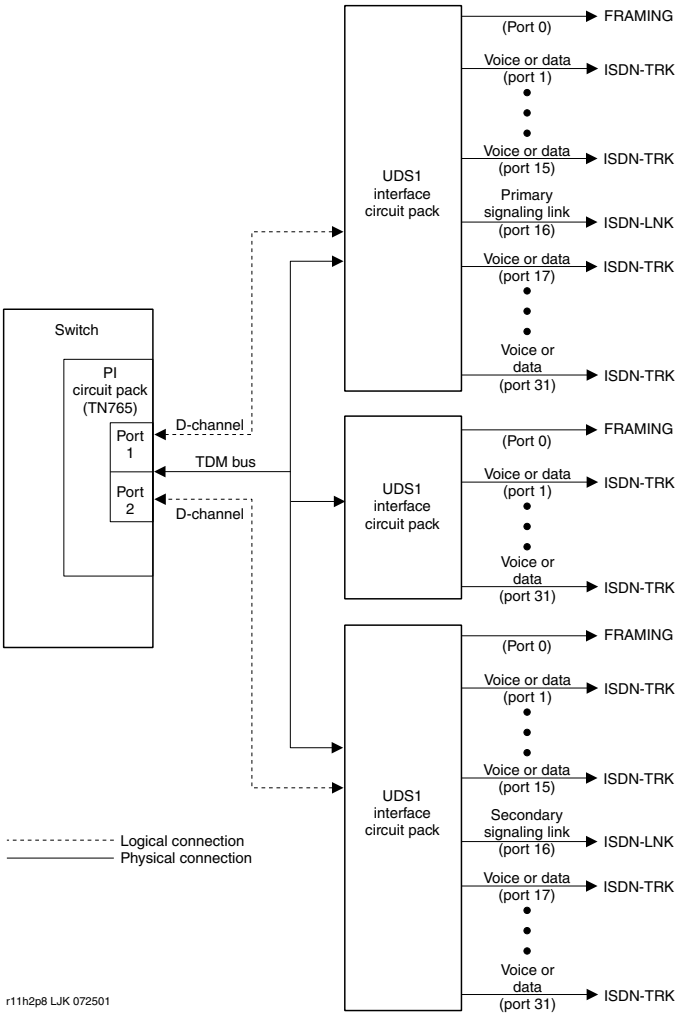

Figure 10-44. NFAS Duplex ISDN-PRI Signaling Group (32 Channel) over Processor Interface

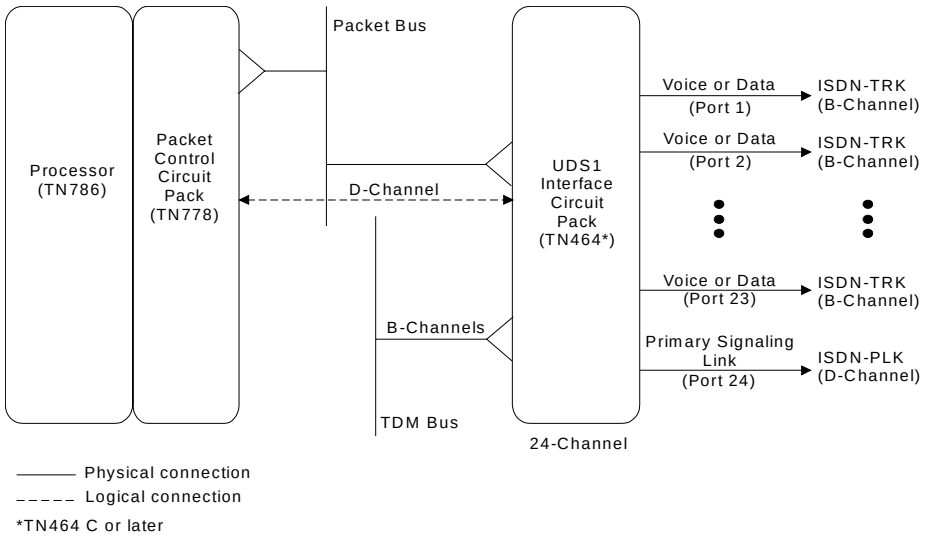

Figure 10-45. FAS ISDN-PRI Over PACCON Signaling Group (24 Channel)

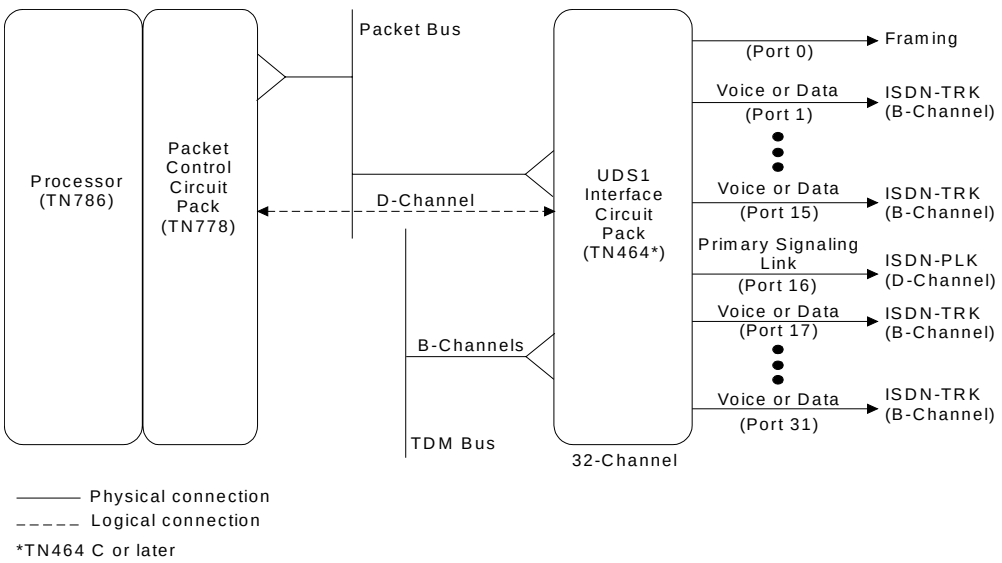

Figure 10-46. FAS ISDN-PRI Over PACCON Signaling Group (32 Channel)

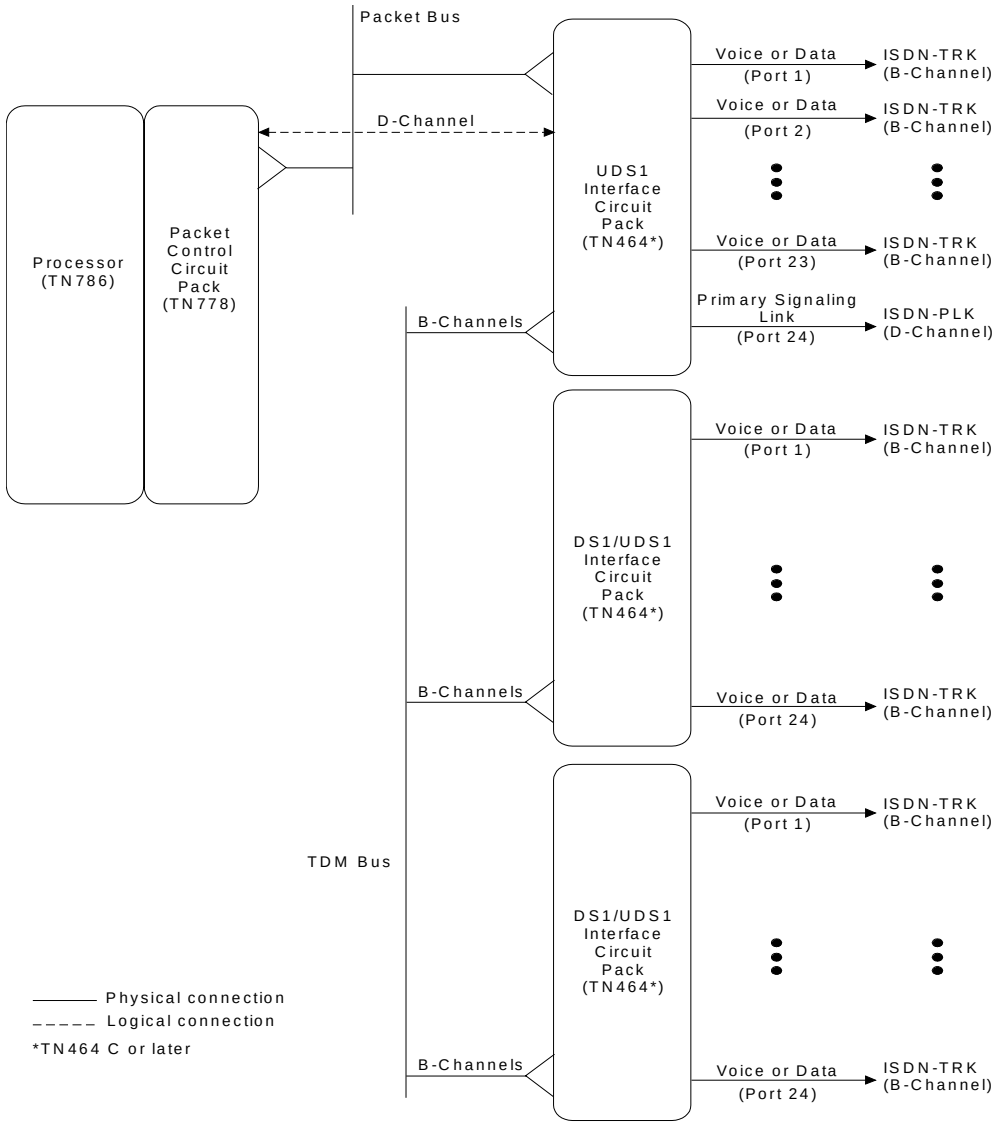

Figure 10-47. NFAS Simplex ISDN-PRI Over PACCON Signaling Group (24 Channel)

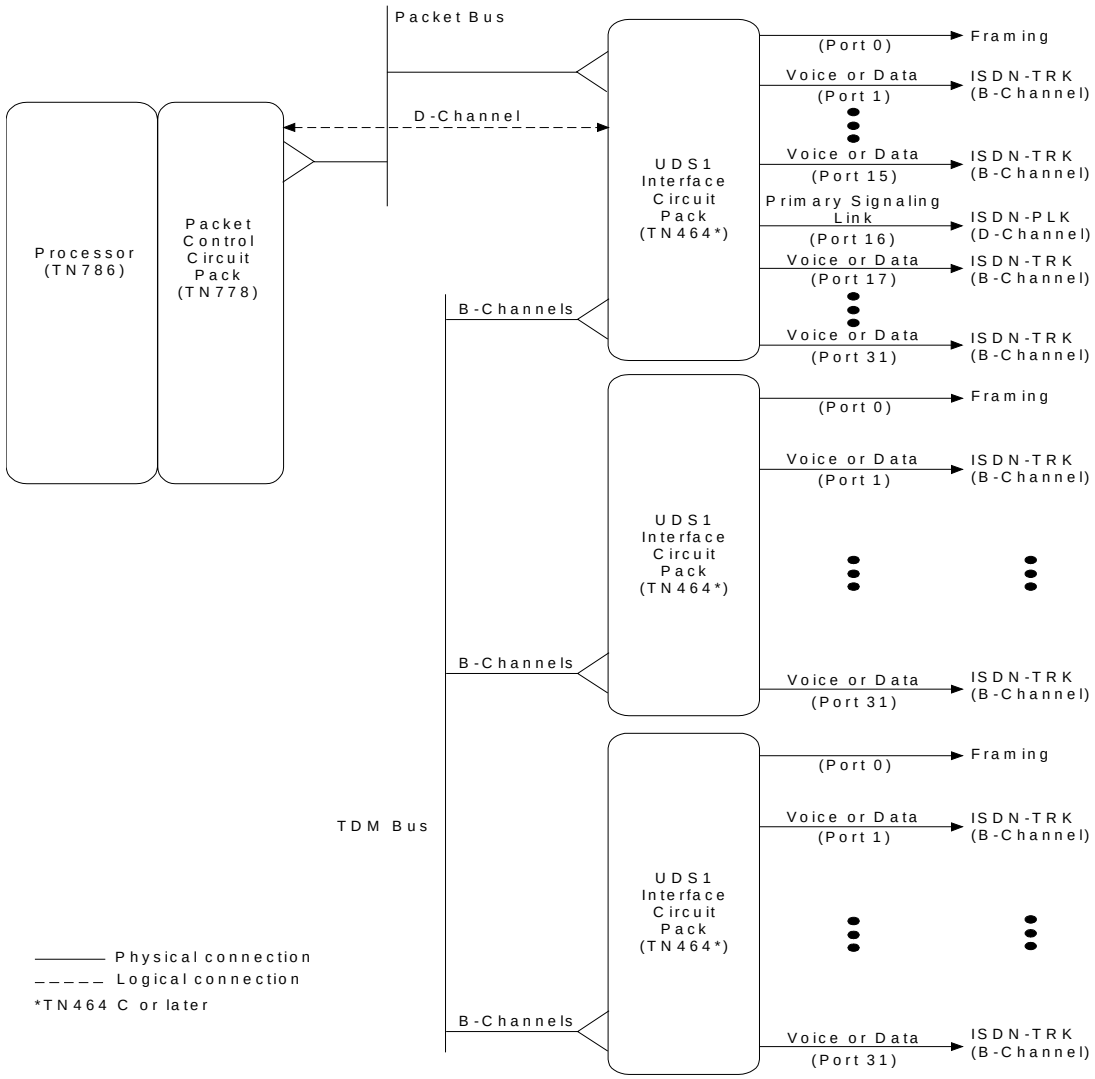

Figure 10-48. NFAS Simplex ISDN-PRI Over PACCON Signaling Group (32 Channel)

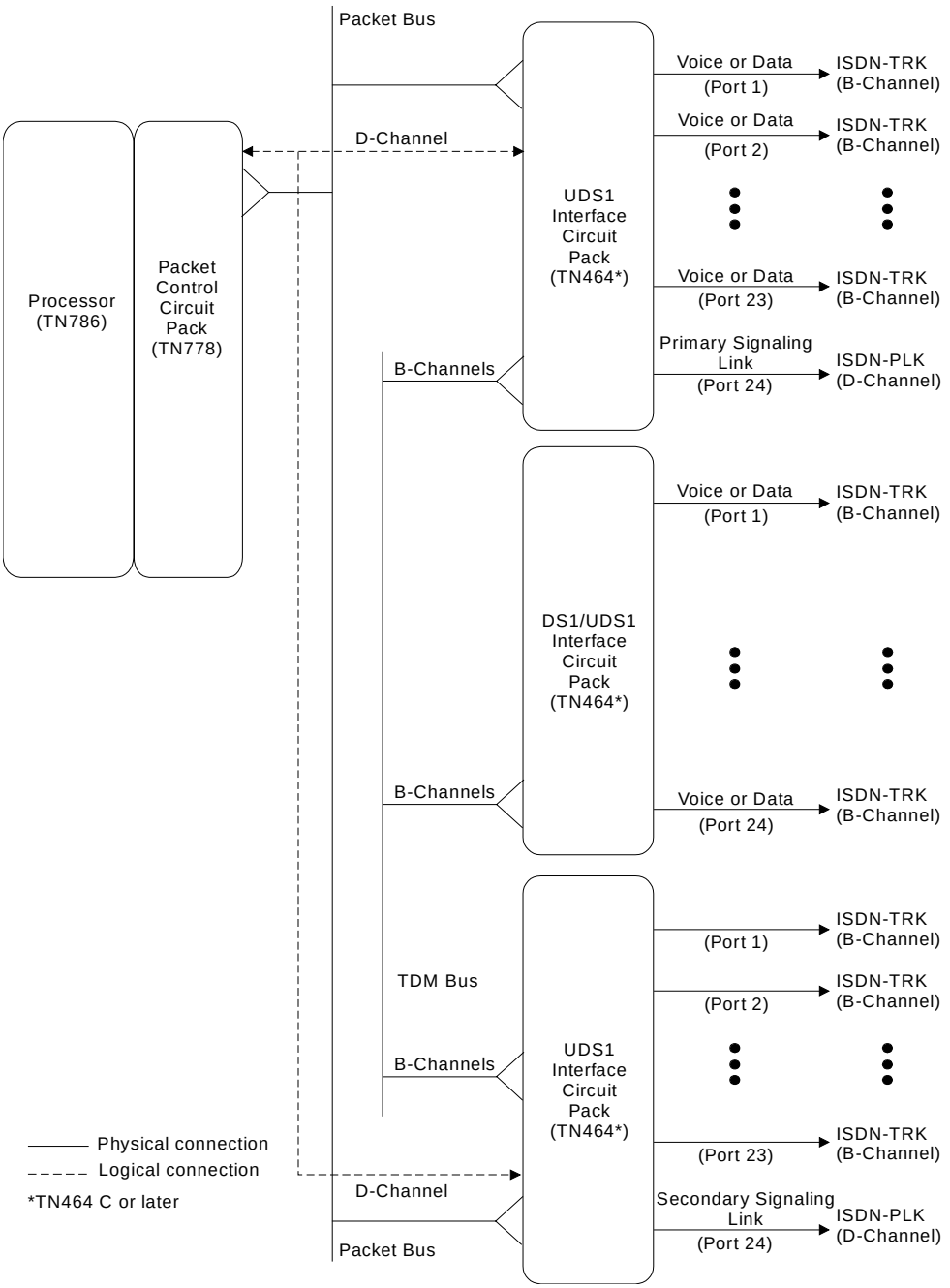

Figure 10-49. NFAS Duplex ISDN-PRI Over PACCON Signaling Group (24 Channel)

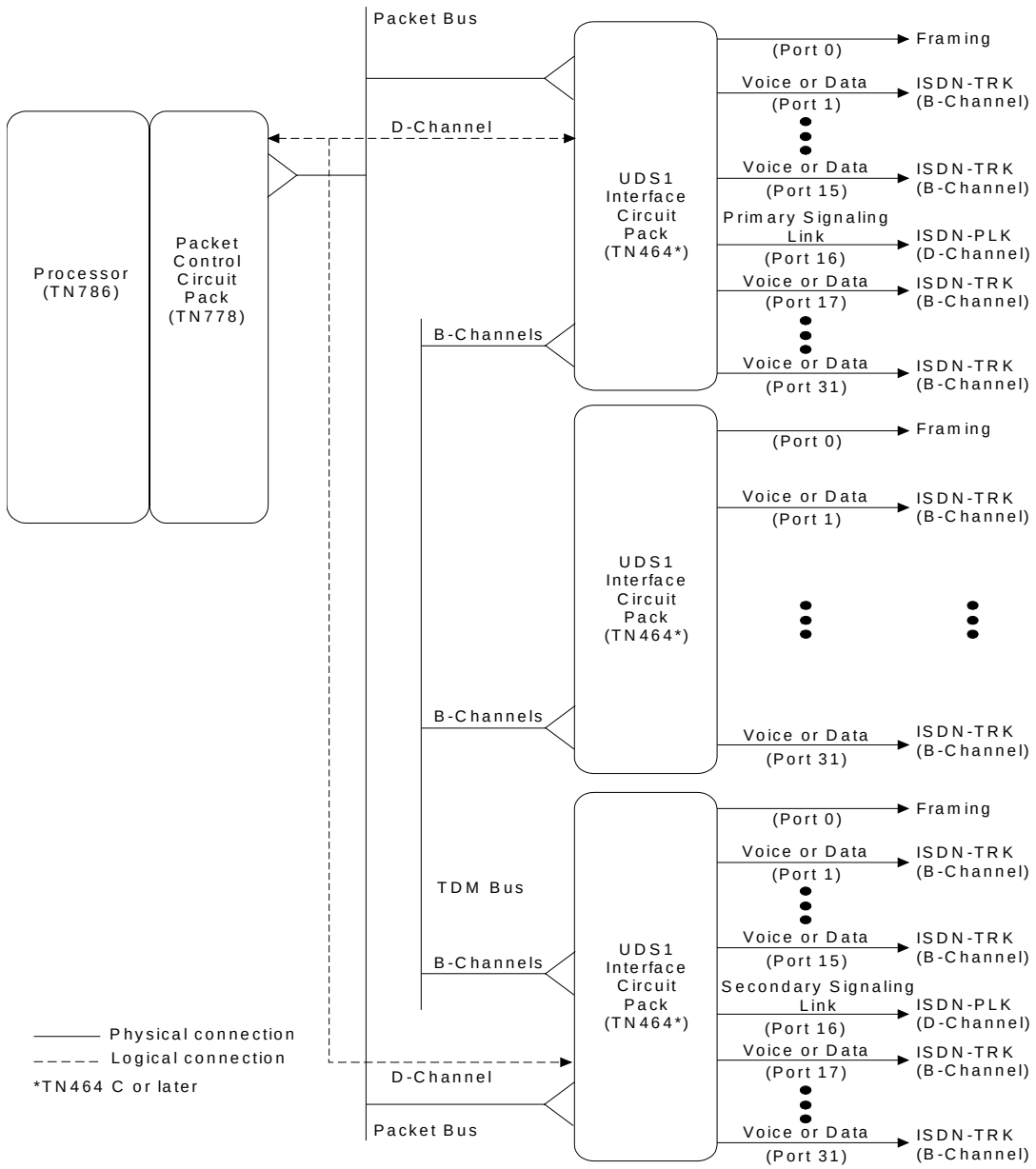

Figure 10-50. NFAS Duplex ISDN-PRI Over PACCON Signaling Group (32 Channel)

Error Log Entries and Test to Clear Values

Table 10-348. ISDN-PRI Signaling Group Error Log Entries

Error Codes	Aux Data	Associated Test	Alarm Level	On/Off Board	Test to Clear Value
0[1]	0	Any	Any		test sig-group <group>
1 (a)	Any	none			
257 (b)	Any	none			test sig-group <group>
513 (c)	Any	none			test sig-group <group>
769	Any	Primary Signaling Link Hardware Check (#636)			test sig-group <group>
1025	Any	Secondary Signaling Link Hardware Check (#639)			test sig-group <group>
1793 (d)	Any	Layer 2 Status (Test #647)	WARNING	OFF	test sig-group <group>
2049 (e)	Any	Layer 2 Status (Test #647)	WARNING	OFF	test sig-group <group>
2305 (f)	Any	Remote Layer 3 Query (Test #637)	MINOR	OFF	test sig-group <group>
3585 (g)	port number	none			none
3842-3942 (h)	port number				none

1 Run the Short or Long Test Sequence. Refer to the appropriate test description and follow the recommended procedures.

Notes:

a. This switch sent a message to the far-end switch or terminal adapter, and the far-end did not respond in the allotted time. Possible causes include link failure and congestion or outage at the far-end. The Aux Data field contains Layer 3 protocol information used by internal counters.

   If no other symptoms are not present, no action is required. If Layer 3 communication is down, there should be indications in the form of alarms and errors for link components. Check out other errors against ISDN-SGR, ISDN-TRK, and other hardware components on the link.

   There is no test to clear these errors. The error counter is decremented by 1 every 15 minutes.

b. This error indicates that the primary signaling channel connection has been lost for more than 90 seconds. If a secondary signaling channel does not exist or is not in-service, the associated B-channels will be placed in the ISDN Maintenance/Far-End state. The B-channels will not be usable for outgoing calls, although incoming calls will still be accepted. The switch will automatically attempt to recover the signaling link. Pay particular attention to the results of Test #636 (Primary Signaling Link Hardware Check) in the test sequence. When the link does recover, the B-channels will be negotiated back to the In-Service state and their alarms will be retired.

   When this error occurs, the state of the Signaling Group is changed to out-of-service (verify using the **status sig-group** command).

c. This error indicates that the secondary signaling channel connection has been lost for more than 90 seconds. If the primary signaling channel is not in-service, B-channels will be placed in the ISDN Maintenance/Far-End state. The B-channels will not be usable for outgoing calls, although incoming calls will still be accepted. The switch will automatically attempt to recover the signaling link. Pay particular attention to the results of Test #639 (Secondary Signaling Link Hardware Check) in the test sequence. When the link does recover, the B-channels will be negotiated back to the In-Service state and their alarms will be retired.

   When this error occurs, the state of the Signaling Group is changed to out-of-service (verify using the **status sig-group** command).

d. This error indicates a failure of the Layer 2 Status Query Test for the primary signaling channel

e. This error indicates a failure of the Layer 2 Status Query Test for the secondary signaling channel.

f. A specific message was sent to the far-end switch, and it did not respond within the allotted time. Investigate elements of the ISDN PRI D-channel(s) (ISDN-LNK, ISDN-PLK, ISDN-SGRP, PI-LINK, PI-PT, PKT-CTRL) for both this switch and the Far-end switch. If Test #637 fails twice in a row, the B-channels will be alarmed and made unavailable for outgoing calls (although incoming calls will still be accepted). When Test #637 succeeds and the Far-end switch starts responding properly, the DS1 ISDN Trunk (B-channels) will be placed back into normal operation and their alarms will be retired.

g. A SERV or SERV ACK ISDN D-channel message has been received by a non-US-type interface (country option other than `1` on the DS1 administration form). However, these messages are used only for duplex NFAS signaling which is supported only by country protocol 1.

   Thus, there may be a mismatch in administration between the local and far-end switches. Consult with the customer’s network provider to determine whether the D-channel is set up correctly on the far-end switch.

h. These error codes are used to report certain error messages received by the ISDN-PRI Signaling Group for one of its associated B-channels. The aux data field shows for which B-channel (port number) the message was received.

The error code generated equals 3840+*x*, where *x* is a Cause Value defined by the ISDN PRI Specification. Note that there is no Test to Clear Value for these error types; selected ISDN cause values are placed in the log when they are received, but no direct action or alarming is performed solely in response to receiving them. They provide added data that may prove useful when tracking down obscure networking and routing problems. The following table provides more information:

Table 10-349. Descriptions of Error Codes 3842-3942

Error Code	Description	Recommendation
3842	A request has been made to use a transit network or common carrier that cannot be accessed.	1. From the circuit pack and port number (in the Aux Data field), determine the trunk group against which the error was reported. 2. Check all routing patterns containing this trunk group for validity of interexchange carriers requested (IXC field).
3843	No route to destination. Request received to route call through a transit network that is recognized but not allowed to carry the call or not able to serve the destination.	

Continued on next page

Table 10-349. Descriptions of Error Codes 3842-3942 — *Continued*

Error Code	Description	Recommendation
3846	The far-end switch has indicated that the B-channel (trunk) is not acceptable for use in the call for which it was requested.	This could indicate an administration problem (for example, the local switch and the far-end switch have different B-channels administered), or could reflect the occurrence of a normal race condition (for example, the local switch has requested use of a B-channel which the far-end switch had just reserved for use on another call). 1. From the circuit pack and port number (in the Aux Data field), determine the trunk group against which the error was reported. 2. Issue the **status trunk** command for the indicated trunk. 3. Refer to the “DS1 ISDN Trunk Service States” and “ISDN-PRI Trunk Service States” sections of ISDN-TRK for recovery suggestions.
3858	The switch sent an ISDN message to the far-end switch or terminal adapter which did not respond in the allotted time.	Possible causes include link failure and congestion or outage at the far-end.
3878	The far-end switch has indicated that the network is not functioning correctly and that the condition may last a relatively long period of time (for example, immediately re-attempting the call may not be successful).	1. From the circuit pack and port number (in the Aux Data field, determine the trunk group against which the error was reported. 2. Consult with the network provider to determine the nature and expected duration of the out of service condition. 3. Consider modifying all routing patterns containing this trunk group, to route calls around the network which is out of service.

Continued on next page

Table 10-349. Descriptions of Error Codes 3842-3942 — *Continued*

Error Code	Description	Recommendation
3890	A request to use a network service (e.g., SDN) has been denied. Administration somewhere on the network has indicated that the requested service has not been subscribed to or purchased for this trunk.	This could be a local administration problem only, or a mismatch between the local administration and that of the network provider. 1. From the circuit pack and port number (in the Aux Data field), determine the trunk group against which the error was reported. 2. Display the trunk group form: If the trunk group is Call-by-Call (Service Type is “cbc”), check all routing pattern forms containing this trunk group to see if the Service/Feature fields contain the correct network services purchased for this trunk. If the trunk group is not Call-by-Call, check that the Service Type field contains the single network service purchased for this trunk. 3. If local administration appears correct, consult with the customer and/or the network provider to determine the services that the customer has subscribed to for this trunk group.
3892	Protocol detail; may offer a clue if customer is having ISDN calls denied with an unexpected intercept tone.	If customer is complaining of unexpected intercept tones when accessing ISDN trunks or PRI endpoints and no other cause can be found, provide the next tier with this Error Log information.
3894	Protocol detail; may offer a clue if customer is having ISDN calls denied with an unexpected intercept tone.	First, eliminate any transitory state mismatch problems by issuing the **test port PCSSpp** command for the trunk port shown in the aux data field. Test #256 (Service State Audit) is the important test in the sequence. If this passes satisfactorily, yet the customer continues to complain of unexpected intercept tones when accessing ISDN trunks or PRI endpoints and no other cause can be found, provide the next tier with this Error Log information.
3902	FRANCE ONLY: Service not authorized.	

Continued on next page

Table 10-349. Descriptions of Error Codes 3842-3942 — *Continued*

Error Code	Description	Recommendation
3903	Service or option not available, unspecified. This cause is used to report a service or option not available event only when no other cause in the service or option not available class applies.	
3905	Protocol detail; may offer a clue if customer is having ISDN calls denied with an unexpected intercept tone.	If customer is complaining of unexpected intercept tones when accessing ISDN trunks or PRI endpoints and no other cause can be found, provide the next tier with this Error Log information.
3906	Protocol detail; may offer a clue if customer is having ISDN calls denied with an unexpected intercept tone.	If customer is complaining of unexpected intercept tones when accessing ISDN trunks or PRI endpoints and no other cause can be found, provide the next tier with this Error Log information.
3909	A request to use a network service has been made, but the network has rejected the request because the requested service is not implemented.	Follow the recommendations listed above for error type 3890.
3910	Only restricted digital BC available.	
3919	Service or option not implemented, unspecified. Used when no other cause in this class applies.	

Continued on next page

Table 10-349. Descriptions of Error Codes 3842-3942 — *Continued*

Error Code	Description	Recommendation
3928	A call was denied because of a basic incompatibility between the type of call and either the facilities selected by the routing pattern or the called user itself.	This error might be helpful as a clue if the customer complains of receiving unexpected intercept tone after accessing ISDN trunks or PRI endpoints. Determine the trunk group from the circuit pack and port number (in the aux data field) and then check the BCC fields of the pertinent routing patterns. Also, investigate whether or not the calling and called endpoints are compatible (for example, some ISDN switches may not allow a voice station to call a data extension).
3942	Timer expiry: T310 time-out, no answer to CALL PROCEEDING.	

System Technician-Demanded Tests: Descriptions and Error Codes

Always investigate tests in the order presented in the table below. By clearing error codes associated with the *Primary Signaling Link Hardware Check*, for example, you may also clear errors generated from other tests in the testing sequence.

Order of Investigation	Short Test Sequence	Long Test Sequence	D/ ND[1]
Primary Signaling Link Hardware Check (#636)	X	X	ND
Secondary Signaling Link Hardware Check (#639)	X	X	ND
Layer 2 Query Test (#647)	X	X	ND
Remote Layer 3 Query Test (#637)	X	X	ND

1 D = Destructive; ND = Nondestructive

Primary Signaling Link Hardware Check (#636)

The ISDN-PRI Signaling Link Port itself depends on the health of the DS1/UDS1 Interface circuit pack on which it resides. This test will fail if there are problems with either the ISDN-PRI Primary D-channel port or the DS1/UDS1 circuit pack. The ISDN-PRI Primary D-channel also depends on the health of either the Processor Interface Link or the Processor Control circuit pack providing connectivity to the DS1/UDS1 circuit pack.

If there are problems with the ISDN-PRI Signaling Link, also investigate the DS1/UDS1 circuit pack (DS1-BD/UDS1-BD) and the Processor Interface Link or Packet Control (PI-LINK/PACCON) dependent upon which is used

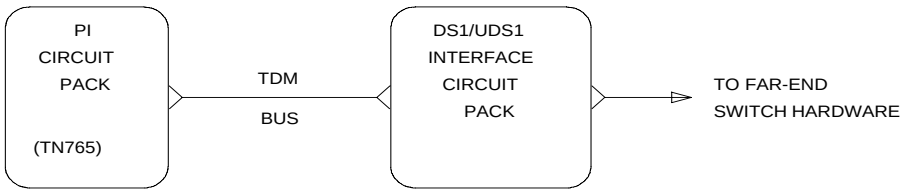

Figure 10-51. Primary Signaling Link Hardware Check (Test #636)

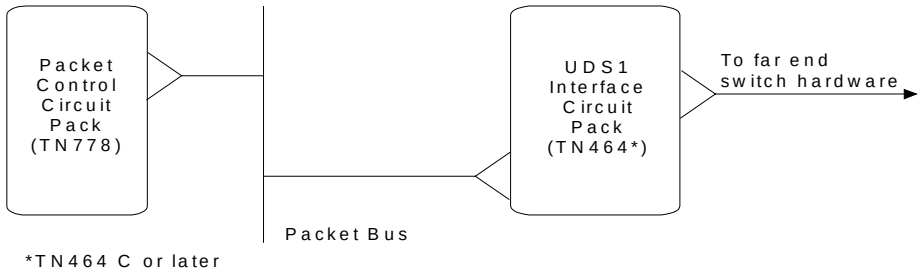

Figure 10-52. PRI over PACCON Primary Signaling Link Hardware Check (Test #636)

Table 10-350. TEST #636 Primary Signaling Link Hardware Check

Error Code	Test Result	Description/Recommendation
	ABORT	Internal system error 1. Retry the command at 1-minute intervals a maximum of 5 times.
1700	ABORT	Rollabout video abort. The PRI terminal adapter associated with this D-channel port is detached from the circuit pack. This is a normal abort when the rollabout video feature is enabled. To complete test on this port, either: 1. Re-attach the disconnected PRI terminal adapter and retry test command, or 2. Disable the rollabout video feature on this circuit pack by entering **change ds1 PCSS** and set the field **"Alarm when PRI Endpoint Detached?"** to **"y"**.
4	FAIL	There is a problem with the Processor Interface Link. No DS1 ISDN Trunk (B-channel) or wideband PRI Endpoint calls can be made until the problem is resolved. 1. Display the Communication-Interface Links Form via the to determine which link is down (find the one that matches the DS1 interface circuit pack this ISDN-PRI Signaling Link Port is on) and then consult the procedures for Processor Interface Link.
8	FAIL	There is a problem with the DS1/UDS1 Circuit Pack, or the ISDN-PRI Signaling Channel (D-channel). No DS1 ISDN Trunk (B-channel) or wideband PRI Endpoint calls can be made until the problem is resolved. 1. Consult the procedures for DS1/UDS1 Circuit Pack and the ISDN-PRI Signaling Channel (ISDN-LNK/ISDN-PLK).
	PASS	The basic physical connectivity of the primary D-channel is intact and functional. Try this test repeatedly to ensure the link is up and to uncover any transitory problems.

Remote Layer 3 Query (#637)

This test will query the far-end switch or terminal adapter to determine if the signaling connection is functioning properly at Layer 3. It will select a B-channel in the in-service or maintenance service state and send an ISDN Layer 3 SERVice message, which requires a response from the far end (similar to performing Test #256 on an ISDN trunk. The test will not be performed if there are no B-channels in an appropriate ISDN service state (as when none are administered or they are all out of service).

NOTE:
The service state can be displayed by using the **status trunk <trunk group/trunk member>** or **status pri-endpoint** command.

As is the case with Test #256 for an ISDN trunk, a PASS only indicates that a message was composed and sent to the far-end switch or terminal adapter. The ISDN PRI Specification allows up to 2 minutes for a response. Check the Error Log for ISDN-SGR (ISDN-PRI Signaling Group) errors of type 2305 for evidence of a Remote Layer 3 Query failure.

Tests #639 and #636 check the health of the D-channels and DS1/UDS1 Interface Circuit Packs. As shown in the figures below, Test #637 goes one step further by checking the communication path from the processor, through the Processor Interface or Packet Control circuit pack over the TDM or Packet Bus through the DS1/UDS1 Interface circuit pack, and on to the far-end switch or terminal adapter. A special ISDN message is sent to the far-end switch or terminal adapter, which must respond within a specified amount of time. This test is designed to ensure that the communication path between the switch and the far-end is up and operational, and that the two endpoints can properly exchange ISDN control messages.

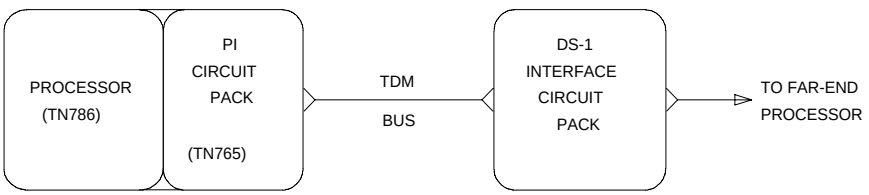

Figure 10-53. Remote Layer 3 Query (Test #637)

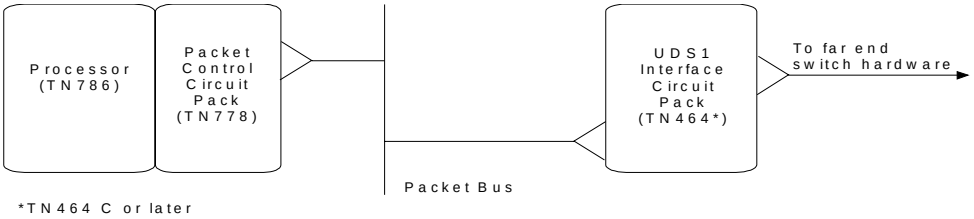

Figure 10-54. PRI Over PACON Remote Layer 3 Query (Test #637)

Table 10-351. TEST #637 Remote Layer 3 Query

Error Code	Test Result	Description/Recommendation
	ABORT	Internal system error 1. Retry the command at 1-minute intervals a maximum of 5 times.
1006	ABORT	This is a NORMAL ABORT. For country protocol 1 interfaces (including the USA), either there are no B-channels administered in this signaling group, or all B-channels in this signaling group are either out-of-service or are in a “pending” state (PINS or PMTC, indicating that a B-channel maintenance message for that B-channel has been sent and not yet acknowledged). 1. Administer an ISDN Trunk or PRI Endpoint Port (B-channel) in this signaling group, or use the **status trunk TRK-GRP/TRK** or **status pri-endpoint <extension>** command to check the state of the ISDN Trunks or PRI Endpoint Ports associated with this signaling group. Refer to ISDN-TRK or PE-BCHL for further details regarding service state definitions and transitions. For systems not using country protocol 1 interfaces, there are no B-channels administered in this signaling group.
1019	ABORT	There is already a Remote Layer 3 Query in progress. This is a normal ABORT. 1. Wait two minutes, then follow the procedures for when this test passes.
1113	ABORT	The Signaling Link is down. Therefore no messages can be sent to the Far-end switch. 1. Examine the results of Tests #636 and #639 and follow recommendations provided there. 2. If either test passes, it may be because the signaling link was disabled by system technician. Verify this by using the **display comm link** command. Tests #636 and #639 pass if the signaling link is not enabled.
2100	ABORT	Could not allocate the necessary system resources to run this test. 1. Retry the command at 1-minute intervals a maximum of 5 times.

Continued on next page

Table 10-351. TEST #637 Remote Layer 3 Query — *Continued*

Error Code	Test Result	Description/Recommendation
2500	ABORT	Same as ABORT with no error code. 1. Follow the recommendations for ABORT with no error code.
2500	FAIL	Same as ABORT with no error code. 1. Follow the recommendations for ABORT with no error code.
	PASS	A message was composed and sent to the Far-end switch. The ISDN PRI specification allows up to two minutes for a reply. 1. Check the Error Log for ISDN-SGR (ISDN-PRI Signaling Group) for errors of type 2305 for evidence of a Remote Layer 3 Query failure. If no new errors were logged since this test was run, then this switch and the Far-end switch processor can exchange call control messages. 2. If there is still a problem with a particular DS1 ISDN Trunk or PRI Endpoint Port (B-channel), busyout the trunk or port and run the long test sequence, paying particular attention to the results of Test #258 (ISDN Test Call).

Secondary Signaling Link Hardware Check (#639)

The ISDN-PRI Signaling Group D-Channel port depends on the health of the DS1/UDS1 Interface circuit pack on which it resides. This test will fail if there are problems with either the ISDN-PRI Primary D-channel port or the DS1/ UDS1 circuit pack. If there are problems with the ISDN-PRI Secondary Signaling Channel port (ISDN-LNK or ISDN-PLK), also investigate the DS1/UDS1 circuit pack.

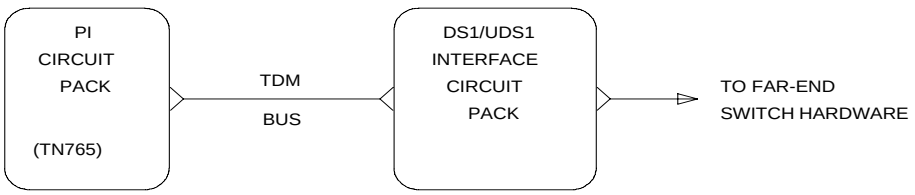

Figure 10-55. Secondary Signaling Link Hardware Check for PRI over PI (Test #639)

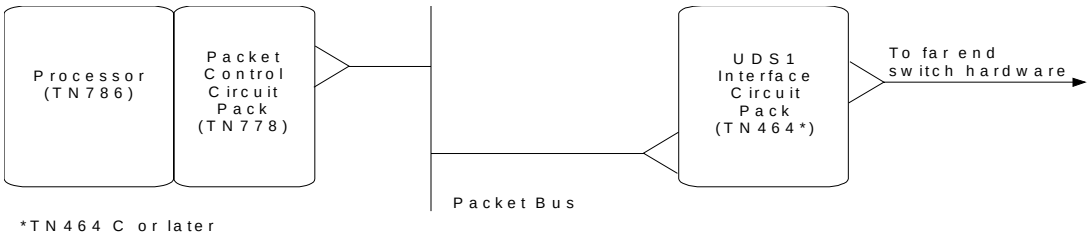

Figure 10-56. Secondary Signaling Link Hardware Check for PRI over PACCON (Test #639)

Table 10-352. TEST #639 Secondary Signaling Link Hardware Check

Error Code	Test Result	Description/Recommendation
	ABORT	Internal system error 1. Retry the command at 1minute intervals a maximum of 5 times.
1132	ABORT	The Secondary D-channel is not administered for this Signaling Group. This is a NORMAL ABORT. Only a Primary D-channel must be administered for a Signaling Group.
4	FAIL	There is a problem with the Processor Interface Link. No DS1 ISDN Trunk (B-channel) or Wideband PRI Endpoint calls can be made until the problem is resolved. 1. Display the Communication-Interface Links Form via **display communication-interface** to determine which link is down (find the one that matches the DS1 Interface circuit pack on which this ISDN-PRI Signaling Link Port resides) and then refer to the PI-LINK Processor Interface Link Maintenance documentation.
8	FAIL	There is a problem with the DS1/UDS1 Interface circuit pack or the ISDN-PRI Secondary Signaling channel (D-channel). No ISDN Trunk (B-channel) or Wideband PRI Endpoint calls can be made until the problem is resolved. 1. Refer to the DS1/UDS1 circuit pack and the ISDN-PRI Signaling channel (ISDN-LNK/ISDN-PLK) Maintenance documentation.
	PASS	The basic physical connectivity of the Signaling Group's Secondary D-channel is intact and functional. Try this test repeatedly to ensure the link is up and to uncover any transitory problems.

Layer 2 Status Test (#647)

The Layer 2 Status Test checks the layer 2 status of the ISDN-PRI Signaling Channel (D-channel). This test will fail if there is a hardware failure or a facility problem, or if the primary and secondary ISDN-PRI D-channels are not administered correctly.

The Primary and Secondary Signaling Link Hardware tests (test 636 and 639) and the Remote Layer 3 Query test (test 637) will detect most problems caused by hardware failures or incorrect administration. However, the Layer 3 test (test 637) cannot detect end-to-end transmission problems with the Standby D-channel since Layer 3 messages are not sent on the standby channel.

For G3r, the SYS-LINK Maintenance Object reports Layer 2 ISDN-PRI D-channel problems and for G3i/s/vs, the PI-LINK Maintenance Object reports Layer 2 ISDN-PRI D-channel problems (if the D-channel is connected to the Processor Interface circuit pack). However, the PI-LINK Maintenance Object does not monitor the Layer 2 status of the ISDN-PRI D-channel when the D-channel is connected to the Packet Control circuit pack for the ISDN-PRI over PACCON feature. The Layer 2 Query test is provided to detect D-Channel Layer 2 failures and generate an associated Warning alarm independent of the hardware configuration used for the D-channels.

Table 10-353. TEST #647 Layer 2 Status Query Test

Error Code	Test Result	Description/Recommendation
1132	ABORT	Internal system error The port location for the primary ISDN-PRI D-channel is not known. This condition should not be possible since an administered DS1 circuit pack must be specified when a Signaling Group is administered: 1. Retry the command at 1-minute intervals a maximum of 5 times.
1134	ABORT	Internal system error The associated DS1 circuit pack is not administered. This condition should not be possible since an administered DS1 circuit pack must be specified when a Signaling Group is administered. 1. Retry the command at 1-minute intervals a maximum of 3 times.
2500	ABORT	Internal system error 1. Retry the command at 1-minute intervals a maximum of 5 times.

Continued on next page

Table 10-353. TEST #647 Layer 2 Status Query Test — *Continued*

Error Code	Test Result	Description/Recommendation
1	FAIL	Layer 2 of the primary signaling channel is down: 1. Examine the results of the Primary Signaling Link Hardware Test (#636) and follow recommendations provided there. 2. If test #636 passes, the Layer 2 Query test may still fail if the Signaling Channel at the far end has not been administered correctly or if it has been busied out. Verify that the Primary Signaling Channel (D-channel) at the far end has been administered correctly. Verify that the DS1 port used for the Primary D-channel has not been busied out at the far end.
2	FAIL	Layer 2 of the secondary signaling channel is down. 1. Examine the results of Secondary Signaling Link Hardware Test (#639) and follow recommendations provided there. 2. If tests #639 passes, the Layer 2 Query test may still fail if the Signaling Channel at the far end has not been administered correctly or if the Signaling Channel has been busied out. Verify that the Secondary Signaling Channel (D-channel) at the far end has been administered correctly. Verify that the DS1 port used for the Secondary D-channel has not been busied out at the far end.
3	FAIL	Both the primary and secondary Channels are down. 1. Examine the results of the Primary and Secondary Signaling Link Hardware Tests (#636 and #639) and follow recommendations provided there. 2. If tests #636 and #639 pass, the Layer 2 Query test may still fail if the Signaling Channels at the far end has not been administered correctly or if the Signaling Channels have been busied out. Verify that the Primary and Secondary Signaling Channel (D-channels) at the far end have been administered correctly. Verify that the DS1 ports used for the Primary and Secondary D-channels have not been busied out at the far end.
	PASS	The Primary Signaling Channel is up and, if administered the Secondary Channel is up.

ISDN-TRK (DS1 ISDN Trunk)

MO Name (in Alarm Log)	Alarm Level	Initial Command to Run	Full Name of MO
ISDN-TRK[1]	MAJOR[2]	test port PCSSpp l	DS1 ISDN Trunk
ISDN-TRK	MINOR	test port PCSSpp l	DS1 ISDN Trunk
ISDN-TRK	WARNING	test port PCSSpp sh	DS1 ISDN Trunk

1 For additional repair information, refer to the "DS1-BD (DS1 Interface Circuit Pack)" maintenance object.

2 A MAJOR alarm on a trunk indicates that alarms on these trunks are not downgraded by the **set options** command and that at least 75 percent of the trunks in this trunk group are alarmed.

A DS1 ISDN Trunk is known as a B-channel. It is a 64 kbps Bearer channel that can be used to transmit digital traffic, be it voice or data. These trunks use a separate channel for signaling (for example, for call setup); this mode of operation is known as out-of-band signaling, as opposed to in-band, robbed-bit signaling, where the signaling traffic flows over the same channel as the voice or data traffic. The separate signaling channel is called a D-channel in ISDN terminology, and it carries all the call control signaling messages for the DS1 ISDN Trunk B-channels. The D-channel for these B-channels is an ISDN-PRI (Primary Rate Interface) Signaling Link Port (ISDN-LNK/ISDN-PLK).

On 24-channel interfaces, any of the first 23 ports on the DS1/UDS1 interface circuit pack can be a B-channel. The 24th port may be used as a B-channel or as a D-channel depending on the type of ISDN-PRI Signaling Group (ISDN-SGR) to which it belongs. On 32 channel interfaces, any of ports 1-15 and 17-31 on the DS1 interface circuit pack can be a B-channel. The 16th port may be used as a B-channel or as a D-channel depending on the type of ISDN-PRI Signaling Group (ISDN-SGR) to which it belongs. For more details, refer to the ISDN-SGR and DS1-BD/UDS1-BD Maintenance documentation.

NOTE:
If a Packet Control circuit pack is used instead of a Processor Interface Link as the interface of the PBX SPE to the D-channel, then the signaling link port on the UDS1 circuit pack is referred to as ISDN-PLK and only the TN464C or later may be used to carry D-channel Signaling. The B-channels may be carried by any DS1/UDS1 interface circuit pack. If a Processor Interface is used for connectivity then the Signaling Link port is referred to as a ISDN-LNK and the TN767 or TN464B or later DS1 interface circuit pack may be used to carry D-channels Signaling.

For interfaces using country protocol 1 on the DS1 Circuit Pack administration form (including US), the signaling protocol used for the maintenance of the B-channel is defined by the AT&T ISDN-PRI Specification.

For interfaces using country protocols other than 1, the signaling protocol used for the maintenance of the B-channel is defined by the CCITT ISDN-PRI Specification.

There are five possible SERVICE STATES for a B-channel. The service state is negotiated with the far-end switch, changes over time, and may have a far-end or near-end component. The service state is initialized to Out-Of-Service/Far-End state and an attempt is made to negotiate it to In-Service.

NOTE:
The service state of a particular DS1 ISDN Trunk B-channel can be displayed by issuing the **status trunk <trunk_group/trunk_member>** system technician command.

If a call is present, the Specification defines the permissible CALL STATES as well. There are tests in the Short and Long Test Sequences for DS1 ISDN Trunk designed to audit these states and ensure agreement between both ends of the PRI connection.

Alarming Based on Service States

A warning alarm is logged against a DS1 ISDN B-channel trunk when it is placed in the Maintenance/Far-End or Out-Of-Service/Far-End states, during which the trunk is unusable for outgoing calls. When a warning alarm is present, use **status trunk group#/member#** to determine the exact state. Other alarms can be diagnosed by using the short and/or long test sequences. Note that an ISDN B-channel trunk can be placed in a Far-End service state by either action taken by the far-end switch or by failure of the far-end switch to respond. For example, if the far-end does not respond to a Remote Layer 3 Query (Test #637 for ISDN-SGR), the associated DS1 ISDN trunk B-channels will be placed in the Maintenance/Far-End service state.

As a port on a DS1 circuit pack (DS1-BD or UDS1-BD), and as part of a signaling group dependent on a D-channel (ISDN-LNK/ISDN-PLK) for signaling, operation of the ISDN-TRK is dependent on the health of these other maintenance objects. The ISDN D-channel in turn depends on the Packet Bus (PKT-BUS)/Processor Interface Link (PI-LINK) (dependent on setup) for transmission through the system. Keep this hierarchy of dependencies in mind when diagnosing problems.

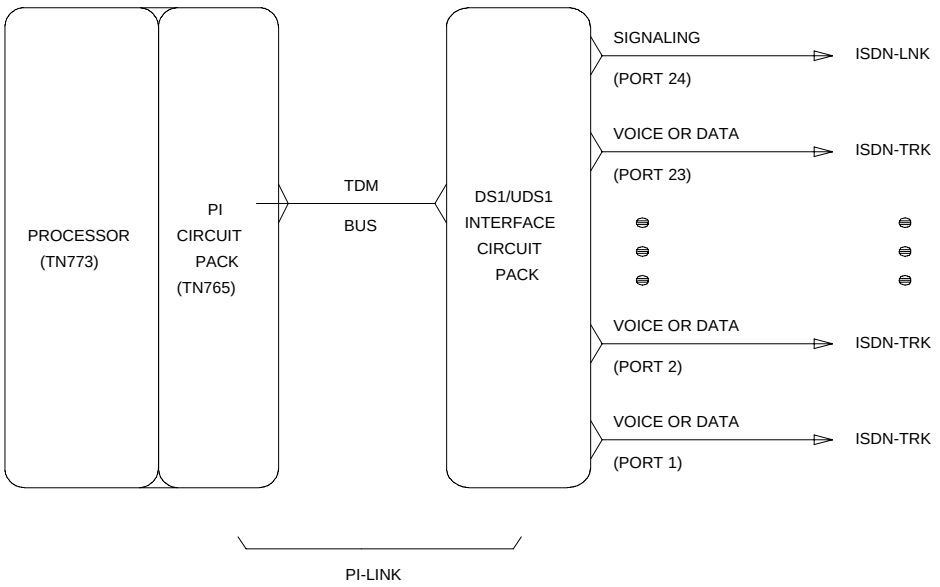

Figure 10-57. DS1 ISDN Trunk Interactions (24-channel interface)

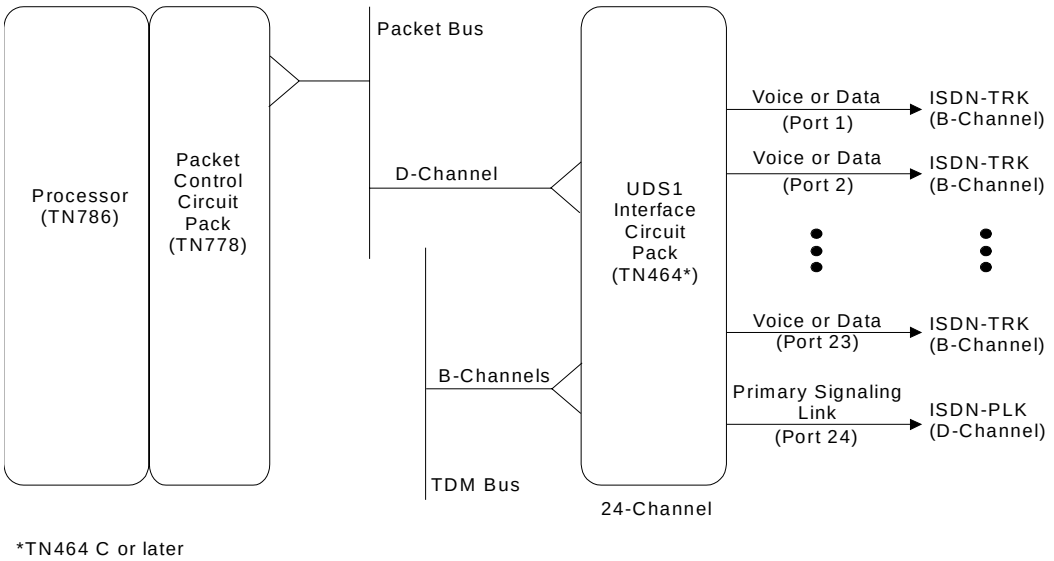

Figure 10-58. PRI Over PACCON DS1 ISDN Trunk Interactions (24-channel interface)

DS1 ISDN Trunk Service States

This section defines the possible service states of a DS1 ISDN trunk, explains the reason for each service state, and provides the recommended recovery procedures (when required).

Service States

- In-Service (INS)

  The B-channel is in its normal operating state.

- Out-of-Service/Far-end (OOS/FE)

  A B-channel is initialized to this state when administered and it may also be in this state if there is a failure on the B-channel attributed to a problem on the far-end switch. The switch sends messages to the far-end to negotiate the B-channel into service. If the far-end does not respond to the messages within a certain time period, then the service state remains out-of-service and maintenance will periodically resend the messages. The trunk is unusable for outgoing calls. On US interfaces, the trunk is unusable for incoming calls, but on non-US interfaces, incoming calls will be accepted.

- Out-of-Service/Near-end (OOS/NE)

  This is the state of the trunk when a hardware failure exists on the link, the NPE Crosstalk Test fails, or when the trunk is busied out by system technician. In this state, the trunk is unusable for incoming or outgoing calls. No messages are sent to the far-end until the signaling link comes back into service or the trunk is released by system technician.

- Maintenance/Far-end (MTC/FE)

  This state is reached when the far-end does not respond to messages sent over the signaling link for a particular trunk after a certain amount of time. This state is different from OOS/FE since the signaling link must have initially been up and the B-channels in-service. The switch will periodically send messages to the far-end to try to negotiate the trunk (B-channel) into service. The trunk is unusable for outgoing calls but will service incoming call requests from the far-end. Note that transitions into MTC/FE do not drop stable calls. Therefore, if the service state changes from in-service to MTC/FE, then stable calls are unaffected.

- Maintenance/Near-end (MTC/NE)

  The trunk (B-channel) is in this state if the signaling link (PI-LINK) is busied out by system technician. The trunk (B-channel) is also temporarily in this state if system technician has issued a **test trunk trunk_group/trunk_ member long** command. This command will execute the ISDN-PRI test call. This test will change the state of the trunk member to MTC/NE for the duration of the test unless a call request comes in from the far-end. In that case, the test would abort. Note that transitions into MTC/NE do not drop stable calls. Therefore, a system technician- demanded **busyout link lnk-no** command will not drop stable trunk calls. In this state, the B-channel is not usable for new outgoing calls, but is available for incoming calls and outgoing test calls.

- Pending States

  If the near-end is expecting a timed response from the far-end for a request to change the service state of a trunk, then the state of the trunk reflects a Pending State.

  — Pending-in-service (PINS)

    The near-end has sent a B-channel maintenance message to the far-end, requesting that the B-channel service state be transitioned to in-service. The far-end has a certain amount of time to respond to the message. The service state will be PINS until either a response is received or the timer expires.

  — Pending-maintenance (PMTC)

    This state is supported only by systems using country protocol 1 (including US). The near-end has sent a B-channel maintenance message to the far-end, requesting that the B-channel service state be transitioned to maintenance. The far-end has a certain amount of time to respond to the message. The service state will be PMTC until either a response is received or the timer expires.

  — Call Activity States

    In addition to the service and pending state, the state of a B-channel also reflects its call activity. If a call is connected over the B-channel, then the state of the trunk will reflect the “active” call state, for example, “in-service/active.” If there is no call on the B-channel, then the trunk will reflect the “idle” call state, for example, “OOS/FE-idle.”

  The following diagram of the DS1 ISDN Trunk service states shows the common progression from one service state to another and the event that caused the change of state.

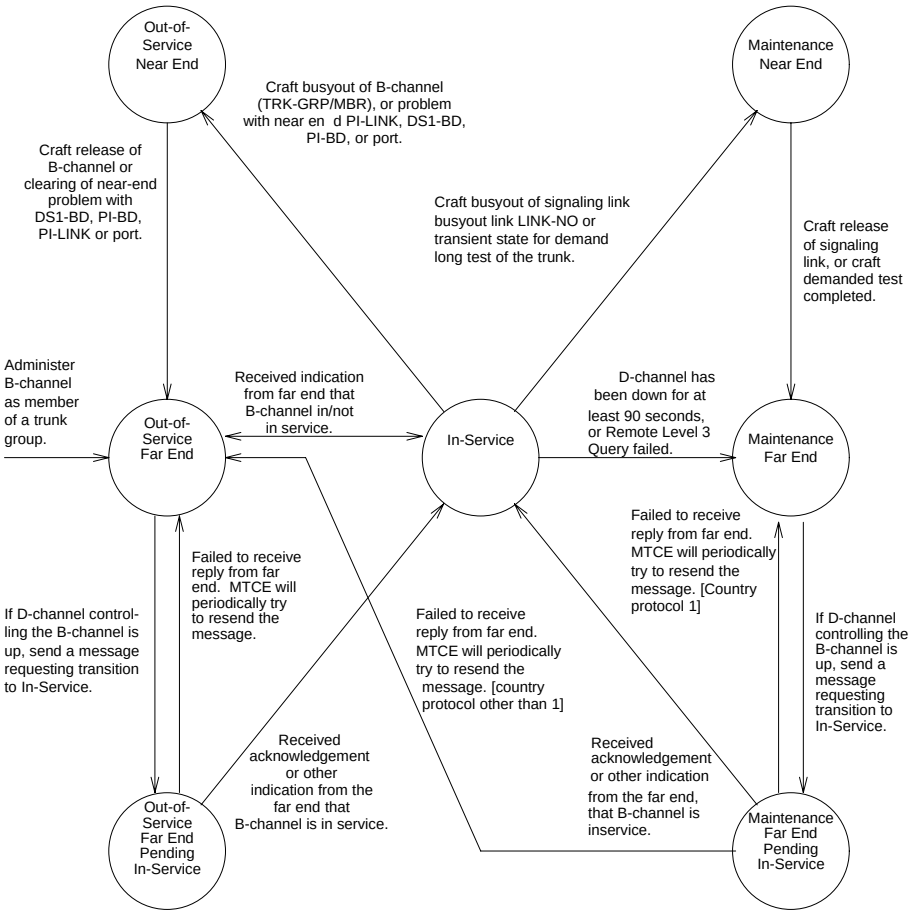

Figure 10-59. Common Progressions in Service States

ISDN-PRI Trunk Service States

The following chart summarizes each of the different DS1 ISDN Trunk service states that can result when the **status trunk <trunk_group/trunk_member>** command is issued.

NOTE:
Refer to Chapter 5, ‘‘Routine Maintenance Procedures’’ for a layered approach to the processing of ISDN-PRI problems.

Table 10-354. ISDN-PRI Trunk Service States (Test #161 Loop Around Test)

Service State	Alarm*	Possible Cause	Possible Solution
out-of-service/NE	Warning	Trunk is demand busied out.	Enter **release trunk** grp#/mbr#.
	Minor	NPE Crosstalk Test (#6) failed.	Replace DS1/UDS1 circuit pack.
	None	DS1 or UDS1 circuit pack lost its signal.	Is the DS1/UDS1 circuit pack or cable removed? Is the far-end switch restarting? Check circuit pack using procedures in DS1-BD or UDS1-BD.
out-of-service/FE	Warning	Unadministered far-end	Administer corresponding trunk on far-end switch.
	Warning	The far-end trunk is busied out.	Check the status of the far-end switch.
pending-in-service, pending-maint	None	Maintenance message was sent and the switch is waiting up to 2 min. for a reply from the far-end.	Wait 2 minutes and check service state after the pending state has cleared.
maint-NE	None	ISDN test call in progress (**test trunk long** and **test isdn-testcall**)	Wait several minutes for test to finish and check status again.
	None	System link has been busied out by command.	Check link status. Release link with **release link** link#.
maint-FE	Warning	Signaling channel has been down for over 90 sec.	Consult ISDN-SGR and/or ISDN-LNK. Far-end signaling channel may be busied out, or the far-end switch may currently be restarting.
	Warning	Repeated failure of far end to respond to messages.	Maintenance software will periodically try to resend messages. You can speed the process with **test trunk grp#/mbr#** and/or **test signaling-gr #**.
	Warning	The far-end trunk is being tested.	Check status of the far-end switch. Wait for testing to finish.
in-service	None	Normal operating state	

Error Log Entries and Test to Clear Values

Table 10-355. DS1 ISDN Trunk Error Log Entries

Error Type	Aux Data	Associated Test	Alarm Level	On/Off Board	Test to Clear Value
0[1]	0	Any	Any	Any	test port PCSSpp sh r 1
1 (a)	Any	None			test port PCSSpp sh r 1
15 (b)	Any	Audit and Update Test (#36)			
18	0	busyout trunk <grp>/<mbr>			release trunk <grp>/<mbr>
19(c)	0	None			
129 (c)		None	WARNING	OFF	test port PCSSpp
130 (d)		None	WARNING	ON	test port PCSSpp
257 (e)	Any	None			test port PCSSpp
513 (f)	Any	None	WARNING	OFF	test port PCSSpp
769 (e)	Any	None			test port PCSSpp
1025(g)	0	None			
1281	Any	Conference Circuit Test (#7)	MIN/ WRN[2]	ON	test port PCSSpp l r 4
1537	Any	NPE Crosstalk Test (#6)	MIN/WRN[2]	ON	test port PCSSpp l r 3
1793 (h)	Any	None			test port PCSSpp
3073 (i)	Any	Service State Audit (#256)			test port PCSSpp
3585 (j)	Any	None			None
3841 (k)	Any	None			None

1 Run the Short Test Sequence first. If all tests pass, run the Long Test Sequence. Refer to the appropriate test description and follow the recommended procedures.

2 Minor alarms on this MO may be downgraded to Warning alarms based on the values used in **set options**. If the Minor alarm is not downgraded by the **set options** values, then the Minor alarm will be upgraded to a Major alarm if 75 percent of the trunks in this trunk group are alarmed.

Notes:

a. These error types indicate a disagreement between this switch and the switch at the other end of the trunk connection with regard to the ISDN *call* state of the DS1 ISDN Trunk. This switch will automatically try to recover by clearing the call, (that is, the call will be torn down). You can use **status trunk <trunk_group/trunk_member>** to determine the state of the trunk.

When running the Short Test Sequence of tests, pay close attention to the results of the Call State Audit Test (#257).

b. This is a software audit error that does not indicate any hardware malfunction. Run the Short Test Sequence and investigate associated errors (if any).

c. Possible protocol mismatch or far-end may be out-of-service.

NOTE:
Many truck problems are caused by incorrect settings of parameters on the trunk group administration form. Settings must be compatible with the local environment and with parameter settings on the far-end. The general term DS1 circuit pack refers to TN464 and TN767 series circuit packs. A DS1 ISDN trunk is a 64 Kbps bearer channel used to transmit digitized voice or data traffic. These trunks, or B-channels, use a separate channel, the D-channel for call-control signaling. This mode of operation is known as out-of-band signaling, as opposed to in-band, robbed-bit signaling, in which signaling is carried in the same channel as the voice or data traffic. One D-channel, or ISDN signaling link (ISDN-LNK), carries signaling messages for several B-channels, forming an ISDN signaling group (ISDN-GRP). A B-channel may be a port on either a TN464 series UDS1 circuit pack or a TN767 series DS1 Interface circuit pack. Two types of DS1 interfaces exist: (1) 24 DS0 channels on a 1.544 Mbps link or (2) 31 DS0 channels + 1 framing channel on a 2.048 Mbps link. For additional maintenance information, see also "DS1-BD (DS1 Interface Circuit Pack)" for TN767 ports and "UDS1-BD (UDS1 Interface Circuit Pack)" for TN464C/D ports.

d. The far-end switch changed its ISDN *service* state to either out-of-service or maintenance. This may be a temporary condition due to testing of that trunk by the far-end *or* a hardware problem with the trunk. Outgoing calls will not be allowed over the trunk. To investigate the status of the trunk, issue **status trunk <trunk_group/trunk_member>**.

e. This error type indicates that the circuit pack has been removed or has been insane for more than 11 minutes. To clear the error, reinsert or replace the circuit pack.

f. These error types indicate a disagreement between this switch and the switch at the other end of the trunk connection with regard to the ISDN service state of the DS1 ISDN Trunk. This switch will automatically try to recover by performing a service state audit. You can use **status trunk <trunk_group/trunk_member>** to determine the state of the trunk.

When running the Short Test Sequence, pay close attention to the results of the Service State Audit Test (#256).

g. This trunk is not recognized by the far-end switch. Investigate the trunk administration for both switches and make changes as necessary.

h. An unexpected SERVICE or SERVICE ACK was received. Possibilities include:

- Translations conflict
- Protocol differences
- ESS may be using NI3 protocol which is not currently implemented in DEFINITY
- B-channel negotiation problem (glare)

i. This error indicates a failure of the DS1/UDS1 Interface circuit pack. When running the Short Test Sequence, the results of the Signaling Link State Check Test (#255) are important.

j. Two Service State Audit attempts have failed (see Test #256). The trunks will not be usable for any outgoing calls (although incoming calls will be accepted) until the test passes and the trunk state is changed to in-service (use **status trunk trunk_group/trunk_member** to investigate trunk status).

k. Error Type 3585 appears when the switch receives an ISDN RESTART message for an ISDN trunk. Calls are cleared with the RESTART message. Therefore, this error type may be associated with a dropped call report from a user.

The following Aux Data values for Error Type 3585 represent the trunk's ISDN call state at the time the unexpected request to restart the channel was received from the remote switch. This information can be useful if dropped calls (cutoffs) are being reported by users of the ISDN-PRI trunks. The meanings of the various Aux Data values are shown below.

Aux Data values of concern; any others can be ignored.

0	A idle trunk received a restart.
10	A call in a stable, talking state was cleared unexpectedly by the far-end with an ISDN RESTART message. This state is called the "active" state.
4, 7, 8 260, 263	A call that has not reached the active state, but has at least reached a ringing state, was cleared unexpectedly by the far-end with an ISDN RESTART message.
1, 3, 6 9, 265	A call that has not yet reached a ringing state was cleared unexpectedly by the far-end with an ISDN RESTART message.
11, 12 19, 531, 267, 268	A call that was in the process of clearing anyway has been cleared by the far-end with an ISDN RESTART message. If this condition occurs frequently, it may mean that the far-end is attempting to clear trunks that it thinks are in a "hung" state. The RESTART message brings the trunk to an idle condition.

l. An ISDN trunk selected by the near-end has been rejected 10 times by the far-end without a successful call. This may indicate a service state mismatch between the near-end and far-end for this trunk that is effecting the end user (that is, customer receives unexpected intercept tones when accessing ISDN trunks). This may indicate that the ISDN trunk is not administered on the far-end.

   The Aux field contains the physical name of the ISDN trunk in decimal. Then, verify that the far-end has this trunk administered. If problems persist, then busy-out the ISDN trunk to take it out of the hunt group.

   The Warning alarm will be retired automatically whenever an outgoing or incoming call that uses this trunk is answered by the called endpoint. If problems persist, then busy-out the ISDN trunk to take it out of the hunt group.

System Technician-Demanded Tests: Descriptions and Error Codes

Investigate tests in the order presented in the table below when inspecting errors in the system. By clearing error codes associated with one test, you may also clear errors generated from other tests in the testing sequence.

Table 10-356. System Technician-Demanded Tests: ISDN-TRK

Order of Investigation	Short Test Sequence	Long Test Sequence	D/ND[1]
NPE Crosstalk Test (#6)		X	ND
Conference Circuit Test (#7)		X	ND
Audit and Update Test (#36)	X	X	ND
Signaling Link State Check Test (#255)	X	X	ND
Service State Audit Test (#256)	X	X	ND
Call State Audit Test (#257)	X	X	ND
ISDN Test Call Test (#258)		X	ND

1 D = Destructive, ND = Non-destructive

NPE Crosstalk Test (#6)

The NPE Crosstalk Test verifies that this port's NPE channel talks on the selected time slot and never crosses over to time slots reserved for other connections. If the NPE is not working correctly, one-way and noisy connections may be observed. This test is usually only part of a port's Long Test Sequence and takes about 20 to 30 seconds to complete.

NOTE:
The TN464C or later UDS1 circuit pack has one SCOTCH-NPE chip instead of several NPE chips.

Table 10-357. TEST #6 NPE Crosstalk Test

Error Code	Test Result	Description/Recommendation
	ABORT	Could not allocate the necessary system resources to run this test. 1. Retry the command at 1-minute intervals a maximum of 5 times.
1000	ABORT	System resources required for this test are not available. The port may be in use on a valid call. Use **status station** or **status trunk** to determine when the port is available for testing. 1. Retry the command at 1-minute intervals a maximum of 5 times.
1001	ABORT	Could not allocate the necessary system resources to run this test. 1. Retry the command at 1-minute intervals a maximum of 5 times.
1002	ABORT	The system could not allocate time slots for the test. The system may be under heavy traffic conditions or it may have time slots out-of-service due to TDM-Bus errors. Refer to TDM-Bus Maintenance to diagnose any active TDM-Bus errors. 1. If the system has no TDM-Bus errors and is not handling heavy traffic, repeat the test at 1-minute intervals a maximum of 5 times.

Continued on next page

Table 10-357. TEST #6 NPE Crosstalk Test — *Continued*

Error Code	Test Result	Description/Recommendation
1003	ABORT	The system could not allocate a tone receiver for the test. The system may be oversized for the number of tone detectors present or some tone detectors may be out-of-service. 1. Look for TTR-LEV errors in the Error Log. If present, refer to TTR-LEV Maintenance documentation. 2. Look for TONE-PT errors in the Error Log. If present, refer to TONE-PT Maintenance documentation. 3. If neither condition exists, retry the test at 1-minute intervals a maximum of 5 times.
1004	ABORT	The port has been seized by a user for a valid call. Use **status station** or **status trunk** to determine when the port is available for testing. 1. Retry the command at 1-minute intervals a maximum of 5 times.
1018	ABORT	Maintenance is disable on this trunk. 1. Enable maintenance by entering “y” in the “Maintenance Tests?” field on page 2 of the **change trunk-group** form.
1117	ABORT	A service state audit message is outstanding. 1. Wait two minutes and then try again.
2000	ABORT	Response to the test request was not received within the allowable time period. 1. Retry the command at 1-minute intervals a maximum of 5 times.
2020	ABORT	The test did not run due to an already existing error on the specific port or a more general circuit pack error. 1. Examine Error Log for existing errors against this port or the circuit pack and attempt to diagnose the already existing error.
2100	ABORT	Could not allocate the necessary system resources to run this test. 1. Retry the command at 1-minute intervals a maximum of 5 times.
Any	FAIL	The NPE of the tested port was found to be transmitting in error. This will cause noisy and unreliable connections. The ISDN-TRK is moved to out-of-service/near-end state. 1. Replace the circuit pack.
	PASS	The port is able to communicate over the TDM Bus.

Conference Circuit Test (#7)

The Conference Circuit test verifies that the NPE channel for the port being tested can correctly perform the conferencing function. The NPE is instructed to listen to several different tones and conference the tones together. The resulting signal is then measured by a tone detector port. If the level of the tone is within a certain range, the test passes.

NOTE:
The TN464C or later UDS1 circuit pack has one SCOTCH-NPE chip instead of several NPE chips.

Table 10-358. TEST #7 Conference Circuit Test

Error Code	Test Result	Description/Recommendation
	ABORT	Could not allocate the necessary system resources to run this test. 1. Retry the command at 1-minute intervals a maximum of 5 times.
1000	ABORT	System resources required to run this test are not available. The port may be in use on a valid call. Use **status station** or **status trunk** to determine when the port is available for testing.
1004	ABORT	The port has been seized by a user for a valid call. Use status station or status trunk to determine when the port is available for testing. 1. Retry the command at 1-minute intervals a maximum of 5 times.
1018	ABORT	Maintenance is disabled on this trunk. 1. Enable maintenance by entering “y” in the “Maintenance Tests?” field on page 2 of the **change trunk-group** form.

Continued on next page

Table 10-358. TEST #7 Conference Circuit Test — *Continued*

Error Code	Test Result	Description/Recommendation
1020	ABORT	The test did not run due to an already existing error on the specific port or a more general circuit pack error. Examine Error Log for existing errors against this port or the circuit pack and attempt to diagnose the already existing error.
2000	ABORT	Response to the test request was not received within the allowable time period.
2100	ABORT	Could not allocate the necessary system resources to run this test. 1. Retry the command at 1-minute intervals a maximum of 5 times.
Any	FAIL	The NPE of the tested port did not conference the tones correctly. This will cause noisy and unreliable connections. 1. Replace the circuit pack.
	PASS	The port can correctly conference multiple connections. User-reported troubles on this port should be investigated using other port tests and examining station, trunk, or external wiring.

Audit and Update Test (#36)

This test sends port level translation data from switch processor to the DS1 interface circuit pack to assure that the trunk's translation is correct. The port audit operation verifies the consistency of the current state of trunk kept in the DS1 interface circuit pack and in the switch software.

Table 10-359. TEST #36 Audit and Update Test

Error Code	Test Result	Description/Recommendation
	ABORT	Internal system error
1018	ABORT	Maintenance is disabled on this trunk. 1. Enable maintenance by entering "y" in the "Maintenance Tests?" field on page 2 of the **change trunk-group** form.
2000	ABORT	Response to the test request was not received within the allowable time period.
2100	ABORT	Could not allocate the necessary system resources to run this test. 1. Retry the command at 1-minute intervals a maximum of 5 times
	FAIL	Test failed due to Internal system error. 1. Retry the command at 1-minute intervals a maximum of 5 times.
	PASS	Trunk translation has been updated successfully. The current trunk states kept in the DS1 interface circuit pack and switch software are consistent. If the trunk is busied out, the test will not run, but will return PASS. To verify that the trunk is in-service: 1. Enter **status-command** to verify that the trunk is in-service. If the trunk is in-service, no further action is necessary. If the trunk is out-of-service, continue to Step 2. 2. Enter **release-trunk** to put trunk back into in-service. 3. Retry the test command.

Signaling Link State Check Test (#255)

As noted in the general description for a DS1 ISDN Trunk, it depends on the health of the DS1/UDS1 interface circuit pack and the ISDN-PRI D-channel (ISDN-LNK/ISDN-PLK) trunk for proper operation. This test checks the status of those critical elements.

Table 10-360. TEST #255 Signaling Link State Check Test

Error Code	Test Result	Description/Recommendation
	ABORT	Internal system error
1018	ABORT	Maintenance is disable on this trunk. 1. Enable maintenance by entering “y” in the “Maintenance Tests?” field on page 2 of the **change trunk-group** form.
1114	ABORT	The signaling link is in a transitional state. 1. Retry the command at 1-minute intervals a maximum of 5 times.
4	FAIL	There is a problem with the Signaling Channel. 1. If the Packet Control circuit pack is used consult the procedures for the ISDN-PRI Signaling Group (ISDN-SGR). Further information may also be obtained by consulting the procedures for the ISDN-PRI Signaling Channel (ISDN-PLK). 2. If the Processor Interface is used consult the procedures for Processor Interface Link (PI-LINK).
8	FAIL	There is a problem with the DS1 interface circuit pack. 1. Consult the procedures for DS1 interface circuit pack (DS1-BD/UDS1-BD).
	PASS	The signaling link hardware is OK.

Service State Audit (#256)

These trunks may be in one of several service states. This test performs a Service State Audit with the far-end switch.

For interfaces using country protocol 1 (including US), the Service State Audit executes in all trunk service states. A message is sent to the far-end switch to ensure that both sides agree on the service state. A PASS for this test simply means that the message has been successfully sent. Two minutes are allowed for a reply. If no reply is received within that 2 minute window, the message is sent out again. If that attempt fails, an error is logged (Error Type 3073) and the switch then attempts another Service State Audit every 15 minutes. If the trunk was initially INS (in-service), it is then placed in the MTC/FE (maintenance state, far-end problem) state. No outgoing calls are placed over this trunk, but incoming calls are accepted. If an incoming call is presented while in such a state, a Service State Audit attempt is immediately attempted (that is, the switch does not wait for the 15-minute cycle, but tries to recover immediately).

For interfaces not using country protocol 1, the Service State Audit executes only if the trunk is in the OOF/FE state. A message is sent to the far-end switch to attempt to bring the trunk back into the in-service state. A PASS for this test simply means that the message has been successfully sent. Two minutes are allowed for a reply. If no reply is received within that two minute window, the message is sent out once again. If no response is received in the next two minute window, then the trunk remains in the OOS/FE state. The switch will attempt another Service State Audit in another hour.

To investigate the service state of the DS1 ISDN Trunk, issue the **status trunk trunk-group/trunk-member** command.

Table 10-361. TEST #256 Service State Audit Test

Error Code	Test Result	Description/Recommendation
1000	ABORT	System resources required to run this test are not available. The port may be on a valid call. Use **status station** or **status trunk** to determine when trunk is available for testing. 1. Check the results of Test #255 (Signaling Link State Check).
1018	ABORT	Maintenance is disable on this trunk. 1. Enable maintenance by entering “y” in the “Maintenance Tests?” field on page 2 of the **change trunk-group** form.

Continued on next page

Table 10-361. TEST #256 Service State Audit Test — *Continued*

Error Code	Test Result	Description/Recommendation
1113	ABORT	The signaling link has failed, so the system cannot send any messages on behalf of this trunk. 1. Check the results of Test #255 (Signaling Link State Check).
1114	ABORT	The signaling link is in a transitional state. 1. Retry the command at 1-minute intervals a maximum of 5 times.
1116	ABORT	The trunk is not in a service state which is appropriate for running the test. This test is only performed in the OOS/FE state.
1117	ABORT	A service state audit message is outstanding. 1. Wait two minutes and then try again.
2100	ABORT	Could not allocate the necessary system resources to run this test. 1. Retry the command at 1-minute intervals a maximum of 5 times.
1113	FAIL	The signaling link has failed, so the system cannot send any messages on behalf of this trunk. 1. Consult the procedures for ISDN-LNK (ISDN-PRI Signaling Link Port) and PI-LINK (Processor Interface Link).
	FAIL	Internal system error 1. Retry the command at 1-minute intervals a maximum of 5 times.
	PASS	Wait 4 minutes and then check the Error Log for any new errors of type 3073. If there are none, then both sides of the ISDN connection agree on the service state; the negotiation succeeded. If there is a new 3073 error, then the negotiation failed (the far-end switch twice failed to respond within 2 minutes). The switch will automatically retry every 15 minutes. If the trunk was initially in-service, it is now placed in the maintenance/far-end state. Incoming calls will be accepted, but no outgoing calls can be originated. If an incoming call is presented, another Service State Audit will be immediately performed in an attempt to put the DS1 ISDN Trunk in the proper state.

Call State Audit Test (#257)

If a call is active on the trunk, the switches on both sides of the connection should agree on the ISDN state of the call, as defined in the ISDN Protocol Specification. This test audits internal call state data by querying the far-end switch as to the ISDN state of the call. It can be helpful when trying to clear a hung call. If the internal call state data on the near-end switch is different than that of the far-end switch, then **the call will be torn down.**

As with Test #256 (Service State Audit), a PASS simply means that an appropriate message was composed and sent to the far-end switch. The ISDN Specification allows up to two minutes for a reply. If a reply is not received within the two minute window, a protocol time-out violation will be recorded in the error log against the associated signaling channel (ISDN-PRI Signaling Link Port, which is listed in the Error Log as ISDN-LNK/ISDN-PLK; the Error Type is 1).

Table 10-362. TEST #257 Call State Audit Test

Error Code	Test Result	Description/Recommendation
1018	ABORT	Maintenance is disable on this trunk. 1. Enable maintenance by entering “y” in the “Maintenance Tests?” field on page 2 of the **change trunk-group** form.
1019	ABORT	An audit is already in progress. 1. Wait two minutes and try again.
1113	ABORT	The signaling link has failed, so the system cannot send any messages on behalf of this trunk. 1. Check the results of Test #255 (Signaling Link State Check).
1114	ABORT	The signaling link is in a transitional state. 1. Retry the command at 1-minute intervals a maximum of 5 times.
1116	ABORT	The trunk is in an out-of-service ISDN service state. 1. A call cannot be present if the trunk is in an ISDN out-of-service state, so a call state audit would be inappropriate. No action necessary. (Use **status trunk**).
2100	ABORT	Could not allocate the necessary system resources to run this test. 1. Retry the command at 1-minute intervals a maximum of 5 times.

Continued on next page

Table 10-362. TEST #257 Call State Audit Test — *Continued*

Error Code	Test Result	Description/Recommendation
	FAIL	Internal system error 1. Retry the command at 1-minute intervals a maximum of 5 times.
	PASS	This switch sent a call state auditing message to the far-end switch to verify the state of the call active on this trunk. If a call state mismatch is found, then the call will be torn down within two minutes. If no call was active, then no message was sent.

ISDN Test Call Test (#258)

This test performs a far-end loop around to a far-end switch over an ISDN trunk. The trunk's service state must be in-service, maint-NE, or out-of-service/NE, and no call can be active on the trunk. The test call can be initiated as part of a long test sequence, or as an individual test, as described below. This test is valid only for systems using country protocol 1 (including US), or when the far end has loop-around capability.

A test call connection is established to a far-end switch over the ISDN trunk to be tested. The digital port on a TN711D Maintenance/Test circuit pack generates a test-pattern bit stream which is sent to the far-end switch and echoed back. The received pattern is then compared to the sent pattern and checked for errors that indicate a loss of integrity on the communications path.

If a test call is running when scheduled maintenance starts, the green LED is turned off. To determine if a test call is still running, use the **list isdn-testcall** and **status isdn-testcall** commands. A lit yellow LED on the Maintenance/Test circuit pack also indicates that a test call is running.

There are two methods available to place an outgoing ISDN-PRI test call in G3iV1.1-286 and G3iV2-386.

In the first method, the test call connection is established over the TDM Bus of the transmit and receive sides of the ISDN-PRI trunk to a data channel. This method is selected when no Maintenance/Test circuit pack resides in the system.

In the second method, the test call connection is established over the TDM Bus of the transmit and receive sides of the ISDN-PRI trunk to a digital trunk testing port on the Maintenance/Test circuit pack. The Maintenance/Test Digital Port generates a pseudo bit stream. A pictorial description of the outgoing ISDN-PRI test call connectivity is contained in the following figure.

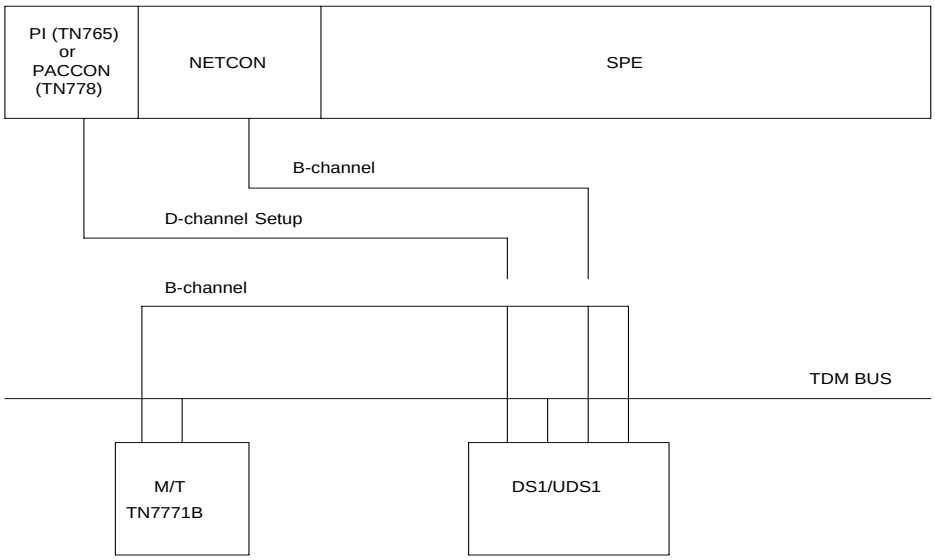

Figure 10-60. ISDN-PRI Outgoing Test Call

Synchronous Commands

You can demand a synchronous outgoing test call by using the following maintenance commands:

- **test trunk trunk-group-no/member-no long [repeat number]**
- **test board board-location long [repeat number]**
- **test port port-location long [repeat number]**

Whenever a circuit translates to an ISDN-PRI trunk during a Long Test Sequence, an outgoing test call is invoked. If the B-channel is unrestricted (B8ZS or HDB3) the default duration of the test call is 8.6 seconds. Otherwise, if the B-channel is restricted (ZCS) the default duration of the test call is 9.4 seconds. Once the test call completes, the bit error rate is retrieved from the Maintenance/Test Digital Port. A bit error rate greater than zero is reported as a failure to the Manager I terminal (MGRI). A failure indicates the need to run further diagnostics, such as the **test isdn-testcall** command.

If no Maintenance/Test circuit pack exists, the outgoing ISDN-PRI test call is established over a high speed data channel on the Network Control (NETCON) circuit pack (DATA-BD).

Asynchronous Commands

You can start, query, and stop an outgoing test call by using the following maintenance commands:

- **test isdn-testcall trunk-group-no/member-no [minutes]**

  This command enables you to start an outgoing ISDN-PRI test call for a maximum of two hours (120 minutes).

- **status isdn-testcall trunk-group-no/member-no**

  This command displays the progress of the outgoing test call by reporting the bit and block error rates of the tested B-channel specified by the “trunk group no/member no” identifier.

- **clear isdn-testcall trunk-group-no/member-no**

  This command enables you to stop an outgoing test call already in progress. The **trunk-group-no/member-no** identifier specifies the B-channel used to stop the test call. The measurements are not cleared until the next test call begins.

NOTE:
Only one trunk can be tested in a given port network, until the test call is canceled or completes.

Table 10-363. TEST #258 ISDN TEST Call

Error Code	Test Result	Description/Recommendation
4	ABORT	There is a problem with the Processor Interface Link. 1. Refer to PI-LINK (Processor Interface Link).
8	ABORT	There is a problem with the DS1 interface circuit pack. 1. Refer to DS1-BD (DS1 Interface Circuit Pack).
1004	ABORT	B channel in use. 1. Determine if a call is active on this DS1 ISDN Trunk via **status trunk.** 2. When the service state indicates in-service/idle, retry the test.
1005	ABORT	Bad Configuration (that is, no Maintenance/Test circuit pack) Issue **test trunk <trunk Group/trunk member>** and make sure there is a DATA-CHL (NETCON channel) administered.
1018	ABORT	Test call is disabled. 1. Enable Maintenance on the Trunk Group form.

Continued on next page

Table 10-363. TEST #258 ISDN TEST Call — *Continued*

Error Code	Test Result	Description/Recommendation
1019	ABORT	Another Test call is in progress. 1. Issue **list isdn-testcall** to locate the test call. 2. Issue **status isdn-testcall** to find out the duration and start time of the test call. 3. Issue **clear isdn-testcall** to stop the test call from running.
1020	ABORT	There is a problem with DS1 Interface Circuit Pack. 1. Refer to the DS1-BD (DS1 Trunk circuit pack).
1024	ABORT	Maintenance/Test Digital Port in use. 1. Wait until yellow and green LEDs are turned off on the Maintenance/Test circuit pack. 2. Retry the test.
1113	ABORT	The signaling link has failed. Therefore, the system cannot send any messages on behalf of this trunk. 1. Check the results of Test #255 (Signaling Link State Check Test).
1114	ABORT	The signaling link is in a transitional state. 1. Retry the command at 1-minute intervals a maximum of 5 times.
1116	ABORT	The switch could not appropriately change the ISDN service state. 1. Determine if a call is active on this DS1 ISDN Trunk (use **status trunk**). 2. If not, check the Error and Alarm Logs for problems with this ISDN-TRK (DS1 ISDN Trunk) MO.
1117	ABORT	ISDN B-channel maintenance message is already outstanding. 1. Wait two minutes. Then try again.
1118	ABORT	Far-end of ISDN trunk is not administered. 1. Check the administration of the far-end ISDN trunk. 2. Issue **status trunk.** 3. Try the test again.

Continued on next page

Table 10-363. TEST #258 ISDN TEST Call — *Continued*

Error Code	Test Result	Description/Recommendation
1119	ABORT	The test call was aborted due to a normal call attempt on this trunk. The test call is performed only if the trunk is idle. 1. Either wait for the normal call to terminate normally, or use **busyout trunk** to force it to be dropped.
1120	ABORT	The DS1 ISDN Trunk is in the ISDN out-of-service/far-end state. 1. Try to change the service state via Test #256 (Service State Audit Test). Then retry this test. **However, the trunk may be in the out-of-service/far-end state due to problems at the far-end switch. If that is the case, no remedial action can be taken at this end.**
1122	ABORT	There is no test line number for the far-end switch. 1. Check the Trunk Group Administration form.
1123	ABORT	There is no Feature Access Code administration for this Facility Test. 1. Check the Dial Plan and Feature Administration forms.
None 2012 2000	ABORT	Internal system error 1. Retry the command at 1-minute intervals a maximum of 5 times.
2035	ABORT	The call has timed out, perhaps because of a lack of system resources. 1. Wait 1 minute and try again.
2036 2037	ABORT	Internal system error 1. Follow the recommendation for ABORT code 2012.
2038 2039	ABORT	A problem occurred while trying to read the test data. 1. Wait 1 minute and then try again.
2040	ABORT	Internal system error 1. Follow the recommendations for ABORT code 2012.
2041	ABORT	The call has timed out, perhaps because of a lack of system resources. 1. Follow the recommendations for ABORT code 2035.
2066	ABORT	Could not establish test call. 1. Retry the command at 1-minute intervals a maximum of 5 times.

Continued on next page

Table 10-363. TEST #258 ISDN TEST Call — *Continued*

Error Code	Test Result	Description/Recommendation
2067	ABORT	The call has timed out, perhaps because of a lack of system resources. 1. Follow the recommendations for ABORT code 2035.
2074	ABORT	Bit and Block Error query failed. 1. Retry the command at 1-minute intervals a maximum of 5 times. 2. If the test continues to abort, there may be a serious internal problem with Maintenance/Test Digital Port.
2075	ABORT	Internal system error 1. Follow the recommendations for ABORT code 2012.
2100	ABORT	Could not allocate the necessary system resources to run this test. 1. Retry the command at 1-minute intervals a maximum of 5 times.
2104	ABORT	Call dropped or could not be originated. 1. Make sure service is provisioned by the network. 2. Check the administration of the far-end test line extension on the trunk group administration form. 3. Check the administration of the test call BCC (Bearer Capability Class) on the trunk group administration form. 4. Check the reason for termination with **status isdn-testcall**. 5. For further instructions see “Troubleshooting ISDN-PRI Test Call Problems” in Chapter 5, ‘‘Routine Maintenance Procedures’’. 6. Try the test again.
2201 2202 2203 2204 2205	ABORT	Internal system error 1. Follow the recommendations for ABORT code 2012.
2206	ABORT	Could not allocate the necessary system resources to run this test. 1. Follow the recommendations for ABORT code 2100.
2208	ABORT	Internal system error 1. Follow the recommendations for ABORT code 2012.

Continued on next page

Table 10-363. TEST #258 ISDN TEST Call — *Continued*

Error Code	Test Result	Description/Recommendation
2209 2210	ABORT	Could not allocate the necessary system resources to run this test. 1. Follow the recommendations for ABORT code 2100.
2211	ABORT	Internal system error 1. Follow the recommendations for ABORT code 2012.
2212	ABORT	Call terminated by unexpected disconnect. 1. Wait 1 minute and then try again.
2213	ABORT	The call has timed-out, perhaps because of a lack of system resources. 1. Follow the recommendations for ABORT code 2035.
2214	ABORT	Call terminated by unexpected disconnect. 1. Wait 1 minute and then try again.
2215 2216 2217 2218 2219	ABORT	Internal system error 1. Follow recommendations for ABORT code 2012.
2220	ABORT	Call terminated prematurely. 1. Wait 1 minute and try again.
2221 2222 2223 2224 2225 2226	ABORT	Internal system error 1. Follow recommendations for ABORT code 2012.
2227	ABORT	Could not allocate the necessary system resources to run this test. 1. Follow the recommendations for ABORT code 2100.

Continued on next page

Table 10-363. TEST #258 ISDN TEST Call — *Continued*

Error Code	Test Result	Description/Recommendation
2042	FAIL	**This is the main purpose of the test.** The comparison of the data sent with the data received indicates a loss of integrity on the communications path. 1. The trunk should be taken out-of-service and the quality of the DS1 line should be investigated. The investigation should include an in-depth analysis of the DS1 facility including the transmission facility and any external equipment such as DACs, CSUs, etc. If **test isdn-testcall** is used, then the investigation should include getting the bit and block error rates by invoking **status isdn-testcall**.
	PASS	The call worked. A test pattern was sent and received properly; the communications path is OK if the synchronous test call command was issued. If **test isdn-testcall** was used, a PASS indicates that the test call was established. A **status isdn-testcall** must be invoked to query the bit and block error rates to determine if the test call passed. An in-depth analysis of the DS1 facility including the transmission facility and any external equipment such as DACs, CSUs, etc., should take place if the bit and block error rates are not acceptable.

JNL-PRNT (Journal Printer Link)

MO Name (in Alarm Log)	Alarm Level	Initial Command to Run	Full Name of MO
PMS-PRNT /JNL-PRNT	MINOR	test journal pms-log/wakeup-log	Journal Printer Link
PMS-PRNT/ JNL-PRNT	WARNING	test journal pms-log/wakeup-log	Journal Printer Link

NOTE:
Since the maintenance strategy for both the JNL-PRNT (Journal Printer Link) and PMS-PRNT (PMS Printer Link) MO is the same, both of these MOs are described in the PMS-PRNT/JNL-PRNT Maintenance documentation.

LGATE-AJ

See BRI-SET.

LGATE-BD

See BRI-BD.

LGATE-PT

See BRI-PT.

LIC-ERR (License-Error Mode)

MO Name (in Alarm Log)	Alarm Level	Initial Command to Run	Full Name of MO
LIC-ERR	MAJOR	NONE	License-Error Mode

NOTE:
The License-Error Mode maintenance object (LIC-ERR) is a non-traditional MO. As a result, there are no associated tests or commands that are executed in the traditional manner.

Maintenance object LIC-ERR works in concert with maintenance object NO-LIC to look for any errors/violations associated with the License File. Once a License File error occurs, maintenance object LIC-ERR logs the error, raises an alarm, and starts a timer that is associated with the error. When the timers threshold has been exceeded, MO NO-LIC will cause call processing to be restricted. All call origination will be restricted to outgoing ***emergency numbers***, incoming calls will be restricted to an ***Administration*** (Attendant Console) number.

The license file is loaded onto a switch during initialization of the switch software, restore of translations, and periodically. After initialization, a query is made to a software module called the License Server. This module reads the license file, compares a serial number in the license file to a serial number in hardware, compares the software version in the license with the running software version, and if a match occurs, delivers permission to run to the DEFINITY software along with a new feature mask. The feature mask controls revenue-associated options.

Error Log Entries and Test to Clear Values

Table 10-364. LIC-ERR Error Log Entries

Error Type	Aux Data	Associated Test	Alarm Level	On/Off Board	Test to Clear Value
1(a)			MAJOR	OFF	See footnote[1]
257(b)		None	MAJOR	OFF	See footnote[1]
513(c)		None	MAJOR	OFF	See footnote[1]
769(d)		None	MAJOR	OFF	See footnote[1]
1025(e)		None	MAJOR	OFF	See footnote[1]
1281(f)		None	Major	OFF	See footnote[1]

1 Clear this Error Types by providing the correct License File per local instructions.

Notes:

a. Error Type 1—This error indicates a serial number mismatch. The serial number of the processor in carrier A does not match the serial number contained in the License File, and the six-day timer is started. When the six-day timer expires, call processing is restricted to outgoing calls to emergency numbers, and incoming calls to an Administration number only. See MO NO-LIC, error type 1.

b. Error Type 257—This error indicates a serial number mismatch for duplicated systems. For duplicated systems, maintenance software checks the serial number of the processor in carrier B. This serial number must match the serial number contained in the License File. If not, the six-day timer is started. When the six-day timer expires, call processing is restricted to outgoing calls to emergency numbers, and incoming calls to an Administration number only.See MO NO-LIC, error type 257.

c. Error Type 513—This error indicates that the license has expired, and the six-day timer is started. When the six-day timer expires, call processing is restricted to outgoing calls to emergency numbers, and incoming calls to an Administration number only. See MO NO-LIC Error Type 513.

d. Error Type 769—This error indicates that feature usage has exceeded limits, if the license has expired the six-day timer is started. When the six-day timer expires, call processing is restricted to outgoing calls to emergency numbers, and incoming calls to an Administration number only.

e. Error Type 1025—This error indicates:

   — Maintenance software has detected that the Survivable Remote Processor is serving as the ***active processor (in the PPN)*** in violation of the license agreement, and the six day timer is started. See MO NO-LIC Error Type 1025.

f. Error Type 1281—This error indicates that new license was not installed after an upgrade. A 4-hour timer is started. See MO NO-LIC Error Type 1281.

System Technician-Demanded Tests: Descriptions and Error Codes

See test license.

Troubleshooting License File errors

The License File enables the switch's software category, release, features, and capacities. License Files are created using SAP order information and/or current customer configuration information. W*ithout a license file, the switch does not provide normal call processing.*

Without a valid license installed or a mismatched license:

1. The system generates a major alarm.
2. Depending upon the nature of the error, a 6-day countdown timer starts, but call processing continues unchanged.
3. If the countdown timer expires, the switch runs in Administration Mode only, and the call processing capability is limited to incoming and outgoing calls only to pre-administered numbers.

The License File requires a license file serial number from the TN2404 Vintage 3 Processor (SI) circuit pack.

The License File includes a license serial identification number that is matched against the hardware in the system as well as information about the software version, Avaya DEFINITY Servers and Call Center features, Offer Category, and capacities. Once installed or initialized, every hour the system compares these parameters, which determine the system status:

- If everything matches, the switch runs the designated system software version and enables the designated features and capacities in **License-Normal** mode.
- Depending upon the nature of the error, the system generates a major alarm and starts a 6-day countdown timer. When the timer starts, the system is in **License-Error** mode. Upgrades also start a 4-hour countdown timer for the Avaya DEFINITY Server SI.
- If the 6 days pass and the conditions that caused the switch to go into License-Error mode are not remedied, the switch goes into **No-License** mode, in which the switch operates in Administration mode and permits only pre-administered incoming and outgoing calls:
  - All new call originations are denied, except calls to an administered, emergency number.
  - All incoming calls are denied, except calls to an administered, incoming call number. This allows License File delivery from the RFA website through Connect2.
  - These no-license and emergency numbers are administered on the Feature-Related System Parameters screen (**change system-parameters features**).
- Active, stable calls are not affected when the switch enters No-License mode.

- System resets do not reset the 6-day timer. If a system in License-Error mode is reset and the license error remains, the timer picks up the countdown where it left off.
- To clear LIC-ERR alarms, the License File must match the switch hardware and administered parameters.

License mode details

The license modes indicate the system's operational status:

- License-Normal
  - License File installed successfully
  - Feature usage within prescribed limits
  - The license file serial number matches.
  - If it is an upgrade, the switch requires a new License File.
- License-Error
  - License File serial number does not match the hardware
  - System software versions do not match
  - Feature usage exceeded
  - System cannot verify the standby serial number (duplex only)
  - License has expired
- No-License
  - System software versions do not match
  - License File missing or could not be installed
  - Offer Categories do not match
  - The condition(s) that caused the system to enter License-Error mode has not been corrected/resolved, and the 6-day countdown timer has expired.
  - The switch returns to License-Normal mode when the license errors are cleared.

Log in warning messages

If the system is in either License-Error or No-License modes, anyone logging on to the System Access Terminal (SAT) receives a warning message, depending on the conditions.

- When “License Error: Serial Number Mismatch” (or some other description) appears, the system is telling you that
  - The switch is in License-Error mode.
  - The system detected a license file serial number mismatch between the License File and the actual hardware in the switch.
- When “Call Processing Will Be Blocked in Approximately xxx hours” appears, the system is telling you that
  - The switch is in License-Error Mode.
  - The 6-day countdown timer has started and you have xxx hours before you enter No-License mode.
- When “Call Processing Blocked” appears, the system is telling you that
  - The switch is in No-License Mode.
  - The switch allows only incoming and outgoing calls to pre-administered numbers.

License modes

Table 10-365 shows the 3 license modes, descriptions, and repair procedures.

Table 10-365. Error messages and repair procedures

License Mode	Description	Explanation and repair procedure
License-Normal	No mismatches between license and switch; stable running condition	None needed

Continued on next page

Table 10-365. Error messages and repair procedures — *Continued*

License Mode	Description	Explanation and repair procedure
License-Error	Warning mode; call processing supported, 6-day countdown timer begins.	If you log in to the SAT and the message appears: `License-Error: xxxxx; Call Processing Will Be Blocked in Approximately X hours,` the 'xxxx' tells you why you are in License-Error mode, and call processing functions normally for 'X' hours, at which time the system goes into No-License mode. One of the following conditions is present: ■ Active processor serial number does not match the License File. ■ The License File has expired. ■ Feature usage does not match the License File. ■ A new license was not installed after an upgrade. Clear the License-Error mode by ■ Correcting the error or mismatch that caused going into this mode. ■ Installing a valid License File that is consistent with the switch.
No-License	Outgoing and incoming calls only to administered emergency numbers.	If you initially login to the SAT if you get a message that says: `No-License: xxxxx; Call Processing Blocked`, the 'xxxx' tells you why you are in No-License mode, and no call processing is allowed. Calls in progress continue but all new originations are denied. One of the following conditions is present: ■ No License File is installed in the system. ■ The License-Error timer expired. ■ A **reset system 3 preserve-license** command has executed and the Offer Category in translations does not match the License File. Clear No-License mode by: ■ Correcting the error or mismatch that caused going into this mode. ■ Installing a valid License File that is consistent with the switch parameters.

Initialization and periodic checking

When the switch initializes and hourly after that, the system checks all License File parameters. Table 10-366 shows the error messages that you can encounter as a result of these periodic checks and the associated License-Error and No-License modes.

Within the License File is the feature mask, an information set that controls which features are enabled or not on the Customer Options and Special Applications forms. Each of the approximately 150 feature mask entries is one of three types (examples in parentheses):

- Type I: features with a simple on/off state (DCS Call Coverage)
- Type II: features with an alphanumeric setting values associated with them (Logged-in ACD Agents)
- Type III: includes the product ID (license serial identification number), release number, and capacities. Type III features cannot be changed by any login under any circumstances. (IP Telephones, IP Softphones, IP Agents, and R300 Remote Office phones).

Table 10-366. Error messages indicating a change of mode

If the system goes into this mode	And reports this error message	It means that
No-License	License File is Missing or Corrupted	■ License could not be decrypted. ■ Checksum did not match, data possibly lost. ■ Mismatched settings: — Offer Category — Version — Call Center Release — Model ■ Min. and Max. values of “* and # in vector collect step” do not match the License File. ■ IP product defined in translations but not defined in the License File.
No-License	The License has Expired	The license has expired.
No-License	Software Version Mismatch	The current software version does not match the software version in the License File.

Continued on next page

Table 10-366. Error messages indicating a change of mode — *Continued*

If the system goes into this mode	And reports this error message	It means that
No-License	Offer Category Mismatch	The Offer Category in translation does not match the Offer Category in the License File.
License-Error	Serial Number Mismatch	The processor serial number does not match the serial number in the License File.
License-Error	Feature Usage Exceeds Limits	The value of the `Used` field for any TYPE II or TYPE III field on the Customer Options forms (pages 1, 5, 6, and 9) is greater than the value of the field. To more quickly identify the which of these TYPE II and TYPE III features is causing the error, compare the `Used` field with the value of the field itself (the License File value). **NOTE:** Before usage is checked if the value of the field is not between the upper and lower values in the License File, the value of the field is changed in translation to the lower value in the License File.
License-Error	Software Upgrade Requires New License	The switch reports this message immediately after an upgrade. You have 4 hours in which to install the License File.

LOG-SVN (Login Security Violation)

MO Name (in Alarm Log)	Alarm Level	Initial Command to Run[1]	Full Name of MO
LOG-SVN	MAJOR	enable login <login ID>	Login Security Violation

1 Where <login ID> is the services login ID for which the security violation was detected. The *Alt Name* field indicates the login ID associated with the security violation and the major alarm.

The Security Violation Notification (SVN) feature provides notification when the number of failed attempts to access the system administration/maintenance interface meets or exceeds customer administered threshold parameters.

A major alarm is logged whenever a security violation is detected involving an services login ID and that login ID has been disabled as a result of the security violation. The capability to disable a login ID following detection of a security violation involving that login ID is administrable on a per login ID basis.

Refer to *Administrator's Guide for Avaya MultiVantage Software* for information on administration required for Security Violation Notification and the option to disable a login ID following detection of a security violation involving the affected login ID.

Hardware Error Log Entries and Test to Clear Values

Table 10-367. Hardware Error Log Entries and Test to Clear Value

Error Type	Aux Data	Associated Test	Alarm Level	On/Off Board	Test to Clear Value
1-15	None	None	Major	OFF	enable login <login ID>

General Information about log-svn Error Log Entries

a. The number (1 - 15), that appears in the error type field, corresponds to the location the login in the internal login data structure.

b. The *Alt Name* field on the alarm report indicates the login ID associated with the security violation and major alarm.

c. These errors/alarms are associated with a number of failed attempts to access the system management/maintenance interface using an AT&T services login ID that meet or exceed the customer administered threshold parameters. The associated alarm is immediately raised as a major alarm.

d. The affected login ID will be disabled as a result of detection of the security violation, unless it is the last enabled INADS type login on the system. The provision to disable a login ID following detection of a security violation involving that login ID is administrable on a login ID basis.

e. The *enable login* command is used to both enable a login that has been disabled, and to retire any login security violation alarms associated with the login ID.

f. Use of the *enable login* command to enable a login and/or retire alarms must be executed using a login ID with greater service level hierarchy permissions.

g. Access to the *enable login* command is controlled through the Administer Permissions field on the Command Permission Categories form. This field (Administer Permissions) must be set to “y” to access the enable login command.

h. The *Port* alarm report field will set to the port where the final invalid login attempt, involving the alarmed login ID, was detected. Valid port values for G3i products include:

   — MGR1 — Dedicated manager 1 or G3 management terminal connection

   — NET-n — Network controller dial up port

   — INADS — INADS port

   — EPN — EPN maintenance EIA port

   — EIA — Other EIA port

   Valid port value for G3r products include:

   — SYSAM_LOC — Local administration port

   — YSAM_RMT — Remote administration port

   — SYS_PORT —

   — MAINT — Maintenance port

i. The *Svc State* alarm report field will be set to OUT if the login ID is in the disabled state as a result of detection of a security violation involving the login ID. Once the login ID has been enabled, the field will be set to IN.

j. The source or reason of the failed login attempts should be identified and the cause corrected prior to re-enabling a login ID and/or retiring any alarms associated with the login ID. The cause may be something as innocuous as the failure of AT&T services automatic login software, to something as insidious as a hacker attempting to gain access to the switch system management interface.

The login ID associated with that alarm is displayed in the *Alt Name* field of the alarm report.

Prior to retiring an SVN alarm and enabling the associated login ID, the *monitor security-violations login* command can be used to access information about the invalid login attempts that caused the security violation. This information can be useful in determining the source of the invalid attempts and analyzing why they occurred.

The *list logins* command provides status information about logins on the system. If a login has been disabled as a result of a security violation, the status will be "svn-disabled."

Procedure to Retire an SVN Alarm

To retire a SVN alarm:

1. Enter the command **enable login <login ID>.**

   The login ID associated with that alarm is displayed in the *Alt Name* field of the alarm report and the alarm is retired.

MAINT (EPN Maintenance Circuit Pack)

MO Name (in Alarm Log)	Alarm Level	Initial Command to Run	Full Name of MO
MAINT	MINOR	test maintenance sh	EPN Maintenance Circuit Pack
MAINT	MAJOR	test maintenance l	EPN Maintenance Circuit Pack

The EPN Maintenance circuit pack monitors and supports environmental maintenance for the EPNs. The EPN Maintenance circuit pack provides the switch software, a mechanism to enable and disable Emergency Transfer in the EPN (assuming the Emergency Transfer Switch is in the AUTO position). The EPN Maintenance circuit pack invokes Emergency Transfer when the EPN loses contact with the PPN or the EPN Maintenance circuit pack loses contact with all Expansion Interface circuit packs. When AC power fails in the EPN cabinet, no power holdover is available. If an Expansion Interface circuit pack goes insane and is reset six times within 15 minutes, the EPN Maintenance circuit pack holds the Expansion Links reset (which prevents the Expansion Interface circuit pack from running).

The EPN Maintenance circuit pack provides system level alarm LEDs which indicate the absence or presence of Major, Minor, and Warning alarms within the entire system (PPN and EPN).

The EPN Maintenance circuit pack supports a G3MT terminal which runs at 9600 baud. However, the system software throttles the rate of data flow to the EPN Maintenance circuit pack for display on the terminal to about 1200 baud. All system commands can be executed via the EPN terminal. However, due to the slow speed at which the software runs the terminal, it is recommended that the EPN terminal's primary use be for system maintenance rather than system administration.

The PPN communicates with the EPN Maintenance circuit pack using the following path (messages from the EPN Maintenance circuit pack to the PPN take exactly the reverse path). From the PPN, TN773 Processor circuit pack, EPN Maintenance circuit pack messages are passed to the Switch Control on the Network Control circuit pack over the Memory Bus (MBUS) and then over the TDM Bus to the Active PPN Expansion Interface circuit pack. The Active PPN Expansion Interface circuit pack passes the message across the fiber to the Active EPN Expansion Interface circuit pack. The Active EPN Expansion Interface circuit pack then passes the message over a serial link to the EPN Maintenance circuit pack. Figure 10-61 on page 10-1019 illustrates this path.

In Figure 10-61, PROCR means a TN2404/TN790 for a RISC Processor circuit pack, NETCON is the NEtwork Control circuit pack (TN777B) (the Active NETCON circuit pack in a high or critical reliability system), and MB stands for the EPN Maintenance circuit pack. Figure 10-61 shows the connectivity for a system with duplicated Expansion Interface Links.

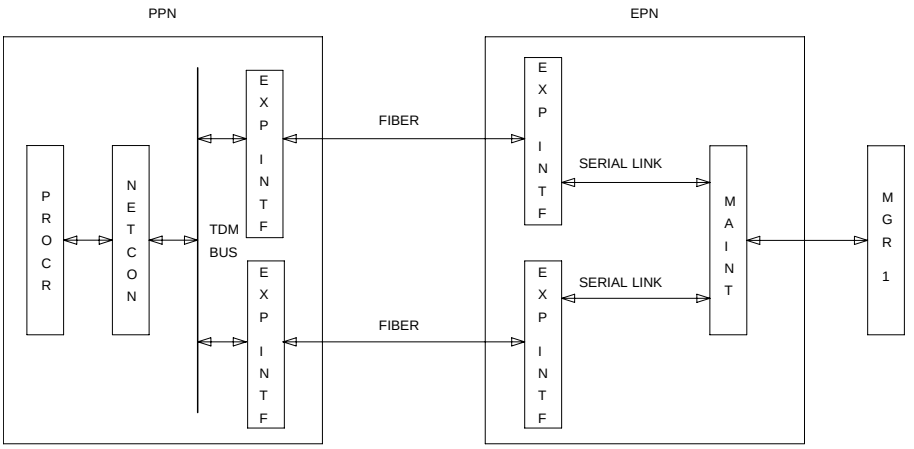

Figure 10-61. EPN Maintenance Circuit Pack Message Flow

The EPN Maintenance circuit pack must be physically inserted into the dedicated slot marked Maintenance in the A carrier of the EPN. The serial links from the EPN Maintenance circuit pack to the Expansion Links physically connect from this dedicated slot to slots 2A01 and 2B02 (2B02 is used only if there are redundant Expansion Links). The serial link from slot 2A01 to the maintenance slot is hard-wired into the backplane of carrier A, whereas the serial link from slot 2B02 to the maintenance slot is a ribbon cable connecting the two slots. The serial link from the EPN Maintenance circuit pack to the terminal is also a ribbon cable which plugs into a connector labeled TERM on the back of carrier A.

The maintenance strategy for the EPN Maintenance circuit pack consists of checking the integrity of the communications path to/from the EPN Maintenance circuit pack, testing individual hardware components on the EPN Maintenance circuit pack, and keeping the system level LEDs up-to-date. The individual hardware components include the serial interfaces which handle the serial links connected to the EPN Maintenance circuit pack. There are three serial interfaces, one for each possible Expansion Interface circuit pack and one for the Manager I (G1) or G3MT terminal.

Since the EPN Maintenance circuit pack supports environmental maintenance in the EPN, trouble with the EPN Maintenance circuit pack can cause environmental maintenance to falsely detect problems. These environmental MOs include DC-POWER, EMG-XFER, EXT-DEV, and CUST-ALM.

Since communication to the EPN Maintenance circuit pack flows through the SW-CTL (Switch Control) and the EXP-INTF (Expansion Interface) circuit packs, any problems with these MOs can prevent communication with the EPN Maintenance circuit pack.

If a repair procedure calls for the EPN Maintenance circuit pack to be replaced, and the EPN has redundant Expansion Links, use the following procedure to prevent an Expansion Links switch when the new EPN Maintenance circuit pack is plugged in.

1. Determine the Standby Expansion Links by using the **status system** command.
2. Busyout the Standby Expansion Links by issuing the **busyout board PCSS** command where PCSS is the 4-character circuit pack address of the Expansion Interface circuit pack in the EPN on the Standby link.
3. Replace the EPN Maintenance circuit pack.
4. Release the Standby Expansion Links by issuing the **release board PCSS** command, where PCSS is the 4-character circuit pack address of the Expansion Interface circuit pack in the EPN on the Standby link.

Error Log Entries and Test to Clear Values

Table 10-368. EPN Maintenance Circuit Pack Error Log Entries

Error Type	Aux Data	Associated Test	Alarm Level	On/Off Board	Test to Clear Value
0[1]	0	Any	Any	Any	test maintenance sh r 1
1 (a)	0 1	EPN Maintenance Circuit Pack Reset Test (#306)	MINOR	ON	test maintenance l
513 (a)	0 1	MGR I Channel Loop Test (#228)	MINOR	ON	test maintenance sh r 3
769 (b)	Any	Sanity Handshake Test (#106)			
1537 (a)	0 1	Sanity Maze Test (#303)	MINOR	ON	test maintenance sh r 3
2561 (a)	0 1	Sanity Handshake Test (#106)	MINOR	ON	test maintenance sh r 3
2817 (a)	0 (b) 1	Serial Channel Loop Test (#229)	MINOR	ON	test maintenance sh r 3

Continued on next page

Table 10-368. EPN Maintenance Circuit Pack Error Log Entries — *Continued*

Error Type	Aux Data	Associated Test	Alarm Level	On/Off Board	Test to Clear Value
3073 (a)	0 1	Network Control Circuit Pack DPR Test (#104)	MAJOR/ WARNING[2]	OFF	test maintenance l
3329 (c)	Any	Serial Link Test (#337)	MINOR/ WARNING[2]	OFF	test maintenance sh r 3
3585 (d)	Any	Serial Link Test (#337)	MINOR/ WARNING[2]	OFF	test maintenance sh r 3

1 Run the Short Test Sequence first. If all tests pass, run the Long Test Sequence. Refer to the appropriate test description and follow the recommended procedures.

2 Major and Minor alarms on this MO may be downgraded to Warning alarms based on the value used in the **set options** command.

Notes:

a. A value of 0 indicates the Expansion Link in the A carrier was active when this error occurred. A value of 1 indicates the Expansion Link in the B carrier was active when this error occurred. To clear this problem, make sure the Active Expansion Link is the same as that indicated by the Aux Value.

b. Multiple values can appear in the Aux Data field. There are other errors in the log if there is a real problem. Use these other errors to troubleshoot the problem.

c. The serial link between the Expansion Link in the A carrier and the EPN Maintenance circuit pack is defective.

d. The serial link between the Expansion Link in the B carrier and the EPN Maintenance circuit pack is defective.

System Technician-Demanded Tests: Descriptions and Error Codes

Always investigate tests in the order presented in the table below. By clearing error codes associated with the *Sanity Handshake Test,* for example, you may also clear errors generated from other tests in the testing sequence.

Order of Investigation	Short Test Sequence	Long Test Sequence	D/ ND[1]
Sanity Handshake Test (#106)	X	X	ND
Network Control Circuit Pack DPR Test (#104) (a)		X	D
EPN Maintenance Circuit Pack Reset Test (#306)		X	D
Serial Channel Local Loop Around Test (#229)	X	X	ND
MGR I Channel Local Loop Around Test (#228)		X	D
EPN Maintenance Circuit Pack Sanity Maze Test (#303)	X	X	ND
EPN Maintenance Circuit Pack Serial Link Test (#337)	X	X	ND

1 D = Destructive; ND = Nondestructive

Note:

a. If you are invoking the Long Test Sequence from the EPN terminal, Test #104 causes the system technician terminal to be logged off, and Test #306 is not run as part of the test sequence. Test #104, however, causes Test #306 to run in an attempt to bring the EPN Maintenance circuit pack back to a known state. After the test sequence runs, the Error Log should be examined for MAINT errors of type 1 and 3073 to determine if the Network Control Circuit Pack DPR Test and EPN Maintenance Circuit Pack Reset Test failed.

   If you are invoking the Long Test Sequence from the PPN, all tests listed are run and their results are displayed on the PPN terminal. The EPN terminal is still logged off.

Network Control Circuit Pack Dual Port Ram (DPR) Test (#104)

This test is destructive.

When executed, this test drops the EPN Manager I (G1) or G3MT terminal login. The login prompt reappears if the test passes successfully.

The Dual Port Ram (RAM), memory shared by the TN777 Processor circuit pack and the Network Control circuit pack, is tested to ensure that it can be read from and written to. EPN Maintenance circuit pack maintenance utilizes the DPR on the Network Control circuit pack for placing messages that eventually get passed along to the Expansion Interface circuit pack in the EPN cabinet and subsequently to the EPN Maintenance circuit pack in the EPN cabinet.

Table 10-369. TEST #104 Network Control Circuit Pack Dual Port Ram (DPR) Test

Error Code	Test Result	Description/Recommendation
1000	ABORT	System resources required for this test are not available.
1030	ABORT	Internal system error
2028	ABORT	Internal system error
2029	ABORT	Internal system error 1. Retry the command at 1-minute intervals a maximum of 5 times.
10401	ABORT	Test disabled using a software patch.
	FAIL	The test failed. 1. Since a portion of the Network Control circuit pack (the Dual Port Ram) is actually being tested here, run the Short Test Sequence against the Network Control circuit pack (SW-CTL) and follow the maintenance procedures for Test #325.
2000	FAIL	Response to the test request was not received within the allowable time period. 1. Retry the command at 1-minute intervals a maximum of 5 times.
	PASS	The communication to the EPN Maintenance circuit pack is good at least up to the Network Control circuit pack. If there are still problems communicating with the EPN Maintenance circuit pack, then these problems must be with either the EXP-LINK (Expansion Links), EXP-INTF (Expansion Interface) circuit pack, or the EPN MAINT (Maintenance) circuit pack.

Sanity Handshake Test (#106)

This test checks the EPN Maintenance circuit pack's ability to respond to queries. A message is sent to the EPN Maintenance circuit pack which then sends a message back. If the response message is received, then the EPN Maintenance circuit pack is queried for the EPN cabinet type. The EPN Maintenance circuit pack reads pins on the backplane of carrier A that identify the type of cabinet and report this information. If a valid cabinet type is returned, then the test passes.

Table 10-370. TEST #106 Sanity Handshake Test

Error Code	Test Result	Description/Recommendation
	ABORT	Internal system error
1000	ABORT	System resources required to run this test are not available.
2000	ABORT	Response to cabinet query was not received within the allowable time period.
2033	ABORT	Internal system error 1. Retry the command at 1-minute intervals a maximum of 5 times.
2046	ABORT	The EPN Maintenance circuit pack reported an invalid cabinet type. Not knowing the cabinet type of the EPN prevents all EPN environment maintenance from running. 1. Retry the command. 2. If the test continues to abort with 2046, then either the EPN Maintenance circuit pack is defective, or the EPN cabinet wiring is defective. First, replace the EPN Maintenance circuit pack. 3. If the test continues to abort with 2046, then the EPN cabinet wiring is defective in the A carrier and the EPN Maintenance circuit pack cannot read the backplane pins to determine the cabinet type.
10601	ABORT	Test disabled via software patch.
	FAIL	EPN Maintenance circuit pack did not respond to Sanity Handshake and the test timed out. 1. Verify that the carrier A power units are good. If the -5 volt unit is defective in the A carrier, then communication with the EPN Maintenance circuit pack is not possible.

Continued on next page

Table 10-370. TEST #106 Sanity Handshake Test — *Continued*

Error Code	Test Result	Description/Recommendation
	FAIL *(cont'd.)*	2. If the -5 volt unit is good and this test continuously fails, background maintenance automatically escalates to an EPN Maintenance circuit pack Reset (Test #306). Otherwise, you can manually invoke an EPN Maintenance circuit pack Reset by issuing **test maintenance long** and evaluating any generated error codes from Test #306. If Test #306 passes, this test should also PASS. Otherwise, use the following steps to determine if the EPN Maintenance circuit pack, or the serial link to the EPN Maintenance circuit pack, is defective: ■ Duplicated Expansion Links: 1. Determine which serial link is the standby by issuing the **status system** system technician command. 2. Switch Expansion Links by entering **set expansion-link PCSS** where PCSS is the 4-character Expansion Interface circuit pack location for the Standby link. 3. Run the Short Test Sequence against the EPN Maintenance circuit pack. If Test #106 still fails, replace the EPN Maintenance circuit pack and retest. Otherwise, follow the error routines for any errors that are logged by this Short Test. ■ Single Expansion Interface Link Switch: 1. Replace the EPN Maintenance circuit pack and invoke the Short Test Sequence. 2. If error persists, replace the EPN Expansion Interface circuit pack, **at a time when the EPN can go down with minimal inconvenience**. 3. If the error still persists, the problem is with the actual serial link in A carrier backplane and not with the EPN Maintenance circuit pack.
	PASS	The communications path to and from the EPN Maintenance circuit pack is sane, and the EPN Maintenance circuit pack can read and report the correct EPN cabinet type. The EPN Maintenance circuit pack may still have problems related to Tests #228, #229, #303, or #306.

MGR I Channel Local Loop Around Test (#228)

This test is destructive.

This test checks the on-board circuitry of the EPN Maintenance circuit pack associated with the serial link for the terminal connection. This test does not cause the terminal to become disconnected. However, any data being displayed on the terminal while the test is running is lost. Figure 10-62 shows the three serial interfaces on the EPN Maintenance circuit pack and is meant to clarify that only the one dealing with the EPN terminal is being tested.

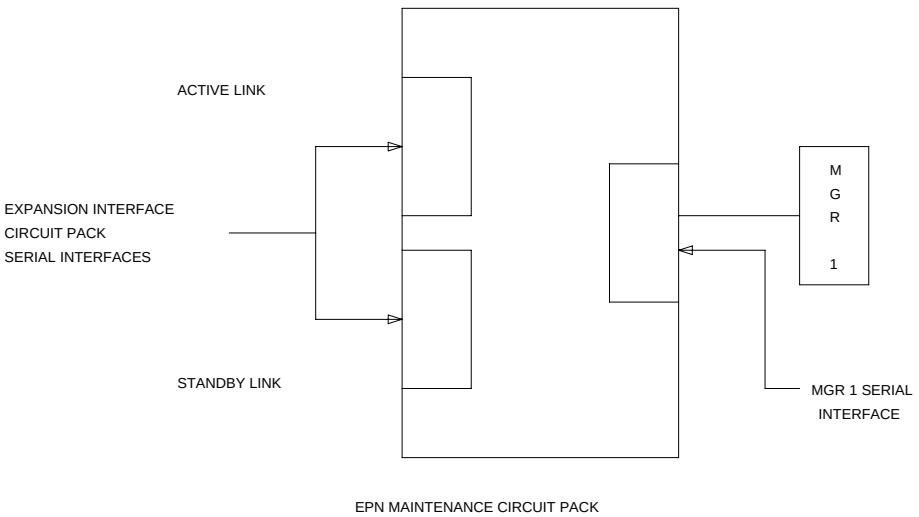

Figure 10-62. EPN Manager I (G1) or G3MT Connection

Table 10-371. TEST #228 MGR I Channel Local Loop Around Test

Error Code	Test Result	Description/Recommendation
1000	ABORT	System resources required to run this test are not available.
2000	ABORT	Response to the test request was not received within the allowable time period.
2033	ABORT	Internal system error 1. Retry the command at 1-minute intervals a maximum of 5 times.

Continued on next page

Table 10-371. TEST #228 MGR I Channel Local Loop Around Test — *Continued*

Error Code	Test Result	Description/Recommendation
2034	ABORT	Background EPN Maintenance circuit pack maintenance is running the MGR I Channel Local Loop Around Test. 1. Wait 30 seconds and retry the test a maximum of 5 times.
22801	ABORT	Test disabled via software patch.
	FAIL	Test failed which means the EPN Manager I (G1) or G3MT terminal is not usable. 1. Run the test three more times. Replace the EPN Maintenance circuit pack if the test continues to fail.
	PASS	The serial interface circuitry on the EPN Maintenance circuit pack which controls the EPN Manager I (G1) or G3MT terminal is functioning properly. If there are still troubles with the EPN Manager I (G1) or G3MT terminal, the problem may be one of the following: 1. The EPN Manager I (G1) or G3MT terminal is not configured properly. The connection between the EPN Manager I (G1) or G3MT and the EPN Maintenance circuit pack must be set up at 9600 baud. 2. The serial link from the back of carrier A to the EPN management terminal may be defective. The serial link consists of the connector on the back of carrier A labeled TERM and the ribbon cable running to the EPN terminal. 3. The EPN terminal may be defective. Try another terminal. 4. Since this test is not 100 percent accurate, there may still be problems with the EPN Maintenance circuit pack.

Serial Channel Local Loop Around Test (#229)

This test checks the on-board circuitry of the EPN Maintenance circuit pack associated with the serial links to the Expansion Interface circuit pack. Figure 10-63 on page 10-1028 shows the three serial interfaces on the EPN Maintenance circuit pack and is meant to clarify that the two dealing with the Expansion Links are being tested. A request is sent to the EPN Maintenance circuit pack over the Active link via the Active Expansion Interface circuit pack serial interface circuitry to test the serial interface circuitry of the standby Expansion Interface circuit pack link. If a response is received, then by definition the serial interface circuitry associated with the Active link is good.

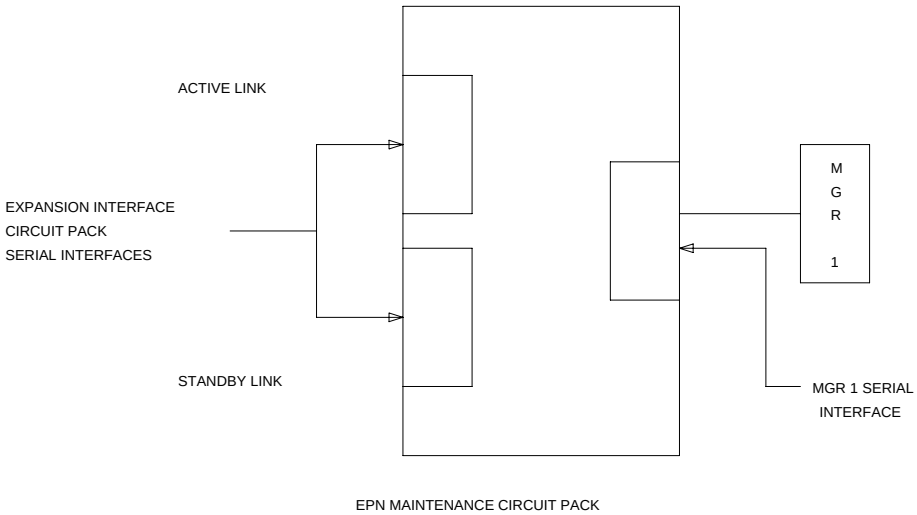

Figure 10-63. EPN Expansion Links Connections

Table 10-372. TEST #229 Serial Channel Local Loop Around Test

Error Code	Test Result	Description/Recommendation
1000	ABORT	System resources required to run this test are not available.
2000	ABORT	Response to the test request was not received within the allowable time period.
2033	ABORT	Internal system error 1. Retry the command at 1-minute intervals a maximum of 5 times.
2034	ABORT	Background EPN Maintenance circuit pack maintenance is running the Serial Channel Local Loop Around Test. 1. Wait 30 seconds, and retry the test a maximum of 5 times.
22901	ABORT	Test disabled via software patch.

Continued on next page

Table 10-372. TEST #229 Serial Channel Local Loop Around Test — *Continued*

Error Code	Test Result	Description/Recommendation
	FAIL	The on-board circuitry associated with the Standby serial link is defective. Since the EPN Maintenance circuit pack reported this failure, the on-board circuitry associated with the Active serial link is functional. 1. This test checks the circuitry on the EPN Maintenance circuit pack associated with the Standby Expansion Interface link. ■ In a switch without duplicated Expansion Links, current service is not affected because the circuitry failing is not being used. Nevertheless, a Minor alarm remains in the Alarm Log against MAINT. Therefore, the EPN Maintenance circuit pack must be replaced. ■ In a switch with duplicated Expansion Links, service is not affected as long as you DO NOT SWITCH LINKS; otherwise, the connection to the EPN Maintenance circuit pack is lost. Losing the EPN Maintenance circuit pack connection means loss of the EPN Manager I (G1) or G3MT and EPN Environment maintenance. If an Expansion Links switch does occur, the software probably switches the links back, based on the relative health of each link. The EPN Maintenance circuit pack must be replaced to correct this problem.
	PASS	The on-board circuitry associated with both Expansion Interface circuit pack serial links is good. If there is still a problem communicating with the EPN Maintenance circuit pack, check the following: 1. The cable comprising the serial link (B carrier Expansion Interface circuit pack to EPN Maintenance circuit pack only) may be defective. 2. The EPN Maintenance circuit pack may actually be defective. **NOTE:** This test may not be 100 percent accurate. 3. The Expansion Interface circuit pack on the Standby link may be defective.

EPN Maintenance Circuit Pack Sanity Maze Test (#303)

The EPN Maintenance circuit pack processor has direct access to special registers in the EPN Maintenance circuit pack. These registers are tied to such things as the Expansion Interface circuit pack reset leads and Carrier Port Power Unit reset leads (which enable the EPN Maintenance circuit pack to recycle carriers). To prevent an insane EPN Maintenance circuit pack from inadvertently controlling these external devices, a special interface called the Sanity Maze is provided that must first be navigated by the EPN Maintenance circuit pack processor prior to any register access. There are two parts to the test. Part 1 involves navigating the Sanity Maze to toggle an unused lead. Part 2 attempts to toggle an unused lead without first navigating the Sanity Maze. The Sanity Maze test passes if Part 1 is successful and Part 2 fails.

Table 10-373. TEST #303 EPN Maintenance CP Sanity Maze Test

Error Code	Test Result	Description/Recommendation
1000	ABORT	System resources required to run this test are not available.
2000	ABORT	Response to the test request was not received within the allowable time period.
2033	ABORT	1. Retry the command at 1-minute intervals a maximum of 5 times.
	FAIL	The Sanity Maze of the EPN Maintenance circuit pack is defective. 1. Replace the EPN Maintenance circuit pack.
	PASS	The Sanity Maze is working properly, and the EPN Maintenance circuit pack can access the unused register. If **recycle carrier** commands (for EPN carriers) do not work, the following problems may still exist: 1. The Carrier Port Power Unit or wiring to the Carrier Port Power Unit may be defective. Refer to CARR-POW (Carrier Port Power Unit) Maintenance documentation. 2. Since this test only tests the EPN, there is a very small probability that the EPN Maintenance circuit pack cannot access those registers that deal with EPN devices. The EPN Maintenance circuit pack may need to be replaced.

EPN Maintenance Circuit Pack Reset Test (#306)

This test is destructive.

The EPN management terminal is dropped and, if the Emergency Transfer switch is in the AUTO position, Emergency Transfer is disabled for the duration of the test.

The EPN Maintenance circuit pack is reset by the Active Expansion Interface circuit pack. After the Expansion Interface circuit pack reports that the EPN Maintenance circuit pack has reset, a handshake message is sent to the EPN Maintenance circuit pack. If the EPN Maintenance circuit pack responds to the handshake, the test passes. If not, it fails. If the test passes, the EPN Manager I (G1) or G3MT is brought back up, and Emergency Transfer is restored to its previous state.

Table 10-374. TEST #306 EPN Maintenance CP Reset Test

Error Code	Test Result	Description/Recommendation
1000	ABORT	System resources required to run this test are not available. 1. Retry the command at 1-minute intervals a maximum of 5 times.
1018	ABORT	Test disabled via software patch.
2000	ABORT	Response to the reset request was not received within the allowable time period. 1. Retry the command at 1-minute intervals a maximum of 5 times. 2. If the test continues to abort, look for and resolve all problems associated with the Expansion Interface circuit pack (EXP-INTF).
2028	ABORT	Internal system error 1. Retry the command at 1-minute intervals a maximum of 5 times.
2030	ABORT	EPN is down. 1. Run the Short Test Sequence against the Expansion Interface circuit pack (**test board PCSS**) where PCSS is the 4-character address of the active Expansion Interface circuit pack), and refer to the maintenance procedures outlined for that circuit pack.
2031	ABORT	Internal system error 1. Retry the command at 1-minute intervals a maximum of 5 times.

Continued on next page

Table 10-374. TEST #306 EPN Maintenance CP Reset Test — *Continued*

Error Code	Test Result	Description/Recommendation
2032	ABORT	Internal system error 1. Retry the command at 1-minute intervals a maximum of 5 times. 2. If the test continues to abort, replace the EPN Maintenance circuit pack.
	FAIL	Expansion Interface circuit pack could not reset the EPN Maintenance circuit pack. For duplicated Expansion Links in the EPN: 1. The Standby Expansion Interface circuit pack may be defective and, thereby, preventing the Active Expansion Interface circuit pack from resetting the EPN Maintenance circuit pack. Unplug the Standby Expansion Interface circuit pack, and attempt to reset the EPN Maintenance circuit pack using the **test maint long** command. If Test #306 passes, replace the Standby Expansion Interface circuit pack, and attempt the reset test again. If Test #306 fails, then replace the Standby EPN Expansion Interface circuit pack. 2. The Active Expansion Interface circuit pack may be defective and unable to reset the EPN Maintenance circuit pack. To determine which is the Standby link, enter the **status system** command from the Manager I (G1) or G3MT terminal. Switch links by entering the **set expansion-link** command followed by the 4-character Expansion Interface circuit pack location for the Standby link. Now reset the EPN Maintenance circuit pack again by using the **test maintenance long** command. If the test passes, the problem is with the known Standby Expansion Interface circuit pack. Repeat Step 2 to determine if the Standby Expansion Interface circuit pack should be replaced. 3. Replace the EPN Maintenance circuit pack, and run the test again. If the test passes, the problem is with the EPN Maintenance circuit pack. Switch Expansion Links, and run the test again. The test should pass with both Expansion Interface circuit packs being active. 4. If the B carrier Expansion Interface circuit pack is active, the ribbon cable connecting the Expansion Interface circuit pack and the EPN Maintenance circuit pack may be defective. Check the ribbon cable to make sure it is connected properly and is not damaged.

Continued on next page

Table 10-374. TEST #306 EPN Maintenance CP Reset Test — *Continued*

Error Code	Test Result	Description/Recommendation
		For single Expansion Links in the EPN: 1. Replace the EPN Maintenance circuit pack, and run the test again. If it passes, the problem is with the EPN Maintenance circuit pack. 2. If the test fails, replace the Expansion Interface circuit pack. If the tests passes, the problem is with the Expansion Interface circuit pack. 3. If the test still fails, the problem is with the serial link wired into the backplane of carrier A.

Continued on next page

Table 10-374. TEST #306 EPN Maintenance CP Reset Test — *Continued*

Error Code	Test Result	Description/Recommendation
2005	FAIL	EPN Maintenance Circuit Pack Reset passed, but the EPN Maintenance circuit pack did not respond to subsequent handshake message. Retry this command three more times. If it continues to fail, the EPN Maintenance circuit pack, the Active Expansion Interface circuit pack, or the serial link is defective. To determine which is defective, follow the appropriate procedures outlined below. ■ Duplicated Expansion Links: 1. Determine which serial link is the Standby by issuing the **status system** system technician command. 2. Switch Expansion Links by entering **set expansion-link PCSS** where PCSS is the 4-character Expansion Interface circuit pack location for the Standby link. 3. Run the Short Test Sequence against the EPN Maintenance circuit pack. If Test #306 still fails, replace the EPN Maintenance circuit pack and retest. Otherwise, follow the error routines for any errors that are logged by this Short Test Sequence. ■ Single Expansion Interface Link Switch: 1. Replace the EPN Maintenance circuit pack and invoke the Short Test Sequence. 2. If the error persists, replace the EI circuit pack, **at a time when the EPN can go down with minimal inconvenience**. 3. If the error still persists, the problem is with the actual serial link in A carrier backplane and not with the EPN Maintenance circuit pack.
	PASS	The Active Expansion Interface circuit pack can reset the EPN Maintenance circuit pack. This implies the EPN Maintenance circuit pack, the Active Expansion Interface circuit pack, and Active serial link are sane. There could still be a problem with the Standby Expansion Interface circuit pack and Standby serial link in a High or Critical Reliability system.

EPN Maintenance Circuit Pack Serial Link Test (#337)

This test is destructive.

This test checks the serial link from the Standby Expansion Interface circuit pack to the EPN Maintenance circuit pack. If there is no Standby link, or the Standby link is down at the time of the test, this test aborts.

NOTE:
The status of the link is changed to “down” when the Standby Expansion Interface circuit pack begins initialization tests (for example, after being reseated). The link status is then updated at the conclusion of these tests.

Table 10-375. TEST #337 EPN Maintenance Circuit Pack Serial Link Test

Error Code	Test Result	Description/Recommendation
1030	ABORT	The active Expansion Link to the EPN Maintenance circuit pack is not running. 1. Follow up on the test results of the EPN Maintenance Circuit Pack Sanity Handshake Test (#105). 2. When problems associated with this test are resolved, rerun Test #337.
1035	ABORT	Internal system error 1. Retry the command at 1-minute intervals a maximum of 5 times.
1036	ABORT	There is no Standby Expansion Link running. Either the system only has one Expansion Link, the Standby Expansion Link is down due to Expansion Link, or the Expansion Interface circuit pack problems. 1. Issue **status system** and determine if the Standby Expansion Link is down or does not exist. If it does not exist, dashes are shown. Otherwise, the link status is shown. If there is no Standby link, this test always aborts. 2. If there is a Standby link and it is down, then refer to EXP-INTF (Expansion Interface Circuit Pack) Maintenance documentation and resolve all alarms on the link. 3. Rerun the test.
2033	ABORT	Internal system error 1. Retry the command at 1-minute intervals a maximum of 5 times.

Continued on next page

Table 10-375. TEST #337 EPN Maintenance Circuit Pack Serial Link Test — *Continued*

Error Code	Test Result	Description/Recommendation
	FAIL	The Serial Link between the current Standby Expansion Interface circuit pack and the EPN Maintenance circuit pack is defective. If the Standby link is on the A carrier, errors of type 3329 are logged; however, if the Standby link is on the B carrier, errors of type 3585 are logged. 1. Replace the EPN Maintenance circuit pack. 2. Rerun the test. If the test continues to fail, replace the Standby EPN Expansion Interface circuit pack. 3. Rerun the test. If the test continues to fail and the Standby link is on the B carrier, then replace the ribbon cable that carries the serial link from Expansion Interface circuit pack B to the EPN Maintenance circuit pack. 4. Rerun the test.
	PASS	The serial link from the Standby Expansion Link to the EPN Maintenance circuit pack is working.

MAPD-BD (MAPD Interface Circuit Pack TN802)

MO Name (in Alarm Log)	Alarm Level	Initial Command to Run[1]	Full Name of MO
MAPD-BD	MAJOR	test board UUCSS sh	MAPD Interface Circuit Pack
MAPD-BD	MINOR	test board UUCSS l	MAPD Interface Circuit Pack
MAPD-BD	WARNING	test board UUCSS sh	MAPD Interface Circuit Pack

1 UU is the universal cabinet number (1 for PPN, 2 or 3 for EPNs). C is the carrier designation (A, B, C, D, or E). SS is the number of the slot in which the circuit pack resides (01 to 21).

The TN802 Multiple Application Platform for DEFINITY (MAPD) circuit pack allows sending voice and fax from Avaya DEFINITY Server through the Internet to another DEFINITY also having this feature or to other PBXs that are equipped with the Internet Telephony Server (ITS-E).

Throughout this section the term TN802 means the MAPD IP trunk circuit pack.

Be sure to observe these special considerations for the TN802:

- Port alarms on this circuit pack display as “TIE-DS1” in the Alarm and Error logs.
- The **reset board** command reboots the MAPD PC CPU, but **busyout board** only busies out all of the emulated ports on the board.
- Switch resets that take the switch out of service for more than 20 seconds also cause the MAPD's PC to reboot, which takes several minutes to complete.

Switch-demanded tests

Switch-demanded diagnostic tests on the TN802 do not run unless the Internet trunking application is running on Windows NT™, located on the circuit pack.

Feature limitations

The Internet trunking application relies on the single call scenario, or a direct, point-to-point call that does not terminate at multiple DEFINITY nodes through call processing. Table 10-376 on page 10-1038 describes the feature limitations for the Avaya DEFINITY Server.

Table 10-376. Avaya DEFINITY Server IP trunk feature/performance limitations

Feature/ Performance	Description	Recommendation
Abbreviated Dialing	Abbreviated Dial strings with embedded pauses lose digits after the pause	Most calls work. Do not create Abbreviated dial strings with embedded pauses.
Compression limitations	All IP trunk calls go through A/D conversion, which uses compression to reduce bandwidth. Each compression degrades the voice signal and creates call processing delay.	No more than 3 compression/decompression cycles for any call. **NOTE:** The compression/ decompression that most voice mail systems use must be counted as 1 cycle.
Call Classifier	IP trunk's compression/ decompression cycle makes ringback, busy and voice detection	Do not administer these features: ■ Call Coverage Redirected Off-Net (CCRON) ■ Certain wireless phone coverage
Call Coverage Call Forwarding Call Transfer	Calls extended across multiple Avaya DEFINITY Server nodes require multiple call paths. Significant voice quality degradation is likely.	Multiple call paths not recommended
Conferencing	Voice quality and delay problems if the party controlling the conference is on the IP trunk (voice paths from external callers come in on the IP trunk, are conferenced, then sent out to other external parties across an IP trunk)	Avoid conference calls where at least two other parties are on the other side of the IP trunk. **NOTE:** The following conferences work OK: ■ Conferences of parties on the local Avaya DEFINITY Server ■ Conferences controlled by the local Avaya DEFINITY Server, involving local parties and only 1 party on the other side of an IP trunk

Continued on next page

Table 10-376. Avaya DEFINITY Server IP trunk feature/performance limitations — *Continued*

Feature/ Performance	Description	Recommendation
DCS	Know limitations: ■ Auto Callback	Coordinate specific administration and between the IP trunk and Avaya DEFINITY Server for any DCS functionality. Some limitations on routing flexibility may apply.
ISDN	IP trunking has no signalling capability.	ISDN not supported. This includes: ■ 10-digit number display ■ QSIG ■ Path replacement
Voice mail	Calls that have terminated at one location and then cover to a second site for voice mail coverage can have voice quality degradation.	Centralized voice mail through an IP network is not recommended.

Backing up to the PCMCIA disk

Table 10-377 details how to back up administration data for the IP trunk application to and restored from the local PCMCIA disk and the Ethernet port. Before backing up, be sure to shut down the application running on the circuit pack, following the procedures in the "Shutting down NT on the TN802" section.

Table 10-377. Backing up TN802 administration data

Step	Description	Comments
1.	Busyout circuit pack	At the Avaya DEFINITY Server terminal type **busyout board UUCSS** (the address of the TN802 circuit pack) and press Enter.
2.	Backup administration TN802 to disk	At the Windows NT desktop, double-click on the **IP Trunk Backup Restore** icon. The IP Trunk Backup/Restore Utility screen appears.
3.	Select utility	In the IP Trunk Backup/Restore Utility dialog screen, click on **Files, Backup**. The IP Trunk Backup screen appears.
4.	Select backup	In the IP Trunk Backup screen, click on the **Backup** button
5.	Wait	Backup can take as much as 20 minutes to complete.
6.	Release circuit pack	At the Avaya DEFINITY Server terminal type **release board UUCss** (the address of the TN802 circuit pack) and press Enter.

NOTE:
Local restore of a complete system from the PCMCIA disk should not require more than 20 minutes assuming that a replacement MAPD pack is available and pre-loaded with the IP trunk application software.

Restoring data from the PCMCIA disk

Before you start

1. Shut down the application running on the circuit pack. See "Shutting down NT on the TN802".
2. Remove the defective IP Trunk circuit pack from the switch (if applicable).
3. Install the replacement IP Trunk circuit pack in the switch (if applicable).
4. Insert the backup diskette into the IP Trunk circuit pack.

Table 10-378. Restore TN802 administration data

Step	Description	Comments
1.	Restore IP Trunk administration	At the Windows NT desktop, double-click on the IP Trunk Back UP Restore icon. The IP Trunk Backup/Restore Utility screen appears.
2.	Select utility	In the IP Trunk Backup/Restore Utility dialog screen, click **Files, Restore**. The IP Trunk Backup screen appears
3.	Select restore	In the IP Trunk Backup screen, click on the **Restore** button.
4.	Wait	Wait until the yellow Disk-In-Use LED (Note 5 in Figure 10-64 on page 10-1042) light is out.

PSTN fallback feature

The Public Switched Telephone Network (PSTN) fallback feature is available on the Internet trunk application software, which periodically pings the remote destinations that the software calls. When the far end returns a poor response time to the ping, DEFINITY's ARS or AAR network routing patterns bypass those ports and direct the call to another port, typically on a PSTN trunk.

When the remote destinations show acceptable response times to subsequent pings, the corresponding ports are returned to "idle," where they are available for service.

Cabinet configuration

Because of overheating, the TN802 circuit pack should not be placed directly above or below another MAPD circuit pack.

UPS protection

Because Windows NT is more vulnerable to damage from a power interruption than the Avaya DEFINITY Server, uninterrupted power supply (UPS) protection is strongly recommended for systems using the TN802 circuit pack.

Faceplate

Figure 10-64 shows the TN802 faceplate.

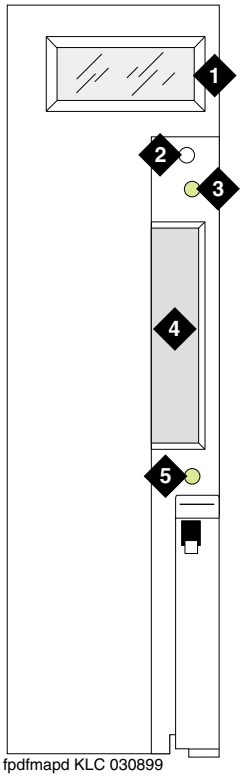

Figure Notes:

1. LCD display (see Table 10-379 on page 10-1043)
2. Reset button (recessed)
3. Red board status LED
4. PCMCIA card slot
5. Yellow PCMCIA disk-in-use LED

Figure 10-64. TN802 faceplate

Table 10-379 lists the TN802 LCD messages that you might see if installing or servicing an IP Trunk.

Table 10-379. TN802 LCD messages for IP trunks

Display	Explanation
PC BOOT	The TN802 MAPD PC is booting up.
IP TRK #	IP Trunk application is running (# character blinks)
IML DWN #	Internal error on the IP Trunk. System shuts down and sends and error message to the board.
MSHUT # where both MSHUT and # are blinking	The system is in the process of shutting down due to a front panel button press. DO NOT attempt to remove board.
MSHUT #, where # is blinking	The system has shut down gracefully.

Support for laptop PCs

Field technicians can access the TN802 circuit pack through:

1. "pcANYWHERE client software"
2. "Directly-connected keyboard, monitor, and mouse"

pcANYWHERE client software

1. Attach a male-to-male serial cable and a NULL modem connector (if not built into the cable you use) to the COM2 connector (Note 8 in Figure 10-65 on page 10-1044) Attach the other end to the serial port of your laptop.
2. Launch the pcANYWHERE application.
3. Click on Add Remote Control Item.
4. In the Properties window, choose the communication port to which you connected the cable in Step 1.
5. Click on Details and configure the settings (Table 10-380):

Table 10-380. Remote connection settings

Field	Value
`Speed`	38,400
`Parity`	None
`Flow Control`	RTS/CTS
`Started by`	Carrier detect (DCD)
`Ended by`	Carrier detect (DCD)

6. Click on the new item icon and the laptop connects to the host pcANYWHERE application on the TN802 circuit pack.

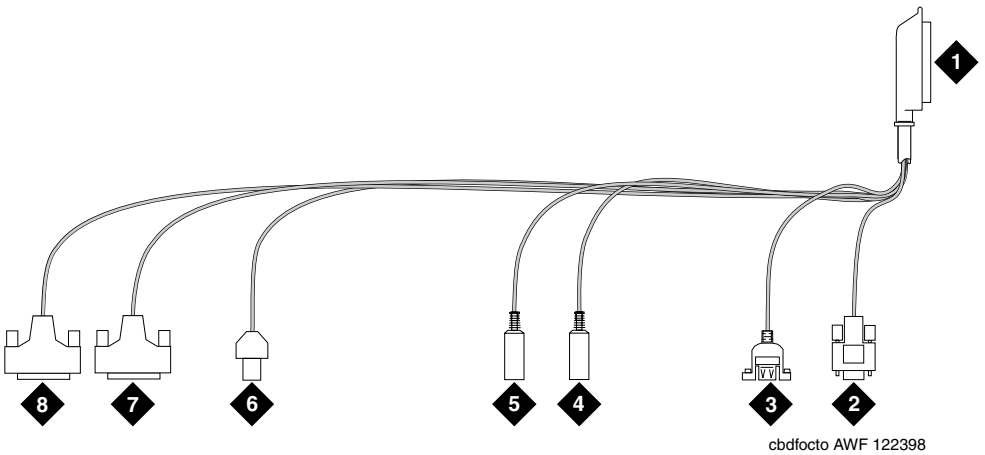

Figure Notes:

1. To TN802 cabinet backplane
2. VGA monitor
3. USB (Universal Serial Bus)
4. Keyboard
5. Mouse
6. Ethernet
7. 25-pin modem connection
8. 25-pin COM2 connection

Figure 10-65. TN802 external cable assembly

Directly-connected keyboard, monitor, and mouse

NOTE:
You need 2 power sources for the monitor and the modem in order to complete this procedure.

NOTE:
The TN802 circuit pack must be booted with a local mouse and keyboard connected to it for these devices to work.

1. Connect the VGA monitor to the VGA connector of the TN802 external cable.
2. Plug the monitor into an AC power receptacle, and turn it on.
3. Attach the keyboard to the keyboard connector of the TN802 external cable assembly.
4. Attach the mouse to the mouse connector of the TN802 external cable assembly.
5. Insert the circuit pack to cause it to boot.

Troubleshooting LAN connections

This section contains information for troubleshooting

- "External connections to the LAN"
- "Internal connections to the LAN"

External connections to the LAN

Test the external connections to the LAN by pinging the

- local host
- external IP trunk server
- another device connected to the network:

1. Click Start in Windows (lower lefthand corner), then select Programs, then Command Prompt.

   This starts a DOS command line session.

2. At the command prompt, type **ping 127.0.0.1** (the local host default address) and press Enter.

   If configured correctly, the system displays:

   ```
   Reply from nnn.nn.nn.nn: bytes=32 time <##ms TTL=###
   ```

   If there is no reply:

   a. Escalate the problem or replace the circuit pack. The problem is not with the external network but within the circuit pack.

3. At the command prompt, type **ping *nnn.nn.nn.nn*** (the external IP trunk server address) and press Enter.

   If configured correctly, the system displays:

   ```
   Reply from nnn.nn.nn.nn: bytes=32 time <##ms TTL=###
   ```

   If there is no reply, verify the IP address and check the physical connections to and from the TN802 circuit pack.

4. At the command prompt, type **ping *nnn.nn.nn.nn*** (the IP address of another computer on the network) and press Enter.

   If configured correctly, the system displays:

   ```
   Reply from nnn.nn.nn.nn: bytes=32 time <##ms TTL=###
   ```

   If there is no reply

   a. Verify the IP address

   b. Check the physical connections to and from the TN802 circuit pack.

   c. Check the internal cables on the TN802 circuit pack (Notes 4 and 6 in Figure 10-67 on page 10-1049).

d. Try pinging another device on the same subnet.

e. Try pinging the gateway to the rest of the network from the subnet.

f. Try pinging a device not on the local subnet but on the network or another subnet.

5. When finished, at the command prompt type **exit** and press Enter.

Internal connections to the LAN

Test the internal connections to the LAN by pinging the

- local host
- internal IP trunk server
- another device connected to the network:

1. Click Start in Windows (lower lefthand corner), then select Programs, then Command Prompt.

   This starts a DOS command line session.

2. At the command prompt, type **ping 127.0.0.1** (the local host default address) and press Enter.

   If configured correctly, the system displays:

   ```
   Reply from nnn.nn.nn.nn: bytes=32 time <##ms TTL=###
   ```

   If there is no reply:

   a. Check that the internal cables on the TN802 circuit pack (Notes 4 and 6 in Figure 10-67 on page 10-1049) have not worked loose.

   b. Otherwise, replace the circuit pack.

3. At the command prompt, type **ping 10.32.64.97** (the internal IP trunk server address) and press Enter.

   - If configured correctly, the system displays:

     ```
     Reply from nnn.nn.nn.nn: bytes=32 time <##ms
     TTL=###
     ```

   - If there is no reply:

     — Check that the internal cables on the TN802 circuit pack (Notes 4 and 6 in Figure 10-67 on page 10-1049) are not loose.

     — Replace the circuit pack.

4. At the command prompt, type **ping 10.32.64.96** (the IP address of the internal Motorola MPC860 processor) and press Enter.
   - If configured correctly, the system displays:

     ```
     Reply from nnn.nn.nn.nn: bytes=32 time <##ms
     TTL=###
     ```

   - If there is no reply:
     - — Check that the internal cables on the TN802 circuit pack (Notes 4 and 6 in Figure 10-67 on page 10-1049) are not loose.
     - — Replace the circuit pack.
5. Ping the gateway: at the command prompt, type **ping XX.XXX.XXX.XXX** (the IP address of the gateway) and press Enter.
6. When finished, at the command prompt type **exit** and press Enter.

Board assembly and cables

Figure 10-66 shows the circuit pack with the two additional boards connected through the side plane.

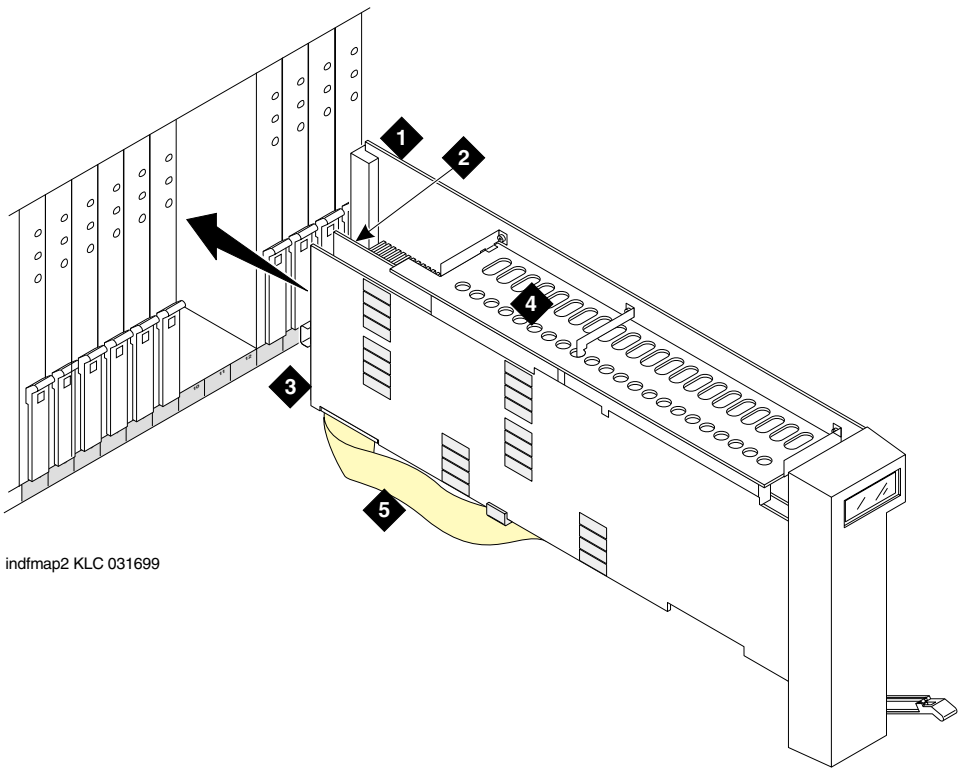

Figure Notes:

1. Main TN802 board
2. Texas Microsystems Inc. (TMI) board
3. Analogic board
4. Side plane
5. SCSA (Signal Computing System Architecture) ribbon cable

Figure 10-66. TN802 board assembly

Figure 10-67 shows a side view of the thee boards and interconnecting cables that make up the TN802.

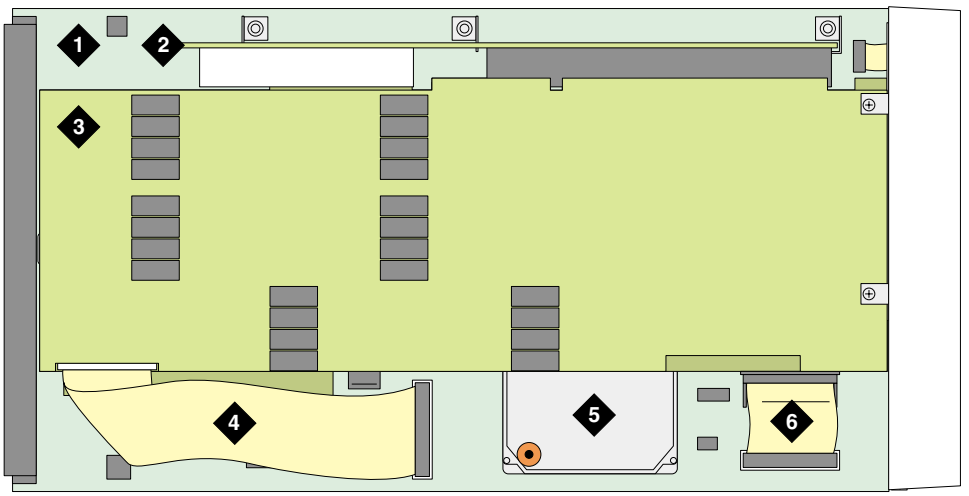

cddfmap2 KLC 040699

Figure Notes:

1. Main TN802 board
2. Side plane
3. Analogic board
4. SCSA (Signal Computing System Architecture) ribbon cable
5. Hard drive
6. Processor I/O ribbon cable

Figure 10-67. TN802 board assembly and cables (side view)

Figure 10-68 shows the end view of the thee boards and interconnecting cables on the TN802.

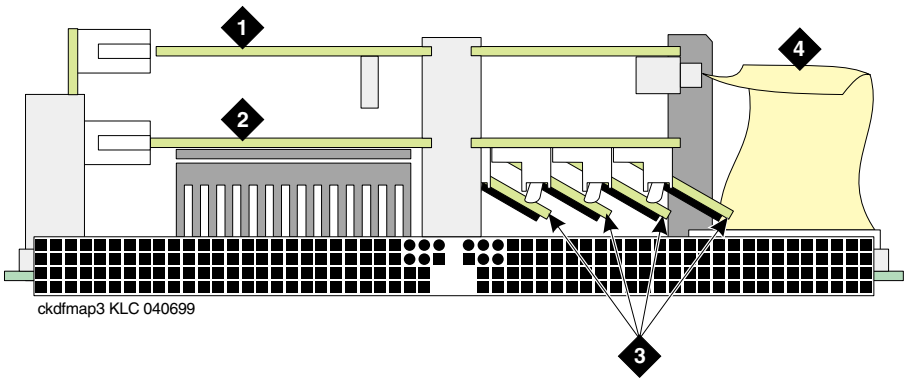

Figure Notes:

1. Analogic board
2. Texas Microsystems Inc. (TMI) board
3. SIMMs (memory)[1]
4. SCSA (Signal Computing System Architecture) ribbon cable

1 If the board is seated and you hear fast beeping, it means that one of the small boards containing the memory chips is dislodged. Secure the memory board firmly in the receptacle and reseat the circuit pack.

Figure 10-68. TN802 board assembly and cables (end view)

Replacing the hard disk

The TN802 hard drive (Note 5 in Figure 10-67 on page 10-1049) is field-replaceable.

Table 10-381. Replacing the TN802 hard drive

Step	Description	Comments
1.	Shut down NT	Shut down Windows NT by either method described in the "Shutting down NT on the TN802" section.
2.	Remove the circuit pack	Unlatch the circuit pack and remove it from the carrier.
3.	Remove the hard drive	Remove the 2 screws and lift the hard drive out of its mounting bracket.
4.	Replace the hard drive	Position the new hard drive in the mounting bracket and replace the 2 screws (Step 3).
5.	Replace the circuit pack	Slide the circuit pack into the slot and lock the latching lever.
6.	Wait for initialization	Wait for ■ the circuit pack to reseat (faceplate LEDs light then go out ■ Windows NT boots (PC BOOT displays on the faceplate LCD) ■ IP Trunk application to run (IP TRK # displays on the faceplate LCD)

Error Log Entries and Test to Clear Values

Table 10-382. MAPD (TN802) Error Log entries

Error Type	Aux Data	Associated Test	Alarm Level	On/Off Board	Test to Clear Value
0[1]	0	Any	Any	Any	test board UUCSS
1 (a)	0	Circuit pack removed or SAKI Test (#53)	MIN/ WRN[2]	ON	

Continued on next page

2 (b)					
18 (c)	0	busyout board UUCSS	WRN	OFF	release board UUCSS
23 (d)	0		WRN	OFF	add ds1 UUCSS
125 (e)	none 3	None	MIN/ WRN[3]	ON	
257	65535	Control Channel Loop Test (#52)	MIN	ON	test board UUCSS l r 20
257 (f)	Any	None			
513 (g)	Any		MIN/ WRN[3]	ON	
514 (h)	46086		MIN/ WRN[3]	ON	
769 (i)	46085		MIN/ WRN[3]	ON	
770 (j)	46096		MIN/ WRN[3]	ON	
1025 (d)	4363	NPE Audit Test (#50)			
1281	Any	Loss of Signal Alarm Inquiry Test (#138)	MIN/ WRN[3]	OFF	test board UUCSS
1537 (k)	46082		MIN/ WRN[3]	ON	
1538 (l)	Any		MIN/ WRN[3]	ON	
1793	Any	Blue Alarm Inquiry Test (#139)	MAJ/ MIN/ WRN [4]	OFF	test board UUCSS
2049	Any	Red Alarm Inquiry Test (#140)	MIN/ WRN[3]	OFF	test board UUCSS
2305	Any	Yellow Alarm Inquiry Test (#141)	MIN/ WRN[3]	OFF	test board UUCSS
2306	Any	Yellow Alarm Inquiry Test (#141)	MIN/ WRN[3]	OFF	test Board UUCSS
2561	Any	Major Alarm Inquiry Test (#142)	MIN/ WRN[3]	OFF	test board UUCSS

Table 10-382. MAPD (TN802) Error Log entries — *Continued*

Error Type	Aux Data	Associated Test	Alarm Level	On/Off Board	Test to Clear Value
2817		Minor Alarm Inquiry Test (#143)	MIN/ WRN[3]	OFF	test board UUCSS
3073 to 3160 (m)	Any	Slip Alarm Inquiry Test (#144)	MIN/ WRN[3]	OFF	test board UUCSS r 6
3330 (n)	46083		MIN/ WRN[3]	ON	
3585 to 3601 (o)	Any	Misframe Alarm Inquiry Test (#145)	MIN/ WRN[3]	OFF	test board UUCSS r 6
3840 (p)	Any	None			
3841 (q)	4358				
3842 (r)	46097				
3843 (s)	46081				
3999 (t)	Any	None			

1 Run the Short Test Sequence first. If all tests pass, run the Long Test Sequence. Refer to the appropriate test description and follow the recommended procedures.

2 If ports are assigned to the circuit pack, then a minor alarm is raised. If no ports are assigned to the circuit pack, then a warning alarm is raised. The alarm is raised after the circuit pack has been missing for a period of 15 minutes. Warning alarms are also raised against any ports administered on the circuit pack.

3 Minor alarms on this MO may be downgraded to warning alarms based on values set in the **set options** command.

4 Major alarms on this MO may be downgraded to minor or warning alarms based on values set in the **set options** command.

Notes:

a. Error Type 1: indicates that the circuit pack has totally stopped functioning or is not fully administered. The alarm is logged about 15 minutes after the circuit pack has been removed or 11 minutes after the SAKI Test (#53) fails.

   To be fully administered, a MAPD circuit pack must meet all of these conditions:

   - Have an entry in the circuit plan (**change circuit pack**)
   - Be administered (**add ds1 UUCSS**)
   - Be physically inserted into the correct slot

If the circuit pack has an entry in the circuit plan and either of the other two conditions are *not* met, a MINOR alarm is logged. To resolve the error, either:

1. Make sure the circuit pack is properly administered and that a functioning MAPD circuit pack is inserted in the correct slot, OR
2. Completely remove the MAPD-BD from the system:
   a. Shut down NT (see ‘‘Shutting down NT on the TN802’’)
   b. Remove any administered DS1 trunks, access endpoints, or PRI endpoints associated with the circuit pack from their respective trunk groups.
   c. Remove the DS1 (**remove ds1 UUCSS**) and circuit pack (**change circuit pack UUCSS**) administration.

If the circuit pack is properly administered and the red LED is still on, follow the instructions for LED Alarms with Error Type 1 in Chapter 7.

b. Error Type 2: NT is down and the system attempts to reset the board. If the reset fails, the board is probably bad.
   1. Replace the circuit pack.

c. Error Type 18: the circuit pack has been busied out.
   1. Release the board (**release board UUCSS**).

d. Error Type 23 and 1025: the MAPD-BD circuit pack is not completely administered. In addition to insertion, the MAPD circuit pack must have all of the following administration:
   - Have an entry in the circuit plan (**change circuit pack**)
   - Be administered as DS1 (**add ds1 UUCSS**)

   The MAPD circuit pack differs from others in that inserting it into the switch backplane is not enough to make the board usable.

e. Error Type 125, no Aux Data: A wrong circuit pack is inserted in the slot where this circuit pack is logically administered. To resolve this problem, either:
   1. Remove the wrong circuit pack and insert the logically administered circuit pack, OR
   2. Re-administer this slot (**change circuit-pack**) to match the circuit pack inserted.

f. Error Type 257: this error is associated with the Common Port Circuit Pack Maintenance Test. Refer to XXX-BD (Common Port Circuit Pack) Maintenance documentation for details.

g. Error Type 513: transient hardware problem.

   Aux Data:

   4352 External RAM failure

   4353 Internal RAM failure

   4355 Internal ROM failure

   1. If the same Error Type/Aux Data value occurs more than once in a 24 hour period, the circuit pack should be replaced. See ''Shutting down NT on the TN802'' before removing the circuit pack.

   If the MAPD board detects only one of these hardware problems, then the error is resolved when none of these faults are detected for 10 minutes.

h. Error Type 514: LAN External RAM Error; hardware fault in the PPE external RAM, used for message buffering to and from the Packet Bus. This error should not occur regularly.

   1. If this error occurs 10 times within 30 minutes, replace the circuit pack. See ''Shutting down NT on the TN802'' before removing the circuit pack.

i. Error Type 769: Transmit FIFO Underflow (threshold is 3 errors within 10 minutes); the circuit pack cannot find the "end of frame" bit when transmitting a frame to Packet Bus.

   1. Clear the alarm using the following command sequence:

      a. **busyout board UUCSS**

      b. **reset board UUCSS**

      c. **test board UUCSS long clear**

      d. **release board UUCSS**

   2. If the error recurs within 10 minutes, replace the circuit pack. See ''Shutting down NT on the TN802'' before removing the circuit pack.

j. Error Type 770: unable to Write LAN Translation RAM (threshold is 2 errors within 10 minutes); a call is aborted because there are no available translation RAM locations for the call connection attempt.

   1. Clear the alarm using the following command sequence:

      a. **busyout board UUCSS**

      b. **reset board UUCSS**

      c. **test board UUCSS long clear**

      d. **release board UUCSS**

   2. If the error recurs within 10 minutes, replace the circuit pack. See ''Shutting down NT on the TN802'' before removing the circuit pack.

k. Error Type 1537: LAN Bus Timeout; the circuit pack transmitted too many bytes on the LAN bus for a single frame. This condition may be caused by:

- an on-board fault
- faulty data received on one of the circuit pack's external ports. If any of the ports on this circuit pack are alarmed, refer to the repair procedures for those maintenance objects.

If the error occurs 3 times within 10 minutes, the system raises the board alarm and isolates it from the Packet Bus.

1. Clear the alarm and restore the board to the Packet Bus using the following command sequence:

   a. **busyout board UUCSS**

   b. **reset board UUCSS**

   c. **test board UUCSS long clear**

   d. **release board UUCSS**

2. If the problem persists, and there are no PKT-BUS alarms or port alarms, then replace the circuit pack. See ''Shutting down NT on the TN802'' before removing the circuit pack.

l. Error Type 1538: hyperactive circuit pack is out-of-service and may exhibit one or more of the following symptoms:

- The common circuit pack tests (for example, Test #50 and/or Test #52) abort with Error Code 2000.
- Port tests on this circuit pack return NO-BOARD.
- A busyout/release of the circuit pack has no affect on test results.
- A **list configuration** command shows that the circuit pack and ports are properly installed.

The circuit pack is isolated from the system and all trunks or ports on this circuit pack are placed into the out-of-service state. The system attempts to restore the circuit pack within 20-30 minutes. When no faults are detected for 20-30 minutes, the MAPD Interface circuit pack is restored to normal operation and all trunks or ports on the MAPD Interface circuit pack return to the in-service state.

1. If the board is not restored to normal operation, or the error recurs after the board is restored to normal operation, escalate the problem.

m. Error Type 3073 - 3160: board is reporting slip errors. Aux Data shows the last reported slip count.

n. Error Type 3330: LAN Critical error; critical failure in the Packet Bus interface to the circuit pack. This failure may be due to an on-board or a Packet Bus fault.

   1. If the Packet Bus is alarmed, refer to the PKT-BUS Maintenance documentation for recommended repair procedures.
   2. If the Packet Bus is not alarmed, clear the alarm and restore the board to the Packet Bus using the following command sequence:
      a. **busyout board UUCSS**
      b. **reset board UUCSS**
      c. **test board UUCSS clear**
      d. **release board UUCSS**
   3. If the problem persists, and there are no PKT-BUS alarms, then replace the circuit pack. See ''Shutting down NT on the TN802'' before removing the circuit pack.

o. Error Type 3585 - 3601: the board received misframe errors; the Aux Data shows the last reported misframe count.

p. Error Type 3840: the circuit pack received a bad control channel message from the switch. This error is not service-affecting, and requires no action. The Aux Data describes the following error events:

4096	Bad major heading
4097	Bad port number
4098	Bad data
4099	Bad sub-qualifier
4100	State inconsistency
4101	Bad logical link

q. Error Type 3841: the circuit pack detected a transient hardware logic error (for example, program logic inconsistency). This error resolves when no faults are detected for 100 minutes. The value in Aux Data field (4358) indicates the type of hardware problem.

r. Error Type 3842: Bad Translation RAM Location Found error; the call continues by using another translation location. This error is not service-affecting and requires no action.

s. Error Type 3843: LAN Receive Parity error; the circuit pack detected an error in a received frame from the Packet Bus. These errors are most likely caused by a Packet Bus problem, but may be due to a circuit pack fault.

   1. Determine whether the problem is isolated to this circuit pack or if the problem is caused by Packet Bus faults (see PKT-BUS).

t. Error Type 3999: the circuit pack sent a large number of control channel messages to the switch within a short period of time.

Error Type 1538 (hyperactivity) also present?	Then the switch:
Y	Takes the circuit pack out-of-service due to hyperactivity
N	Does not take the circuit pack out-of-service, but the circuit pack has generated 50% of the messages necessary to be considered hyperactive. This may be normal during heavy traffic periods.

Shutting down NT on the TN802

Before removing the TN802 circuit pack from the carrier, shut Windows NT™ down first by *following either procedure* described in Table 10-383:

Table 10-383. Windows NT shutdown procedures

Step	Faceplate button	PC interface
1.	Push the recessed button on the front faceplate and hold it in.	Click on the “Start” button in the lower, lefthand corner.
2.	“M shut” flashes on the LCD display	Click on “Shut Down.”
3.	When shutdown is complete, “MSHUT #” displays (“#” is blinking).	Choose the “Shut down the computer?” radio button.
4.	Remove the circuit pack.	Click on “OK.”
5.		Wait for the message indicating that shutdown is complete.
6.		Remove the circuit pack.

System Technician-Demanded Tests: Descriptions and Error Codes

Investigate tests in the order they are presented in Table 10-384. By clearing error codes associated with the NPE Connection Audit Test, for example, you may also clear errors generated from other tests in the testing sequence.

Table 10-384. System Technician-Demanded Tests

Order of Investigation	Apply to TN802?[1]	Short Test Sequence	Long Test Sequence	Reset Board Sequence	D/ND[2]
NPE Connection Audit Test (#50)	Y		X		ND
Control Channel Loop Test (#52)	Y		X		ND
Loss of Signal Alarm Inquiry Test (#138)	N	X	X		ND
Blue Alarm Inquiry Test (#139)	N	X	X		ND
Red Alarm Inquiry Test (#140)	N	X	X		ND
Yellow Alarm Inquiry Test (#141)	N	X	X		ND
Major Alarm Inquiry Test (#142)	N	X	X		ND
Minor Alarm Inquiry Test (#143)	N	X	X		ND
Slip Alarm Inquiry Test (#144)	N	X	X		ND
Misframe Alarm Inquiry Test (#145)	N	X	X		ND
Translation Update Test (#146)	N	X	X		ND
SAKI Sanity Test (#53)	Y			X	D

1 N = No; this test either passes or ABORTS with Error Code 2000 (problem with NT)

2 D = Destructive; ND = Nondestructive

NPE Connection Audit Test (#50)

The system sends a message to the on-board microprocessor to update the network connectivity translation for the SCOTCH-NPE chip on the circuit pack.

Table 10-385. TEST #50 NPE Connection Audit Test

Error Code	Test Result	Description/Recommendation
None 2100	ABORT	System resources required for this test are not available. 1. Retry the command at 1-minute intervals a maximum of 5 times.
1019	ABORT	The test aborted because a test was already running on the port. 1. Retry the command at 1-minute intervals for a maximum of 5 times.
	FAIL	Internal system error 1. Retry the command at 1-minute intervals a maximum of 5 times.
	PASS	The circuit pack's SCOTCH-NPE chip has been updated with its translation.
0	NO BOARD	The test could not relate the internal ID to the port (no board). This could be due to incorrect translations, no board is inserted, an incorrect board is inserted, or an insane board is inserted. 1. Ensure that the board translations are correct. Use **add ds1 UUCSS** to administer the MAPD interface if it is not already administered. 2. If the board was already administered correctly, check the error log to determine whether the board is hyperactive. If this is the case, the board is shut down. Reseating the board re-initializes the board. 3. If the board was found to be correctly inserted in Step 1, then issue **busyout board**. 4. Issue the **reset board** command. 5. Issue the **release busy board** command. 6. Issue the **test board long** command. This should re-establish the linkage between the internal ID and the port.

Control Channel Looparound Test (#52)

This test queries the circuit pack for its circuit pack code and vintage and verifies its records.

Table 10-386. TEST #52 Control Channel Looparound Test

Error Code	Test Result	Description/Recommendation
None 2100	ABORT	System resources required for this test are not available. 1. Retry the command at 1-minute intervals a maximum of 5 times.
	FAIL	The circuit pack failed to return the circuit pack code or vintage. 1. Retry the command a maximum of 5 times. 2. If the problem continues, and if the circuit pack is one of the Port circuit packs, replace the circuit pack. 3. Otherwise, if the circuit pack is part of the SPE, use the procedure described in *Replacing SPE Circuit Packs* in Chapter 5.
	PASS	Communication with this circuit pack is successful.
0	NO BOARD	The test could not relate the internal ID to the port (no board). This could be due to incorrect translations, no board is inserted, an incorrect board is inserted, or an insane board is inserted. 1. Ensure that the board translations are correct. Execute **add ds1 UUCSS** to administer the MAPD interface if it is not already administered. 2. If the board was already administered correctly, check the error log to determine whether the board is hyperactive. If this is the case, the board is shut down. Reseating the board re-initializes the board. 3. If the board was found to be correctly inserted in step 1, then issue **busyout board**. 4. Issue the **reset board** command. 5. Issue the **release busy board** command. 6. Issue the **test board long** command. This should re-establish the linkage between the internal ID and the port.

SAKI Sanity Test (#53)

This test is destructive.

This test resets the circuit pack. The test is highly destructive and can only be initiated by a system technician-demanded **reset board UUCSS** command.

Table 10-387. TEST #53 SAKI Sanity Test

Error Code	Test Result	Description/Recommendation
None	ABORT	System resources required for this test are not available. 1. Retry **reset board** at 1-minute intervals a maximum of 5 times.
1015	ABORT	Port is not out-of-service. 1. Busyout the circuit pack (**busyout board UUCSS**). 2. Execute **reset board**.
2100	ABORT	System resources required for this test are not available. 1. Retry **reset board** at 1-minute intervals a maximum of 5 times.
1	FAIL	The circuit pack failed to reset.
2	FAIL	The circuit pack failed to restart. 1. Execute the **reset board** command again. 2. If the problem persists, replace the circuit pack.

Continued on next page

Table 10-387. TEST #53 SAKI Sanity Test — *Continued*

Error Code	Test Result	Description/Recommendation
	PASS	The circuit pack initializes correctly. 1. Run the Short Test Sequence.
0	NO BOARD	The test could not relate the internal ID to the port (no board). This could be due to incorrect translations, no board is inserted, an incorrect board is inserted, or an insane board is inserted. 1. Ensure that the board translations are correct. Use **add ds1 UUCSS** to administer the MAPD interface if it is not already administered. 2. If the board was already administered correctly, check the error log to determine whether the board is hyperactive. If this is the case, the board is shut down. Reseating the board re-initializes the board. 3. If the board was found to be correctly inserted in step 1, then issue the **busyout board** command. 4. Issue the **reset board** command. 5. Issue the **release busy board** command. 6. Issue the **test board long** command. This should re-establish the linkage between the internal ID and the port.

Loss of Signal Alarm Inquiry Test (#138)

This test is meaningless for the TN802 MAPD circuit pack. Table 10-388 details the test results.

Table 10-388. Loss of Signal Inquiry Test (#138) results

Windows NT up on the TN802?	Then	Cause
Y	Test passes	
Y	Test aborts with ABORT 2000 Error Code.	Windows NT is not communicating with the angel firmware.
N	Test aborts with ABORT 2000 Error Code.	Windows NT down.

Blue Alarm Inquiry Test (#139)

This test is meaningless for the TN802 MAPD circuit pack. Table 10-389 details the test results.

Table 10-389. Blue Alarm Inquiry Test (#139) results

Windows NT up on the TN802?	Then	Cause
Y	Test passes	
Y	Test aborts with ABORT 2000 Error Code.	Windows NT is not communicating with the angel firmware.
N	Test aborts with ABORT 2000 Error Code.	Windows NT down.

Red Alarm Inquiry Test (#140)

This test is meaningless for the TN802 MAPD circuit pack. Table 10-390 details the test results.

Table 10-390. Red Alarm Inquiry Test (#140) results

If Windows NT is up on the TN802	When the switch confirms Red alarm:
Y	Test passes
N	Test aborts with ABORT 2000 Error Code.

Yellow Alarm Inquiry Test (#141)

This test is meaningless for the TN802 MAPD circuit pack. Table 10-391 details the test results.

Table 10-391. Yellow Alarm Inquiry Test (#141) results

If Windows NT is up on the TN802	When the switch confirms Yellow alarm:
Y	Test passes
N	Test aborts with ABORT 2000 Error Code.

Major Alarm Inquiry Test (#142)

This test is meaningless for the TN802 MAPD circuit pack. Table 10-392 details the test results.

Table 10-392. Major Alarm Inquiry Test (#142) results

If Windows NT is up on the TN802	When the switch confirms Major alarm:
Y	Test passes
N	Test aborts with ABORT 2000 Error Code.

Minor Alarm Inquiry Test (#143)

This test is meaningless for the TN802 MAPD circuit pack. Table 10-393 details the test results.

Table 10-393. Minor Alarm Inquiry Test (#142) results

If Windows NT is up on the TN802	When the switch confirms Minor alarm:
Y	Test passes
N	Test aborts with ABORT 2000 Error Code.

Slip Alarm Inquiry Test (#144)

This test is meaningless for the TN802 MAPD circuit pack. Table 10-394 on page 10-1065 details the test results.

NOTE:
The query for slips always returns a 0 count.

Table 10-394. Slip Alarm Inquiry Test (#144) results

If Windows NT is up on the TN802	When the switch confirms Slip alarm:
Y	Test passes
N	Test aborts with ABORT 2000 Error Code.

Misframe Alarm Inquiry Test (#145)

This test is meaningless for the TN802 MAPD circuit pack. Table 10-395 details the test results.

NOTE:
The query for misframes always returns a 0 count.

Table 10-395. Misframe Alarm Inquiry Test (#145) results

If Windows NT is up on the TN802	When the switch confirms Misframe alarm:
Y	Test passes
N	Test aborts with ABORT 2000 Error Code.

Translation Update Test (#146)

The Translation Update Test sends the circuit-pack-level information to the MAPD Interface circuit pack. Translation includes the following data administered for a MAPD Interface circuit pack (report from **display ds1 UUCSS** command):

- DS1 Link Length between two DS1 endpoints
- Synchronization Source Control
- All Zero Suppression
- Framing Mode
- Signaling Mode
- Time Slot Number of the 697-Hz tone
- Time Slot Number of the 700-Hz tone

Table 10-396. TEST #146 Translation Update Test

Error Code	Test Result	Description/Recommendation
	ABORT	Internal system error 1. Retry the command at 1-minute interval s a maximum of 5 times.
	FAIL	Internal system software error. 1. Verify the MAPD Interface circuit pack translation (**display ds1 UUCSS**).

Continued on next page

Table 10-396. TEST #146 Translation Update Test — *Continued*

Error Code	Test Result	Description/Recommendation
	PASS	Translation data has been downloaded to the MAPD Interface circuit pack successfully.
0	NO BOARD	The test could not relate the internal ID to the port (no board). This could be due to incorrect translations, no board is inserted, an incorrect board is inserted, or an insane board is inserted. 1. Ensure that the board translations are correct. Execute the **add ds1 UUCSS** command to administer the MAPD interface if it is not already administered. 2. If the board was already administered correctly, check the error log to determine whether the board is hyperactive. If this is the case, the board is shut down. Reseating the board re-initializes the board. 3. If the board was found to be correctly inserted in step 1, then issue the **busyout board** command. 4. Issue the **reset board** command. 5. Issue the **release busy board** command. 6. Issue the **test board long** command. This should re-establish the linkage between the internal ID and the port.

MAPD-RES (TN802 reserve slot)

MO Name (in Alarm Log)	Alarm Level	Initial Command to Run	Full Name of MO
MAPD-RES	MINOR	NONE	TN802 MAPD reserve slot

The TN802 MAPD (Multi-Application Platform for DEFINITY) circuit pack connects to the switch through a single slot in the backplane, but the circuit pack covers 3 slots. The TN802 uses one functional slot, plus 2 reserve slots to the left of the functional slot. The reserve slots do not have any interaction with the switch.

No tests are associated with this MO. Both **test board** and **busy out board** abort when either is attempted on a reserved slot. An error message indicates that the slot is a reserve slot associated with the circuit pack that the TN802 is emulating, and the requested operation is not valid.

NOTE:
If you see *error type 125* refer to maintenance object XXX-BD for repair procedures.

MEDPRO (Media Processor MAPD Circuit Pack)

MO Name (in Alarm Log)	Alarm Level	Initial Command to Run[1]	Full Name of MO
MEDPRO	MAJOR	test board UUCSS sh	Media Processor MAPD Circuit Pack
MEDPRO	MINOR	test board UUCSS l	Media Processor MAPD Circuit Pack
MEDPRO	WARNING	test board UUCSS sh	Media Processor MAPD Circuit Pack

1 UU is the universal cabinet number (1 for PPN, 2 or 3 for EPNs). C is the carrier designation (A, B, C, D, or E). SS is the number of the slot in which the circuit pack resides (01 to 21).

The TN802B MedPro circuit board is used by the DOLAN (Definity on the LAN) feature to provide voice over IP connectivity. The TN802B can run either:

- R8.1 IP Trunk application — allows the TN802B to emulate a DS1 circuit pack. In this mode, the circuit pack is maintained as a standard DS1 board with its associated Tie trunk ports. The TN802B operates as an integrated Internet Telephony Server (ITS). It communicates with other ITS boxes or IP trunk boards.
- the Media Processor (MedPro) application — allows the TN802B to act as a service circuit to terminate generic RTP streams used to carry packetized audio over an IP network. As part of the overall H.323 implementation, the TN802B or later circuit pack handles the audio streams while the TN799 C-LAN handles the TCP/IP signaling channels. This maintenance plan applies only to a TN802B MedPro running the Media Processor application.

The MedPro hardware combines an angel complex, a Windows NT PC and a TAP802 DSP card in a 3-slot package. When operating as an IP trunk circuit pack, the MedPro emulates a DS1 Tie Trunk circuit pack and blindly responds to DS1 trunk maintenance requests. Actual maintenance is accomplished via the windows NT interface and the ITS software diagnostics.

The Media Processor application is built upon the existing ITS software, and as such is not administered in DEFINITY as a DS1 trunk, and does not emulate a DS1 for maintenance purposes. Use the following Maintenance procedures for this application.

Error Log Entries and Test to Clear Values

Table 10-397. DS1 Interface Circuit Pack Maintenance Error Log Entries

Error Type	Aux Data	Associated Test	Alarm Level	On/Off Board	Test to Clear Value
0[1]	0	Any	Any	Any	test board UUCSS
1(a)	0	Circuit pack removed or SAKI Test (#53)	MIN/WRN[2]	ON	
18(b)	0	busyout board UUCSS	WARNING	OFF	release board UUCSS
23(c)	0		WARNING	OFF	add ds1 UUCSS
125(d)	None	None	MIN/WRN[3]	ON	
257(e)	65535	Control Channel Loop Test (#52)	MINOR	ON	test board UUCSS l r 2
1538(f)	Any	Hyper activity	MIN/WRN[3]	ON	
1793	Any	NIC Loss Of Signal	MIN/WRN[3]		test board UUCSS l r 2
2049(g)	Any	NT PC Failure	MIN/WRN[3]		reset board UUCSS
2305	Any	IP Address Inconsistency			test board UUCSS l r 2
2561	Any	Ping Error	MIN/WRN[3]		test board UUCSS l r 5
3841(h)	4358		Log Only		
3999(i)	Any	None			

1 Run the Short Test Sequence first. If all tests pass, run the Long Test Sequence. Refer to the appropriate test description and follow the recommended procedures.

2 If ports are assigned to the circuit pack, then a minor alarm is raised. If no ports are assigned to the circuit pack, then a warning alarm is raised. The alarm is raised after the circuit pack has been missing for a period of 15 minutes. Warning alarms are also raised against any ports administered on the circuit pack.

3 Minor alarms on this MO may be downgraded to warning alarms based on values set in the **set options** command.

Notes:

a. **Error Type 1** - indicates that the circuit pack has totally stopped functioning or is not fully administered. The alarm is logged about 15 minutes after the circuit pack has been removed or 11-minutes after the SAKI Test (#53) fails.

   To be fully administered, a MedPro circuit pack must meet *all of these 4 conditions*:

   1. Have an entry in the circuit pack form (**change circuit pack**)
   2. Have the MedPro IP address administered (**change node-names**)
   3. Be enabled (**change ip-interface**)

4. Be physically inserted into the correct slot

If the circuit pack has an entry in the circuit pack form and either of the other two conditions are *not* met, a MINOR alarm is logged. To resolve the error either

1. Make sure all conditions for administration are met and that a functioning MedPro circuit pack is inserted in the correct slot

   OR

2. Completely remove the MedPro from the system using the following steps:

   a. Remove the administered IP-Interface associated with the circuit pack.

   b. Physically remove the circuit pack from the slot.

   c. Execute the **remove medpro UUCSS** and **change circuit pack UUCSS** commands.

b. **Error Type 18** -The MedPro Interface circuit pack has been busied out by a **busyout board UUCSS** command.

   1. Release the circuit pack (**release board UUCSS**).

c. **Error Type 23** -The MedPro circuit pack is not completely administered. To be fully administered, a MedPro circuit pack must meet *all of these 4 conditions*:

   1. Have an entry in the circuit plan (**change circuit pack**)
   2. Have the MedPro IP address administered (**change node-names**)
   3. Be enabled (**change ip-interface**)
   4. Be physically inserted into the correct slot.

   A DS1 (MEDPRO, MAPD, UDS1-BD and DS1-BD) differs from most circuit packs in that inserting the circuit pack into the switch is not enough to make the board usable. It must also be administered.

d. **Error Type 125** - no Aux Data: The wrong circuit pack is inserted in the slot where this circuit pack is logically administered.

   1. Remove the wrong circuit pack and insert the logically administered circuit pack

      OR

   2. Re-administer this slot to match the circuit pack inserted (**change circuit-pack**).

e. **Error Type 257** - is associated with the Common Port Circuit Pack Maintenance Test. Refer to XXX-BD (Common Port Circuit Pack) Maintenance documentation for details.

f. **Error Type 1538** - is used to indicate hyperactivity on the circuit pack. Hyperactivity on a circuit pack occurs when the angel is sending too many CCMS messages uplink, 400 per ten seconds for the TN802B, to switch software. The circuit pack will be taken out of service. See error Type 3999.

g. **Error Type 2049** - indicates that the operating system is down. An attempt is made to reset the board automatically. If the reset fails, the board is probably bad and should be replaced.

h. **Error Type 3841** - inconsistent downlink message. This error is not service-affecting. No action is required.

i. **Error Type 3999** - indicates that the circuit pack sent a large number of control channel messages to the switch within a short period of time. If Error Type 1538 is also present, then the circuit pack was taken out-of-service due to hyperactivity. If Error Type 1538 is not present, then the circuit pack has not been taken out-of-service, but it has generated 50% of the messages necessary to be considered hyperactive. This may be completely normal during heavy traffic periods. However, if this error type is logged when the circuit pack is being lightly used, it may indicate a problem with the circuit pack or the equipment attached to it.

System Technician-Demanded Tests: Descriptions and Error Codes

Investigate tests in the order they are presented inTable 10-398 on page 10-1072. By clearing error codes associated with the *Control Channel Loop Test,* for example, you may also clear errors generated from other tests in the testing sequence.

Table 10-398. System Technician-Demanded Tests

Order of Investigation	Short Test Sequence	Long Test Sequence	Reset Board Sequence	D/ND[1]
Control Channel Loop Test (#52)		X		ND
SAKI Sanity Test (#53)			X	D
IP Address Query (#1371)	X	X		D
NIC Query Test (#1383)	X	X		ND
PING Test (#1379)	X	X		ND
NT Reset Test (#1381)			X	D

1 D = Destructive; ND = Nondestructive

Control Channel Looparound Test (#52)

This test queries the circuit pack for its circuit pack code and vintage and verifies its records.

Table 10-399. TEST #52 Control Channel Looparound Test

Error Code	Test Result	Description/Recommendation
None 2100	ABORT	System resources required for this test are not available. 1. Retry the command at 1-minute intervals a maximum of 5 times.
	FAIL	The circuit pack failed to return the circuit pack code or vintage. 1. Retry the command a maximum of 5 times. 2. If the problem continues, and if the circuit pack is one of the Port circuit packs, replace the circuit pack. Otherwise, if the circuit pack is part of the SPE, use the procedure described in *Replacing SPE Circuit Packs* in Chapter 5. 3. Retry the command a maximum of 5 times.
	PASS	Communication with this circuit pack is successful.
0	NO BOARD	The test could not relate the internal ID to the port (no board). This could be due to incorrect translations, no board is inserted, an incorrect board is inserted, or an insane board is inserted. 1. Ensure that the board translations are correct. Administer the MedPro interface if it is not already administered. 2. If the board was already administered correctly, check the error log to determine whether the board is hyperactive. If this is the case, the board is shut down. Reseating the board re-initializes the board. 3. If the board was found to be correctly inserted in step 1, then issue the busyout board UUCSS command. 4. Issue the reset board UUCSS command. 5. Issue the release board UUCSS command. 6. Issue the test board UUCSS long command. This should re-establish the linkage between the internal ID and the port.

SAKI Sanity Test (#53)

This is a destructive test.

This test is only run as a part of a reset board procedure. For the Media Processor, it is necessary to use the **change ip-interfaces** form to disable the Media Processor IP interface before performing this reset board procedure. Other common circuit packs can be reset with the **reset board UUCSS** command which also executes this test.

A reset of this circuit pack will take about 3 1/2 minutes.

Table 10-400. TEST #53 SAKI Sanity Test

Error Code	Test Result	Description/Recommendation
None	ABORT	System resources required for this test are not available. 1. Retry the command at 1-minute intervals a maximum of 5 times.
1015	ABORT	Port is not out-of-service. 1. Busy out the circuit pack. 2. Execute command again.
2100	ABORT	System resources required for this test are not available. 1. Retry the command at 1-minute intervals a maximum of 5 times.
2803	ABORT	It is necessary to reset the board. 1. Use the change ip-interfaces form to disable the Media Processor IP interface. 2. Execute the command again.
1	FAIL	The circuit pack failed to reset.
2	FAIL	The circuit pack failed to restart. 1. Execute command again. 2. If the problem persists, replace the circuit pack.

Continued on next page

Table 10-400. TEST #53 SAKI Sanity Test — *Continued*

Error Code	Test Result	Description/Recommendation
	PASS	The circuit pack initializes correctly. 1. Run the short test sequence.
Any	NO BOARD	This is normal if the test is being done when (a) the board is not physically in the system or (b) the system is booting up. Otherwise, there is some inconsistency between the physical configuration and the data kept in the system. 1. Verify that the board is physically in the system. 2. Verify that the system is not in a stage of booting up. 3. Retry the command at 1-minute intervals for a maximum of 5 times.

IP Address Query Test #1371

This test is destructive.

The Media Processor has two interfaces for configuring the board: through the NT PC interface, and the SAT via CCMS messages. The SAT via CCMS is the only approved interface. However, the NT PC interface cannot easily be disabled. It is possible that changes can be made via the NT PC interface that cause the Media Processor board to be inconsistent with DEFINITY translation. The area of concern is the IP address, subnet mask, and gateway translation.

This test sends the Media Processor the IP address, subnet mask, and gateway translation (IP parameters). If the parameters do not match DEFINITY translation, the new values are written into the Windows registry, and the NT PC asks the maintenance sub-system to reboot the board. The board goes through a physical board removal and insertion.

When this test fails, it is an indication that an illegal change was made and the customer should be notified. Also, writing the IP address parameters to the registry requires NT to reboot. If the IP addresses match, there is no need to update the registry and reboot NT.

Table 10-401. TEST #1371 IP Address Query Test

Error Code	Test Result	Description/Recommendation
	ABORT	Internal system error 1. Retry the command at 1-minute intervals a maximum of 5 times.
2100	ABORT	Insufficient system resources to run this test. 1. Retry the command at 1-minute intervals a maximum of 5 times.
2801	ABORT	Unable to find IP address data for this location. Verify that the board is administered.
2807	ABORT	The board is administered, but not enabled in the change ip-interfaces form.
	FAIL	The IP address, subnet mask, and gateway translation parameters do not match DEFINITY translations. After the new values are written into the Windows registry, the NT PC must go through a reboot. The board goes through a physical board removal and insertion. 1. If the problem persists, replace the circuit pack.
	PASS	Translation data matches the Windows Registry.

Ping Test (#1379)

This test is non-destructive

This test verifies that the MedPro circuit pack can communicate to other nodes on the LAN.

This test pings the gateway IP address as defined on the **IP Interface** form.

If the PING is successful, this test looks at the PING round trip delay. If a round trip delay of greater than 4 seconds is reported, a separate error is logged. Excessive round trip delays do not take the MedPro out of service.

Services can execute the standard PING command using the C-LAN board address and MedPro IP address to see the actual round-trip delay. (See **ping** commands).

This test is a nondestructive test. It runs because of in-line errors, during periodic and schedule maintenance, and on demand.

Table 10-402. TEST #1379 Ping Test

Error Code	Test Result	Description/Recommendation
1, 2	ABORT	Internal Error. 1. Retry the command at 1-minute intervals a maximum of 3 times.
7	ABORT	Destination unreachable. 1. Verify that at least one destination reachable through this port is up. 2. Repeat the test. 3. If the test still aborts, escalate the problem.
2000	ABORT	Response to the test was not received from the Media Processor circuit pack within the allowable time period. 1. If this result occurs repeatedly, attempt to reset the circuit pack. Reset the circuit pack by issuing the busyout board UUCSS and the reset board UUCSS commands. 2. If this result occurs again, replace the circuit pack.
2012	ABORT	Internal system error. 1. Retry the command at 1-minute intervals a maximum of 3 times.

Continued on next page

Table 10-402. TEST #1379 Ping Test — *Continued*

Error Code	Test Result	Description/Recommendation
2100	ABORT	The necessary system resources to execute the test could not be allocated. 1. Retry the command at 1-minute intervals a maximum of 5 times.
2500	ABORT	Internal system error. 1. Retry the command at 1-minute intervals a maximum of 3 times.
2801	ABORT	No IP address defined. Verify IP Interfaces translations and retest.
2802	ABORT	Different IP address pinged than software had allocated for the test. 1. Retry the command at 1-minute intervals a maximum of 3 times.
2805	FAIL	The number of pings received did not match the number sent (normally one ping sent). This means that no ping responses were received from the gateway defined on the ip-interfaces form for the Media Processor. 1. Retry the command at 1-minute intervals a maximum of 3 times.
2807	ABORT	The board is administered, but not enabled in the change ip-interfaces form.
7, 89, 1007	FAIL	Ping to the destination failed through this port due to the destination down. 1. Verify that at least one destination reachable through this port is up. 2. Once verified, execute test port UUCSSpp command to verify that the H.323 Signaling Group Ping Test (#1387) passes.
	PASS	Ping through this port successful.

NT Reset Test (#1381)

This test is destructive.

This test resets the circuit pack. The test is highly destructive and can only be initiated by a system technician-demanded **reset board UUCSS** command.

Table 10-403. TEST #1381 NT Reset Test

Error Code	Test Result	Description/Recommendation
None	ABORT	System resources required for this test are not available. 1. Retry the reset board UUCSS command at 1-minute intervals a maximum of 5 times.
1015	ABORT	Port is not out-of-service. 1. Busyout the circuit pack (busyout board UUCSS). 2. Execute the reset board UUCSS command again.
2100	ABORT	System resources required for this test are not available. 1. Retry the reset board UUCSS command at 1-minute intervals a maximum of 5 times.
1	FAIL	The circuit pack failed to reset.
2	FAIL	The circuit pack failed to restart. 1. Execute the reset board UUCSS command again. 2. If the problem persists, replace the circuit pack.
	PASS	The circuit pack initializes correctly. 1. Run the Short Test Sequence.
0	NO BOARD	The test could not relate the internal ID to the port (no board). This could be due to incorrect translations, no board is inserted, an incorrect board is inserted, or an insane board is inserted. 1. Ensure that the board translations are correct. Administer the MEDPROMEDPRO interface if it is not already administered. 2. If the board was already administered correctly, check the error log to determine whether the board is hyperactive. If this is the case, the board is shut down. Reseating the board re-initializes the board. 3. If the board was found to be correctly inserted in step 1, then issue the busyout board UUCSS command. 4. Issue the reset board UUCSS command. 5. Issue the release board UUCSS command. 6. Issue the test board UUCSS long command. This should re-establish the linkage between the internal ID and the port.

NIC Query Test (#1383)

This test is non-destructive.

This test passes if the Ethernet port is connected and you can talk on the network. Otherwise it fails with no fail code or AUX data.

Table 10-404. TEST #1383 NIC Query Test

Error Code	Test Result	Description/Recommendation
None	ABORT	System resources required for this test are not available. 1. Retry the command at 1-minute intervals a maximum of 5 times.
1015	ABORT	Port is not out-of-service. 1. Busyout the circuit pack (busyout board UUCSS). 2. Execute the command again.
2100	ABORT	System resources required for this test are not available. 1. Retry the command at 1-minute intervals a maximum of 5 times.
	FAIL	The Ethernet port is not connected and you cannot talk on the network.
	PASS	The Ethernet port is connected and you can talk on the network
0	NO BOARD	The test could not relate the internal ID to the port (no board). This could be due to incorrect translations, no board is inserted, an incorrect board is inserted, or an insane board is inserted. 1. Ensure that the board translations are correct. Administer the MedPro interface if it is not already administered. 2. If the board was already administered correctly, check the error log to determine whether the board is hyperactive. If this is the case, the board is shut down. Reseating the board re-initializes the board. 3. If the board was found to be correctly inserted in step 1, then issue the busyout board UUCSS command. 4. Issue the reset board UUCSS command. 5. Issue the release board UUCSS command. 6. Issue the test board UUCSS long command. This should re-establish the linkage between the internal ID and the port.

MEDPROPT (TN802/TN2302 MED PRO DSP PORT)

MO Name (in Alarm Log)	Alarm Level	Initial Command to Run	Full Name of MO
MEDPROPT	MINOR/ WARNING	test port UUCSS or PCSS [short/long] [repeat#] | [clear]	TN802/TN2302 MEDPRO DSP PORT

The MEDPROPT maintenance object monitors the health of the MEDPRO digital signal processors (DSPs).

The TN802B/TN2302 MAPD (Multi-Application Platform for DEFINITY) Media Processor circuit pack provides the audio bearer channels for H.323 voice over IP calls. One TN802B/TN2302 circuit pack has one MEDPROPT media processing resource. Based on system administration of audio codecs, a MEDPROPT can handle either 31 or 22 simultaneous channels of H.323 audio processing. If the **ip-parameters** form specifies only G.711 mu-law or G.711 a-law as the audio codecs, the MEDPROPT can service 31 channels. If any other codec type (G.723-5.3K, G.723-6.3K, or G.729) is administered, the MEDPROPT can only service 22 channels.

The MEDPROPT is physically made up of 11 individual DSPs, but is treated logically as one port. If individual DSPs on the TN802B/TN2302 MAPD fail, the MEDPROPT remains in-service at lower capacity.

The MEDPROPT is a shared service circuit. It is shared between H.323 trunk channels and H.323 stations. An idle channel is allocated to an H.323 trunk/station on a call-by-call basis.

Error Log Entries and Test to Clear Values

Table 10-405. MEDPROPT Error Log Entries

Error Type	Aux Data	Associated Test	Alarm Level	On/Off Board	Test to Clear Value
0[1]	0	Any	Any	Any	test board UUCCSS
1(a)	ANY	DSP Capacity Test (#1382)		ON	test board UUCCSS l r5
18(b)	0	busyout port UUCSS	WARNING	OFF	release port UUCCSS

Continued on next page

Table 10-405. MEDPROPT Error Log Entries — *Continued*

Error Type	Aux Data	Associated Test	Alarm Level	On/Off Board	Test to Clear Value
258(c)	ANY	DSP Capacity Test (#1382)	WARNING	ON	test board UUCCSS l r5
513(d)		DSP Capacity Test (#1382)	MINOR	ON	test port UUCCSSpp
515(e)	ANY	DSP Capacity Query Test (##1382)	MINOR	ON	test board UUCCSS l r5
769	Any	TDM NIC Looparound Test (#1380)	MIN	ON	test port UUCCSS l r10
1025(f)	Any				

1 Run the Short Test Sequence first. If all tests pass, run the Long Test Sequence. Refer to the appropriate test description and follow the recommended procedures.

Notes:

a. **Error Type 1** - For the TN802B only, this error type indicates that less than three DSPs are out of service (OOS), and no alarm is raised. The Aux Data field contains the number of DSPs that are Out of Service (OOS).

b. **Error Type 18** - the MEDPRO has been busied out by **busyout port UUCSS**.

   1. Release the port (**release port UUCSS**).

c. **Error Type 258** - For the TN802B only, this error type indicates that more than three, but less than 9 DSPs are out of service (OOS), and a WARNING alarm is raised. The Aux Data field contains the number of DSPs that are Out Of Service (OOS).

d. **Error Type 513** - For the TN2302 only, the port is out of service (OOS) because an associated DSP is bad.

e. **Error Type 515** - For the TN802B only, this error type indicates that all DSPs are out of service (OOS), and a MINOR alarm is raised. The Aux Data field contains the number of DSPs that are Out Of Service (OOS).

f. **Error Type 1025** - The port is out of service (OOS) because of a board level failure. Check for errors/alarms against the board; in particular, ping problems, IP address inconsistency, or board sanity problems.

   1. Verify correct administration.
   2. Check cabling and customer network before replacing circuit pack.

System Technician-Demanded Tests: Descriptions and Error Codes

Investigate tests in the order they are presented in Table 10-406. By clearing error codes associated with the *DSP Capacity Query Test,* for example, you may also clear errors generated from the other test in the testing sequence.

Table 10-406. System Technician-Demanded Tests

Order of Investigation	Short Test Sequence	Long Test Sequence	D/ND[1]
DSP Capacity Query (#1382)		X	ND
TDM NIC Looparound Test (#1380)		X	ND
Port Status Test (#1407)	X	X	ND

1 D = Destructive; ND = Nondestructive

DSP Capacity Query Test (#1382)

This test is non-destructive

If you have the TN802B

When using theTN802B, this test polls the circuit pack for the number of failed DSPs. If all DSPs are functional, the test passes and the board is operating at maximum capacity. If any DSPs have failed, the test fails and reports the number of failed DSPs.

A failure of 3 or fewer DSPs does not result in an alarm. A failure of more than 3 and up to 8 DSPs results in a warning alarm. A failure of more than 8 DSPs results in a minor alarm. In all cases, except when all DSPs fail, the MEDPROPT continues to provide reduced capacity.

If you have the TN2302

When using the TN2302 this test polls the circuit pack for the state of health of a specific DSP. If the DSP is bad an error will be logged and the board will be polled again. If the circuit pack is still failing, the DSP will be taken out of service and a MINOR alarm will be raised.

Table 10-407. DSP Capacity Query Test (#1382)

Error Code	Test Result	Description/Recommendation
2000	ABORT	Response to the test was not received within the allowable time period. 1. Retry the command at 1-minute intervals a maximum of 3 times.
2100	ABORT	Could not allocate the necessary system resources to run this test. 1. Retry the command at 1-minute intervals a maximum of 3 times.
2500	ABORT	Internal system error 1. Retry the command at 1-minute intervals a maximum of 3 times.
1-11	FAIL	Some DSPs on the circuit pack have failed. The FAIL code is the number of bad DSPs reported (TN802B only).
	FAIL	For the TN2302 only, the DSP failed. If it continues to fail, it will be taken out of service.
	PASS	All 11 DSPs are functioning and in-service.
0	NO BOARD	No board was detected by the test. 1. Check the Error Log for wrong board (Error Type 125) or no board (Error Type 131). Resolve either of these issues, if applicable. 2. Check that the board is properly translated and inserted. If so, check for hyperactivity. If hyperactive, use the reset board UUCSS command. 3. Run the test again. If it fails, the circuit pack may be bad. Replace the circuit pack and retest.

TDM NIC Looparound Test (#1380)

This test is non-destructive

This test sets up a loopback path from the TDM bus out to the NIC edge of the Media Processor and back to the TDM bus. The loopback is established by setting up the outbound IP connection to send IP packets to the MedPro's own IP address. The tone generator places a test tone (440Hz) onto a timeslot. The timeslot is listened to by the Media Processor board. The tone is routed through the TAP802/2302 DSP farm, where it may undergo transcoding to G.723, etc. The tone is looped back at the Network interface and back through the TAP802/2302 where it is converted back into standard PCM. The tone is placed onto a TDM timeslot and detected by a tone detector port. The test passes if 440Hz is reported by the tone detector

Table 10-408. TDM NIC Looparound Test (#1380)

Error Code	Test Result	Description/Recommendation
1002	ABORT	The system could not allocate timeslots for the test. The system may be under heavy traffic conditions or it may have timeslots out of service due to TDM-BUS errors. 1. If system has no TDM-BUS errors and is not handling heavy traffic, retry the command at 1-minute intervals a maximum of 3 times. 2. If system has TDM-BUS errors, clear any errors, and retry the command at 1-minute intervals a maximum of 3 times. 3. If the command continues to abort, escalate the problem.
1003	ABORT	The system could not allocate a tone receiver for the test. The system may be oversized for the number of Tone Detectors present or some Tone Detectors may be out of service. 1. Resolve any TTR-LEV errors. Even if there are no TTR-LEV errors, there may not be a Tone Detector available on the network that contains the circuit pack being tested. Verify that there is at least one Tone Detector on this network. This does not harm the system. 2. Resolve any TONE-PT errors. 3. If neither condition exists, retry the command at 1-minute intervals a maximum of 3 times.
2000	ABORT	Response to the test was not received in the allowable time period. 1. Retry the command at 1-minute intervals a maximum of 3 times.
2100	ABORT	Could not allocate the necessary system resources to run this test. 1. Retry the command at 1-minute intervals a maximum of 3 times.
2500	ABORT	Internal system error. 1. Retry the command at 1-minute intervals a maximum of 3 times.
2801	ABORT	The TN802B/TN2302 Media Processor board has not been administered on the ip-interfaces form.

Continued on next page

Table 10-408. TDM NIC Looparound Test (#1380) — *Continued*

Error Code	Test Result	Description/Recommendation
ANY	FAIL	The test did not detect the test tone through the looparound connection. 1. Test the tone-clock in the port network that contains the media processor under test. 2. If the tone-clock is healthy, test the media processor board again. 3. If the test continues to fail, replace the media processor board.
	PASS	The board is functioning properly.
0	NO BOARD	No board was detected by the test. 1. Resolve either wrong board (Error 125) or no board (Error 131) issues, if applicable. 2. Check that the board is properly translated and inserted. If so, check for hyperactivity (Error 1538). If hyperactive, use the reset board UUCSS command. 3. Run the test again. If it fails, the NCE chip on board may be bad. Replace the board and retest.

Port Status Query Test (#1407)

This test is non-destructive

This test queries the Port status.

Table 10-409. port Status Query Test (#1407)

Error Code	Test Result	Description/Recommendation
1	ABORT	This port is Out of service (OOS) due to: ■ A board level problem, for example no IP address has been translated for this location. ■ A DSP hardware problem (See Test (#1380) and Test (#1382).
2	ABORT	This port has been made maintenance busy
1002	ABORT	The system could not allocate timeslots for the test. The system may be under heavy traffic conditions or it may have timeslots out of service due to TDM-BUS errors. 1. If system has no TDM-BUS errors and is not handling heavy traffic, retry the command at 1-minute intervals a maximum of 3 times. 2. If system has TDM-BUS errors, clear any errors, and retry the command at 1-minute intervals a maximum of 3 times. 3. If the command continues to abort, escalate the problem.
2000	ABORT	Response to the test was not received in the allowable time period. 1. Retry the command at 1-minute intervals a maximum of 3 times.
2100	ABORT	Could not allocate the necessary system resources to run this test. 1. Retry the command at 1-minute intervals a maximum of 3 times.
2500	ABORT	Internal system error. 1. Retry the command at 1-minute intervals a maximum of 3 times.

Continued on next page

Table 10-409. port Status Query Test (#1407) — *Continued*

Error Code	Test Result	Description/Recommendation
	FAIL	Unable to get status for this port. Verify that this board has been administered correctly, and that there are no alarms against this board.
	PASS	The board is functioning properly and the port is in-service and available.
0	NO BOARD	No board was detected by the test. 1. Resolve either wrong board (Error 125) or no board (Error 131) issues, if applicable. 2. Check that the board is properly translated and inserted. If so, check for hyperactivity (Error 1538). If hyperactive, use the reset board UUCSS command. 3. Run the test again. If it fails, replace the board and retest.

MEM-BD (Memory)

MO Name (in Alarm Log)	Alarm Level	Initial Command to Run	Full Name of MO
MEM-BD	MAJOR	test memory l c	Memory
MEM-BD (a)	WARNING	test memory sh c	Memory
MEMORY (b)	MAJOR	test memory a/b sh c	Memory

NOTE:
For memory problems on systems with a TN2404/TN790 RISC processor circuit pack, see “PR-MEM.”

Notes:

a. Non-TN2404/TN790 is on the processor circuit pack and not on a separate memory circuit pack. The maintenance object is “MEMORY” and not “MEM-BD.” However, all references to MEM-BD in this section are applicable to “MEMORY” as well.

   The Memory contains the DEFINITY software and firmware. The Processor circuit pack is the most critical component of all system operations.

b. Non-TN2404/TN790 systems contain memory that is integrated with the processor. For testing purposes, the circuit pack is logically separated into PR-MAINT, PROCR, and MEMORY. This means that a memory problem on 386 systems requires that the Processor be replaced. 386 systems contain two types of memory: Flash ROM and DRAM. Flash ROM is permanent memory that contains the boot image, PI firmware, and PACCON firmware. This type of memory is not erased during circuit pack resets. It can be reprogrammed only via **upgrade software**. DRAM is used for software data storage, and it changes constantly. DRAM loses its value during circuit pack resets. Both types of memory are present on the Processor circuit pack. The diagnostics run appropriate tests on both memories.

   For all system activity, the Processor must be able to access the Memory. If the Processor cannot do this, the system goes into SPE-down mode. In SPE-down mode, fatal Memory errors may show up as Processor errors. This merely indicates that the Processor and the Memory are very closely linked as a matter of course.

   If the initialization diagnostics fail, refer to the “Procedure for SPE-Down Mode” section in Chapter 4, ‘‘Initialization and Recovery’’.

   Memory faults usually indict the Processor circuit pack (TN2404/TN790) or the CPP1 circuit pack, however the problem may be on the TN786B.

Error Log Entries and Test to Clear Values

Table 10-410. MEM-BD (Memory) Memory Error Log Entries

Error Type	Aux Data	Associated Test	Alarm Level	On/Off Board	Test to Clear Value
0[1]	0	Any	Any	Any	test memory a/b l r 1
1-256	Any	Read All Memory Test (#85)	MAJOR	ON	test memory a/b l r 5
257-512 (b)	Any	Read All Memory Test (#85)	MAJOR	ON	test memory a/b l r 1
513 (c)	0	Memory Detection/ Test (#87)	MAJOR	ON	test memory a/b r 3
769 (d)	Any	Text Checksum Test (#86)	MAJOR	OFF/ON	test memory a/b l r 2
1025 (e)	Any	Memory Functional Test (#332)	MAJOR	ON	test memory a/b l r 1

1 Run the Short Test Sequence first. If all tests pass, run the Long Test Sequence. Refer to the appropriate test description and follow the recommended procedures.

Notes:

a. The “clear” option can replace the “repeat” option in **test memory**. For a High or Critical Reliability system, the carrier (a or b) must be specified. In all other systems, there is no need to specify the carrier.

b. The Read All Memory Test (#85) failed. Refer to the FAIL section of this test. The error is associated with MEM-BD 1.

c. The Memory Error Detection Test (#87) failed. Refer to the FAIL section of this test. The error is associated with MEM-BD 1.

d. The Text Checksum Test (#86) failed. Refer to the FAIL section of this test. The error is associated with MEM-BD 1 and is an ON board alarm.

e. There are Functional Test errors against both the Processor circuit pack and Memory. This test is run only on the Standby SPE in a High or Critical Reliability system. On other systems or on the Active SPE, the test is run only via a **reset system 4** or a **reset system 5**.

System Technician-Demanded Tests: Descriptions and Error Codes

Always investigate errors in the order in which they are presented in Table 10-411. By clearing error codes associated with the *Read All Memory Test,* for example, you may also clear errors generated from other tests in the testing sequence.

Table 10-411. MEM-BD (Memory) Order of Investigation

Order of Investigation	Short Test Sequence	Long Test Sequence	D/ ND[1]
Processor Non-maskable Interrupt Test (#82)(a)	X	X	ND
Processor ROM Checksum Test (#80) (a)	X	X	ND
Processor Software Initiated Interrupt Test (#77) (a)	X	X	ND
Processor Sanity Timer Test (#83) (a)		X	D
MTP Outpulse Relay Test (#102) (b)	X	X	ND
MTP Analog Loop Around Test (#103) (b)	X	X	ND
MTP Sanity Handshake Test (#106) (b)	X	X	ND
MTPSAT Loop Around Test (#228) (b)	X	X	ND
MTP Aux Loop Around Test (#229) (b)	X	X	ND
MTP Reset Test (#101) (b)		X	D
MTP Dual Port Ram Test (#104) (b)		X	D
Read All Memory Test (#85)		X	ND
Memory Error Detection Test (#87)	X	X	ND
Text Checksum Test (#86)		X	ND
Memory Functional Test (#332) (c)		X	D
Memory Board Check Test (#631)	X	X	ND

1 D = Destructive; ND = Nondestructive

Notes:

a. Refer to PROCR (Processor) Maintenance documentation for a description of these tests [386 systems only].

b. Refer to PR-MAINT (Maintenance/Tape Processor) Maintenance documentation for a description of these tests [386 systems only].

c. This test is run only on the Standby SPE in a High or Critical Reliability system. On other systems or on the Active SPE, the test is run only via a **reset system 4** command or a **reset system 5** command.

Read All Memory Test (#85)

This test is a nondestructive test. The test reads every memory location in memory and writes it back. A failure of this test indicates a failure in the Processor or Memory circuit pack.

Table 10-412. TEST #85 Read All Memory Test

Error Code	Test Result	Description/Recommendation
1029 2014 2015 2016 2017 2018 2020 2022 2024 2025 2051	ABORT	Refer to STBY-SPE Maintenance documentation for a description of these error codes.
1	FAIL	If the system can still provide service, this indicates that the Processor circuit pack or Memory has a problem, but can still function. The error code “1” indicates that MEM-BD 1 is failing the test. 1. Replace the PROCR (Processor circuit pack). (Note that if you replace the Processor circuit pack, you need to obtain a new license file.) **WARNING:** *If the Processor circuit pack must be replaced, and if there is a blank in the Expansion Memory circuit pack slot (that is, in the slot immediately to the right of the Processor circuit pack), remove the blank before removing the circuit pack. Otherwise, the circuit pack and/or the two connectors that are used to connect the Expansion Memory circuit pack (if available) might become damaged.*
	PASS	The Memory is healthy.

Text Checksum Test (#86)

This test is a nondestructive test. The test computes the checksum of the DEFINITY software text module, and it validates the operation of the flash ROM. A failure of this test indicates corruption of the Text.

Table 10-413. TEST #86 Text Checksum Test

Error Code	Test Result	Description/Recommendation
1029 2014 2015 2016 2017 2018 2020 2022 2024 2025 2051	ABORT	Refer to “STBY-SPE” for a description of these error codes.
	FAIL	The system may or may not continue to operate correctly. The system may fail later when some action requires access to the corrupted area of the Text. For a 386 system, the flash ROM should be reprogrammed by **upgrade software**. The memory card should contain the same vintage software that is currently in the system. Refer to the “Software Upgrade” section in Chapter 5, ‘‘Routine Maintenance Procedures’’.
2058	FAIL	**(G3iV1.1-286 system only)**.
	PASS	The checksum is correct.

Memory Error Detection Test (#87)

This test is a nondestructive test. This test determines if the parity circuitry is working. Accordingly, the test determines if parity errors can be detected. The parity circuitry is used to detect DRAM memory failures.

Memory Functional Test (#332)

This test is destructive.

This test ensures that every DRAM memory location can be accessed and changed independently. Running this test wipes out all data in DRAM memory. This test is performed during a **reset system 4** or **reset system 5**. If the test fails during **reset system**, refer to the "Procedure for SPE-Down Mode" section of Chapter 4, "Initialization and Recovery", for the maintenance strategy.

Table 10-414. TEST #332 Memory Functional Test

Error Code	Test Result	Description/Recommendation
1000	ABORT	System resources required to run this test are not available. 1. Repeat the command at 1-minute intervals a maximum of three times.
1029 2014 2015 2016 2017 2018 2020 2022 2024 2025 2051	ABORT	Refer to "STBY-SPE" for a description of these error codes.
	FAIL	The Standby SPE Memory is defective. 1. Repeat the command at 1-minute intervals a maximum of 5 times. 2. The Processor circuit pack should be replaced.
	PASS	The Standby SPE Memory circuit pack(s) is healthy.

Memory Board Check Test (#631)

This test always passes.

MEMORY

MO Name (in Alarm Log)	Alarm Level	Initial Command to Run	Full Name of MO
MEMORY	MAJOR	test memory a/b l c	memory

Refer to MEM-BD (Memory Circuit Pack) for circuit pack level errors.

MIS (Management Information System)

MO Name (in Alarm Log	Alarm Level	Initial Command to Run	Full Name of MO
MIS	WRN	release mis	Management Information System

Management Information System (MIS)/Call Management System (CMS) MO is used for administering MIS translations, such as trunks and stations. There are no hardware failures associated with this MO.

To diagnose MIS link hardware errors and alarms, see PI-LINK (Processor Interface Link) and PI-SCI (System Communication Interface) maintenance information.

MIS/CMS is an adjunct processor that collects ACD data sent from the system. To change MIS translations, enter **busyout mis** at the terminal. When the MIS is busied out, the system stops sending ACD data to the MIS, and a Warning alarm is raised. When finished, enter **release mis**. This clears the Warning alarm and allows the switch to send ACD data to the MIS.

Error Log Entries and Test to Clear Values

Management Information System Error Log Entries

Error Type	Aux Data	Associated Test	Alarm Level	On/Off Board	Test to Clear Value
0[1]	0	Any	Any	Any	release mis
18(a)	0	busyout mis	WARNING	ON	release mis

1 Run the Short Test Sequence first. If all tests pass, run the Long Test Sequence.

Note:

a. When **busyout MIS** is issued, no data is sent to the MIS/CMS. To allow data to be sent to MIS/CMS, issue **release mis** from the terminal.

MODEM-BD (Modem Pool Circuit Pack)

MO Name (in Alarm Log)	Alarm Level	Initial Command to Run[1]	Full Name of MO
MODEM-BD	MIN	test board PCSS sh	Modem Pool Circuit Pack
MODEM-BD	WRN	test board PCSS sh	Modem Pool Circuit Pack

1 Where P is the port network number (1 for PPN and 2 or 3 for EPN); C is the carrier designation (for example, A, B, C, D, or E); and SS is the address of the slot in the carrier where the circuit pack is located (for example, 01, 02, ..., etc.).

Refer to XXX-BD (Common Port Circuit Pack) Maintenance documentation for circuit pack level errors. See also MODEM-PT (Modem Pool Port) Maintenance documentation for related port information.

MODEM-PT (Modem Pool Port)

MO Name (in Alarm Log)	Alarm Level	Initial Command to Run[1]	Full Name of MO
MODEM-PT	MINOR	test port PCSSpp sh	Modem Pool Port

1 Where P is the port network number (1 for PPN and 2 or 3 for EPN); C is the carrier designation (for example, A, B, C, D, or E); SS is the address of the slot in the carrier where the circuit pack is located (for example, 01, 02, ..., etc.); and pp is the 2-digit port number (for example, 01).

The Modem Pool Port provides an interface for digital and analog data communication devices or ports connected to the PBX. It may be thought of as a PBX data communications “conversion resource” because it converts analog modem signals typically used in the telephone network into digital signals that are compatible with the internal PBX network and vice versa.

There may be a number of these conversion resources available in the PBX, each assigned to one of five available Modem Pool Groups. Only one conversion resource is used per data connection. The PBX software usually adds the conversion resource into a data connection if it determines that it is necessary for the call. Typical connections that include Modem Pool conversion resources include data calls from Analog Line or Central Office Trunk ports to any digital port or Digital Line or Trunk ports to any analog port. An example of a Data Module to Central Office Trunk connection using a Modem Pool conversion resource is shown in Figure 10-69 on page 10-1098. When a local data call originates from an analog port normally used for voice service only and terminates on a digital port, a Data Origination access code must be dialed before the extension number for the Modem Pool conversion resource to be included in the connection.

Refer to Figure 10-69 on page 10-1098 while reading the following paragraph.

Each Modem Pool conversion resource contains two ports. One of these, an Analog Line Port, is connected (via the PBX network) to the Analog Line or Central Office Trunk Port that is the source of the modem signal. The second port is referred to as the digital port and is connected (again through the PBX network) to the Digital Line or Trunk port associated with the Data Module in the connection. The analog modem signals enter the analog port of the conversion resource in standard Pulse Code Modulation (PCM) format but are converted into Data Communications Protocol (DCP) format before going to the Digital Line or trunk in the connection.

There are two primary types of Modem Pool conversion resources available: an Integrated Pooled Modem and a Combined Modem Pool. The integrated TN758 Pooled Modem circuit pack contains two independent 300 or 1200 baud conversion resources. Each conversion resource contains two interfaces to the PBX digital network: an analog port and a digital port. The analog port is connected through the PBX network to the analog line or trunk port containing the analog modem signals. The digital port connects through the PBX network to the digital line or trunk port in the call. Figure 10-69 shows a typical end-to-end connection using a conversion resource on the integrated Pooled Modem circuit pack.

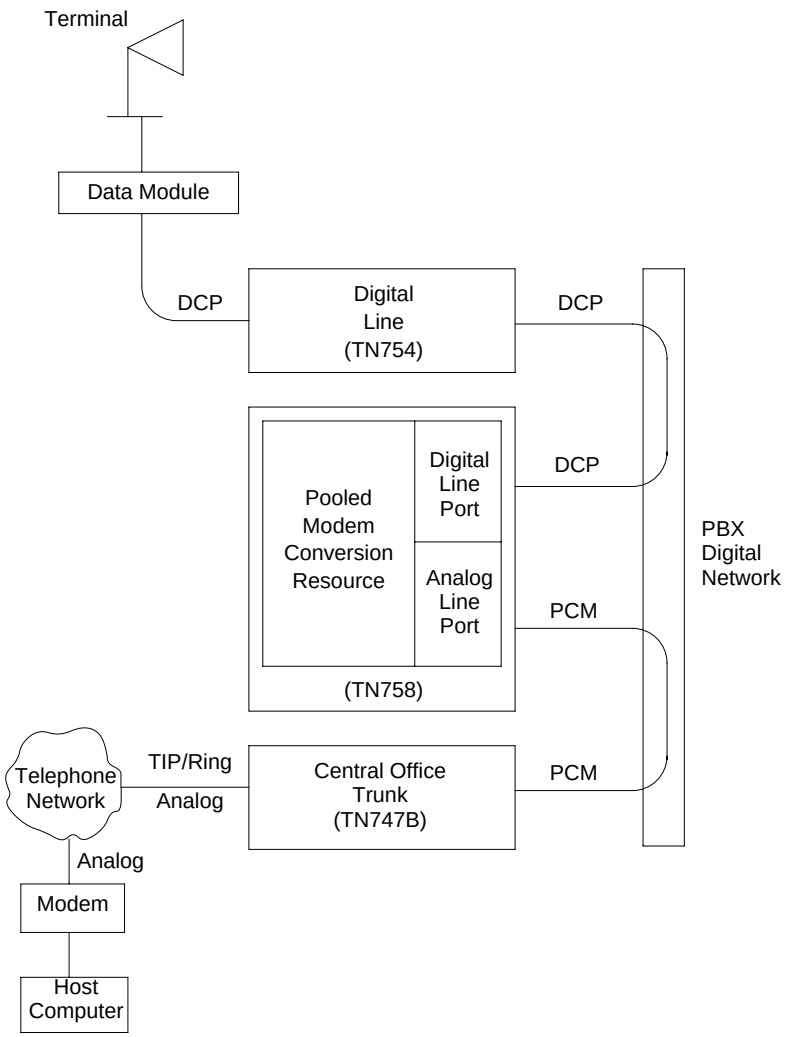

Figure 10-69. Typical Modem Pool Switched Connection with Integrated Pooled Modem

The Combined Modem Pool conversion resource is the second type available. The function served by the Combined Modem Pool is similar to that of the integrated Pooled Modem circuit pack, but the physical implementation is much different. It has the advantage of supporting any speed the external modem can support. The integrated Pooled Modem circuit pack can only support 300 or 1200 baud transmission rates. The Combined Modem Pool conversion resource consists of a port on a TN742 or TN746 Analog Line circuit pack, an external modem, a Data Module, and a port on a TN754 Digital Line circuit pack. The tip and ring interface of the Analog Line is connected to the modem, the EIA 232C interface of the modem connects to the Data Module, and the DCP interface on the Data Module is connected to the Digital Line port.

The analog modem signals pass through the Analog Line port to the modem. The modem converts these to EIA 232C signals which are passed on to the Data Module. The Data Module further converts the signals to the DCP protocol for the Digital Line port which passes the signals on to the PBX network. See Figure 10-70 on page 10-1100.

Certain customer-reported troubles may provide important information for troubleshooting Modem Pool problems. For example, if the customer tries to make a data call requiring a Modem Pool conversion resource, and the Modem Pool and Data Module speeds or other options don't match, they receive a "CHECK OPTIONS" error message on the terminal. If this happens, the Modem Pool administration and customer Data Module option settings should be checked. In addition, if the Modem Pool is a Combined type, option settings should be checked on the external Modem and Data Module making up the Combined Modem Pool. The cabling and connections between the Digital Line port, Data Module, Analog Line port, and Modem should be checked between the Combined Modem Pool components.

There are three types of commands that can be used to test Modem Pool circuits: **test port, test modem-pool #,** and **test board.** The **test port** command is generally the first test to run after the Error Log is evaluated and an entry is found for a Modem Pool port. The **test modem-pool #** command runs the same tests as the **test port short** command performed on a Modem Pool port. However, the **test modem-pool #** command can automatically test all ports in the Modem Pool group number specified in #. The **test board** command performs the same tests as **test port** and **test modem-pool #** plus additional tests for circuits common to the entire circuit pack. Refer to the XXX-BD (Common Port Circuit Pack) Maintenance documentation for information on additional tests performed with **test board** (#50, #52, and #53).

If the Modem Pool port or group being tested with **test modem-pool #** contains Combined Modem Pools, the ports on the associated TN742 or TN746 Analog Line circuit pack and the TN754 Digital Line circuit pack are tested as a group. Note, however, that Combined Modem Pools are not tested with the tests described in this section and the repair information related to Tests # 96, 97, 98, and 99 is not applicable. The Analog port of the Combined Modem port is tested with Analog port tests (that is, Tests #6, #47, #35, #48 and #36), and the Digital port of the Combined Modem port is tested with TDMODULE/PDMODULE tests

(that is, Tests #9, #13, #17 and #175). Therefore, use the repair procedures outlined in the ANL-LINE, ANL-16-L, ANL-NE-L, and TDMODULE/PDMODULE Maintenance documentation when interpreting the results of the execution of **test modem-pool #** on Combined Modem Pools.

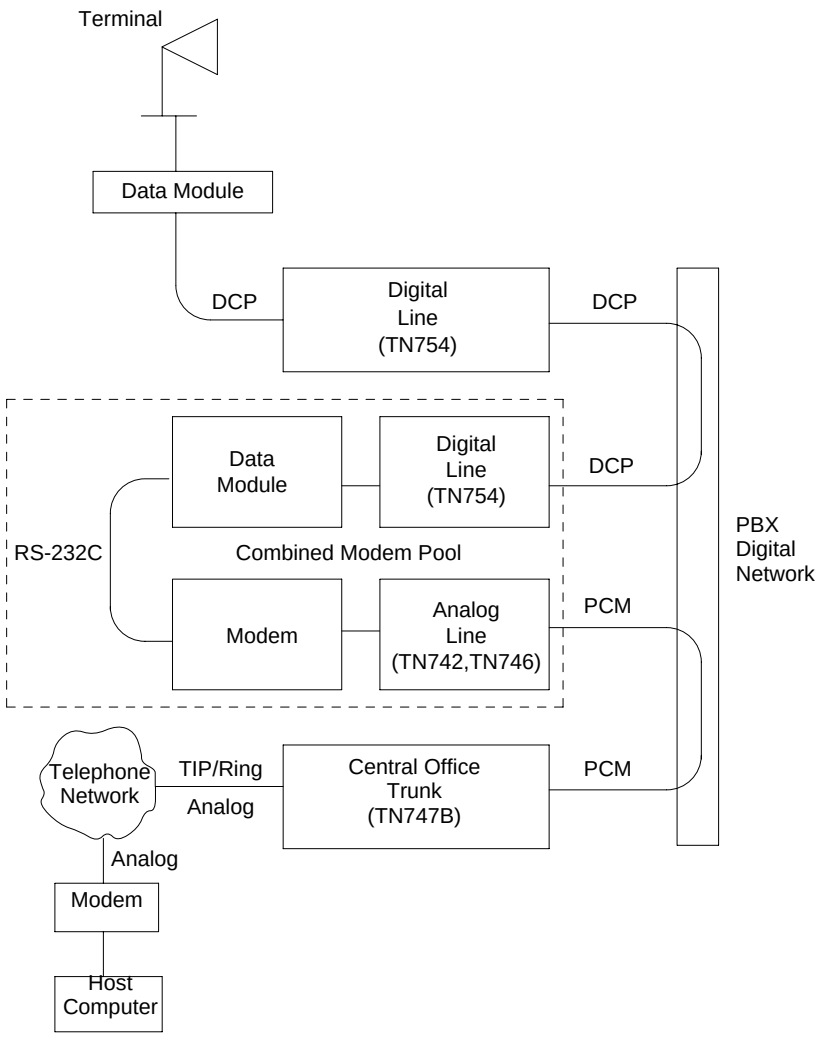

Figure 10-70. Typical Modem Pool Switched Connection with Combined Modem Pool

Hardware Error Log Entries and Test to Clear Values

Modem Pool Port Error Log Entries

Error Type	Aux Data	Associated Test	Alarm Level	On/Off Board	Test to Clear Value
0[1]	0	Any	Any	Any	test port PCSSpp sh r 1
18	0	busyout PCSS	WARNING	OFF	release port PCSSpp
130 (a)		None	WARNING	ON	test port PCSSpp sh
257		Conversion Resource Loop Test (#98)	MINOR	ON	test port PCSSpp sh r 3
513		Modem Conference Test(#97)	MINOR	ON	test port PCSSpp l r 3
769		Modem NPE Crosstalk Test (#96)	MINOR	ON	test port PCSSpp l r 3

1 Run the Short Test Sequence first. If all tests pass, run the Long Test Sequence. Refer to the appropriate test description and follow the recommended procedures.

Note:

a. This error type indicates that the circuit pack has been removed or has been insane for more than 21 minutes. To clear the error, reinsert or replace the circuit pack.

System Technician-Demanded Tests: Descriptions and Error Codes

Always investigate tests in the order presented in the table below when inspecting errors in the system. By clearing error codes associated with the *Modem Pool Conference Test,* for example, you may also clear errors generated from other tests in the testing sequence. The tests in this section do not apply to Combined Modem Pool conversion resources. The standard Digital Line and/or Analog Line port tests are run on the ports associated with the Combined Modem Pool. The test descriptions for those maintenance objects (MOs) should be consulted when repairing Combined Modem Pool arrangements.

For example, you may also clear errors generated from other tests in the testing sequence. The tests in this section do not apply to Combined Modem Pool conversion resources. The standard Digital Line and/or Analog Line port tests are run on the ports associated with the Combined Modem Pool. The test descriptions for those maintenance objects (MOs) should be consulted when repairing Combined Modem Pool arrangements.

Order of Investigation	Short Test Sequence	Long Test Sequence	D/ ND[1]
Modem Pool NPE Crosstalk Test (#96)		X	D
Modem Pool Conference Test (#97)		X	D
Modem Pool Conversion Resource Loop Around Test (#98)	X	X	ND
Modem Pool Audits Test (#99)	X	X	ND

1 D = Destructive; ND = Nondestructive

Modem Pool NPE Crosstalk Test (#96)

This test is destructive.

This NPE Crosstalk Test verifies that the NPE is connected only to the desired time slot and is not crosstalking on other time slots. This test operates exactly like Test #6 for other types of port circuits but is performed twice in order to test both NPEs in the Modem Pool Port.

Table 10-415. TEST #96 Modem Pool NPE Crosstalk Test

Error Code	Test Result	Description/Recommendation
	ABORT	System resources required for this test are not available. 1. Retry the command at 1-minute intervals a maximum of 5 times.
1000	ABORT	System resources required to run this test are not available. The port may be in use on a valid call. Determine whether the port is available for testing. 1. Retry the command at 1-minute intervals a maximum of 5 times.
1001	ABORT	System resources required to run this test are not available. 1. Retry the command at 1-minute intervals a maximum of 5 times.

Continued on next page

Table 10-415. TEST #96 Modem Pool NPE Crosstalk Test — *Continued*

Error Code	Test Result	Description/Recommendation
1002	ABORT	The system could not allocate time slots for the test. The system may be under heavy traffic conditions or it may have time slots out-of-service due to TDM-BUS errors. Refer to TDM-BUS (TDM Bus) Maintenance documentation to diagnose any active TDM-BUS errors. 1. If the system has no TDM-BUS errors and is not handling heavy traffic, repeat the test at 1-minute intervals a maximum of 5 times.
1003	ABORT	The system could not allocate a tone receiver for the test. The system may be oversized for the number of Tone Detectors present or some Tone Detectors may be out-of-service. 1. Look for TTR-LEV errors in the Hardware Error Log. If present, refer to TTR-LEV (TTR Level) Maintenance documentation. 2. Look for TONE-PT errors in the Hardware Error Log. If present, refer to TONE-PT (Tone Generator) Maintenance documentation. 3. If neither condition exists, retry the test at 1-minute intervals a maximum of 5 times.
1004	ABORT	The port has been seized by a user for a valid call. Determine whether the port is available for testing. 1. Retry the command at 1-minute intervals a maximum of 5 times.
1020	ABORT	The test did not run due to a previously existing error on the specific port or because of a more general circuit pack error. 1. Examine the Hardware Error Log for existing errors against this port or the circuit pack, and attempt to diagnose the previously existing errors.
2000	ABORT	A response to the test request was not received within the allowable time period. 1. Retry the command at 1-minute intervals a maximum of 5 times.
2100	ABORT	System resources required for this test are not available. 1. Retry the command at one-minute intervals a maximum of 5 times.

Continued on next page

Table 10-415. TEST #96 Modem Pool NPE Crosstalk Test — *Continued*

Error Code	Test Result	Description/Recommendation
6000	ABORT	System resources needed to complete the test could not be allocated for the digital section of the Modem Pool conversion resource. Ordinarily, this means the conversion resource or other hardware used during the test was in use. 1. Wait one minute and attempt the test again. 2. If it is absolutely necessary to test the conversion resource, the call must be dropped by issuing a **busyout port PCSS** command against the conversion resource. Issue the **release port PCSS** command. The busyout and release of the port drop any existing calls on that port. 3. Run the test again. 4. If the same error occurs while the conversion resource is idle, busyout and release both Modem Pool conversion resources on the TN758 Pooled Modem circuit pack containing the conversion resource under test. This action drops any existing calls on that circuit pack. 5. If the test continues to abort, replace the Pooled Modem circuit pack and retest. 6. If the test continues to abort with this error code after circuit pack replacement, escalate the problem.
6001	ABORT	System resources needed to complete the test could not be allocated for the analog section of the Modem Pool conversion resource. 1. Follow the test procedures for the previous error code.
NONE	FAIL	The test failed. This error is internal to the Pooled Modem circuit pack and does not involve external equipment or interfaces. 1. Busyout both of the TN758 Pooled Modem conversion resources on the circuit pack containing the failing conversion resource. 2. If the test continues to fail, replace the Pooled Modem circuit pack and retest. 3. If the circuit pack fails after replacement, escalate the problem.

Continued on next page

Table 10-415. TEST #96 Modem Pool NPE Crosstalk Test — *Continued*

Error Code	Test Result	Description/Recommendation
ANY	FAIL	The NPE of the tested port was found to be transmitting in error. This condition causes noisy and unreliable connections. 1. If the remaining ports are currently not in use (that is, yellow LED is off), attempt to reset the circuit pack. Then repeat the test. 2. If the test fails again, replace the circuit pack.
	PASS	The port is correctly using its allocated time slots. User-reported troubles on this port should be investigated using other port tests and by examining station, trunk, or external wiring.

Modem Pool Conference Test (#97)

This test is destructive.

This test checks most of the switching and gain control functions provided by the NPE circuit in the analog section of the conversion resource. This test conferences a 1004-Hz tone through the NPE, looping it back so that it can be verified with a Tone Detector circuit.

Table 10-416. TEST #97 Modem Pool Conference Test

Error Code	Test Result	Description/Recommendation
	ABORT	System resources required for this test are not available.
1000	ABORT	System resources required to run this test are not available. The port may be in use on a valid call. Determine whether the port is available for testing.
1002	ABORT	The system could not allocate time slots for the test. The system may be under heavy traffic conditions or it may have time slots out-of-service due to TDM-BUS errors. Refer to TDM-BUS (TDM Bus) Maintenance documentation to diagnose any active TDM Bus errors. 1. If the system has no TDM-BUS errors and is not handling heavy traffic, repeat the test at one-minute intervals a maximum of 5 times.

Continued on next page

Table 10-416. TEST #97 Modem Pool Conference Test — *Continued*

Error Code	Test Result	Description/Recommendation
1003	ABORT	The system could not allocate a tone receiver for the test. The system may be oversized for the number of Tone Detectors present or some Tone Detectors may be out-of-service. 1. Look for TTR-LEV errors in the Error Log. If present, refer to TTR-LEV (TTR level) Maintenance documentation. 2. Look for TONE-PT errors in the Error Log. If present, refer to TONE-PT (Tone generator) Maintenance documentation. 3. If neither condition exists, retry the test at one-minute intervals a maximum of 5 times.
1004	ABORT	The port has been seized by a user for a valid call. Determine whether the port is available for testing. 1. Retry the command at one-minute intervals a maximum of 5 times.
1020	ABORT	The test did not run due to a previously existing error on the specific port or because of a more general circuit pack error. 1. Examine the Hardware Error Log for existing errors against this port or the circuit pack, and attempt to diagnose the previously existing errors.
2000	ABORT	The response to the test request was not received within the allowable time period.
2012	ABORT	Internal System Error.
2100	ABORT	System resources required for this test are not available.
2103	ABORT	The system could not make the conference connection for the test. 1. Retry the command at one-minute intervals a maximum of 5 times.

Continued on next page

Table 10-416. TEST #97 Modem Pool Conference Test — *Continued*

Error Code	Test Result	Description/Recommendation
4000	ABORT	System resources needed to complete the test could not be allocated. Ordinarily, this means the conversion resource or other hardware used during the test was in use. 1. Wait one minute and attempt the test again. 2. If it is absolutely necessary to test the conversion resource, the call must be dropped by issuing a **busyout port PCSS** command against the conversion resource. Issue the **release port PCSS** command. The busyout and release of the port drop any existing calls on that port. 3. Run the test again. 4. If the same error occurs while the conversion resource is idle, busyout and release both Modem Pool conversion resources on the TN758 Pooled Modem circuit pack containing the conversion resource under the test. This action drops any existing calls on that circuit pack. 5. If the test continues to abort, replace the Pooled Modem circuit pack and retest. 6. If the test continues to abort with this error code after circuit pack replacement, escalate the problem.
65515	ABORT	System resources required for this test are not available. 1. Retry the command at one-minute intervals a maximum of 5 times. 2. Issue the **test port long** command on the port on which the test aborted. If any test aborted or failed, follow recommended maintenance strategy for the appropriate port type (for example, ANL-LINE, DIG-LINE).
NONE	FAIL	The test failed. This error is internal to the Pooled Modem circuit pack and does not involve external equipment or interfaces. 1. Busyout both of the TN758 Pooled Modem conversion resources on the circuit pack containing the failing conversion resource. 2. If the test continues to fail, replace the Pooled Modem circuit pack and retest. 3. If the circuit pack fails after replacement, escalate the problem.

Continued on next page

Table 10-416. TEST #97 Modem Pool Conference Test — *Continued*

Error Code	Test Result	Description/Recommendation
ANY	FAIL	The Network Processing Element (NPE) of the tested port did not conference the tones correctly. This causes noisy and unreliable connections. 1. If the remaining ports are currently not in use (that is, yellow LED is off), attempt to reset the circuit pack. Then repeat the test. 2. If the test fails again, replace the circuit pack.
	PASS	The port can correctly conference multiple connections. User-reported troubles on this port should be investigated using other port tests and by examining station, trunk, or external wiring.

Modem Pool Conversion Resource Loop Around Test (#98)

The Modem Pool Conversion Resource Loop Around Test is set up as follows:

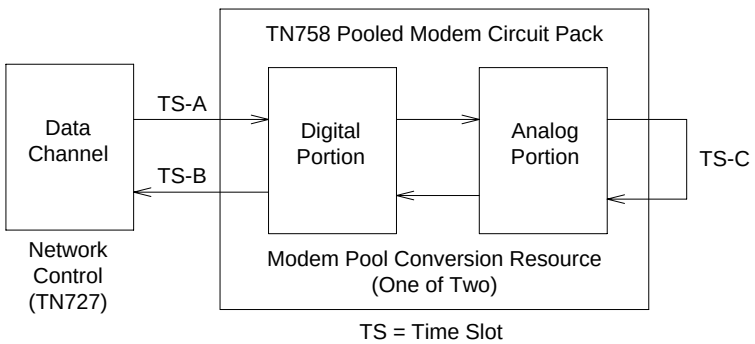

Figure 10-71. Modem Pool Conversion Resource Loop Around Test Set-up

Test data patterns are transmitted from the Network Control Channels 1 or 3 over network time slot A through the digital port, looped around through the analog port via time slot C back to the Network Control Channel circuit via time slot B where the patterns are checked for accuracy. Finally, the test forces a disconnect by breaking the connection between the Data Channel and Modem Pool Port (time slot A) and verifying that the Data Channel and Modem Pool Port go on-hook within the proper time.

This test attempts to allocate a Network Control Channel, Modem Pool Port, and other internal resources. If any of these allocation attempts fail, the test cannot be completed and a specific abort error is reported.

Table 10-417. TEST #98 Modem Pool Conversion Resource Loop Around Test

Error Code	Test Result	Description/Recommendation
NONE	ABORT	Internal System Error. 1. Wait one-minute and try the test again.
5000	ABORT	System resources needed to complete the test could not be allocated for the digital section of the Modem Pool conversion resource. Ordinarily, this means the conversion resource or other hardware used during the test was in use. 1. Wait one minute and attempt the test again. 2. If it is absolutely necessary to test the conversion resource, the call must be dropped by issuing a **busyout port PCSS** command against the conversion resource. Issue the **release port PCSS** command. The busyout and release of the port drop any existing calls on that port. 3. Run the test again. 4. If the same error occurs while the conversion resource is idle, busyout and release both Modem Pool conversion resources on the TN758 Pooled Modem circuit pack containing the conversion resource under test. This action drops any existing calls on that circuit pack. 5. If the test continues to abort, replace the Pooled Modem circuit pack and retest. 6. If the test continues to abort with this error code after circuit pack replacement, escalate the problem.

Continued on next page

Table 10-417. TEST #98 Modem Pool Conversion Resource Loop Around Test — *Continued*

Error Code	Test Result	Description/Recommendation
5001	ABORT	A Network Control Channel could not be allocated for this test. This error is more closely related to the Data Channels (1 or 3 only) on the DATA-CHL circuit pack used for this test than the TN758 Pooled Modem circuit pack itself. Therefore, any hardware testing or replacement activities focus on the DATA-CHL circuit pack. However, the Data Channels on the DATA-CHL circuit pack normally should not be busied out, tested with the **test data-module** command, or reseated in the carrier to clear this error, since this may drop other data calls that may be active at the time. The administration of Data Channels 1 and 3 should be checked if this error occurs. 1. Wait one minute and attempt the test again. 2. If the same error persists after five attempts at one-minute intervals, escalate the problem.
5002	ABORT	The Network Control Channel allocated for this test could not be set to “maintenance busy” status. 1. Follow the repair procedures for Error Code 5001.
5003	ABORT	The test was not able to establish a connection for the digital portion of the Modem Pool Port. 1. Follow the repair procedures for Error Code 5000.
5004	ABORT	The test was not able to allocate the analog portion of the Modem Pool Port. 1. Follow the repair procedures for Error Code 5000.
5005	ABORT	The test was not able to establish a connection for the analog portion of the Modem Pool Port. 1. Follow the repair procedures for Error Code 5000.

Continued on next page

Table 10-417. TEST #98 Modem Pool Conversion Resource Loop Around Test — *Continued*

Error Code	Test Result	Description/Recommendation
5006	FIL	The Modem Pool Port did not respond to the “maintenance activate” message. This error is internal to the Modem Pool circuit pack and does not involve external equipment or interfaces. The test failed. This error is internal to the Pooled Modem circuit pack and does not involve external equipment or interfaces. 1. Busyout both of the TN758 Pooled Modem conversion resources on the circuit pack containing the failing conversion resource. 2. If the test continues to fail, replace the Pooled Modem circuit pack and retest. 3. If the circuit pack fails after replacement, escalate the problem.
5007	ABORT	The Network Control Channel allocated for this test did not respond to the incoming call indication. 1. Follow the repair procedures for Error Code 5001.
5009	ABORT	The Network Control Channel allocated for this test did not handshake correctly. 1. Attempt the test again. 2. If the same error occurs, test the DATA-CHL circuit pack using **test data-module** (refer to the DATA-CHL maintenance strategy). 3. If the DATA-CHL circuit pack tests pass, escalate the trouble report.
5010	FAIL	The Data Loop Around Test failed, indicating a probable problem with the TN758 Pooled Modem circuit pack. 1. Follow the repair procedure for Error Code 5006.
5011	ABORT	The Network Control Channel allocated for this test did not disconnect properly. 1. Follow the repair procedures for Error Code 5001.
5012	ABORT	The digital portion of the tested Modem Pool Port did not disconnect properly. 1. Follow the repair procedures for Error Code 5000.

Continued on next page

Table 10-417. TEST #98 Modem Pool Conversion Resource Loop Around Test *— Continued*

Error Code	Test Result	Description/Recommendation
5013	FAIL	The Modem Pool Port did not respond with an on-hook message when the connection to the Data Channel was broken, indicating a likely problem with the TN758 Pooled Modem circuit pack. 1. Follow the repair procedure for Error Code 5006.
5014	ABORT	The Network Control Channel allocated for this test did not respond correctly to the setup message sent to it after the connection was established. 1. Attempt the test again. 2. If the same error occurs, test the DATA-CHL circuit pack using the **test data-module** command (refer to the DATA-CHL maintenance strategy). 3. If the DATA-CHL circuit pack tests pass, escalate the problem.
5015	ABORT	Data Channels 1 and/or 3 have not been administered. 1. Administer the Data Channels and retest.

Modem Pool Audit Test (#99)

This audit updates the Modem Pool conversion resource status contained in the TN758 Pooled Modem circuit pack's microprocessor. It does not actually test the Pooled Modem circuit pack; therefore, there are no FAIL codes. The audit can only be performed on idle conversion resources. If the conversion resource is in use, the audit aborts.

Table 10-418. TEST #99 Modem Pool Audit Test

Error Code	Test Result	Description/Recommendation
NONE	ABORT	The system was not able to allocate all the necessary resources to execute this test. An ABORT simply indicates that the conversion resource was in use when the audit was performed. No repair action is necessary unless it was known that the conversion resource was actually idle during the test (yellow in-use LED was off) or was busied out before the test was run. If this is the case, a TN758 failure condition may exist and the following procedure should be used: 1. Busyout both of the TN758 Pooled Modem conversion resources on the circuit pack containing the failing conversion resource. 2. If the test continues to abort, replace the Pooled Modem circuit pack and retest. 3. If the circuit pack fails after replacement, escalate the problem.

MMI-BD

MO Name (in Alarm Log)	Alarm Level	Initial Command to Run[1]	Full Name of MO
MMI-BD	MAJOR	test board PCSS l r#	Multimedia Interface Circuit Pack
MMI-BD	MINOR	test board PCSS l r#	Multimedia Interface Circuit Pack
MMI-BD[2]	WARNING	test board PCSS s r#	Multimedia Interface Circuit Pack

1 Where P is the port network number (1 for PPN and 2 or 3 for EPN); C is the carrier designation (for example, A, B, C, or D); and SS is the address of the slot in the carrier where the circuit pack is located (for example, 01, 02, ..., and so forth).

2 Refer to XXX-BD (Common Port Board).

Two circuit packs can be used for multimedia connections:

- "TN787D (or later)"
- "TN2207 and the Expansion Services Module"

TN787D (or later)

The Multimedia Interface Circuit Pack (TN787D or later), also called the MMI pack, provides a number of H.221 protocol terminations for bit streams received from the TDM bus. The Multimedia Interface demultiplexes the H.221 bit stream (audio, video, data, control, and indication signals) and transmits the bit streams onto the TDM bus so that the appropriate circuit packs can process them.

Other resources on the MMI pack are:

- 32 ports
- 4 digital signal processors that manage the 32 resources

NOTE:
Refer to "Troubleshooting MMCH" in Chapter 5, "Routine Maintenance Procedures" for MMCH troubleshooting information.

TN2207 and the Expansion Services Module

The TN2207 circuit pack permits connecting an Expansion Services Module (ESM) shown in Figure 10-72 on page 10-1115.

- Provides T.120 data sharing capability on a MMCH multipoint H.320 video conference
- Each conference participant must have endpoints administered and a personal computer with the H.320 video application installed.
- The Avaya DEFINITY Server must have the ESM installed. See the ‘‘status esm’’ command in Chapter 8, ‘‘Maintenance Commands and Trouble-Clearing Aids’’.

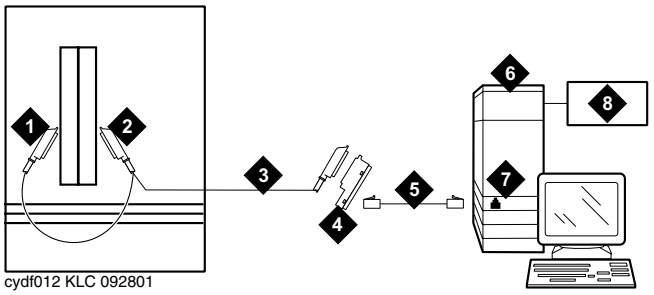

Figure Notes

1. Port B Y-cable connector to a TN787 Multimedia Interface (MMI) circuit pack
2. Port A Y-cable connector to a TN2207 PRI circuit pack
3. 25-pair Y-cable
4. 356A adapter
5. D8W cord connected to 356A adapter port 1
6. Expansion Service Module (ESM)
7. Port B on compatible primary rate interface (PRI) card

Figure 10-72. Typical ESM connections

CAUTION:
The TN2207 circuit pack is the only pack allowing connection of an ESM to the Avaya DEFINITY Server.

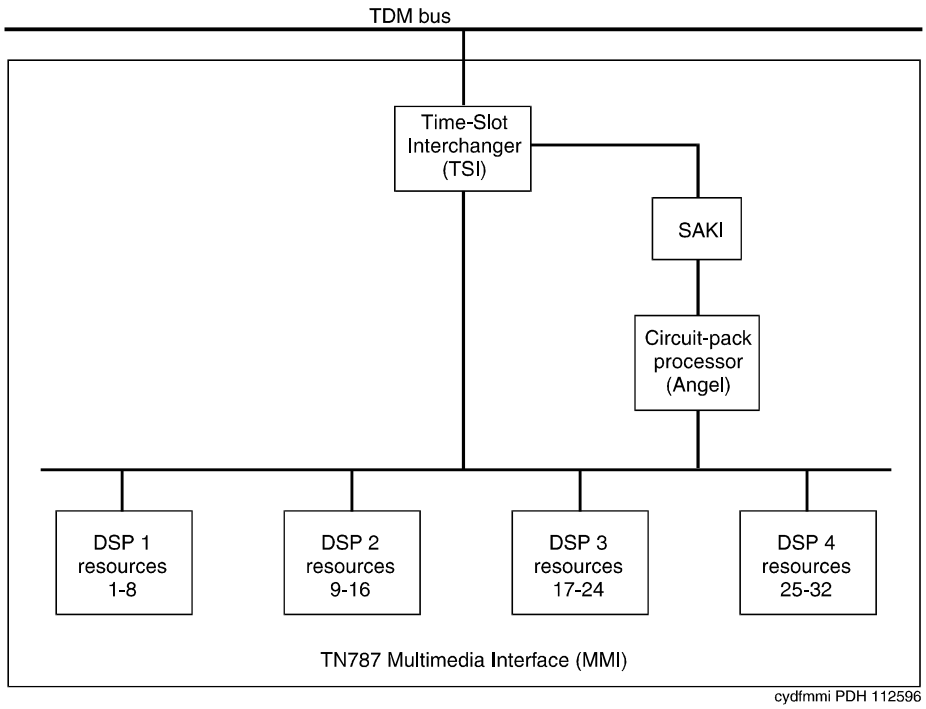

Figure 10-73. TN787 Multimedia Interface (MMI) Circuit Pack

Error Log Entries and Test to Clear Values

Table 10-419. MMI-BD Error Log Entries

Error Type	Aux Data	Associated Test	Alarm Level	On/Off Board	Test to Clear Value
0[1]	0	Any	Any	Any	test board PCSS sh r 1
1 (a)	Any	None	MIN	ON	
18 (b)	0	Busyout board PCSS	WNG	OFF	release board PCSS
217 (c)	0	None	WNG	ON	
257 (d)	65535	Control Channel Loop Test (#52)	MIN	ON	test board PCSS r 3
513 (e)	4352 to 4357	Uplink error from pack			
769 (f)	Any	MMI Synchronization Status Test (#1123)	None		
1281 (g)	Any	Circuit Pack Restart Test (#594)	MAJ	ON	
1538 (h)	Any	Software detected error	MIN	ON	
1793 (i)	ANY	TSI XTalk (#6)	MIN	ON	test board PCSS l r 3
2049 (j)	Any	TSI Loop (#1108)	MAJ	ON	test board PCSS l r 3

1 Run the short test sequence first. If all tests pass, run the long test sequence. Refer to the appropriate test description and follow the recommended procedures.

Notes:

a. The circuit pack stopped functioning or it was physically removed from the system. The alarm logs approximately 11 minutes after the circuit pack has been removed and/or the SAKI Sanity Test (#53) fails.

   If the circuit pack is in the system and the red LED is on, follow the instructions for a red alarm in ''Control and port circuit pack status LEDs'' in Chapter 7, ''LED Interpretation''. Also, see "Handling Common Port Circuit Packs."

b. This circuit pack has been busied out using the **busyout board PCSS** command.

c. There are more than four MMI circuit packs in the system. Remove the circuit pack that generated the error in the error log by locating the slot indicated by the error.

d. Indicates transient communication problems between the switch and this circuit pack. Execute the **test board PCSS** command and refer to the repair procedures for the Control Channel Looparound Test (#52) in the XXX-BD section.

e. The circuit pack detected an Angel on-board hardware failure. The reported aux data values correspond to the following detected errors:

   4352 - External RAM error
   4253 - Internal RAM error
   4355 - ROM Checksum error
   4357 - Instruction set error

   Reset the circuit pack by using **busyout board PCSS**, **reset board PCSS**, and **release board PCSS**. When reset, the circuit pack executes a set of tests to detect the presence of any of the above faults. The detection of one these errors during initialization causes the circuit pack to lock up and appear insane to the system. See the repair procedures in note b for Error Type 1.

f. This MMI circuit pack reported a loss of MMI synchronization. Refer to Test (#1123) for repair procedures.

g. A failure of the time slot interchanger has been detected. Reset the circuit pack using **busyout board PCSS**, **reset board PCSS**, and **release board PCSS**. If the reset passes, then the on-board circuitry is healthy. Retire the alarm using **test board PCSS long clear** followed by **release board PCSS**.

h. The circuit pack is hyperactive; that is, it is flooding the switch with messages sent over the control channel. The circuit pack is taken out of service when a threshold number of these errors is reported to the switch. Clear the alarm using the following commands: **busyout board PCSS**, **reset board PCSS**, **test board PCSS long clear**, **release board PCSS**. If the error recurs within 10 minutes, replace the circuit pack.

i. The TSI Cross Talk Test (#6) failed. See the description of this test and follow the repair procedures.

j. The TSI Looparound Test (#1108) failed. See the description of this test and follow the repair procedures.

System Technician-Demanded Tests: Descriptions and Error Code

Always investigate tests in the order presented in the table below when inspecting errors in the system. By clearing error codes associated with the TSI Crosstalk Test (#6), for example, you may also clear errors generated from other tests in the testing sequence.

Table 10-420. System Technician-Demanded Tests: MMI-BD

Order of Investigation	Short Test Sequence	Long Test Sequence	Reset Board Sequence	D/ND[1]
TSI Crosstalk (#6)		X		ND
TSI Looparound Test (#1108)		X		ND
MMI SYNC Status Test (#1123)	X			ND
MMI SYNC Status Test (#1122)		X		ND
Control Channel Looparound Test (#52)[2]	X	X		ND
SAKI Sanity Test (#53)[2]			X	D

1 D = Destructive, ND = Non-destructive

2 Refer to the repair procedure described in XXX-BD (Common Port Circuit Pack) for a description of this test.

TSI Crosstalk Test (#6)

This test is non-destructive.

The Time Slot Interchanger (TSI) chip controls connectivity to the TDM bus. The TSI Cross Talk Test verifies that this TSI talks on the selected TDM bus time slot and never crosses over to time slots reserved for other connections. If the TSI is not working correctly, one-way and noisy connections may occur. If the test passes, then the TSI is able to communicate over the TDM bus. This test is part of the circuit pack's demand and scheduled long test sequence, and takes approximately 20 to 30 seconds to complete.

Table 10-421. TEST #6 TSI Crosstalk Test

Error Code	Test Result	Description/Recommendation
	ABORT	Internal system error. This is an abnormal abort. 1. Retry the command at 1-minute intervals a maximum of 5 times.
1002	ABORT	The system could not allocate time slots for the test, the traffic load on the system is very high, or the time slots are out-of-service due to TDM-BUS errors. Refer to “TDM-BUS” to diagnose any active TDM Bus errors. 1. If the system has no TDM-BUS errors and is not handling heavy traffic, repeat the test at 1-minute intervals a maximum of 5 times.
1003	ABORT	The system could not allocate a tone detector for the test. The system is oversized for the number of tone detectors present, or some tone detectors are out-of-service. 1. Resolve any “TTR-LEV” errors in the Error Log. 2. Resolve any “TONE-PT” errors in the Error Log. 3. If neither condition exists, retry the test at 1-minute intervals a maximum of 5 times.
2000	ABORT	Response to the test was not received from the MMI-BD circuit pack within the allowable time period. 1. If this result occurs repeatedly, attempt to reset the circuit pack if the other ports are not in use. Reset the circuit pack by issuing the **busyout board PCSS**, **reset board PCSS**, followed by the **release board PCSS** commands. 2. If this result occurs again, replace the circuit pack.
2012	ABORT	Internal system error. This is an abnormal abort.
2100	ABORT	Could not allocate the necessary resources to run this test. This is an abnormal abort. 1. Retry the command at 1-minute intervals a maximum of 5 times.
	FAIL	The TSI was found to be transmitting in error. This causes noisy and unreliable connections. 1. Replace the circuit pack.
	PASS	The TSI is correctly using its allocated time slots.

TSI Looparound Test (#1108)

This test is non-destructive.

During this test, the MMI's Time Slot Interchanger (TSI) is listens to a TDM timeslot. A digital count tone loops back in the TSI and onto another TDM timeslot without passing through any resource hardware. A tone detector port verifies the looped data. If the digital count is correct, then the test passes. The test is done for both TDM buses. Failures indicate that the TSI is unreliable.

Table 10-422. TEST #1108 TSI Looparound Test

Error Code	Test Result	Description/Recommendation
	ABORT	Internal system error. This is an abnormal abort. 1. Retry the command at 1-minute intervals a maximum of 5 times.
1002	ABORT	The system could not allocate time slots for the test. Either the traffic load on the system is very high or time slots is out-of-service due to TDM-BUS errors. Refer to "TDM-BUS" to diagnose any active TDM Bus errors. 1. If the system has no TDM-BUS errors and is not handling heavy traffic, repeat the test at 1-minute intervals a maximum of 5 times.
1003	ABORT	The system could not allocate a tone detector for the test. The system may be oversized for the number of Tone Detectors present, or some Tone Detectors may be out-of-service. 1. Resolve any "TTR-LEV" errors in the Error Log. 2. Resolve any "TONE-PT" errors in the Error Log. 3. If neither condition exists, retry the test at 1-minute intervals a maximum of 5 times.
2000	ABORT	Response to the test was not received from the Tone Detector circuit pack within the allowable time period. 1. If this result occurs repeatedly, attempt to reset the circuit pack (if the other ports are not in use). Reset the circuit pack by issuing the **busyout board PCSSpp** and the **reset board PCSSpp** commands followed by the **release board PCSS** command. 2. If this result occurs again, replace the circuit pack.
2012	ABORT	Internal system error. This is an abnormal abort.

Continued on next page

Table 10-422. TEST #1108 TSI Looparound Test — *Continued*

Error Code	Test Result	Description/Recommendation
2100	ABORT	Could not allocate the necessary resources to run this test. This is an abnormal abort. 1. Retry the command at 1-minute intervals a maximum of 5 times.
	FAIL	The TSI was found to be transmitting in error, causing noisy and unreliable connections. 1. Replace the circuit pack.
	PASS	The TSI is correctly using its allocated time slots.

MMI Synchronization Status Test (#1122 and 1123)

This test is non-destructive.

To support applications involving multiple MMI circuit packs, the appropriate MMI circuit packs must be synchronized with one another. One such circuit pack is designated as the master sync source, which provides the synchronization signal onto the TDM bus. The other MMI circuit packs in the system listen to this signal.

This test monitors this synchronization state. The test fails if the MMI circuit pack is not in sync. The test passes with auxiliary code 1100 if the MMI circuit pack is in sync and is providing the synchronization signal for the system. The test also passes with an auxiliary code of 1101 if the MMI circuit pack is in sync and listening to the sync signal. MMI circuit packs do not lose the synchronization signal unless an MMI circuit pack is either pulled out of the system or reset by using a technician command.

Test #1122 runs when the **long** option of the **test board** command is entered, initiating the recovery of synchronization. Test #1123 runs when the **short** option of the **test board** command is entered, giving the status of the synchronization. You need not necessarily run the **long** option since synchronization signal recovery should be taking place within software running in the background. Use the **long** option only if synchronization is not established within 5 minutes of investigating the problem.

Table 10-423. TEST #1122/1123 MMI Synchronization Status Test

Error Code	Test Result	Description/Recommendation
	ABORT	Internal system error. This is an abnormal abort. 1. Retry the command at 1-minute intervals a maximum of 5 times.
2000	ABORT	A response to the test was not received from the MMI circuit pack within the allowable time period. 1. If this result occurs repeatedly and the MMI circuit pack is idle, reset the circuit pack using **busyout board PCSS**, then **reset board PCSS**, followed by **release board PCSS**. 2. Rerun the test; if the same result occurs again, replace the MMI circuit pack.
2012	ABORT	Internal system error
2100	ABORT	Could not allocate the necessary resources to run this test. This is an abnormal abort. 1. Retry the command at 1-minute intervals a maximum of 5 times.
	FAIL	The MMI circuit pack is out of MMI synchronization. Run the **long** option of the **test board** command. 1. Wait up to 5 minutes, and then reset the circuit pack with these commands: **busyout board PCSS**, then **reset board PCSS**, followed by **release board PCSS**. 2. Rerun the test; if the same result occurs again, replace the circuit pack.
1100	PASS	The MMI circuit pack is providing the synchronization correctly. This MMI circuit pack is designated as the Master Sync source.
1101	PASS	The MMI circuit pack is listening to the synchronization signal correctly.

Control Channel Looparound Test (#52)

Refer to the repair procedure described in the XXX-BD (Common Port Circuit Pack) maintenance documentation as Control Channel Looparound Test (#52).

SAKI Sanity Test (#53)

Refer to the repair procedure described in the XXX-BD (Common Port Circuit Pack) maintenance documentation as SAKI Sanity Test (#53).

MMI-LEV (Multimedia Interface Resource Level)

MO Name (in Alarm Log)	Alarm Level	Initial Command to Run	Full Name of MO
MMI-LEV	MAJOR	See "Resolving MMI-LEV Errors/Alarms" (below)	MMI-LEV

The Multimedia Interface Resource Level MO monitors MMI efficiency by tracking the number of MMI ports that are in-service, and then comparing that number with the value entered in the `MMIs` field on the System-Parameters Maintenance form. This `MMIs` field is located under the Minimum Maintenance Threshold section. The `MMIs` field contains the minimum number of MMI ports needed for the Multimedia Call Handling (MMCH) feature to run efficiently and is an administrable field. This field must contain a minimum threshold number for MMI port capacity of between 0-128. The MMCH feature must be enabled on the System-Parameters Customer-Options form before the `MMIs` field can be changed to a number greater than zero. The algorithm for determining that a low level of MMI resources exists uses the value entered in the `MMIs` field, and the number of MMI ports that are in-service in the system.

Each MMI circuit pack contains a maximum of 32 ports. If the number of in-service MMI ports falls below the minimum port capacity (value entered on the System Parameters Maintenance form under the Minimum Maintenance Threshold section and in the `MMI` field), a MMI-LEV error is logged. If this outage continues for 15 minutes, a MAJOR alarm is raised.

Resolving MMI-LEV Errors/Alarms

MMI ports are a key part of the MMCH feature, and any loss in the number of ports available for use degrades the MMCH customer-defined service level.

If a MMI circuit pack or port is busied out using the **busyout board** or **busyout port** commands, these out-of-service ports are not included in the MMI level calculation, thus allowing a technician to busy out a MMI circuit pack for maintenance reasons without causing a MAJOR alarm to be raised. However, if all of the ports on the MMI circuit pack are not made busy and the circuit pack is removed, an alarm is raised.

NOTE:
When diagnosing a MMI-LEV problem, begin by resolving any alarms raised against MMI-BD or MMI-PT maintenance objects. Clearing MMI-BD or MMI-PT alarms may clear the MMI-LEV alarm.

The MMI circuit pack is maintained by the software like the Tone Detector circuit pack, which can be removed and reinserted in any port board slot without administration. Similarly, if a MMI circuit pack is removed from service logically by failing the Archangel sanity scan test or is removed from service physically by removing the circuit pack from the carrier, no error/alarm is raised against either the MMI-BD or the MMI-PT maintenance objects. Therefore, if a MMI-LEV error/alarm exists, yet no alarms have been raised against MMI-BD or MMI-PT maintenance objects, a MMI circuit pack may have been removed from service causing the MMI-LEV error/alarm. To resolve a MMI-LEV MAJOR alarm, restore the number of MMI ports available for service to be equal to or greater than the calculated port capacity.

To determine how many MMI circuit packs are needed for the MMCH feature:

1. Using the **display system-parameters maintenance** command, locate the number listed in the `Minimum Maintenance Thresholds` (`MMIs`) field and record this number.
2. Use the **list configuration** command to verify the number of MMI ports.
3. Compare this number with the value listed in the `MMI` field on the System-Parameters Maintenance form (number listed in step 1 a minimum thresholds number for MMI ports of between 0-128). Each MMI circuit pack contains a maximum of 32 ports. If the number in the `MMIs` field is less than or equal to 32, one MMI circuit pack is needed. If this number is 64, then two MMI circuit pack are needed.
4. Use the **list configuration** command to verify that the number of MMI circuit packs listed agrees with the required minimum port capacity (from step 1). If the number of MMI circuit packs listed in the step 2 differs from the calculated number, restore the number of MMI circuit packs to the correct value, in order to resolve the MMI-LEV alarm.

Error Log Entries and Test to Clear Values

Table 10-424. MMI-LEV Error Log Entries

Error Type	Aux Data	Associated Test	Alarm Level	On/ Off Board	Test to Clear Value
1[1]	Any	None	MAJOR	OFF	

1 The number of MMI resources in the system that are in service has fallen below the calculated minimum value. If the number of in-service MMI ports falls below the MMCH port capacity (value entered in the Minimum Maintenance Thresholds for MMIs field) on the System-Parameters Maintenance form, a MMI-LEV error is logged. If this outage continues for 15 minutes, a MAJOR alarm is raised.

To resolve this alarm, correct the out-of-service problem by following these procedures:

1. See “MMI-PT” and “MMI-BD” and resolve any associated alarms.
2. If a MMI-LEV error/alarm exist and none has been raised against MMI-BD or MMI-PT maintenance objects, an MMI circuit pack may have been removed from service causing the MMI-LEV error/alarm. To resolve a MMI-LEV MAJOR alarm, restore the number of MMI ports available for service to be equal to or more than the calculated port capacity. See the ‘‘Resolving MMI-LEV Errors/Alarms’’ section above for details.
3. If the error continues to alarm, escalate the problem.

System Technician-Demanded Tests: Descriptions and Error Code

There are no System Technician-Demanded tests for MMI-LEV.

MMI-PT

MO Name (in Alarm Log)	Alarm Level	Initial Command to Run[1]	Full Name of MO
MMI-PT	MAJOR	test port PCSSpp l r#	Multimedia Interface Port
MMI-PT	MINOR	test port PCSSpp l r#	Multimedia Interface Port
MMI-PT	WARNING	test port PCSSpp l r#	Multimedia Interface Port

1 Where P is the port network number (1 for PPN and 2 or 3 for EPN); C is the carrier designation (for example, A, B, C, or D); and SS is the address of the slot in the carrier where the circuit pack is located (for example, 01, 02, ..., and so forth).

NOTE:
Refer to ‘‘Troubleshooting MMCH’’ in Chapter 5 for MMCH troubleshooting information.

The Multimedia Interface Circuit Pack provides a number of H.221 protocol terminations for bit streams received from the TDM bus. The Multimedia Interface demultiplexes the H.221 bit stream (audio, video, data, control, and indication signals) and transmits the bit streams onto the TDM bus to be processed by the appropriate circuit packs.

Each Multimedia Interface Circuit Pack contains 32 separately maintained “ports,” more commonly referred to as “resources.” MMI-PT represents one of these 32 resources. At system boot or when the circuit pack is inserted, 32 resources are inserted into the system.

The MMI circuit pack contains 4 Digital Signal Processors (DSPs) which manage the 32 resources. These resources are directly mapped to DSPs:

Resource	Direct Map
1-8	DSP1
9-16	DSP2
17-24	DSP3
25-32	DSP4

All 8 resources that the circuit pack controls may be placed out of service by the failure of one of these DSPs.

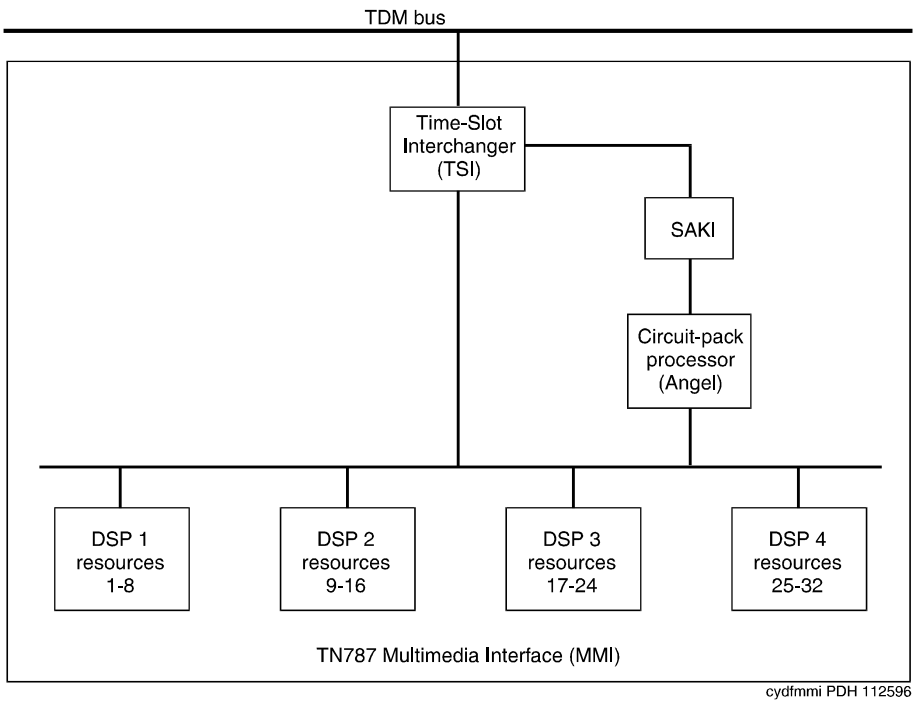

Figure 10-74. TN787 Multimedia Interface (MMI) Circuit Pack

Error Log Entries and Test to Clear Values

Table 10-425. MMI-PT Error Log Entries

Error Type	Aux Data	Associated Test	Alarm Level	On/ Off Board	Test to Clear Value
0[1]	0	Any	Any	Any	test port PCSSpp sh r 1
1 (a)	Any	Uplink error from pack			
18 (b)	0	Busyout port PCSSpp	WNG	OFF	release port PCSSpp
130 (c)	Any	Software generated	WNG	ON	
257 (d)	Any	None	MAJ/ MIN	ON	
513 (e)	Any	Resource Loopback Test (#1111)	MIN	ON	test port PCSSpp sh r 3
1025 (f)	Any	Uplink error from pack			
3841 - 3844 (g)	Any	Uplink error from pack			

1 Run the short test sequence first. If all tests pass, run the Long Test Sequence. Refer to the appropriate test description and follow the recommended procedures.

Notes:

a. The customer endpoint connected on a conference sent too many messages to the VSP-MCU in a specified amount of time. Check the “status conference” forms to correlate which customer had the problem. This is a customer endpoint problem and not a VSP-MCU problem.

b. This port has been busied out by the **busyout port PCSSpp** command.

c. Indicates that the circuit pack has been removed or has been insane for more than 11 minutes. To clear the error, replace or reseat the circuit pack.

d. This error occurs if the MMI circuit pack detects a DSP Error. Maintenance software will reset the DSP when this error is received. This error is logged for all 8 resources connected to this particular DSP. If this DSP continues to fail sanity, a Minor alarm is raised. Replace the circuit pack.

e. This error occurs when the Resource Looparound Test (#1111) fails. Run the Long Test Sequence and note the results of Test #1111.

f. This error occurs if either the MMI or Voice Conditioner (VC) circuit packs reports a loss of framing on the service channel between these two circuit packs. When a customer endpoint establishes a call to the VSP-MCU, a channel is established between the MMI resource and the VC port. If this channel is detected to go down by either circuit pack, an uplink message is sent. This error is then forwarded to maintenance for both circuit packs. Run the Long Test Sequence for this MMI resource, and if any of the tests fail, follow the repair procedures for that test. If all tests pass, the cause of the problem might be with the VC pack. See the “VC-DSPPT” repair procedures.

g. These errors are not related to VSP-MCU. They could be caused by network problems or from the customer endpoints. They are presented here for logging purposes only:

Code	Description
3841	CRC4 Error (Frame checksum error)
3842	Correctable BAS (Control msg single or double bit error, but correctable)
3843	Uncorrectable BAS (Control msg bit error -three or more bit, uncorrectable)
3844	Protocol Error (H.221 Protocol error from endpoint detected)

System Technician-Demanded Tests: Descriptions and Error Codes

Order of Investigation	Short Test Sequence	Long Test Sequence	D/ND[1]
Resource Looparound Test (#1111)	X	X	D

1 D = Destructive; ND = Nondestructive

Resource Looparound Test (#1111)

This test is destructive.

This test checks the connectivity of the resource within MMI circuit pack and out to the TDM bus. The object is to test the circuitry that an H.221 bit stream comes in contact with when that stream is demultiplexed, pre-processed, written to the TDM bus and then reread (looped in the TSI), post-processed, multiplexed, and then written back to the TDM bus for verification. The video, audio, and data components of the bit stream are tested separately. If any one of these tests fails, then the resource is taken out of service.

Table 10-426. TEST #1111 Resource Looparound Test

Error Code	Test Result	Description/Recommendation
1000	ABORT	System resources required to run this test are not available. The port may be busy with a valid call. 1. Retry the command at 1-minute intervals a maximum of 5 times. 2. Use the **status conference** command to determine if there is an active conference. If a call is active, the test cannot be run until the conference call terminates.
1002	ABORT	The system could not allocate time slots for the test. The traffic load on the system may be very high or time slots may be out-of-service due to TDM-Bus errors. Refer to “TDM-BUS” to diagnose any active TDM Bus errors. 1. If the system has no TDM-BUS errors and is not handling heavy traffic, repeat the test at 1-minute intervals a maximum of 5 times.
1003	ABORT	The system could not allocate a tone detector for the test. The system is oversized for the number of tone detectors present or some tone detectors are out-of-service. 1. Look for TTR-LEV errors in the Error Log. If present, refer to “TTR-LEV.” 2. Look for TONE-PT errors in the Error Log. If present, refer to “TONE-PT”. 3. If neither condition exists, retry the test at 1-minute intervals a maximum of 5 times.
1004	ABORT	The resource has been seized by a user for a valid call. Use the **status conference** command to verify that there is a conference call active. 1. If there are no conference calls, retry the command at 1-minute intervals a maximum of 5 times.
2000	ABORT	Response to the test was not received from the Tone Detector circuit pack within the allowable time period. 1. If this result occurs repeatedly, reset the circuit pack, if the other ports are not in use. Reset the circuit pack by issuing the **busyout board PCSSpp** and the **reset board PCSSpp** commands, followed by the **release board PCSS** command. 2. If this result occurs again, replace the circuit pack.
2012	ABORT	Internal system error

Continued on next page

Table 10-426. TEST #1111 Resource Looparound Test — *Continued*

Error Code	Test Result	Description/Recommendation
2100	ABORT	Could not allocate the necessary resources to run this test. Abnormal abort. 1. Retry the command at 1-minute intervals a maximum of 5 times.
0, 1, 2	FAIL	This resource cannot guarantee data integrity and is out-of-service. The following error codes indicate failure of a particular media loop: 0 = video 1 = audio 2 = low-speed data 1. Replace the circuit pack
	PASS	The resource is functioning normally.

MMI-SYNC

MO Name (in Alarm Log)	Alarm Level	Initial Command to Run[1]	Full Name of MO
MMI-SYNC	MINOR	test board PCSS l r#	Multimedia Interface Circuit Pack

1 Where P is the port network number (1 for PPN and 2 or 3 for EPN); C is the carrier designation (for example, A, B, C, or D); and SS is the address of the slot in the carrier where the circuit pack is located (for example, 01, 02, ..., and so forth).

NOTE:
Refer to "Troubleshooting MMCH" in Chapter 5 for MMCH troubleshooting information.

Each Port Network (PN) must have a TN787D or later MMI circuit pack assigned as the Multimedia Interface (MMI) master synchronization source for that PN. If one or more MMI circuit pack is administered in a PN, one MMI circuit pack is designated as the master synchronization source for all MMI circuit packs within that PN.

The MMI circuit pack generates a synchronization signal and puts that signal on the TDM bus. Other MMI packs or any other circuit pack within a PN can listen to this signal and "synchronize up" to it. The first MMI circuit pack inserted in a PN is normally designated as the master. As subsequent MMI packs are inserted, they are instructed to listen and synchronize to the time-slot of the master MMI. In the unlikely case of an MMI losing this reference, an uplink message is sent from the MMI circuit pack that lost the signal to maintenance, which also clears the "event" counter on this MMI with a downlink message. This forces the MMI circuit pack to return the current state of the synchronization signal. If the signal is still lost, then the recovery algorithm is entered. Note that during this time, the MMI circuit pack synchronizes to its internal clock, and there should be no service disruption. A loss of synchronization is usually the result of a circuit pack failure. The maintenance strategy is to switch the master source away from the bad pack to another healthy MMI circuit pack within the PN.

A synchronization switch takes place if half or more of the MMI circuit packs in a PN report a loss of synchronization. For example, a PN with two MMIs reporting a loss of sync source switches immediately, three and four MMIs switch if two report the loss, and so forth. A healthy MMI circuit pack becomes the master synchronization source providing the signal on a new timeslot. The other MMI circuit packs within the PN are instructed to listen to this new signal, and the old master stops providing the signal and now listens to the new master MMI. If an MMI is physically removed from the system, then the remaining MMIs report the loss of synchronization. The first MMI with no alarms present becomes the new master of that PN. Once a synchronization switch has occurred, another switch is not allowed for 15 minutes to avoid hyperactive switching. If all the MMIs have alarms, then no switch is made.

If the MMI circuit pack that provides synchronization is craft busied out, it will not affect the PN synchronization. The signal is still provided by the busied-out pack. There is no affect on synchronization if the technician issues a release of the busied-out MMI. Synchronization is not affected by a warm start of the system (reset system 1). For all other restarts (reboot through cold 2), MMI synchronization recovers during board insertion.

Error Log Entries and Test to Clear Values

Table 10-427. MMI-SYNC Error Log Entries

Error Type	Aux Data	Associated Test	Alarm Level	On/Off Board	Test to Clear Value
1	Any	None			See note [1]
257	Any	None	MINOR	OFF	See note [2]

1 An MMI synchronization switch was successful. Refer to MMI-BD errors for the reason for the switch.

2 The requested MMI synchronization switch failed. Resolve all MMI-BD alarms.

System Technician-Demanded Tests: Descriptions and Error Codes

There are no system technician-demanded tests for MMI-SYNC.

M/T-ANL (Maintenance/Test Analog Port)

MO Name (in Alarm Log)	Alarm Level	Initial Command to Run[1]	Full Name of MO
M/T-ANL	Minor	test port PCSSpp l	Maintenance/Test Analog Port
M/T-ANL	Warning	release port PCSSpp	Maintenance/Test Analog Port

1 Where P is the port network number (1 for PPN and 2 or 3 for EPN); C is the carrier designation (for example, A, B, C, D, or E); and SS is the address of the slot in the carrier where the circuit pack is located (for example, 01, 02, ..., etc.).

The Maintenance/Test Analog Port is port number 1 on the TN771 Maintenance/Test circuit pack. This port is used by the Automatic Transmission Measurement System (ATMS) as an Originating Test Line (OTL) or Terminating Test Line (TTL) for test calls over analog trunks. Figure 10-75 shows a typical ATMS configuration.

M/T-ANL maintenance ensures that the analog trunk's testing function is operating correctly. An alarm against M/T-ANL can reduce service, but it will not block it. To accurately measure performance and health of analog trunks, the TN771 should be replaced when a new circuit pack is available.

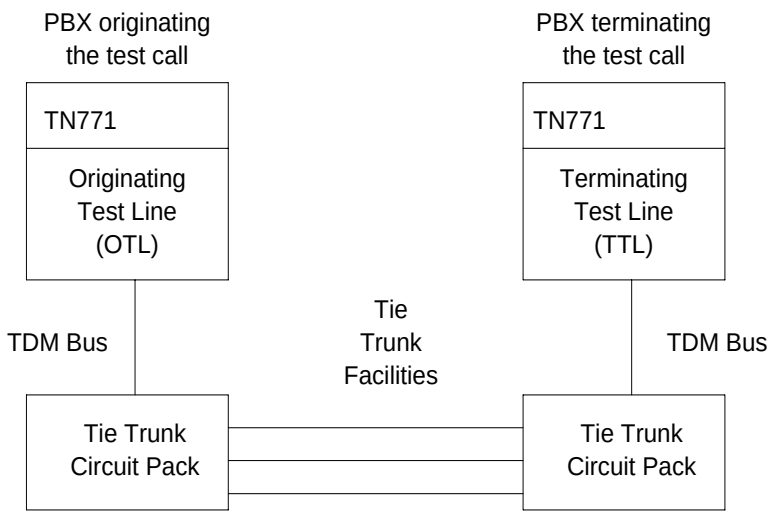

Figure 10-75. ATMS Tie Trunk Test Call

Hardware Error Log Entries and Test to Clear Values

M/T-ANL Error Log Entries

Error Type	Aux Data	Associated Test	Alarm Level	On/Off Board	Test to Clear Value
0[1] (a)	0	Any	Any	Any	test port PCSSpp
1 (b)	41018	none	MINOR	ON	test port PCSSpp l r 3
18	0	busyout port PCSSpp	WARNING	OFF	release port PCSSpp
257	Any	NPE Crosstalk test (#9)	MINOR	ON	test port PCSSpp l r 3
513	Any	Analog Port Sanity Test (#963)	MINOR	ON	test port PCSS01 r 2
769	Any	Analog Port Digital Loop Around Test (#13)	MINOR	ON	test port PCSSpp r 3
3840(c)	Any	Hook State Inquiry test (#566)			

1 Run the Short Test Sequence first. If all tests pass, run the Long Test Sequence. Refer to the appropriate test description and follow the recommended procedures.

Notes**:**

a. This error code appears in the Error Log only if the MTB circuit pack has been removed since the Error Log was last cleared. Verify that the circuit pack has been reinserted.

b. This error indicates a hardware failure on the Analog Port circuitry. Replace the Maintenance/Test circuit pack if the alarm is not resolved by the command above.

c. This error indicates that call processing records did not agree with on-board records for the hook state (on-/off-hook) of the Maintenance/Test Analog Port. This error is not service-affecting and no action is required.

System Technician-Demanded Tests: Descriptions and Error Codes

Always investigate tests in the order presented in the following tables when inspecting errors in the system. By clearing error codes associated with the *Analog Port Sanity Test*, for example, you may also clear errors generated from other tests in the testing sequence.

Order of Investigation	Short Test Sequence	Long Test Sequence	D/ND[1]
Analog Port Sanity Test (#963)	X	X	ND
Digital Loop Around Test (#13)	X	X	ND
NPE Crosstalk Test (#9)		X	ND
Hook State Inquiry (#566)	X	X	ND
Clear Error Counters (#270)		X	ND

1 D = Destructive; ND = Nondestructive

NPE Crosstalk Test (#9)

The NPE Crosstalk Test verifies that this port's NPE channel talks on the selected time slot and never crosses over to time slots reserved for other connections.

One or more Network Processing Elements (NPE) reside on each circuit pack with a TDM Bus interface. The NPE controls port connectivity, gain, and provides conferencing functions on a per port basis. If the NPE is not working correctly, one way and/or noisy connections may be observed. This test is part of a port's long test sequence and takes approximately 10 to 20 seconds to complete

Table 10-428. TEST #9 NPE Cross Talk Test

Error Code	Test Result	Description/Recommendation
1000	ABORT	System resources required to run this test are not available. The port may be in use on a valid ATMS trunk test call. 1. Retry the command at 1-minute intervals a maximum of 3 times. 2. If the test continues to abort and the port is not in use, escalate the problem.
1001	ABORT	System resources required to run this test are not available. 1. Retry the command at 1-minute intervals a maximum of 3 times.

Continued on next page

Table 10-428. TEST #9 NPE Cross Talk Test — *Continued*

Error Code	Test Result	Description/Recommendation
1002	ABORT	The system could not allocate time slots for the test. The system may be under heavy traffic conditions or it may have time slots out of service due to TDM-BUS errors. Refer to TDM-BUS Maintenance documentation to diagnose any active TDM-BUS errors. A system is considered under heavy traffic when the Call Processing Occupancy is greater than 50% or when the System Management and the Call Processing Occupancies together exceed 65%. To view the system occupancy measurements enter the command **status system health** on the system technician terminal. 1. If system has no TDM-BUS errors and is not handling heavy traffic, repeat test at 1-minute intervals a maximum of 3 times. 2. If the test continues to abort, escalate the problem.
1003	ABORT	The system could not allocate a tone receiver for the test. The system may be oversized for the number of tone detectors present or some tone detectors may be out-of-service. 1. Look for TTR-LEV errors in the Error Log. If present, refer to TTR-LEV Maintenance documentation. 2. Look for TONE-PT errors in the Error Log. If present, refer to TONE-PT Maintenance documentation. 3. If neither condition exists, retry the test at 1-minute intervals a maximum of 3 times.
1004	ABORT	The port has been seized by a valid ATMS test call. 1. Retry the command at 1-minute intervals a maximum of 3 times. 2. If the test continues to abort and the port is not in use on a valid ATMS Test Call, escalate the problem. To determine whether the port is in use by an ATMS Test Call enter **status station ext** where **ext** is the assigned ATMS station number.
2000	ABORT	Response to the test request was not received within the allowable time period. 1. Retry the command at 1-minute intervals a maximum of 3 times.
2100	ABORT	System resources required to run this test are not available. 1. Retry the command at 1-minute intervals a maximum of 3 times.

Continued on next page

Table 10-428. TEST #9 NPE Cross Talk Test — *Continued*

Error Code	Test Result	Description/Recommendation
Any	FAIL	The NPE of the tested port was found to be transmitting in error. This will cause noisy and unreliable connections. 1. If the remaining ports are currently not in use (yellow LED is off), try to reset the circuit pack via the **busyout board PCSS**, **reset board PCSS**, **release board PCSS** command sequence. Then repeat the test. 2. If the test fails again, replace circuit pack.
	PASS	The port is correctly using its allocated time slots. User-reported troubles on this port should be investigated by examining station, trunk, or external wiring.

Analog Port Digital Loop Around Test (#13)

This test is a modification of the Voice and Control Channel Local Loop Test used by Digital Station (DIG-LINE) maintenance. This test does not perform the control channel and secondary information channel loop around tests as described for DIG-LINE, as these data paths do not exist for the Maintenance/Test Analog Port. The primary information channel is tested by first looping back the data channel onto the TDM Bus, and then sending a digital count from the Tone-Clock circuit pack and receiving the same digital count with a general purpose tone detector. A conference test is done next for the primary information channel. This test is the same as Conference Test (#6).

Only one value (Pass, Fail, or Abort) is generated as a result of the two tests. If either fails or aborts, the sequence is stopped.

Table 10-429. TEST #13 Analog Port Digital Loop Around Test

Error Code	Test Result	Description/Recommendation
	ABORT	Internal System Error 1. Retry the command at 1-minute intervals a maximum of 3 times.
1000	ABORT	The port is in use on a valid ATMS Test Call. 1. Retry the command at 1-minute intervals a maximum of 3 times. 2. If the test continues to abort and the port is not in use on a valid ATMS Test Call, escalate the problem. To determine whether the port is in use by an ATMS Test Call enter **status station ext** where **ext** is the assigned ATMS station number.
1001	ABORT	System resources required to run this test are not available. 1. Retry the command at 1-minute intervals a maximum of 3 times.
1002	ABORT	The system could not allocate time slots for the test. The system may be under heavy traffic conditions, or it may have time slots out-of-service due to TDM-BUS errors. Refer to TDM-BUS Maintenance to diagnose any active TDM-BUS errors. A system is considered under heavy traffic when the Call Processing Occupancy is greater than 50% or when the System Management and the Call Processing Occupancies together exceed 65%. To view the system occupancy measurements enter the command **status system health** on the system technician terminal. 1. If the system has no TDM-BUS errors and is not handling heavy traffic, repeat the test at 1-minute intervals a maximum of 3 times.
1003	ABORT	The system could not allocate a tone receiver for the test. The system may be oversized for the number of tone detectors present, or some tone detectors may be out-of-service. 1. Look for TTR-LEV errors in the Error Log. If present, refer to TTR-LEV Maintenance documentation. 2. Look for TONE-PT errors in the Error Log. If present, refer to TONE-PT Maintenance documentation. 3. If neither condition exists, retry the command at 1-minute intervals a maximum of 3 times.

Continued on next page

Table 10-429. TEST #13 Analog Port Digital Loop Around Test — *Continued*

Error Code	Test Result	Description/Recommendation
1004	ABORT	The port was seized by a valid ATMS Test Call. 1. Retry the command at 1-minute intervals a maximum of 3 times. 2. If the test continues to abort and the port is not in use on a valid ATMS Test Call, escalate the problem. To determine whether the port is in use by an ATMS Test Call enter **status station ext** where **ext** is the assigned ATMS station number.
2000	ABORT	Response to the test request was not received within the allowable time period. 1. Retry the command at 1-minute intervals a maximum of 3 times.
7	FAIL	Conference test failed on the primary information channel. 1. Run the circuit pack tests to check the Tone/Clock (TONE-BD) circuit pack and the Tone Detector circuit pack via the **test board PCSS** command. 2. Resolve any problems that are detected on the Tone/Clock (TONE-BD) circuit pack or Tone Detector circuit pack. See the section on Tone Generator circuit pack. 3. If the Tone/Clock and Tone Detector circuit packs are functioning properly, and the test still fails, replace the Maintenance/Test circuit pack.
14	FAIL	The primary information channel is not transmitting properly. User may not notice any interruption in service or may not be able to use this port. 1. Run the circuit pack tests to check the Tone Generator circuit pack and the Tone Detector circuit pack using **test board PCSS**. 2. Resolve any problems that are detected on the Tone Generator circuit pack or Tone Detector circuit pack. See the section on Tone Generator circuit pack. 3. If the Tone Generator and Tone Detector circuit packs are functioning properly, and the test still fails, replace the Maintenance/Test Circuit Pack.
	PASS	The Maintenance/Test Analog Port analog trunk testing capability is operating correctly.

Clear Error Counters (#270)

The ports on the Maintenance/Test circuit pack continually run self-tests, whenever the port is idle. The Angel uses a counter so that the Background Maintenance Failure message is only sent uplink once (this keeps a failed port/circuit pack from flooding the SPE with a string of messages). Many circuit packs have counters in the Angel firmware. These counters are used so that Control Channel Message Set (CCMS) messages are not continuously sent uplink. Using this method, the message will be sent once, when the counter reaches some preset threshold, and then not sent again until the counter is cleared. This test is used to clear the counter, so that if the port continues to fail during or after SPE-demanded testing, the Angel will send a message to indicate that fact.

This test is only used to send a message to the Angel on the Maintenance/Test Circuit Pack. Therefore, this test should never abort or fail.

Table 10-430. TEST #270 Clear Error Counters

Error Code	Test Result	Description/Recommendation
	PASS	The message to clear the Maintenance/Test circuit pack's counter for Background Maintenance Failures has been sent.

Hook State Inquiry (#566)

This test ensures that the Maintenance/Test Analog Port maintenance software and call processing agree on the on-/off-hook status of the Maintenance/Test Analog Port.

Table 10-431. TEST #566 Hook State Inquiry

Error Code	Test Result	Description/Recommendation
1	ABORT	Switch hook audit timed out. No response was received from the circuit pack for information about the switch hook state. 1. Retry the command at 1-minute intervals a maximum of 3 times. 2. If the test continues to abort, replace the circuit pack and repeat the test.
2100	ABORT	System resources required to run this test are not available. 1. Retry the command at 1-minute intervals a maximum of 3 times.
Any	FAIL	Internal System Error 1. Retry the command at 1-minute intervals a maximum of 3 times. 2. If the test continues to fail reset the circuit pack via the **busyout board PCSS**, **reset board PCSS**, **release board PCSS** command sequence. 3. Retry the command at 1-minute intervals a maximum of 3 times.
	PASS	Call processing and Maintenance/Test Analog Port maintenance software agree on the Maintenance/Test Analog Port hook state.

Analog Port Sanity Test (#963)

This test verifies that the port circuitry involved in the analog trunk testing on the Maintenance/Test Analog Port is functioning properly.

This test will abort if an ATMS Test Call is in progress on the Maintenance/Test Analog Port when the test is requested.

Table 10-432. TEST #963 Analog Port Sanity Test

Error Code	Test Result	Description/Recommendation
2000	ABORT	Response to the test request was not received within the allowable time period.
2100	ABORT	System resources required to run this test are not available.
2500	ABORT	An internal operation failed; the test could not be completed. 1. Retry the command at 1-minute intervals a maximum of 3 times.
50	FAIL	The switch was unable to communicate with the port circuitry used for analog trunk testing. 1. Reset the circuit pack via the **busyout board PCSS**, **reset board PCSS**, **release board PCSS** command sequence. 2. Test the port again via the **test port PCSS01 l** command. 3. If the test fails again, replace the circuit pack.
	PASS	The Maintenance/Test Analog Port analog trunk testing capability is operating correctly.

M/T-BD (Maintenance/Test Circuit Pack)

MO Name (in Alarm Log)	Alarm Level	Initial Command to Run[1]	Full Name of MO
M/T-BD	MIN	test board PCSS l	Maintenance Test Circuit Pack
M/T-BD	WRN	release board PCSS	Maintenance/Test Circuit Pack

1 Where P is the port network number (1 for PPN and 2 or 3 for EPN); C is the carrier designation (for example, A, B, C, D, or E); and SS is the address of the slot in the carrier where the circuit pack is located (for example, 01, 02, ..., etc.).

CAUTION:
In G3iV1.1-286 and G3iV2-386, a TN771D (or later vintage) Maintenance/Test circuit pack must be used.

Refer to XXX-BD (Common Port Circuit Pack) Maintenance documentation for circuit pack level errors. See also M/T-DIG (Maintenance/Test Digital Port) and M/T-PKT (Maintenance/Test Packet Bus Port) Maintenance documentation for related digital port and Packet Bus port information, respectively.

M/T-DIG (Maintenance/Test Digital Port) [G3iV1-1.286, G3iV2-386]

MO Name (in Alarm Log)	Alarm Level	Initial Command to Run[1]	Full Name of MO
M/T-DIG	Minor	test port PCSSpp l	Maintenance/Test Digital Port
M/T-DIG	Warning	release port PCSSpp	Maintenance/Test Digital Port

1 Where P is the port network number (1 for PPN, 2 or, 3 for EPN-1 and 3 for EPN-2); C is the carrier designation (A, B, C, D, or E); SS is the address of the slot in the carrier where the circuit pack is located (01, 02, ..., etc.); and pp is the 2-digit port number (for example, 01).

The Maintenance/Test Digital Port is a port on the TN771D (or later vintage) Maintenance/Test circuit pack, which is required for G3iV1.1-286 or G3iV2-386. Ports 2 and 3 are Digital Ports. The Maintenance/Test Digital Port provides the ability to perform digital (that is, ISDN-PRI) trunk testing via the TDM Bus. For an ISDN-PRI test call, connections are set up in the system as shown in Figure 10-76 on page 10-1146.

When the Maintenance/Test Digital Port is participating in an ISDN-PRI test call, the port sends a stream of pseudo-random data along the connected B-channel. The far end loops back this data, and the Maintenance/Test Digital Port compares the data to that which was sent. Errors are recorded on a bit and block basis. Refer to ISDN-TRK (DS1ISDN Trunk) Maintenance documentation for more information on ISDN-PRI test calls.

The Maintenance/Test Digital Port maintenance ensures that the digital trunk testing function is operating correctly. The Maintenance/Test Digital Port is alarmed if maintenance determines that the digital port is operating incorrectly.

NOTE:
An alarm on the Maintenance/Test Digital Port reduces service, but does not block it since the ISDN-TRK has other means to determine the health of the ISDN-PRI trunk facility. However, to accurately measure the error performance and to ensure accuracy of the health of the ISDN-PRI trunk, the Maintenance/Test circuit pack should be replaced when a new circuit pack is available.

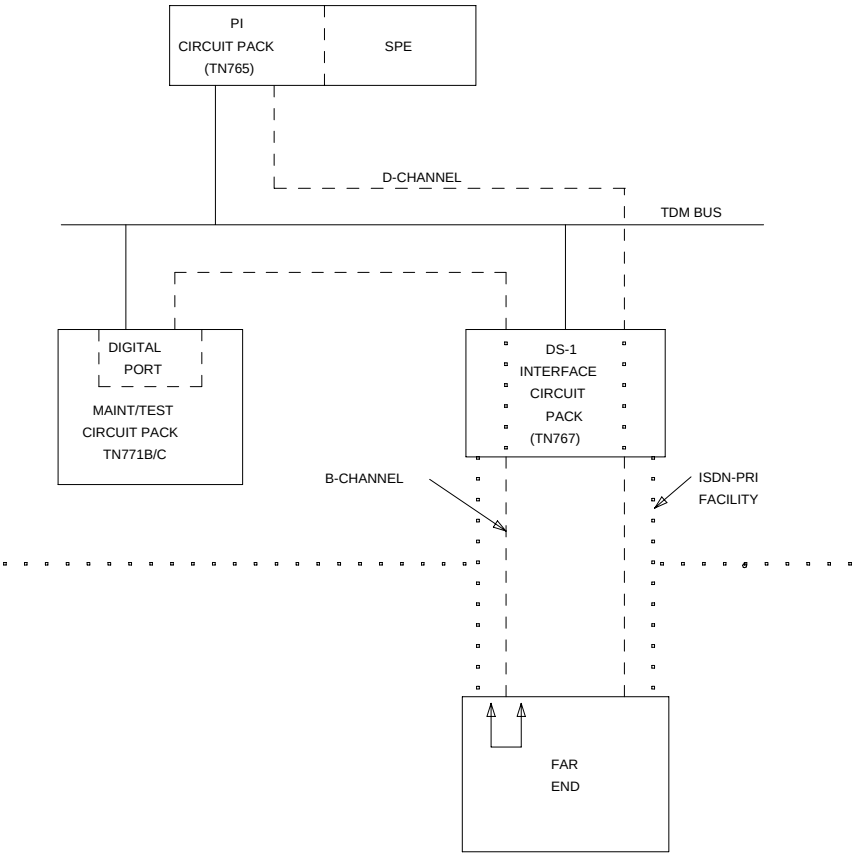

Figure 10-76. ISDN-PRI Outgoing Test Call

Hardware Error Log Entries and Test to Clear Values

M/T-DIG Error Log Entries

Error Type	Aux Data	Associated Test	Alarm Level	On/Off Board	Test to Clear Value
0[1]	0	Any	Any	Any	test port PCSSpp
1 (a)	41018	none	MINOR	ON	test port PCSSpp l r 3
18 (b)	0	busyout port PCSSpp	WARNING	OFF	release port PCSSpp
257 (c)	Any	NPE Crosstalk Test (#9)	MINOR	ON	test port PCSSpp l r 3
513 (d)	Any	Digital Port Sanity Test (#565)	MINOR	ON	test port PCSS02 r 2
769 (e)	Any	Digital Port Loop Around Test (#13)	MINOR	ON	test port PCSSpp r 3
3840 (f)	Any	Hook State Inquiry Test (#566)			

1 Run the Short Test Sequence first. If all tests pass, run the Long Test Sequence. Refer to the appropriate test description and follow the recommended procedures.

Notes**:**

a. This error indicates a hardware failure on the Digital Port circuitry. Replace the Maintenance/Test circuit pack if the alarm is not resolved by the command above.

b. The port has been busied out via the **busyout port PCSSpp** command.

c. This error indicates that Maintenance/Test Digital Port is talking on more than just its assigned time slot. Replace the Maintenance/Test circuit pack.

d. This error indicates that the Maintenance/Test Digital Port has failed its self-test. Since the Digital Port Sanity Test runs only on Port 2, but tests both Ports 2 and 3, both ports are alarmed when the test fails. Note that the command above indicates to test Port 2, even if the error is logged against Port 3.

e. This error indicates that the Maintenance/Test Digital Port has been unable to successfully loop data from a tone generator to a tone detector.

f. This error indicated that call processing records did not agree with on-board records for the hook state (on-/off-hook) of the Maintenance/Test Digital Port. This error is not service-affecting and no action is required.

System Technician-Demanded Tests: Descriptions and Error Codes

Always investigate tests in the order presented in the following tables when inspecting errors in the system. By clearing error codes associated with the *Digital Port Sanity Test*, for example, you may also clear errors generated from other tests in the testing sequence.

Order of Investigation	Short Test Sequence	Long Test Sequence	D/ND[1]
Digital Port Sanity Test (#565)	X	X	ND
Digital Port Loop Around Test (#13)	X	X	ND
NPE Crosstalk Test (#9)		X	ND
Hook State Inquiry (#566)	X	X	ND
Clear Error Counters (#270)		X	ND

1 D = Destructive; ND = Nondestructive

NPE Crosstalk Test (#9)

This test is a modified version of the Digital Line NPE Crosstalk Test used by DIG-LINE maintenance.

One or more NPE reside on each circuit pack with a TDM Bus interface. The NPE controls port connectivity, gain, and provides conferencing functions on a per port basis. The NPE Crosstalk Test verifies that this port's NPE channel talks on the selected time slot and never crosses over to time slots reserved for other connections. If the NPE is not working correctly, one way and/or noisy connections may be observed. This test is part of a port's long test sequence and takes approximately 10 to 20 seconds to complete. This test is a modified version of the Digital Line NPE Crosstalk Test used by DIG-LINE maintenance.

Table 10-433. TEST #9 NPE Cross Talk Test

Error Code	Test Result	Description/Recommendation
1000	ABORT	System resources required to run this test are not available. The port may be in use on a valid ISDN-PRI test call. Use the **list isdn-testcall** command to determine if the port is in use (if the port is listed in the M/T Port column). If it is in use, either wait for the test call to complete (as indicated in the Start Time and Duration fields in the above display), or abort the test call with the **clear isdn-testcall tg/mem** command, where **tg/mem** is determined from the B-channel field of the above display. 1. Retry the command at one-minute intervals a maximum of 5 times. 2. If the test continues to abort and the port is not in use, escalate the problem.
1001	ABORT	System resources required to run this test are not available. 1. Retry the command at one-minute intervals a maximum of 5 times.
1002	ABORT	The system could not allocate time slots for the test. The system may be under heavy traffic conditions or it may have time slots out of service due to TDM-BUS errors. Refer to TDM-BUS Maintenance documentation to diagnose any active TDM-BUS errors. 1. If system has no TDM-BUS errors and is not handling heavy traffic, repeat test at one-minute intervals a maximum of 5 times.
1003	ABORT	The system could not allocate a tone receiver for the test. The system may be oversized for the number of tone detectors present or some tone detectors may be out-of-service. 1. Look for TTR-LEV errors in the Error Log. If present, refer to TTR-LEV Maintenance documentation. 2. Look for TONE-PT errors in the Error Log. If present, refer to TONE-PT Maintenance documentation. 3. If neither condition exists, retry the test at one-minute intervals a maximum of 5 times.

Continued on next page

Table 10-433. TEST #9 NPE Cross Talk Test — *Continued*

Error Code	Test Result	Description/Recommendation
1004	ABORT	The port has been seized by a valid ISDN-PRI test call. Use the **list isdn-testcall** command to determine which call is using the port (from the M/T Port column). Either wait for the test call to complete (as indicated in the Start Time and Duration fields of the above display), or abort the test call with **clear isdn-testcall tg/mem**, where tg/mem is determined from the B-channel field of the above display. 1. Retry the command at one-minute intervals a maximum of 5 times. 2. If the test continues to abort and the port is not in use, escalate the problem.
2000	ABORT	Response to the test request was not received within the allowable time period.
2100	ABORT	System resources required to run this test are not available. 1. Retry the command at one-minute intervals a maximum of 5 times.
Any	FAIL	The NPE of the tested port was found to be transmitting in error. This causes noisy and unreliable connections. 1. If the remaining ports are currently not in use (yellow LED is off), try to reset the circuit pack. Then repeat the test. 2. If the test fails again, replace the circuit pack.
	PASS	The port is correctly using its allocated time slots. User-reported troubles on this port should be investigated using other port tests and by examining station, trunk, or external wiring.

Digital Port Loop Around Test (#13)

This test is a modification of the Voice and Control Channel Local Loop Test used by Digital Station (DIG-LINE) maintenance. This test does not perform the control channel and secondary information channel loop around tests as described for DIG-LINE, as these data paths do not exist for the Maintenance/Test Digital Port. The primary information channel is tested by first looping back the data channel onto the TDM Bus, and then sending a digital count from the Tone-Clock circuit pack and receiving the same digital count with a general purpose tone detector. A conference test is done next for the primary information channel. This test is the same as Conference Test #6.

Only one value (Pass, Fail, or Abort) is generated as a result of the two tests. If either fails or aborts, the sequence is stopped.

Table 10-434. TEST #13 Digital Port Loop Around Test

Error Code	Test Result	Description/Recommendation
	ABORT	Internal System Error. 1. Retry the command at one-minute intervals a maximum of 5 times.
1000	ABORT	The port is in use on a valid ISDN-PRI Test Call. Use **list isdn-testcall** to determine which call is using the port (from the M/T Port column). Either wait for the test call to complete (as indicated in the Start Time and Duration fields in the above display), or abort the test call with **clear isdn-testcall tg/mem**, where tg/mem is determined from the B-channel field of the above display. 1. Retry the command at one-minute intervals a maximum of 5 times. 2. If the test continues to abort and the port is not in use, escalate the problem.
1001	ABORT	System resources required to run this test are not available. 1. Retry the command at one-minute intervals a maximum of 5 times.
1002	ABORT	The system could not allocate time slots for the test. The system may be under heavy traffic conditions, or it may have time slots out-of-service due to TDM-BUS errors. Refer to TDM-BUS Maintenance to diagnose any active TDM-BUS errors. 1. If the system has no TDM-BUS errors and is not handling heavy traffic, repeat the test at one-minute intervals a maximum of 5 times.
1003	ABORT	The system could not allocate a tone receiver for the test. The system may be oversized for the number of tone detectors present, or some tone detectors may be out-of-service. 1. Look for TTR-LEV errors in the Error Log. If present, refer to TTR-LEV Maintenance documentation. 2. Look for TONE-PT errors in the Error Log. If present, refer to TONE-PT Maintenance documentation. 3. If neither condition exists, retry the command at one-minute intervals a maximum of 5 times.

Continued on next page

Table 10-434. TEST #13 Digital Port Loop Around Test — *Continued*

Error Code	Test Result	Description/Recommendation
1004	ABORT	The port was seized by a valid ISDN-PRI Test Call. Use **list isdn-testcall** to determine which call is using the port (from the M/T Port column). Either wait for the test call to complete (as indicated in the Start Time and Duration fields of the above display), or abort the test call with **clear isdn-testcall tg/mem**, where tg/mem is determined from the B-channel field of the above display. 1. Retry the command at one-minute intervals a maximum of 5 times. 2. If the test continues to abort and the port is not in use, escalate the problem.
2000	ABORT	Response to the test request was not received within the allowable time period. 1. Retry the command at one-minute intervals a maximum of 5 times.
2100	ABORT	System resources required to run this test are not available. 1. Retry the test at one-minute intervals a maximum of 5 times.
7	FAIL	Conference test failed on the primary information channel. In most cases, the user may not notice a disruption in service. 1. Run the circuit pack tests to check the Tone Generator circuit pack and the Tone Detector circuit pack via the **test board PCSS** command. 2. Resolve any problems that are detected on the Tone Generator circuit pack or Tone Detector circuit pack. 3. If the Tone Generator and Tone Detector circuit packs are functioning properly, and the test still fails, replace the Maintenance/Test circuit pack.

Continued on next page

Table 10-434. TEST #13 Digital Port Loop Around Test — *Continued*

Error Code	Test Result	Description/Recommendation
14	FAIL	The primary information channel is not transmitting properly. User impact may range from nothing to not being able to use this port. 1. Run the circuit pack tests to check the Tone Generator circuit pack and the Tone Detector circuit pack using **test board PCSS**. 2. Resolve any problems that are detected on the Tone Generator circuit pack or Tone Detector circuit pack. 3. If the Tone Generator and Tone Detector circuit packs are functioning properly, and the test still fails, replace the Maintenance/Test Circuit Pack.
	PASS	The Maintenance/Test Digital Port digital trunk testing capability is operating correctly.

Clear Error Counters (#270)

This test is not an actual test in the strict sense of the word. Many circuit packs have counters in the Angel firmware. These counters are used so that Control Channel Message Set (CCMS) messages are not continuously sent uplink. Using this method, the message is sent once, when the counter reaches some preset threshold, and then not sent again until the counter is cleared.

The ports on the Maintenance/Test circuit pack continually run self-tests, whenever the port is idle. The Angel uses a counter so that the Background Maintenance Failure message is only sent uplink once (this keeps a failed port/circuit pack from flooding the SPE with a string of messages). This test is used to clear the counter, so that if the port continues to fail during or after SPE-demanded testing, the Angel sends a message to indicate that fact.

This test is only used to send a message to the Angel on the Maintenance/Test Circuit Pack. Therefore, this test should never abort or fail.

Table 10-435. TEST #270 Clear Error Counters

Error Code	Test Result	Description/Recommendation
Any	ABORT	This test should never abort.
Any	FAIL	This test should never fail. 1. Retry the command at one-minute intervals a maximum of 5 times.
	PASS	The message to clear the Maintenance/Test circuit pack's counter for Background Maintenance Failures has been sent.

Digital Port Sanity Test (#565)

This test verifies that the port circuitry involved in the digital trunk testing on the Maintenance/Test Digital Port is functioning properly. This circuitry is common to both Maintenance/Test Digital Ports on the Maintenance/Test circuit pack. Therefore, this test is only run for Port 2. The test aborts when run on Port 3, as described in Table 10-436 on page 10-1155.

This test operates by connecting the two Maintenance/Test Digital Ports on the TDM Bus so that they talk and listen to each other. Then four self-tests are attempted: (a) sending data from Port 2 to Port 3 in asynchronous mode; (b) sending data from Port 3 to Port 2 in asynchronous mode; (c) sending data from Port 2 to Port 3 in synchronous mode; and (d) sending data from Port 3 to Port 2 in synchronous mode. The test passes if all four of these self-tests are successful. The test stops as soon as any one of these self-tests fails.

This test aborts if an ISDN Test Call is in progress on either Maintenance/Test Digital Port when the test is requested, or if an ISDN Test Call is initiated while the Digital Port Sanity Test is in progress.

Table 10-436. TEST #565 Digital Port SanityTest

Error Code	Test Result	Description/Recommendation
1000	ABORT	One of the Maintenance/Test Digital Ports is busy with background maintenance. 1. Either wait for the port to become idle, or busyout both Maintenance/Test Digital Ports on the Maintenance/Test circuit pack via **busyout port PCSS02** and **busyout port PCSS03**, respectively. 2. Release the ports (if they were busied out) via **release port PCSS02** and **release port PCSS03**, respectively. 3. Retry the command at one-minute intervals a maximum of 5 times.
1002	ABORT	The system could not allocate time slots for the test. The system may be under heavy traffic conditions, or it may have time slots out-of-service due to TDM-BUS errors. Refer to the TDM-BUS Maintenance documentation to diagnose any active TDM Bus errors. 1. If the system has no TDM-BUS errors, and if not handling heavy traffic, repeat the test at one-minute intervals a maximum of 5 times.
1004	ABORT	The port was seized by a valid ISDN-PRI Test Call. Use the **list isdn-testcall** command to determine which call is using the port (from the M/T Port column). Either wait for the test call to complete (as indicated in the Start Time and Duration fields of the above display), or abort the test call with **clear isdn-testcall tg/mem**, where **tg/mem** is determined from the B-channel field of the above display.
1019	ABORT	An ISDN Test Call is in progress using this Maintenance/Test circuit pack. The Maintenance/Test circuit pack cannot perform a self-test on one of its Digital Ports while an ISDN Test Call is using either of the Digital Ports. Use **list isdn-testcall** to determine which call is using the port (form the M/T Port column). Either wait for the test call to complete (as indicated in the Start Time and Duration fields of the above display), or abort the test call with **clear isdn-testcall tg/mem**, where **tg/mem** is determined from the B-channel field of the above display. 1. Retry the command at one-minute intervals a maximum of 5 times. 2. If the test continues to abort and the port is not in use, escalate the problem.

Continued on next page

Table 10-436. TEST #565 Digital Port SanityTest — *Continued*

Error Code	Test Result	Description/Recommendation
1138	ABORT	This test does not run on Port 3 of the Maintenance/Test circuit pack. This test runs only on Port 2. Look at the results of the Digital Port Sanity Test for Port 2. 1. Run the command again for Port 2 via the **test port PCSS02** or **test port PCSS02 l** command.
2000	ABORT	Response to the test request was not received within the allowable time period.
2100	ABORT	System resources required to run this test are not available.
2500	ABORT	An internal operation failed; the test could not be completed. 1. Retry the command at one-minute intervals a maximum of 5 times.
50	FAIL	The switch was unable to communicate with the port circuitry used for digital trunk testing.
100	FAIL	Data was not sent from Port 2 to Port 3 successfully in asynchronous mode.
101	FAIL	Data was not sent from Port 3 to Port 2 successfully in asynchronous mode.
102	FAIL	Data was not sent from Port 2 to Port 3 successfully in synchronous mode.
103	FAIL	Data was not sent from Port 3 to Port 2 successfully in synchronous mode. 1. Reset the circuit pack via the **busyout board PCSS**, **reset board PCSS**, **release board PCSS** command sequence. 2. Test the port again via the **test port PCSS02 l** command. 3. If the test fails again, replace the circuit pack.
	PASS	The Maintenance/Test Digital Port digital trunk testing capability is operating correctly.

Hook State Inquiry (#566)

This test ensures that the Maintenance/Test Digital Port maintenance software and call processing agree on the on-/off-hook status of the Maintenance/Test Digital Port.

Table 10-437. TEST #566 Hook State InquiryTest

Error Code	Test Result	Description/Recommendation
1	ABORT	Switch hook audit timed out. No response was received from the circuit pack for information about the switch hook state. 1. Retry the command at one-minute intervals a maximum of 5 times. 2. If the test continues to abort, replace the circuit pack and repeat the test.
2100	ABORT	System resources required to run this test are not available. 1. Retry the command at one-minute intervals a maximum of 5 times.
Any	FAIL	Internal System Error. This test should never return a failure. 1. Retry the command at one-minute intervals a maximum of 5 times. 2. If the test continues to fail reset the circuit pack via the **busyout board PCSS**, **reset board PCSS**, **release board PCSS** command sequence. 3. Retry the command at one-minute intervals a maximum of 5 times.
	PASS	Call processing and Maintenance/Test Digital Port maintenance software agree on the Maintenance/Test Digital Port hook state.

M/T-PKT (Maintenance/Test Packet Bus Port)

MO Name (in Alarm Log)	Alarm Level	Initial Command to Run[1]	Full Name of MO
M/T-PKT	Minor	test port PCSSpp l	Maintenance/Test Packet Bus Port
M/T-PKT	Warning	release port PCSSpp	Maintenance/Test Packet Bus Port

1 Where P is the port network number (1 for PPN and 2 or 3 for EPN); C is the carrier designation (A, B, C, D, or E); SS is the address of the slot in the carrier where the circuit pack is located (01, 02, ..., etc.); and pp is the 2-digit port number (for example, 01).

The Maintenance/Test Packet Bus Port is a port (always Port #4) on the TN771D (or later vintage) Maintenance/Test circuit pack, which is required for G3iV1.1-286 or G3iV2-386. The Packet Bus port provides the following Packet Bus maintenance functions:

- Packet Bus fault detection - the ability to detect faults (for example, shorts, open leads) on the Packet Bus autonomously (that is, without SPE involvement).
- Packet Bus reconfiguration - the ability to swap faulty leads with spare leads autonomously so that the Packet Bus remains operational. This is accomplished by sending messages to all Packet circuit packs [for example, ISDN-BRI (TN556)] telling them which spare leads to use on the Packet Bus.

Maintenance/Test Packet Bus Port maintenance ensures that these maintenance functions are operating correctly. The Maintenance/Test Packet Bus Port is alarmed if maintenance determines that the port's maintenance functions are operating incorrectly.

When Maintenance/Test Packet Bus Port maintenance determines that the Packet Bus Port is defective, the Packet Bus fault detection and Packet Bus reconfiguration functions provided by the port are turned off.

Maintenance/Test Packet Bus Port maintenance interacts with Packet Bus maintenance. Therefore, there may be alarms on the Packet Bus when there is a fault on the Maintenance/Test Packet Bus Port. Refer to PKT-BUS (Packet Bus) Maintenance documentation for further information.

Hardware Error Log Entries and Test to Clear Values

M/T-PKT Error Log Entries

Error Type	Aux Data	Associated Test	Alarm Level	On/Off Board	Test to Clear Value
0[1]	0	Any	Any	Any	test port PCSSpp
1 (a)	41018	none	MINOR	ON	test port PCSSpp l r 3
18 (b)	0	busyout port PCSSpp	WARNING	OFF	release port PCSSpp
257 (c)	Any	none	MINOR	ON	
513 (d)	Any	Packet Bus Port Health Inquiry Test (#567)	MINOR	ON	test port PCSSpp r 3

1 Run the Short Test Sequence first. If all tests pass, run the Long Test Sequence. Refer to the appropriate test description and follow the recommended procedures.

Notes:

a. This error indicates a hardware failure with the port circuitry which provides the Packet Bus maintenance functions. Replace the Maintenance/Test circuit pack if the alarm is not resolved by the test command above.

b. The port has been busied out via the **busyout port PCSSpp** command.

c. This error indicates that the Maintenance/Test Packet Bus Port has reconfigured the Packet Bus (that is, swapped a bad lead to a spare). Note that this error is sent up whenever the Maintenance/Test Packet Bus Port is initialized (since the Packet Bus Port reconfigures the Packet Bus to whatever state it determines the Packet Bus is in). This occurs if the circuit pack is inserted, if the system is restarted, or if the port is released from a busyout state. Therefore, it is normal for this error to be present in the error log.

   If the Maintenance/Test Packet Bus Port reconfigures the Packet Bus 12 times within 15 minutes, a Minor alarm is raised. When the Minor alarm is raised, this is an indication that the Packet Bus maintenance functions are not operating correctly, or that many changes are taking place on the Packet Bus (that is, circuit pack insertion or removal). If the system has been in a stable state for more than 15 minutes, try the following procedures:

   1. Reset the Maintenance/Test circuit pack from the Manager I terminal, as follows:
      - Enter the **busyout board PCSS** command.
      - Enter the **reset board PCSS** command.
      - Enter the **release board PCSS** command.

2. Wait 15 minutes.
3. If the error recurs, replace the Maintenance/Test circuit pack.

When this alarm is active, the yellow LED is in one of three states:

- If there is no activity on the Maintenance/Test circuit pack, the yellow LED is off. It is OK to replace the Maintenance/Test circuit pack.
- If there is an indication of an uncorrectable fault on the Packet Bus, the yellow LED will be blinking at a rate of 1 Hz. It is OK to replace the Maintenance/Test circuit pack. Ignore the Packet Bus error indication, since the Maintenance/Test circuit pack has been determined to be defective.
- If there is other activity on the Maintenance/Test circuit pack (that is, ISDN Test Call), or if there is an indication of a correctable fault on the Packet Bus, the yellow LED will be on steady. If there is an ISDN Test Call in progress, it must be halted via the **clear isdn-testcall grp/member** command prior to replacing the circuit pack. Ignore the Packet Bus error indication, since the Maintenance/Test circuit pack has been determined to be defective.

d. This error indicates a failure of the Packet Bus Port Health Inquiry Test. Either the Packet Bus Port has reported a self-test failure, or the SPE is able to communicate with the Maintenance/Test Circuit Pack but not with the Maintenance/Test Circuit Pack Packet Bus Port. Refer to the description of the Packet Bus Port Health Inquiry Test, and follow the instructions indicated for the failure code that matches the Aux Data field.

System Technician-Demanded Tests: Descriptions and Error Codes

Always investigate tests in the order presented in the following tables when inspecting errors in the system. By clearing error codes associated with the *Packet Bus Port Health Inquiry Test,* for example, you may also clear errors generated from other tests in the testing sequence.

Order of Investigation	Short Test Sequence	Long Test Sequence	D/ND[1]
Packet Bus Port Health Inquiry Test (#567)	X	X	ND
Clear Error Counters (#270)		X	ND

1 D = Destructive; ND = Nondestructive

Clear Error Counters (#270)

This test is not an actual test in the strict sense of the word. Many circuit packs have counters in the Angel firmware. These counters are used so that CCMS (Control Channel Message Set) messages are not continuously sent uplink. Using this method, the message are sent once, when the counter reaches some preset threshold, and then not sent again until the counter is cleared.

The ports on the Maintenance/Test circuit pack continually run self-tests, whenever the port is idle. The Angel uses a counter so that the Background Maintenance Failure message is only sent uplink once (this keeps a failed port/circuit pack from flooding the SPE with a string of messages). This test is used to clear the counter, so that if the port continues to fail during or after SPE-demanded testing, the Angel sends a message to indicate that fact.

This test is only used to send a message to the Angel on the Maintenance/Test circuit pack. Therefore, this test should never abort or fail.

Table 10-438. TEST #270 Clear Error Counters

Error Code	Test Result	Description/Recommendation
Any	ABORT	This test should never abort.
Any	FAIL	This test should never fail. 1. Retry the command at one-minute intervals a maximum of 5 times.
	PASS	The message to clear the Maintenance/Test circuit pack's counter for Background Maintenance Failures has been sent.

Packet Bus Port Health Inquiry Test (#567)

This test verifies that the Packet Bus fault detection maintenance function of the Maintenance/Test Packet Bus Port is functioning properly. This is done by having the Maintenance/Test Packet Bus Port perform a self-test. If this self-test passes, then the Packet Bus Port Health Inquiry Test passes. If the self-test fails, or the SPE cannot communicate with the Maintenance/Test Packet Bus Port, then the test fails.

Table 10-439. TEST #567 Packet Bus Port Health Inquiry Test

Error Code	Test Result	Description/Recommendation
2000	ABORT	Response to the test request was not received within the allowable time period.
2100	ABORT	System resources necessary to run this test are not available.
2500	ABORT	An internal operation failed; the test could not be completed. 1. Retry the command at one-minute intervals a maximum of 5 times.
2059	FAIL	The Maintenance/Test Packet Bus Port has reported a failure of the on-board self-test.
2060	FAIL	The Maintenance/Test Packet Bus Port has reported an invalid state for the Packet Bus.
2061	FAIL	The SPE cannot communicate with the Maintenance/Test Packet Bus Port, but is able to communicate with the Maintenance/Test Circuit Pack. 1. Retry the command. 2. If the test continues to fail, replace the Maintenance/Test circuit pack and retry the command. 3. If the test continues to fail, refer to PKT-BUS Maintenance documentation to determine if the M/T-PKT failure is being caused by a Packet Bus fault.
	PASS	The Maintenance/Test Packet Bus Port Packet Bus fault detection capability is operating correctly.

NO-LIC (No License)

MO Name (in Alarm Log)	Alarm Level	Initial Command to Run	Full Name of MO
NO-LIC-	MAJOR	None	NO License

NOTE:
The No License maintenance object NO-LIC is a non-traditional MO. As a result, there are no associated tests or commands that are executed in the traditional manner.

Maintenance object NO-LIC works in concert with maintenance object LIC-ERR to look for any errors/violations associated with the License File. Once a License File error occurs, maintenance object LIC-ERR logs the error, raises an alarm, and starts a timer that is associated with the error. When the timers threshold has been exceeded, MO NO-LIC will cause call processing to be restricted. All call origination will be restricted to outgoing ***emergency numbers***, incoming calls will be restricted to a ***Administration*** (Attendant Console) number.

The license file is loaded onto a switch during initialization of the switch software, restore of translations, and periodically. After initialization, a query is made to a software module called the License Server. This module reads the license file, compares a serial number in the license file to a serial number in hardware, compares the software version in the license with the running software version, and if a match occurs, delivers permission to run to the DEFINITY software along with a new feature mask. The feature mask controls revenue associated options.

Error Log Entries and Test to Clear Values

Table 10-440. NO-LIC Error Log Entries

Error Type	Aux Data	Associated Test	Alarm Level	On/Off Board	Test to Clear Value
1(a)			MAJOR	OFF	See Footnote[1]
257(b)		None	MAJOR	OFF	See Footnote[1]
513(c)		None	MAJOR	OFF	See Footnote[1]
769(d)		None	MAJOR	OFF	See Footnote[1]
1025(e)		None	MAJOR	OFF	See Footnote[1]
1281(f)		None	MAJOR	OFF	See Footnote[1]
1537(g)		None	MAJOR	OFF	See Footnote[1]
1793(h)		None	MAJOR	OFF	See Footnote[1]
2049(i)		None	MAJOR	OFF	See Footnote[1]
2305(j)		None	MAJOR	OFF	See Footnote[1]
2561(k)		None	MAJOR	OFF	See Footnote[1]
2817(l)		None	MAJOR	OFF	See Footnote[1]

1 Clear this Error Type by providing the correct License File per local instructions.

Notes:

a. Error Type 1—This error indicates that the system is in the Serial Number Mismatch state, and in addition that a License Error failure has occurred (See MO LIC-ERR Error Type 1). This error is caused by a serial number mismatch, and the expiration of the six day timer for the processor located in carrier ***A*** of a duplicated G3si. Call processing will be restricted to outgoing calls to emergency numbers, and incoming calls to an Administration number.

b. Error Type 257—This error indicates that the system is in the Serial Number Mismatch state, and in addition that a License Error failure has occurred (See MO LIC-ERR Error Type 257). This error is caused by a serial number mismatch, and the expiration of the six day timer for the processor located in carrier ***B*** of a duplicated G3si. Call processing will be restricted to outgoing calls to emergency numbers, and incoming calls to an Administration number.

c. Error Type 513—This error indicates that the license has expired, and in addition that a License Error failure has occurred (See MO LIC-ERR Error Type 513) and the six day timer has ***expired***. Call processing will be restricted to outgoing calls to emergency numbers, and incoming calls to an Administration number.

d. Error Type 769—This error indicates that the system is in the Feature Usage Exceeds Limits mode, and in addition that a License Error failure has occurred (See MO LIC-ERR Error Type 769).The feature usage has exceeded limits, and the six day timer has expired. Call processing will be restricted to outgoing calls to emergency numbers, and incoming calls to an Administration number.

e. Error Type 1025—This error indicates that maintenance software detected that the Survivable Remote Processor is serving as the ***active processor (in the PPN)*** in violation of the license agreement, and a license file error has occurred. Call processing will be restricted to outgoing calls to emergency numbers, and incoming calls to an Administration number.

f. Error Type 1281—This error indicates that a new license was not installed after an upgrade. The 4-hour timer has expired and a License Error failure has occurred (see MO LIC-ERR Error Type 1281). Call processing software will stop all new call originations except calls to an emergency number, or incoming calls to an administration number.

g. Error Type 1537—This error indicates the License File is missing or corrupted. Maintenance software will notify Call processing software to stop all new call originations except calls to an emergency number, or incoming calls to an administration number.

h. Error Type 1793—This error indicates a Software Version Mismatch has occurred. Maintenance software will notify Call processing software to stop all new call originations except calls to an emergency number, or incoming calls to an administration number.

i. Error Type 2049— This error indicates that a Survivable Remote Processor is being used as a ***PPN processor***. Maintenance software will notify Call processing software to stop all new call originations except calls to an emergency number, or incoming calls to an administration number.

j. Error Type 2305—This error indicates that the Offer Category of the License does not match the Offer Category in translations. Maintenance software will notify Call processing software to stop all new call originations except calls to an emergency number, or incoming calls to an administration number.

k. Error Type 2561—This error indicates a License Response time out (60 sec. timer) has expired while waiting to receive a response message after issuing ***a license request***. Maintenance software will notify Call processing software to stop all new call originations except calls to an emergency number, or incoming calls to an administration number.

l. Error Type 2817—This error indicates a License Response time out (60 sec. timer) has expired while waiting to receive a response message after issuing ***a timer request***. Maintenance software will notify Call processing software to stop all new call originations except calls to an emergency number, or incoming calls to an administration number.

System Technician-Demanded Tests: Descriptions and Error Codes

See test license.

OPS-LINE (DS1 OPS Line)

MO Name (in Alarm Log)	Alarm Level	Initial Command to Run	Full Name of MO
OPS-LINE	MINOR	test station <ext> l	DS1OPS Line
OPS-LINE	WARNING	test station <ext>	DS1OPS Line

An analog Off-Premises Station (OPS) can be connected to the system through a DS1 link. A TN767 DS1 Interface circuit pack supports up to 24 DS1OPSs. Since the DS1OPS is an analog telephone set, a channel multiplexer is necessary as the remote DS1 endpoint that converts the digital signal of a DS1 port to the OPS Line and vice versa. See Figure 10-77 for details.

The DS1OPS Line Maintenance provides a strategy to maintain an OPS Line via a port of the DS1 Interface circuit pack. The strategy covers initialization tests, periodic tests, system technician-demanded tests, and alarm resolution and escalation. Two service states are specified in a DS1OPS Line maintenance. They are: *out-of-service* in which the line is in a deactivated state and cannot be used for either incoming or outgoing calls; *in-service* in which the line is in an activated state and can be used for both incoming and outgoing calls. If the DS1 Interface circuit pack is out-of-service, then all lines on the DS1 Interface circuit pack are put into the out-of-service state, and a Warning alarm is raised.

For maintenance of the remote DS1 endpoint (for example, Channel Division Multiplexer, D4 Channel Bank), refer to the maintenance documentation from its vendor for details.

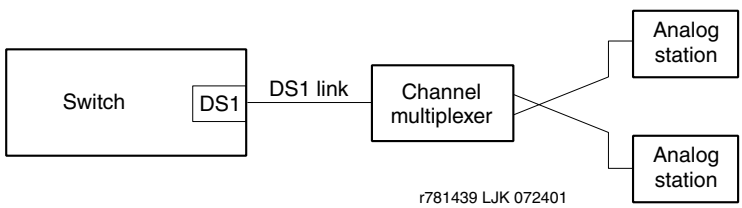

Figure 10-77. DS1 OPS Line Interactions

Hardware Error Log Entries and Test to Clear Values

DS1 OPS Maintenance Error Log Entries

Error Type	Aux Data	Associated Test	Alarm Level	On/Off Board	Test to Clear Value
0[1]	0	Any	Any	Any	test station <ext> sh r 1
15 (a)	Any	Audit and Update Test (#36)			
18 (b)	0	busyout station <ext>	WARNING	OFF	release station <ext>
130 (c)		None	WARNING	ON	test station <ext>
1281		Conference Circuit Test (#7)	MINOR	ON	test station <ext> l
1537		NPE Crosstalk Test (#6)	MINOR	ON	test station <ext> l
1793 (d)					test circuit pack PCSS l

1 Run the Short Test Sequence first. If all tests pass, run the Long Test Sequence. Refer to the appropriate test description and follow the recommended procedures.

Notes:

a. This is a software audit error that does not indicate any hardware malfunction. Run the Short Test Sequence and investigate associated errors (if any).

b. The DS1OPS Line has been busied out by a **busyout station <ext>** command. No calls can be made on this line.

c. This error type indicates that the circuit pack has been removed or has been insane for more than 11 minutes. To clear the error, reinsert or replace the circuit pack.

d. Error Type 1793 indicates a problem with the DS1 Interface circuit pack. Since there is no error against the OPS-LINE port, no alarm is raised against the OPS-LINE port. However, there should be errors logged against the DS1 Interface circuit pack. Look for DS1-BD errors in the Hardware Error Log and follow procedures provided in the DS1-BD (DS1 Interface Circuit Pack) Maintenance documentation.

System Technician-Demanded Tests: Descriptions and Error Codes

Always investigate tests in the order presented in the table below when inspecting errors in the system. By clearing error codes associated with the *NPE Crosstalk Test,* for example, you may also clear errors generated from other tests in the testing sequence.

Order of Investigation	Short Test Sequence	Long Test Sequence	D/ND[1]
NPE Crosstalk Test (#6)		X	ND
Conference Circuit Test (#7)		X	ND
DS1OPS Switchhook Inquiry Test (#312)	X	X	ND
Audit and Update Test (#36)	X	X	ND

1 D = Destructive; ND = Nondestructive

NPE Crosstalk Test (#6)

One or more NPEs reside on each circuit pack with a TDM Bus interface. The NPE controls port connectivity and gain, and provides conferencing functions on a per-port basis The NPE Crosstalk Test verifies that this port's NPE channel talks on the selected time slot and never crosses over to time slots reserved for other connections. If the NPE is not working correctly, one-way and noisy connections may be observed. This test is usually only part of a port's Long Test Sequence and takes about 20 to 30 seconds to complete.

Table 10-441. TEST #6 NPE Crosstalk Test

Error Code	Test Result	Description/Recommendation
	ABORT	Could not allocate system resources to run this test or an internal system error (software) occurred. 1. Retry the command at 1-minute intervals a maximum of 5 times.
1000	ABORT	System resources required to run this test are not available. The port may be in use on a valid call. Use **status station** or **status trunk** command to determine when the port is available for testing. 1. Retry the command at one-minute intervals a maximum of 5 times. 2. If the test continues to abort, and the port is not in use, escalate the problem.
1001	ABORT	Could not allocate the necessary system resources to run this test. 1. Retry the command at one-minute intervals a maximum of 5 times.
1002	ABORT	The system could not allocate time slots for the test. The system may be under heavy traffic conditions or it may have time slots out-of-service due to TDM-BUS errors. Refer to TDM-BUS (TDM Bus) Maintenance documentation to diagnose any active TDM-BUS errors. 1. If the system has no TDM-BUS errors and is not handling heavy traffic, repeat the test at one-minute intervals a maximum of 5 times.
1003	ABORT	The system could not allocate a tone receiver for the test. The system may be oversized for the number of Tone Detectors present or some Tone Detectors may be out-of-service. 1. Look for TTR-LEV errors in the Error Log. If present, refer to TTR-LEV (TTR Level) Maintenance documentation. 2. Look for TONE-PT errors in the Error Log. If present, refer to TONE-PT (Tone Generator) Maintenance documentation. 3. If neither condition exists, retry the test at one-minute intervals a maximum of 5 times.

Continued on next page

Table 10-441. TEST #6 NPE Crosstalk Test — *Continued*

Error Code	Test Result	Description/Recommendation
1004	ABORT	The test was aborted because the port was seized by a user for a valid call. Use **status station** command to determine the service state of the port. If the service state indicates that the port is in use, then the port is unavailable for certain tests. You must wait until the port is idle before retesting. 1. Retry the command at 1-minute intervals a maximum of 5 times. 2. If the test continues to abort, and the port is not in use, escalate the problem.
1020	ABORT	The test did not run due to an an already existing error on the specific port or due to a more general error on the circuit pack. 1. Examine the error log for existing errors against this port or the circuit pack and attempt to diagnose the already existing error. (Error code 1793 indicates a problem with the DS1 interface board, and any problems on the associated DS1-BD or UDS1-BD should be resolved first.)
2000	ABORT	Response to the test request was not received within the allowable time period. 1. Retry the command at 1-minute intervals a maximum of 5 times. 2. If the test aborts with error code 2000 again, run short test sequence on the associated DS1-BD or UDS1-BD. If tests 138 through 145 on the associated DS1-BD or UDS1-BD are also aborting with error code 2000, hyperactivity on the board or facility is indicated. In this case, the hyperactivity problem should be dealt with first.
2100	ABORT	System resources required for this test are not available. 1. Retry the command at one-minute intervals a maximum of 5 times.

Continued on next page

Table 10-441. TEST #6 NPE Crosstalk Test — *Continued*

Error Code	Test Result	Description/Recommendation
Any	FAIL	The test failed. This can be due to on-board or off-board problems. Off-board problems of concern include EXP-INTF faults, TDM-BUS faults, and faults associated with the tone detectors/tone generators. Clear all off-board problems before replacing the board. Keep in mind that a TDM-BUS problem is usually the result of a faulty board connected to the backplane or bent pins on the backplane. 1. Look for TONE-BD and/or TONE-PT errors in the error log. If present, refer to the TONE-BD Maintenance documentation and to the TONE-PT Maintenance documentation. 2. Retest when the faults from step 1 are cleared.
	PASS	The port is correctly using its allocated time slots. User-reported troubles on this port should be investigated using other port tests and by examining station, trunk, or external wiring.
0	NO BOARD	The test could not relate the internal ID to the port (no board). This could be due to incorrect translations, no board is inserted, an incorrect board is inserted, or an insane board is inserted. 1. Check to ensure that the board translations are correct. Use the **list config** command, and resolve any problems that are found. 2. If the board was found to be correctly inserted in step 1, issue the **busyout board** command. 3. Issue the **reset board** command. 4. Issue the **release busy board** command. 5. Issue the **test board long** command. This should re-establish the linkage between the internal ID and the port. If this is not the case, dispatch to check to ensure that there is a valid board inserted.

Conference Circuit Test (#7)

One or more NPEs reside on each circuit pack with a TDM Bus interface. The NPE controls port connectivity and gain, and provides conferencing functions on a per-port basis. The Conference Circuit Test verifies that the NPE channel for the port being tested can correctly perform the conferencing function. The NPE is instructed to listen to several different tones and conference the tones together. The resulting signal is then measured by a Tone Detector port. If the level of the tone is within a certain range, the test passes.

Table 10-442. TEST #7 Conference Circuit Test

Error Code	Test Result	Description/Recommendation
	ABORT	System resources required for this test are not available. 1. Retry the command at one-minute intervals a maximum of 5 times.
1000	ABORT	System resources required to run this test are not available. The port may be in use on a valid call. Use the **status station** or **status trunk** command to determine when the port is available for testing. 1. Retry the command at one-minute intervals a maximum of 5 times. 2. If the test continues to abort, and the port is not in use, escalate the problem.
1002	ABORT	The test was aborted because the system could not allocate time slots for the test. The system might be under heavy traffic conditions, or it might have time slots out of service due to TDM-BUS errors. (The **status health** command may be used to determine whether the system is experiencing heavy traffic.) Refer to the TDM-BUS (TDM bus) Maintenance documentation to diagnose any active TDM-BUS errors. 1. If the system has no TDM-BUS errors, is not handling heavy traffic, and the port status is idle, retry the command at 1-minute intervals for a maximum of 5 times.
1003	ABORT	The system could not allocate a tone receiver for the test. The system may be oversized for the number of tone detectors present or some of the tone detectors may be out of service. Issue the **list measurements tone-receiver** command to display basic information about the system's tone receivers. 1. Look for TTR-LEV errors in the error log. If present, refer to the TTR-LEV Maintenance documentation. 2. Look for TONE-PT errors in the error log. If present, refer to the TONE-PT Maintenance documentation. 3. If neither condition exists, retry the test at 1-minute intervals for a maximum of 5 times.

Continued on next page

Table 10-442. TEST #7 Conference Circuit Test — *Continued*

Error Code	Test Result	Description/Recommendation
1004	ABORT	The port has been seized by a user for a valid call. Use **status station** or **status trunk** command to determine when the port is available for testing. 1. Retry the command at one-minute intervals a maximum of 5 times. 2. If the test continues to abort, and the port is not in use, escalate the problem.
1018	ABORT	The test was disabled via translation. 1. You may want to determine why the test has been disabled before you enable it. 2. To enable the test for the particular analog station being tested, enter the 'change station extension' command, and then change the 'Test' field on the 'Station' form from 'n' to 'y.'
1020	ABORT	The test did not run due to an already existing error on the specific port or due to a more general error on the circuit pack. 1. Examine the error log for existing errors against this port or the circuit pack and attempt to diagnose the already existing error. (Error code 1793 indicates a problem with the DS1 interface board, and any problems on the associated DS1-BD or UDS1-BD should be resolved first.)
2000	ABORT	The test was aborted because response to the test was not received within the allowable time period. 1. Retry the command at 1-minute intervals for a maximum of 5 times. 2. If the test aborts with error code 2000 again, run short test sequence on the associated DS1-BD or UDS1-BD. If tests 138 through 145 on the associated DS1-BD or UDS1-BD are also aborting with error code 2000, hyperactivity on the board or facility is indicated. In this case, the hyperactivity problem should be dealt with first.
2100	ABORT	System resources required for this test are not available. 1. Retry the command at one-minute intervals a maximum of 5 times.

Continued on next page

Table 10-442. TEST #7 Conference Circuit Test — *Continued*

Error Code	Test Result	Description/Recommendation
Any	FAIL	The NPE of the tested port did not conference the tones correctly. This can cause noisy and unreliable connections. 1. Enter the **list configuration board PCSS** command. If the circuit pack is a TN767B vintage 8 or 9, replace the circuit pack with a TN767C V3 or later. The error log may have error type 1281 entries. 2. Test all administered trunks on the board. If one fails, this could be an off-board problem (such as an incoming seizure or an off-hook port seizure during the test). Retest the board. 3. If all of the ports fail, check the CARR-POW (see note below). 4. If several ports fail, check the error log for TONE-BD or TONE-PT errors. If there are such errors, take the appropriate action. When the TONE errors have cleared, rerun the test. 5. If the retry passes and troubles have been reported, coordinate isolation with the far-end PBX. Make sure that the near-end and far-end switches and any NTCE equipment (the CSUs) have the correct administration.

Continued on next page

Table 10-442. TEST #7 Conference Circuit Test — *Continued*

Error Code	Test Result	Description/Recommendation
	FAIL *(cont'd.)*	6. Replace the circuit pack. **NOTE:** If the conference circuit test fails for all ports on a circuit pack, a -5 volt power problem is indicated. If a TN736 or TN752 power unit circuit pack is present, either the 631DB AC power unit or the 676B DC power unit may be defective. (The 631DB power unit is used in a medium cabinet powered by an AC source. The 645B power unit is used in a medium cabinet powered by a DC power source.) The system may contain a TN736 or TN752 power unit or a 631DB AC power unit, but not both types of power units. To investigate problems with a 631DB AC power unit, refer to the CARR-POW (carrier port power unit for AC-powered systems) Maintenance documentation. To investigate problems with a 645B DC power unit, refer to the CARR-POW (carrier port power unit for DC-powered systems) Maintenance documentation. If a red LED on TN736 or TN752 power unit circuit pack is on, replace the pack.
	PASS	The port can correctly conference multiple connections. User-reported troubles on this port should be investigated using other port tests and by examining station, trunk, or external wiring.
0	NO BOARD	The test could not relate the internal ID to the port (no board). This could be due to incorrect translations, no board is inserted, an incorrect board is inserted, or an insane board is inserted. 1. Check to ensure that the board translations are correct. Use the **list config** command, and resolve any problems that are found. 2. If the board was found to be correctly inserted in step 1, issue the **busyout board** command. 3. Issue the **reset board** command. 4. Issue the **release busy board** command. 5. Issue the **test board long** command. This should re-establish the linkage between the internal ID and the port. If this is not the case, dispatch to check to ensure that there is a valid board inserted.

Audit and Update Test (#36)

This test sends port level translation data from switch processor to the DS1 Interface circuit pack to assure that the trunk's translation is correct. Translation updates include the following data: trunk type (in/out), dial type, timing parameters, and signaling bits enabled. The port audit operation verifies the consistency of the current state of the trunk as kept in the DS1 Interface circuit pack and in the switch software.

Table 10-443. TEST #36 Audit and Update Test

Error Code	Test Result	Description/Recommendation
	ABORT	Internal System Error. 1. Retry the command at one-minute intervals a maximum of 5 times.
1000	ABORT	The test was aborted because system resources required to run this test were not available. The port may be busy with a valid call. Use the **display port PCSSpp** command to determine the station extension of the port. Use the **status station** command to determine the service state of the port. If the service state indicates that the port is in use, then the port is unavailable for certain tests. You must wait until the port is idle before retesting. 1. If the port is idle, retry the command at 1-minute intervals a maximum of 5 times.
1006	ABORT	The test was aborted because the station is out of service. This condition may be accompanied by an error type 18 entry in the error log. You may want to determine why the station was taken out of service. (When stations are taken out of service by maintenance software, the problems that preceded that point must be cleared.) 1. Use the **status station** command to check the service state of the port. If the port is indeed out of service, enter the **release station** command to bring the station back into service. 2. Retry the command at 1-minute intervals a maximum of 5 times. 3. If the test continues to abort and the service state indicates that the station is in service and idle, escalate the problem.

Continued on next page

Table 10-443. TEST #36 Audit and Update Test — *Continued*

Error Code	Test Result	Description/Recommendation
2000	ABORT	The test was aborted because response to the test was not received within the allowable time period. 1. Retry the command at 1-minute intervals for a maximum of 5 times. 2. If the test aborts with error code 2000 again, run short test sequence on the associated DS1-BD or UDS1-BD. If tests 138 through 145 on the associated DS1-BD or UDS1-BD are also aborting with error code 2000, hyperactivity on the board or facility is indicated. In this case, the hyperactivity problem should be dealt with first.
2100	ABORT	System resources required for this test are not available. 1. Retry the command at one-minute intervals a maximum of 5 times.

Continued on next page

Table 10-443. TEST #36 Audit and Update Test — *Continued*

Error Code	Test Result	Description/Recommendation
7 or 8	FAIL	Test failed due to internal system error. Do not replace port board. ■ Error code 7: the failure occurred during station translation download (to DS1 Interface circuit pack). ■ Error code 8: the failure occurred during station ringer update. 1. Retry the command at 1-minute intervals a maximum of 5 times.
	PASS	Trunk translation has been updated successfully. The current trunk states kept in the DS1 Interface circuit pack and switch software are consistent.
0	NO BOARD	The test could not relate the internal ID to the port (no board). This could be due to incorrect translations, no board is inserted, an incorrect board is inserted, or an insane board is inserted. 1. Check to ensure that the board translations are correct. Use the **list config** command, and resolve any problems that are found. 2. If the board was found to be correctly inserted in step 1, issue the **busyout board** command. 3. Issue the **reset board** command. 4. Issue the **release busy board** command. 5. Issue the **test board long** command. This should re-establish the linkage between the internal ID and the port. If this is not the case, dispatch to check to ensure that there is a valid board inserted.

DS1 OPS Switchhook Inquiry Test (#312)

This test initiates the Switchhook Audit Test. The test queries the switchhook state of the Off-Premises-Station in switch software. If the state in switch software disagrees with the state on the DS1 Interface circuit pack. The state in the switch software is updated to match the state on the DS1 Interface circuit pack.

Table 10-444. TEST #312 DS1OPS Switchhook Inquiry Test

Error Code	Test Result	Description/Recommendation
	ABORT	Internal System Error. 1. Retry the command at one-minute intervals a maximum of 5 times.
1004	ABORT	The port has been seized by a user for a valid call. Use the **status station** command to determine when the port is available for testing. 1. Retry the command at one-minute intervals a maximum of 5 times. 2. If the test continues to abort, and the port is not in use, escalate the problem.
1005	ABORT	Test failed due to incompatible configuration administered in station administration. 1. Verify the station administration is the station assigned to Port 24 of the DS1 Interface circuit pack while common channel signaling is specified.
1006	ABORT	The test was aborted because the station is out of service. This condition may be accompanied by an error type 18 entry in the error log. You may want to determine why the station was taken out of service. (When stations are taken out of service by maintenance software, the problems that led up to that must be cleared.) 1. Use the **status station** command to check the state of the port. If the port is indeed out of service, enter the **release station** command to bring the station back into service. 2. Retry the command at 1-minute intervals a maximum of 5 times. 3. If the test continues to abort, and the station is in the in-service/idle state, escalate the problem.
1020	ABORT	The DS1 Interface circuit pack is out-of-service. 1. Look for DS1-BD errors in Hardware Error Log. If present, refer to the DS1-BD (DS1 Interface Circuit Pack) Maintenance documentation. 2. Retry the command.

Continued on next page

Table 10-444. TEST #312 DS1OPS Switchhook Inquiry Test — *Continued*

Error Code	Test Result	Description/Recommendation
2000	ABORT	The test was aborted because response to the test was not received within the allowable time period. 1. Retry the command at 1-minute intervals for a maximum of 5 times. 2. If the test aborts with error code 2000 again, run short test sequence on the associated DS1-BD or UDS1-BD. If tests 138 through 145 on the associated DS1-BD or UDS1-BD are also aborting with error code 2000, hyperactivity on the board or facility is indicated. In this case, the hyperactivity problem should be dealt with first. 3. If the test continues to abort and the board is OK, escalate the problem.
2012	ABORT	The test was aborted due to a system error.
2100	ABORT	Could not allocate the necessary system resources to run this test. 1. Retry the command at 1-minute intervals for a maximum of 5 times.

Continued on next page

Table 10-444. TEST #312 DS1OPS Switchhook Inquiry Test — *Continued*

Error Code	Test Result	Description/Recommendation
1	FAIL	Internal System Error. 1. Look for DS1-BD errors in the Hardware Error Log. If present, refer to the DS1-BD (DS1 Interface Circuit Pack) Maintenance documentation. 2. If a channel multiplexer is used as the remote DS1 endpoint to which the station connects, refer to the multiplexer vendor's maintenance document for diagnosis. 3. Retry the command at one-minute intervals a maximum of 5 times.
	PASS	The station hook states in both switch software and DS1 Interface circuit pack are consistent.
0 2012	NO BOARD	The test could not relate the internal ID to the port (no board). This could be due to incorrect translations, no board is inserted, an incorrect board is inserted, or an insane board is inserted. 1. Check to ensure that the board translations are correct. Use the **list config** command, and resolve any problems that are found. 2. If the board was found to be correctly inserted in step 1, issue the **busyout board** command. 3. Issue the **reset board** command. 4. Issue the **release busy board** command. 5. Issue the **test board long** command. This should re-establish the linkage between the internal ID and the port. If this is not the case, dispatch to check to ensure that there is a valid board inserted.

PDMODULE, TDMODULE (Data Module)

MO Name (in Alarm Log)	Alarm Level	Initial Command to Run[1]	Full Name of MO
PDMODULE[2,3]	MINOR	test port PCSSpp l	Processor Data Module
PDMODULE	WARNING	test port PCSSpp sh	Processor Data Module
TDMODULE[2,3]	MINOR	test port PCSSpp l	Trunk Data Module
TDMODULE	WARNING	test port PCSSpp sh	Trunk Data Module

1 Where P is the port network number (1 for PPN and 2 or 3 for EPN); C is the carrier designation (for example, A, B, C, D, or E); SS is the address of the slot in the carrier where the circuit pack is located (for example, 01, 02, ..., etc.); and pp is the 2-digit port number (for example, 01).

2 The DTDM is considered to be part of the DIG-LINE MO. Refer to the Digital Line testing section for DTDM or linked Data Adapter (DA) failures.

3 Some of the alarms that are logged due to PDMODULE and TDMODULE test failures may be related to circuit pack problems reported during the Common Port Circuit Pack testing phase. Refer to the XXX-BD (Common Port Circuit Pack) Maintenance documentation for information about testing the Digital Line circuit packs.

As illustrated in Figure 10-78 on page 10-1183, data modules provide an interface between the system TN754, TN784, TN413 [G3iV2-386], or TN754 [G3iV2-386] Digital Line circuit pack and data equipment such as terminals, host computers, and modems. Data modules are used for both dial-up and permanent circuit-switched data calls. DA data modules provide this interface when the system uses a TN2136 [G3iV2-386] Digital Line circuit pack.

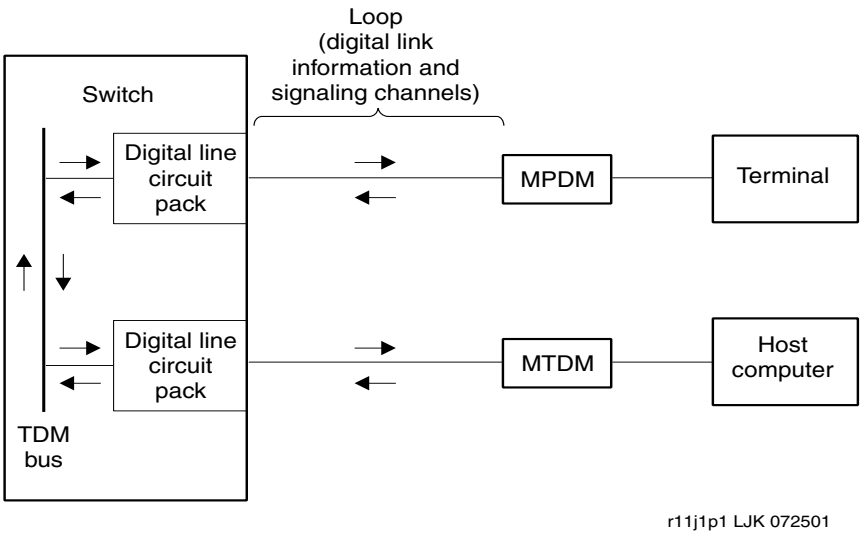

Figure 10-78. Typical Data Module Application

The MPDM provides an interface for Data Terminal Equipment (terminals), and the MTDM (see Note) provides an interface for Data Communications Equipment (transmission equipment such as modems).

NOTE:
Early versions of these data modules were referred to as PDMs and TDMs, respectively. Later models are designed to provide various customer interfaces through the use of interchangeable interface modules and, therefore, are called modular data modules. Both versions are supported by the tests described in this section.

The PBX loop or digital link between a data module and the Digital Line port supports two logical information channels and one signaling channel. MPDMs and MTDMs use the primary information channel for data communications and the signaling channel for dialing and call supervision. The secondary information channel can be used to support a second data module on a shared digital port.

Data modules are not only used for data calls between terminals, computers, and data communications equipment, but are also used as interfaces to equipment associated with system features such as System Administration, CDR, MCS, ACD, DCS, and AUDIX. Maintenance tests for data modules associated with those services are covered by tests other than those described here. (See PI-LINK, PMS-PRNT/JNL-PRNT, and PMS-LINK Maintenance documentation.)

Maintenance of MPDMs and MTDMs is closely related to, and interacts with, the Digital Line circuit pack maintenance in some instances and some of the results of testing MPDMs and MTDMs may be affected by the health of the Digital Line circuit pack. This interaction should be kept in mind when investigating the cause of reported data module problems.

Data modules provide a variety of option switches to allow the customer to select data rates, parity, keyboard dialing, local, and remote loop back, etc. An incorrect setting of those switches does not affect error and alarm information or test results described in this section, but it may result in an inoperable condition. Refer to the Installation Manual provided with the data module for more information about those options.

The DA data module provides an AT (Hayes) type interface that allows the customer to select data rates, parity, local, interface mode (**linked** to digital phone or **stand-alone**), and remote loop back, etc. An incorrect selection does not affect error and alarm information or test results described in this section, but it may result in an inoperable condition.

There are instances in this document where the service state of a data module is mentioned. It is helpful to understand what is meant by the different service states that may exist. An explanation of these service states follows:

- Out-of-Service—The port, and thus the data module, have been removed from service. A busyout of a port or removal of the associated Digital Line circuit pack causes the data module to be placed in the out-of-service state. Failure of the NPE Crosstalk Test (Test #9) also takes a port out-of-service.
- Disconnected—The port is administered but the associated digital link does not respond. An administered port is put in a disconnected state after system booting or circuit pack insertion, until a “link reset pass” message is received from firmware on the associated circuit pack.
- In-Service—Once the PBX software has received a “link reset pass” message from the Digital Line port, the port is placed in the in-service state. In case the “link reset pass” message is missed, and an off-hook message is received while the port is in the disconnected state, maintenance software runs an ID request test and the port is put back in service if a correct response is received.

  If the link is disconnected, the port returns to the disconnect state. Note that it takes a few minutes (less than five) for the state of a data module port to change from in-service to disconnected after the data module is disconnected from the local PBX loop.

Hardware Error Log Entries and Test to Clear Values

PDMODULE and TDMODULE Error Log Entries

Error Type	Aux Data	Associated Test	Alarm Level	On/Off Board	Test to Clear Value
0[1]	0	Any	Any	Any	test port PCSSpp sh r 1
1 (a)	40987	None	WARNING	OFF	
1 (b)	1 to 20	None	WARNING	OFF	
15 (c)	Any	None			
18 (d)	0	busyout port PCSSpp	WARNING	OFF	release port PCSSpp
257 (e)	40971	None			
513[2]	0	Data Module Audits Test (#17)	WARNING (j)	OFF	test port PCSSpp sh r 6
769 (f)	40988	None	WARNING	OFF	
1281	Any	Data Module Audits Test (#17)	WARNING	OFF	test port PCSSpp sh r 4
1537 (g)	40968	None	WARNING	OFF	
1793		Information Channel and Control Channel Loop Around Test (#13)	MINOR	ON	test port PCSSpp l r 3
2049		NPE Crosstalk Test (#9)	MINOR	ON	test port PCSSpp l r 3
2305 (h)	32770	None			
2305 (i)	40967	None			
2561		Data Module Internal Loop Around Test (#175)	WARNING	OFF	test port PCSSpp l r 5
2817 (k)		Link GPP Loop (183) Against Links	MAJOR	ON	
3841 (l)		NONE			

1 Run the Short Test Sequence first. If all tests pass, run the Long Test Sequence. Refer to the appropriate test description and follow the recommended procedures.

2 G3iV1.1-286 and G3iV2-386 only.

Notes:

a. Could experience a noisy port or link. This is an off-board problem detected by the port circuit. Check for faulty wiring, check for a defective data module, or reduce the cabling distance between the data module and the PBX (5000 feet for 24-gauge wire and 4000 feet for 26-gauge wire; see Note). If the problem still exists, replace the circuit pack. Once the problem has been resolved, the alarm is retired automatically within 60 minutes.

   The DA module is not phantom-powered from the port and hence its range is limited by the Italtel digital phone's limit (0.7 km, 2300 feet, on 26-gauge wire or 1.8 km, 5900 feet, on 22-gauge, 0.6 mm, wire) if in **linked mode**, or by the maximum length of loop allowed from the Digital Line Interface (DLI) component (up to 3.5 km, about 2 miles, with 22-gauge, 0.6 mm, wire) if in **stand-alone mode**.

   NOTE:
   Refer to the *DEFINITY Communications System Generic 1 and Generic 3i Wiring,* 555-204-111.

b. This error type and auxiliary data occur when at least 15 off-board problems have been detected with the link to the data module. When an error with the link is detected, an on-board counter is incremented.

   The user could experience a noisy port or link. This is an off-board problem detected by the port circuit. Check for faulty wiring, check for a faulty data module, or reduce the cabling distance between the data module and the PBX (5000 feet for 24-gauge wire and 4000 feet for 26-gauge wire; see the next Note). If the problem still exists, replace the circuit pack. Once the problem has been resolved, the alarm is retired automatically within 60 minutes.

   The DA module is not phantom-powered from the port and hence its range is limited by the Italtel digital phone's limit (0.7 km, 2300 feet, on 26-gauge wire or 1.8 km, 5900 feet, on 22-gauge, 0.6 mm, wire) if in **linked mode**, or by the maximum length of loop allowed from the Digital Line Interface (DLI) component (up to 3.5 km, about 2 miles, with 22-gauge, 0.6 mm, wire) if in **stand-alone mode**.

   NOTE:
   Refer to the *DEFINITY Communications System Generic 1 and Generic 3i Wiring,* 555-204-111.

c. This is an internal type error that occurs when an audit request fails.

d. This error type is logged when the port in question is busied out by maintenance personnel. Make sure that the port is released from busyout.

e. There are problems with transmitting to the data module. This is usually an on-board problem and can be ignored if no user complaints are received. Otherwise, check for faulty wiring.

f. This error indicates that EPF has been turned off due to the overcurrent condition at the data module. Make sure that the data module is connected. Look for faulty wiring or a defective data module, or reduce the cabling distance between the data module and the PBX (5000 feet for 24-gauge wire and 4000 feet for 26-gauge wire; see Note). If the problem still exists, it may be due to the fact that the PTC is in the “tripped” position due to a short on the power line. This can be corrected by removing the short, unplugging the data module from the wall for about 30 seconds, and plugging it back in. If the problem persists, replace the Digital Line circuit pack. Once the problem has been resolved, the alarm is retired after a predetermined period of time since this counter uses a “leaky bucket” strategy.

   The DA module is not phantom-powered from the port and hence its range is limited by the Italtel digital phone’s limit (0.7 km, 2300 feet, on 26-gauge wire or 1.8 km, 5900 feet, on 22-gauge, 0.6 mm, wire) if in **linked mode**, or by the maximum length of loop allowed from the Digital Line Interface (DLI) component (up to 3.5 km, about 2 miles, with 22-gauge, 0.6 mm, wire) if in **stand-alone mode**.

   NOTE:
   Refer to the *DEFINITY Communications System Generic 1 and Generic 3i Wiring,* 555-204-111.

g. An in-line maintenance error has generated an off-board warning due to some problem with the link to the data module. This can be ignored if no user complaints are received. Otherwise, make sure the data module is connected, check for faulty wiring, check for a defective data module, or reduce the cabling distance between the data module and the PBX (5000 feet for 24-gauge wire and 4000 feet for 26-gauge wire, see Note). If the problem still exists, replace the circuit pack. Once the problem has been resolved, the alarm is retired automatically within 90 minutes.

   The DA module is not phantom-powered from the port and hence its range is limited by the Italtel digital phone’s limit (0.7 km, 2300 feet, on 26-gauge wire or 1.8 km, 5900 feet, on 22-gauge, 0.6 mm, wire) if in **linked mode**, or by the maximum length of loop allowed from the Digital Line Interface (DLI) component (up to 3.5 km, about 2 miles, with 22-gauge, 0.6 mm, wire) if in **stand-alone mode**.

   NOTE:
   Refer to the *DEFINITY Communications System Generic 1 and Generic 3i Wiring,* 555-204-111.

h. This indicates that the data equipment went off-hook while the associated link was being initialized (in a disconnected state). Use the **status data-module** command to determine the state of the data module. The off-hook should have changed the service state to in-service. No system technician action is necessary.

i. This is the resulting code that is generated when the link between the circuit pack and the data module is successfully reset. The link is normally reset when the circuit pack associated with an administered port is first plugged in (assuming that the data module is already in place and connected to the associated port), when a port is first administered (assuming the associated circuit pack is plugged in and that the data module is connected to the associated port), or when a data module is first connected to an administered port. No system technician action is necessary.

j. This warning off-board alarm occurs only for G3iV1.1-286 or G3iV2-386. The alarm occurs when it appears to the system that a DCP endpoint has been disconnected.

k. A DCP endpoint may have been disconnected.

l. This endpoint is part of processor link. Link initialization has failed (or demand test for #183 for PI links has failed) and is indicating the associated PDM as the cause. Check the PDM, the wiring to the PDM and the link to the far end (i.e. AUDIX DCS, etc.) to resolve the problem.

System Technician-Demanded Tests: Descriptions and Error Codes

Always investigate tests in the order presented in the table below when inspecting errors in the system. By clearing error codes associated with the *Data Module Internal Loop Around Test,* for example, you may also clear errors generated from other tests in the testing sequence.

For example, you may also clear errors generated from other tests in the testing sequence.

Order of Investigation	Short Test Sequence	Long Test Sequence	D/ ND[1]
Data Module Internal Loop Around Test (#175)		X	ND
Network Processing Element Crosstalk Test (#9)		X	ND
Information and Control Channel Loop Around Test (#13)		X	ND
Data Module Audits Test (#17)	X	X	ND

1 D = Destructive; ND = Nondestructive

NPE Crosstalk Test (#9)

One or more NPEs reside on each circuit pack with a TDM Bus interface. The NPE controls port connectivity and gain, and provides conferencing functions on a per-port basis. The NPE Crosstalk Test verifies that this port's NPE channel talks on the selected time slot and never crosses over to time slots reserved for other connections. If the NPE is not working correctly, one-way and noisy connections may be observed. If a secondary data module is assigned, it is tested after the primary data module. If either test fails, both data modules are taken out of service This test usually runs only during the Long Test Sequence and takes about 20 to 30 seconds to complete.

Table 10-445. TEST #9 NPE Crosstalk Test

Error Code	Test Result	Description/Recommendation
1	ABORT	During testing of the primary information channel, system resources may not have been available. 1. Check the port status. Use the **display port PCSSpp** command to determine the station extension of the port. Use the **station status** command to determine the service state of the port. If the service state indicates that the port is in use, then the port is unavailable for this test. You must wait until the port is idle. 2. If the port status is idle, then retry the command at one-minute intervals a maximum of 5 times.
1000	ABORT	System resources required to run this test are not available. The port may be busy with a valid call. Use the **display port PCSSpp** command to determine the extension of the data module port. Use the **status data-module** command to determine the service state of the port. If the service state indicates that the port is in use, then the port is unavailable for certain tests. (Refer to the "Status Commands" section in Chapter 8, ''Maintenance Commands and Trouble-Clearing Aids'' for a full description of all possible states). You must wait until the port is idle before retesting. 1. If the port status is idle, retry the command at one-minute intervals a maximum of 5 times.
1001	ABORT	System resources to run this test are not available. 1. Retry the command at one-minute intervals a maximum of 5 times.

Continued on next page

Table 10-445. TEST #9 NPE Crosstalk Test — *Continued*

Error Code	Test Result	Description/Recommendation
1002	ABORT	The system could not allocate time slots for the test. The system may be under heavy traffic conditions or it may have time slots out-of-service due to TDM-BUS errors. Refer to TDM-BUS (TDM Bus) Maintenance documentation to diagnose any active TDM-BUS errors. 1. If the system has no TDM-BUS errors and is not handling heavy traffic, repeat the test at one-minute intervals a maximum of 5 times.
1003	ABORT	The system could not allocate a tone receiver for the test. The system may be oversized for the number of Tone Detectors present or some Tone Detectors may be out-of-service. 1. Look for TTR-LEV errors in the Error Log. If present, refer to TTR-LEV (TTR Level) Maintenance documentation. 2. Look for TONE-PT errors in the Error Log. If present, refer to TONE-PT (Tone Generator) Maintenance documentation. 3. If neither condition exists, retry the test at one-minute intervals a maximum of 5 times.
1004	ABORT	The port may be busy with a valid call. Use the **display port PCSSpp** command to determine the extension of the data module port. Use the **status data-module** command to determine the service state of the port. If the service state indicates that the port is in use, then the port is unavailable for certain tests. (Refer to the "Status Commands" section in Chapter 8, ''Maintenance Commands and Trouble-Clearing Aids'' for a full description of all possible states). You must wait until the port is idle before retesting. 1. Retry the command at one-minute intervals a maximum of 5 times. 2. If the test continues to abort and the port is not in use, escalate the problem.
1020	ABORT	Test disabled via background testing. Use **status data-module** command to determine when the data module is available for testing.
2000	ABORT	Response to the test request was not received within the allowable time period. 1. Retry the command at one-minute intervals a maximum of 5 times.

Continued on next page

Table 10-445. TEST #9 NPE Crosstalk Test — *Continued*

Error Code	Test Result	Description/Recommendation
2020	ABORT	The test did not run due to a previously existing error on the specific port or a more general circuit pack error. 1. Examine Error Log for existing errors against this port or the circuit pack and attempt to diagnose the previously existing error.
2100	ABORT	Could not allocate the necessary system resources to run this test. 1. Retry the command at one-minute intervals a maximum of 5 times.
2500	ABORT	Internal System Error. 1. Retry the command at 1-minute intervals a maximum of 5 times.
1,2	FAIL	The NPE of the tested port was found to be transmitting in Error Log. This causes noisy and unreliable connections. Failure Code 1 indicates that the Crosstalk Test failed on the primary channel. Failure Code 2 indicates that the Crosstalk Test failed on the secondary channel. 1. Replace the circuit pack.
	PASS	The port is correctly using its allocated time slots. 1. To be sure that this is not an intermittent problem, repeat this test up to a maximum of 10 times and verify that it continues to pass. 2. If complaints still exist, examine the data module, connections, and wiring.

Information and Control Channel Local Loop Test (#13)

This is a set of four tests that check the operation of the information and control channels used between the SPE and the Digital Line port circuit.

NOTE:
This is an Internal Loop Around test only and does not check building wiring. Use Test #175 for external loop around tests to the data module.

1. The SPE first sends a message to the on-board microprocessor to loop around both the information and control channels for the port. Then, the primary information channel loop back test is run. The test is performed by sending a digital count from the Tone-Clock circuit pack on the primary channel time slot and receiving the same digital count with a GPTD. The digital count looks like transparent data to the on-board microprocessor.
2. With the port still in loop around mode, the S channel Loop Around Test is performed next. This test consists of sending four different transparent patterns to the on-board microprocessor, receiving them back, and comparing them.
3. The third test is a Loop Around Test for the secondary (alternate) channel. It is not performed for data modules since this channel is not used by MPDMs, MTDMs, and stand-alone DA's [G3iV2-386].
4. A Conference Test is done next for the primary channel. This test is the same as the Analog Line Terminal/Port Conference Test (#6).

Only one value (Pass, Fail, or Abort) is generated as a result of four tests run. If any test fails or aborts, the sequence is stopped.

Table 10-446. TEST #13 Information and Control Channel Local Loop Test

Error Code	Test Result	Description/Recommendation
	ABORT	Internal System Error. 1. Retry the command at one-minute intervals a maximum of 5 times.
1000	ABORT	System resources required to run test are not available. Port may be busy with a valid call. Use **display port PCSSpp** command to determine the data module extension. Then use **status data module** command with the extension number to determine the service state of the data module. If the service state indicates that the data module is in use, then port is unavailable for certain tests. Wait until port is idle before retesting. 1. If the port status is idle, retry the command at one-minute intervals a maximum of 5 times.
1001	ABORT	System resources required to run this test are not available. 1. Retry the command at one-minute intervals a maximum of 5 times.

Continued on next page

Table 10-446. TEST #13 Information and Control Channel Local Loop Test — *Continued*

Error Code	Test Result	Description/Recommendation
1002	ABORT	The system could not allocate time slots for the test. The system may be under heavy traffic conditions or it may have time slots out-of-service due to TDM-BUS errors. Refer to TDM-BUS (TDM Bus) Maintenance documentation to diagnose any active TDM-BUS errors. 1. If the system has no TDM-BUS errors and is not handling heavy traffic, repeat the test at one-minute intervals a maximum of 5 times.
1003	ABORT	The system could not allocate a tone receiver for the test. The system may be oversized for the number of Tone Detectors present or some Tone Detectors may be out-of-service. 1. Look for TTR-LEV errors in the Error Log. If present, refer to TTR-LEV (TTR Level) Maintenance documentation. 2. Look for TONE-PT errors in the Error Log. If present, refer to TONE-PT (Tone Generator) Maintenance documentation. 3. If neither condition exists, retry the command at one-minute intervals for a maximum of 5 times.
1004	ABORT	The port was seized by a valid call during the test. The test has been aborted. Use the **display port PCSSpp** command to determine the data module extension. Then use **status data module** command with the extension number to determine the service state of the data module. If the service state indicates that the data module is in use, then the port is unavailable for certain tests. You must wait until the port is idle before retesting.
2000	ABORT	Response to the test request was not received within the allowable time period. 1. Retry the command at one-minute intervals a maximum of 5 times.
2001	ABORT	System resources required to run this test are not available. 1. Retry the test at one-minute intervals a maximum of 5 times.
2100	ABORT	Could not allocate the necessary system resources to run this test. 1. Rerun the test at one-minute intervals a maximum of 5 times.

Continued on next page

Table 10-446. TEST #13 Information and Control Channel Local Loop Test — *Continued*

Error Code	Test Result	Description/Recommendation
2500	ABORT	Internal System Error 1. Retry the command at 1-minute intervals a maximum of 5 times.
15	FAIL	The control channel between the processor and Digital Line circuit pack is not transmitting properly. This can cause a wide range of effects. The user may notice nothing or the port may be totally unusable. This could also disrupt other users. 1. Run circuit pack tests to check the Tone Generator and the Tone Detector circuit packs using the **test board UUCSS short** command. 2. Resolve any problems that are detected on the Tone Generator circuit pack or Tone Detector circuit pack. 3. If the Tone Generator and Tone Detector circuit packs are functioning properly, and the test still fails, replace the Digital Line circuit pack.

Continued on next page

Table 10-446. TEST #13 Information and Control Channel Local Loop Test — *Continued*

Error Code	Test Result	Description/Recommendation
7	FAIL	Conference test failed on the primary information channel. In some cases, user may not notice disruption in service. In extreme cases, conferencing feature may not work at all.
14	FAIL	The primary information channel is not transmitting properly. User impact may range from noticing nothing to not being able to use this port.
15	FAIL	The control channel between the processor and Digital Line circuit pack is not transmitting properly. This can cause a wide range of effects. The user may notice nothing or the port may be totally unusable. This could also disrupt other users. 1. Run circuit pack tests to check the Tone Generator and the Tone Detector circuit packs using the **test board UUCSS short** command. 2. Resolve any problems that are detected on the Tone Generator circuit pack or Tone Detector circuit pack. 3. If the Tone Generator and Tone Detector circuit packs are functioning properly, and the test still fails, replace the Digital Line circuit pack.
16	FAIL	The secondary information is not transmitting properly. This can cause a wide range of effects. The user may notice nothing or the port may be totally unusable. 1. To be sure that this is not an intermittent problem, repeat this test up to a maximum of 10 times to make sure it continues to pass. 2. If complaints still exist (poor data transmission), examine the data module, connections, and wiring.
	PASS	Information and Control Channel Local Loop Test passed. All channels are transmitting properly.

Data Module Audits Test (#17)

This is a series of six tests that are classified as hardware audits. The processor sends messages to the on-board microprocessor to perform the following tests. [G1] The audits run only if the station is in-service.

- Switchhook Inquiry — This is an update of the processor's software records based on the on-hook/off-hook status of the data module.
- Bad Scan Inquiry — A message is sent uplink that contains a count generated by certain events relating to the digital loop's (link) conditions. This could be an indication of communication problems between the processor and digital port circuit pack.
- EPF inquiry — The status of the EPF is sent uplink. EPF is not used for data modules.
- ID Request — A request is made to the data module for its status. The data module sends its configuration information and health information back. This information is checked and a pass/fail result is provided.
- Ringer Update — This updates the data module's ringer state according to processor records.
- Translation Update — This is a message normally used with digital stations to refresh the default value that causes the station to send touch-tones only in the primary information channel. This test is not used with data modules.

Table 10-447. TEST #17 Data Module Audits Test

Error Code	Test Result	Description/Recommendation
1	ABORT	Switchhook audit timed out. 1. Verify the data module is connected to the PBX and repeat the test. 2. If the test aborts, replace the data module and repeat the test. 3. If the test continues to abort, replace the circuit pack and repeat the test.
2	ABORT	ID request fails, health bit is defective, or no response from on-board microprocessor. 1. Verify that the correct data module type (PDM versus TDM) is administered. 2. If the test aborts, replace the data module and repeat the test. 3. If the test aborts, replace the circuit pack and repeat the test.

Continued on next page

Table 10-447. TEST #17 Data Module Audits Test — *Continued*

Error Code	Test Result	Description/Recommendation
3	ABORT	No response from EPF audit.
4	ABORT	Internal System Error. 1. Resolve any outstanding circuit pack maintenance problems. 2. Retry the command at one-minute intervals a maximum of 5 times.
5	ABORT	Ringer update aborted (data module not in the in-service state). 1. Verify that the data module is powered (power LED on). 2. Make sure data module is connected to the building wiring, check for faulty wiring, check for faulty data module. 3. Retry the command at one-minute intervals a maximum of 5 times. 4. Replace the Data Module and repeat the test. 5. If the test continues to abort, replace the Digital Line circuit pack and repeat the test.
6	ABORT	Data module translation update aborted. 1. Verify the data module is connected to the PBX. 2. Retry the command at one-minute intervals a maximum of 5 times.
1000	ABORT	System resources required to run this test are not available.
2000	ABORT	Response to the test request was not received within the allowable time period.
	FAIL	Internal System Error. 1. Retry the command at one-minute intervals a maximum of 5 times.
	PASS	Data Module Audits passed. This digital port circuit pack is functioning properly. 1. If complaints still exist, investigate by using other port tests, and by examining the data module options, wiring, and connections.

Data Module Internal Loop Around Test (#175)

This test verifies that a data message can be sent from the PBX, through the building wiring, through an internal looparound path in the data module under test, and back to the PBX. Figure 10-79 shows the hardware configuration used for this test.

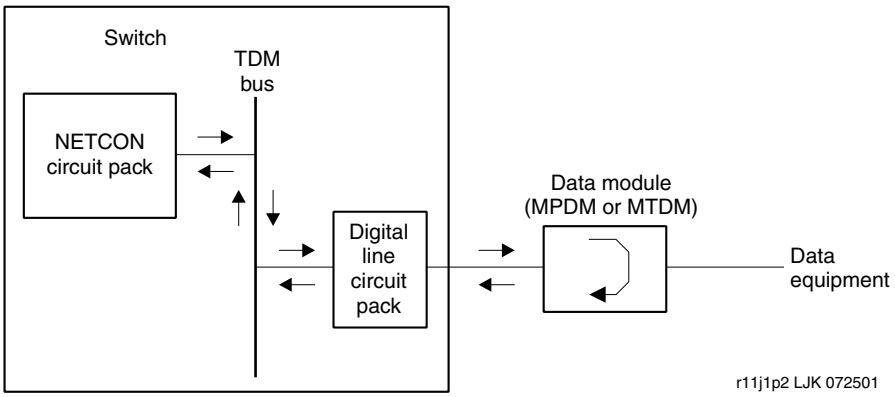

Figure 10-79. Internal Loop Around Test

A signaling message is sent through the digital port circuit pack to the data module under test to request it to enter loop around mode. A test pattern is then sent from the SPE through the Network Control circuit pack (Netcon), over the TDM Bus, through the digital port circuit pack, to the data module where the message is looped around, and sent back through the digital port circuit pack, the TDM Bus, the Network Control circuit pack, and to the SPE where it is checked for consistency.

This test aborts if no terminal or communications equipment is connected to the data module. It also aborts if a number of local PBX resources are not available. These resources include a network control channel from the Network Control circuit pack (there are a maximum of four channels administered as Netcon-type data modules), two TDM time slots (one for each direction of the loop around message), and an idle digital port circuit associated with the data module under test. Failure to allocate any of these resources causes the test to abort with a specific error code for that resource.

A “yes/no” parameter on each data module (MPDM, MTDM, or stand-alone DA only) administration form is required to specify if the Data Module remote Loop Around Test is supported by the data module endpoint. If the parameter is “n” (no), the test does not run.

Table 10-448. TEST #175 Data Module Internal Loop Around Test

Error Code	Test Result	Description/Recommendation
1000	ABORT	Could not get translation information for port. 1. Verify that port circuit is administered. 2. Wait one minute and attempt the test again. 3. If the test continues to abort and the port is not in use, escalate the problem.
1005	ABORT	This test is not applicable to the given hardware configuration. 1. This abort message can be ignored.
1020	ABORT	Internal Software Error. 1. Retry the command at one-minute intervals a maximum of 5 times.
1030	ABORT	Internal software group identifier for data module not valid. 1. Verify that port circuit is administered correctly. 2. If administration data correct, escalate the problem.
1031	ABORT	Extension number not valid.
1032	ABORT	Extension number not correct length. 1. Verify that the data module extension is administered correctly. 2. If the administration data is correct, escalate the problem.
1071	ABORT	No auxiliary port on Netcon circuit pack available to test with. 1. Check that the Netcon data channels are administered (the **list data-modules** command should show at least one Netcon-type data module). 2. Test the Network Control (Netcon) circuit pack using the **test data-module** command for the Netcon circuit pack. 3. If administration data is correct, escalate the problem.
2000	ABORT	Data module disconnected. 1. Verify that the data module is powered (power LED on). 2. Make sure data module is connected to the building wiring. Check for faulty wiring and faulty data module. 3. Retry the command at one-minute intervals a maximum of 5 times. 4. Replace the Data Module and repeat the test. 5. If the test continues to abort, replace the Digital Line circuit pack and repeat the test.

Continued on next page

Table 10-448. TEST #175 Data Module Internal Loop Around Test — *Continued*

Error Code	Test Result	Description/Recommendation
2500	ABORT	Internal System Error. 1. Retry the command at 1-minute intervals a maximum of 5 times.
3004	ABORT	1. This error could be caused by the switch setting of the PDM. Verify that the switch on the PDM is set to the “remote loop” position. When the remote loop around test is completed, return the switch to the “off” position. 2. This error could be caused by the Network Control Data Channel. Look for DATA-CHL errors in the Hardware Error Log. 3. This error could also result if no data equipment is connected to the data module. Verify that (a) the data equipment is properly connected to the data module, (b) that power is available to the data equipment, and that (c) the data equipment is powered on. 4. This error could also occur if the baud rate of the data module is set to 19.2 Kbps since the Network Control circuit pack used by this test does not support baud rates greater than 9600 bps. Verify that the baud rate of the data module is set to 9600 bps or less.
1040	FAIL	Data received from remote loop back does not match data sent. 1. Check for faulty wiring. 2. Replace the data module and repeat the test. 3. If the test fails, replace the Digital Line circuit pack associated with the data module and repeat the test.
1070	FAIL	Internal software response. 1. Wait one minute and attempt the test again. 2. If the same error persists after five attempts in one-minute intervals, escalate the problem.
1072	FAIL	Poor response from auxiliary channel. 1. Test the Network Control (Netcon) circuit pack using the **test data-module** command. 2. If the test fails, replace the Digital Line circuit pack.
1073	FAIL	Internal System Error. 1. Wait one minute and attempt the test again. 2. If the same error persists after five attempts in one-minute intervals, escalate the problem.

Continued on next page

Table 10-448. TEST #175 Data Module Internal Loop Around Test — *Continued*

Error Code	Test Result	Description/Recommendation
1074	FAIL	Internal System Error. 1. Make sure that the data equipment connected to the data module is powered. 2. For an (M)PDM, verify that the Data Terminal “Ready” LED is ON, or for an (M)TDM, verify that the Data Set Ready LED is ON. If it is not on, check the cable from the data equipment to the data module.
1075	FAIL	Unknown message received during test. 1. Attempt the test again. 2. If the same error occurs, test the Network Control Data Channel using the **test data-module** command and a known working data module. 3. Replace the Digital Line circuit pack and repeat the test. 4. If the test continues to fail, escalate the problem.
2040	FAIL	Internal System Error.
2095	FAIL	Internal System Error. 1. Repeat the test.
	PASS	Data Module Loop Around Test passed. This digital port circuit pack is functioning properly. 1. If problems persist, investigate by using other port tests and by examining the data module options, wiring, and connections.

PE-BCHL (PRI Endpoint Port)

MO Name (in Alarm Log)	Alarm Level	Initial Command to Run	Full Name of MO
PE-BCHL[1]	MINOR	test port PCSSpp l	PRI Endpoint Port
PE-BCHL	WARNING	test port PCSSpp sh	PRI Endpoint Port

1 For additional repair information, see also UDS1-BD (UDS1 Interface Circuit Pack) maintenance documentation and "Troubleshooting PRI Endpoint Problems" in Chapter 5.

A PRI Endpoint provides ISDN-PRI (Primary Rate Interface) connections for customers with application equipment or terminal adapters that terminate ISDN-PRI. The equipment or terminal adapters are connected to the switch via the UDS1 interface circuit pack. PRI Endpoint Port (PE-BCHL) maintenance provides a strategy to maintain PRI Endpoint Port hardware circuitry on the UDS1 circuit pack. The maintenance strategy involves logging PRI Endpoint Port hardware errors, running tests for port initialization, periodic and scheduled maintenance, system technician-demanded tests, and alarm escalation and resolution.

Wideband Switching

The Wideband Switching capability supports end-to-end connectivity between customer endpoints at data rates from 128 to 1536 kbps over T1 facilities and to 1984 kbps over E1 facilities. DEFINITY switching capabilities are extended to support wideband calls comprised of multiple DS0s that are switched end-to-end as a single entity.

The Wideband Switching capability is designed for ISDN application equipment (for example, ISDN video codecs), but it retains provisions for non-ISDN application equipment by using PRI terminal adapters. In the same sense that a DEFINITY data module acts as a DCP or BRI terminal adapter between endpoint data (for example, V.35) and dialing (for example, RS-366) interfaces and a DCP interface, a PRI terminal adapter acts as a wideband terminal adapter between endpoint data and dialing interfaces and DEFINITY's line-side ISDN PRI interface.

The Wideband Switching Capability introduces PRI Endpoints on DEFINITY line-side interfaces. A PRI Endpoint consists of one or more contiguous B-channels on a line-side T1 or E1 ISDN PRI facility, and it has an extension number. Endpoints initiate and receive calls using ISDN SETUP messages that indicate the data rate and specific B-channels to be used, and they communicate all other call status information via standard ISDN messages. Any DEFINITY ISDN signaling set (for example, AT&T, CCITT, ECMA) may be used for a line-side ISDNPRI facility.

Multiple PRI Endpoints on a one line-side facility are separate and distinct within the facility. Non-overlapping contiguous sets of B-channels are associated with each PRI Endpoint, and the endpoint equipment is expected to initiate calls within these boundaries.

The endpoint application equipment must be able to do the following: use standard ISDN-PRI signaling, adhere to the PRI Endpoint boundaries as administered on DEFINITY when initiating calls, and handle incoming calls appropriately based on the PRI Endpoint.

Signaling and B-channel States

These ports use a separate channel for signaling (for example, for call setup). This mode of operation is known as out-of-band signaling. The separate signaling channel is called a D-channel in ISDN terminology, and it carries all the call control signaling messages for the PRI Endpoint Port B-channels. The D-channel for these B-channels is an ISDN-PRI Signaling Link Port (ISDN-LNK). The signaling protocol used on the ISDN-PRI Signaling Link Port D-channel is defined by one of the four selectable ISDN-PRI Specifications: AT&T, CCITT, ECMA, and ANSI.

The ISDN-PRI Specification defines the possible SERVICE STATES for a B-channel. The service state is negotiated with the far-end terminal adapter, and it changes over time. Also, the service state may have a far-end or near-end component, and it is initialized to the Out-Of-Service/Far-End state. An attempt is made to negotiate the service state to In-Service.

NOTE:
The service state of a particular PRI Endpoint Port B-channel can be displayed by issuing the **status pri-endpoint <extension>** system technician command.

If a call is present, the ISDN-PRI Specification defines the permissible CALL STATES as well. There are tests in the short and long test sequences for PRI Endpoint Port that are designed to audit these states and to ensure agreement between both ends of the PRI wideband connection.

Alarming based on Service States:

A PRI Endpoint Port B-channel is alarmed with a WARNING if it is placed into a Maintenance/Far-End or Out-Of-Service/Far-End state. While in such a state, the port is unusable for calls to the terminal adapter. However, the user can still use the other remaining ports in the PRI Endpoint to make calls to and from the terminal adapter. When a WARNING alarm is raised, the **status pri-endpoint <extension>** command should be used to determine the exact state of the port. Other alarms can be diagnosed by using the short and/or long test sequences. Note that a PRI Endpoint Port B-channel can be placed into a Far-End Service State either by direct action of the far-end terminal adapter or by inaction of the

far-end terminal adapter. For example, if they do not respond to a Remote Layer 3 Query (see Test #260 for ISDN-PRI Signaling Link Port), the associated PRI Endpoint Port B-channels are placed into the Maintenance/Far-End service state.

A PRI Endpoint Port is a port on a UDS1 interface circuit pack. Therefore, this port depends on the health of the UDS1 interface circuit pack for proper operation (see Figure 10-80). As noted earlier, a PRI Endpoint Port B-channel also depends on an ISDN-PRI Signaling Link Port D-channel (ISDN-LNK) to carry the signaling traffic. If there is a problem with the ISDN-PRI Signaling Link Port, the PRI Endpoint Port is affected. The ISDN-PRI Signaling Link Port, in turn, depends on the PI-LINK (Processor Interface Link). Processor Interface Link problems affect the ISDN-PRI Signaling Link Port. Keep this hierarchy of dependencies in mind when diagnosing problems.

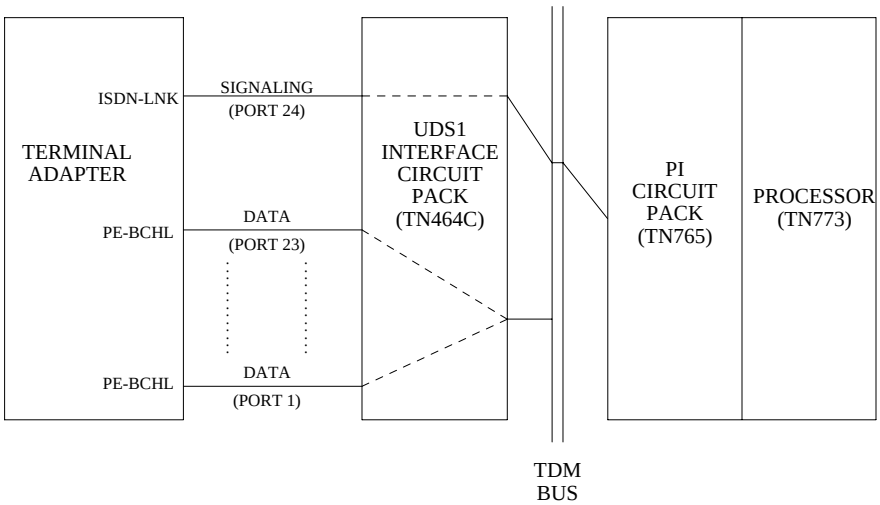

Figure 10-80. PRI Endpoint Port Interactions [INTEL]

PRI Endpoint Port Service States

This section defines the possible service states of a PRI Endpoint Port, and it explains the reason for each service state. This section also provides the recommended recovery procedures (when required).

Service States

- In-Service (INS)

  The B-channel is in its normal operating state.

- Out-of-Service/Far-end (OOS/FE)

  A B-channel is initialized to this state when administered. The switch sends messages to the far-end terminal adapter to negotiate the B-channel into service. If the far-end terminal adapter does not respond to the messages within a certain time period, the service state remains out-of-service, and maintenance periodically resends the messages. The port is unusable for calls incoming to the switch and outgoing to the terminal adapter (although other ports in the PRI Endpoint can still be used for incoming and outgoing calls).

- Out-of-Service/Near-end (OOS/NE)

  This is the state of the port whenever one of the following is true: a hardware failure exists on the signaling link, the NPE Crosstalk Test fails, or the port is busied out by system technician. In this state, the port is unusable for calls incoming to the switch or outgoing to the terminal adapter (although other ports in the PRI Endpoint can still be used for incoming and outgoing calls). No messages are sent to the far-end terminal adapter until the signaling link comes back into service or until the port is released by system technician.

- Maintenance/Far-end (MTC/FE)

  This state is reached when the far-end terminal adapter does not respond to messages sent over the signaling link for a particular port after a certain amount of time. This state is different from OOS/FE inasmuch as the signaling link must be up initially and the B-channels must be in-service. The switch periodically sends messages to the far-end terminal adapter in an attempt to negotiate the port (B-channel) into service. The port is unusable for calls outgoing to the terminal adapter. However, the port services incoming call requests from the far-end (although other ports of the PRI Endpoint can still be used to answer calls incoming to the switch or to place outgoing calls to the terminal adapter). Note that transitions into MTC/FE do not drop stable calls. Therefore, if the service state changes from in-service to MTC/FE, stable calls are unaffected.

- Maintenance/Near-end (MTC/NE)

  The port (B-channel) is in this state if the signaling link (PI-LINK) is busied out by system technician. The port (B-channel) is also temporarily in this state if the system technician has issued a **test port PCSSpp l** or a **test pri-endpoint <extension> l** command. Note that transitions into MTC/NE do not drop stable calls. Therefore, a system technician-demanded **busyout link lnk-no** command does not drop stable wideband calls. In this state, the B-channel is not usable either for new calls incoming to the switch or for new calls outgoing to the terminal adapter.

- Pending States (PEND)

  If the near-end is expecting a timed response from the far-end for a request to change the service state of a port, the state of the port reflects a Pending state. For example, if the port is out-of-service/far-end and if an in-service message is sent to the far-end, the service state of the port is OOS/FE-PEND/INS (that is, out-of-service/far-end-Pending/in-service). The far-end has a certain amount of time to respond to the message. The service state reflects this pending state until the timer expires.

The following diagram of the PRI Endpoint Port service states shows the common progression from one service state to another and the event that caused the change of state.

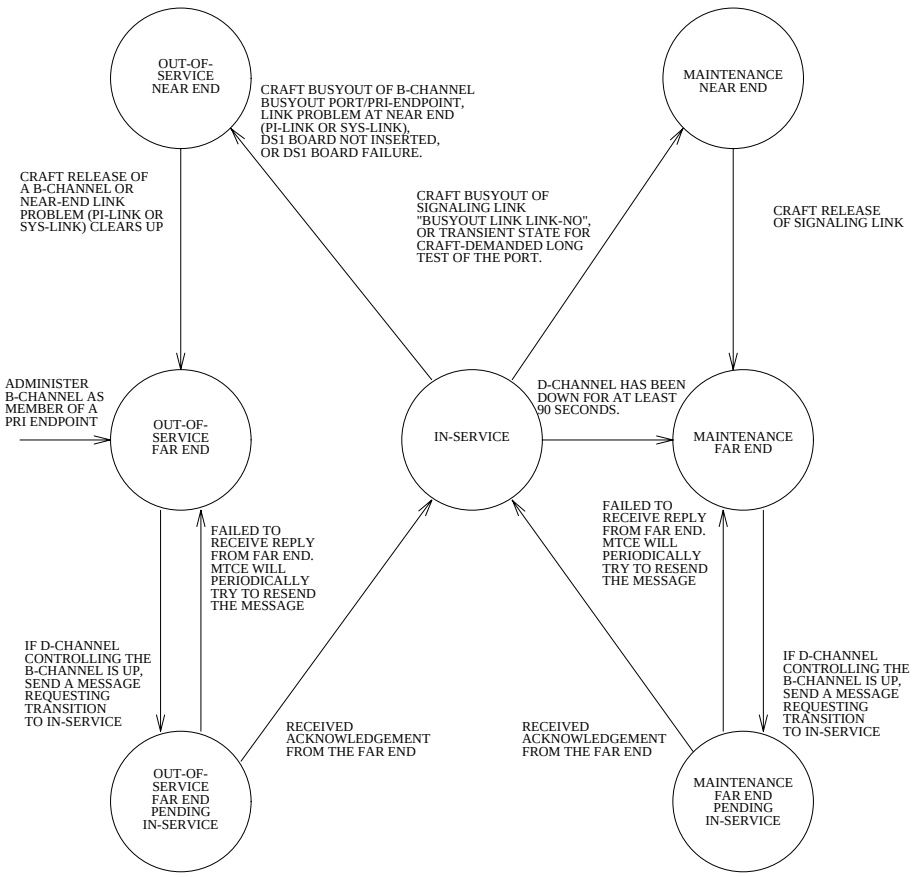

Figure 10-81. Common Progressions in Service States

PRI Endpoint Port Service States

The following table summarizes each of the different PRI Endpoint Port service states that can result when the **status pri-endpoint <extension>** command is issued. From the results of the status command, match the service state to the corresponding column. Proceed down the column until an “X” is found. The left column indicates possible reasons why the port is in this state, and the right column suggests possible recovery mechanisms. If an alarm against PE-BCHL is present, it is indicated below the “X.”

NOTE:
Refer to “Troubleshooting PRI Endpoint Problems” in Chapter 5, ‘‘Routine Maintenance Procedures’’ for a layered approach to the processing of PRI Endpoint problems.

Table 10-449. PRI Endpoint Port Service States

Possible Problem Source	O/S-NE	O/S-FE	O/S- FE Pend- ins	maint-NE	maint- FE	maint-FE Pend- ins	INS	Possible Recovery Route
ISDN wideband calls being completed.							X	Normal Operation.
Port busied out by system technician?	X Warn Alarm							Release port by the **release pri-endpoint extension** or **release port PCSSpp**.
NPE Crosstalk Test failed?	X Minor Alarm							Replace UDS1 Interface CP.
DS1 circuit pack lost signal?	X							UDS1 Interface CP removed? DS1 cable disconnected? Terminal adapter problems? Far-end terminal adapter restarting? Faulty UDS1 Interface CP?

Continued on next page

Table 10-449. PRI Endpoint Port Service States — *Continued*

Possible Problem Source	O/S-NE	O/S-FE	O/S- FE Pend- ins	maint-NE	maint- FE	maint-FE Pend- ins	INS	Possible Recovery Route
Check UDS1-BD.								Refer to UDS1-BD for repair procedures.
Far-end problems?		X Warn Alarm						Check administration and the status of the corresponding port on the far-end terminal adapter.
Service Message sent, waiting for reply from far-end terminal adapter (2 minutes).			X			X		Wait a couple minutes until Pending State not present, check service state.
Processor Interface Link busied out by system technician? Check link status. [MIPS only].				X				Release link by the **release link lnk-no.**

Continued on next page

Table 10-449. PRI Endpoint Port Service States — *Continued*

Possible Problem Source	O/S-NE	O/S-FE	O/S- FE Pend- ins	maint-NE	maint- FE	maint-FE Pend- ins	INS	Possible Recovery Route
Signaling link has been down for over 90 seconds?					X Warn Alarm			See ISDN-SGRP, ISDN-LNK, PI-LINK and/or SYS-LINK and follow repair procedures. Is far-end terminal adapter currently restarting?
Repeated failure of far-end to respond to messaging?					X Warn Alarm			Periodically Maintenance will try to resend messages. To speed process, run system technician-demanded test **test port PCSSpp** (Test #256).
Far-end port busied out (OOS/FE). Far-end port being tested (MTCE/FE).		X Warn Alarm			X Warn Alarm			Check status of far-end terminal adapter.

Error Log Entries and Test to Clear Values

Table 10-450. PRI Endpoint Port Error Log Entries

Error Type	Aux Data	Associated Test	Alarm Level	On/Off Board	Test to Clear Value
0[1]	0	Any	Any	Any	test port PCSSpp sh r 1
1 (a)	Any	None			test port PCSSpp sh r 1
15 (b)	Any	Audit and Update Test (#36)			
18 (c)	0	busyout pri-endpoint <extension> busyout port <PCSSpp>	WARNING	OFF	release pri-endpoint <extension> release port <PCSSpp>
129 (d)		None	WARNING	OFF	test port PCSSpp sh r 1
130 (e)		None	WARNING	ON	test port PCSSpp sh
257 (f)	Any	None			test port PCSSpp sh r 1
513 (g)	Any	None	WARNING	OFF	test port PCSSpp sh r 1
76 9 (f)	Any	None			test port PCSSpp sh r 1
1281 (h)	Any	Conference Circuit Test (#7)	MINOR	ON	test port PCSSpp l r 4
1537 (i)	Any	NPE Crosstalk Test (#6)	MINOR	ON	test port PCSSpp l r 3
1793 (j)	Any	None			test port PCSSpp sh r 1
3073 (k)	Any	Service State Audit (#256)			test port PCSSpp sh r 2
3585 (l)	Any	None			None

1 Run the Short Test Sequence first. If all tests pass, run the Long Test Sequence. Refer to the appropriate test description and follow the recommended procedures.

Notes:

a. This error type indicates a disagreement between the switch and the terminal adapter at the other end of the connection with regard to the ISDN *call* state of the PRI Endpoint Port. This switch automatically tries to recover by clearing the call (that is, the call is torn down). The **status pri-endpoint <extension>** command can be used to determine the state of the port.

   When running the Short Test Sequence of tests, pay close attention to the results of the Call State Audit Test (#257).

b. This is a software audit error that does not indicate any hardware malfunction. Run the Short Test Sequence and investigate the associated errors (if any).

c. The PRI Endpoint Port has been busied out by a **busyout pri-endpoint <extension>** command or by a **busyout port <PCSSpp>** command. No wideband calls can be made to this port (although wideband calls can still be made to other ports within this PRI Endpoint if others ports are in service).

d. The far-end terminal adapter changed its ISDN *service* state to either “out-of-service” or “maintenance.” This may be a temporary condition due to the testing of this port by the far-end terminal adapter *or* by a hardware problem with the port. Outgoing calls to the terminal adapter are not allowed over the port (although calls can still be made to other ports that are in service within the same PRI Endpoint). To investigate the status of the port, issue the **status pri-endpoint <extension>** command.

e. This error type indicates that the circuit pack has been removed or has been insane for more than 11 minutes. To clear the error, reinsert or replace the circuit pack.

f. This error type indicates a disagreement between this switch and the terminal adapter at the other end of the connection with regard to the ISDN service state of the PRI Endpoint Port. This switch tries to recover by performing a service state audit. The **status pri-endpoint <extension>** command can be used to determine the state of the port.

   When running the Short Test Sequence, pay close attention to the results of the Service State Audit Test (#256).

g. This port is not recognized by the far-end terminal adapter. Investigate the PRI Endpoint administration for both the switch and the terminal adapter and make changes as necessary.

h. The Conference Circuit Test (#7) failed on this port. See Test #7 for the repair procedures.

i. The NPE Crosstalk Test (#6) failed on this port. See Test #6 for the repair procedures.

j. This error indicates a failure of the UDS1 Interface circuit pack. When running the Short Test Sequence, the results of the Signaling Link State Check Test (#255) are important.

k. Two Service State Audit attempts have failed (see Test #256). The port is not usable for any outgoing calls to the terminal adapter (although incoming calls from the terminal adapter are accepted over this port, other ports in the PRI Endpoint can still be used for both incoming and outgoing calls to and from the terminal adapter) until the test passes and the port state is changed to in-service (use the **status pri-endpoint <extension>** command to investigate the port status).

l. This error type appears when the switch receives an ISDN RESTART message for an ISDN port that is not idle. Usually, calls are not cleared via the RESTART message. Therefore, this error type may be associated with a dropped call report from a user.

The following Aux Data values for Error Type 3585 represent the port's ISDN call state at the time that the unexpected request to restart the channel is received from the remote terminal adapter. This information can be useful if dropped calls (cutoffs) are being reported by users of the PRI Endpoint.

The following list contains important Aux values. Any other such values can be ignored.

10	A call in a stable, talking state was cleared unexpectedly by the far-end terminal adapter with an ISDN RESTART message. This state is called the "active" state.
4, 7, 8, 260, 263	A call that did not reach the active state but at least reached a ringing state was cleared unexpectedly by the far-end terminal adapter with an ISDN RESTART message.
1, 3, 6, 9, 265	A call that has not yet reached a ringing state was cleared unexpectedly by the far-end terminal adapter with an ISDN RESTART message.
11, 12, 19, 531, 267,268	A call that was in the process of clearing has been nonetheless cleared by the far-end terminal adapter with an ISDN RESTART message. If this condition occurs frequently, it may mean that the far-end terminal adapter is attempting to clear ports that it thinks are in a "hung" state. The RESTART message brings the port to an idle condition.

System Technician-Demanded Tests: Descriptions and Error Codes

Always investigate tests in the order presented in the table below when inspecting errors in the system. By clearing error codes associated with the *NPE Crosstalk Test*, for example, you may also clear errors generated from other tests in the testing sequence.

Table 10-451. System Technician-Demanded Tests: DS1-BD

Order of Investigation	Short Test Sequence	Long Test Sequence	D/ND[1]
NPE Crosstalk Test (#6)		X	ND
Conference Circuit Test (#7)		X	ND
Audit and Update Test (#36)	X	X	ND
Signaling Link State Check Test (#255)	X	X	ND
Service State Audit Test (#256)	X	X	ND
Call State Audit Test (#257)	X	X	ND

1 D = Destructive, ND = Non-destructive

NPE Crosstalk Test (#6)

The NPE Crosstalk Test verifies that this port's NPE channel talks on the selected time slot and that it never crosses over to time slots that are reserved for other connections. If the NPE is not working correctly, one-way and noisy connections may be observed. This test is usually only part of a port's long test sequence, and takes about 20 to 30 seconds to complete.

Table 10-452. TEST #6 NPE Crosstalk Test

Error Code	Test Result	Description/Recommendation
	ABORT	Could not allocate the necessary system resources to run this test. 1. Retry the command at 1-minute intervals a maximum of 5 times.
1000	ABORT	System resources required to run this test are not available. The port may be in use on a valid call. Use **status pri-endpoint <extension>** commands to determine when the port is available for testing. 1. Retry the command at 1-minute intervals a maximum of 5 times.
1001	ABORT	Could not allocate the necessary system resources to run this test. 1. Retry the command at 1-minute intervals a maximum of 5 times.
1002	ABORT	The system could not allocate time slots for the test. The system may be under heavy traffic conditions or it may have time slots out-of-service due to TDM Bus errors. The **status health** command can be used to determine if the system is experiencing heavy traffic. Refer to TDM Bus Maintenance to diagnose any active TDM Bus errors. 1. If system has no TDM Bus errors, and if it is not handling heavy traffic, repeat the test at 1-minute intervals a maximum of 5 times.
1003	ABORT	The system could not allocate a tone receiver for the test. The system may be oversized for the number of tone detectors present, or some tone detectors may be out-of-service. The **list measurements tone-receiver** command displays information on the system's tone receiver. 1. Look for TTR-LEV errors in the Error Log. If errors are present, refer to TTR-LEV. 2. Look for TONE-PT errors in the Error Log. If errors are present, refer to TONE-PT. 3. If neither condition exists, retry the test at 1-minute intervals a maximum of 5 times.
1004	ABORT	The port has been seized by a user for a valid call. Use **status pri-endpoint <extension>** commands to determine when the port is available for testing. 1. Retry the command at 1-minute intervals a maximum of 5 times.

Continued on next page

Table 10-452. TEST #6 NPE Crosstalk Test — *Continued*

Error Code	Test Result	Description/Recommendation
1117	ABORT	A service state audit message is outstanding. 1. Wait 2 minutes and then try again.
2000	ABORT	Response to the test request was not received within the allowable time period. 1. Retry the command at 1-minute intervals a maximum of 5 times.
2020	ABORT	The test did not run due either to an already existing error on the specific port or to a more general circuit pack error. 1. Examine the Error Log for existing errors against this port or the circuit pack and attempt to diagnose the already existing error.
2100	ABORT	Could not allocate the necessary system resources to run this test. 1. Retry the command at 1-minute intervals a maximum of 5 times.
Any	FAIL	The NPE of the tested port was found to be transmitting in error. This causes noisy and unreliable connections. The PE-BCHL is moved to the out-of-service/near-end state. 1. Replace the circuit pack.
	PASS	The port is able to communicate over the TDM Bus.

Conference Circuit Test (#7)

One or more Network Processing Elements (NPEs) reside on each circuit pack with a TDM Bus interface. (The TN464C UDS1 circuit pack has one SCOTCH-NPE chip instead of several NPE chips.) The NPE controls port connectivity and gain, and it provides conferencing functions on a per port basis. The Conference Circuit test verifies that the NPE channel for the port being tested can correctly perform the conferencing function. The NPE is instructed to listen to several different tones and to conference the tones together. The resulting signal is then measured by a tone detector port. If the level of the tone is within a certain range, the test passes.

Table 10-453. TEST #7 Conference Circuit Test

Error Code	Test Result	Description/Recommendation
	ABORT	Could not allocate the necessary system resources to run this test. 1. Retry the command at 1-minute intervals a maximum of 5 times.
1000	ABORT	System resources required to run this test are not available. The port may be in use on a valid call. Use the **status pri-endpoint <extension>** command to determine when the port is available for testing.
1004	ABORT	The port has been seized by a user for a valid call. Use the **status pri-endpoint <extension>** command to determine when the port is available for testing. 1. Retry the command at 1-minute intervals a maximum of 5 times.
1020	ABORT	The test did not run due either to an already existing error on the specific port or to a more general circuit pack error. 1. Examine Error Log for existing errors against this port or against the circuit pack, and attempt to diagnose the already existing error.
2000	ABORT	Response to the test request was not received within the allowable time period.
2100	ABORT	Could not allocate the necessary system resources to run this test. 1. Retry the command at 1-minute intervals a maximum of 5 times.
Any	FAIL	The NPE of the tested port did not conference the tones correctly. This causes noisy and unreliable connections. 1. Replace the circuit pack. Even though wideband calls do not use the conferencing feature on the NPE, this failure indicates problems with the circuit pack hardware.
	PASS	The port can correctly conference multiple connections. User-reported troubles on this port should be investigated by using the other port tests and by examining the terminal adapter or the external wiring.

Audit and Update Test (#36)

This test sends port level translation data from the switch processor to the UDS1 interface circuit pack to ensure that the port's translation is correct. The port audit operation verifies the consistency of the current state of the port that is kept in the UDS1 interface circuit pack and in the switch software.

Table 10-454. TEST #36 Audit and Update Test

Error Code	Test Result	Description/Recommendation
	ABORT	Internal system error
2000	ABORT	Response to the test request was not received within the allowable time period.
2100	ABORT	Could not allocate the necessary system resources to run this test. 1. Retry the command at 1-minute intervals a maximum of 5 times.
	FAIL	The test failed due to Internal system error. 1. Retry the command at 1-minute intervals a maximum of 5 times.
	PASS	The port translation has been updated successfully. The current port states kept in the UDS1 interface circuit pack and in the switch software are consistent. If the port is busied out, the test does not run, but returns PASS. To verify that the port is in-service: 1. Enter **status pri-endpoint <extension>** to verify that the port is in-service. If the port is in-service, no further action is necessary. If the port is out-of-service, go to Step 2. 2. Enter the **release pri-endpoint <extension>** command or the **release port <PCSSpp>** command to put the port back into in-service. 3. Retry the test command.

Signaling Link State Check Test (#255)

As is noted in the general description for a PRI Endpoint Port, the operation of the PRI Endpoint Port depends on the health of the UDS1 interface circuit pack and of the TN765 Processor Interface Link. This test checks the status of those critical elements.

Table 10-455. TEST #255 Signaling Link State Check Test

Error Code	Test Result	Description/Recommendation
	ABORT	Internal system error 1. Retry the command at 1-minute intervals a maximum of 5 times.
1700	ABORT	Rollabout video abort. The PRI terminal adapter associated with this PRI endpoint extension is detached from the circuit pack. This is a normal abort when the rollabout video feature is enabled. To complete the test on this port, do one of the following: 1. Re-attach the disconnected PRI terminal adapter, or 2. Disable the rollabout video feature on this circuit pack by entering the **change ds1 PCSS** command, and set the field “Alarm when PRI Endpoint Detached?” to “y.”
4	FAIL	There is a problem with the Signaling Channel and/or with the Processor Interface Link. 1. Consult the procedure for the ISDN-PRI Signaling Group (ISDN-GRP) and/or the procedures for Processor Interface Link (PI-LINK). Further information may also be obtained by consulting the procedures for the ISDN-PRI Signaling Channel (ISDN-LNK).
8	FAIL	There is a problem with the UDS1 interface circuit pack. 1. Consult the procedures for UDS1 interface circuit pack (UDS1-BD).
	PASS	The signaling link hardware is okay.

Service State Audit (#256)

As is noted in the general description for PRI Endpoint Port, these ports may be in one of several service states as defined by the ISDN-PRI Specification. This test performs a service state audit with the far-end terminal adapter to ensure that both sides agree on the service state.

A PASS for this test simply means that an audit message was successfully composed and sent out to the far-end terminal adapter. The ISDN Specification allows up to two minutes for a reply. If no reply is received within that two minute window, this switch automatically tries once again. If that attempt fails, an error is logged (Error Type 3073), and the switch attempts a recovery by automatically retrying approximately every 15 minutes. If the port was initially in the INS (in-service) state, it is now placed into the MTC/FE (maintenance state, far-end problem) state. Until a Service State Audit attempt is successful, no outgoing calls are placed over this port, but incoming calls are be accepted. The service state of this port does not affect the service state of other ports in the PRI Endpoint. If an incoming call that uses this port is presented while in such a state, a Service State Audit attempt is immediately attempted (that is, the switch does not wait for the 15 minute cycle, but instead tries to recover immediately). To investigate the status of this PRI Endpoint Port, issue the **status pri-endpoint <extension>** command.

Table 10-456. TEST #256 Service State Audit Test

Error Code	Test Result	Description/Recommendation
1113	ABORT	The signaling link has failed. As a result, the system cannot send any messages on behalf of this port. 1. Check the results of Test #255 (Signaling Link State Check).
1117	ABORT	A service state audit message is outstanding. 1. Wait two minutes and try again.
1700	ABORT	Rollabout video abort. The PRI terminal adapter associated with this PRI endpoint extension is detached from the circuit pack. This is a normal abort when the rollabout video feature is enabled. To complete the test on this port, do one of the following: 1. Re-attach the disconnected PRI terminal adapter, or 2. Disable the rollabout video feature on this circuit pack by entering the **change ds1 PCSS** command, and set the field “Alarm when PRI Endpoint Detached?” to “y.”

Continued on next page

Table 10-456. TEST #256 Service State Audit Test — *Continued*

Error Code	Test Result	Description/Recommendation
2100	ABORT	Could not allocate the necessary system resources to run this test. 1. Retry the command at 1-minute intervals a maximum of 5 times.
	FAIL	Internal system error 1. Retry the command at 1-minute intervals a maximum of 5 times.
	PASS	Wait 4 minutes and then check the Error Log for any new occurrences of Errors Type 3073. If there are no occurrences of this error, both sides of the ISDN connection agree on the service state, and the negotiation succeeded. If there is a new occurrence of Error Type 3073, the negotiation failed (that is, the far-end terminal adapter twice failed to respond within the mandatory two minute window). This switch automatically retries approximately every 15 minutes. If the port was initially in the INS (in-service) state, it is now be placed into the MTC/FE (maintenance, far-end problem) state (refer to the “Service States” section, which precedes the PE-BCHL “Hardware Error Log Entries and Test to Clear Values” table). Incoming calls are accepted, but no outgoing calls are originated from this port. If an incoming call is presented, another Service State Audit is immediately performed in an attempt to bring the PRI Endpoint Port to the proper state.

Call State Audit Test (#257)

If a call is active on the port, the switches on both sides of the connection should agree on the ISDN state of the call as defined in the ISDN Protocol Specification. This test audits internal call state data by querying the far-end terminal adapter about the ISDN state of the call. It can be helpful when trying to clear a hung call. If the internal call state data on the near-end switch is different than that of the far-end terminal adapter, **the call is torn down.**

As with Test #256 (Service State Audit), a PASS simply means that an appropriate message was composed and sent to the far-end terminal adapter. The ISDN Specification allows up to two minutes for a reply. If a reply is not received within the two minute window, a protocol time-out violation is recorded in the error log against the associated signaling channel (ISDN-PRI Signaling Link Port, which is listed in the Error Log as ISDN-LNK; the Error Type is 1).

Table 10-457. TEST #257 Call State Audit Test

Error Code	Test Result	Description/Recommendation
1019	ABORT	An audit is already in progress. 1. Wait two minutes and try again.
1113	ABORT	The signaling link has failed. As a result, the system cannot send any messages on behalf of this port. 1. Check the results of Test #255 (Signaling Link State Check).
1116	ABORT	The port is in an out-of-service ISDN service state. 1. A call cannot be present if the port is in an ISDN out-of-service state. As a result, a call state audit would be inappropriate, and no action is necessary. (Use the **status pri-endpoint <extension>** command to investigate the ISDN state of the port).
1700	ABORT	Rollabout video abort. The PRI terminal adapter associated with this PRI endpoint extension is detached from the circuit pack. This is a normal abort when the rollabout video feature is enabled. To complete the test on this port, do one of the following: 1. Re-attach the disconnected PRI terminal adapter, or 2. Disable the rollabout video feature on this circuit pack by entering the **change ds1 PCSS** command, and set the field “Alarm when PRI Endpoint Detached?” to “y.”

Continued on next page

Table 10-457. TEST #257 Call State Audit Test — *Continued*

Error Code	Test Result	Description/Recommendation
2100	ABORT	Could not allocate the necessary system resources to run this test. 1. Retry the command at 1-minute intervals a maximum of 5 times.
	FAIL	Internal system error 1. Retry the command at 1-minute intervals for a maximum of 5 times.
	PASS	This switch sent a call state auditing message to the far-end terminal adapter to verify the state of the call active on this port. If a call state mismatch is found, the call is torn down within two minutes. If no call was active, no message was sent.

PI-BD (Processor Interface Circuit Pack)

MO Name (in Alarm Log)	Alarm Level	Initial Command to Run[1]	Full Name of MO
PI-BD	MINOR	test interface PCS sh	Processor Interface Circuit Pack
PI-BD	WARNING	test interface PCS sh	Processor Interface Circuit Pack

1 Where P is the port network number (1 for PPN only); C is the carrier designation (for example, A or B for processor complex circuit packs); and S is the address of the slot in the carrier where the circuit pack is located (for example, 1 or 2 for either the first or second Processor Interface circuit packs).

The TN765 Processor Interface (PI) circuit pack provides a front-end processor to the TN777 Processor circuit pack. The PI circuit pack implements the packet layer and link layer of the X.25 protocol (DCS, AUDIX, CMS, OCM links) as well as the link layer of the ISDN-PRI protocol (ISDN links). A system without high or critical reliability supports up to two circuit packs. A high or critical reliability system supports up to four Processor Interface circuit packs, two in each carrier. Only one pair of the circuit packs on a single carrier can be active at a given time. The other two are in Standby mode. The TN765 is a downloadable circuit pack. This means that at reboot, system power-up, or via system technician command, Processor Interface firmware is downloaded to the circuit pack. For other restarts, a Checksum Test is performed on the firmware. If the Checksum Test fails, then the firmware is downloaded again. The firmware can be automatically downloaded at any time using the **reset interface PCS** system technician command.

On the Active SPE complex or in an unduplicated system, Processor Interface maintenance is used for alarming the circuit pack. If System Communication Interface (PI-SCI) finds an error or alarm condition that can be associated with an on-board problem with the Processor Interface (PI-BD) circuit pack, then it alarms both the System Communication Interface and the Processor Interface circuit pack. Processor Interface circuit pack maintenance is also used to test the common circuit pack functions on the circuit pack. If these tests fail, a circuit pack level alarm is raised on the Processor Interface circuit pack (PI-BD). Port level alarms are raised against PI-PT. See PI-PT (Processor Interface Port) Maintenance documentation for details.

On the Standby SPE complex, the testing of the Processor Interface circuit pack is different. The Standby Processor Interface circuit pack is tested daily via scheduled maintenance or on system technician demand. These tests are to check the Standby PIs hardware and firmware so that if an SPE interchange takes place, the Processor Interface communication links (DCS, ISDN, or AUDIX, for example) recover on the new Active Processor Interface circuit pack in a short time. If the firmware checksum fails during scheduled maintenance, then the circuit pack can be downloaded again at this time instead of during the SPE

interchange. The Processor Interface firmware can be unconditionally downloaded to the Standby SPE circuit pack via the **reset interface PCS** command, where PCS is the carrier/slot of a Standby PI. The command executes the Standby Processor Interface Board Test (#423), but with a download option.

The Active Processor Interface circuit pack is tested in the PI-SCI (System Communication Interface) Maintenance documentation. Refer to that section for details. The test command is **test interface PCS** where PCS is the port network number, carrier, and slot of one of the Standby Processor Interface circuit packs. If the Standby Processor Interface circuit pack is tested, the test sequence for the Standby Processor Interface is followed. If the Active Processor Interface circuit pack's PCS is given, then tests in the Active Processor Interface test sequence are run. On the Active PI, if there are no enabled Processor Interface links on the Communication-Interface Links Form, only the XXX-BD (Common Port Circuit Pack) tests execute.

Error Log Entries and Test to Clear Values

Table 10-458 indicates entries that may be found in the Error Log for Processor Interface circuit packs. Since the Processor Interface circuit pack has common port board functionalities, then cross reference XXX-BD (common port board) maintenance information for more information. Test #423 is the only test described in this section. XXX-BD maintenance describes the other tests mentioned in the following table.

Table 10-458. PI-BD Error Log Entries

Error Code	Aux Data	Associated Test	Alarm Level	On/ Off Board	Test to Clear Value
0[1]	0	Any	Any	Any	test interface PCS sh r 1
1 (a)	0	Circuit pack removed or SAKI Test (#53)	MINOR	ON	
23 (b)	0	None	WARNI NG	OFF	
54 (c)	0	None	MAJOR	ON	test interface PCS l
124 (d)	Any	None	MAJOR	ON	test interface PCS l
125 (e)		None	MINOR	ON	
257	65535	Control Channel Test (#52)	MINOR	ON	test interface PCS
257 (f)	Any	None			
513 (g)	Any	None			
769 (h)	4358	None			

Continued on next page

Table 10-458. PI-BD Error Log Entries — *Continued*

Error Code	Aux Data	Associated Test	Alarm Level	On/ Off Board	Test to Clear Value
1025 (i)	4363	NPE Audit Test (#50)			test interface PCS sh
1538 (j)	Any	None	MINOR	ON	
3585 (d)	Any	None Test (#423)	MAJOR	ON	reset interface PCS l
3840 (i)	Any	None			
3841	Any	Standby PI Circuit Pack Test (#423)	MAJOR	ON	test interface PCS sh
3999(k)	Any	None			

1 Run the Short Test Sequence first. If all tests pass, run the Long Test Sequence. Refer to the appropriate test description and follow the recommended procedures.

WARNING:
The "test interface long" command resets the PI-BD and cause all ISDN-PRI and BX.25 links to come down.

Notes:

a. Indicates the circuit pack totally stopped functioning or it was physically removed from the system.

NOTE:
The alarm is logged about 11 minutes after the circuit pack has been removed and/or SAKI Test (#53) fails.

If the circuit pack is not in the system, insert a circuit pack (in the same slot as the error indicates) to resolve this error. Or, if the circuit pack is in the system and the red LED is on, then replace the circuit pack.

CAUTION:
Reseating the circuit pack may cause a system restart if the circuit pack is located on an Active SPE complex.

If this is a Duplicated Option system, verify that there is an equal number of Processor Interface circuit packs in each SPE complex. If there is not an equal number of Processor Interface circuit packs, this condition could cause alarms on the STBY-SPE, DUPINT, SHDW-CIR, as well as the PI-BD.

b. The circuit pack has been logically administered but not physically installed. If this alarm remains active for more than 30 minutes, follow normal escalation procedures. **DO NOT PHYSICALLY RESEAT THE CIRCUIT PACK!** The alarm is cleared when the circuit pack is installed and initialization maintenance runs on it. The Standby Processor Interfaces alarm is cleared when Standby maintenance runs on it.

c. Processor Interface-SCI detected an error while trying to reset the TN765 PI circuit pack. This error indicates a loss of communication with the circuit pack. If this error continues, then replace the TN765 circuit pack. Refer to Chapter 6, ''Reliability Systems: A Maintenance Aid'' for instructions on how to replace an SPE complex circuit pack. See PI-SCI Maintenance documentation for additional errors.

d. PI-SCI logged errors that resulted in an error being logged and an alarm being raised against PI-BD. Refer to the PI-SCI Maintenance documentation and resolve all alarms against PI-SCI. If this alarm resulted in an SPE-interchange, issue the **test interface PCS sh** command to try to resolve the PI-BD alarm.

e. A wrong circuit pack is inserted in the slot where this circuit pack is logically administered. To resolve this problem, either remove the wrong circuit pack and insert the logically administered circuit pack OR use the **change circuit-pack** command to re-administer this slot to match the circuit pack inserted.

f. This error indicates transient communication problems with this circuit pack. This error is not service-affecting and no action is required.

g. This error, when reported with Aux Data in the range of 4352 to 4358, indicates the circuit pack has reported a hardware failure on the circuit pack. The circuit pack should be replaced. Refer to Chapter 6, ''Reliability Systems: A Maintenance Aid'' for instructions on how to replace an SPE complex circuit pack.

h. This error can be ignored, but look for other errors on this circuit pack.

i. This error is not service-affecting and no action is required.

j. The hyperactive circuit pack is out-of-service and may exhibit one or more of the following symptoms:

   1. The common circuit pack level tests such as Test #51 and/or Test #220 are aborting with Error Code 2000.

   2. The tests run on the ports of this circuit pack are returning with a NO-BOARD.

   3. A **list configuration** command shows that the circuit pack and ports are properly installed.

   The system tries to restore the circuit pack within 15 minutes. If the error recurs after 15 minutes, replace the circuit pack. (Refer to the “Handling Control Circuit Packs” section in Chapter 5, ''Routine Maintenance Procedures''.)

k. Error type 3999— Indicates that the circuit pack sent a large number of control channel messages to the switch within a short period of time. If error type 1538 is also present, then the circuit pack was taken out-of-service due to hyperactivity. If error type 1538 is not present, then the circuit pack has not been taken out-of-service, but it has generated 50% of the messages necessary to be considered hyperactive. This may be completely normal during heavy traffic periods. However, if this error type is logged when the circuit pack is being lightly used, it may indicate a problem with the circuit pack or the equipment attached to it.

System Technician Demanded Tests: Descriptions and Error Codes

Always investigate tests in the order presented in the table below when inspecting errors in the system. By clearing error codes associated with the *Standby Processor Interface Circuit Pack Test,* for example, you may also clear errors generated from other tests in the testing sequence.

Order of Investigation	Short Test Sequence	Long Test Sequence	D/ ND[1]
Standby Processor Interface Circuit Pack Test (#423)	X	X	ND
Standby Processor Interface Port Test (#404) (a)	X	X	ND
Control Channel Loop Test (#52)	X	X	ND
NPE Audit Test (#50)	X	ND	

1 D = Destructive; ND = Nondestructive

Note:

a. This test is repeated up to four times since there are four ports on the circuit pack. Cross-reference PI-PT (Processor Interface Port) Maintenance documentation for information about these tests.

Control Channel Loop Around Test (#52)

Refer to the repair procedure described in the XXX-BD (Common Port Circuit Pack) Maintenance documentation as Control Channel Loop Around Test (#52).

NPE Audit Test (#50)

Refer to the repair procedure described in the XXX-BD (Common Port Circuit Pack) Maintenance documentation as NPE Audit Test (#50).

Standby Processor Interface Circuit Pack Test (#423)

This test is run only in a High or Critical Reliability system. This test is run on Processor Interface circuit packs that are currently in Standby Mode and thus no active calls are up on these circuit packs. It is very important to periodically test the Standby Processor Interface circuit packs to ensure their health in case of an SPE-interchange. This test is run either by system technician demand (**test interface PCS** or **reset interface PCS**) or during scheduled maintenance. The test resets the circuit pack. The main purpose of this test is to perform a Checksum Test on the downloadable firmware or to download new Processor Interface firmware if the **reset interface PCS** command is used. If the checksum fails, then the firmware is downloaded again from the tape.

Table 10-459. TEST #423 Standby PI Board Test

Error Code	Test Result	Description/Recommendation
9,10	ABORT	Internal system error 1. Retry the command at 1-minute intervals a maximum of 5 times.
1029 1030 2011 2012 2013 2014 2015 2016 2017 2018 2020 2022 2024 2025 2051	ABORT	Refer to “STBY-SPE” for a description of these error codes.
1124	ABORT	There are currently no enabled Processor Interface links in the system. 1. Wait and run this test when links are enabled and the PI-SCI (System Communication Interface) has been started up.
1	FAIL	Could not reset the Processor Interface circuit pack. 1. Wait 1 minute, and retry the command. 2. If this test continues to fail, replace TN765 Processor Interface (PI) circuit pack. Refer to Chapter 6, ‘‘Reliability Systems: A Maintenance Aid’’ for instructions on how to replace an SPE complex circuit pack.

Continued on next page

Table 10-459. TEST #423 Standby PI Board Test — *Continued*

Error Code	Test Result	Description/Recommendation
16 80 94 102	FAIL	Internal system error 1. Retry the command at 1-minute intervals a maximum of 5 times. 2. If problem still exists, redownload firmware using the **reset interface** command.
23 199	FAIL	Download of Processor Interface firmware failed. 1. Wait 1 minute and retry. A tape access problem could be present. Check that tape is in tape drive. 2. If the problem persists and Standby TAPE is idle when command is entered, then a problem could exist in either the Standby TAPE or the Processor Interface circuit pack. Replace the tape with a new tape that contains Processor Interface firmware. Retry the command. 3. If the problem still exists, then refer to the TAPE Maintenance documentation for possible TAPE errors. If there are no TAPE errors, repeat the test command up to 5 times. If problem still exists, replace the TN765 circuit pack. Refer to Chapter 6, ''Reliability Systems: A Maintenance Aid'' for instructions on how to replace an SPE complex circuit pack. 4. If problem still exists with new TN765 Processor Interface circuit pack, replace TAPE drive.
9000s	FAIL	Processor Interface Download failed. 1. Refer to TABLE A, Tape Unit Data Table, and follow the repair recommendations.
	PASS	TN765 Processor Interface circuit pack initialized correctly. Processor Interface links (X.25 and ISDN) should recover now. See “PI-LINK” for more information if links do not recover.

PI-LINK (Processor Interface Link)

MO Name (in Alarm Log)	Alarm Level	Initial Command to Run	Full Name of MO
PI-LINK	MAJOR	test link lnk-no l	Processor Interface Link
PI-LINK	MINOR	test link lnk-no l	Processor Interface Link
PI-LINK	WARNING	test link lnk-no l	Processor Interface Link

NOTE:
Reference lnk-no using the **display communication-interface links** command.

The Processor Interface (PI) Communication Link is the physical link that connects DEFINITY to an adjunct such as AUDIX, another node in a DCS network, or an ISDN-PRI connection. These links are either X.25 (DCS, AUDIX, or MIS) or ISDN (ISDN-PRI). The system supports up to four of these links per TN765 Processor Interface circuit pack. PI-LINK maintenance actually monitors several hardware devices: Processor Interface ports, TN754 or TN784 Digital Line ports, PDMs, TDMs, MTDMs, MPDMs, and DS1 facilities. Henceforth, “data module” refers to either PDM, TDM, MPDM, or MTDM. **In much of the following link documentation, the repair procedures described mention various hardware configurations. Choose the procedure appropriate to your configuration.**

The Processor Interface circuit pack provides an EIA connection. This connection can be administered only on Link 1 in a system without High or Critical Reliability. The EIA port is used when an adjunct (AUDIX, for example) is near (less than 25 feet) or further if a modem is used. The EIA port can also be used to connect two PBXs together via DCS. The EIA port cannot be used in a High or Critical Reliability system.

The Processor Interface Link can be in three different states. These states can be seen using the **status link lnk-no** system technician command. If the link is in a *maintenance busy* state, then the system technician had instructed the Processor Interface to be in maintenance busy by entering the **busyout link lnk-no** command or the Processor Interface Link is not established and maintenance is trying to bring it up. This probably means that an error condition is occurring somewhere on the link that keeps the link from being logically connected and carrying data. If the link is busied out, then it can be put back into service by issuing a **release link lnk-no** command. This restarts the link. If the link is for DCS, then it may speed the recovery of the link if **busyout link lnk-no** and **release link lnk-no** are executed on the switch that is establishing the connection (see the Communication-Interface Links form). The link can be in a *disconnected* state if the link cannot be started up. In this case, maintenance tries to establish the link periodically. If the link is up and data is being sent successfully, then the link is in the *in-service* state.

NOTE:
When an ISDN-PRI link is busied out via a system technician command, the associated B-channels (ISDN-TRK) are moved to the maintenance and/or far-end state. As a result, stable calls are NOT dropped, but the trunks are removed from the trunk hunt group to prevent them from being selected for outgoing calls. See ISDN-TRK Maintenance documentation.

Up to two Processor Interface circuit packs can be active on the same carrier in the system. Thus, there can be a maximum of eight Processor Interface links in service at any one time. If an error or alarm is detected by PI-LINK that can be associated with a physical port on the Processor Interface circuit pack, then the Processor Interface Port MO is alarmed, which indicates a defective port on the circuit pack. Refer to the PI-PT (Processor Interface Port) Maintenance documentation for details.

It is useful to use the **status processor-channel channel-no** command when troubleshooting the PI-LINK. A processor channel corresponds to a processor application (also called a session) and more than one may be using the same physical link (only for X.25 links). The relevant field of the status screen is the “channel status:” which can be in 1 of 7 different states (see the following table). State 6 is normal state for the processor channel for X.25 links and state 10 is normal state for ISDN links. States 9 and 10 are only applicable to ISDN links.

States	Description
1	Incorrect translations or channel not assigned.
3	Attempting to reset the channel but no response from the other end. Getting stuck in this state may be caused by hardware problems, a DS1 synchronization problem or a DCE/DTE conflict in the Communication-Interface Link Form (one end of the link must be DCE and the other must be DTE).
4	The other end acknowledged the channel reset (the two ends are physically connected) but a processor channel connection has not occurred yet. Getting stuck in this state may indicate that translations are incorrect, such as remote processor channel mismatch. To recover from this situation, execute the **busyout link lnk-no** and **release link lnk-no** commands. If this is unsuccessful, then use the **reset interface** command (note that this is a **destructive** command that tears down all four links). This problem may also be caused by a noisy link or DS1 synchronization problems.
6	This is the normal state of the channel. The link is in the data transfer state which means that the application is able to send data over the link.

Continued on next page

States	Description
7	One or more unexpected messages have arrived; software is attempting to resynchronize the two ends. Usually it takes up to five minutes for the software to recover once it is in this state.
9	ISDN-PRI link is currently down. It is periodically restarted or can be forced to restart via **busyout/release link lnk-no**.
10	ISDN-PRI link is up. This is the normal state of the channel. The link is in data transfer state, which means that ISDN data can be sent over the link.

Figure 10-82 shows the Processor Interface Communications Link (PI-LINK) Interactions.

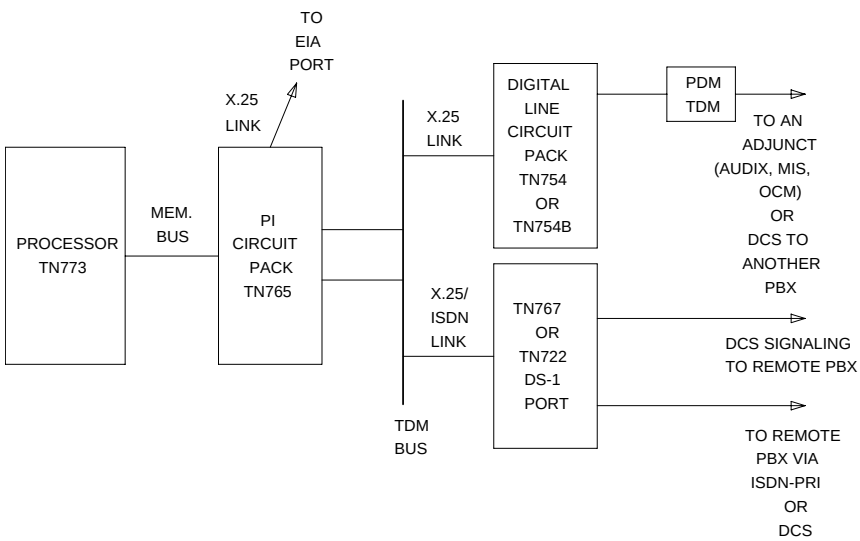

Figure 10-82. Processor Interface Link Interactions

Error Log Entries and Test to Clear Values

Table 10-460. PI-LINK (Processor Interface Link) Error Log Entries

Error Code	Aux Data	Associated Test	Alarm Level	On/Off Board	Test to Clear Value
0[1]	0	Any	Any	Any	test link <lnk-no> sh
1 (a)	Any	none	MAJOR/ WARNING[2]	OFF	busyout/release link lnk-no
18	0	busyout link lnk-no	WARNING	OFF	release link lnk-no
257 (b)	Any	none	MINOR/ WARNING[2]	OFF	busyout/release link lnk-no
263 (c)	Any	none	MAJOR/ WARNING[2]	OFF	busyout/release link lnk-no
513 (d)	Any	none	MAJOR/ WARNING[2]	OFF	busyout/release link lnk-no
769	Any	PI Loop Around Test (#182)	WARNING	ON	test link lnk-no l r 2
1025	Any	TDM Loop Around Test (#183)	WARNING	OFF	test link lnk-no l r 2
1281 (n)	Any	none	WARNING/ MAJOR[3]	OFF	test link lnk-no sh r 2
1537 (e)	Any	none	WARNING/ MAJOR[3]	OFF	busyout/release link lnk-no
1793 (f)	Any	none	WARNING	OFF	busyout/release link link no.
2049 (g)	Any	none	WARNING/ MAJOR[3]	OFF	test link lnk-no sh r 9
2305 (h)	Any	none	WARNING	OFF	test link lnk-no sh r 9
2561 (i)	Any	none	WARNING/ MAJOR	OFF	busyout/release link lnk-no
2817 (j)	Any	none	NONE	OFF	busyout/release link lnk-no
3073 (k)	Any	none	WARNING	OFF	test link lnk-no sh r 9
3585 (l)	Any	none	MAJOR/ WARNING[2]	OFF	busyout/release link lnk-no
3841 (m)	Any	none	MINOR/ WARNING[2]	OFF	busyout/release link lnk-no

1 Run the Short Test Sequence. If all tests pass, run the Long Test Sequence. Refer to the appropriate test description and follow the recommended procedures.

2 Major and Minor alarms may be downgraded to Warning based on the value in **set options**.

3 This error type initially raises a warning alarm. If it persists, and alarms are not downgraded on this MO due to the values of **set options**, then a Major alarm is raised.

Notes:

a. A permanent switched call was dropped. Check the ‘‘Link Recovery’’ section.

b. The TN765 Processor Interface circuit pack detected an error on a specific link via background maintenance. If the link is down, busyout and then release the link. If this fails, check all connections. If the error reappears consistently, see ‘‘Link Recovery’’ section.

c. Processor Interface software or firmware detected an error condition on this link. Internal software should initiate the recovery for the link. If the link is still down, see the ‘‘Link Recovery’’ section.

   Aux values of concern; any others can be ignored.

   0 Processor Interface circuit pack indicates that the ISDN-PRI link is down.

   1 An internal software audit indicates that this link has been in overload for at least 20 seconds and is hung.

   2 No internal software buffers are available to process a link transition (that is, down to up, or up to down). The transition is lost.

   17 The allocation of a new software write buffer to the Processor Interface circuit pack failed.

d. Translation Error—check all administration for the link. Possibly the destination DS1-BD or DIG-BD is not inserted. Busyout and then release the link to restart it. This is not a Processor Interface hardware problem.

   Aux values of concern; any others can be ignored.

2 Link translation error. If the communication-processor link form indicates this link’s destination is a tac+extension, then bring up the dial plan form. If an extension exists with the same first digit as the tac, then this PI link will not establish. To alleviate this problem, either remove the extension on the dial plan form, or change the destination field on the communication-processor link form to use a UDP extension to dial the far-end.

8 Port not administered in software.

e. This error occurs when the Processor Interface link fails to be established. Check all connections and administration. This could also occur as a result of another error, the failure of Test #182, for example. If the other error on the link can be cleared, then this error may also clear. See the ‘‘Link Recovery’’ section.

1, 2	System error.
7	System error. If this error is occurring on all administered links with the same Aux Data and all links are alarmed, then execute the **reset interface** command to restore all the links.
12	One of the two Loop Around Tests failed (#182 or #183). See the “Link Recovery” section.
13	Hardware problem with DS1 facility is affecting ISDN links. Refer to DS1-BD Maintenance documentation.
19	A transient state associated with the D-channel backup protocol. The link is being held in the busy state until call control can be moved to the new active link. No action needs to be taken.
32771 32772	The remote endpoint indicates that the call is up and the local PBX cannot complete the call. Check trunk status (on the remote end and local end) if a DS1 trunk is used, or check the status of the data module if a data module is used in the link. The commands are **status trunk trk-grp/ member** or **status data-module <ext>**. If the destination is in-service/active, then the commands are **busyout trunk trk-grp/member** and **release trunk trk-grp/member** (on both sides of the link if this is a DCS link). If a data module is used in the link, then use a **busyout data-module <ext>** command followed by a **release data-module <ext>** command. Busy out the Processor Interface Link prior to busying the trunk or data module. Release the Processor Interface Link via **release link lnk-no** command and the Processor Interface Link re-starts. If this fails, check the status of the TN765 port using **status data <ext>** where **<ext>** is the extension of the port from the interface extension in the Display Communication Link form; if the state is “in-service/idle” then manually call the TN765 port and transfer the call to appropriate destination, either a DS1 Trunk Access Code or the data module extension. See “Link Recovery” if error still occurs. See “Link Recovery” if error still occurs and link does not establish.
32779 32782 32801	Administration problem; check that the Processor Interface data module extension exists via the **status data-module <ext-no>** command. Verify that the destination extension exists and that the correct routing pattern is used. In addition, check that the Processor Interface data module and the destination extension are administered on the COS and/or COR forms.
32813	Administration problem; check all administration.

32815	The off-premise call timed-out. Check the “Off-Premises Tone Detect Timeout Interval” on the Feature-Related System Parameters Form. The time-out is administered between 6 and 25 seconds. No response was received from the remote destination. Check the status of the remote destination. This might also indicate possible synchronization problems. Network synchronization sources should be checked on all networked switches. Also see the SYNC Maintenance documentation.
32814	Call was answered but not by a remote data module. Check the remote destination extension and verify that this is a data module.
32841	Call went over the trunk and received ring back but did not receive modem answer tone. Check the remote destination for automatic answering.
65528	Administration problem; check all administration.
65532	Call setup timed out; retry, and check destination. If the destination is an adjunct (CMS, AUDIX, etc.), then check if the terminal ready light is lighted on the PDM. If not, then the adjunct is down. If the destination is another PBX, then the PBX might be restarting. Retry.
65535	Link specified is out-of-range (1 through 8).

f. This error message indicates that the TN765 Processor Interface circuit pack could not transmit the message the software sent to it. See the ‘‘Link Recovery’’ section if the error continues. This is a normal error during “hot start” SPE-interchanges.

g. Excessive resets on the link. Usually indicates that the remote end is down or the physical connection is broken. A warning alarm is raised initially, followed by a Major alarm if the problem is not cleared. See the ‘‘Link Recovery’’ section.

h. Excessive I-frame retransmission. Could indicate a noisy link. Recover as in previous note. Aux values indicate the retransmission rate per minute. See the ‘‘Link Recovery’’ section.

i. If the Aux Data value is 9, then the destination circuit pack (DIG-BD or DS1-BD) is not inserted. Otherwise, DS1 maintenance detected a hardware failure. (DS1 cable disconnected, loss of signal, DS1-BD problems.) Not a Processor Interface Link problem. Check DS1-BD maintenance. Only applicable to ISDN links. Aux value useless. Once the DS1 signal is restored, maintenance automatically restarts the Processor Interface Link. To hasten this process, test the appropriate DS1 Interface circuit pack via **test board PCS** command. When Test #138 (loss of signal) passes, the Processor Interface Link recovers shortly.

   In addition to an indication that the link failed to establish the PI-LINK 2561 AUX_Data, the hardware error log is also updated. This error may indicate two possible conditions:

   1. A failure to detect the DTR from the peripheral.

      When the DTR is not detected by the data module the AUX_Data is set to 40. This indicates that the problem is most likely with the peripheral or the connection to the peripheral.

   2. A time-out on the EIA interface query request to the data module.

      When the data module fails to respond to the EIA interface (query request) the AUX_Data is set to 41. This may indicate problems with the data module or connection to the data module. Other errors specific to the data module may also be logged if this is the case.

j. TN765 PI-BD determined that the ISDN link went down. Check connectivity with the other end. Busyout and then release the link to recover. Occurs if DS1 maintenance detected a problem or the remote end is busied out or is down. This also occurs if the ISDN link is unstable or if there is excessive noise on the line. See the ''Link Recovery'' section.

k. Excessive LAPD (link-access procedure on the D-channel) invalid frame errors. Could be a noisy line or problems with the TN765 Processor Interface circuit pack. Also check DS1-BD Maintenance documentation. See the ''Link Recovery'' section.

l. Occurs 90 seconds after a 2817 Error Code if link does not recover. At this time, all ISDN trunks associated with this link are put into a maintenance far-end state (see ISDN-TRK for details). See the ''Link Recovery'' section.

m. The application level process associated with the link has failed to establish a data connection with the far end. This problem prevents data from being processed. The condition may exist even if the link is in a data transfer state. Busyout, and release the link to restart it. This is not a Processor Interface hardware problem.

   Aux values of concern; any others can be ignored.

433	OCM application did not start correctly. Reboot the OCM adjunct.
435	Application level process could not connect to session layer process.

n. Excessive (over threshold) HDLC transmit or receive error rates were reported. Aux Data is the HDLC error rate reported. See the Link Recovery section for troubleshooting this problem

Link Recovery

This section describes the general procedure to take to recover from link errors and alarms. Refer to the “Troubleshooting ISDN-PRI Problems” section in Chapter 5, ‘‘Routine Maintenance Procedures’’, before proceeding with this ‘‘Link Recovery’’ strategy.

1. Determine the link status using the **status link** command. If the link status is “in-service” and (for X.25 links) all the pairs of processor channels are complete under “LOCAL/REMOTE PROCESSOR CHANNELS” (that is, every “/” is followed by a processor channel number, not a blank), then the link is operating correctly and no further action should be taken. If the link status is not “in-service,” then go to Step 2. If the link status is “in-service” and (for X.25) some of the processor channel pairs are incomplete (remote channel not specified, meaning that the processor channels are not connected), then look at the status of “status processor-channel” for the local processor channels that are not connected.
2. Look for active PI-SCI alarms and follow the procedure for those alarms if there are any. If there are no PI-SCI problems, go on to the next step.
3. If the link is still down, restart the link via the **busyout link lnk-no** system technician command followed by the **release link lnk-no** command. This sequence tears down the call and then tries to bring it back up. If the link is for DCS, it may speed the recovery of the link if **busyout link lnk-no** and **release link lnk-no** commands are executed on the switch that is establishing the connection (see Communication Link form). If the link does not recover, go on to the next step.
4. Check the status of the remote endpoint.
   a. If the link is busied out, release it.
   b. Is the switch down or restarting?

5. If link was never brought up:
   a. Verify that the administration is correct as follows:
      — Enter the **display ds1 PCSS** command. Check the compatibility of the DS1 parameters with the far-end and the CSU.
      — Enter **display communication-interface links** command.
      — Enter the **display communication-interface processor-channels** command. Enter the **display communication-interface hop-channels** command (if hop-channels are being used).
      — Enter the **display trunk <grp>/<mbr>** command (if DS1 is being used for DCS).
      — Enter the **status sync** command (if DS1 is being used)—make sure the primary synchronization is administered.
6. If link is an EIA link:
   — Verify via the Communication-Interface Links form that the information for the EIA connection is correct on the local and remote PBXs.
7. Try to isolate the problem in the link if hardware is at fault. Test the link via the **test link lnk-no long** system technician command.
   a. If Test #182 fails three times, replace the TN765 circuit pack. Refer to Chapter 6, ‘‘Reliability Systems: A Maintenance Aid’’.
   b. If Test #182 passes and Test #183 fails, replace the TN754 or TN784 Digital Line or the TN722 or TN767 DS1 Interface circuit pack, whichever is used in the link. If Test #183 still fails, replace the TN765 PI-BD. Refer to Chapter 9, ‘‘Packet Bus Fault Isolation and Correction’’.
8. If the preceding tests pass:

   Check the physical transmission link:
   a. Are all the circuit packs physically installed?
   b. Are the cables still connected throughout?
   c. Check DS1-BD error section for possible connectivity problems if DS1-BD is used in link connection.
   d. Check CSU options.
9. Finally, restart the Processor Interface circuit pack via **reset interface PCS**. This resets the circuit pack and restarts ALL the links on it.

System Technician-Demanded Tests: Descriptions and Error Codes

Always investigate tests in the order presented in the table below when inspecting errors in the system. By clearing error codes associated with the *PI Loop Around Test*, for example, you may also clear errors generated from other tests in the testing sequence. REMINDER: The command line entry to test the PI-LINK MO is: **test link lnk-no (s or l)**.

Order of Investigation	Short Test Sequence	Long Test Sequence	D/ ND[1]
Processor Interface Loop Around Test (#182)		X	D
TDM Loop Around Test (#183)		X	D
ISDN Hardware Test (#234)		X	ND
Link Quality Test (#233)	X	X	ND
Data Module Internal Loop Around Test (#175)[2]		X	ND
Digital Line NPE Crosstalk Test (#9)[2]		X	ND
Port Circuit Information Channel and Control Channel Loop Around Test (#13)[2]		X	ND
Data Module Audits Test (#17)[2]	X	X	ND

1 D = Destructive; ND = Nondestructive

2 If the PI-LINK under test is BX.25 and if there is an MPDM or an MTDM as part of the link, then the PI-LINK test sequence is expanded to include the tests on the data module. These tests are run via the PDMODULE or TDMODULE maintenance object. Refer to the PDMODULE TDMODULE (Data Module) Maintenance documentation for descriptions and details of these tests.

Processor Interface Loop Around Test (#182)

This test is destructive.

The Processor Interface Loop Around Test is an on-board Loop Around Test. The test requires that the system technician issue a **busyout link lnk-no** command before this test is run. This means that the DCS, AUDIX, or ISDN link, for example, is torn down. It does not access the TDM Bus at all. When the circuit pack is put into local loop around mode, frames are looped internally on the circuit pack. If the test fails, the Processor Interface circuit pack reports the failure. It is a good check of most of the working hardware on the Processor Interface circuit pack.

Table 10-461. TEST #182 Processor Interface Loop Around Test

Error Code	Test Result	Description/Recommendation
1	ABORT	Link was not busied out via system technician. 1. Busyout the link via the **busyout link lnk-no** command. 2. Retry the test command.
2 4 9	ABORT	1. Retry the command at 1-minute intervals a maximum of 5 times.
16 80 84 85 93 94 102	ABORT	Internal system error or possible TN765 PI-BD failure. 1. Retry the command at 1-minute intervals a maximum of 5 times. 2. If the test continues to abort, then reset the PI-BD via the **test interface PCS long** system technician command. 3. If problem still exists, replace the TN765 PI-BD.

Continued on next page

Table 10-461. TEST #182 Processor Interface Loop Around Test — *Continued*

Error Code	Test Result	Description/Recommendation
12	FAIL	PI-BD reported that Loop Around Test failed. 1. Retry the test. 2. If it continues to fail, try resetting the circuit pack by the **test interface PCS long** command. This TEARS down all other links on this circuit pack (DCS, AUDIX, ISDN, etc.). 3. If the problem still exists, replace the TN765 circuit pack.
	PASS	The on-board Loop Around Test on the TN765 circuit pack passed. Most of the hardware on the circuit pack was tested except for the TDM Bus buffers. If problem is isolated to TN765 and this test passes, then replace TN765 circuit pack since TDM Bus buffers could be at fault.
13	ABORT	The TN765 circuit pack has not been reset yet or is currently being reset. 1. Retry the command at 1-minute intervals a maximum of 5 times. 2. If test continues to abort with error code 13, then check status of all BX.25 and/or ISDN-PRI links on this TN765 via **status link lnk-no**. If all links are not in-service, then reset the TN765 using **test interface PCS long**. 3. If the TN765 fails to reset, refer to the PI-SCI section of this manual. 4. Retry the **test link lnk-no** command. 5. If the test still aborts with error code 13 or from step 2, and some links are in-service and an error code is still present, escalate the problem.

TDM Loop Around Test (#183)

This test is destructive.

This test requires that you enter the **busyout link lnk-no** command before running the test. This means that the DCS, AUDIX, or ISDN link, for example, are torn down. This test checks the health of the TN754 or TN784 DIG-LINE or the TN722 or TN767 DS1 Interface circuit pack. This depends on which circuit pack is used on the link. The TN754 or TN784 Digital Line or DS1 Interface circuit pack is put into loop around mode while the PI-BD is instructed to go into remote loop around. If this test fails, and the previous Test #182 passes, then the TN754 or TN784 Digital Line or the DS1 Interface circuit pack should be replaced. It is not run on ports administered as EIA.

Table 10-462. TEST #183 TDM Loop Around Test

Error Code	Test Result	Description/Recommendation
1	ABORT	Link was not busied out via system technician. 1. Busyout the link via the **busyout link lnk-no** command. 2. Retry the test command.
2 4 8	ABORT	Internal system error 1. Retry the command at 1-minute intervals a maximum of 5 times.
6	ABORT	The system could not allocate time slots for the test. The system may be under heavy traffic conditions or it may have time slots out-of-service due to TDM-BUS errors. Refer to “TDM-BUS” to diagnose TDM-BUS errors. 1. If system has no TDM-BUS errors and is not handling heavy traffic, repeat test at 1-minute intervals a maximum of 5 times.
9	ABORT	TN754 or TN784 Digital Line or TN722 or TN767 DS1 Interface circuit pack is not installed. 1. Install circuit pack and retry the test.

Continued on next page

Table 10-462. TEST #183 TDM Loop Around Test — *Continued*

Error Code	Test Result	Description/Recommendation
13	ABORT	The TN765 circuit pack has not been reset yet or is currently being reset. 1. Retry the command at 1-minute intervals a maximum of 5 times. 2. If test continues to abort with error code 13, then check status of all BX.25 and/or ISDN-PRI links on this TN765 via the **status link lnk-no** command. If all links are not in-service, then reset the TN765 using the **test interface PCS long** command. 3. If the TN765 fails to reset, refer to the PI-SCI section of this manual. 4. Else, retry the **test link lnk-no** command. 5. If the test still aborts with error code 13 or from step 2, and some links are in-service and a error code is still present, escalate the problem.
16 80 84 85 93 94 102	ABORT	Internal system error 1. Retry the command at 1-minute intervals a maximum of 5 times. 2. If the test continues to abort, then reset the PI-BD via the **test interface PCS long** command. 3. If problem still exists, replace the TN765 circuit pack.
1005	ABORT	The test is not applicable if the EIA port is being used as part of the link.
12	FAIL	PI-BD reported that Loop Around Test failed. 1. Retry the test. 2. If Test #182 fails, see section for Test #182 first. 3. If Test #182 passes and Test #183 continues to fail, replace either the TN754 or TN784 Digital Line or the TN722 or TN767 DS1 Interface circuit pack. 4. If Test #183 still fails, replace the TN765 PI-BD.
	PASS	The loop around from the TN765 PI-BD to the Digital Line or DS1 Interface circuit pack and then back to the PI-BD passed.

Link Quality Test (#233)

This test queries the TN765 circuit pack for the latest error rates (number/minute) for certain counters that are kept by the TN765. The test passes if all the error rates are below a certain threshold. The counters that are queried are the Level 2 Reset SABM(E) [Set Asynchronous Balanced Mode (Extended)] counter, the Level 2 I-frame Retransmission counter, and the invalid LAPD frame counter.

Table 10-463. TEST #233 Link Quality Test

Error Code	Test Result	Description/Recommendation
3 11 24	ABORT	Internal system error 1. Retry the command at 1-minute intervals a maximum of 5 times.
13	ABORT	The TN765 circuit pack has not been reset yet or is currently being reset. 1. Retry the command at 1-minute intervals a maximum of 5 times. 2. If test continues to abort with error code 13, then check status of all BX.25 and/or ISDN-PRI links on this TN765 via the **status link lnk-no** command. If all links are not in-service, then reset the TN765 using the **test interface PCS long** command. 3. If the TN765 fails to reset, refer to the PI-SCI section of this manual. 4. Else, retry the **test link lnk-no** command. 5. If the test still aborts with error code 13 or from step 2, and some links are in-service and a error code is still present, escalate the problem.
4 16385	FAIL	Excessive Level 2 resets (SABM) on link.
16386		Excessive Level 2 I-frame retransmission. Possible noisy link. 1. See “PI-LINK”.
16388	FAIL	Excessive LAPD invalid frame errors. Could be a noisy link or problems with the near-end Processor Interface circuit pack or with the far-end. 1. See “DS1-BD” for DS1 Interface circuit pack problems. 2. See “PI-LINK”.

Continued on next page

Table 10-463. TEST #233 Link Quality Test — *Continued*

Error Code	Test Result	Description/Recommendation
16387	FAIL	Excessive Level 2 resets and excessive Level 2 I-frame retransmission.
16389	FAIL	Excessive Level 2 resets and excessive LAPD invalid frame errors.
16390	FAIL	Excessive Level 2 I-frame retransmissions and excessive LAPD invalid frame errors.
16391	FAIL	Excessive Level 2 I-frame retransmissions, excessive LAPD invalid frame errors, and excessive Level 2 resets. 1. See PI-LINK (Processor Interface Link) Maintenance documentation for this maintenance object.
16392	FAIL	HDLC receive rate exceeded the threshold.
16400	FAIL	HDLC transmit rate exceeded the threshold.
16393-16425	FAIL	Other combinations of above individual failures can be calculated as follows: 16384 = 0X4000 16385 = 0X4001 16386 = 0X4002 16388 = 0X4004 16316 = 0X4010
	PASS	PI-LINK currently does not have any of the above errors.

ISDN Hardware Check Test (#234)

This test checks the status of the ISDN hardware which is the DS1 Interface circuit pack and cabling. Status of the DS1 port is kept by the system. The state of the port can be in-service or out-of-service. This state is updated by DS1 Interface circuit pack maintenance. If DS1 maintenance detects a problem with the physical medium near-end or far-end, the Processor Interface Link maintenance is instructed to restart the link. Therefore, if this test fails, the port is considered out-of-service and the link cannot be brought up until DS1 maintenance changes the state to in-service. This is more of a status inquiry than a test. Thus, the only recovery procedure is to refer to DS1-BD (DS1 Trunk Circuit Pack) Maintenance documentation.

Table 10-464. TEST #234 ISDN Hardware Check Test

Error Code	Test Result	Description/Recommendation
	ABORT	Internal system error 1. Retry the test at 1-minute intervals a maximum of 5 times.
1005	ABORT	This test only runs for ISDN-PRI links. This link is a BX.25 link and, thus, aborts.
	FAIL	Indicates that there is a physical problem with the DS1 facility link. 1. Cross-reference DS1 Interface circuit pack errors for possible reason. Refer to “DS1-BD”. 2. Retry the test. It continues to fail until the DS1 problem is cleared up.
	PASS	DS1 facility is functioning correctly.

PI-PT (Processor Interface Port)

MO Name (in Alarm Log)	Alarm Level	Initial Command to Run[1]	Full Name of MO
PI-PT	MAJOR	test interface PCS sh	Processor Interface Port
PI-PT	WARNING	release data-module <ext>	Processor Interface Port

1 Where P is the port network number (1 for PPN only); C is the carrier designation (for example, A or B for processor complex circuit packs); and S is the address of the slot in the carrier where the circuit pack is located (for example, 1 or 2 for either the first or second Processor Interface circuit packs).

PI-PT is the physical port on the TN765 Processor Interface circuit pack. If the Processor Interface Link (PI LINK) MO raises an alarm that can be correlated to an on-board port problem, then PI-PT is alarmed. In a system without High or Critical Reliability, there are no tests that run directly on Processor Interface port. The PI-LINK MO is responsible for the testing of the TN765 ports along with DCS links, AUDIX links, ISDN links, etc. Refer to the PI-LINK (Processor Interface Link) Maintenance documentation for details. In a High or Critical Reliability system, Processor Interface port is used to test the ports on the Standby Processor Interface circuit packs. If the test fails, a Major alarm is raised. More importantly, if a software requested SPE-interchange takes place and an alarm is raised on the Processor Interface port, then the interchange may abort due to alarm severities.

Error Log Entries and Test to Clear Values

Table 10-465. Processor Interface Port PI-PT Error Log Entries

Error Type	Aux Data	Associated Test	Alarm Level	On/Off Board	Test to Clear Value
0[1]	0	Any	Any	Any	test interface PCS sh r 1
1		Standby PI Port Test (#404)	MAJOR	ON	test interface PCS sh
18	0	busyout data-module <ext>	WARNING	OFF	release data-module <ext>
123 (a)	Any	None	MAJOR	ON	test link lnk-no
130 (b)		None			
257 (a)	Any	None	MAJOR	ON	test link lnk-no l

1 Run the Short Test Sequence first. If all tests pass, run the Long Test Sequence. Refer to the appropriate test description and follow the recommended procedures.

Notes:

a. PI-LINK raised this alarm against PI-PT. The Processor Interface Loop Around test failed on one of the ports. Refer to PI-LINK Maintenance documentation for details on resolving this alarm. If this error resulted in an SPE-interchange, then issue the **test interface PCS sh** command on the Standby Processor Interface to try to resolve the alarm.

b. This error type indicates that the circuit pack has been removed or has been insane for more than 11 minutes. To clear the error, reinsert or replace the circuit pack.

System Technician-Demanded Tests: Descriptions and Error Codes

PI-PT can be tested by issuing the **test interface PCS** command on the Standby Processor Interface circuit pack. If the Active TN765 Processor Interface circuit pack is tested, then the active test sequence is run (**which is DESTRUCTIVE**). [Refer to PI-SCI (System Communication Interface) Maintenance documentation for details on these tests]. Only the Standby Processor Interface test sequence runs tests directly on PI-PT.

Always investigate tests in the order presented in the table below when inspecting errors in the system. By clearing error codes associated with the *Standby Processor Interface Port Test*, for example, you may also clear errors generated from other tests in the testing sequence.

Table 10-466. System Technician-Demanded Tests: PI-PT Standby Processor Interface

Order of Investigation	Short Test Sequence	Long Test Sequence	D/ND[1]
NPE Audit Test (#50) (a)		X	ND
Control Channel Loop Around Test (#52) (a)	X	X	ND
Standby Processor Interface Circuit Pack Test (#423) (b)	X	X	ND
Standby Processor Interface Port Test (#404)	X	X	ND

1 D = Destructive, ND = Non-destructive

Notes:

a. Refer to “XXX-BD (Common Port Circuit Pack)” for information about these tests.

b. Refer to “PI-BD” for information about this test.

Table 10-467. System Technician-Demanded Tests: PI-PT Active Processor Interface

Order of Investigation	Short Test Sequence	Long Test Sequence	D/ND[1]
SCI Start (#176) (a)		X	D
SCI Self Test (#231) (a)	X	X	ND
NPE Audit Test (#50) (b)		X	ND
Control Channel Loop Around Test (#52) (b)	X	X	ND

1 D = Destructive, ND = Non-destructive

Notes:

a. Refer to the “PI-SCI” for information about these tests.

b. Refer to “XXX-BD (Common Port Circuit Pack)” for information about these tests.

Standby Processor Interface Port Test (#404)

This test is the same as Test #182 in the Processor Interface Link (PI-LINK) Maintenance documentation. However, this test only runs on the Standby Processor Interface circuit pack. It is an on-board loop around test. This test checks the health of physical port on the circuit pack. If the test fails, then a Major alarm is raised on the circuit pack. When the circuit pack is put into local loop around mode, frames are looped internally on the circuit pack. If the test fails, the Processor Interface circuit pack reports the failure. It is a good check of most of the working hardware on the Processor Interface circuit pack.

Table 10-468. TEST #404 Standby Processor Interface Port Test

Error Code	Test Result	Description/Recommendation
2 9 16 80 84 85 93 94 102	ABORT	Internal system error 1. Retry the command at 1-minute intervals a maximum of 5 times.
1124	ABORT	The PI link for this port is currently disabled. This test does not run on disabled PI links. 1. Retry this test if the PI link is re-enabled. Enter the **display communication-interface link** command to verify that this link has been disabled.
1125	ABORT	The Processor Interface Loop Around Test on this port could not be executed since the Processor Interface circuit pack is not in the correct state. 1. Check PI-BD for possible errors and resolve them first. 2. Rerun the **test interface PCS sh** command. 3. If the test continues to abort while the PI-BD Test (#423) passes, escalate the problem.

Continued on next page

Table 10-468. TEST #404 Standby Processor Interface Port Test — *Continued*

Error Code	Test Result	Description/Recommendation
1029 1030 2011 2012 2013 2014 2015 2016 2017 2018 2019 2020 2021 2022 2023 2024 2025 2051	ABORT	Refer to the STBY-SPE Maintenance documentation for a description of these error codes.
12	FAIL	Processor Interface circuit pack reported that the Loop Around Test failed. 1. Retry the test. If the test continues to fail, try resetting the circuit pack via the **reset interface PCS** command. 2. If test continues to fail, replace the TN765 circuit pack. Refer to Chapter 6, ''Reliability Systems: A Maintenance Aid'' for instructions on how to replace an SPE complex circuit pack.
	PASS	TN765 Processor Interface Circuit Pack Loop Around Test passed. The hardware associated with this port is functioning properly.

PI-SCI (System Communication Interface)

MO Name (in Alarm Log)	Alarm Level	Initial Command to Run[1]	Full Name of MO
PI-SCI[2]	MAJOR	test interface PCS	System Communication Interface

1 Where P is the port network number (1 for PPN only); C is the carrier designation (for example, A or B for processor complex circuit packs); and S is the address of the slot in the carrier where the circuit pack is located (for example, 1 or 2 for Processor Interface circuit packs 1 or 2).

2 For additional repair information, see also PI-BD (Processor Interface Circuit Pack) Maintenance documentation.

WARNING:
The "test interface long" command resets the PI-BD and causes all ISDN-PRI and BX.25 links to come down.

The PI-SCI (System Communication Interface) MO is used to put the TN765 Processor Interface circuit pack into a state such that BX.25 (DCS, AUDIX, etc.) and ISDN links can be established. The TN765 Processor Interface circuit pack has downloadable firmware. It is the responsibility of PI-SCI to download the firmware to the TN765 circuit pack during initialization. Failures while communicating with the TN765 circuit pack are logged against the PI-SCI MO. There can be up to two SCIs. There is a one-to-one correlation of PI-SCI to Processor Interface circuit packs. In a High or Critical Reliability system, there can be four Processor Interface circuit packs, but only two on the same carrier are active at any one time. If errors against the SCI can be related to the Processor Interface circuit pack, then the circuit pack MO is alarmed (PI-BD). See also PI-LINK (Processor Interface Link) and PI-BD (Processor Interface Circuit Pack) Maintenance documentation.

When investigating BX.25 (DCS, AUDIX, etc.) and ISDN link problems, resolve PI-SCI errors initially, since they might clear up the Processor Interface link problems.

Error Log Entries and Test to Clear Values

Table 10-469. PI-SCI System Communication Interface Error Log Entries

Error Type	Aux Data	Associated Test	Alarm Level	On/ Off Board	Test to Clear Value
0[1]	0	Any	Any	Any	test interface PCS sh r 1
1 (a)	2055 2056 2057 2058	none	none	none	none
257 (b)	Any	none	MAJOR	ON	test interface PCS l[2]
769 (c)	Any	none	MAJOR/ WARNING[3]	OFF	test interface PCS l[2]
1025 (d)	Any	none	MAJOR/ WARNING[3]	OFF	test interface PCS l[2]
1281 (e)	Any	Sci Start Test (#176)	MAJOR/ WARNING[3]	OFF	test interface PCS l[2]
1793 (f)	Any	none	MAJOR	ON	test interface PCS l[2]
2049 (g)	90xx	Sci Start Test (#176)	MAJOR	ON	test interface PCS l[2]
2305 (f)	Any	Sci Self Test (#231)	MAJOR	ON	test interface PCS sh r 2
2561 (h)	Any	none	MAJOR/ WARNING[3]	OFF	test interface PCS l[2]
2817 (i)	Any	none	MAJOR/ WARNING[3]	OFF	test interface PCS l[2]
2818 (j)	Any	none	MAJOR/ WARNING[3]	OFF	test interface PCS l[2]
3073 (f)	Any	none	MAJOR/ WARNING[3]	OFF	test interface PCS l[2]

1 Run the Short Test Sequence first. If all tests pass, run the Long Test Sequence. Refer to the appropriate test description and follow the recommended procedures.

2 See WARNING below.

WARNING:
The "test interface long" command resets the PI-BD and causes all ISDN-PRI and BX.25 links to come down.

3 Major alarms may be downgraded to Warning alarms based on the value used in the **set options** command.

Notes:

a. An error occurred during a hot start processor element interchange that caused the associated Processor Interface links (BX.25 and/or ISDN-PRI) to go down temporarily. If these errors reoccur and there are no other errors against PI-BD or PI-SCI, resolve the other alarm first.

2055	The checksum of the PI memory was not able to be retrieved.
2056	The PI was not able to be put into a stable state such that the switch to the new active PI failed to keep the existing PI links up.
2057	The active PI was unable to copy the image of its memory to the standby PI.
2058	System software error.

b. This error indicates a possible hardware failure on the TN765 Processor Interface circuit pack. If the error persists, and the SCI is unstable (resets often), type in **test interface PCS long** command. The Processor Interface firmware is redownloaded if the checksum fails. If the problem still exists, automatically redownload the Processor Interface firmware by typing **reset interface PCS**. If this doesn't work, then replace the TN765 Processor Interface circuit pack. These errors also raise alarms against the PI-BD (Processor Interface Circuit Pack).

NOTE:
To replace an SPE complex circuit pack in a Duplication Option System follow the procedures in Chapter 6, ''Reliability Systems: A Maintenance Aid''. For a Non-Duplication Option System follow procedures in Chapter 5, ''Routine Maintenance Procedures'' for instructions on how to replace the Processor circuit pack (TN786 or TN2404/TN790).

Use the following steps for G3i-386 and later systems where the Processor Interface firmware resides in the flash ROM memory in the Processor circuit pack (i.e. TN786 or TN2404/TN790) instead of Tape as in G3i-286. If the firmware can't be successfully downloaded into the Processor Interface circuit pack after entering the "reset interface PCS" command, then use the following steps:

1. Replace the TN765 Processor Interface circuit pack:
2. After the new TN765 Processor Interface circuit pack has been inserted successfully, enter "test interface PCS long" command to verify the results of tests.

   If the error still indicates the failure for downloading the firmware into Processor Interface circuit pack, then it's possible that the firmware stored in the Processor circuit pack (TN786 or TN2404/TN790) is corrupted.

3. Follow the Chapter 5, ‘‘Routine Maintenance Procedures’’ Software Upgrade procedure to load the system software from the Memory Card with the correct software release number.

   After the system software is successfully loaded into Processor circuit pack, boot the system up with the customer translation memory card in slot.

   If the failure for downloading the firmware into Processor Interface circuit pack persists after the system reboot, it's possible that the flash ROM chips in Processor circuit pack (TN786 or TN2404/TN790) may be defective.

4. Replace the Processor circuit pack and repeat the step (3) to load the system software into the Processor circuit pack.

   NOTE:
   If you replace the Processor circuit pack, you need to obtain a new license file.

5. Boot the system up again.

   If the failure for downloading the firmware into Processor Interface circuit pack persists after the system reboot, it's possible that the M-BUS at the backplane of control carrier may be defective. Replace the control carrier.

c. Error while communicating with TN765 circuit pack. The software lost handshake with the Processor Interface circuit pack. See Note (b) for recovery.

d. Error while communicating with TN765 circuit pack. See Note (b) for recovery. This error can also be caused by line problems. Investigate possible transmission errors or noise on the associated line.

e. An Aux Data value of 23 indicates that the software failed to open the tape in order to download the Processor Interface firmware. Check if the tape is currently in use (that is, if it is spinning or if the yellow LED is on). When the tape is idle, reissue the **test interface PCS long** command. If the test still fails or if the Aux Data value was other than 23, then refer to Test #176 (Sci Start Test) for details on recovery. For all other Aux Data values, reissue the **test interface PCS long** command, and refer to Test #176 (SCI Start Test) for details on recovery.

   NOTE:
   For G3i-386 and later, see Note (b) for recovery.

f. Error while communicating with TN765 circuit pack. See Note (b) for recovery. These errors also raise alarms against the PI-BD (Processor Interface Circuit Pack).

g. Download of Processor Interface firmware failed. If this error persists, then replace the TN765 Processor Interface circuit pack. This error also raises an alarm against PI-BD if the threshold is reached.

h. An audit of the firmware failed. If BX.25 and ISDN links are still up, no action is needed. If Processor Interface circuit pack is reset continuously, recover as in Note (b).

i. Error while communicating with TN765 Processor Interface circuit pack. See Note (b) for recovery. System software problem internal to the process that monitors Processor Interface link activity. Escalate the problem if error causes the Processor Interface to be reset (loss of service is noticed).

j. This error indicates that the TN765 Processor Interface circuit pack did not clear up the overload condition within one minute of logging the initial 2817 error (overload detected). The circuit pack was reset and all Processor Interface links on that circuit pack were also reset.

Short and Long Test Sequences

The SCI and Processor Interface circuit pack are both tested via the same system technician command. The system technician command is **test interface PCS l** or **sh** where PCS is an active Processor Interface circuit pack.

WARNING:
The "test interface long" command resets the PI-BD and causes all ISDN-PRI and BX.25 links to come down.

For information about testing the Standby Processor Interface circuit pack, see PI-BD Maintenance documentation. If the Active Processor Interface has no enabled links (see Communication-Interface Links Form in Chapter 8, "Maintenance Commands and Trouble-Clearing Aids", only XXX-BD (Common Port Circuit Pack) tests execute.

System Technician Demanded Tests: Descriptions and Error Codes

Always investigate tests in the order presented in the table below when inspecting errors in the system. By clearing error codes associated with the *SCI Start Test,* for example, you may also clear errors generated from other tests in the testing sequence.

Order of Investigation	Short Test Sequence	Long Test Sequence	D/ND[1]
SCI Start Test (#176)		X	D
SCI Self Test (#231)	X	X	ND
Control Channel Loop Test (#52) (a)	X	X	ND
NPE Audit Test (#50) (a)		X	ND

1 D = Destructive; ND = Nondestructive

a. For information about these tests, refer to the XXX-BD (Common Port Circuit Pack) Maintenance documentation. These tests are run on the PI-BD (Processor Interface Circuit Pack) Maintenance object.

SCI Start Test (#176)

This test is destructive.

This test restarts the System Communication Interface. This implies all BX.25 (DCS, AUDIX, mis, etc.) and ISDN links are restarted. The checksum of the downloadable firmware is tested. If the checksum fails, the firmware is redownloaded from tape. If it passes, SCI Start completes and the associated BX.25 and ISDN Links are started up. If a circuit pack needs to be replaced, refer to Chapter 6, ''Reliability Systems: A Maintenance Aid'' for instructions on replacing an SPE circuit pack.

The Processor Interface circuit pack firmware is downloaded from the flash ROM memory of Processor circuit pack. If the checksum test fails, then the firmware is re-downloaded again from Processor circuit pack. If it passes, SCI Start completes and the associated BX.25 and ISDN links are started up. If the checksum failure persists, refer the footnote (b) of Hardware Error Table for repair procedure.

Table 10-470. TEST #176 SCI Start Test

Error Code	Test Result	Description/Recommendation
9 10	ABORT	Internal system error 1. Retry the command at 1-minute intervals a maximum of 5 times.
1	FAIL	Could not reset the Processor Interface circuit pack. 1. Wait one minute, and retry the command. 2. If test continues to fail, replace TN765 Processor Interface circuit pack. Refer to Chapter 6, ''Reliability Systems: A Maintenance Aid'' for instructions on how to replace an SPE complex circuit pack.
16 80 94 102	FAIL	Internal system error 1. Retry the command at 1-minute intervals a maximum of 5 times. 2. If problem still exists, redownload firmware using the **reset interface** command. 3. See note (b) of Hardware Error Table for repair procedure.

Continued on next page

Table 10-470. TEST #176 SCI Start Test — *Continued*

Error Code	Test Result	Description/Recommendation
200	FAIL	Checksum of Processor Interface failed. 1. Wait 1 minute and retry. 2. If the test continues to fail with a checksum failure, there could be corruption on the tape. Replace the tape with a new tape that contains Processor Interface firmware. Retry the command. For G3i-386 and later, see note (b) of Hardware Error Table for repair procedure. 3. In G3i-286 if the problem continues to exist after replacing the tape, then replace the TN765 Processor Interface circuit pack. Refer to Chapter 6, ''Reliability Systems: A Maintenance Aid'' for instructions about replacing an SPE complex circuit pack. Retry the command.
23 199 9000s	FAIL	Processor Interface Download failed. Refer to TABLE A Tape Unit Aux Data Table and follow the repair recommendations. 1. Wait one minute and retry. See note (b) of Hardware Error Table for repair procedure 2. If problem persists and TAPE is idle when command is entered, then a problem may exist in either the TAPE or the Processor Interface circuit pack. Replace the tape with a new tape that contains Processor Interface firmware. Retry the command.
	PASS	TN765 Processor Interface circuit pack initialized correctly. Processor Interface links (BX.25 and ISDN) should recover now. See PI-LINK for more information if links do not recover.

SCI SELF TEST Test (#231)

This is an on-board test which checks the basic functionality of the TN765 circuit pack. This test runs in the background periodically, or it can be invoked via the **test interface PCS** command. If this test continuously fails, then replace the TN765 Processor Interface circuit pack. Refer to Chapter 6, ''Reliability Systems: A Maintenance Aid'' for instructions on how to replace an SPE complex circuit pack.

Table 10-471. TEST #231 SCI Self Test

Error Code	Test Result	Description/Recommendation
11	ABORT	Internal system error 1. Retry the command at 1-minute intervals a maximum of 5 times.
13	ABORT	The TN765 PI circuit pack has not been reset yet or is currently being reset. 1. Retry the command at 1-minute intervals a maximum of 5 times. 2. If the test continues to abort with error code 13, then reset the TN765 via “test interface PCS long”. **CAUTION:** *Resetting the TN765 will cause all BX.25 (Audix, cms, etc.) and ISDN-PRI links to be briefly torn down.* 3. If TN765 fails to be reset, refer to test 176 section description.
4xxx	FAIL	Hardware on the TN765 Processor Interface failed. 1. 4000 - Assigned data link hardware failure. 2. 4001 - Unassigned data link hardware failure. 3. 4002 - CPU function test failed - hardware failure. 4. 4003 - Local Processor Interface RAM memory test failed - hardware failure. 5. 4004 - Local EPROM memory test failed - hardware failure. 6. For all of the above errors, retry the test. If it fails again, the Communication Interface should be restarted. Type in a **reset interface** command. If the reset is successful, retry the **test interface** command. If Test #231 still fails with error codes other than 4001, then replace TN765 Processor Interface circuit pack. Refer to Chapter 6, ‘‘Reliability Systems: A Maintenance Aid’’ for instructions on how to replace an SPE complex circuit pack. If test fails with Error Code 4001, then an on-board failure is associated with a non-used port on Processor Interface circuit pack. TN765 circuit pack should be replaced if this port will be used in the future.
	PASS	TN765 Processor Interface circuit pack passed self-test. On-board hardware is functioning correctly.

PKT-BUS (Packet Bus)

MO Name (in Alarm Log)	Alarm Level	Initial Command to Run[1]	Full Name of MO
PKT-BUS	MAJOR	test pkt P l r 2	Packet Bus
PKT-BUS	MINOR	test pkt P l	Packet Bus
PKT-BUS	WARNING	test pkt P l	Packet Bus

1 Where P is an appropriate port network number determined from the PORT field on the Alarm or Error Log.

The Packet Bus consists of a single bus, and one such bus appears in each port network. The Packet Bus in each port network is physically independent. Therefore, there is one instance of the Packet Bus maintenance object for each port network.

In DEFINITY, the Packet Bus is used to carry ISDN-BRI, ISDN-PRI, and ASAI signaling information. *In pre-R7si systems*, the SPE interface to the Packet Bus is the TN778 Packet Control circuit pack (PKT-CTRL). Packet Bus maintenance is performed only when the Packet Bus is enabled on the Maintenance-Related System Parameters form. *In R7si and later systems*, the SPE interface to the Packet Bus is the *second* instance of the Packet Interface (PKT-INT 1A2) on the TN2401/TN794 NetPkt circuit pack. Packet Bus maintenance is always performed, since the Packet Bus is enabled automatically at system boot.

Packet Bus testing is dependent on the following hardware components:

- TN771 Maintenance/Test circuit pack, M/T-PKT port
- TN778 Packet Control Circuit Pack (PKT-CTRL) for pre-R7si systems
- TN2401/TN794 NetPkt Circuit Pack, Packet Interface 1A2 (PKT-INT) for R7si and later systems
- TN570 Expansion Interface circuit pack (EXP-INTF)
- ISDN-BRI circuit packs (BRI-BD), C-LAN circuit packs (CLAN-BD), and other circuit packs with Packet Bus interfaces.

Packet Bus tests may abort if some of this hardware is not present in the system. Also, these tests may yield inconsistent results if some of this hardware is defective.

The interactions between the Packet Bus and the circuit packs that use the bus are complex. For this reason, the Packet Bus can be alarmed due to a circuit pack failure and, conversely, circuit packs can be alarmed due to a Packet Bus failure. This section on PKT-BUS is limited to a description of the Error and Alarm Log entries for the Packet Bus maintenance object and to a description of the Packet Bus test sequence.

NOTE:
Refer to Chapter 9, ''Packet Bus Fault Isolation and Correction'' for a complete discussion of Packet Bus maintenance and also the interactions of the bus with the Packet circuit packs. The chapter discusses fault isolation and correction procedures, and it should be referenced for all procedures and required decisions. The "Packet Bus Fault Isolation Flowchart" section of the chapter is the normal starting point for experienced technicians; however, technicians who are unfamiliar with the Packet Bus and its use should refer to the introductory material.

A failure of one or more circuit packs that use the Packet Bus can cause a Packet Bus alarm. In addition, a Packet Bus failure can cause loss of service to one or more such circuit packs, as well as to the ports and endpoints associated with the ISDN-BRI circuit pack (BRI-PORT, ABRI-PORT, BRI-SET, BRI-DAT, and ASAI-ADJ). These interactions are discussed in the "Circuit Packs That Use the Packet Bus" section of the chapter referenced in the note above.

The following list summarizes some of the important points to consider when working with the Packet Bus.

- The Maintenance/Test circuit pack (TN771) is a critical tool for isolating Packet Bus faults. This circuit pack is present in each port network of a critical reliability system that is using the Packet Bus. In high availability and standard systems, the circuit pack may be included as a customer option. If a TN771 is not present, **one must be taken to the customer site** to allow for proper fault isolation. (A determination as to whether a TN771 circuit pack is in the system is made by entering the **list configuration** command.) Use of the Maintenance/Test Packet Bus port facilities is described under "The Maintenance/Test Circuit Pack (TN771)" in the above referenced chapter. Also, in the same chapter, the section entitled "Special Precautions Concerning the TN771" describes other circumstances when a TN771 must be taken to the customer site.
- Certain catastrophic failures of a Packet Bus can cause all the Packet circuit packs on that bus to report errors, thus generating a high volume of maintenance activity for maintenance objects that are healthy. In order to reduce this unnecessary activity, some maintenance for Packet circuit packs, ports, and endpoints is curtailed or disabled when such a catastrophic Packet Bus failure is suspected. The following list summarizes the error-logging and testing impact of this strategy:

e. In-line errors indicating possible Packet Bus failures are placed into the error log, but are *not* acted upon. *Circuit pack* maintenance objects thus affected include:

   - BRI-BD
   - LGATE-BD
   - ASAI-BD
   - TBRI-BD
   - PGATE-BD
   - CLAN-BD
   - UDS1-BD
   - MAPD-BD
   - MEDPRO

f. In-line errors indicating possible Packet Bus failures **are neither placed into the error log nor acted upon**. Circuit pack *port* and *endpoint* maintenance objects thus affected include:

   - BRI-PORT, ABRI-PORT, BRI-SET, TBRI-PT
   - ASAI-ADJ, ASAI-PT, ASAI-EPT
   - ATT-PORT, ATT-ADJ, ATTE-PT, ATTE-AJ
   - LGATE-PT, LGATE-AJ
   - PGATE-PT
   - ETH-PT
   - PPP-PT
   - MEDPRO-RES

g. Circuit pack and port in-line errors that are not relevant to the Packet Bus or that indicate a circuit pack failure are acted upon in the normal fashion.

h. Normal background maintenance (periodic and scheduled) is not affected.

i. Foreground maintenance (for example, commands executed on the Manager I terminal) is not affected.

The actions in the previous list serve to reduce the system load, which could become excessive if too many maintenance objects are affected by a Packet Bus failure. However, such an excessive load should in no way impede the isolation and the correction of the faults.

When the actions in the list are implemented, Error Type 3329 is logged against PKT-BUS, and a Warning alarm is raised (although other Packet Bus errors in many cases raise more severe alarms, thereby overriding the Warning alarm).

- A Packet Bus failure in the Processor Port Network (PPN) causes Packet traffic (ISDN-BRI, ASAI) in the Expansion Port Networks (EPNs) to fail, even though there is no Packet Bus failure in the EPN. This is true because all Packet traffic requires communication with the Packet Interface 1A2 on the NetPkt circuit pack (R7si and later systems) or the Packet Control (PKT-CTRL) circuit pack (pre-R7si systems) in the PPN. Due to this requirement, a PPN Packet Bus failure must be investigated first whenever Packet Bus failures occur in multiple port networks.

Error Log Entries and Test to Clear Values

Table 10-472. PKT-BUS Error Log Entries

Error Type	Aux Data	Associated Test	Alarm Level	On/Off Board	Test to Clear Value
0[1]	0	Any	Any	Any	test pkt
1 (a)	1-2	Packet Circuit Pack Audit Test (#570)	MAJOR	ON	test pkt P l r 2
257** (b)	Any	Packet Control Bus Loop Around Test (#571)	MAJOR	ON	test pkt P l r 2
513 (c)	1-24	Maintenance/Test Circuit Pack Query Test (#572)	MAJOR	ON	test pkt P l r 2
1793 (d)	Any	none			
2049 (e)	1-3	Maintenance/Test Circuit Pack Query Test (#572)	MINOR	ON	test pkt P l r 2
2305 (f)	1-24	Maintenance/Test Circuit Pack Query Test (#572)			test pkt P l
3329 (g)	1-7 or 1000-1007	none	WARNING	ON	test pkt P l
3585 (h)	Any	none	MINOR	ON	test pkt P l
3841 (i)	Any	none	MINOR	OFF	

1 Run the Short Test Sequence first. If all tests pass, run the Long Test Sequence. Refer to the appropriate test description and follow the recommended procedures.

**} This error can occur only in pre-R7si systems.

NOTE:
For PKT-BUS, an ON-BOARD alarm indicates a problem with the Packet Bus itself.

Notes:

a. Within the last minute, packet circuit packs have reported errors that indicate a possible Packet Bus failure. The Aux Data value is 1 or 2, indicating that only one or more than one Packet circuit pack (respectively) have reported a possible Packet Bus failure.

b. Packet Bus maintenance has been unable to perform loop around tests from the TN778 Packet Control circuit pack (PKT-CTRL) to itself. This could indicate faults on the Packet Control circuit pack rather than on the Packet Bus. Examine the Error and Alarm Logs for any such errors. This error can occur only on pre-R7si systems.

c. The Maintenance/Test Packet Bus port for this port network has determined that there are more Packet Bus faults than the port can correct. The Aux Data value indicates the number of faulty leads.

d. Packet circuit packs have detected possible Packet Bus failures via in-line error or background test failure. Examine the Error and Alarm logs for more specific PKT-BUS errors.

e. The Maintenance/Test Packet Bus port has caused Packet Bus leads to be swapped to spare leads. This error appears only in a Critical Reliability system. The Aux Data value indicates the number of faulty leads. If this is the only active error against the Packet Bus, **the Packet Bus is still in service**. Therefore, due to the disruptive nature of the Packet Bus Fault Isolation and Correction procedures, repairs should be deferred until a time when these procedures cause the least interruption in service. This matter is resolved via consultation with the customer. However, be sure not to delay repairs for too long, since the switch is not able to recover from another Packet Bus failure until the existing one is resolved. Use the procedure described in ''Special Precaution Concerning the TN771'' on page 9-18 to ensure that the Maintenance/Test is giving correct information. This procedure may require that a new TN771 be taken to the customer site.

f. The Maintenance/Test Packet Bus port has detected open leads on the Packet Bus. The Aux Data value indicates the number of open leads.

g. Packet circuit pack, port, and endpoint maintenance has been disabled due to a Packet Bus failure. The Aux Data value indicates which sources have reported errors that have caused maintenance to be disabled. These sources include the following:

- In-line errors from Packet circuit packs.
- Packet Bus Uncorrectable report from the Maintenance/Test Packet Bus port.
- Packet Bus Interface Failure report from the Packet Control. (pre-R7si systems only)
- In an EPN, packet circuit pack, port, and endpoint maintenance will be disabled if a Packet Bus failure occurs in the PPN.

The Aux Data values that indicate these sources are identified in the following table:

Aux Data	Packet Circuit Pack	Maint/Test Circuit Pack	Packet Control
1/1001	X		
2/1002		X	
3/1003	X	X	
4/1004			X
5/1005	X		X
6/1006		X	X
7/1007	X	X	X

If the Aux Data value is in the range 1000-1007, then Packet circuit pack, port, and endpoint maintenance has been disabled in the EPN due to a PPN Packet Bus failure. If the value is greater than 1000, then there is also a failure of the packet Bus in this EPN and the source of the other information can be determined from the table above.

NOTE:
It is important to remember that problems reported by Packet circuit packs may be caused by **any** circuit pack. However, only Packet circuit packs can detect such problems (inasmuch as TDM-only circuit packs are not affected by these problems).

h. Packet circuit pack, port, and endpoint maintenance has been disabled due to more than one circuit pack reporting in-line errors. If this occurs more than three times in 15 minutes (that is, if maintenance is disabled due to errors and then re-enabled because no more errors are reported), a Minor alarm is raised against the Packet Bus. Note that this error may still be present in the error log even if the “Circuit Pack Audit Test” reports that only one circuit pack has indicated a problem. This occurs if more than one circuit pack reported errors with in any one minute interval since the Packet Bus fault occurred.

NOTE:
Because alarms against a Maintenance Object are not resolved until all alarming has been cleared, an alarm due to a missing Maintenance/Test Packet Bus must be cleared by installing a Maintenance/Test circuit pack before it can be determined if other Packet Bus alarms have been resolved.

i. The Maintenance/Test Packet Bus port for this port network is not in service. This error appears only in a Critical Reliability system, and it can occur in the following cases:

- The Packet Bus port has been busied out (indicated by an Error Type 18), and a Warning alarm is active in the same port network. Release the port by entering the **release port PCSS04** command.
- The Packet Bus port has failed. Resolve any alarms.
- The Maintenance/Test circuit pack was not recognized by the system at the last system restart. Replace the Maintenance/Test circuit pack. There is no Maintenance/Test circuit pack installed in this port network. One must be installed.

System Technician-Demanded Tests: Descriptions and Error Codes

Always investigate tests in the order presented in the following tables when you are inspecting errors in the system. By clearing error codes associated with the *Packet Circuit Pack Audit Test,* for example, you may also clear errors generated from other tests in the testing sequence.

Order of Investigation	Short Test Sequence	Long Test Sequence	D/ ND[1]
Packet Circuit Pack Audit Test (#573)	X	X	ND
Maintenance/Test Circuit Pack Query Test (#572)	X	X	ND
Packet Control Bus Loop Around Test (#571)**	X	X	ND

1 D = Destructive; ND = Nondestructive

**} This test is only available in pre-R7si systems.

Packet Control Bus Loop Around Test (#571)

This test uses circuitry on the Packet Control circuit pack (TN778) to look for faults on the Packet Bus. If the Packet Control circuit pack has detected parity errors on the Packet Bus, or if it is unable to loop back data to itself, the test fails. The test passes if no parity errors are detected and if data is successfully looped back.

This test provides information only for the PPN of a standard system. If the test is run in an EPN or in the PPN of a High or Critical Reliability system, the test aborts.

This test is available only in pre-R7si systems.

Table 10-473. Test #571 Packet Control Bus Loop Around Test

Error Code	Test Result	Description/Recommendation
1022	ABORT	No Packet Control circuit pack exists in this port network. 1. This test gives information only for the PPN. Ignore results from this test whenever it is run in other port networks.
1024	ABORT	The Packet Control circuit pack is in use by Packet Control maintenance at this time. The test cannot be completed until the Packet Control circuit pack becomes available. 1. Wait for Packet Control maintenance to finish using the Packet Control circuit pack. (The green LED goes out.) 2. Re-enter the command.
1141	ABORT	The Packet Control circuit pack is out-of-service. 1. Determine if the Packet Control circuit pack is busied out (this is indicated by an Error Type 18 logged against PKT-CTRL). If the pack is busied out, release the pack by entering the **release packet-control** command. Then re-enter the command. 2. If the Packet Control circuit pack is NOT busied out, refer to PKT-CTRL Maintenance documentation for recommended repair procedures.
1143	ABORT	This test is run only in high or critical reliability systems. 1. Ignore results from this test when it is run in a high or critical reliability system.
2000	ABORT	The test timed-out while waiting for the packet to be returned from the loop around. 1. Re-enter the command at 1-minute intervals a maximum of 5 times. 2. If the test continues to abort, check for problems with the Packet Control (look for PKT-CTRL errors in the Error and Alarm Logs).
2076	ABORT	The parity error check circuitry on the Packet Control circuit pack is not functioning correctly. 1. Run the test again. 2. If the same abort occurs again, refer to PKT-CTRL to attempt to correct the fault.

Continued on next page

Table 10-473. Test #571 Packet Control Bus Loop Around Test — *Continued*

Error Code	Test Result	Description/Recommendation
2060	ABORT	The link on the Packet Bus that is being used to perform the test has failed. 1. Retry the command at 1-minute intervals a maximum of 5 times. 2. If the test continues to abort, check for problems with the Packet Control (look for PKT-CTRL error in the Error and Alarm Logs).
2100	ABORT	Maintenance could not allocate all of the necessary system resources to perform this test.
2500	ABORT	An internal operation failed; the test could not be completed. 1. Retry the command at 1-minute intervals a maximum of 5 times.
1	FAIL	The Packet Control Bus Loop Around Test failed (parity errors were detected from the test packet).
2	FAIL	The Packet Control Bus Loop Around Test failed (the Packet Control circuit pack could not bring up a loop around link on the Packet Bus). 1. Refer to the “Packet Bus Fault Isolation Flowchart” section in Chapter 9 to determine the cause of the test failures.
	PASS	No faults have been detected on the Packet Bus by the Packet Control circuit pack. This indicates that the Packet Bus is operating correctly.

Maintenance/Test Circuit Pack Query Test (#572)

This test queries the Maintenance/Test Packet Bus port about the state of health of the Packet Bus. If the Maintenance/Test circuit pack indicates that the Packet Bus has faults, the test fails. The corresponding failure code describes the severity, type, and number of faults. The test passes if the Packet Bus is fault-free.

NOTE:
A Maintenance/Test circuit pack is usually not present in a Standard system unless the customer has purchased this circuit pack to use for ISDN-PRI test calls, or to enhance the system’s ability to quickly recognize a Packet Bus failure.

Table 10-474. TEST #572 Maintenance/Test Circuit Pack Query Test

Error Code	Test Result	Description/Recommendation
1006	ABORT	The Packet Bus port of the Maintenance/Test circuit pack is out of service. 1. Determine if the port is busied out. If so, release the port by entering the **release port PCSS04** command. Re-enter the test command.
1142	ABORT	No Maintenance/Test circuit pack Packet Bus port is in service in this port network. 1. If this system has Critical Reliability, either (a) the Maintenance/Test circuit pack for this port network has failed, and should be replaced, (b) the Maintenance/Test circuit pack has been busied out, and should be released, or (c) there is no Maintenance/Test circuit pack in this port network, and one must be installed. 2. In a system without Critical Reliability, the Maintenance/Test Packet Bus Port may not be present. If the port is present, and if it is busied out or has failed, release or replace the circuit pack. If there is no Maintenance/Test circuit pack, ignore the results of this test for this port network.
2000	ABORT	The test timed-out while waiting for an uplink CCMS response from the Maintenance/Test Packet Bus port. 1. Retry the command at 1-minute intervals a maximum of 5 times. 2. If the test continues to abort, check for problems with the Maintenance/Test Packet Bus port .
2059	ABORT	The Maintenance/Test Packet Bus port has reported a hardware failure. 1. Re-enter the test command.

Continued on next page

Table 10-474. TEST #572 Maintenance/Test Circuit Pack Query Test — *Continued*

Error Code	Test Result	Description/Recommendation
2077	ABORT	The Maintenance/Test Circuit Pack Query located more than one Maintenance/Test Packet Bus port in the port network. **NOTE:** The software should not allow this to occur. This is an Internal system error. Attempt the following work-around steps. 1. Remove all Maintenance/Test circuit packs from the port network. 2. Insert one Maintenance/Test circuit pack (there should not be more than one in a port network). 3. Re-enter the test command.
2100	ABORT	Maintenance could not allocate all of the necessary system resources to perform this test.
2500	ABORT	An internal operation failed; the test could not be completed. 1. Retry the command at 1-minute intervals a maximum of 5 times.
XYZZ	FAIL	The Maintenance/Test Packet Bus port has detected faults on the Packet Bus. The error code is encoded as follows:
1xxx		The Maintenance/Test Packet Bus port has reconfigured the Packet Bus around the faulty leads. This occurs only in high or critical reliability systems.
2xxx		The Maintenance/Test Packet Bus port is unable to correct all of the Packet Bus faults it has detected.
x0xx		None of the Packet Bus faults are open faults.
x1xx		At least some of the Packet Bus faults are open faults. Look for Error Type 2305 in the Error Log. The Aux Data value indicates the number of open leads.
xxZZ		The last 2 digits of the error code indicate the total number of faulty Packet Bus leads detected by the Maintenance/Test Packet Bus port. 1. Refer to the “Packet Bus Fault Isolation Flowchart” section in Chapter 9 to determine the cause of the failures.
	PASS	No faults have been detected on the Packet Bus by the Maintenance/Test circuit pack. This indicates that the Packet Bus is operating correctly.

Packet Circuit Pack Audit Test (#573)

This test determines whether Packet circuit packs have reported Packet Bus-related in-line errors within the last minute. If so, the failure code indicates whether one or more circuit packs have reported failures within the last minute.

Due to the one minute time constraint included as part of this test, the test is designed to delay 15 seconds before returning a result in cases where the test has failed within the last five minutes. This procedure helps ensure that a repeated sequence of the test does not always yield the same result. If no failure has occurred in the last five minutes, a PASS is returned immediately.

Table 10-475. Test #573 Packet Circuit Pack Audit Test

Error Code	Test Result	Description/Recommendation
2500	ABORT	An internal operation failed; the test could not be completed. 1. Retry the command at 1-minute intervals a maximum of 5 times.
1	FAIL	One Packet circuit pack has reported Packet Bus-related in-line errors within the last minute.
2	FAIL	More than one Packet circuit pack has reported Packet Bus-related in-line errors within that last minute. 1. Refer to the “Packet Bus Fault Isolation Flowchart” section in Chapter 9 to determine the cause of the error reports.
	PASS	No Packet circuit packs have reported Packet Bus-related in-line errors within the last minute. This indicates that the Packet Bus is healthy, or that a Packet Bus fault is transient or is being caused by a faulty Packet circuit pack. If this test passes while there are other signs of a Packet Bus failure (as indicated, for example, in the Error/Alarm Logs or by other test failures), refer to the “Packet Bus Fault Isolation Flowchart” section in Chapter 9 to isolate the problem.

PKT-CTRL (Packet Control Circuit Pack)

MO Name (in Alarm Log)	Alarm Level	Initial Command to Run	Full Name of MO
PKT-CTRL	MAJOR	reset packet-control C[1]	Packet Control Circuit Pack
PKT-CTRL	MINOR	test packet-control C[2]	Packet Control Circuit Pack
PKT-CTRL	WARNING	release packet-control C	Packet Control Circuit Pack

1 If the specified Packet Control circuit pack is in the active SPE, it must first be busied-out via the **busyout packet-control C** command. After testing has completed, the Packet Control circuit pack should be released from the busyout state via the **release packet-control C** command.

2 Where C is the carrier designation (A or B) and should be specified only in a High or Critical Reliability system.

CAUTION:
A detailed flowchart for isolating and resolving Packet Bus faults is included in Chapter 9, "Packet Bus Fault Isolation and Correction". This flowchart, along with the other information presented in the chapter, can help in resolving problems that are not isolated to the Packet Control. Whenever the repair procedures for this Maintenance Object refer to Packet Bus and/or Packet Control maintenance, be sure to reference Chapter 9 in addition to the MO documentation for Packet Bus.

The TN778 Packet Control circuit pack is the hardware component that serves as the interface between the SPE and the Packet Bus. It terminates the Link Access Procedure D (LAPD) protocol and provides support for thousands of signaling links. As shown in Figure 10-83 on page 10-1274, a Packet Control link generally terminates on the Packet Control circuit pack and a packet endpoint which is connected to a Packet circuit pack. An ASAI adjunct is an example of a packet endpoint, and a TN556 is an example of a Packet circuit pack. In G3iV1.1-286 or G3iV2-386, the following Packet circuit packs (packs that can connect to the Packet Bus) are available:

- TN556 ISDN-BRI Line Circuit Pack
- TN570 Expansion Interface Circuit Pack
- TN771 Maintenance/Test Circuit Pack
- TN778 Packet Control Circuit Pack

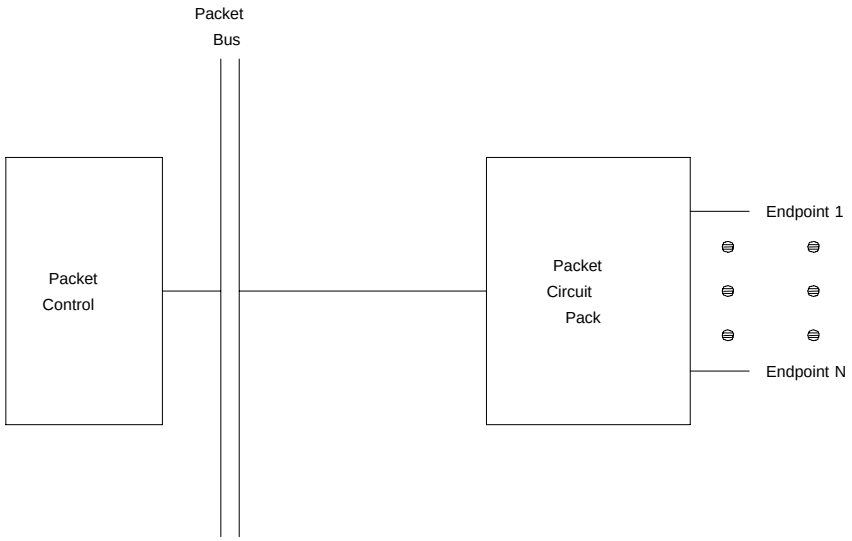

Figure 10-83. Hardware Configuration

The Packet Control circuit pack is not administered in the normal manner; there is no **add** or **remove** command associated with it. However the “Packet Bus Activated?” field on the Maintenance-Related System Parameters Form indicates if the Packet Control circuit pack is “administered.” If the “Packet Bus Activated?” field is set to “yes,” a Packet Control circuit pack should be installed in the system, since the Packet Control circuit pack is required in systems which use the Packet Bus. If a Packet Control circuit pack is not installed, and the “Packet Bus Activated?” field is set to “yes,” a major on-board alarm is raised against the PKT-CTRL MO. This alarm indicates that the Packet Control circuit pack is “missing.” Refer to the “Maintenance-Related System Parameters Form” section in Chapter 5, ‘‘Routine Maintenance Procedures’’ for more information on the “Packet Bus Activated?” field.

Note that the Packet Control circuit pack is listed by the **list configuration all** or **list configuration control** commands only if the Packet Control circuit pack is physically inserted into its slot and the Packet Bus is activated by setting the “Packet Bus Activated?” field to “yes” on the Maintenance-Related System Parameters Form. If the Packet Control circuit pack is physically inserted into its slot but the Packet Bus is not activated, then the Packet Control circuit pack will not appear in the output of the **list configuration all** or **list configuration control** commands.

The **status packet-control C** command provides useful information about the Packet Control circuit pack. This command displays the service state of the circuit pack and various link-related information. The service state “out” indicates that service is not being provided and users are being disrupted. Maintenance takes the Packet Control circuit pack out-of-service due to certain faults, or as a result of the **busyout packet-control C** command being run. Refer to the “Status Commands” section in Chapter 8, ‘‘Maintenance Commands and Trouble-Clearing Aids’’ for more information on the **status packet-control** command.

Error Log Entries and Test to Clear Values

Table 10-476. Packet Control Error Log Entries

Error Type	Aux Data	Associated Test	Alarm Level	On/Off Board	Test to Clear Value
1(a)	Any	None	MAJOR	ON	reset packet-control C (k)
18	0	busyout packet-control C	WARNING	OFF	release packet-control C
257 (b)	Any	None	MAJOR	ON	reset packet-control C (k)
513 (c)	0	None			
769 (d)	Any	Loop Around Test (#585)			
1025 (e)	1	Parity Circuitry Test (#584)	MINOR	ON	test packet-control C l
1281 (f)	0	None			
1537 (g)	0	None			
1793 (h)	0	None			
2049 (i)	0	None			
2305 (j)	Any	Download Test (#581)	MAJOR	OFF	reset packet-control C

Notes:

a. This error occurs when maintenance software resets the Packet Control circuit pack due to an in-line error or certain test failures. Once a threshold number of these errors occur, maintenance places the Packet Control circuit pack into an out-of-service state, and a major on-board alarm is raised on the Packet Control circuit pack.

b. This error occurs due to certain in-line errors and test failures. This error is very serious, and when it occurs maintenance software immediately escalates testing to the destructive reset test (#586).

c. This error indicates that a loss of communication was detected between the SPE software and the Packet Control circuit pack. No alarm is raised. However, if this error occurs repeatedly, software testing escalates to the Reset Test (#586) so that the health of the Packet Control circuit pack can be determined.

d. This error occurs when the Packet Control Loop Around Test (#585) fails because a link cannot be established or because the Packet Control circuit pack cannot send and receive data correctly. No alarm is raised. However, if this error occurs repeatedly, software testing escalates to the Reset Test (#586) so that the health of the Packet Control circuit pack can be determined.

e. This error occurs when the Packet Control Parity Circuitry Test (#584) fails, thus indicating a possible fault with the parity circuitry in detecting Packet Bus parity errors. If this error occurs a number of times exceeding a defined threshold, a minor on-board alarm is raised.

f. This error occurs when a certain circuit pack-level diagnostic test fails, thus indicating a transient fault (which has been recovered) existed on the Packet Control/Packet Bus interface. No alarm is raised because the error does not isolate the fault to the Packet Control circuit pack. However, if the error occurs repeatedly, software testing escalates to the Reset Test (#586) so that the health of the Packet Control circuit pack can be determined.

g. This error occurs when a certain circuit pack-level diagnostic test fails, indicating there is a fault on the Packet Control/Packet Bus interface. No alarm is raised because the Packet Bus may be the source of problem. When this error occurs, Packet Bus maintenance is notified, thereby causing appropriate tests to run.

h. This error occurs when a parity error is detected by the Packet Control circuit pack, indicating some data sent over the Packet Bus is corrupted. No alarm is raised against the Packet Control circuit pack because the problem may be associated with the Packet Bus. When this error occurs, Packet Bus maintenance is notified, thereby causing appropriate tests to run.

i. This error occurs when the Packet Control circuit pack receives a threshold number of frames with invalid address. No alarm is raised because there is no direct indication of a Packet Control fault. The frames may be corrupted by the sending side or by the Packet Bus. No maintenance activity is triggered by this error. No action is required.

j. This error occurs when the Packet Control Download Test (#581) fails. Once a threshold number of these errors occur, a major off-board alarm is raised. Maintenance software retries the download test repeatedly until it passes. Since the **reset packet-control C** command causes the firmware to be downloaded and provides additional diagnostics on this error type, this command should be used when a download failure has occurred.

k. If the specified Packet Control circuit pack is in the active SPE, it must first be busied-out via the **busyout packet-control C** command. After testing has been completed, the Packet Control circuit pack should be released from the busyout state via the **release packet-control C** command.

System Technician-Demanded Tests: Descriptions and Error Codes

When inspecting errors in the system and deciding which ones to address, always investigate errors in the order they are presented in the tables below. By clearing error codes associated with the *Packet Control Parity Circuitry Test,* for example, you may also clear errors generated from other tests in the testing sequence.

Table 10-477. Active PKT-CTRL

Order of Investigation	Short Test Sequence	Long Test Sequence	D/ND[1]
Packet Control Reset Test (#586)			D
Packet Control Parity Circuitry Test (#584)		X	ND
Packet Control Loop Around Test (#585)	X	X	ND
Packet Control Error Counter Read and Clear Test (#583)		X	ND

1 D = Destructive; ND = Nondestructive

Table 10-478. Standby PKT-CTRL

Order of Investigation	Short Test Sequence	Long Test Sequence	D/ND[1]
Packet Control Reset Test (#586)	X	X	ND
Packet Control Loop Around Test (#585)	X	X	ND
Packet Control Error Counter Read and Clear Test (#583)	X	X	ND

1 D = Destructive; ND = Nondestructive

Packet Control Error Counter Read and Clear Test (#583)

This test involves reading and clearing the error counters on the Packet Control circuit pack. The test is performed by sending multiple maintenance requests to the Packet Control circuit pack and waiting for the response to each of the “read and clear” commands from the circuit pack.

Table 10-479. TEST #583 Packet Control Error Counter Read/Clear Test

Error Code	Test Result	Description/Recommendation
1029 2011 2012 2013 2014 2015 2016 2017 2018 2020 2022 2024 2025 2051	ABORT	Refer to STBY-SPE Maintenance documentation for a description of these error codes.
2500	ABORT	Internal system error 1. Retry the command at 1-minute intervals a maximum of 5 times.

Continued on next page

Table 10-479. TEST #583 Packet Control Error Counter Read/Clear Test — *Continued*

Error Code	Test Result	Description/Recommendation
1141	FAIL	The Packet Control circuit pack is not operational. A busied-out Packet Control circuit pack can still be operational. 1. Determine if the Packet Control circuit pack has an active major alarm (via the **display alarm** command). If it does, follow the recommended repair procedures to retire the alarm. Once the alarm is retired, the original command can be retried. 2. If the Packet Control circuit pack does not have an active major alarm, wait one minute and retry the original command. If the Error Code 1141 is again observed, go to the next step. 3. If the Packet Control circuit pack is on the active SPE and is not currently busied-out, issue the **busyout packet-control C** command. Issue the **reset packet-control C** command. If the reset command fails, follow the recommended repair procedures for Test #586. If the reset command passes, issue the **release packet-control C** command (if the Packet Control circuit pack is on the active SPE), and reissue the original command.
1	FAIL	Software was unable to read and clear the Packet Control circuit pack error counters. 1. Retry the command. 2. If the same error code is observed, and the Packet Control circuit pack is on the active SPE and is not currently busied-out, issue the **busyout packet-control C** command. Issue the **reset packet-control C** command. If the reset command fails, follow the recommended repair procedures for Test #586. If the reset command passes, issue the **release packet-control C** command (if the Packet Control circuit pack is on the active SPE), and then reissue the original command.
	PASS	The Packet Control circuit pack succeeded in servicing the read and clear error counter requests.

Packet Control Parity Circuitry Test (#584)

This test checks the error detection capability of the Packet Control circuit pack's circuitry by verifying that it correctly identifies frames on the Packet Bus with parity errors.

NOTE:
This test aborts in a High or Critical Reliability system, or in a system with an alarmed PPN Packet Bus.

Table 10-480. TEST #584 Packet Control Parity Circuitry Test

Error Code	Test Result	Description/Recommendation
1024	ABORT	The Packet Control circuit pack's parity circuitry is currently being used by another maintenance test. 1. Retry the command at 1-minute intervals a maximum of 5 times.
1139	ABORT	The PPN Packet Bus is alarmed. 1. Try to retire the alarm associated with the PKT-BUS (Packet Bus). Refer to the Alarm log via the **display alarm** command. 2. Retry the command when the alarm associated with the Packet Bus circuit pack is retired.

Continued on next page

Table 10-480. TEST #584 Packet Control Parity Circuitry Test — *Continued*

Error Code	Test Result	Description/Recommendation
1141	ABORT	The Packet Control circuit pack is not operational. **NOTE:** A busied-out Packet Control circuit pack can still be operational. 1. Determine if the Packet Control circuit pack has an active major alarm (via the **display alarm** command). If it does, then follow the recommended repair procedures to retire the alarm. Once the alarm is retired, the original command can be retried. 2. If the Packet Control circuit pack does not have an active major alarm, then wait one minute and retry the original command. If the Error Code 1141 is observed again, go to the next step. 3. If the Packet Control is not currently busied-out and is on the active SPE, issue the **busyout packet-control C** command. Issue the **reset packet-control C** command. If the reset command fails, follow the recommended repair procedures for Test #586. If the reset command passes, issue the **release packet-control C** command (if the Packet Control circuit pack is on the active SPE), and then reissue the original command.
1143	ABORT	The test should not be run in a High or Critical Reliability system. 1. No action is required since the parity circuitry is not used to monitor the Packet Bus in a High or Critical Reliability system.
2100	ABORT	Was unable to allocate necessary resources. 1. Retry the command at 1-minute intervals a maximum of 5 times.
2500	ABORT	Internal system error 1. Retry the command at 1-minute intervals a maximum of 5 times.

Continued on next page

Table 10-480. TEST #584 Packet Control Parity Circuitry Test — *Continued*

Error Code	Test Result	Description/Recommendation
1	FAIL	The Packet Control parity circuitry is malfunctioning. 1. Issue **test packet-control C long** command to retry the test. 2. This could be caused by a Packet Bus fault. Refer to Chapter 9 for the procedures to be followed. 3. The Packet Control circuit pack needs to be replaced. However, it is likely that the Packet Control is providing service, and only its ability to maintain the Packet Bus is affected by the fault. If the Packet Control appears to be providing service (packet endpoints are functioning and/or the **status packet-control C** command indicates that links are established), it is not critical to replace the circuit pack immediately, and a time may be chosen to minimize customer down-time.
	PASS	The Packet Control parity circuitry is functioning properly.

Packet Control Loop Around Test (#585)

This test checks whether the Packet Control circuit pack can send and receive data correctly. The test performs the following major functions:

1. Establishes an LAPD link from the Packet Control circuit pack to itself. (See Figure 10-84.)
2. Transmits and receives test data over the testing link.

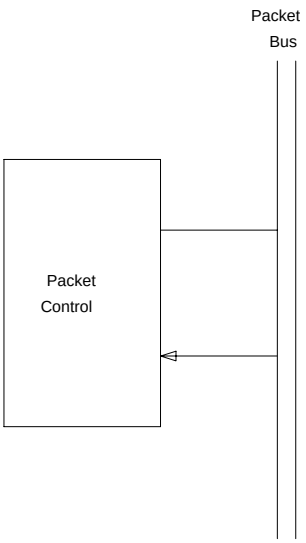

Figure 10-84. Test Configuration

Table 10-481. TEST #585 Packet Control Loop Around Test

Error Code	Test Result	Description/Recommendation
1029 2011 2012 2013 2014 2015 2016 2017 2018 2020 2022 2024 2025 2051	ABORT	Refer to STBY-SPE Maintenance documentation for a description of these error codes.
1139	ABORT	The Packet Bus is alarmed. 1. Try to retire the alarm associated with the Packet Bus. Refer to the Alarm Log via the **display alarm** command. 2. Retry the command when the alarm associated with the Packet Bus circuit pack is retired.

Continued on next page

Table 10-481. TEST #585 Packet Control Loop Around Test — *Continued*

Error Code	Test Result	Description/Recommendation
1141	ABORT	The Packet Control circuit pack is not operational. **NOTE:** A busied-out Packet Control circuit pack can be operational. 1. Determine if the Packet Control circuit pack has an active major alarm (via the **display alarm** command). If it does, follow the recommended repair procedures to retire the alarm. Once the alarm is retired, the original command can be retried. 2. If the Packet Control circuit pack does not have an active major alarm, wait one minute and retry the original command. If the Error Code 1141 is again observed, go to the next step. 3. If the Packet Control circuit pack is not currently busied-out and is on the active SPE, issue the **busyout packet-control C** command. Issue the **reset packet-control C** command. If the reset command fails, follow the recommended repair procedures for Test #586. If the reset command passes, issue the **release packet-control C** command (if the Packet Control circuit pack is on the active SPE), and then reissue the original command.
2500	ABORT	Internal system error 1. Retry the command at 1-minute intervals a maximum of 5 times.
1-3	FAIL	Maintenance was unable to establish a loop around link from the Packet Control circuit pack back to itself, or was unable to receive the data that was sent out over one side of the loop around link. 1. Issue **test packet-control C short** command to retry the test. 2. If the same error code is observed, maintenance software automatically escalates the testing. No specific action is required.
	PASS	The Packet Control circuit pack can send and receive data correctly.

Packet Control Reset Test (#586)

This test resets the Packet Control circuit pack, downloads Packet Control circuit pack firmware form tape, and then causes the Packet Control circuit pack to begin operation.

WARNING:
This test is destructive and disrupts service when run on the Packet Control circuit pack in the Active SPE. This test is not destructive when run on the Packet Control circuit pack in the Standby SPE of a High or Critical Reliability system. When this test is run on the Packet Control circuit pack on the Active SPE, the "busyout packet-control C" command must be executed first. Once testing has been completed, a busied-out Packet Control should be released via the release packet-control C command.

Table 10-482. TEST #586 Packet Control Reset Test

Error Code	Test Result	Description/Recommendation
1029 2011 2012 2013 2014 2015 2016 2017 2018 2020 2022 2024 2025 2051	ABORT	Refer to STBY-SPE Maintenance documentation for a description of these error codes.
1015	ABORT	The Packet Control circuit pack is not busied out. 1. Retry the command after running the **busyout packet-control C** command.
1152	ABORT	The Packet Control circuit pack hardware was successfully reset and the circuit pack was successfully put back into service. However, a new image of Packet Control circuit pack firmware was not able to be downloaded from the tape, because the tape was unavailable. Nonetheless, the existing firmware on the circuit pack is valid, and there is no need to repeat this test.

Continued on next page

Table 10-482. TEST #586 Packet Control Reset Test — *Continued*

Error Code	Test Result	Description/Recommendation
2500	ABORT	Internal system error 1. Retry the command at 1-minute intervals a maximum of 5 times.
1-3	FAIL	The reset test failed. 1. Retry the command. 2. If it fails again with the same error code, replace the Packet Control circuit pack.
5	FAIL	The SPE could not communicate with the Packet Control circuit pack. This indicates that either the Packet Control circuit pack is not installed or that it has failed. 1. Examine the appropriate carrier to determine if there is a Packet Control circuit pack in the correct slot. If there is, go to the next step. If there isn't, the problem is that the Packet Control circuit pack is administered (that is, the "Packet Bus Activated?" field on the Maintenance-Related System Parameters Form is set to "y") but the circuit pack isn't installed. If the system is supposed to have a Packet Control circuit pack, the system must be upgraded appropriately (see upgrade documentation). If the system is not supposed to have a Packet Control circuit pack, then the Packet Control circuit pack should be unadministered by setting the "Packet Bus Activated?" field on the Maintenance-Related System Parameters Form to "n." Refer to the "Maintenance-Related System Parameters Form" section in Chapter 5, ''Routine Maintenance Procedures'' for more information on the "Packet Bus Activated?" field. 2. Retry the command. 3. If it fails again with the same error code, replace the Packet Control circuit pack.

Continued on next page

Table 10-482. TEST #586 Packet Control Reset Test — *Continued*

Error Code	Test Result	Description/Recommendation
1150 1188 1189 1190	FAIL	The Packet Control circuit pack was not successfully downloaded, and the Packet Control circuit pack currently does not contain valid downloadable firmware. The error codes have the following meanings: 1150- Generic tape error (not any of the following three errors) 1188- Internal system error 1189- Tape currently in use 1190- No tape cartridge in tape drive 1. Verify that there is a tape cartridge in the tape unit. 2. If the tape unit is in use (the yellow LED on the tape drive is on and there is tape cartridge motion), wait until the first request is complete. **If there does not appear to be tape motion and/or the yellow LED on the tape drive is not on, then go to the next step.** 3. Retry the command at 1-minute intervals a maximum of three times. 4. Verify that the tape unit is not alarmed. Use the **display alarm** command and refer to the TAPE Maintenance documentation for recommended repair procedures to retire the alarm, if one exists; otherwise go to the next step. 5. If the test has failed consistently with the 1150 error code, then escalate the problem. If the test has failed consistently with the 1188 error code, replace the tape cartridge and then retry the reset command. If the test failed consistently with the 1189 error code, escalate the problem. If the test failed consistently with the 1190 error code, then replace both the tape cartridge and the tape drive.
2064	FAIL	The downloaded firmware cannot be executed with this hardware vintage of the Packet Control circuit pack. 1. Retry the command. 2. If it fails again with the same error code, replace the tape cartridge and retry the reset command.
2065	FAIL	The tape does not contain valid Packet Control circuit pack firmware. 1. Retry the command. If the same error code is returned, replace the tape and then retry the command.

Continued on next page

Table 10-482. TEST #586 Packet Control Reset Test — *Continued*

Error Code	Test Result	Description/Recommendation
2073	FAIL	After being downloaded from the tape, the Packet Control circuit pack does not contain valid downloadable firmware in its memory. 1. Retry the command. 2. If the tests fails again with the same error code, then the tape may contain corrupted Packet Control circuit pack firmware. Replace the tape and retry the command. If the test still fails with this error code, then replace the Packet Control circuit pack.
2102	FAIL	As the Packet Control circuit pack firmware was being downloaded from system tape, a block of data could not be read from the tape. This indicates a problem with the tape unit, and not with the Packet Control circuit pack. 1. Test the TAPE with the long option and with a repeat option of 3. If any of the tests fail, or if there are any tape alarms, refer to the TAPE Maintenance documentation and follow the recommended repair procedures. If a tape problem is detected and then fixed, then retry the reset command. 2. If no tape problem was detected in the previous step, then there may be a problem with the area on the tape where the Packet Control circuit pack firmware resides. Replace the tape cartridge and then retry the reset command.
2500	FAIL	Internal system error 1. Retry the command at 1-minute intervals a maximum of 5 times.
	PASS	The reset command passed and the Packet Control circuit pack is operational. If the Packet Control circuit pack was busied-out, it needs to be released (via the **release packet-control C** command) before it can be considered in service.

PKT-INT (Packet Interface)

MO Name (in Alarm Log)	Alarm Level	Initial Command to Run[1]	Full Name of MO
PKT-INT	MAJOR	reset packet-interface 1CS	Packet Interface
PKT-INT	MINOR	test packet-interface 1CS	Packet Interface
PKT-INT	WARNING	test packet-interface 1CS	Packet Interface

1 C is the carrier location (a or b), S is the instance of the Packet Interface circuit pack (1 or 2). The carrier location is required only for duplicated SPEs.

The Packet Interface (PKT-INT) interfaces between the Switch Processing Element (SPE) and packet endpoints (such as ISDN-BRI stations or ISDN-PRI trunks). Two instances of PKT-INT are provided on the TN2401/TN794 NetPkt circuit pack:

- PKT-INT 1 communicates through the TDM bus only
- PKT-INT 2 communicates through the Packet bus only

The Packet Interface (PKT-INT) appears only in R7si and later systems. Pre-R7si systems use the TN778 Packet Control (PKT-CTRL) to provide the Packet Bus interface for the SPE.

If the system is equipped with the Standard Reliability configuration (without duplicated SPEs), a failure of both Packet Interface instances prevents call origination and tear-down for telephones and trunks provided by the following circuit packs:

- TN464C, TN2464 Universal DS1 circuit packs - ISDN PRI service
- TN767E DS1 Interface circuit pack - ISDN PRI service w/o Packet Bus
- TN556B/C, TN2198 ISDN-BRI Line circuit packs — ISDN BRI service
- TN2185 ISDN Trunk-Side BRI - ISDN-BRI Trunk service
- TN566, TN2208 Multi-Function circuit packs- ASAI-over-Ethernet service
- TN800, TN801, TN803 MAPD circuit packs - LAN Gateway Emulation
- TN802 MAPD circuit packs - IP Trunk Emulation, Media Processor applications
- TN799 CLAN - Ethernet and Asynchronous PPP service

A failure of only one PKT-INT instance may allow some links to transfer to the other PKT-INT instance.

For systems with High Reliability or Critical Reliability option (i.e. with duplicated SPEs),

If a Packet Interface fails on:	Then the switch:	SPE interchange?
Active SPE	Raises on-board MAJOR alarm on Packet Interface	Y
Standby SPE	Raises on-board MAJOR alarm on Packet Interface	N

The links that pass through the Packet Interfaces are application links or system links:

a. Application links, such as the TCP/IP links that C-LAN supports include:
   - Distributed Communication System (DCS)
   - Audio Information Exchange (AUDIX)
   - Call Management System (CMS)
   - Outgoing Call Management (OCM)
   - Adjunct Switch Application Interface (ASAI)

b. System links
   - ISDN PRI D channel signaling links
   - ISDN BRI D channel broadcast and point-to-point signaling links
   - Adjunct Switch Application Interface (ASAI) links
   - Remote Socket Links (RSL) and Remote Socket Control Links (RSCL)

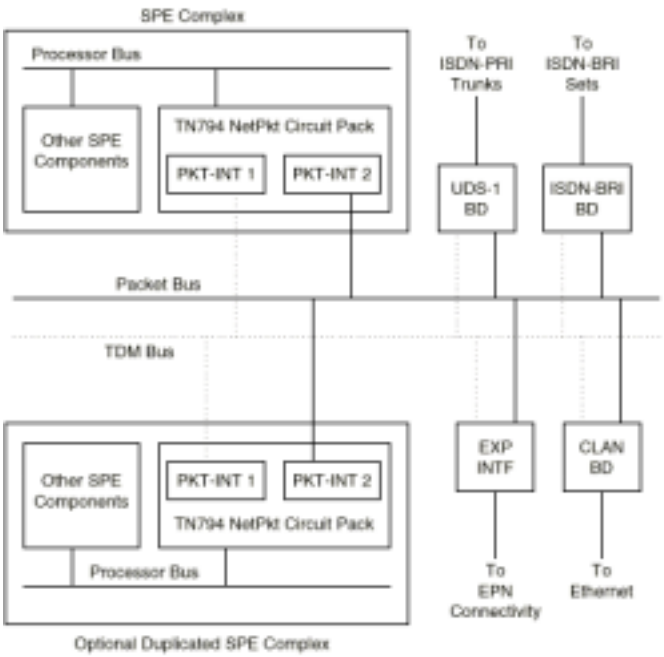

Figure 10-85. Packet Interface connections

Packet Interface Service Operations

The following sections provide more background information about Packet Interface service operations:

- "Administration"
- "Packet Interface Replacement"
- "Demand Reset of a Packet Interface"
- "Service States"
- "Duplication Impact"
- "Maintenance Object Interactions"

Administration

There are no **add** or **remove** commands for the Packet Interfaces. Instead, the System Parameters Maintenance Form (p. 2) provides Packet Interface fields (`Packet Intf1` and `Packet Intf2`) to indicate the presence of Packet Interfaces.

In systems with TN2401/TN794 NetPkt circuit packs, Packet Interfaces are always present. The system sets the corresponding Packet Interface fields to “y” when it boots, and allows no change to those fields.

Packet Interface Replacement

To replace a Packet Interface, follow the procedure to replace the TN2401/TN794 NetPkt circuit pack in the SPE carrier. Power down the SPE carrier before removing the NetPkt circuit pack. Then power back up the SPE carrier after inserting the NetPkt circuit pack.

Demand Reset of a Packet Interface

System software denies a demand reset of a Packet Interface on an active SPE (**reset packet-interface**) if the Packet Interface is in service. A reset would disrupt service, existing calls, and links to adjuncts such as AUDIX. The software that controls Packet Interface maintenance puts a Packet Interface in the out-of-service state if that Packet Interface has been reset four times within the last 15 minutes, as part of the automatic recovery action that is initiated when a hardware fatal fault condition is detected.

A demand reset of a Packet Interface on the standby SPE is not disruptive and is allowed regardless of the service state of the associated maintenance software. When a standby Packet Interface is reset, the following actions take place:

- Memory shadowing is turned off.
- The standby SPE is booted into Maintenance Mode. Both standby Packet Interfaces are reset automatically during this process.
- The Packet Interface reset action is performed by the Standby SPE.
- The Standby SPE is put back into Standby Mode.
- A standby SPE memory refresh is performed.

It takes approximately one minute after a Packet Interface on the standby SPE is reset before memory refresh of the standby SPE is complete. During that time, any demand tests of the standby Packet Interface abort.

Service States

Packet Interface maintenance software monitors the in-service/out-of-service state of each Packet Interface instance. In a system equipped with a single SPE, if maintenance software detects that a Packet Interface instance has a “fatal fault,” it automatically attempts to reset that instance as quickly as possible. An extensive set of diagnostic tests are run when the Packet Interface is reset.

If the Packet Interface diagnostic tests do not pass in a system *without* duplicated SPEs, the failing Packet Interface instance is placed in an out-of-service state. All links handled by that instance go out of service, except for those than can be transferred or “migrated” to the other Packet Interface instance.

If the system is equipped with duplicated SPEs and if the standby SPE has an acceptable state-of-health, an SPE interchange occurs instead of a reset of the Packet Interface. This is less disruptive than a reset, since stable calls are not disconnected.

A Packet Interface also is put in the “out-of-service” state if it has reported a fatal fault at system initialization time or if the Packet Interface has been reset by background maintenance four times within the last 15 minutes, whether or not the Reset test passes. The state of all Packet Interfaces can be determined by using the **status packet-interface** command.

Duplication Impact

The following concepts apply only for duplicated SPE systems:

- Packet Bus Connection

  In a system equipped with duplicated SPEs, the Packet Interfaces in the Standby SPE cannot access the Packet Bus to write data except during the time of a planned SPE interchange and when the Peer Link Test (#888) runs. Consequently, the Maintenance Looparound Test (#886) that requires access to the Packet Bus is not run on Packet Interfaces on the Standby SPE.

- SPE Interchange

  Severe Packet Interface faults that cause system and application links to go down are detected within 1 second. A fatal fault error message is generated and the Packet Interface maintenance software attempts to run the Packet Interface Reset test. High Reliability or Critical Reliability systems request an SPE interchange instead of a reset of the Packet Interface, since stable calls are preserved during an SPE interchange.

Maintenance Object Interactions

- Packet Bus Maintenance

  Packet Interfaces 1A2 and 1B2 physically interact with the PKT-BUS (Packet Bus). For certain types of Packet Interface errors, it may be difficult to isolate the fault to one of these two components. In these cases, Packet Interface maintenance will forward the error report to the Packet Bus maintenance, thus causing Packet Bus maintenance to record a Packet Bus fault in the hardware error log and to run appropriate Packet Bus tests.

- Packet Circuit Pack Maintenance

  The operation of Packet Interfaces 1A2 and 1B2 affect the operation and maintenance of other circuit packs connected to the Packet bus. This includes:

  1. Expansion Interface circuit pack maintenance (EXP-INTF)
  2. BRI applications (BRI-PT)
  3. Universal DS1 applications (UDS1) for ISDN/PRI applications
  4. C-LAN applications
  5. ASAI applications

  Some errors of Packet Circuit Packs may require examination of the Packet Interface operating status. To obtain this information, examine the Error and Alarm Logs for PKT-INT entries. Also issue the **status packet-interface** command to determine the service state of the Packet Interfaces (for example, in-service/out-of-service) and information about the total number of Packet Interface links assigned to a Packet Interface instance. For a Packet Interface in the standby SPE in a system equipped with duplicated SPEs, a Packet Interface is in “standby” mode if it is not out of service due to a failure condition. The number of links for a standby Packet Interface is always zero.

  In general, if all links for a Packet Interface circuit pack on an Active SPE are shown in the “Failed Links” category, there may be a fault on the Packet Interface or on the Packet Bus that caused all links to go down. If only a small percentage of the links are shown as “Failed Links,” then the Packet Interface is probably not the source of the problem. Examples of the source of individual link failures include the failure of a BRI telephone set, a disconnect of the cord to a BRI set, and a failure or removal of an Expansion Interface circuit pack in an Expansion Port Network, The disconnect of a BRI set causes three link failures and the removal of an EI board in an EPN causes one link failure. Refer to Chapter 8, “Maintenance Commands” for more information on the **status packet-interface** command.

For the case where not all links are in the “Failed Links” category, examine the alarm log and error log for failures of the following circuit pack types and follow the repair procedures for those circuit packs before considering replacing the TN2401/TN794 NetPkt associated with a suspect Packet Interface:

- Expansion Interface circuit pack (EXP-INTF)
- ISDN-BRI Line circuit packs, ports, and stations (BRI-BD, BRI-PORT, BRI-SET, ATT-PORT, ATT-ADJ,)
- ISDN-BRI Trunk circuit pack and ports (TBRI-BD, TBRI-PT)
- Universal DS1 circuit packs and ports (UDS1-BD, TIE-DS1)
- DS1 Interface circuit packs and ports (DS1-BD, TIE-DS1)
- C-LAN circuit packs and ports (CLAN-BD, RSCL-PT, PPP-PT, ETH-PT)
- ASAI circuit packs and ports (ASAI-BD, ASAI-PT, ASAI-ADJ, ASAI-EPT, LGATE-BD, LGATE-PT, LGATE-AJ, ATTE-PT, ATTE-AJ, MAPD-BD)
- Media Processor circuit pack (MEDPRO, MEDPRO-RES)

Error Log Entries and Test to Clear Values

Table 10-483. Packet Interface Error Log Entries

Error Type	Aux Data	Associated Test	Alarm Level	On/ Off Board	Test to Clear Value[1]
0[2]	0	Any	Any	ON	test packet-interface 1CS r 2
1 (a)	Any	None	MAJOR[3]	ON	reset io-processor[4]
10 (b)	0	None			
23 (c)	0	None	MAJOR[3]	OFF	
50 (d)	0	None			
100 (e)	0	None			
217 (g)	0	None	WARNING	OFF	
257 (f)	Any	None	MAJOR[3]	ON	reset io-processor[4]
267 (g)	0	None	WARNING	OFF	
513 (h)	Any	None	MAJOR[3]	ON	reset io-processor[4]
769[5] (i)	Any	Mtce Looparound Test (#886)[5]	MAJOR[3]	ON	test packet-interface 1CS r 3
1025 (j)	Any	Private Looparound Test (#885)	MAJOR[3]	ON	reset packet-interface 1CS[4]

Continued on next page

Table 10-483. Packet Interface Error Log Entries — *Continued*

Error Type	Aux Data	Associated Test	Alarm Level	On/ Off Board	Test to Clear Value[1]
1026 (j)	Any	None	MAJOR[3]	ON	reset packet-interface 1CS[4]
1281[5] (k)	Any	None	MAJOR[3]	ON	reset packet-interface 1CS[4]
1537 (l)	Any	Memory Checksum Test (#884)	MINOR	ON	test packet-interface 1CS r 2
1793 (m)	Any	Memory Checksum Test (#884)	MINOR	ON	test packet-interface 1CS r 2
2049[5] {n}	Any	None	WARNING	ON	test packet-interface 1CS r 25
2305[5] (o)	Any	None			test packet-interface 1CS r 2
2561 (p)	Any	Active-Standby Peer Link Test (#888)	MINOR	OFF	test packet-interface 1CS s r 2
2817[5] (q)	Any	Read and Clear Test (#887)	MINOR/ MAJOR[3]	ON	test packet-interface 1CS s
3074 (r) 3073 3072	Any	Mtce Looparound Test (#886)[5]	WARNING	OFF	test packet-interface 1CS s r 2
3329 (s)	Any	None	WARNING	OFF	reset packet-interface 1CS[4]
3585[5] (t)	Any	None	WARNING	OFF	reset packet-interface 1CS[4]
3841[5] (u)	Any	None	MAJOR[3]	OFF	reset packet-interface 1CS[4]

1 C is the carrier location (a or b), S is the instance of the Packet Interface (1 or 2). The carrier location is required only for duplicated SPEs.

2 Indicates that an alarm was raised but an associated error was not entered into the hardware error log due to a momentary overload condition caused by a burst of hardware or software error reports. Run the long test sequence. Refer to the appropriate test descriptions for any failures and follow the recommended procedures.

3 If a spontaneous interchange has occurred (as indicated by STBY-SPE error type 103 or the display init causes screen), execute a test long clear of the alarmed circuit pack and follow recommended procedures.

4 The I/O Processor or Packet Interface instance in the active SPE can only be reset if it has been taken out of service by background maintenance software. In the standby SPE, the I/O Processor and Packet Interfaces can be reset independent of service state.

5 The error type or test applies only to Packet Interface 2, i.e., the Packet Interface instance that uses the packet bus.

Notes:

a. Error 1 occurs when background maintenance software has reset the Packet Interface as a fault recovery action. It is used to keep track of the number of times that the Packet Interface is reset, independent of whether or not the Reset test passed. Once three of these errors have occurred in the last 15 minutes, the next such error will cause maintenance to place the Packet Interface into an out-of-service state, raise a MAJOR on-board alarm against the Packet Interface, and automatically reset the io-processor on the TN2401/TN794 NetPkt circuit pack. If the io-processor reset does not restore to service the alarmed Packet Interface, then the io-processor reset attempt fails, and the software will continue to attempt to reset the io-processor. When three of these attempts have failed within a 15 minute period, maintenance software puts the io-processor into a held-reset state and continues to attempt io-processor resets every three (3) minutes as long as the io-processor resets continue to fail.

NOTE:
Whenever the io-processor is reset, both Packet Interface instances and all 8 data channels (DATA-CHL) are reset as well, and service is interrupted for any calls using these MOs. Refer to the IO-PROCR section for more information concerning io-processor resets.

1. Check to see if Error Types 257, 513, 769, 1025, 1281, or 3841 are present in the hardware error log. If one or more of those error codes are present, refer to the information associated with those errors for the appropriate repair procedures.
2. If no other Packet Interface errors appear in the error log, and if the Packet Interface is not in a held reset state as indicated by the absence of a MAJOR alarm with a Service State of OUT, no action should be taken.
3. If a Packet Interface MAJOR alarm is present and no other Packet Interface error codes are in the hardware error log, execute a demand reset of the IO Processor by entering **reset io-processor**. This command resets both Packet Interface instances as well as the IO Processor. Refer to the repair procedures for Test #704.

b. Error 10 indicates that the Packet Interface maintenance software caused an escalating system WARM restart as part of a recovery action for certain Packet Interface failures. A SYSTEM Error Type 10 should also be present, indicating that a software initiated WARM restart occurred.

1. Check to see if Error types 513, 1025, or 3074 are present in the hardware error log. If they are present, refer to the repair procedures for those errors for further action.

c. Error 23 along with an associated MAJOR alarm indicates that Packet Interface translation data was loaded at boot time but the Packet Interface was not detected to be physically present

1. Reboot the SPE. If the error persists, replace the active TN2401/TN794 NetPkt circuit pack.

d. Error 50 indicates that the SPE is sending more downlink messages than the Packet Interface can keep up with. This is an in-line error not produced by any test. When this error is reported, application software is slowed down to allow the Packet Interface to process existing downlink messages. If there is a hardware problem, the Packet Interface test will normally cause other errors to be logged. In the rare case where there are no other PKT-INT errors logged but error 50 occurs more than 10 times in the last hour, follow normal escalation procedures.

e. Error 100 indicates that the SPE requested a reset of Packet Interfaces on the active SPE as part of a Packet Interface recovery action. High or Critical Reliability systems request a SPE interchange instead of a Packet Interface reset, if the health of the standby SPE allows an interchange.

    1. If no other PKT-INT errors except Error Type 1 are present, this means that the Packet Interface was in a fatal fault state at the time of system initialization or SPE interchange and it was reset successfully. No other actions are required.

    2. If PKT-INT error codes other than Error Type 1 are present, refer to the repair procedures for those errors to correct the failure.

f. Error 257 indicates that maintenance has detected a Packet Interface fatal failure. This error is a very serious, and when it occurs, maintenance software immediately escalates testing to the destructive reset test (#889).

    1. If the Packet Interface circuit has a MAJOR alarm, reset the Packet Interface (**reset io-processor**).

    2. If the Packet Interface is not alarmed, no action is required.

g. Errors 267 and 217 indicate that the number of Packet Interfaces detected as being physically present exceeds number of Packet Interfaces supported by the software configuration.

h. Error 513 is a Message Handshake failure, indicating that a failure with the message protocol between the SPE software and the Packet Interface.

    1. If the Packet Interface circuit has a MAJOR alarm, reset the Packet Interface (**reset io-processor**).

    2. If the Packet Interface is not alarmed, no action is required.

i. Error 769 indicates that there was a failure in the Maintenance Looparound test (Test #886). A maintenance looparound link cannot be established or the Packet Interface cannot send and receive data correctly as part of the looparound test. If the number of errors exceeds a defined threshold, a MAJOR alarm is raised. In a system equipped with duplicated SPEs, a failure of the Maintenance Looparound test may have caused a SPE interchange which results in an alarm associated with Error Type 769 against a Packet Interface circuit pack that is currently on the standby SPE. If so, it may be necessary to force the standby SPE to go active by using the SPE-SELECT switches on the DUPINT circuit packs to run the Maintenance Looparound test to make sure the problem is cleared. For more information, refer to the repair procedures for Test #886.

j. Error 1025 indicates a failure of the private Level 3 Looparound Test (Test #885).

   1. If the Packet Interface has a MAJOR alarm:

      a. Reset the Packet Interface (**reset packet-interface CS**).

      b. Refer to the repair procedures for the Packet Interface Reset Test (#889).

   2. If the Packet Interface is not alarmed, no action is required.

k. Error 1281 indicates that the Packet Interface has Translation RAM failures. PKT-INT Translation RAM is used to convert the addresses of a packet to the destination endpoint address.

   1. If the Packet Interface has a MAJOR alarm:

      a. Reset the Packet Interface (**reset packet-interface CS**).

      b. Refer to the repair procedures for the Packet Interface Reset Test (#889).

   2. If the Packet Interface is not alarmed, no action is required.

l. Error 1537 indicates a Boot PROM memory failure. The Packet Interface may still be operational if no other errors are reported. However the TN2401/TN794 NetPkt circuit pack may report a fatal fault during board initialization.For more information, refer to the repair procedures for Test #884.

m. Error 1793 indicates a FLASH Memory test failure. The Packet Interface may still be operational if no other errors are reported. However the TN2401/TN794 NetPkt circuit pack may report a fatal fault during board initialization. This may occur during a system recovery level more severe than a WARM restart. For more information, refer to the repair procedures of Test #884.

n. Error 2049 indicates a LAPD Receive Buffer Overflow error. The Packet Interface Packet Bus receive buffer overflowed. For more information, refer to the repair procedures of Test #887.

o. Error 2305 indicates a Packet Bus Interface Detected Parity failure. The Packet Interface received packets with parity error from the Packet Bus.

   1. Check for errors logged against the Packet bus and Maintenance/Test circuit pack. Refer to the appropriate repair procedures to clear those errors first.

   2. Check all other circuit packs connected to the Packet bus in the same cabinet. Packet Bus failures are likely to be caused by a faulty circuit pack connected to the backplane or bent pins on the backplane.

   3. If Steps 1 and 2 above do not clear the problem, execute the **test packet-interface** command and follow repair procedures described for Test #887.

p. Error 2561 is an Active-Standby Peer Link test failure indicating a possible failure of a Packet Interface on the active SPE or a failure of the corresponding Packet Interface on the standby SPE. If the number of errors exceeds a defined threshold, a MINOR alarm is raised. For more information, refer to the repair procedures of Test #888.

q. Error 2817 indicates a Standby Packet Interface Translation RAM failure. A MINOR alarm is raised when there are 1 to 5 bad memory locations. Execute the test packet-interface command and follow repair procedures described for Test #887.

r. Errors 3074, 3073, and 3072 indicate Packet Interface Transmit Buffer Overflow, which means that the number of transmit buffers required by software exceeded the number available. A 3074 error is generated when the Packet Interface sends an in-line hardware error to maintenance software indicating transmit buffer overflow. As part of the background recovery action for this error, maintenance software automatically runs the Maintenance Looparound Test (#886). If that test fails, maintenance software generates Error Types 3073 and 3072, and it requests a system WARM restart. If, after the WARM restart, transmit buffer overflow errors continue to be reported, maintenance software generates Error Type 100 and resets the Packet Interface. High or Critical Reliability systems request a SPE interchange instead of a Packet Interface reset, if the health of the standby SPE allows an interchange.These errors may be the result of system overload due to a problem with communication between the Packet Interface and the EPNs.

1. Clear errors against any of these components first:
   - the Expansion Interface circuit pack
   - C-LAN circuit pack
   - BRI Line circuit pack and BRI endpoints
   - BRI Trunk circuit pack
   - the Universal DS1 circuit pack supporting PRI service
   - Media Processor circuit pack
   - MAPD circuit pack
   - LAN Gateway circuit pack (TN566, TN2208)
2. Enter the **test packet-interface short** command against the Packet Interface associated with the error. If the Maintenance Looparound Test (#886) passes, the alarm clears.
3. If the test fails, repeat the test 5 times.
4. If it continues to fail, follow normal escalation procedures.

s. Error 3329 indicates that the TDM clock has failed (TONE-BD and TDM-CLK alarms). Refer to TDM-CLK and/or TONE-BD for further action. The Packet Interface is taken out of service when this failure occurs.

   1. Execute the **reset packet-interface** command to bring the Packet Interface back into service.

t. Error 3585 indicates a Packet bus failure. Refer to the Packet Bus maintenance documentation for further action.

u. Error 3841 indicates that the Packet Interface has reported a fatal fault failure condition that may be caused by a Packet Bus failure on the Processor Port Network.

   1. If Error Type 3585 has also been reported, refer to PKT (Packet Bus) maintenance. After the Packet Bus failure has been corrected, bring the Packet Interface back into service (**reset packet-interface**).
   2. If Error Type 3585 has not been reported, enter the **reset packet-interface** command and follow the repair steps associated with test #889.

System Technician-Demanded Tests: Descriptions and Error Codes

Always investigate tests in the order presented in the table below. By clearing error codes associated with the *Packet Interface Private Looparound* test for example, you may also clear errors generated from other tests in the testing sequence.

Order of Investigation	Short Test Sequence	Long Test Sequence	Reset Board Sequence	D/ ND[1]
Packet Interface Reset Test (#889)			X	D
Packet Interface Private Looparound Tests (#885)		X		ND
Packet Interface Maintenance Looparound Test (#886) (a)	X	X		ND
Packet Interface Memory Checksum Test (#884)		X		ND
Packet Interface Error Counter Read and Clear Test (#887)	X	X		ND
Packet Interface Active-Standby Peer Link Test (#888) (b)	X	X		ND

1 D = Destructive; ND = Nondestructive

Notes:

a. This test is run only on Packet Interfaces on an active SPE.

b. This test is run only on Packet Interfaces on a standby SPE.

Memory Checksum Test (#884)

This test involves sending a message to the Packet Interface to run private non-destructive memory checksum tests on the firmware text residing in Boot PROM and FLASH memory. If the test fails during background testing, the Packet Interface will remain operational until a reset packet-interface is executed. Then the initialization firmware will fail and will put the packet interface in an out-of-service state. This test causes the entire I/O-Processor memory to be tested. The I/O Processor does not support its own Flash Memory Checksum test.

Table 10-484. TEST #884 Memory Checksum Test

Error Code	Test Result	Description/Recommendation
1006 1137	ABORT	Packet Interface is in the out-of-service state so normal maintenance tests will not run. 1. Request a Packet Interface reset using the **reset packet-interface CS** command. Refer to the Packet Interface Reset Test (#889) repair procedures for further action.
1334	ABORT	The Packet Interface command queue is full. This should be a temporary condition caused by a high rate of commands being sent to a Packet Interface. Continued operation with a full command queue will cause a system WARM restart that may escalate to more severe restart levels. 1. Retry the command at 10-second intervals, a maximum of 5 times.
1338	ABORT	The test is not allowed to run since a planned SPE interchange is in progress. A planned interchange may be caused by 24 hour scheduled testing. During this time the terminal will be held out of service but it should recover automatically after three minutes. 1. Wait three minutes and retry the command.

Continued on next page

Table 10-484. TEST #884 Memory Checksum Test — *Continued*

Error Code	Test Result	Description/Recommendation
1339	ABORT	The test could not run on the standby Packet Interface because the standby SPE is unavailable. 1. Refer to the STBY-SPE maintenance documentation for information on why a standby SPE may be unavailable and what repair actions should be taken. The **status system 1**screen displays the status of the standby SPE. Unavailability of the standby SPE may be caused by a variety of reasons such as the setting the SPE-SELECT switches on the DUPINT circuit packs to the position of the active SPE, a failure of the DUPINT circuit pack, or loss of power on the standby SPE. The `SPE Select Switch` field on the **status syst 1**screen displays `spe a` or `spe b` if the SPE-SELECT switches are in the a or b position, respectively.
2000	ABORT	Response to the test request was not received within the allowable time period. 1. Retry the command at 1-minute intervals, a maximum of 3 times.
2500	ABORT	Internal system error 1. Retry the command.
	NO BOARD	The Packet Interface is not detected as being physically present. 1. Reboot the system, then retry the command. If the NO BOARD indication persists, replace the TN2401/TN794 NetPkt circuit pack.

Continued on next page

Table 10-484. TEST #884 Memory Checksum Test — *Continued*

Error Code	Test Result	Description/Recommendation
1537	FAIL	The Boot PROM memory checksum test failed. The Packet Interface may still be operational. 1. Retry the command. 2. If the same error code occurs a. If the system is not equipped with the High Reliability or Critical Reliability Configuration replace the TN2401/TN794 NetPkt at a time that would cause the least disruption of service. The Packet Interface is still functional but should be replaced since it may not operate after a system reboot and it will enter a fatal fault state if it is reset for other reasons. b. If the system is equipped with the High Reliability or Critical Reliability Configuration and if the Packet Interface is on the standby SPE, replace the standby TN2401/TN794 NetPkt circuit pack. c. If the system is equipped with the High Reliability or Critical Reliability Configuration and if the Packet Interface is on the active SPE, perform a planned SPE interchange by entering the command **reset system interchange**. Use the **status syst 1**command to determine that the standby SPE is in *standby* mode, and retry the test command. If the test of the Packet Interface on the standby SPE continues to fail, replace the standby TN2401/TN794 NetPkt circuit pack.

Continued on next page

Table 10-484. TEST #884 Memory Checksum Test — *Continued*

Error Code	Test Result	Description/Recommendation
1793	FAIL	The Flash memory checksum test failed. The Packet Interface may still be operational but it will fail if a reset is executed. 1. Retry the command. 2. If the same error code occurs a. If the system is not equipped with the High Reliability or Critical Reliability Configuration replace the TN2401/TN794 NetPkt circuit pack at a time that would cause the least disruption of service. The Packet Interface is still functional but should be replaced since it may not operate after a system reboot and it will enter a fatal fault state if it is reset for other reasons. b. If the system is equipped with the High Reliability or Critical Reliability Configuration and if the Packet Interface is on the standby SPE, replace the standby TN2401/TN794 NetPkt circuit pack. c. If the system is equipped with the High Reliability or Critical Reliability Configuration and if the Packet Interface is on the active SPE, perform a planned SPE interchange by entering the command **reset system interchange**. Use the **status syst 1**command to determine that the standby SPE is in *standby* mode, and retry the test command. If the test of the Packet Interface on the standby SPE continues to fail, replace the standby TN2401/TN794 NetPkt circuit pack.
	PASS	The Packet Interface's firmware is in a proper state. If problems are still reported on the Packet Interface, check for errors on the Private Looparound test (#885) and Maintenance Looparound Test (#886).

Private Looparound Tests (#885)

This test requests the Packet Interface to execute its three private looparound tests: Level 2 looparound, Broadcast path looparound, and Level 3 looparound. These tests verify the health of the Packet Interface's Packet Bus interface, as well as the translation RAM, inward and outward bound data paths, parity indications and CRC calculations, and the Level 3 processing firmware.

- Level 2 (LAPD) Link Looparound

  LAPD is a link level protocol that is used for all system links. This test verifies the health of the processing of these links.

- Broadcast Link Looparound

  Each ISDN BRI port has two associated broadcast signaling links, one for call control and one for maintenance and management. Since these links have separate routing circuitry from the Level 2 Looparound, this test forces a CRC error to verify the CRC hardware associated with the broadcast data path.

- Level 3 Link Looparound

  Level 3 Links support the X.25 Data Phase protocol used with the Packet Gateway to support X.25 links such as those used for AUDIX. This test verifies the health of the Level 3 firmware. Since soft errors are possible, the Packet Interface retries the test before reporting an error.

These tests are also run as part of the reset tests. If the Level 2 or Level 3 looparound test fail as background tests, a “fatal error” message will be sent to the Packet Interface maintenance software and the Packet Interface will be put in the “out-of-service” state. Therefore, it is expected that the repair procedures associated with Abort Code 1137 (out-of-service) would normally be followed when failures with the Level 2 and Level 3 tests occur.

Test #885 executes differently depending on which instance of Packet Interface is tested:

1. Packet Interface 1 (TDM Bus-based) - No hardware is tested. Only operational firmware is tested.
2. Packet Interface 2 (Packet Bus-based) - All three tests are executed.

Table 10-485. TEST #885 Private Looparound Tests

Error Code	Test Result	Description/Recommendation
1006 1137	ABORT	Packet Interface is in the out-of-service state so normal maintenance tests will not run on it. 1. Request a Packet Interface reset using **reset packet-interface CS**. Refer to the Packet Interface Reset Test (#889) repair procedures for further action.
1334	ABORT	The Packet Interface command queue is full. This should be a temporary condition caused by a high rate of commands being sent to a Packet Interface. Continued operation with a full command queue will cause a system WARM restart that may escalate to more severe restart levels. 1. Retry the command at 10-second intervals, a maximum of 5 times.

Continued on next page

Table 10-485. TEST #885 Private Looparound Tests — *Continued*

Error Code	Test Result	Description/Recommendation
1338	ABORT	The test is not allowed to run since a planned SPE interchange is in progress. A planned interchange may be caused by 24 hour scheduled testing. During this time the terminal will be held out of service but it should recover automatically after 3 minutes. 1. Wait 3 minutes and retry the command.
1339	ABORT	The test could not run on a standby Packet Interface because the standby SPE is unavailable. 1. Refer to the STBY-SPE maintenance documentation for information on why a standby SPE may be unavailable and what repair actions should be taken. The **status syst 1**screen indicates the state of the standby SPE. Unavailability may be caused by a variety of reasons, such as the setting the SPE-SELECT switches on the DUPINT circuit packs to the position of the active SPE, a failure of the DUPINT circuit pack, or loss of power on the standby SPE. The `SPE SELECT SWITCH field` on the statu**s syst 1** screen displays `spe a` or `spe b` if the SPE-SELECT switches are in the a or b position, respectively.
2000	ABORT	Response to the test request was not received within the allowable time period. Retry the command at 1-minute intervals, a maximum of 3 times.
2500	ABORT	Internal system error 1. Retry the command.
	NO BOARD	The Packet Interface is not detected as being physically present. 1. Reboot the system, then retry the command. If the NO BOARD indication persists, replace the TN2401/TN794 NetPkt circuit pack.
1	FAIL	The Private Link Broadcast looparound test failed. The Packet Interface will enter a fatal fault state when this occurs and the Packet Interface Maintenance software should put the Packet Interface in a out-of-service state. Therefore by the time further action is taken, it is expected that the test will abort with ABORT code 1137 and a demand reset should be used to test the Packet Interface. 1. Reset the Packet Interface using the **reset packet-interface CS** command. Refer to the repair procedures for the Packet Interface Reset Test (#889) for further action. 2. If the test continues to fail, replace the TN2401/TN794 NetPkt circuit pack.

Continued on next page

Table 10-485. TEST #885 Private Looparound Tests — *Continued*

Error Code	Test Result	Description/Recommendation
2	FAIL	The Private Level 2 looparound test failed. The Packet Interface will enter a fatal fault state when this occurs and the Packet Interface Maintenance software should put the Packet Interface in a out-of-service state. Therefore by the time further action is taken, it is expected that the test will abort with ABORT code 1137 and a demand reset should be used to test the circuit pack. 1. Reset the Packet Interface using the **reset packet-interface CS** command. Refer to the repair procedures for the Packet Interface Reset Test (#889) for further action. 2. If the test continues to fail, replace the TN2401/TN794 NetPkt circuit pack.
3	FAIL	The Private Link Level 3 looparound test failed. The Packet Interface may still be operational. 1. Retry the command. 2. If the test continues to fail with the same error code: a. If the system is not equipped with the High Reliability or Critical Reliability Configuration replace the TN2401/TN794 NetPkt circuit pack. b. If the system is equipped with the High Reliability or Critical Reliability Configuration and if the Packet Interface is on the standby SPE, replace the TN2401/TN794 NetPkt circuit pack on the standby SPE. c. If the system is equipped with the High Reliability or Critical Reliability Configuration and if the Packet Interface is on the active SPE, 3. Perform a planned SPE interchange by entering the command **reset system interchange**, and retry the test command. 4. If the test of the Packet Interface on the standby SPE continues to fail, replace the standby TN2401/TN794 NetPkt circuit pack.

Continued on next page

Table 10-485. TEST #885 Private Looparound Tests — *Continued*

Error Code	Test Result	Description/Recommendation
	PASS	All the private looparound tests passed. The Packet Interface is functioning properly. If the system is still unable to place calls on cabinets other than the SPE cabinet, then: 1. Display the error log (**display errors**) and check for errors on the Packet Bus and Maintenance/Test circuit pack. Clear those errors first. 2. Check all other circuit packs connected to the Packet Bus in the same cabinet. Packet Bus failures are likely to be caused by a faulty circuit pack connected to the backplane or bent pins on the back plane. Refer to the PKT-BUS maintenance documentation for repair procedures.

Maintenance Looparound Test (#886)

This test checks whether the Packet Interface can send and receive data correctly. It establishes a LAPD link from a Packet Interface back to the same Packet Interface and transmits and receives test data over that testing link. While timing signals from the Packet Bus are used for the data transfer, the data itself is looped around on the TN2401/TN794 NetPkt circuit pack at the interface to the Packet Bus and does not get sent over the Packet Bus. *This test is run only on the second instance of Packet Interface on the TN2401/TN794 NetPkt, since the first instance cannot use the Packet Bus.*

NOTE:
This test is not run if the Packet Interface is on a standby SPE in a system equipped with duplicated SPEs. However, a failure of the Maintenance Looparound test may have caused an SPE interchange which would result in an alarm associated with the looparound failure error code 769 being reported against a Packet Interface that is currently on the standby SPE. If that is the case, and if all other Packet Interface tests associated with the **test packet-interface CS long** pass, force the standby SPE to go active by using the SPE-SELECT switches. Then enter the **test packet-interface CS** command to run the Maintenance Looparound test to make sure the problem has been cleared.

Table 10-486. TEST #886 Maintenance Looparound Test

Error Code	Test Result	Description/Recommendation
1006 1137	ABORT	Packet Interface is in the out-of-service state so normal maintenance tests will not run on it. 1. Reset the Packet Interface using the **reset packet-interface CS** command. Refer to the Packet Interface Reset Test (#889) maintenance documentation for further action.
1139	ABORT	The Packet Bus is alarmed 1. Try to retire the alarm associated with the Packet Bus. Refer to the Alarm Log through the **display alarms** command. Refer to the maintenance documentation for Packet Bus Maintenance for further action. 2. Retry the command when the alarm associated with the Packet Bus is retired.
1335	ABORT	Internal system error. The Packet Interface is on the standby SPE and this test is not allowed to execute on a Packet Interface on the standby SPE. 1. If you wish to run this test on a standby Packet Interface, you must first make it active with **reset system interchange**. .
1338	ABORT	The test is not allowed to run since a planned SPE interchange is in progress. A planned interchange may be caused by 24 hour scheduled testing. During this time the terminal will be held out of service but it should recover automatically after 3 minutes. 1. Wait 3 minutes and retry the command.
1373	ABORT	Could not establish the link loop around link to run this test. 1. Retry the command at 1-minute intervals, a maximum of 3 times.
2060	ABORT	Packet bus link went down during maintenance looparound test. 1. Retry the command at 1-minute intervals, a maximum of 5 times. 2. If there are errors associated with the Packet Bus, refer to the maintenance information associated with the Packet Bus.
2100	ABORT	Could not allocate the necessary system resources to run this test. 1. Retry the command at 1-minute intervals, a maximum of 5 times.

Continued on next page

Table 10-486. TEST #886 Maintenance Looparound Test — *Continued*

Error Code	Test Result	Description/Recommendation
2500	ABORT	Internal system error 1. Retry the command at 1-minute intervals, a maximum of 5 times.
	NO BOARD	The Packet Interface is not detected as being physically present. 1. Reboot the system, then retry the command. If the NO BOARD indication persists, replace the TN2401/TN794 NetPkt circuit pack.
1-3	FAIL	The test failed. Maintenance was unable to establish a looparound link from the Packet Interface back to itself or was unable to receive data that was sent out over one side of the looparound link. 1. Issue the test packet-interface CS command to retry the test. If the same error code is observed, background maintenance software will automatically attempt to reset the circuit pack and clear the problem. 2. Retry the command and if the test fails, replace the TN2401/TN794 NetPkt circuit pack. 3. If the test continues to fail after replacing the TN2401/TN794 NetPkt circuit pack, run the **test packet P long** command. If any of the tests fail, the fault may be on the Packet Bus. Refer to the PKT-BUS (Packet Bus) Maintenance documentation for recommended repair procedures. 4. If the test continues to fail after the TN2401/TN794 NetPkt circuit pack is replaced and with no other alarms associated with the Packet Bus or circuit packs connected to the Packet Bus, follow normal escalation procedures.
	PASS	This test passed. The Packet Interface and its interface with the SPE are functioning properly. If the system is unable to place calls on cabinets other than the SPE cabinet, then: 1. Check for errors on the Packet Bus and Maintenance/Test circuit pack. Solve those errors first. 2. Check all other circuit packs connected to the Packet Bus in the same cabinet. Packet Bus failures are likely to be caused by a faulty circuit pack connected to the backplane or bent pins on the back plane. 3. Check the TN2401/TN794 NetPkt circuit pack connections to the Packet Bus.

Read and Clear Board Counters (#887)

This test involves sending commands to read on-circuit pack error counters on the TN2401/TN794 NetPkt circuit pack. It also verifies the message interface between the SPE and the Packet Interface.

This test checks different counters depending on whether the Packet Interface is on the active or standby SPE.

If the Packet Interface is on the active SPE, this test reads and clears the Parity Error counter and FIFO Overflow counter. Those counters are not used when a Packet Interface is in standby mode.

If the Packet Interface is on the standby SPE, this test reads but does not clear the Translation RAM counter. The Translation RAM counter is not cleared since the number of bad translations RAM locations indicates bad locations that cannot be used. For a Packet Interface on the active SPE, information about the number of bad Translation location is sent to maintenance software as an in-line error from the circuit pack so it is not necessary to read a counter location.

Table 10-487. TEST #887 Read and Clear Board Counters

Error Code	Test Result	Description/Recommendation
1006 1137	ABORT	Packet Interface is in the out-of-service state so normal maintenance tests will not run on it. 1. Reset the Packet Interface using the **reset packet-interface CS** command. Refer to the Packet Interface Reset Test (#889) maintenance documentation for repair procedures.
1338	ABORT	The test is not allowed to run since a planned SPE interchange is in progress. A planned interchange may be caused by 24 hour scheduled testing. During this time the terminal will be held out of service but it should recover automatically after 3 minutes. 1. Wait 3 minutes and retry the command.

Continued on next page

Table 10-487. TEST #887 Read and Clear Board Counters — *Continued*

Error Code	Test Result	Description/Recommendation
1339	ABORT	The test could not run on the standby Packet Interface because the standby SPE is unavailable. 1. Refer to the STBY-SPE maintenance documentation for information on why a standby SPE may be unavailable and what repair actions should be taken. The **status syst 1**screen indicates the state of the standby SPE. Unavailability may be caused by a variety of reasons, such as the setting the SPE-SELECT switches on the DUPINT circuit packs to the position of the active SPE, a failure of the DUPINT circuit pack, or loss of power on the standby SPE. The `SPE Select Switch` field on the **status syst 1** screen will display `spe a` or `spe b` if the SPE-SELECT switches are in the a or b position, respectively.
2000	ABORT	Response to the test request was not received within the allowable time period. Retry the command at 1-minute intervals, a maximum of 3 times.
2500	ABORT	Internal system error 1. Retry the command.
	NO BOARD	The Packet Interface is not detected as being physically present. 1. Reboot the system, then retry the command. If the NO BOARD indication persists, replace the TN2401/TN794 NetPkt circuit pack.

Continued on next page

Table 10-487. TEST #887 Read and Clear Board Counters — *Continued*

Error Code	Test Result	Description/Recommendation
256 512 768	FAIL	The Packet Interface on the active SPE has an error counter set. The following error codes are possible: 256: Parity error 512: FIFO overflow 768: Parity error and FIFO overflow error 1. If error code 256 or 768 is reported the Packet Interface received a parity error off the Packet Bus. a. First check for alarms logged against the Packet Bus. Refer to the PKT-BUS maintenance documentation to clear those errors first. b. Then check for alarms and errors logged against other circuit packs connected to the Packet bus in the Processor Port Network cabinet. A list of packet circuit packs is presented in the first section of this repair procedure. Refer to the repair procedures for those circuit packs, in this manual, to clear those errors first. c. If the system is not equipped with the High Reliability or Critical Reliability Configuration, replace the TN2401/TN794 NetPkt circuit pack at a time that would cause the least disruption of service. The circuit pack is still functional but should be replaced. d. If the system is equipped with the High Reliability or Critical Reliability Configuration and if the Packet Interface is on the standby SPE, replace the standby TN2401/TN794 NetPkt circuit pack. e. If the system is equipped with the High Reliability or Critical Reliability Configuration and if the Packet Interface is on the active SPE, perform a planned SPE interchange by entering the command **reset system interchange**. Replace the TN2401/TN794 NetPkt circuit pack on the standby SPE.

Continued on next page

Table 10-487. TEST #887 Read and Clear Board Counters — *Continued*

Error Code	Test Result	Description/Recommendation
256 512 768	FAIL *(cont'd.)*	2. If error code 512 or 768 is reported for a Packet Interface on an **active SPE**, the receive FIFO in the Packet Interface has overflowed. This may be an indication that additional Packet Interface capacity is required. For the current hardware configuration, only two Packet Interfaces are provided, so the problem should be escalated if the repair steps presented below do not correct the problem. Retry the command after a one minute delay and if the test continues to fail: a. If the system is equipped with the High Reliability or Critical Reliability Configuration and if the Packet Interface is on the active SPE, perform a planned SPE interchange by entering the command **reset system interchange**. Replace the TN2401/TN794 NetPkt circuit pack b.) Otherwise, (the system is not equipped with the High Reliability or Critical Reliability Configuration) replace the TN2401/TN794 NetPkt circuit pack at a time that would cause the least service disruption. 3. If error code 512 or 768 is reported for a Packet Interface on a standby SPE, replace the standby TN2401/TN794 NetPkt circuit pack.
1024- 1096	FAIL	The Packet Interface on the standby SPE has bad Translation RAM locations. A MINOR alarm is generated when the number of bad locations is from 1 and 4. A MAJOR alarm is generated if the number of bad locations is 5 or more. The MAJOR alarm prevents a planned SPE interchange. (A planned interchange may be administered to occur automatically every 24 hours or it may be requested by using the **reset system interchange** command.) 1. If a MAJOR alarm is associated with this error, replace the alarmed Packet Interface's TN2401/TN794 NetPkt circuit pack. 2. If a MINOR alarm is associated with this error, replace the alarmed Packet Interface's TN2401/TN794 NetPkt circuit pack at a time that would cause the least disruption to service.
	PASS	The SPE is able to communicate with the Packet Interface. If problems are still reported on the Packet Interface, check for failures using the Private Looparound test (#885) and Maintenance Looparound test (#886).

Active-Standby Peer Link Test (#888)

The Active-Standby Peer Link Test is only run in a system equipped with the High Reliability or Critical Reliability Configuration. It verifies that the Peer Link can be set up between the active and standby SPEs. The Peer Link is a link set up across the Packet Bus between the Packet Interfaces on the active and standby SPEs. It is used for forwarding data and control messages between the active and standby SPE in preparation for a planned SPE interchange. This test not only checks the operation of setting up a Peer Link but it also verifies that the active and standby Packet Interfaces can communicate over the Packet Bus.

This test is run against the standby Packet Interface although it checks functionality on both the active and standby Packet Interfaces.

Table 10-488. TEST #888 Active-Standby Peer Link Test

Error Code	Test Result	Description/Recommendation
1006 1137	ABORT	Packet Interface is in the out-of-service state so normal maintenance tests will not run on it. 1. Reset the Packet Interface using the **reset packet-interface CS** command. Refer to the Packet Interface Reset Test (#889) repair procedures for further action.
1139	ABORT	The Packet Bus is alarmed. 1. Try to retire the alarm associated with the Packet Bus. Refer to the Alarm Log through the **display alarms** command. Refer to the PKT-BUS Packet Bus maintenance documentation for further action. 2. Retry the command when the alarm associated with the Packet Bus is retired.
1336	ABORT	Internal system error. 1. If you wish to run this test on the standby Packet Interface, you must first make it active with **reset system interchange**.
1338	ABORT	The test is not allowed to run since a planned SPE interchange is in progress. A planned interchange may be caused by 24 hour scheduled testing. During this time the terminal will be held out of service but it should recover automatically after 3 minutes. 1. Wait 3 minutes and retry the command.

Continued on next page

Table 10-488. TEST #888 Active-Standby Peer Link Test — *Continued*

Error Code	Test Result	Description/Recommendation
1339	ABORT	The test could not run on the standby Packet Interface because the standby SPE is unavailable. 1. Refer to the STBY-SPE maintenance documentation for information on why a standby SPE may be unavailable and what repair actions should be taken. The **status syst 1**screen indicates the state of the standby SPE. Unavailability may be caused by a variety of reasons, such as the setting the SPE-SELECT switches on the DUPINT circuit packs to the position of the active SPE, a failure of the DUPINT circuit pack, or loss of power on the standby SPE. The `SPE SELECT SWITCH` field on the status syst 1 screen displays `spe a` or `spe b` if the SPE-SELECT switches are in the a or b position, respectively.
2000	ABORT	Response to the test request was not received within the allowable time period. Retry the command at 1-minute intervals, a maximum of 3 times.
2500	ABORT	Internal system error 1. Retry the command.
	NO BOARD	The Packet Interface is not detected as being physically present. 1. Reboot the system, then retry the command. If the NO BOARD indication persists, replace the TN2401/TN794 NetPkt circuit pack.

Continued on next page

Table 10-488. TEST #888 Active-Standby Peer Link Test — *Continued*

Error Code	Test Result	Description/Recommendation
1	FAIL	Peer link setup between the active and standby Packet Interfaces failed. 1. Use the **display alarms** command to display the active alarms. If there are any errors associated with the Packet Bus, refer to the PKT-BUS maintenance documentation to clear the Packet Bus problems first. 2. Retry the test command after a one minute delay. 3. If the test continues to fail, replace the TN2401/TN794 NetPkt circuit pack on the standby SPE. 4. If the test continues to fail: a. Use the **display alarms** command to display the active alarms. Verify that there are no alarms on the standby SPE components other than the PKT-INT alarms for the Peer Link failure. If there are other alarms for SPE components, clear those alarms first. b. Initiate an SPE interchange by moving the SPE SELECT switches on the DUPINT circuit packs to the position corresponding to the carrier location of the standby SPE. This causes an SPE interchange using a WARM restart, assuming refresh is complete. Established calls are not disconnected. c. Replace the TN2401/TN794 NetPkt circuit pack on the standby SPE and restore the SPE SELECT switches to their neutral position.

Continued on next page

Table 10-488. TEST #888 Active-Standby Peer Link Test — *Continued*

Error Code	Test Result	Description/Recommendation
2	FAIL	No response from the active Packet Interface to a request to the Packet Interface on the active SPE for peer link setup between the active and standby Packet Interfaces. 1. Retry the test command after a one minute delay. 2. If the test continues to fail: a. Use the **display alarms** command to display the active alarms. Verify that there are no alarms on the standby SPE components other than the alarm for the Peer Link failure. If there are, clear those alarms first. b. Initiate an SPE interchange by moving the SPE SELECT switches on the DUPINT circuit packs to the position corresponding to the carrier location of the standby SPE. This will cause an SPE interchange using a WARM restart. Established calls will not be disconnected. c. Replace the TN2401/TN794 NetPkt circuit pack on the standby SPE and restore the SPE SELECT switches to their neutral position.
	PASS	The SPE is able to communicate with the Packet Interface. If problems are still reported, check for errors on the Private Looparound Tests (#885) and Maintenance Looparound Tests (#886).

Reset Test (#889)

The reset action initializes the Packet Interface and causes the Packet Interface firmware on the TN2401/TN794 NetPkt circuit pack to run a comprehensive set of diagnostic tests.

The demand reset action aborts if the specified Packet Interface is on an active SPE (versus a standby SPE) and if that Packet Interface is in the in-service state.

A Packet Interface is put in the out-of-service state automatically if it has been reset 4 times by background maintenance within the last 15 minutes, independent of the results of the reset action.

If the system is equipped with the High Reliability or Critical Reliability Configuration and if the Packet Interface is on the standby SPE, the demand reset action runs independently of the service state of the Packet Interface.

Table 10-489. TEST #889 Reset Test

Error Code	Test Result	Description/Recommendation
1334	ABORT	The Packet Interface command queue is full. This should be a temporary condition caused by a high rate of commands being sent to a Packet Interface. Continued operation with a full command queue will cause a system WARM restart that may escalate to more severe restart levels. 1. Retry the command at 10 second intervals, a maximum of 5 times.
1338	ABORT	The test is not allowed to run since a planned SPE interchange is in progress. A planned interchange may be caused by 24 hour scheduled testing. During this time the terminal will be held out of service but it should recover automatically after 3 minutes. 1. Wait 3 minutes and retry the command.
1339	ABORT	The test could not run on the standby Packet Interface because the standby SPE is unavailable. 1. Refer to the STBY-SPE maintenance documentation for information on why a standby SPE may be unavailable and what repair actions should be taken. The **status syst 1**screen indicates the state of the standby SPE. Unavailability may be caused by a variety of reasons, such as the setting the SPE-SELECT switches on the DUPINT circuit packs to the position of the active SPE, a failure of the DUPINT circuit pack, or loss of power on the standby SPE. The `SPE SELECT SWITCH` field on the status syst 1 screen displays `spe a` or `spe b` if the SPE-SELECT switches are in the a or b position, respectively.
1347	ABORT	A Packet Interface on the standby SPE is in an uninstalled state even though it is physically present. 1. Use the **status packet-interface** command to determine the service state of the Packet Interface. If the state is not “uninstalled,” follow normal escalation procedures. 2. Remove and restore power to the standby SPE carrier. 3. If there is an alarm against PKT-INT, replace the TN2401/TN794 NetPkt circuit pack and retry the command.
1362	ABORT	The Reset test is not allowed to run because the Packet Interface is in service. Resetting a Packet Interface circuit pack that is in-service on an active SPE is not allowed since this is a destructive test. 1. Use the **status packet-interface** command to determine the service state of the Packet Interface. If the state is “out-of-service,” try the Reset command again.

Continued on next page

Table 10-489. TEST #889 Reset Test — *Continued*

Error Code	Test Result	Description/Recommendation
2000	ABORT	Response to the test request was not received within the allowable time period. 1. Retry the command at 1-minute intervals, a maximum of 3 times.
2500	ABORT	Internal system error 1. Retry the command.
	NO BOARD	The Packet Interface circuit pack is not detected as being physically present. 1. Reboot the system, then retry the command. If the NO BOARD indication persists, replace the TN2401/TN794 NetPkt circuit pack.
5001	FAIL	The TDM clock on the Processor Port Network has failed. 1. Refer to the TDM-CLK to clear this failure.
5002	FAIL	The Packet Bus on the Processor Port Network has failed. 1. Refer to PKT-BUS to clear this failure.
Any Other Than Those Listed Above	FAIL	The Packet Interface diagnostic tests failed. If the system is equipped with the High Reliability or Critical Reliability Configuration, the reset will run only on demand if the Packet Interface is on the standby SPE or if Packet Interface is in an out-of-service state on the active SPE (which means an SPE interchange was not allowed because the standby SPE is not healthy). If the latter case is true, also refer to the repair procedures for STBY-SPE for clearing the problem on the standby SPE. 1. Retry the command **reset packet-interface** 2. If the reset fails, replace the TN2401/TN794 NetPkt circuit pack.
	PASS	The Packet Interface diagnostic software passed. The Packet Interface is put back into service automatically.

PMS-LINK (Property Management System Link)

MO Name (in Alarm Log)	Alarm Level	Initial Command to Run	Full Name of MO
PMS-LINK	MINOR	test pms l	PMS Link
PMS-LINK	WARNING	test pms	PMS Link

Property Management System (PMS) is a stand-alone computer system that a hotel/motel-type and a hospital-type environment use for services such as reservations, registration, messaging, housekeeping, night audit, billing, and inventory. The PMS Link provides a communications channel between Avaya DEFINITY Server and a customer-owned PMSs so that the PMS can interrogate the system about the information related to the following features:

- Message Waiting Notification
- Controlled Restriction
- Housekeeping Status
- Check-in/Check-out
- Room Change/Room Swap

The PMS Link is administered to a data extension that provides a standard EIA 232C interface to the PMS. A PMS can be connected through a data module (PDM, MPDM, DTDM) and a port on the TN754 or TN754B Digital Line circuit pack, or through an ADU and a port on the TN726 Digital Line circuit pack. A PMS can also be connected via a TCP/IP link to a port on the TN799 CLAN circuit pack.

PMS Link Maintenance provides a strategy for maintaining the link between Avaya DEFINITY Server and a PMS device. The strategy includes a set of tests for periodic diagnosis, detection of errors during normal operation, actions for troubleshooting, and raising alarms for serious problems. PMS Link Maintenance uses a “try-and-wait” mechanism for maintaining the PMS Link. If a PMS Link is torn down due to an error, PMS Link Maintenance attempts to bring up the link immediately. If the trial of “Link Setup” fails, PMS Link Maintenance waits for five minutes before the next retry. If the number of retries reaches the value of a threshold (12), a Minor alarm is raised for service attention.

PMS Link Maintenance does not cover the maintenance of the elements composing the PMS physical link [the external PMS device, Data Module (PDM/MPDM/DTDM), and Digital Line Port of TN754 or TN754B Digital Line circuit pack, ADU and Data Line Port of TN726 Data Link circuit pack, and Data Channels on TN777 Network Control circuit pack]. If PMS Link Maintenance cannot restore the PMS Link, then the maintenance tests of these individual components of the PMS Link must be executed to diagnose faults. If system technician-demanded **test pms-link** command fails, no alarm is generated.

Procedures for Restoring the PMS Link

1. Determine the status of the PMS Link.

   Enter **status pms** command and make sure that the PMS Link is not busied out for maintenance. If the link is “down,” then continue with the next step.

2. Where does the PMS Link connect?

   Enter **display system hospitality** and find out the destinations of the PMS Link.

3. Determine the status of the data extension.

   Enter **status data <extension>** command and verify whether the data extension is in in-service/idle state. If the data extension is NOT available, then look for the extension number in Alt Name field of Hardware Error Log. Refer to the XXX-BD (Common Port Circuit Pack) Maintenance documentation for resolutions.

4. Is a data channel on Network Control circuit pack in in-service/idle state?

   Enter **list data** command and find out the extension numbers of data channels on Network Control circuit pack. Enter **status data <extension>** command and make sure that at least one data channel is in in-service/idle state. If no data channel is available, then look for DATA-CHL/DATA-CON/DATA-BD errors in the Hardware Error Log. If present, refer to the DATA-BD (Network Control Circuit Pack) Maintenance documentation; if not present, escalate the error.

5. Is the external PMS device available?

   Make sure that the PMS device is ON-LINE and ready for service. Check the physical connectivity between Data Module and the PMS device.

It is recommended that you busy out the PMS Link before executing maintenance tests over objects composing the PMS Link. If the PMS Link is busied out, then all PMS Link maintenance actions are deactivated. The interference to tests of other MO is off.

Hardware Error Log Entries and Test to Clear Values

PMS Link Maintenance Error Log Entries

Error Type	Aux Data	Associated Test	Alarm Level	On/ Off Board	Test to Clear Value
0[1]	0	Any	Any	Any	test pms sh r 1
18 (a)	0	busyout pms-link	WARNING	OFF	release pms-link
257 (b)	0-6, 99, 255	Link Retry Test (#215)	MINOR/ WARNING[2]	OFF	test pms-link l
513 (c)	0-6,255	None			test pms-link
769 (d)	0-6,255	None			
1025 (e)	4x[3]	None			
1281 (f)	1x[3]	None			
1537 (g)	Nx[3]	None			
1793 (h)	0-6,255	None			test pms-link
2049 (i)	0-6,255	None			
2305 (j)	5x[3]	None			release pms-link or test pms-link
2561 (k)	0-6,255	None			test pms-link
2817 (l)	10x[3] 20x[3] 30x[3]	None			
3073 (m)	7x[3]	None			
3841 (n)	2x[3]	None			

1 Run the Short Test Sequence first. If all tests pass, run the Long Test Sequence. Refer to the appropriate test description and follow the recommended procedures.

2 Minor alarms on this MO may be downgraded to Warning alarms based on the value used in the **set options** command.

3 Is any integer.

Notes:

a. The PMS Link has been busied out for system technician-demanded maintenance via the **busyout pms-link** command. The link is torn down. Enter the **release pms-link** command to restore the link.

b. The Link Retry Test (#215) fails. The Aux Data field contains either the Channel ID of Data Channels on Network Control circuit pack (that is, 3 for Channel 01, 4 for Channel 02, 5 for Channel 03, 6 for Channel 04) or an Error Type of 99 indicating no data channels are available for setting up the link, or an Error Type of 255 for the internal system error generated upon initialization or power-up. Refer to the ''Procedures for Restoring the PMS Link'' section for resolution.

c. The PMS physical link is down due to the following causes: cable to the PMS device is disconnected; the PMS device is powered off; or the data extension to which the PMS device connects has been busied out. The Aux Data field contains the Channel ID of Data Channels on Network Control circuit pack (that is, 3 for Channel 01, 4 for Channel 02, 5 for Channel 03, 6 for Channel 04) or an Error Type of 255 for the internal system error generated upon initialization or power-up. Check the connectivity of wire and cable among wall jacket, data module, and the PMS device. Enter **status data <extension>** and verify that the data extension of the PMS device is in in-service/idle state. If the data extension is not available, then refer to the ''Procedures for Restoring the PMS Link'' section for recommended repair strategy.

d. No communication between DEFINITY Generic 1 or Generic 3iV2 and PMS for a period of time (the time is specified in “system hospitality” administration). The PMS Link is torn down. To clear this error, refer to the ''Procedures for Restoring the PMS Link'' section.

e. The link was taken down because the switch could not receive an incoming message from the PMS. The message from the PMS repeatedly had corrupted data or the switch received requests for acknowledgment but never received a message to be processed. If this error type recurs frequently (that is, more than once a month), then advise the customer to call the vendor of the PMS to check out the PMS device. Once the PMS Link is successfully established, this error disappears from the Hardware Error Log.

f. The link was taken down because the switch could not send an outgoing message. The message, which was sent but not acknowledged, was flushed. If this error type recurs frequently (that is, more than once a month), then advise the customer to call the vendor of the PMS to check out the PMS device. Once the PMS Link is successfully established, this error disappears from the Hardware Error Log.

g. The PMS has been busied out for maintenance at the request of the PMS. The PMS Link is torn down. The reason code (N), if present, is that supplied by the PMS in the request message. If this error type recurs frequently (that is, more than once a month), then advise the customer to call the vendor of the PMS to check out the PMS device. Once the PMS Link is successfully established, this error disappears from the Hardware Error Log. No alarm is raised against this error.

h. PBX buffer overflows due to either heavy call traffic or PMS protocol message rate being faster than the PMS/PBX protocol specifications allow. The PMS Link is torn down. PMS Link maintenance software waits for five minutes before attempting to set up the link again. If this error type recurs frequently (that is, more than once a month), advise the customer to call the vendor of the PMS to check out the PMS device. Once the PMS Link is successfully established, this error disappears from the Hardware Error Log (see Note).

NOTE:
The PMS should be checked for adherence to message rate defined in the PMS/PBX protocol specifications. No alarm is raised against this error.

i. The attempt to swap the database between PBX and PMS failed three times consecutively due to excessive PMS/PBX protocol violations, buffer overflows, or PMS Link outages. The PMS Link is NOT torn down. If this error type recurs frequently (that is, more than once a month), then advise the customer to call the vendor of the PMS to check out the PMS device. Once the PMS Link is successfully established, this error disappears from the Hardware Error Log. No alarm is raised against this error.

j. The PMS Link has been busied out for system technician-demanded maintenance via the **busyout pms-link** command or has been brought down via the **test pms-link long** command. The PMS Link is torn down, and PMS Link maintenance stops attempting to reestablish the link in the case where the **busyout pms-link** command has been used. When the **test pms-link long** command has been used, PMS Link maintenance continues to try to reset the link. To restore the PMS Link after use of the **busyout pms-link** command, issue the **release pms-link** command. To restore the PMS Link after use of the **test pms-link long** command, issue the **test pms-link** command.

k. The PMS Link is physically established, but the protocol has not been started by the PMS before the protocol timer expires. The PMS Link is NOT torn down. If this error type recurs frequently (that is, more than once a month), advise the customer to call the vendor of the PMS to check out the PMS device. Once the PMS Link is successfully established, this error disappears from the Hardware Error Log.

NOTE:
The PMS should be checked to make sure that it attempts to start the protocol according to the PMS/PBX protocol specifications. No alarm is raised against this error.

l. Error Type 2817:

Aux values of concern:

10x	The PMS violated the application protocol. The first message after a request to initiate a database exchange was not the start of a database exchange. The message is processed. If this error type with this aux data value recurs frequently (that is, more than once a month), then advise the customer to call the vendor of the PMS to check out the PMS device. Once the PMS Link is successfully established, this error disappears from the Hardware Error Log. See Note.
20x	The PMS violated the application protocol. The start of a database exchange was received in a state in which it was not expected. The message is ignored. If this error type with this Aux data value recurs frequently (that is, more than once a month), then advise the customer to call the vendor of the PMS to check out the PMS device. Once the PMS Link is successfully established, this error disappears from the Hardware Error Log. See the next Note.
30x	The PMS violated the application protocol. The end of a database exchange was received when no exchange was in progress. The message is ignored. If this error type with this Aux Data value recurs frequently (that is, more than once a month), then advise the customer to call the vendor of the PMS to check out the PMS device. Once the PMS Link is successfully established, this error disappears from the Hardware Error Log. **NOTE:** The PMS should be assessed for adherence to the PMS/PBX protocol specifications. No alarm is raised against this error.

m. The link was taken down by the switch because the threshold for application protocol violations has been exceeded by the PMS. The protocol never started and messages were received and/or messages were received in a state in which they were not expected. (Refer to Error Type 2817 for recommended strategy.)

n. Link was taken down by the switch because the threshold for link protocol violations has been exceeded by the PMS. PMS is sending “garbage” to the switch.

System Technician-Demanded Tests: Descriptions and Error Codes

Always investigate tests in the order presented in the table below when inspecting errors in the system. By clearing error codes associated with the *Link Retry Test*, for example, you may also clear errors generated from other tests in the testing sequence.

Order of Investigation	Short Test Sequence	Long Test Sequence	D/ND[1]
Link Tear Down Test (#213)		X	D
Link Retry Test (#215)	X	X	ND

1 D = Destructive; ND = Nondestructive

Link Tear Down Test (#213)

This test is destructive.

This test disconnects the existing link between the system and the external PMS device. If the link has been disconnected already, then this test just returns "PASS." All resources allocated for a PMS Link are released after this test.

Table 10-490. TEST #213 Link Tear Down Test

Error Code	Test Result	Description/Recommendation
40 50	ABORT	Internal System Error. 1. Retry the command at one-minute intervals a maximum of 5 times.
1010	ABORT	The PMS Link has been busied out and placed in the out-of-service state. 1. Enter **release pms-link** command to release the PMS Link from busyout state. 2. Retry **test pms long** command to execute the test.
	FAIL	Internal System Error. 1. Retry the command at one-minute intervals a maximum of 5 times.
	PASS	The PMS Link is torn down.

Link Retry Test (#215)

This test sends a message to the PMS software process to make a data call to the extension where the PMS device connects. If the PMS Link is already up, then this test passes without making any data call.

Table 10-491. TEST #215 Link Retry Test

Error Code	Test Result	Description/Recommendation
10 20	ABORT	Internal System Error. 1. Retry the command at one-minute intervals a maximum of 5 times.
30	ABORT	Internal System Error. 1. Refer back to the "Procedures for Restoring the PMS Link" section for resolution.
1010	ABORT	The PMS Link has been busied out and placed in the out-of-service state. 1. Enter **release pms-link** command to release the PMS Link from busyout state. 2. Retry **test pms** command to execute the test.
	FAIL	The PMS Link CANNOT be established. 1. Refer back to the "Procedures for Restoring the PMS Link" section for restoring the PMS Link.
	PASS	The PMS Link is up.

PMS-PRNT/JNL-PRNT (PMS Printer Link)

MO Name (in Alarm Log)	Alarm Level	Initial Command to Run	Full Name of MO
PMS-PRNT/JNL-PRNT	MINOR	test journal pms-log/wakeup-log l	PMS Printer/ Journal Printer
PMS-PRNT/JNL-PRNT	WARNING	test journal pms-log/wakeup-log	PMS Printer/ Journal Printer

NOTE:
PMS-PRNT stands for the pms-log printer. JNL-PRNT stands for the wakeup-log printer. Since the maintenance strategy for the both the JNL-PRNT and PMS-PRNT MOs is the same, both of these MOs are described in this section.

In DEFINITY Generic 1 and Generic 3iV2, there are up to two journal printers. They are identified as the wakeup-log printer which is shared between the Automatic Wakeup feature and the Emergency Access to Attendant feature to print scheduled reports and log of events, and the pms-log printer which is used as a backup of the PMS output device to print the audit trail data of all PMS transactions executed by the system and the PMS Housekeeping Status Change events while the PMS Printer Link is not available. The journal printer link is administered to a data extension that provides a standard EIA 232C interface to the printer. The printer can be connected through a data module (PDM, MPDM, DTDM) and a port on the TN754 or TN754B Digital Line circuit pack, or through an ADU and a port on the TN726 Data Line circuit pack.

PMS Printer Link Maintenance provides a strategy in the system for maintaining the link between the system and a PMS device (an external Journal Printer device). The strategy includes a set of tests for periodic diagnosis, detection of errors during normal operation, actions for troubleshooting, and raising alarms for serious problems. PMS Printer Link Maintenance uses a try-and-wait mechanism for maintaining the PMS Printer Link. If a PMS Printer Link is torn down due to an error, PMS Printer Link Maintenance intends to bring the link up immediately. If the trial of Link Setup fails, PMS Link Maintenance waits for five minutes before the next retry. If the number of retries reaches the value of a threshold (15), a Minor alarm is raised for service attention.

PMS Printer Link Maintenance does not cover the maintenance of the elements composing the journal printer physical link, for instance, the external printer device, Data Module (PDM/MPDM/DTDM) and Digital Line Port of TN754 or TN754B Digital Line circuit pack, ADU and Data Line Port of TN726 Data Line circuit pack, and Data Channels on TN777 Network Control circuit pack. If PMS Printer Link Maintenance cannot restore the PMS Printer Link, then the maintenance tests of these individual components of the PMS Link must be executed to diagnose faults.

Procedures for Restoring the PMS Printer Link

1. Determine the status of the PMS Printer Link.

   Enter **status journal-printer wakeup-log|pms-log** command and make sure that the journal printer link is not busied out for maintenance. If the link is down, then continue to the next step.

2. Where does the journal printer link connect?

   Enter **display system hospitality** and find out the destinations of the PMS Printer Link.

3. Determine the status of the data extension.

   Enter **status data extension** command and verify whether the data extension is in the in-service/idle state. If the data extension is NOT available, then look for the extension number in Alt Name field of Hardware Error Log. Refer to XXX-BD (Common Port Circuit Pack) Maintenance documentation for resolutions.

4. Is a data channel on Network Control circuit pack in the in-service/idle state?

   Enter **list data** command and find out the extension numbers of data channels on Network Control circuit pack. Enter **status data extension** command and make sure that at least one data channel is in the in-service/idle state. If no data channel is available, look for DATA-CHL/DATA-CON/DATA-BD errors in the Error Log. If present, refer to “DATA-BD”.

5. Is the external printer device available?

   Make sure that the printer device is ON-LINE and ready for service. Check the physical connectivity between Data Module and the printer device.

It is recommended that you busyout the PMS Printer Link before executing maintenance tests over objects composing the PMS Printer Link. If the PMS Printer Link is busied out, then all PMS Printer Link maintenance actions are deactivated. The interference to tests of other MOs is off.

Error Log Entries and Test to Clear Values

Table 10-492. PMS-PRNT/JNL-PRNT Link Maintenance Error Log Entries

Error Type	Aux Data	Associated Test	Alarm Level	On/Off Board	Test to Clear Value
0[1]	0	Any	Any	Any	test journal wakeup-log|pms-log sh
18 (a)	0	busyout journal wakeup-log/ pms-log	WARNING	OFF	release journal wakeup-log|pms-log
257 (b)	0, 3 to 6 255	Link Retry Test (#215)	MINOR/ WARNING[2]	OFF	test journal wakeup-log|pms-log 1
513 (c)	0, 3 to 6 255				test journal wakeup-log|pms-log
769 (d)					

1 Run the Short Test Sequence first. If all tests pass, run the Long Test Sequence. Refer to the appropriate test description and follow the recommended procedures.

Both PMS Printer and Journal Printer are administered to the same extension, and the printer is not connected. Refer to the ''Procedures for Restoring the PMS Printer Link'' section for resolution.

2 Minor alarms on this MO may be downgraded to Warning alarms based on the value used in the **set options** command.

Notes:

a. System Technician busied out the Journal Printer Link. The link is torn down. Enter **release** command to restore the link.

b. Link Retry Test (#215) fails. Physical link cannot be set up, usually because of hardware problems such as power off or cable disconnect. The Aux Data field contains the Channel ID of Data Channels on Network Control circuit pack (that is, 3 for Channel 01, 4 for Channel 02, 5 for Channel 03, 6 for Channel 04), an Error Code 255 for the Internal system error, or 0 which indicates that the data module connected to the PMS Printer Link is out-of-service. Refer to ''Procedures for Restoring the PMS Printer Link'' section for resolution.

c. Physical link cannot be set up, usually because of hardware problems such as power off or cable disconnect. The PMS Printer Link physical link is down due to the following causes: cable to the printer device is disconnected, the printer device is powered off, or the data extension where the printer device connects to has been busied out. The Aux Data field contains the Channel ID of Data Channels on Network Control circuit pack (that is, 3 for Channel 01, 4 for Channel 02, 5 for Channel 03, 6 for Channel 04). Check the connectivity of wire and cable among wall jacket, data module, and the printer device. Enter **status data <extension>** and verify that the data extension of the printer device is in the in-service/idle state. If the data extension is not available, then refer to the "Procedures for Restoring the PMS Printer Link" section for resolution.

d. Link idle timer; link comes down. This error indicates that the printer device is in an off-line state, for example, paper jam or paper out for a printer device. Check the printer device and act promptly to put it back to on-line state. Enter **test journal wakeup-log|pms-log** command to set up the printer link.

System Technician-Demanded Tests: Descriptions and Error Codes

Always investigate tests in the order presented in the table below when inspecting errors in the system. By clearing error codes associated with the *Link Retry Test*, for example, you may also clear errors generated from other tests in the testing sequence.

Order of Investigation	Short Test Sequence	Long Test Sequence	D/ND[1]
Link Tear Down Test (#213)		X	D
Link Retry Test (#215)	X	X	ND

1 D = Destructive; ND = Nondestructive

Link Tear Down Test (#213)

This test is destructive.

This test disconnects the existing link between the system and the external printer device. If the link has been disconnected already, this test just returns PASS. All resources allocated for a PMS Printer Link are released after this test.

Table 10-493. TEST #213 Link Tear Down Test

Error Code	Test Result	Description/Recommendation
40	ABORT	Internal system error
50	ABORT	Internal system error 1. Retry the command at 1minute intervals a maximum of 5 times.
1010	ABORT	The link has been busied out to out-of-service. 1. Enter **release journal wakeup-log|pms-log** command to release the link from busyout state. 2. Retry **test journal wakeup-log|pms-log l** command to execute the test.
	FAIL	Internal system error 1. Retry the command at 1-minute intervals a maximum of 5 times.
	PASS	The link is torn down.

Link Retry Test (#215)

This test sends a message to the journal printer management software process to make a data call to the extension where the printer device connects to. If the journal printer link is already up, this test passes without making any data call.

Table 10-494. TEST #215 Link Retry Test

Error Code	Test Result	Description/Recommendation
10	ABORT	Internal system error
20	ABORT	Internal system error 1. Retry the command at 1-minute intervals a maximum of 5 times.
30	ABORT	Internal system error 1. Refer to the "Procedures for Restoring the PMS Printer Link" section for instructions.
1010	ABORT	The PMS Printer Link has been busied out to out-of-service. 1. Enter **release journal wakeup-log|pms-log** command to release the link from busyout state. 2. Retry **test journal wakeup-log|pms-log l** command to execute the test.
	FAIL	The link CANNOT be established. 1. Refer to the "Procedures for Restoring the PMS Printer Link" section for instructions.
	PASS	The link is up.

POWER (Battery & Battery Charger) for AC-Powered Systems

MO Name (in Alarm Log)	Alarm Level	Initial Command to Run[1]	Full Name of MO
POWER	MINOR	test environment P	Battery & Battery Charger

1 Where P is an appropriate port network number determined via the PORT field from the Alarm or Error Log.

Generic 1 and Generic 3iV2 offer two basic cabinet type configurations: (1) the multicarrier cabinet system and (2) the single-carrier cabinet system. Both cabinet system configuration may be powered by either an external AC or DC power source.

NOTE:
For environment maintenance, PPN or EPN cabinet configuration aspects for a High or Critical Reliability system are irrelevant.

The environment maintenance strategy to be used depends on both the cabinet configuration and the type of powering. Therefore, refer to the following list to find the appropriate section(s).

- For a single-carrier cabinet system, refer to the DC-POWER (Single-Carrier Cabinet Power) Maintenance documentation for environment maintenance strategy.
- For a multicarrier cabinet system using an external AC power source, refer to one or more of the following Maintenance documentation sections: AC-POWER (AC Power) for AC-Powered Systems, CARR-POW (Carrier Port Power Unit) for AC-Powered Systems, or POWER (Battery & Battery Charger) for AC-Powered Systems.
- For a multicarrier cabinet system using an external DC power source, refer to one or more of the following Maintenance documentation sections: AC-POWER (AC Power) for DC-Powered Systems, CARR-POW (Carrier Port Power Unit) for DC-Powered Systems, or POWER (Battery & Battery Charger) for DC-Powered Systems.

The G3iV1.1-286 or G3iV2-386 multicarrier cabinet is equipped with rechargeable batteries that can span short AC power outages. In a multicarrier PPN system with High or Critical Reliability, the cabinet can be powered for 10 seconds from the batteries. After this time, all port carrier power is shed and the control carrier is powered for another 10 minutes. In a High or Critical Reliability PPN system, these times are cut to five seconds and five minutes, respectively. In an EPN multicarrier cabinet, the entire cabinet can be powered for 15 seconds from the batteries, after which time the entire cabinet is powered down.

In a multicarrier cabinet system, the POWER (Battery & Battery Charger) MO represents the battery charger and the battery which are located in the lower left corner of the cabinet. Should anything go wrong with the battery or charger, they must be replaced using the procedure described in ''Replacing the Battery and Battery Charger'' below. The system detects one of the following three problems with the batteries or charger:

1. Reserve Fault—The charger has detected a problem within itself or the batteries and has notified the system.
2. High Charge Rate—The batteries are charging at a high charge rate. This means that batteries with a low charge are being recharged or that a problem may exist with the batteries or the charger.
3. Prepare to Disconnect (Low Battery)—The batteries are in danger of being drained to a point where the batteries would be damaged. This warning often occurs after multiple power failures.

   The batteries take 30 hours to fully charge after being drained. A fully charged battery pack should bridge two power failures without causing a low battery warning to occur.

Replacing the Battery and Battery Charger

Use the procedure below to replace the Battery and Battery Charger:

1. Move the power switch on the battery charger to OFF.

   WARNING:
   Always turn off the battery charger before replacing the batteries. Failure to do so results in damage to the 397B battery charger.

2. Disconnect the cord from the outlet on the front of the battery charger.
3. Remove the screw at the top left of the cover and open the cover to access the charger.
4. Check the battery voltages at the test points. The test points on the CE Distribution Unit check all 3 batteries wired in series (the voltages should read 144 volts, 3X48 volts = 144 volts) .

   NOTE:
   An ordinary voltmeter can be used to check battery voltages at the test points, but it may not produce valid results. If the battery voltage readings are below 48 volts (the voltages at test points should read 144 volts, 3X48 volts = 144 volts), the battery is probably defective. However, a normal voltage reading does not necessarily mean the battery is good; under load, a defective battery with a normal reading on the voltmeter may discharge rapidly.

5. Check the battery dates and replace the batteries if they are more than four years old or if a POWER alarm is present.

   NOTE:
   If any defective batteries are found, replace all of them. Batteries are ordered in sets of three and should be replaced as such.

6. If no defective batteries are found, replace the entire charger.
7. Close the cover and secure it with the screw.
8. Reconnect the cord and move the power switch to ON.

Hardware Error Log Entries and Test to Clear Values

Battery & Battery Charger Error Log Entries

Error Type	Aux Data	Associated Test	Alarm Level	On/Off Board	Test to Clear Value
0[1]	0	Any	Any	Any	test environment P sh r 1
1	Any	Battery & Battery Charger Query Test (#5) (Error Code 8)	MINOR	ON	test environment P sh r 1
257	Any	Battery & Battery Charger Query Test (#5) (Error Code 4)	MINOR	ON	test environment P sh r 1
769	Any	Battery & Battery Charger Query Test (#5) (Error Code 2)	MINOR	ON	test environment P sh r 1
3840	1005 or 1028	Battery & Battery Charger Query Test (#5)		ON	test environment P sh r 1

1 Run the Short Test Sequence first. If all tests pass, run the Long Test Sequence. Refer to the appropriate test description and follow the recommended procedures.

a. Where P is an appropriate port network number determined via the Port field from the Alarm or Error Log.

System Technician-Demanded Tests: Descriptions and Error Codes

Always investigate tests in the order presented in the table below when inspecting errors in the system. By clearing error codes associated with the *Battery & Battery Charger Query Test,* for example, you may also clear errors generated from other tests in the testing sequence. During this test, the status LED on the battery charger is lit and extinguished if the status of the battery charger is reported as normal. This event is a result of checking that the battery charger is connected.

Order of Investigation	Short Test Sequence	Long Test Sequence	D/ ND[1]
Battery & Battery Charger Query Test (#5)	X	X	ND
AC Power Query Test (#78) (a)	X	X	ND
Power Unit Query Test (carrier E) (#127) (b)	X	X	ND
Power Unit Query Test (carrier D) (#127) (b)	X	X	ND
Power Unit Query Test (carrier A) (#127) (b)	X	X	ND
Power Unit Query Test (carrier B) (#127) (b)	X	X	ND
Power Unit Query Test (carrier C) (#127) (b)	X	X	ND
Emergency Transfer Query Test (#124) (c)	X	X	ND
Cabinet Sensors Query Test (#122) (d)	X	X	ND
External Alarm Lead Query Test (#120) (e)	X	X	ND
Analog Ring Generator Initialization Test (#117) (f)	X	X	ND
Analog Ring Generator Query Test (#118) (f)	X	X	ND

1 D = Destructive; ND = Nondestructive

Notes:

a. Refer to AC-POWER (AC Power) Maintenance documentation for a description of this test.

b. Refer to CARR-POW (Carrier Port Power Unit) Maintenance documentation for a description of this test

c. Refer to EMG-XFER (Emergency Transfer) Maintenance documentation for a description of this test.

d. Refer to CABINET (Cabinet Sensors) Maintenance documentation for a description of this test.

e. Refer to EXT-DEV (External Alarm) Maintenance documentation for a description of this test.

f. Refer to RING-GEN (Analog Ring Generator) Maintenance documentation for a description of this test.

NOTE:
This test only shows up in the test sequence if there is a Tone-Clock circuit pack in the port network being tested.

Battery & Battery Charger Query Test (#5)

This test queries the Maintenance/Tape Processor in a multicarrier cabinet PPN system without High or Critical Reliability, the Duplication Interface circuit pack in a PPN for a High or Critical Reliability system, or the EPN Maintenance circuit pack in an EPN for the status of the battery pack and battery charger, and reports the result. During this test, the status LED battery charger is lit and extinguished if the status of the battery charger is reported as normal. This event is a result of checking that the battery charger is connected.

Table 10-495. TEST #5 Battery & Battery Charger Query Test

Error Code	Test Result	Description/Recommendation
1000	ABORT	System resources required to run this test are not available. 1. Retry the command at one-minute intervals a maximum of 5 times.
1005	ABORT	The battery charger is not connected. If the system has a UPS and no battery charger and batteries, ignore this error since the batteries and charger are not required with certain UPSs. 1. Verify that the battery charger is switched on. 2. Unplug one battery. 3. Switch off the charger and remove its white power cord. 4. Verify that the power cord has at least 106 VAC. 5. Verify that the connector on the rear of the charger is properly inserted. 6. Re-insert the charger power cord and switch on the charger. 7. Plug the battery back in. 8. Run the test environment. The batteries will probably need charging and may be drained if there were power outages. Reconnect the battery charger to allow the batteries to recharge. If test #5 is run before the batteries are completely charged, the test will fail with Error Code 2. If Abort 1005 occurs again, escalate the problem. 9. Wait 30 hours and rerun the test.

Continued on next page

Table 10-495. TEST #5 Battery & Battery Charger Query Test — *Continued*

Error Code	Test Result	Description/Recommendation
2000	ABORT	Response to the test request was not received within the allowable time period. 1. Retry the command at one-minute intervals a maximum of 5 times. 2. If the test continues to ABORT with Error Code 2000, check for system powering problems with the A carrier (PPN or EPN). Look for and resolve all AC-POWER and CARR-POW alarms in a multicarrier cabinet system or DC-POWER alarms in a single-carrier cabinet system. Repeat the test. 3. If the test continues to ABORT with a 2000 error code, check for and resolve all DUPINT (Duplication Interface) errors in a Duplicated Option PPN, PR-MAINT (Maintenance/Tape Processor) errors in a standard PPN, or MAINT (EPN Maintenance circuit pack) errors in an EPN. Repeat the test. 4. If the test continues to ABORT with a 2000 error code, escalate the problem.
2028	ABORT	Internal System Error prevented the extinguishing of the Battery Charger status LED. 1. Retry the command at one-minute intervals a maximum of 5 times.
2029	ABORT	Internal System Error. 1. Retry the command at one-minute intervals a maximum of 5 times.

Continued on next page

Table 10-495. TEST #5 Battery & Battery Charger Query Test — *Continued*

Error Code	Test Result	Description/Recommendation
2	FAIL	The system is in nominal power holdover, and the battery is currently so low that the system disconnects power very shortly. 1. If power returns, the port carriers in the PPN should power up again. All the circuit packs should be reinserted, and the system should continue to operate normally. There will probably be a Minor alarm against Battery & Battery Charger because the batteries are recharging. 2. If power does not return, the system shuts down to prevent damage to the batteries. If power is restored, the system reboots. **No manual intervention is required.** 3. Rerun the test. If the test still fails, the PR-MAINT (Maintenance/Tape Processor) in a multicarrier cabinet PPN system without High or Critical Reliability, the DUPINT (Duplication Interface) circuit pack in a PPN for a system with High or Critical Reliability, or the EPN MAINT (Maintenance) circuit pack in an EPN could be reporting this condition incorrectly. Resolve all alarms on these MOs and rerun the test. There are failures that can occur on the Maintenance/Tape Processor, Duplication Interface, and EPN Maintenance circuit pack that ARE NOT be detected by the respective maintenance, but that cause many, if not all, environment tests to fail. If many environment tests are failing, the suspect circuit pack, depending on the system configuration, should be replaced and the test rerun. If the test still fails, follow normal escalation procedures.
4	FAIL	The battery is currently being charged at the high charge rate. 1. After 30 hours, the battery should be fully charged, and this error should disappear. 2. If after 30 hours the battery is still in the high charge rate, an alarm is raised. Display the Error Log with the **display errors** command and select the category “environ” to display only environment-related errors. Look for POWER errors of type 257. The FIRST OCCURRENCE of this error indicates the time when the battery started charging. Use this time as the starting point to determine if the battery has been charging for 30 hours. If the battery has been charging for 30 hours, then replace the battery. **CAUTION:** *Read the section, “Replacing the Battery and Battery Charger” before proceeding.*

Continued on next page

Table 10-495. TEST #5 Battery & Battery Charger Query Test — *Continued*

Error Code	Test Result	Description/Recommendation
4	FAIL *(cont'd.)*	3. If the batteries were replaced, it can take up to 24 hours for the new batteries to be charged (new batteries are shipped uncharged). If Test #5 is run again before the batteries are completely charged, the test fails. If the charger was replaced, some time must be allowed for the new charger to recharge the batteries. Therefore, in either case, wait at least 24 hours and rerun the test. If the test still fails, the PR-MAINT (Maintenance/Tape Processor) in a multicarrier cabinet PPN system without High or Critical Reliability, the DUPINT (Duplication) Interface circuit pack in a PPN for a system with High or Critical Reliability, or the EPN MAINT (Maintenance) circuit pack in an EPN could be reporting this condition incorrectly. There are failures that can occur on the Maintenance/Tape Processor, Duplication Interface, and EPN Maintenance circuit pack that ARE NOT be detected by the respective maintenance, but that cause many, if not all, environment tests to fail. If many environment tests are failing, the suspect circuit pack, depending on the system configuration, should be replaced and the test rerun. Resolve all alarms on these MOs, and rerun the test. If the test still fails, escalate the problem.
6	FAIL	This indicates that Error Codes 2 and 4 have occurred. Refer to these descriptions. Also, refer to the description for Error Code 14 for this test.

Continued on next page

Table 10-495. TEST #5 Battery & Battery Charger Query Test — *Continued*

Error Code	Test Result	Description/Recommendation
8	FAIL	**NOTE:** For a Global AC MCC (J58890CH) use the procedures outlined in step 3. There is a reserve power fault. A problem exists with the battery charger (more probable) or the battery (less probable). Also, this fault could be generated if the charger is switched off or a battery is unplugged. 1. Replace the battery charger or the battery. The fault should disappear. However, the test fails with Error Code 4 if the battery is charging. **WARNING:** *Always turn off the battery charger before replacing the batteries.* 2. Rerun the test. If the test still fails with an error code other than 4 (that is, there is something wrong besides the battery needing charging), the PR-MAINT (Maintenance/Tape Processor) in a multicarrier cabinet PPN system without High or Critical Reliability, the DUPINT (Duplication Interface) circuit pack in a PPN for a High or Critical Reliability, or the EPN MAINT (Maintenance) circuit pack in an EPN could be reporting this condition incorrectly. Resolve all alarms on these MOs and rerun the test. There are failures that can occur on the Maintenance/Tape Processor, Duplication Interface, and EPN Maintenance circuit pack that ARE NOT be detected by the respective maintenance, but that cause many, if not all, environment tests to fail. If many environment tests are failing, the suspect circuit pack, depending on the system configuration, should be replaced and the test rerun. If the test still fails, then follow normal escalation procedures.

Continued on next page

Table 10-495. TEST #5 Battery & Battery Charger Query Test — *Continued*

Error Code	Test Result	Description/Recommendation
		3. Procedures for a Global MCC (J58890CH): a. Look to see if any “red” LEDs are “on” on any of the rectifier modules or the BIU (Battery Interface Unit) located in the Power Distribution Unit (J58890CH). b. If the BTW (Battery Temp Warning) LED on the BIU is “on” check the batteries for a over temp condition[(a)] if temp is normal[(a)] replace the BIU, If the test still fails replace the battery in a small battery system. For a large battery system escalate the problem. c. If the BIF (Battery Interface Unit) LED is “on” replace the battery interface unit. d. If the BNA (Battery Not Available) LED is “on” check the battery connections including connector J20.
8 *(cont'd.)*	FAIL *(cont'd.)*	e. If you have an alarm and all LEDs are ok (PWR OK and BOK) on the rectifier modules, and the BIU (Battery Interface Unit), make sure the BIU and the RM0850 rectifiers are seated properly (plugged in). If the BOK LED on the BIU is ok use the following information to check the number of rectifiers serving this cabinet: Number of carriers per cabinet ---------- Number of rectifiers per cabinet 1 — 2 2 — 3 3 — 3 4 — 4 5 — 4 If the number of rectifiers is correct replace the maintenance circuit pack in the EPN or PPN. 4. If the test still fails, then follow normal escalation procedures.
10	FAIL	This indicates that Error Codes 2 and 8 have occurred. Refer to these descriptions. Also, refer to the description for Error Code 14 for this test.
12	FAIL	This indicates that Error Codes 4 and 8 have occurred. Refer to these descriptions. Also, refer to the description for Error Code 14 for this test.

Continued on next page

Table 10-495. TEST #5 Battery & Battery Charger Query Test — *Continued*

Error Code	Test Result	Description/Recommendation
14	FAIL	This indicates that Error Codes 2, 4, and 8 have occurred. Refer to these descriptions. **NOTE:** This could also indicate that the detection logic on the DUPINT (Duplication Interface), PR-MAINT (Maintenance/Tape Processor), or EPN MAINT (Maintenance) circuit pack is defective. Such an error will not be detected by the respective maintenance. If many environment tests are failing, replace the suspect circuit pack (depending on system configuration).
	PASS	The Maintenance/Tape Processor in a multicarrier cabinet PPN system without High or Critical Reliability, the Duplication Interface circuit pack in a PPN for a High or Critical Reliability system, or the EPN Maintenance circuit pack in an EPN have reported that the status of Battery & Battery Charger is good.

POWER (Battery & Battery Charger for DC-Powered Systems

MO Name (in Alarm Log)	Alarm Level	Initial Command to Run[1]	Full Name of MO
POWER	MINOR	test environment P	Battery & Battery Charger

1 Where P is an appropriate port network number determined via the Port field from the Alarm or Error Log.

NOTE:
For environment maintenance, the PPN or EPN cabinet configuration aspects for a High or Critical Reliability system are irrelevant.

The environment maintenance strategy to be used depends on both the cabinet configuration and the type of powering. Refer to the DC-POWER (DC Power) Maintenance documentation for environment maintenance strategy.

In a DC-powered cabinet, the POWER MO still exists, but serves no functional purpose. Because the system cannot determine the type of powering provided, all POWER tests should always pass or abort. Since the tests should never fail, POWER alarms should not be raised.

Error Log Entries and Test to Clear Values

Table 10-496. Power Error Log Entries

Error Type	Aux Data	Associated Test	Alarm Level	On/Off Board	Test to Clear Value
0[1]	0	Any	Any	Any	test environment P sh r 1
1	Any	Battery & Battery Charger Query Test (#5) (Error Code 8)	MINOR	ON	test environment P sh r 1
257	Any	Battery & Battery Charger Query Test (#5) (Error Code 4)	MINOR	ON	test environment P sh r 1

Continued on next page

Table 10-496. Power Error Log Entries — *Continued*

Error Type	Aux Data	Associated Test	Alarm Level	On/Off Board	Test to Clear Value
769	Any	Battery & Battery Charger Query Test (#5) (Error Code 2)	MINOR	ON	test environment P sh r 1
3840 (a)	1005 or 1028	Assoc. Test Battery & Battery Charger Query Test (#5)		ON	

1 Run the Short Test Sequence first. If all tests pass, run the Long Test Sequence. Refer to the appropriate test description and follow the recommended procedures.

Note:

a. This error occurs only in a multi-carrier cabinet and can be ignored but not cleared for DC-powered systems.

System Technician-Demanded Tests: Descriptions and Error Codes

Always investigate tests in the order presented in the table below when inspecting errors in the system. By clearing error codes associated with the *Battery & Battery Charger Query Test,* for example, you may also clear errors generated from other tests in the testing sequence.

Order of Investigation	Short Test Sequence	Long Test Sequence	D/ ND[1]
Battery & Battery Charger Query			
Test (#5)	X	X	ND
AC Power Query Test (#78) (a)	X	X	ND
Emergency Transfer Query Test (#124) (c)	X	X	ND
Cabinet Sensors Query Test (#122) (d)	X	X	ND
External Alarm Lead Query Test (#120) (e)	X	X	ND
Analog Ring Generator Initialization Test (#117) (f)	X	X	ND
Analog Ring Generator Query Test (#118) (f)	X	X	ND

1 D = Destructive; ND = Nondestructive

Notes:

a. Refer to “AC-POWER” (AC Power) for a description of this test.

b. Refer to “EMG-XFER” (Emergency Transfer) for a description of this test.

c. Refer to “CABINET” (Cabinet Sensors) for a description of this test.

d. Refer to “EXT-DEV” (External Alarm) for a description of this test.

e. Refer to “RING-GEN” for a description of this test.

NOTE:
This test shows up in the test sequence only if there is a TN768 or TN780 Tone-Clock circuit pack in the port network being tested.

Battery & Battery Charger Query Test (#5)

This test queries the Maintenance/Tape Processor in a standard PPN, the Duplication Interface circuit pack in a PPN for a High or Critical Reliability system, or the EPN Maintenance circuit pack in an EPN for the status of the battery pack and battery charger, and reports the result. In a DC-powered system, this test should never fail. During this test, the status LED on the battery charger is lit and extinguished if the status of the battery charger is reported as normal. This event is a result of checking that the battery charger is connected.

Table 10-497. TEST #5 Battery & Battery Charger Query Test

Error Code	Test Result	Description/Recommendation
1000	ABORT	System resources required to run this test are not available. 1. Retry the command at 1-minute intervals a maximum of 5 times.
1005	ABORT	Battery charger is not connected since the system uses DC power and the battery charger and battery are for AC-powered systems. 1. Ignore this error in DC-powered systems.
2000	ABORT	Response to the test request was not received within the allowable time period.
2028	ABORT	Internal system error prevented the extinguishing of the Battery Charger status LED. 1. Although this test is not relevant for DC-powered systems, this error should trigger close monitoring of the system as this error means that internal system problems exist.

Continued on next page

Table 10-497. TEST #5 Battery & Battery Charger Query Test — *Continued*

Error Code	Test Result	Description/Recommendation
2029	ABORT	Internal system error 1. Retry the command at 1-minute intervals a maximum of 5 times.
any	FAIL	The Duplication Interface circuit pack in a PPN for a high or critical reliability system is incorrectly reporting a problem with power. If this test fails, the problem is with the circuit pack and not with POWER. 1. The suspect circuit pack, depending on the system configuration, should be replaced and the test rerun.
	PASS	All that can be inferred is that the DUPINT (Duplication Interface) circuit pack in a PPN for a high or critical reliability system is working properly.

PPP-PT (Control LAN Packet/Port)

MO Name (in Alarm Log)	Alarm Level	Initial Command to Run[1]	Full Name of MO
PPP-PT	MAJOR	**test port UUCSSpp long**	PPP Port Maintenance
PPP-PT	MINOR	**test port UUCSSpp long**	PPP Port Maintenance
PPP-PT	WARNING	**test port UUCSSpp**	PPP Port Maintenance

1 *UU* is the universal cabinet number (1 for PPN, 2 or 3 for EPNs). *C* is the carrier designation (A, B, C, D, or E). *SS* is the number of the slot in which the circuit pack resides (01 to 21). *pp* is the two digit port number (01, 02, ...).

The TN799 Control LAN (CLAN) packet port circuit pack provides TCP/IP connection to adjuncts applications such as CMS, Intuity, and DCS Networking. The CLAN circuit pack has 1-10baseT Ethernet connection and up to 16 DS0 physical interfaces for PPP connections. Multiple CLAN circuit packs in a system gives additional TCP/IP capacity.

A remote socket control link (RSCL) links the CLAN and the SPE to pass call control and other management information. Since one link serves all the ports on the circuit pack, maintenance of the RSCL is part of the CLAN circuit pack maintenance.

NOTE:
The CLAN TN799 circuit pack combines the functions of the PGATE and PI circuit packs into one circuit pack. The PGATE or PI can be used with the CLAN to create an X.25 to TCP/IP bridge for adjunct and DCS connectivity.

Control LAN Congestion Controls

The switch activates congestion controls on CLAN when it detects buffers exceeding the threshold. The switch releases the congestion controls when the CLAN reports that its buffer level has returned to normal levels.

If congestion:	Then the switch:
Persists for a 14-minute interval	Raises MINOR alarm
Exhausts buffers	Raises MINOR alarm
Ceases for 12 minutes	Retires MINOR alarm

Error Log Entries and Test to Clear Value

Table 10-498. PPP-PT Error Log Entries

Error Type	Aux Data	Associated Test	Alarm Level	On/Off Board	Test to Clear Value
0[1]	0	Any	Any	Any	test port UUCSSpp s
1 (a)	0	SCOTCH Sync Looparound Test (#1275)	MINOR	ON	test port UUCSSpp l r 3
257 (b)	0		WARNING	OFF	
513 (c)	0		MINOR	OFF	
769 (d)	0		WARNING	OFF	
1281 (e)	0				
1537, 1538 (f)	See note	Session Status Test (#1286)	MINOR	OFF	
1793-1920 (g)	See note				
2305-2560 (h)	See note				
2561-2816 (h)	See note				
3329 (i)	35768	TCP/IP Ping Test (#1281)	WARNING	OFF	
3585 (j)	0-1	TDM Looparound Test (#1285)	MAJOR	ON	test port UUCSSpp l r 3

1 Run the Short Test Sequence first. If all tests pass, run the Long Test Sequence. Refer to the appropriate test description and follow the recommended procedures.

Notes:

a. **Error Type 001**: SCOTCH Synchronous Looparound Test (#1275) failed.

   1. Test the port (**test port UUCSSpp long**).
   2. Refer to SCOTCH Synchronous Looparound Test (#1275) repair procedures.

b. **Error Type 257**: CLAN port detected overrun or underrun condition that may indicate a hardware problem.

   1. Test for hardware problem (**test port UUCSSpp long**).
   2. Refer to SCOTCH Synchronous Looparound Test (#1275) repair procedures to verify repair.
   3. Clear the alarm (**test port UUCSSpp long clear**).

c. **Error Type 513**: PPP link lost end-to-end connectivity.

   1. Test for hardware problem (**test port UUCSSpp long**).
   2. Run TDM Looparound Test (#1285) and refer to repair procedures if there is a hardware problem.

      If there is no hardware problem, the switch tries to re-establish PPP link.

d. **Error Type 769**: Port received an invalid frame, which

   - is greater than the maximum length
   - contains CRC errors
   - violates the link level protocol.

   1. Test the port (**test port UUCSSpp long**).
   2. Refer to TDM Port Looparound Test (#1285) to verify repair.
   3. Clear the alarm (**test port UUCSSpp long clear**).

e. **Error Type 1281**: System software received an indication that the far-end has requested a disconnect of a session on this link. This is a log-only error.

f. **Error Type 1537, 1538**: Some or all port sessions (sockets) are down.

If the switch indicates that:	Then it:
Some of the sessions are down	Raises off-board WARNING
All of the sessions are down	Raises off-board MINOR alarm

   1. Test the port (**test port UUCSSpp short**).
   2. Refer to Session Status Test (#1286) repair procedure to verify repair.

g. **Error Type 1793-1920**: system software received an indication that a socket was closed due to an error. Error Type indicates the application associated with this socket.

Error Type	Application
1793	Unused
1794	DCS
1795	AUDIX
1796	CMS
1797	ISDN Gateway
1798-1920	Reserved for future

Aux Data indicates the internal application number.

h. **Error Type 2305-2816**: System software detected a session is down. Aux Data indicates the session number. These are log only errors. Error types 2305-2560 are for session numbers 1-256. Error types 2561-2816 are for session numbers 257-512.

i. **Error Type 3329**: TCP/IP Ping Test failed.

   1. Test the port (**test port UUCSSpp short**).
   2. Refer to TCP/IP Ping Test (#1281) repair procedures.

j. **Error Type 3585**: TDM Port Looparound Test (#1285) failed.

   1. Test the port (**test port UUCsspp long**).
   2. Refer to TDM Looparound Test (#1285) repair procedure.

System Technician-Demanded Tests: Descriptions and Error Codes

Investigate errors in the order they appear in the table below.

Table 10-499. System Technician-Demanded Tests: PPP-PT

Order of Investigation	Short Test Sequence	Long Test Sequence	D/ND[1]
TDM Looparound Test (#1285)		X	D
SCOTCH Synchronous Looparound Test (#1275)		X	D
TCP/IP Ping Test (#1281)	X	X	ND
Session Status Test (#1286)	X	X	ND
PPP Link Status Test (#1279)	X	X	ND

1 D = Destructive, ND = Non-destructive

TDM Looparound Test (#1285)

NOTE:
This test is destructive.

This test verifies whether the CLAN PPP port can send and receive data on the TDM bus. This test has a tone generator send tones on a timeslot, and it has a tone receiver receive tones on another timeslot. The tones are looped through the ppp port.

If the received tones:	Then:
Match the tones sent	The test passes
Do not match the tones sent	The test fails

Test failure indicates failure of the

- CLAN (TN799) circuit pack
- TDM Bus
- Tone generator / tone receiver circuit pack

Table 10-500. TEST #1285 TDM Looparound Test

Error Code	Test Result	Description/Recommendation
1000	ABORT	The port is in use. 1. Determine port status (**status clan-port UUCSSpp**). 2. Retry the command when the port is idle. The port may be forced to the idle state by executing a **busyout port UUCSS** command. 3. Escalate if the problem persists. **NOTE:** The **busyout port** command is destructive, causing all calls and links associated with the port to be torn down.
1002	ABORT	No TDM bus timeslots available for the test. 1. Retry the command at 1-minute intervals, up to 5 times. 2. Escalate if the problem persists.
1003	ABORT	No more tone receivers idle for use in this test. 1. Retry the command at 1-minute intervals, up to 5 times. 2. Escalate if the problem persists.
2000	ABORT	Did not receive circuit pack test response within the allowable time period. 1. If this problem persists, reset the circuit pack (**busyout board UUCSS**, **reset board UUCSS**, and **release board UUCSS**). 2. If the problem persists, replace the circuit pack.
2012	ABORT	Internal system error. 1. Retry the command at 1-minute intervals, up to 3 times. 2. Escalate if the problem persists.

Continued on next page

Table 10-500. TEST #1285 TDM Looparound Test — *Continued*

Error Code	Test Result	Description/Recommendation
2100	ABORT	Could not allocate the necessary system resources to run test. 1. Retry the command at 1-minute intervals, up to 5 times. 2. Escalate if the problem persists.
	FAIL	Received tones do not match transmitted tones. 1. Retry command at 1-minute intervals, up to 3 times. 2. If the problem persists, refer to TDM-BUS, Tone Generator, and Tone Receiver repair procedures. 3. If the problem persists, reset the board (**busyout board UUCSS**, **reset board UUCSS**, and **release board UUCSS**). Repeat the test. 4. If the problem persists, replace the circuit pack.
	PASS	Port connections across the TDM bus function properly.

SCOTCH Synchronous Looparound Test (#1275)

NOTE:
This test is destructive.

This test verifies the circuit in the datapath of a ppp call. This test fails if the data transmitted on the port does not match the data received in the looparound mode. Failure of this test indicates a port hardware fault on the circuit pack.

This test aborts if calls are using the port, or if the PPP link associated with the port is connected. To avoid this, first enter **busyout data-module *extension***, or **busyout port UUCSSpp**, or **busyout link *link#***, which will cause all calls and links using the port to be torn down.

Table 10-501. TEST #1275 SCOTCH Synchronous Looparound Test

Error Code	Test Result	Description/Recommendation
1000	ABORT	The port is in use or PPP link is connected. 1. Determine when the port is available for testing (**status clan-port UUCSSpp**). 2. The port may be forced to the idle state by executing a **busyout port UUCSSpp** command. **NOTE:** This command is destructive, causing all calls and links using the port to be torn down.
1002	ABORT	No TDM bus timeslots available for the test. 1. Retry the command at 1-minute intervals, up to 5 times. 2. Escalate if the problem persists.
1963	ABORT	Firmware indicates that the port is in use or ppp link is connected. 1. Determine when the port is available for testing (**status clan-port UUCSSpp**). 2. The port may be forced to the idle state by executing a **busyout port UUCSSpp** command. **NOTE:** This command is destructive, causing all calls and links using the port to be torn down.
2000	ABORT	Did not receive circuit pack test response within the allowable time period. 1. If this problem persists, reset the circuit pack (**busyout board UUCSS**, **reset board UUCSS**, and **release board UUCSS**). 2. If the problem persists, replace the circuit pack.
2012	ABORT	Internal system error. 1. Retry the command at 1-minute intervals, up to 3 times. 2. Escalate if the problem persists.

Continued on next page

Table 10-501. TEST #1275 SCOTCH Synchronous Looparound Test — *Continued*

Error Code	Test Result	Description/Recommendation
2100	ABORT	Could not allocate the necessary system resources to run test. 1. Retry the command at 1-minute intervals, up to 5 times. 2. Escalate if the problem persists.
	FAIL	CLAN circuit pack detected test failure. 1. If the problem persists, reset the circuit pack (**busyout board UUCSS**, **reset board UUCSS**, and **release board UUCSS**). 2. If the problem persists, replace the circuit pack.
	PASS	Port circuitry functioning properly.

TCP/IP Ping Test (#1281)

This non-destructive test fails if the endpoint fails to respond. Use this test to check the circuitry in the data path for a peer-to-peer IP layer connection.

Table 10-502. TEST #1281 TCP/IP Ping Test

Error Code	Test Result	Description/Recommendation
1, 2, 7, 11	ABORT	Internal error 1. Retry the command at 1-minute intervals up to 3 times 2. Escalate if the problem persists.
1005	ABORT	Test configuration is incorrect. 1. Verity PPP link is in-service (**status clan-port UUCSSpp** or **status link *n***). 2. Repeat the test. 3. Escalate if the problem persists.
1124	ABORT	ppp link is not enabled. 1. Verify that the ppp link is enabled (**status port UUCSSpp**, **status link *n***, or **display data-module**). 2. If the link is not enabled, enable the link (**change data-module**). 3. Repeat the test. 4. Escalate if the problem persists.
1125	ABORT	PPP link not in service. 1. Verify whether ppp link is in service (**status port UUCSSpp** or **status link n**). 2. If the ppp link is not in service, release the link (**release link n** or **release port UUCSSpp**). 3. Repeat the test. 4. Escalate if the problem persists.
2000	ABORT	Response to the test was not received from the CLAN circuit pack within the allowable time period. 1. If this result occurs repeatedly, attempt to reset the circuit pack if the other ports on the board are not in use (Yellow LED is off). Reset the circuit pack (**busyout board UUCSS**, **reset board UUCSS**, and **release board UUCSS**). 2. If this result occurs again, replace the circuit pack.
2012	ABORT	Internal system error. 1. Retry the command at 1-minute intervals, up to 3 times. 2. Escalate if the problem persists.

Continued on next page

Table 10-502. TEST #1281 TCP/IP Ping Test — *Continued*

Error Code	Test Result	Description/Recommendation
2100	ABORT	Could not allocate the necessary system resources to run test. 1. Retry the command at 1-minute intervals, up to 5 times. 2. Escalate if the problem persists.
2500	ABORT	Internal system error. 1. Retry the command at 1-minute intervals, up to 3 times. 2. Escalate if the problem persists.
1003	FAIL	Ping to the destination failed due to on-board problem. 1. Retry the command at 1-minute intervals, up to 3 times. 2. If the problem persists, reset the circuit pack (**busyout board UUCSS**, **reset board UUCSS**, and **release board UUCSS**). 3. If the problem persists, re-administer the PPP connection through a different PPP port, if available. 4. If the problem still persists, or if there are no other available PPP ports, replace the circuit pack.
1007	FAIL	Ping to the destination failed due to the destination down. 1. A PPP destination or a component in the path (e.g., DS1 trunk) may be down. Check the status of the destination or other components in the path. 2. If the destination and all components in the path are in-service, ping the PPP destinations (**ping ip-address *xxx.xxx.xxx.xxx***). 3. Escalate if the problem persists.
	PASS	TCP/IP Ping Test (#1281) is successful.

Session Status Test (#1286)

This non-destructive test determines the status of all PPP port sessions. This test queries the system software on port session status.

If the system software indicates that:	Then the switch:
All port sessions are up (ALL UP)	Raises no alarm, or retires alarm
Some port sessions are up (SOME UP)	Raises MINOR alarm
All port sessions are down (ALL DOWN)	Raises MINOR alarm

Table 10-503. TEST #1286 Session Status Test

Error Code	Test Result	Description/Recommendation
1124	ABORT	ppp link is not enabled. 1. Verify that the ppp link is enabled (**status port UUCSSpp**, **status link *n***, or **display data-module**). 2. If the link is not enabled, enable the link (**change data-module**). 3. Repeat the test. 4. Escalate if the problem persists.
1125	ABORT	PPP link not in service. 1. Verify whether PPP link is in service (**status port UUCSSpp** or **status link n**). 2. If the PPP link is not in service, release the link (**release link n** or **release port UUCSSpp**). 3. Repeat the test. 4. Escalate if the problem persists.
2000	ABORT	Did not receive circuit pack test response within the allowable time period. 1. If the problem persists, reset the circuit pack (**busyout port UUCSSpp**, **reset board UUCSS**, and **release board UUCSS**). 2. If the problem persists, replace the circuit pack.
2100	ABORT	Could not locate the necessary system resources to run this test. 1. Retry the command at 1-minute intervals, up to 5 times. 2. Escalate if the problem persists.
2500	ABORT	Internal system error. 1. Retry the command at 1-minute intervals, up to 3 times. 2. Escalate if the problem persists.

Continued on next page

Table 10-503. TEST #1286 Session Status Test — *Continued*

Error Code	Test Result	Description/Recommendation
1	FAIL	System software indicates at least one PPP link session is down (SOME UP). 1. Isolate downed sessions (**status port UUCSSpp** or **status link n**). Follow actions based on session information.
2	FAIL	System software indicates all PPP sessions are down (ALL DOWN). 1. Test the port (**test port UUCSSpp**) to verify the SCOTCH Synchronous Looparound Test (#1275) result. 2. If test passes, wait for system software to indicate ALL UP. 3. If the test fails, check the destination and other components in the path. 4. If the destination and other components in the path are in-service, take action based on session information.
	PASS	All sessions up.

PPP Link Status Inquiry Test (#1279)

This non-destructive test determines the state of the PPP link. The test passes only if the link is up.

Table 10-504. TEST #1279 PPP Link Status Inquiry Test

Error Code	Test Result	Description/Recommendation
1124	ABORT	ppp link is not enabled. 1. Verify that the ppp link is enabled (**status port UUCSSpp**, **status link *n***, or **display data-module**). 2. If the link is not enabled, enable the link (**change data-module**). 3. Repeat the test. 4. Escalate if the problem persists.
1125	ABORT	PPP Link is not in service. 1. Verify whether PPP link is in-service (**status port UUCSSpp** or **status link n**). 2. If the PPP link is not in service, release the link (**release link n** or **release port UUCSSpp**). 3. Repeat the test. 4. Escalate if the problem persists.
2100	ABORT	Could not locate the necessary system resources to run this test. 1. Retry the command at 1-minute intervals, up to 5 times. 2. Escalate if the problem persists.
2500	ABORT	Internal system error. 1. Retry the command at 1-minute intervals, up to 3 times. 2. Escalate if the problem persists.

Continued on next page

Table 10-504. TEST #1279 PPP Link Status Inquiry Test — *Continued*

Error Code	Test Result	Description/Recommendation
	FAIL	PPP link is down. 1. Test the port (**test port UUCSSpp long**) to verify the SCOTCH Synchronous Local Loop Around Test (#1275) result. 2. If the test passes, wait for sessions to come up. 3. If the test fails, check the destination and other components in the path (e.g., DS1 trunks). 4. If the destination and other components in the path are in-service and the test still fails, execute **busyout port UUCSSpp** and **release port UCCSSpp**, and repeat the test. 5. If the test still fails, reset the circuit pack (**busyout board UUCSS**, **reset board UUCSS**, and **release board UUCSS**). Repeat the test. 6. If the problem persists, replace the circuit pack.
	PASS	PPP link is up.

PR-MAINT (Maintenance Processor [TN2404/TN790 RISC Systems])

MO Name (in Alarm Log)	Alarm Level	Initial Command to Run	Full Name of MO
PR-MAINT	MIN[1]	test processor a/b sh/l	Maintenance Processor

1 Alarms on the PROCR and PR-MAINT maintenance objects are indicated by the red LED on the Processor circuit pack.

The TN2404/TN790 Processor circuit pack is comprised of the RISC Processor (PROCR), the Maintenance Processor (PR-MAINT), and the Memory (PR-MEM). PR-MAINT is responsible for monitoring the sanity of the RISC Processor.

PR-MAINT contains the hardware required for controlling the environmental conditions. The Maintenance/Tape Processor provides the serial interfaces for the administration terminal and DCE port. The Maintenance Processor also provides the communications interface to INADS for alarm reporting and remote maintenance capability. INADS connectivity is through the internal or external modem. The external modem is connected to the DCE port. When the external modem is the administered modem option the internal modem is disabled.

The TN2404/TN790 has a higher speed 9600 baud internal modem or can support an external modem connected to the DCE port.

Error Log Entries and Test to Clear Values

Table 10-505. PR-MAINT Error Log Entries

Error Type	Aux Data	Associated Test	Alarm Level	On/Off Board	Test to Clear Value[1]
0[2]	0	Any	Any	Any	test processor a/b sh r 1
1(a)	Any	MTP Reset Test (#101)	MIN	ON	test processor a/b l r 3
257(b)	Any	MTP Sanity Handshake Test (#106)			test processor a/b r 2
513(c)	Any	MTP Analog Loop Around Test (#103)	MIN	ON	test processor a/b r 8
769(d)	Any	MTP Dual Port Ram Test (#104)	MIN	ON	test processor a/b l r 3
1025(e)	Any	MTP Outpulse Relay Test (#102)	MIN	OFF	test processor a/b r 5

Continued on next page

Table 10-505. PR-MAINT Error Log Entries — *Continued*

Error Type	Aux Data	Associated Test	Alarm Level	On/Off Board	Test to Clear Value[1]
1537(f)	Any	MTP SAT Loop Around Test (#228)	MIN	ON	test processor a/b r 3
1793(g)	Any	MTP Aux Loop Around Test (#229)	MIN	ON	test processor a/b r 3
2049(h)	Any	External Modem Present Test (#230)	MIN	OFF	test processor a/b r 2

1 The MTP Reset Test (#101) logs you off. The MTP Dual Port Ram Test (#104) can also log you off. Manually repeat the command with the “long” option for the designated number of times when testing from the PPN SAT.

2 Run the Short Test Sequence first. If all tests pass, run the Long Test Sequence. Refer to the appropriate test description and follow the recommended procedures.

Notes:

a. The MTP Reset Test (#101) has failed.

b. The MTP Sanity Handshake Test (#106) has failed.

c. The MTP Analog Loop Around Test (#103) has failed.

d. The MTP Dual Port Ram Test (#104) has failed. An error of 769 with an aux data of 5 indicates a hardware problem and testing cannot clear it. Replace the circuit pack.

e. The MTP Outpulse Relay Test (#102) has failed.

f. The MTP SAT Loop Around Test (#228) has failed.

g. The MTP Aux Loop Around Test (#229) has failed.

h. The External Modem Present Test (#230) has failed.

NOTE:
Refer to the FAIL section of each test that fails for further instructions.

System Technician-Demanded Tests: Descriptions and Error Codes

Always investigate tests in the order presented in the table below. By clearing error codes associated with the *MTP Reset Test,* for example, you may also clear errors generated from other tests in the testing sequence. The following table is for the TN2404/TN790 [RISC] System.

Order of Investigation	Short Test Sequence	Long Test Sequence	D/ND[1]
Processor Cache Test (#895)(a)		X	ND
Processor Cache Audit (#896)(a)	X	X	ND
Processor Bus Time-out Exception Test (#82)(a)	X	X	ND
Processor BOOTPROM Checksum Test (#80)(a)	X	X	ND
Processor Write Buffer Test (#900)(a)	X	X	ND
Memory Burst Read Test (#908)(a)	X	X	ND
Read All Memory Test (#85)(a)		X	ND
Memory Parity Error Detection Test (#87)(a)	X	X	ND
Flash Memory Checksum Test (#86)(a)		X	ND
Memory Functional Test (#332) (b)(c)		X	D
MTP Outpulse Relay Test (#102)(d)	X	X	ND
External Modem Present Test (#230)(d)(e)	X	X	ND
MTP Analog Loop Around Test (#103)(d)	X	X	ND
MTP Sanity Handshake Test (#106)	X	X	ND
MTP SAT Loop Around Test (#228)	X	X	ND
MTP Aux Loop Around Test (#229)	X	X	ND
MTP Reset Test (#101)		X	D
MTP Dual Port Ram Test (#104)(d)		X	D

1 D = Destructive; ND = Nondestructive

Notes:

a. Refer to PROCR (TN2404/TN790 RISC Processor) for a description of these tests.

b. Refer to PR-MEM (TN2404/TN790 RISC Memory) for a description of these tests.

c. This test is run only on the standby SPE in a high or critical reliability system. On other systems or on the Active SPE, the test is run only via a **reset system 4** command or a **reset system 5** command.

d. This test only runs on the active SPE.

e. This test aborts if an external modem is not administered.

MTP Reset Test (#101)

This test is destructive.

The test resets the Maintenance Processor. The destructive nature of this test causes the following:

- System Access Terminal to log off
- DCE port to terminate data transmission
- Any current memory card access to terminate and also to tear down any remote access INADS connection

Table 10-506. TEST #101 MTP Reset Test

Error Code	Test Result	Description/Recommendation
100	ABORT	The requested test did not complete within the allowable time period. 1. Retry the command.
1029 2014 2015 2016 2017 2018 2020 2022 2024 2025 2051	ABORT	Refer to “STBY-SPE” for a description of these error codes.
2500	ABORT	Internal system error 1. Retry at 1-minute intervals a maximum of 5 times.

Continued on next page

Table 10-506. TEST #101 MTP Reset Test — *Continued*

Error Code	Test Result	Description/Recommendation
1196	FAIL	The MTP did not respond to being reset. 1. Retry at 1-minute intervals a maximum of 5 times. 2. If the test continues to fail, replace the Processor circuit pack.
1197	FAIL	The Maintenance Processor was reset, but it responded with a NOT PASS status, indicating that it did not pass initialization correctly. The MTP is not functioning correctly. The system continues to function. Environmental monitoring is lost, as is communication with the Standby Processor. 1. Retry at 1-minute intervals a maximum of 5 times. 2. If test continues to fail, replace the Processor circuit pack. **NOTE:** If you replace the Processor circuit pack, you need to obtain a new license file.
	PASS	The Maintenance Processor was reset, and it passed initialization correctly. The other MTP tests should be examined to verify that the MTP is functioning correctly. 1. Enter **test processor a/b** and verify that the MTP is functioning correctly.

MTP Outpulse Relay Test (#102)

This test is a nondestructive test.When the internal modem is administered, the test validates the correct operation of the remote access CO trunk used by INADS. The MTP first goes off-hook, then on-hook on this trunk. If the loop current is detected, the test passes. If the external modem is administered the MTP sends an AT command sequence that will cause the external modem to go OFF-HOOK and wait for dial-tone. If the modem detects dial-tone, the test passes. This test is not allowed if the remote access line is in use.

Table 10-507. TEST #102 MTP Outpulse Relay Test

Error Code	Test Result	Description/Recommendation
100	ABORT	The test did not complete within the allowable time period. 1. Retry the command.
1018	ABORT	The test has been disabled via administration. 1. To enable the test, issue the **change system-parameters maintenance** command, and set the test remote access port field to “y.” (If you have an INADS line, set the field to “y.” 2. Rerun the test.
1030	ABORT	This test is not run on the Standby SPE.
1131	ABORT	INADS port is busy because the system is reporting alarms to INADS, or because INADS is dialed into the system. 1. If INADS is communicating with the switch the INADS trunk is working. There is no need to run this test. 2. Or if required. Wait about ten minutes (until the INADS session is terminated) and then re-enter the command.
1000	ABORT	System software resources required for this test are not available. 1. Retry at 1-minute intervals a maximum of 5 times.
1050	ABORT	System could not determine if the testing of the INADS port is administered. 1. Enter the **change system-parameters maintenance** command. Verify that the “Test Remote Access Port?” field is set to “y.” 2. Retry the command at 1-minute intervals a maximum of 5 times.
2033, 2500		Internal system error 1. Retry at 1-minute intervals a maximum of 5 times.
2000	ABORT	MTP did not respond to the test request. 1. Repeat the test at 1-minute intervals a maximum of 5 times. 2. If all MTP tests are aborting, execute the **test processor a/b long** command in order to reset MTP and to examine the results of the MTP Reset Test (#101). 3. Replace the Processor circuit pack. 4. If only the MTP outpulse relay test is aborting, escalate problem.

Continued on next page

Table 10-507. TEST #102 MTP Outpulse Relay Test — *Continued*

Error Code	Test Result	Description/Recommendation
	FAIL	MTP reported test failure. No loop current detected. The following steps apply to either an internal or external modem (Some additional steps apply to an external modem only). 1. Retry at 1-minute intervals a maximum of 5 times. 2. For an external modem, if the test continues to fail: a. If Test #230 failed, use the external modem recommendations listed in Test #230. b. If Test #230 passes, the MTP most likely received a NO DIAL TONE response to the ATD command sent from the MTP. This problem is between the modem and the INADS trunk. 3. Examine the INADS trunk for connectivity, and manually check for loop current. 4. If there is no INADS trunk, this test should be disabled. To disable the test, issue **change system-parameters maintenance**, and change the Test Remote Access Port field to “n.” 5. If the INADS trunk checks out okay, but the test still fails, check the backplane connector wiring. 6. If the backplane wiring checks out okay, replace the Processor circuit pack. **NOTE:** If you replace the Processor circuit pack, you need to obtain a new license file.
	PASS	MTP detected a loop current on the remote access port. 1. If the system cannot call INADS, or INADS cannot contact the system, check with the local Central Office for problems with the INADS trunk, and verify that the INADS number is correct. Approved external modems with factory default settings are expected to work if administered correctly using **change system-parameters**.

MTP Analog Loop Around Test (#103)

This test is a nondestructive test. The test does a loop around by using the MTP INADS channel. Test data is sent through the modem out toward the INADS trunk. The data is looped around before the actual trunk, and it comes back into the on-board modem. The data is then verified for integrity. The internal modem is tested when the internal modem is selected. The external modem is tested when the external modem is selected.

When an external modem is administered in place of the internal modem, the test loops data in the MTP DUART ahead of the connection to the external modem. This test also causes the MTP DUART to verify that **Clear-To-Send (CTS)** is being supplied by the modem.

NOTE:
The test does not send any data onto the INADS trunk. However, to pass, the test does require the trunk to be present

Table 10-508. TEST #103 MTP Analog Loop Around Test

Error Code	Test Result	Description/Recommendation
100	ABORT	The test did not complete within the allowable time period. 1. Retry the command.
1000	ABORT	System software resources required for this test are not available. 1. Retry at 1-minute intervals a maximum of 5 times.
1018	ABORT	The test has been disabled via administration. 1. To enable the test, issue the **change system-parameters maintenance** command, and set the Test Remote Access Port field to “y.” 2. Rerun the test.
1030	ABORT	This test is not run on the Standby SPE.
1050	ABORT	System could not determine if the testing of the INADS port is administered. 1. Enter **change system-parameters maintenance** command, and verify the entry for the Test Remote Access Port field. 2. Retry at 1-minute intervals a maximum of 5 times.

Continued on next page

Table 10-508. TEST #103 MTP Analog Loop Around Test — *Continued*

Error Code	Test Result	Description/Recommendation
1131	ABORT	INADS port is busy because the system is reporting alarms to INADS, or because INADS is dialed into the system. 1. If INADS is communicating with the switch the INADS trunk is working. There is no need to run this test. 2. Or if required. Wait about ten minutes (until the INADS session is terminated) and then re-enter the command.
1000	ABORT	System software resources required to run this test are not available.
2000	ABORT	MTP did not respond to the test request. Repeat test at 1-minute intervals a maximum of 5 times. If only the MTP Analog Loop Around Test is aborting, escalate the problem. If all MTP tests are aborting, execute the **test processor a/b long** command in order to reset MTP, and examine the results of the MTP Reset Test (#101).
2033, 2500	ABORT	Internal system error 1. Repeat the command at 1-minute intervals a maximum of 5 times.

Continued on next page

Table 10-508. TEST #103 MTP Analog Loop Around Test — *Continued*

Error Code	Test Result	Description/Recommendation
	FAIL	MTP reported test failure. The system is not able to reliably contact INADS with alarm data. However, the system continues to provide good service. 1. For an internal modem: a. If MTP Outpulse Relay Test (#102) is also failing, check for the presence of the INADS trunk, and resolve any INADS trunk problems. b. If Test #102 passes, the fault is on the Processor circuit pack. The circuit pack should be replaced. 2. For an external modem: a. Check the power to the modem. b. Check the RS-232 cable connections from the DCE terminal on the switch to the DTE connector on the modem. Transmit, Receive, RTS, and CTS signals must be communicating between the MTP DUART hardware and the modem hardware c. The MTP DUART or related circuitry on the processor circuit pack may have failed. The circuit pack should be changed at your convenience. **NOTE:** If you replace the Processor circuit pack, you need to obtain a new license file.
	PASS	For an internal modem—MTP detected correct data through the loop back connection. For an external modem—The test detected correct data through the loop back in the MTP DUART hardware ahead of the RS232 connection to the modem, and received a CTS signal from the external modem. 1. If the system cannot call INADS, or if INADS cannot contact the system, check with the local Central Office for problems with the INADS trunk, and verify that the INADS number is correct.

MTP Dual Port Ram Test (#104)

This test is destructive.

The test terminates any PPN SAT session, and it is a coordinated test of the MTP dual port ram (DPR). The DPR is a section of memory that is shared by the MTP and by the RISC Processor circuit pack. Control messages and data are passed through the DPR. The test forces both sides to read and write the DPR simultaneously in alternate locations.

The DPR test causes the PPN SAT to log off before the test result is displayed. The test result is determined according to the terminal from which the test is run. If the test is run from the PPN SAT, system technician should log back in and examine the Error Log for an error against PR-MAINT, with Error Type 769, no Aux Data. This error entry indicates that the MTP DPR Test failed and that the Processor circuit pack should be replaced.

NOTE:
If the test is being run from a terminal other than the PPN SAT (for example, EPN SAT, remote access, etc.), the test results are displayed on the screen.

NOTE:
A dial-up (through the INADS port) does not display the results discussed in the previous paragraph. However, a dial-up through data channels does display these results.

Table 10-509. TEST #104 MTP Dual Port Ram Test

Error Code	Test Result	Description/Recommendation
100	ABORT	The test did not complete within the allowable time period. 1. Retry the command.
1000	ABORT	System software resources required for this test are not available. 1. Retry at 1-minute intervals a maximum of 5 times.
1030	ABORT	This test in not run on the Standby SPE.
2000	ABORT	The response to the test request was not received within the allowable time period.
2028	ABORT	System software resources required for this test are not available.

Continued on next page

Table 10-509. TEST #104 MTP Dual Port Ram Test — *Continued*

Error Code	Test Result	Description/Recommendation
2029	ABORT	Internal system error 1. Retry at 1-minute intervals a maximum of 5 times.
	FAIL	The dual port RAM is not functioning correctly. Communication between the processor and MTP is lost. The system is not able to report environmental alarms, communicate with the Standby SPE, or reboot from tape, if necessary. 1. Retry at 1-minute intervals a maximum of 5 times. 2. If the test continues to fail, replace the Processor circuit pack. **NOTE:** If you replace the Processor circuit pack, you need to obtain a new license file.
	PASS	Dual port RAM is functioning. Communication exists between the Processor circuit pack and the MTP.

MTP Sanity Handshake Test (#106)

This test is a nondestructive test. The MTP Sanity Handshake Test is simply a query from a maintenance process to the MTP. The MTP must reply for the test to pass.

Table 10-510. TEST #106 MTP Sanity Handshake Test

Error Code	Test Result	Description/Recommendation
100	ABORT	The test did not complete within the allowable time period. 1. Retry the command.
1000	ABORT	System software resources required for this test are not available. 1. Retry at 1-minute intervals a maximum of 5 times.
1029 2014 2015 2016 2017 2018 2020 2022 2024 2025 2051	ABORT	Refer to “STBY-SPE” for a description of these error codes.
2000	ABORT	The response to the test request was not received within the allowable time period.
2033	ABORT	Internal system error. 1. Repeat the command at 1-minute intervals a maximum of 5 times.
	FAIL	The MTP did not respond to the Sanity Handshake Query. 1. Re-enter command with the “long” option. 2. If the test continues to fail, replace the Processor circuit pack. **NOTE:** If you replace the Processor circuit pack, you need to obtain a new license file.
	PASS	The MTP responded to the Sanity Handshake Query.

MTP SAT Loop Around Test (#228)

This test is a nondestructive test. The test places the SAT channel of the MTP into a loop around mode, and it verifies the data integrity of the channel. Although the test is nondestructive, it causes loss of keyboard input from the PPN SAT.

Table 10-511. TEST #228 MTP SAT Loop Around Test

Error Code	Test Result	Description/Recommendation
100	ABORT	The test did not complete within the allowable time period. 1. Retry the command.
1000	ABORT	System software resources required for this test are not available.
1029 2014 2015 2016 2017 2018 2020 2022 2024 2025 2051	ABORT	Refer to “STBY-SPE” for a description of these error codes.
2000	ABORT	The response to the test request was not received within the allowable time period.
2033 2034	ABORT	Internal system error Port busy 1. Retry at 1-minute intervals a maximum of 5 times.
	FAIL	The SAT channel failed the Loop Back Test. The SAT is probably unusable for administration or maintenance. The EPN SAT, if available, or remote access can still be used. 1. Retry at 1-minute intervals a maximum of 5 times. 2. If the test continues to fail, replace the Processor circuit pack. **NOTE:** If you replace the Processor circuit pack, you need to obtain a new license file.
	PASS	The SAT channel passed the Loop Back Test. 1. If the PPN SAT is not usable, check the SAT itself, along with the cabling.

MTP Auxiliary Loop Around Test (#229)

This test is a nondestructive test. The test places the Auxiliary channel of the MTP into a loop around mode, and it verifies the data integrity of the channel. The Auxiliary channel is used as the CDR output port.

Table 10-512. TEST #229 MTP Auxiliary Loop Around Test

Error Code	Test Result	Description/Recommendation
100	ABORT	The test did not complete within the allowable time period. 1. Retry the command.
1029 2014 2015 2016 2017 2018 2020 2022 2024 2025 2051	ABORT	Refer to STBY-SPE Maintenance documentation for a description of these error codes.
1000	ABORT	The system software resources required for this test are not available. 1. Repeat the command at 1-minute intervals a maximum of 5 times.
1018	ABORT	The test has been disabled via administration. The **change system-parameters cdr** command needs to administer CDR. (See the *Administrator's Guide for Avaya MultiVantage Software* for more information on administering this port.)
2000	ABORT	Response to the test request was not received within the allowable time period
2033		Internal system error
2034		Port busy 1. Repeat the command at 1-minute intervals a maximum of 5 times.
2500	ABORT	The system software resources required for this test are not available. 1. Retry at 1-minute intervals a maximum of 5 times.

Continued on next page

Table 10-512. TEST #229 MTP Auxiliary Loop Around Test — *Continued*

Error Code	Test Result	Description/Recommendation
1048	ABORT	An External Modem is administered to this port.
	FAIL	The Auxiliary channel failed the Loop Back Test. The AUX port may not be sending any auxiliary data to the auxiliary collection device. 1. Repeat the command at 1-minute intervals a maximum of 5 times. 2. If test continues to fail, replace the Processor circuit pack. **NOTE:** If you replace the Processor circuit pack, you need to obtain a new license file.
	PASS	The Auxiliary channel passed the Loop Back Test. The auxiliary port is functioning correctly. 1. If no auxiliary data is being recorded, check the auxiliary collection device, and verify that it has been set up and connected correctly.

MTP External Modem Present Test (#230)

This test is a nondestructive test on the remote access line, and will run only if the channel is idle. The test validates the presence of an external modem with a firmware invoked AT command. The test will pass if the modem responds with “OK” to the AT command.

Table 10-513. TEST #230 External Modem Present Test

Error Code	Test Result	Description/Recommendation
100	ABORT	The test did not complete within the allowable time period. 1. Retry the command.
1018	ABORT	The test has been disabled via administration. 1. To enable the test, issue the **change system-parameters maintenance** command, and set the Test Remote Access Port field to “y.” 2. Rerun the test.
1030	ABORT	This test is not run on the Standby SPE.
1131	ABORT	INADS port is busy because the system is reporting alarms to INADS, or because INADS is dialed into the system. 1. If INADS is communicating with the switch the INADS trunk is working. There is no need to run this test. 2. Or if required. Wait about ten minutes (until the INADS session is terminated) and then re-enter the command.
1000	ABORT	System software resources required for this test are not available.
2033		Internal system error 1. Retry at 1-minute intervals a maximum of 5 times.
1049	ABORT	External Modem is not administered.
1050	ABORT	System could not determine if the testing of the INADS port is administered. 1. Enter the **change system-parameters maintenance** command, and verify the entry for the Test Remote Access Port field. 2. Retry at 1-minute intervals a maximum of 5 times.
2000	ABORT	MTP did not respond to the test request. 1. Repeat test at 1-minute intervals a maximum of 5 times. 2. If all MTP tests are aborting, execute the **test processor a/b long** command in order to reset MTP, and examine the results of the MTP Reset Test (#101).
2500	ABORT	Internal System software Error 1. Retry at 1-minute intervals a maximum of 5 times.

Continued on next page

Table 10-513. TEST #230 External Modem Present Test — *Continued*

Error Code	Test Result	Description/Recommendation
	FAIL	MTP reported test failure. The system is not able to reliably contact INADS with alarm data. However, the system continues to provide good service. The MTP did not receive an **OK** response after sending the **AT** command to the modem. 1. If the MTP Outpulse Relay Test (#102) is also failing, check for the presence of the inads trunk and resolve any inads trunk problems. 2. If Test #102 passed, and if Test #103 failed, follow the external modem recommendations for Test #103 failure. 3. If Tests #102 and #103 passed: a. Check the RS-232 connections from the DCE terminal on the switch to the DTE terminal on the modem. RTS and CTS signals are being communicated between the MTP DUART hardware and the modem hardware. Transmit and receive signals may not be communicated correctly. b. Check the modem administration using the **change system-parameters maintenance** command, especially changes from default parameters. c. Check the modem settings, especially changes from factory defaults. **CAUTION:** *The fault may be on the Processor circuit pack. The circuit pack should be replaced. Note that if you replace the Processor circuit pack, you need to obtain a new license file.*

Continued on next page

Table 10-513. TEST #230 External Modem Present Test — *Continued*

Error Code	Test Result	Description/Recommendation
	PASS	MTP detected correct data from the external modem. The MTP received an **OK** response after sending the **AT** command to the modem. 1. If the system cannot call INADS, or if INADS cannot contact the system, check with the local Central Office for problems with the INADS trunk, and verify that the INADS number is correct. If an external modem is being used instead of the internal MTP modem, modem settings may be wrong. Approved external modems with factory default settings are expected to work if administered correctly using the **change system-parameters maintenance** command.

PR-MAINT (Maintenance Processor)

MO Name (in Alarm Log)	Alarm Level	Initial Command to Run	Full Name of MO
PR-MAINT	MIN	test processor a/b sh/l	Maintenance/Tape Processor[1]

1 The full Name of the MO in a 386 system is Maintenance Processor.

NOTE:
For systems with a TN2404/TN790 Processor Circuit Pack use maintenance object PR-MAINT (Maintenance Processor TN2404/TN790 RISC Systems).

The TN786B Processor circuit pack is comprised of the 80386 Processor (PROCR), the Maintenance Processor (PR-MAINT), and the Memory (MEMORY). On the TN786B circuit pack, PR-MAINT is responsible for monitoring the sanity of the 80386 Processor.

The major difference between the two circuit packs is that on the TN786B circuit pack, there is no tape for PR-MAINT to control and Memory is on the circuit pack. The rest of the functionality is the same. On both circuit packs, PR-MAINT contains the hardware required for controlling the environmental conditions. The Maintenance/Tape Processor provides the serial interfaces for the administration terminal and CDR ports. The Maintenance/Tape Processor also provides the communications interface to INADS for alarm reporting and remote maintenance capability.

WARNING:
If the TN786B circuit pack must be replaced, and if there is a blank in the Expansion Memory circuit pack slot (that is, in the slot immediately to the right of the TN786B circuit pack), remove the blank before removing the circuit pack. Otherwise, the circuit pack and/or the two connectors that are used to connect the Expansion Memory circuit pack (if available) might become damaged.

Error Log Entries and Test to Clear Values

Table 10-514. Maintenance/Tape Processor Error Log Entries

Error Type	Aux Data	Associated Test	Alarm Level	On/Off Board	Test to Clear Value[1]
0[2]	0	Any	Any	Any	test processor a/b sh r 1
1 (a)	Any	MTP Reset Test (#101)	MIN	ON	test processor a/b l r 3
257 (b)	Any	MTP Sanity Handshake Test (#106)			test processor a/b r 2
513 (c)	Any	MTP Analog Loop Around Test (#103)	MIN	ON	test processor a/b r 8
769 (d)	Any	MTP Dual Port Ram Test (#104)	MIN	ON	test processor a/b l r 3
1025 (e)	Any	MTP Outpulse Relay Test (#102)	MIN	OFF	test processor a/b r 5
1537 (f)	Any	MTP Manager I Loop Around Test (#228)	MIN	ON	test processor a/b r 3
1793 (g)	Any	MTP Aux Loop Around Test (#229)	MIN	ON	test processor a/b r 3

1 You must manually repeat the command with the “long” option the designated number of times from the administration terminal or from a remote administration terminal because the Sanity Timer Test (#83) logs you off.

2 Run the Short Test Sequence first. If all tests pass, run the Long Test Sequence. Refer to the appropriate test description and follow the recommended procedures.

Notes:

a. The MTP Reset Test (#101) has failed.

b. The MTP Sanity Handshake Test (#106) has failed.

c. The MTP Analog Loop Around Test (#103) has failed.

d. The MTP Dual Port Ram Test (#104) has failed. An error of 769 with an aux data of 5 indicates a hardware problem and testing will not clear it. The circuit pack should be replaced.

e. The MTP Outpulse Relay Test (#102) has failed.

f. The MTP Manager I Loop Around Test (#228) has failed.

g. The MTP Aux Loop Around Test (#229) has failed.

NOTE:
Refer to the FAIL section of each test that fails for further instructions.

System Technician-Demanded Tests: Descriptions and Error Codes

Always investigate tests in the order presented in the table below. By clearing error codes associated with the *MTP Reset Test,* for example, you may also clear errors generated from other tests in the testing sequence.

Order of Investigation	Short Test Sequence	Long Test Sequence	D/ ND[1]
Processor Software Initiated Interrupt Test (#77) (a)	X	X	ND
Processor ROM Checksum Test (#80) (a)	X	X	ND
Processor Non-maskable Interrupt Test (#82) (a)	X	X	ND
Processor Sanity Timer Test (#83) (a)		X	D
MTP Reset Test (#101)		X	D
MTP Dual Port Ram Test (#104)		X	D
MTP Sanity Handshake Test (#106)	X	X	ND
MAP Manager I Loop Around Test (#228)	X	X	ND
MTP Analog Loop Around Test (#103)	X	X	ND
MTP Outpulse Relay Test (#102)	X	X	ND
MTP Aux Loop Around Test (#229)	X	X	ND
Read All Memory Test (#85)(b)		X	ND
Memory Error Detection Test (#87)(b)	X	X	ND
Text Checksum Test (#86)(b)		X	ND
Memory Functional Test (#332) (b)		X	D
Memory Board Check Test (#631) (b)	X	X	ND

1 D = Destructive; ND = Nondestructive

Notes:

a. Refer to PROCR for a description of these tests.

b. Refer to MEMORY [386 systems only] for a description of these tests.

MTP Reset Test (#101)

This test is destructive. The test resets the Maintenance/Tape Processor. The destructive nature of this test causes the following:

- Administration terminal to log off
- CDR port to terminate data transmission
- Any current tape access to terminate and also to tear down any remote access INADS connection

Table 10-515. TEST #101 MTP Reset Test

Error Code	Test Result	Description/Recommendation
1029 2014 2015 2016 2017 2018 2020 2022 2024 2025 2051	ABORT	Refer to STBY-SPE Maintenance documentation for a description of these error codes.
10102	ABORT	System software resources required for this test are not available.
10104	ABORT	Internal system error 1. Retry the command at 1-minute intervals a maximum of 5 times.
10105	FAIL	The MTP did not respond to being reset. 1. Retry the command at 1-minute intervals a maximum of 5 times. 2. If the test continues to fail, replace the Processor circuit pack.

Continued on next page

Table 10-515. TEST #101 MTP Reset Test — *Continued*

Error Code	Test Result	Description/Recommendation
10106	FAIL	The Maintenance/Tape Processor was reset, but it responded with a NOT PASS status, indicating that it did not pass initialization correctly. The MTP is not functioning correctly. The system should continue to function, but it will not have the ability to save translation to tape, or to read tape if the system needs to be rebooted. Environmental monitoring is lost, as is communication with the Standby Processor. 1. Retry the command at 1-minute intervals a maximum of 5 times. 2. If test continues to fail, replace the Processor circuit pack.
	PASS	The Maintenance/Tape Processor was reset, and it passed initialization correctly. The other MTP tests should be examined to verify that the MTP is functioning correctly. 1. Enter **test processor a/b** and verify that the MTP is functioning correctly.

MTP Outpulse Relay Test (#102)

This test is a nondestructive test. The test validates the correct operation of the remote access CO trunk used by INADS. The MTP first goes off-hook, then on-hook on this trunk. If the loop current is detected, the test passes. This test is not allowed if the remote access line is in use.

Table 10-516. TEST #102 MTP Outpulse Relay Test

Error Code	Test Result	Description/Recommendation
1029 2014 2015 2016 2017 2018 2020 2022 2024 2025 2051	ABORT	Refer to STBY-SPE Maintenance documentation for a description of these error codes.
1018	ABORT	The test has been disabled via administration. 1. To enable the test, issue the **change system-parameters maintenance** command, and set the test remote access port field to “y.” (If you have an INADS line, set the field to “y.” If you are testing the Standby PR-MAINT, a **refresh spe-standby** command must be successfully executed before you proceed to Step 2. 2. Rerun the test.
1131	ABORT	INADS port is busy because the system is reporting alarms to INADS, or because INADS is dialed into the system. 1. Wait about ten minutes and then re-enter the command.
10201	ABORT	System software resources required to run this test are not available.
10202	ABORT	Internal system error 1. Retry the command at 1-minute intervals a maximum of 5 times.
10203	ABORT	MTP did not respond to the test request. 1. Repeat the test at 1-minute intervals a maximum of 5 times. 2. If all MTP tests are aborting, execute the **test processor a/b long** command in order to reset MTP and to examine the results of the MTP Reset Test (#101). 3. Replace the Processor circuit pack. 4. If only the MTP outpulse relay test is aborting, escalate the problem.

Continued on next page

Table 10-516. TEST #102 MTP Outpulse Relay Test — *Continued*

Error Code	Test Result	Description/Recommendation
10204	FAIL	MTP reported test failure. No loop current detected. 1. Retry the command at 1-minute intervals a maximum of 5 times. 2. If the test continues to fail, examine the INADS trunk for connectivity, and manually check for loop current. 3. If there is no INADS trunk, this test should be disabled. To disable the test, issue the **change system-parameters maintenance** command, and change the Test Remote Access Port field to “n.” If this test is failing on the Standby SPE, issue the **refresh spe-standby** command, and rerun the test. 4. If the INADS trunk checks out okay, but the test still fails, check the backplane connector wiring. 5. If the backplane wiring checks out okay, replace the Processor circuit pack at your earliest convenience.
	PASS	MTP detected a loop current on the remote access port. 1. If the system cannot call INADS, or INADS cannot contact the system, check with the local Central Office for problems with the INADS trunk, and verify that the INADS number is correct.
10205	ABORT	Internal system error 1. Retry the command at 1-minute intervals a maximum of 5 times.
10206	ABORT	System could not determine if the testing of the INADS port is administered. 1. Enter the **change system-parameters maintenance** command. Verify that the “Test Remote Access Port?” field is set to “y.” 2. Retry the command at 1-minute intervals a maximum of 5 times.
10208	ABORT	The remote access port is busy. INADS is probably dialed into the switch. 1. If INADS is dialed in, the INADS trunk is working. There is no need to run the test.

MTP Analog Loop Around Test (#103)

This test is a nondestructive test. The test does an on-board loop around by using the MTPINADS channel. Test data is sent through the on-board modem out toward the INADS trunk. The data is looped around before the actual trunk, and it comes back into the on-board modem. The data is then verified for integrity.

NOTE:
The test does not send any data onto the INADS trunk. However, in order to pass, the test does require the trunk to be present.

Table 10-517. TEST #103 MTP Analog Loop Around Test

Error Code	Test Result	Description/Recommendation
1029 2014 2015 2016 2017 2018 2020 2022 2024 2025 2051	ABORT	(Refer to STBY-SPE Maintenance documentation for a description of these error codes.)
1018	ABORT	The test has been disabled via administration. 1. To enable the test, issue the **change system-parameters maintenance** command, and set the Test Remote Access Port field to “y”. If you are testing the Standby PR-MAINT, a **refresh spe-standby** command must be successfully executed before you can proceed to Step 2. 2. Rerun the test.
1131	ABORT	The INADS port is busy because the system is reporting alarms to INADS, or because INADS is dialed into the system. 1. Wait about 10 minutes and then re-enter the command.
10301	ABORT	System software resources required for this test are not available.
10302 10309	ABORT	Internal system error 1. Retry the command at 1-minute intervals a maximum of 5 times.

Continued on next page

Table 10-517. TEST #103 MTP Analog Loop Around Test — *Continued*

Error Code	Test Result	Description/Recommendation
10303 10310	ABORT	MTP did not respond to the test request. 1. Repeat test at 1-minute intervals a maximum of 5 times. 2. If only the MTP Analog Loop Around Test is aborting, escalate the problem. 3. If all MTP tests are aborting, execute the **test processor a/b long** command in order to reset MTP, and examine the results of the MTP Reset Test (#101).
10305	ABORT	Internal system error 1. Retry the command at 1-minute intervals a maximum of 5 times.
10306	ABORT	System could not determine if the testing of the INADS port is administered. 1. Enter **change system-parameters maintenance** command, and verify the entry for the Test Remote Access Port field. 2. Retry the command at 1-minute intervals a maximum of 5 times.
10308	ABORT	The remote access port is busy. INADS is probably dialed into the switch. 1. Wait until INADS session is terminated and then re-enter the command.
10311	ABORT	Test #102 MTP Outpulse Relay Test failed. 1. Refer to Error Code 10204 of the MTP Outpulse Relay Test (#102) for directions.
10304	FAIL	MTP reported test failure. The system is not able to reliably contact INADS with alarm data. The system continues to provide good service. 1. If MTP Outpulse Relay Test (#102) is also failing, check for the presence of the INADS trunk, and resolve any INADS trunk problems. 2. If Test #102 passes, the fault is on the Processor circuit pack. The circuit pack should be replaced at your convenience.
	PASS	MTP detected correct data through the loop back connection. 1. If the system cannot call INADS, or if INADS cannot contact the system, check with the local Central Office for problems with the INADS trunk, and verify that the INADS number is correct.

MTP Dual Port Ram Test (#104)

This test is destructive.

The test terminates any PPN Manager I session, and it is a coordinated test of the MTP dual port ram (DPR). The DPR is a section of memory that is shared by the MTP and by the 80286/386 Processor circuit pack. Control messages and data are passed through the DPR. The test forces both sides to read and write the DPR simultaneously in alternate locations.

The DPR test causes the PPN Manager I to log off before the test result is displayed. The test result is determined according to the terminal from which the test is run. If the test is run from the PPN Manager I terminal, system technician should log back in and examine the Error Log for an error against PR-MAINT, with Error Type 769, no Aux Data. This error entry indicates that the MTPDPR Test failed and that the Processor circuit pack should be replaced.

WARNING:
If the TN786B circuit pack must be replaced, and if there is a blank in the Expansion Memory circuit pack slot (that is, in the slot immediately to the right of the TN786B circuit pack), remove the blank before removing the circuit pack. Otherwise, the circuit pack and/or the two connectors that are used to connect the Expansion Memory circuit pack (if available) might become damaged.

If the test is being run from a terminal other than the PPN Manager I (for example, EPN Manager I, remote access, and so forth), the test results are displayed on the screen.

NOTE:
A dial-up (through the INADS port) does not display the results discussed in the previous paragraph. However, a dial-up through data channels does display these results.

Table 10-518. TEST #104 MTP Dual Port Ram Test

Error Code	Test Result	Description/Recommendation
1029 2014 2015 2016 2017 2018 2020 2022 2024 2025 2051	ABORT	(Refer to STBY-SPE Maintenance documentation for a description of these error codes.)
1000	ABORT	System software resources required to run this test are not available. 1. Retry the command at 1-minute intervals a maximum of 5 times.
1030	ABORT	The component on which the test was to be run is on the Standby SPE. This test may be run on this component only when it resides on the Active SPE. 1. For a recommended maintenance procedure, refer to ABORT Error Code 1030 in STBY-SPE Maintenance documentation.
2000	ABORT	Response to the test request was not received within the allowable time period.
2028	ABORT	System software resources required for this test are not available.
2029	ABORT	Internal system error 1. Retry the command at 1-minute intervals a maximum of 5 times.
	FAIL	The dual port RAM is not functioning correctly. Communication between the processor and MTP is lost. The system is not able to report environmental alarms, communicate with the Standby SPE, or reboot from tape, if necessary. 1. Retry the command at 1-minute intervals a maximum of 5 times. 2. If the test continues to fail, replace the Processor circuit pack.
	PASS	Dual port RAM is functioning. Communication exists between the 80286/386 Processor circuit pack and the MTP.

MTP Sanity Handshake Test (#106)

This test is a nondestructive test. The MTP Sanity Handshake Test is simply a query from a maintenance process to the MTP. The MTP must reply for the test to pass.

Table 10-519. TEST #106 MTP Sanity Handshake Test

Error Code	Test Result	Description/Recommendation
1029 2014 2015 2016 2017 2018 2020 2022 2024 2025 2051	ABORT	Refer to STBY-SPE Maintenance documentation for a description of these error codes.
1000	ABORT	System software resources required to run this test are not available.
2033	ABORT	Internal system error 1. Retry the command at 1-minute intervals a maximum of 5 times.
	FAIL	The MTP did not respond to the Sanity Handshake Query. 1. Re-enter command with the “long” option. 2. If the test continues to fail, replace the Processor circuit pack.
	PASS	The MTP responded to the Sanity Handshake Query.

MTP Manager I Loop Around Test (#228)

This test is a nondestructive test. The test places the Manager I channel of the MTP into a loop around mode, and it verifies the data integrity of the channel. Although the test is nondestructive, it causes loss of keyboard input from the PPN Manager I.

Table 10-520. TEST #228 MTP Manager I Loop Around Test

Error Code	Test Result	Description/Recommendation
1029 2014 2015 2016 2017 2018 2020 2022 2024 2025 2051	ABORT	Refer to STBY-SPE Maintenance documentation for a description of these error codes.
1000	ABORT	The system software resources required for this test are not available.
2000	ABORT	Response to the test request was not received within the allowable time period.
2033 2034	ABORT	Internal system error Port busy 1. Retry the command at 1-minute intervals a maximum of 5 times.
	FAIL	The Manager I channel failed the Loop Back Test. The Manager I is probably unusable for administration or maintenance. The EPN Manager I, if available, or remote access can still be used. 1. Repeat the command at one minute intervals a maximum of 5 times. 2. If the test continues to fail, replace the Processor circuit pack at your earliest convenience. Refer to Chapter 1 “Reliability Systems: A Maintenance Aid” for information on how to replace a circuit pack in the control carrier. **WARNING:** *If the TN786B circuit pack must be replaced, and if there is a blank in the Expansion Memory circuit pack slot (that is, in the slot immediately to the right of the TN786B circuit pack), remove the blank before removing the circuit pack. Otherwise, the circuit pack and/or the two connectors that are used to connect the Expansion Memory circuit pack (if available) might become damaged.*
	PASS	The Manager I channel passed the Loop Back Test. 1. If the PPN Manager I is not usable, check the Manager I itself, along with the cabling.

MTP Auxiliary Loop Around Test (#229)

This test is a nondestructive test. The test places the Auxiliary channel of the MTP into a loop around mode, and it verifies the data integrity of the channel. The Auxiliary channel is used as the CDR output port.

Table 10-521. TEST #229 MTP Auxiliary Loop Around Test

Error Code	Test Result	Description/Recommendation
1029 2014 2015 2016 2017 2018 2020 2022 2024 2025 2051	ABORT	Refer to STBY-SPE Maintenance documentation for a description of these error codes.
1000	ABORT	The system software resources required for this test are not available. 1. Retry the command at 1-minute intervals a maximum of 5 times.
1018	ABORT	The test has been disabled via administration. The **change system-parameters cdr** command needs to administer CDR.
2000	ABORT	Response to the test request was not received within the allowable time period.
2033 2034	ABORT	Internal system error Port busy Retry the command at 1-minute intervals a maximum of 5 times.

Continued on next page

Table 10-521. TEST #229 MTP Auxiliary Loop Around Test — *Continued*

Error Code	Test Result	Description/Recommendation
22902 22903	ABORT	The system software resources required for this test are not available. 1. Retry the command at 1-minute intervals a maximum of 5 times.
	FAIL	The Auxiliary channel failed the Loop Back Test. The AUX port is probably not sending any auxiliary data to the auxiliary collection device. 1. Retry the command at 1-minute intervals a maximum of 5 times. 2. If test continues to fail, replace the Processor circuit pack.
	PASS	The Auxiliary channel passed the Loop Back Test. The auxiliary port is functioning correctly. 1. If no auxiliary data is being recorded, check the auxiliary collection device, and verify that it has been set up and connected correctly.

PR-MEM (TN2404/TN790 RISC Memory)

MO Name (in Alarm Log)	Alarm Level	Initial Command to Run	Full Name of MO
PR-MEM[1]	MAJOR	test memory a/b lo c	TN2404/TN790 RISC Memory
PR-MEM[1]	MINOR	test memory a/b sh c	TN2404/TN790 RISC Memory

1 The MO is “PR-MEM” because all of the Memory used by the Processor is on the TN2404/TN790 Processor circuit pack.

The TN2404/TN790 RISC Memory contains the DEFINITY software and firmware. The Processor circuit pack is the most critical component in the system.

For testing purposes, the circuit pack is logically separated into PR-MAINT, PROCR, and PR-MEM. This means that a memory problem requires that the Processor be replaced. These systems contain two types of memory: Flash ROM and DRAM. Flash ROM is memory that contains the boot image, part of the low-level maintenance firmware, PI firmware, and PACCON firmware. This type of memory is not erased during circuit pack resets. It can be reprogrammed via the **upgrade software** command or a Reset System 4/5 using a software memory card.

One section of the Flash ROM (BOOTPROM) containing the system initialization functions and the low-level diagnostic programs is programmed at the factory and is not reprogrammed by the **upgrade software** command. DRAM is used for software data storage, and it changes constantly. Both types of memory are present on the Processor circuit pack. The diagnostics run appropriate tests on both memories.

DRAM is replaceable and installed in 3 Single In-line Memory Module (SIMM) sockets on this circuit pack. Replacement of these SIMMs is described in “Install the SIMM on the TN2404/TN790 Processor Circuit Pack” in Chapter 5, ‘‘Routine Maintenance Procedures’’.

For all system activity, the Processor must be able to access the Memory. If the Processor cannot do this, the system goes into SPE-down mode. In SPE-down mode, fatal Memory errors may show up as Processor errors. This merely indicates that the Processor and the Memory are very closely linked as a matter of course.

If the initialization diagnostics fail, refer to the “Procedure for SPE-Down Mode” section in Chapter 4, ‘‘Initialization and Recovery’’.

Error Log Entries and Test to Clear Values

Table 10-522. Memory Error Log Entries

Error Type	Aux Data	Associated Test	Alarm Level	On/Off Board	Test to Clear Value
0[1]	0	Any	Any	Any	test memory a/b l r 1
1	Any	Flash Memory Checksum Test (#86)	MAJOR	ON	test memory a/b l r 5
3(a)	Any	Flash Memory Checksum Test (#86)	MAJOR	ON	test memory a/b l r 5
1025	Any	Memory Parity Error Detection Test (#87)	MINOR	ON	test memory a/b r 3
1281	Any	Memory Burst Read Test (#908)	MAJOR	ON	test memory a/b l r 2
1793	Any (b)(c)	Read All Memory (#85)	MAJOR	ON	test memory a/b l r 1
2049(d)	Any (b)(c)	Memory Functional Test (#332)	MAJOR	ON	test memory a/b l r 1

1 Run the Short Test Sequence first. If all tests pass, run the Long Test Sequence. Refer to the appropriate test description and follow the recommended procedures.

Notes:

a. This error (3) indicates that a software patch has been applied and either the software patch is bad or was installed incorrectly.

1. Back out the software patch and run the **test memory UUCS long** command to verify that the problem has been cleared.

2. If the PBX system is equipped with High Reliability or Critical Reliability option (i.e. with duplicated SPEs), and this error occurs, a SPE interchange will occur if the health of the standby SPE permits the interchange.

b. The following Aux Data indicate SIMM Failures

1. SIMM A
2. SIMM B
3. SIMM A & SIMM B
4. SIMM C
5. SIMM A & SIMM C
6. SIMM B & SIMM C
7. SIMM A, SIMM B, & SIMM C

c. Aux Data of 100 is an LMM Flash Checksum initialization failure.

d. There are Functional Memory Test errors against the Processor circuit pack. This test is run only on the Standby SPE in a High or Critical Reliability system. On other systems or on the Active SPE, the test is run only via a **reset system 4** command or a **reset system 5** command.

System Technician-Demanded Tests: Descriptions and Error Codes

Always investigate errors in the order in which they are presented in the table that follows when you are inspecting errors in the system. By clearing error codes associated with the *Read All Memory Test,* for example, you may also clear errors generated from other tests in the testing sequence.

Order of Investigation	Short Test Sequence	Long Test Sequence	D/ND[1]
Processor Cache Test (#895)(a)		X	ND
Processor Cache Audit (#896)(a)	X	X	ND
Processor Bus Time-out Exception Test (#82)(a)	X	X	ND
Processor BOOTPROM Checksum Test (#897)(a)	X	X	ND
Processor Write Buffer Test (#900)(a)	X	X	ND
Memory Burst Read Test (#908)	X	X	ND
Read All Memory Test (#85)		X	ND
Memory Parity Error Detection Test (#87)	X	X	ND
Flash Memory Checksum Test (#86)		X	ND
Memory Functional Test (#332) (b)		X	D
MTP Outpulse Relay Test (#102) (c)	X	X	ND
MTP External Modem Present Test (#230) (c)	X	X	ND
MTP Analog Loop Around Test (#103) (c)	X	X	ND
MTP Sanity Handshake Test (#106) (c)	X	X	ND
MTP SAT Loop Around Test (#228) (c)	X	X	ND
MTP Aux Loop Around Test (#229) (c)	X	X	ND
MTP Reset Test (#101) (c)		X	D
MTP Dual Port Ram Test (#104) (c)		X	D

1 D = Destructive; ND = Nondestructive

Notes:

a. Refer to PROCR (TN2404/TN790 RISC Processor) Maintenance documentation for a description of these tests.

b. This test is run only on the Standby SPE in a High or Critical Reliability system. On other systems or on the Active SPE, the test is run only via a **reset system 4** command or a **reset system 5** command.

c. Refer to PR-MAINT (MainTenance Processor) Maintenance documentation for a description of these tests.

Read All Memory Test (#85)

This test is a nondestructive test. The test reads every memory location in memory. A failure of this test indicates a DRAM failure in the Processor circuit pack. DRAM is replaceable and installed in 3 Single Inline Memory Module (SIMM) sockets on this circuit pack. Replacement of these SIMMs is described in the “Circuit Pack Replacement Procedure” section.

Table 10-523. TEST #85 Read All Memory Test

Error Code	Test Result	Description/Recommendation
100	ABORT	The requested test did not complete within the allowable time period. 1. Retry the command.
1029 2014 2015 2016 2017 2018 2020 2022 2024 2025 2051	ABORT	Refer to STBY-SPE Maintenance documentation for a description of these error codes.
2500	ABORT	Internal system error 1. Retry the command.

Continued on next page

Table 10-523. TEST #85 Read All Memory Test — *Continued*

Error Code	Test Result	Description/Recommendation
1 - 7	FAIL	If the system can still provide service, this indicates that the Processor circuit pack has a problem with memory or the RISC processor, but can still function. At the customers convenience run the destructive "**reset system 4**" command to boot the system and write to all of the memory locations. This will clear transient parity errors and test for permanent parity errors. This complete memory testing during initialization will cause "SPE DOWN" if a parity error is detected and the PROCR circuit pack should be replaced. If parity errors reoccur within several weeks, record the error code information indicating which memory modules failed, together with the extended interval between failures. After recording the information and at the customers convenience replace the PROCR circuit pack. (Note that if you replace the Processor circuit pack, you need to obtain a new license file.)
	PASS	The Memory is healthy.

Flash Memory Checksum Test (#86)

This test is a nondestructive test. The test computes the checksum of the DEFINITY Generic 3 software and firmware loaded from the Software Memory Card (SOFTWARE MEM-CARD). A failure of this test indicates corruption of the Flash Memory. However, this failure does NOT always indicate a hardware problem. **DO NOT REPLACE** the Processor circuit pack when this is the only error. A system restart via the **reset system 4** command starting with inserting the Software Memory Card for this system followed by re-inserting the Translation Memory Card memory card should be implemented at the customer's earliest convenience.

In a High or Critical Reliability system, an **upgrade software** command can be used with the Software Memory Card for the system followed by re-inserting the Translation Memory Cards as directed by this upgrade procedure. This command performs the same operation as the **reset system 4** command but is much less service-disruptive.

Table 10-524. TEST #86 Text Checksum Test

Error Code	Test Result	Description/Recommendation
100	ABORT	The test did not complete within the allowable time period. 1. Retry the command.
1029 2014 2015 2016 2017 2018 2020 2022 2024 2025 2051	ABORT	Refer to STBY-SPE Maintenance documentation for a description of these error codes.
2500	ABORT	Internal system error 1. Retry the command.
1 - 7	FAIL	The system may or may not continue to operate correctly. The system may fail later when some action requires access to the corrupted area of the Text. 1. The Flash ROM should be reprogrammed via the **upgrade software** command. The memory card should contain the same vintage software that is currently in the system. Refer to the “Software Upgrade” section in this manual. 2. If the test continues to fail, replace the TN2404/TN790 Processor circuit pack and repeat step 1. (Note that if you replace the Processor circuit pack, you need to obtain a new license file.)
	PASS	The checksum is correct.

Memory Parity Error Detection Test (#87)

This test is a nondestructive test. The test is run on a few reserved locations in memory. A failure of this test indicates a failure on the Processor circuit pack.

This test determines if the parity circuitry is working. Accordingly, the test determines if parity errors can be detected. The parity circuitry is used to detect DRAM memory failures.

Table 10-525. TEST #87 Memory Parity Error Detection Test

Error Code	Test Result	Description/Recommendation
100	ABORT	The test did not complete within the allowable time period. 1. Retry the command.
1029 2014 2015 2016 2017 2018 2020 2022 2024 2025 2051	ABORT	Refer to STBY-SPE Maintenance documentation for a description of these error codes.
2500	ABORT	Internal system error 1. Retry the command.
1 - 7	FAIL	The parity detection circuitry is not working correctly. If the system can still provide service, this indicates that the Processor circuit pack has a problem but can still function. 1. The TN2404/TN790 Processor circuit pack should be replaced. The failure is identifying the PROCR as being bad and only the PROCR circuit pack needs to be replaced. (Note that if you replace the Processor circuit pack, you need to obtain a new license file.)
	PASS	The parity detection circuitry is working.

Memory Functional Test (#332)

This test is destructive.

This test ensures that every DRAM memory location can be accessed and changed independently. Running this test wipes out all data in DRAM memory. This test is performed during a **reset system 4** or **reset system 5**. If the test fails during a **reset system** command, refer to the "Procedure for SPE-Down Mode" in the Chapter 4, "Initialization and Recovery" for the recommended maintenance strategy. This test can be run as a long demand test on the standby SPE.

Table 10-526. TEST #332 Memory Functional Test

Error Code	Test Result	Description/Recommendation
100	ABORT	The test did not complete within the allowable time period. 1. Retry the command.
1000	ABORT	System resources required to run this test are not available. 1. Retry the command at 1-minute intervals a maximum of 3 times.
1029 2014 2015 2016 2017 2018 2020 2022 2024 2025 2051	ABORT	Refer to STBY-SPE Maintenance documentation for a description of these error codes.
1 - 7	FAIL	The Standby SPE Processor circuit pack is defective. 1. Repeat the command at 1-minute intervals a maximum of 5 times. 2. If the test still shows a failure, replace the Processor circuit pack. (Note that if you replace the Processor circuit pack, you need to obtain a new license file.)
	PASS	The Standby SPE Processor circuit pack is healthy.

Memory Burst Read Test (#908)

This test verifies that the Memory Burst Read function works properly on the Processor circuit pack.

Table 10-527. TEST #908 Memory Burst Read Test

Error Code	Test Result	Description/Recommendation
100	ABORT	The test did not complete within the allowable time period. 1. Retry the command.
1022 1335 2500	ABORT	Internal system error 1. Retry the command.
1029 2014 2015 2016 2017 2018 2020 2022 2024 2025 2051	ABORT	Refer to STBY-SPE Maintenance documentation for a description of these error codes.
1 - 7	FAIL	The Burst Read circuit is not functioning properly. 1. If the test fails, replace the Processor and retry the test. (Note that if you replace the Processor circuit pack, you need to obtain a new license file.)
	PASS	The Burst Read portion of the Processor circuit pack is operating correctly.

PRI-CDR/SEC-CDR (PRI-CDR Link)

MO Name (in Alarm Log)	Alarm Level	Initial Command to Run	Full Name of MO
PRI-CDR/SEC-CDR	MINOR	test cdr-link primary/secondary l	CDR Link
PRI-CDR/SEC-CDR	WARNING	test cdr-link primary/secondary	CDR Link

The CDR feature records detailed call information on all incoming and outgoing calls on specified trunk groups and sends this information to an CDR output device. The two physical links can be administered for connecting external CDR output devices to the system. They are identified as the primary CDR (PRI-CDR) link and the secondary CDR (SEC-CDR) link. The CDR link can be administered to a data extension or the EIA port on the system TN773 Processor circuit pack which provides a standard EIA-232C interface. The external CDR output devices are:

- 94A Local Storage Unit (LSU)
- TELESEER CDR Unit
- Call Accounting System (CAS)
- Call Detail Recording Unit (CDRU)
- Printer
- Host computer
- Personal computer (PC)
- Customer-provided equipment

Refer to *DEFINITY Enterprise Communications Server Administrator's Guide*, for details of the CDR feature.

CDR Link Maintenance provides a strategy for maintaining the link between the system and an external CDR output device. The strategy includes a set of tests for periodic diagnosis, detection of errors during normal operation, actions for troubleshooting, and raising alarms for serious problems. CDR Link Maintenance uses a try-and-wait mechanism for maintaining the CDR link. If the CDR link is torn down due to an error, CDR Link Maintenance intends to bring the CDR link up. If the Link Setup trial fails, CDR Link Maintenance waits 30 seconds before the next retry. If the number of retries reaches the value of a threshold (two), a Minor alarm is raised for service attention.

The following physical configurations are supported for the CDR link:

- From the EIA port of Processor circuit pack to an CDR output device through the standard EIA-232C interface.
- From a data channel on TN777 Network Control circuit pack to a data extension where the CDR output device connects via the standard EIA 232C interface.

  The data extension can be a PDM, MPDM, DTDM, or ADU. The PDM, MPDM, and DTDM connect to a Digital Line Port of TN754 or TN754B Digital Line circuit pack; ADU connects to a Data Line Port of TN726 Data Link circuit pack.

  NOTE:
  In duplicated systems it is possible for a failure on one of the processor circuit packs to bring down the CDR link even if it is the standby processor. This problem can not be resolved by interchanging processors because the CDR ports on each of the processor circuit packs are connected via WIRE-OR.

CDR Link Maintenance does not cover the maintenance of the elements composing the CDR physical link, which are as follows:

- External CDR output device
- EIA port on Processor circuit pack
- Data Module (PDM/MPDM/DTDM) and Digital Line Port of TN754 or TN754B Digital Line circuit pack
- ADU and Data Line Port of TN726 Data Link circuit pack
- Data Channels on TN777 Network Control circuit pack

If CDR Link Maintenance cannot restore the CDR link, then the maintenance tests of these individual components of the CDR link must be executed to diagnose faults.

Procedures for Restoring the CDR Link

1. Get the status of CDR links.

   Enter **status cdr-link** command and make sure that the CDR links are not busied out for maintenance. If the link is down, then continue to the next step.

2. Where does the CDR link connect to?

   Enter **display system feature** and find out the destinations of CDR links. Continue to the next step.

3. Is the destination an extension or the EIA port?

   If the destination is an extension number, then enter the **status data extension** command and verify whether the data extension is in the in-service/idle state. If the data extension is NOT available, then look for the extension number in Alt Name field of Hardware Error Log and refer to XXX-BD (Common Port Circuit Pack) Maintenance documentation for resolutions.

   If the destination is “eia,” then look for PR-MAINT errors in the Hardware Error Log. If present, refer to PR-MAINT (Maintenance/Tape Processor) Maintenance documentation.

4. Is a data channel on TN777 Network Control circuit pack in the in-service/idle state?

   Enter **list data** command and find out the extension numbers of data channels on TN777 Network Control circuit pack. Enter **status data extension** command and make sure that at least one data channel is in the in-service/idle state. If no data channel is available, then look for DATA-CHL/DATA-CON/DATA-BD errors in the Hardware Error Log. If present, refer to DATA-BD (Network Control Circuit Pack).

5. Is the external CDR output device available?

   Make sure that the CDR output device is on-line and ready for service. Check the physical connectivity between Data Module and the CDR output device or between the EIA port on backplane of the switch and the CDR output device.

It is recommended to busy out the CDR link before executing maintenance tests over the CDR link. If the CDR link is busied out, then all CDR link maintenance actions are deactivated. The interference to tests of other MO is off.

Error Log Entries and Test to Clear Values

Table 10-528. CDR Link Maintenance Error Log Entries

Error Type	Aux Data	Associated Test	Alarm Level	On/Off Board	Test to Clear Value
0[1]	0	Any	Any	Any	test cdr-link primary|secondary sh
18 (a)	0	busy out cdr	WARNING	OFF	release cdr-link primary|secondary
		primary|secondary			
25 (b)	0 3 to 6 9 99 255	Link Retry Test (#215)	MINOR/ WARNING[2]	OFF	test cdr-link primary|secondary l
513 (c)	0 3 to 6 9				test cdr-link primary|secondary
1025 (d)					
1281 (e)					

1 Run the Short Test Sequence first. If all tests pass, run the Long Test Sequence. Refer to the appropriate test description and follow the recommended procedures.

2 Minor alarms on this MO may be downgraded to Warning alarms based on the value used in the **set options** command.

Notes:

a. System Technician has busied out the CDR link to out-of-service state. The CDR link is torn down.

b. Link Retry Test (#215) fails. The Aux Data field contains either the Channel ID of Data Channels on the TN777 circuit pack (that is, 3 for Channel 01, 4 for Channel 02, 5 for Channel 03, 6 for Channel 04, and 9 for EIA port) or an Error Code of 99 indicating that no data channels are available for setting up the link, or an Error Type of 255 indicating an internal system error. Refer to the preceding "Procedures for Restoring the CDR Link" for resolution.

c. The CDR physical link is down due to the following causes: cable to the CDR output device is disconnected; CDR output device is powered off, the data extension where the CDR output device connects to has been busied out or there is a scheduled daily interchange. The Aux Data field contains the Channel ID of Data Channels on the TN777 circuit pack (that is, 3 for Channel 01, 4 for Channel 02, 5 for Channel 03, 6 for Channel 04, and 9 for EIA port). Check the connectivity of wire and cable among wall jacket, data module, and the CDR output device. Enter **status data extension** and verify that the data extension of the CDR output device is in the in-service/idle state. If the data extension is not available, then refer to the preceding ''Procedures for Restoring the CDR Link'' for resolution. Issue the **display system-parameters-maintenance** command to see the start time of daily maintenance. If the error occurs and is resolved during the interval of daily maintenance, then the error can be ignored.

d. This error indicates that the CDR output device is in an off-line state, for example, paper jam or paper out for a printer device. The CDR link is torn down. Check the CDR output device and act promptly to put it back to on-line state. Enter **test cdr-link primary|secondary** command to set up the CDR link.

e. Software detects an overflow of CDR records generated in the switch due to the heavy trunk traffic and low speed CDR output device. If both primary and secondary links are ON, the secondary link is torn down temporarily for two minutes to speed up the output process to the primary link. No action is necessary for this error type.

System Technician-Demanded Tests: Descriptions and Error Codes

Always investigate tests in the order presented in the table below when inspecting errors in the system. By clearing error codes associated with the *Link Retry Test*, for example, you may also clear errors generated from other tests in the testing sequence.

Order of Investigation	Short Test Sequence	Long Test Sequence	D/ND[1]
Link Tear Down Test (#213)		X	D
Link Retry Test (#215)	X	X	ND

1 D = Destructive; ND = Nondestructive

Link Tear Down Test (#213)

This test is destructive.

This test disconnects the existing link between the system and the external CDR output device. If the link has been disconnected already, this test just returns PASS. All resources allocated for an CDR link are released after this test.

Table 10-529. TEST #213 Link Tear Down Test

Error Code	Test Result	Description/Recommendation
40	ABORT	Internal system error
50	ABORT	Internal system error 1. Retry the command at 1-minute intervals a maximum of 5 times.
1010	ABORT	The CDR link has been busied out to out-of-service. 1. Enter the **release cdr-link primary|secondary** command to release the CDR link from busyout state. 2. Retry the **test cdr-link primary|secondary long** command to execute the test.
	FAIL	Internal system error 1. Retry the command at 1-minute intervals a maximum of 5 times.
	PASS	The CDR link is torn down.

Link Retry Test (#215)

This test sends a message to the CDR software process to make a data call to the extension where the CDR output device connects to or opens the EIA port to the CDR output device. If the CDR link is already up, this test is passed without making any data call or opening the EIA port.

Table 10-530. TEST #215 Link Retry Test

Error Code	Test Result	Description/Recommendation
10	ABORT	Internal system error
20	ABORT	Internal system error. Internal error in Maintenance Action Process (MAP). MAP returns an error back to maintenance script (HMM). Timer expires while waiting for the reply from MAP. 1. Retry the command at 1-minute intervals a maximum of 5 times.
30	ABORT	Internal system error 1. Refer to "Procedures for Restoring the CDR Link".
1010	ABORT	The CDR link has been busied out to out-of-service. 1. Enter **release cdr-link primary|secondary** command to release the CDR link from busyout state. 2. Retry **test cdr-link primary|secondary long** command to execute the test.
	FAIL	The CDR link CANNOT be established. 1. Refer to the "Procedures for Restoring the CDR Link" for instructions.
	PASS	The CDR link is up.

PROC-SAN (Process Sanity Audits)

MO Name (in Alarm Log)	Alarm Level	Initial Command to Run	Full Name of MO
PROC-SAN	none	none	Process Sanity Audits

The Process Sanity Audits MO is responsible for monitoring the sanity of software processes in the system. If the Process Sanity Audits MO detects that a process has gone insane (does not respond to a sanity message within an allotted time period), the process is restarted. If the Process Sanity Audits MO detects that multiple processes (or a single key process) do not respond to sanity messages within an allotted time period, a system recovery action is initiated.

The Process Sanity Audits MO has no alarms and no tests. Certain errors are logged to the Hardware Error Log for information purposes only.

Error Log Entries and Test to Clear Values

Table 10-531. Process Sanity Audits Error Log Entries

Error Type	Aux Data	Associated Test	Alarm Level	On/Off Board	Test to Clear Value
0[1]	0	Any	Any	Any	none
10 (a)	0	none	none	none	none
204 (a)	any	none	none	none	none

1 Look for other errors of the same type and deal with them accordingly.

Notes:

a. These errors indicate that a system recovery action has been taken because one or more software processes failed to respond to a sanity audit in a timely fashion. As a result of the recovery action, the system may have temporarily suspended service for a period of time surrounding the error.

PROCR (Processor Circuit Pack)

MO Name (in Alarm Log)	Alarm Level	Initial Command to Run	Full Name of MO
PROCR	MAJOR	test processor a/b sh r/c	Processor Circuit Pack

NOTE:
For systems with a TN2404/TN790 RISC Processor circuit pack see maintenance object ''PROCR (TN2404/TN790 RISC Processor Circuit Pack)''.

NOTE:
Alarms on the MEM-BD [386 systems only], PROCR and PR-MAINT maintenance objects (MOs) are indicated by the red LED on the Processor circuit pack.

The TN786B has an 80386 processor that uses on-board flash ROM and DRAM memory. The TN786B Processor circuit pack is comprised of the 80386 Processor (PROCR), the MainTenance Processor (PR-MAINT) and Memory (MEM-BD).

The TN786B Processor circuit pack is responsible for the execution of the DEFINITY software. This includes all of the call processing, maintenance, and administration functions. The Processor circuit pack is the most critical component to proper operation of the system.

The PR-MAINT is responsible for monitoring the sanity of the Processor circuit pack as well as the environmental conditions. The PR-MAINT provides the serial interfaces for the administration terminal and for the Call Detail Recording (CDR) ports. The PR-MAINT also provides the communications interface to INADS for alarm reporting and remote maintenance capability.

In High and Critical Reliability systems, the PR-MAINT is part of the communications path between the Active Processor Element and the Standby Processor Element.

Error Log Entries and Test to Clear Values

Table 10-532. 80286/386 Processor Circuit Pack Error Log Entries

Error Type	Aux Data	Associated Test	Alarm Level	On/ Off Board	Test to Clear Value[1]
0[2]	0	Any	Any	Any	test processor a/b r 1
1 (a)	0	Software Initiated Interrupt Test (#77)	MAJOR	ON	test processor a/b r 3
769 (b)	0	ROM Checksum Test (#80)	MAJOR	ON	test processor a/b r 5
1025 (c)	0	Processor Non-maskable Interrupt Test (#82)	MAJOR	ON	test processor a/b r 2
1281 (d)	0	Processor Sanity Timer Test (#83)	MAJOR	ON	test processor a/b l r 2

1 Software does not accept the repeat option on the TN773 circuit pack [G3iV1.1-286]. The repeat option is valid only on the TN786B circuit pack. You must manually repeat the command with the long option the designated number of times from the administration terminal and from a remote SAT because the Sanity Timer Test (#83) logs you off. In G3iV1.1-286, if the **test processor long** System Technician command is executed six times back-to-back, the system goes into SPE-DOWN mode.

2 Run the Short Test Sequence first. If all tests pass, run the Long Test Sequence. Refer to the appropriate test description and follow the recommended procedures.

Notes:

a. The Software Initiated Interrupt Test (#77) failed. Refer to the FAIL condition of this test for further action.

b. The ROM Checksum Test (#80) failed. Refer to the FAIL condition of this test for further action.

c. The Processor Non-maskable Interrupt Test (#82) failed. Refer to the FAIL condition of this test for further action.

d. The Processor Sanity Timer Test (#83) failed. Refer to the FAIL condition of this test for further action.

System Technician-Demanded Tests: Descriptions and Error Codes

Always investigate tests in the order presented in the table below when you are inspecting errors in the system. By clearing error codes associated with the *Processor Non-maskable Interrupt Test,* for example, you may also clear errors generated from other tests in the testing sequence.

Order of Investigation	Short Test Sequence	Long Test Sequence	D/ ND[1]
Processor Non-maskable Interrupt Test (#82)	X	X	ND
Processor ROM Checksum Test (#80)	X	X	ND
Processor Software Initiated Interrupt Test (#77)	X	X	ND
Processor Sanity Timer Test (#83)		X	D
MTP Outpulse Relay Test (#102) (a)	X	X	ND
MTP Analog Loop Around Test (#103) (a)	X	X	ND
MTP Sanity Handshake Test (#106) (a)	X	X	ND
MTPSAT Loop Around Test (#228) (a)	X	X	ND
MTP Aux Loop Around Test (#229) (a)	X	X	ND
MTP Reset Test (#101) (a)		X	D
MTP Dual Port Ram Test (#104) (a)		X	D
Read All Memory Test (#85)(b)		X	ND
Memory Error Detection Test (#87)(b)	X	X	ND
Text Checksum Test (#86)(b)		X	ND
Memory Functional Test (#332) (c)(b)		X	D
Memory Board Check Test (#631) (b)	X	X	ND

1 D = Destructive; ND = Nondestructive

Notes:

a. Refer to PR-MAINT (Maintenance/Tape Processor) Maintenance documentation for a description of these tests.

b. Refer to MEMORY [386 systems only] Maintenance documentation for a description of these tests.

Processor Software Initiated Interrupt Test (#77)

This test is a nondestructive test. The test verifies if the 80286/386 Processor can exercise the three types of software-initiated interrupts:

- Divide by zero
- Single step
- One byte interrupt instruction.

Table 10-533. TEST #77 Processor Software Initiated Interrupt Test

Error Code	Test Result	Description/Recommendation
1029 2014 2015 2016 2017 2018 2020 2022 2024 2025 2051	ABORT	Refer to STBY-SPE Maintenance documentation for a description of these error codes.
	FAIL	The processor did not detect the software interrupt condition. As a result, the processor executed the incorrect interrupt vector. The system may or may not continue to operate correctly. 1. Repeat the command at 1-minute intervals a maximum of 5 times. 2. If the test continues to fail, the Processor circuit pack should be replaced. (Note that if you replace the Processor circuit pack, you need to obtain a new license file.) **WARNING:** *If the TN786B circuit pack [386 systems only] must be replaced, and if there is a blank in the Expansion Memory circuit pack slot (that is, in the slot immediately to the right of the TN786B circuit pack), remove the blank before removing the circuit pack. Otherwise, the circuit pack and/or the two connectors that are used to connect the Expansion Memory circuit pack (if available) might become damaged.*
	PASS	The processor detected the software interrupt condition, and it executed the correct interrupt vector. The system continues to operate correctly.

Processor ROM Checksum Test (#80)

This test is a nondestructive test. The test computes the checksum of the processor's bootstrap ROM, and it compares this checksum to a predetermined value stored within the ROM. A failure of this test indicates corruption of the ROM.

Table 10-534. TEST #80 Processor ROM Checksum Test

Error Code	Test Result	Description/Recommendation
1029 2014 2015 2016 2017 2018 2020 2022 2024 2025 2051	ABORT	Refer to STBY-SPE Maintenance documentation for a description of these error codes.
	FAIL	The computed checksum did not match the ROM checksum. The system may or may not continue to operate correctly. The system may fail later when some action requires access to the corrupted area of the bootstrap ROM. 1. The Processor circuit pack should be replaced. (Note that if you replace the Processor circuit pack, you need to obtain a new license file.) **WARNING:** *If the TN786B circuit pack [386 systems only] must be replaced, and if there is a blank in the Expansion Memory circuit pack slot (that is, in the slot immediately to the right of the TN786B circuit pack), remove the blank before removing the circuit pack. Otherwise, the circuit pack and/or the two connectors that are used to connect the Expansion Memory circuit pack (if available) might become damaged.*
	PASS	The computed checksum matched the ROM checksum. The system continues to operate normally.

Processor Non-maskable Interrupt Test (#82)

This test is a nondestructive test. The test is used to verify that the 80286/386 Processor can detect and respond to non-maskable interrupts. For example, the processor intentionally causes a BUS TIMEOUT EXCEPTION (BTE) and then verifies if it vectors to the correct interrupt routine. This is basically a test of the internal operation of the 80286/386 CPU chip.

Table 10-535. TEST #82 Processor Non-maskable Interrupt Test

Error Code	Test Result	Description/Recommendation
1029 2014 2015 2016 2017 2018 2020 2022 2024 2025 2051	ABORT	Refer to STBY-SPE Maintenance documentation for a description of these error codes.
	FAIL	The interrupt was not detected or acted upon. 1. Retry the command at 1-minute intervals a maximum of 5 times. 2. If the test continues to fail, the Processor circuit pack should be replaced. (Note that if you replace the Processor circuit pack, you need to obtain a new license file.) **WARNING:** *If the TN786B circuit pack [386 systems only] must be replaced, and if there is a blank in the Expansion Memory circuit pack slot (that is, in the slot immediately to the right of the TN786B circuit pack), remove the blank before removing the circuit pack. Otherwise, the circuit pack and/or the two connectors that are used to connect the Expansion Memory circuit pack (if available) might become damaged.* 3. If replacement of the Processor circuit pack still results in test failure, the following circuit packs should be replaced, one at a time in the order provided: TN770 Memory [G3iV1.1-286 only] Expansion Memory [G3iV2-386 only] TN765 Processor Interface, TN777B Network Control, TN778 Packet Control, and TN772 Duplication Interface circuit packs. The test should then be repeated. 4. If the test still fails after you replace all the circuit packs discussed in the previous step, the problem must be in the control carrier, and the carrier should be replaced.
	PASS	The interrupt was correctly detected. The 80286/386 CPU chip is functioning correctly.

Processor Sanity Timer Test (#83)

This test is destructive.

This test causes service to be disrupted for about seven seconds on the TN773 and for about one second on the TN786B. During this time, the system does not respond to any user action.

This test checks to see if the 80286/386 processor watch-dog sanity timer is functioning correctly. The processor intentionally allows the sanity timer to time out. If the processor detects itself being reset, the test passes, and the processor continues to execute normally. If the processor does not detect a reset, the test has failed. If this test continues to fail, the processor pack should be replaced as soon as possible. The sanity timer is not critical to system operation, but it is needed for processor recovery if the processor stops functioning.

Table 10-536. TEST #83 Processor Sanity Timer Test

Error Code	Test Result	Description/Recommendation
1000	ABORT	System software resources required for this test are not available. 1. Retry the command at 1-minute intervals a maximum of 5 times.
1029 2014 2015 2016 2017 2018 2020 2022 2024 2025 2051	ABORT	Refer to STBY-SPE Maintenance documentation for a description of these error codes.
	FAIL	The sanity timer did not time out as expected. The system continues to function normally. If the processor gets into an infinite loop, the reset CANNOT be detected, and the system DOES NOT reboot itself to clear the problem. 1. Retry the command at 1-minute intervals a maximum of 5 times. 2. If test continues to fail, the Processor circuit pack should be replaced as soon as possible. (Note that if you replace the Processor circuit pack, you need to obtain a new license file.)
	PASS	The sanity timer went off as expected. The system continues to function normally. If the processor gets into an infinite loop, the reset IS detected, and the system reboots itself to clear the problem.

PROCR (TN2404/TN790 RISC Processor Circuit Pack)

MO Name (in Alarm Log)	Alarm Level	Initial Command to Run	Full Name of MO
PROCR	MAJOR	test processor a/b lo r/c	TN2404/TN790 RISC Processor Circuit Pack
PROCR	MINOR	test processor a/b sh r/c	TN2404/TN790 RISC Processor Circuit Pack

NOTE:
For systems with the TN786B Processor circuit pack, see maintenance object, "PROCR (Processor Circuit Pack)".

NOTE:
Alarms on the PR-MEM, PROCR and PR-MAINT maintenance objects (MOs) are indicated by the red LED on the Processor circuit pack.

This section applies to the TN2404/TN790. The TN2404/TN790 has a RISC processor (PROCR) that uses on-board Flash ROM and DRAM memory (PR-MEM). This circuit pack also contains the MainTenance Processor (PR-MAINT).

The RISC Processor circuit pack portion is responsible for the execution of the DEFINITY Generic 3 software package. This includes all of the call processing, maintenance, and administration functions. The RISC Processor circuit pack is the most critical component to the correct operation of the system.

The PR-MAINT (MainTenance Processor for RISC systems) is responsible for monitoring the sanity of the RISC Processor circuit pack and the environmental conditions. The PR-MAINT provides the serial interfaces for the SAT and for the Digital Communications Equipment (DCE) ports. The PR-MAINT also provides the communications interface to INADS for alarm reporting and remote maintenance capability.

In High and Critical Reliability systems, the PR-MAINT is part of the communications path between the Active Processor Element and the Standby Processor Element.

Error Log Entries and Test to Clear Values

Table 10-537. RISC Processor Circuit Pack Error Log Entries

Error Type	Aux Data	Associated Test	Alarm Level	On/Off Board	Test to Clear Value[1]
0[2]	0	Any	Any	Any	test processor a/b r 1
1(a)	Any	BOOTPROM Checksum Test (#80)	MAJOR	ON	test processor a/b r 5
513		Processor Write Buffer Test (#900)	MAJOR	ON	test processor a/b r 1
1025(b)	Any	Processor Cache Audit (#896)	MINOR	ON	test processor a/b r 2
1281	Any	Processor Cache Test(#895)	MAJOR	ON	test processor a/b r 1
1793(c)		Processor Bus Time-out Exception Test (#82)	MAJOR	ON	test processor a/b r 2
2049(d)(e)	Any	Processor Sanity Timer Test	MINOR	ON	test processor a/b l c
2305(d)(f)	Any	Address Matcher Test	none	ON	test processor a/b l c

1 The MTP Reset Test (#101) logs you off. The MTP Dual Port Ram Test (#104) can also log you off.

2 Run the Short Test Sequence first. If all tests pass, run the Long Test Sequence. Refer to the appropriate test description and follow the recommended procedures.

Notes:

a. The BOOTPROM Checksum Test (#80) failed. Refer to the FAIL condition of this test for further action.

b. A parity error was detected in the processor's data cache or instruction cache. Aux Data indicates the difference in the number of parity errors since the last report.

c. The Processor Bus Time-out Test (#82) failed. Refer to the FAIL condition of this test for further action.

d. Aux Data of 100 is an LMM initialization failure.

e. The Processor Sanity Timer Test failed during a reset level 4 or 5 initialization. reset system 4 at the customers convenience and if the alarm occurs again, replace the processor circuit pack. The system runs with this failure, but it is not protected if the system software has a sanity problem. The test processor a/b long clear command clears this alarm, but the sanity timer is only tested during initialization so the alarm occurs again and the system is not protected against insane software.

f. The Address Matcher Test failed during a reset level 4 or 5 initialization. This is not alarmed because the address matcher is only used for high level debugging. Replace the processor circuit pack if the Address Matcher is needed for troubleshooting.

System Technician-Demanded Tests: Descriptions and Error Codes

Always investigate tests in the order presented in the table below. By clearing error codes associated with the *Processor Bus Time-out Exception Test,* for example, you may also clear errors generated from other tests in the testing sequence.

Order of Investigation	Short Test Sequence	Long Test Sequence	D/ND[1]
Processor Cache Test (#895)		X	ND
Processor Cache Audit (#896)	X	X	ND
Processor Bus Time-out Exception Test (#82)	X	X	ND
Processor BOOTPROM Checksum Test (#80)	X	X	ND
Processor Write Buffer Test (#900)	X	X	ND
Memory Burst Read Test (#908)(a)	X	X	ND
Read All Memory Test (#85)(a)		X	ND
Memory Parity Error Detection Test (#87)(a)	X	X	ND
Flash Memory Checksum Test (#86)(a)		X	ND
Memory Functional Test (#332) (a) (b)		X	D
MTP Outpulse Relay Test (#102) (c)	X	X	ND
MTP External Modem Present Test (#230) (c)	X	X	ND
MTP Analog Loop Around Test (#103) (c)	X	X	ND
MTP Sanity Handshake Test (#106) (c)	X	X	ND
MTP SAT Loop Around Test (#228) (c)	X	X	ND
MTP Aux Loop Around Test (#229) (c)	X	X	ND
MTP Reset Test (#101) (c)		X	D
MTP Dual Port Ram Test (#104) (c)		X	D

1 D = Destructive; ND = Nondestructive

Notes:

a. Refer to “PR-MEM” for a description of these tests.

b. There are Functional Memory Test errors against the Processor circuit pack. This test is run only on the Standby SPE in a high or critical reliability system. On other systems or on the Active SPE, the test is run only via a reset system 4 command or a reset system 5 command.

c. Refer to “PR-MAINT” for a description of these tests.

Processor BOOTPROM Checksum Test (#80)

This test is a nondestructive test. This test computes the checksum of the Processor’s bootstrap BOOTPROM. A failure indicates the BOOTPROM is corrupt.

Table 10-538. Test #80 Processor BOOTPROM Checksum Test

Error Code	Test Result	Description/Recommendation
100	ABORT	The test did not complete within the allowable time period. 1. Retry the command.
1029 2014 2015 2016 2017 2018 2020 2022 2024 2025 2051	ABORT	Refer to STBY-SPE Maintenance documentation for a description of these error codes.
2500	ABORT	Internal system error 1. Retry the command.
	FAIL	The computed checksum did not match the BOOTPROM checksum. The system may not continue to operate correctly. The system may fail at some future date when the corrupted area the bootstrap BOOTPROM is accessed. 1. Replace the Processor circuit pack. **NOTE:** If you replace the Processor circuit pack, you need to obtain a new license file.
	PASS	The computed checksum matched the BOOTPROM checksum. This part of the Processor will continue to operate normally.

Processor Bus Time-out Exception Test (#82)

This test is a nondestructive test. The test is used to verify that the RISC Processor can intentionally cause a BUS TIMEOUT EXCEPTION (BTE) and then verifies if it vectors to the correct interrupt routine. This is basically a test of the internal operation of the RISC Processor chip and the bus time-out circuitry.

Table 10-539. Test #82 Processor Bus Time-out Exception Test

Error Code	Test Result	Description/Recommendation
100	ABORT	The test did not complete within the allowable time period. 1. Retry the command.
1029 2014 2015 2016 2017 2018 2020 2022 2024 2025 2051	ABORT	Refer to STBY-SPE for a description of these error codes.
2500	ABORT	Internal system error 1. Retry the command.
	FAIL	The interrupt was not detected or acted upon. 1. Repeat the command at 1-minute intervals a maximum of 5 times. 2. If the test continues to fail, the Processor circuit pack should be replaced. The replacement must have enough memory for this system. **NOTE:** If you replace the Processor circuit pack, you need to obtain a new license file. 3. If replacement of the Processor circuit pack still results in test failure, the following circuit packs should be replaced, one at a time in the order provided: TN765 Processor Interface, TN777B Network Control, TN778 Packet Control, and TN772 Duplication Interface circuit packs. The test should then be repeated.
	PASS	The interrupt was correctly detected. The RISC Processor is functioning correctly.

Processor Cache Test (#895)

This test is a nondestructive test. This test overwrites the contents in the Instruction and Data Caches, requiring them to be refilled during normal execution.

This test verifies that the Processor Instruction and Data Caches are functional. Some errors in the caches will simply reduce performance by forcing instructions or data to be read from memory more often than would normally be necessary. In any case, cache problems are serious and the Processor circuit pack must be replaced as soon as possible if they are detected.

Table 10-540. Test #895 Processor Cache Test

Error Code	Test Result	Description/Recommendation
100	ABORT	The test did not complete within the allowable time period. 1. Retry the command.
1029 2014 2015 2016 2017 2018 2020 2022 2024 2025 2051	ABORT	Refer to STBY-SPE Maintenance documentation for a description of these error codes.
2500	ABORT	Internal system error 1. Retry the command.
	FAIL	The Processor cache is not functioning correctly. 1. Replace the Processor circuit pack immediately. **NOTE:** If you replace the Processor circuit pack, you need to obtain a new license file.
	PASS	The cache portion of the Processor circuit pack is operating correctly.

Processor Cache Audit (#896)

This nondestructive audit checks the state of the Cache Parity bit maintained by the RISC CPU. If this bit is set, there may be problems with either the CPU, the Instruction, or Data Cache. An indication of bad cache parity won't itself mean that the system won't operate, but minor to severe performance degradation may be present. For example, a single bad bit in either cache could cause this bit to be set. If the faulty word is seldom accessed, the impact will be small. If the bit is accessed frequently, there could be serious problems with much, or all, of the cache (stuck data bit) with the only direct indication again being the cache parity error or cache test error.

Table 10-541. Test #896 Processor Cache Audit

Error Code	Test Result	Description/Recommendation
100	ABORT	The test did not complete within the allowable time period. 1. Retry the command.
1029 2014 2015 2016 2017 2018 2020 2022 2024 2025 2051	ABORT	Refer to STBY-SPE Maintenance documentation for a description of these error codes.
2500	ABORT	Internal system error 1. Retry the command.
	FAIL	The Cache Parity Error bit is set, there may be problems with either the CPU or the Instruction or Data Cache. 1. Retry the command. 2. If the test continues to fail, run test processor a|b long. 3. If the Processor Cache test (#895) or the Processor Cache Audit (#896) fails, replace the Processor circuit pack. **NOTE:** If you replace the Processor circuit pack, you need to obtain a new license file.
	PASS	The Processor has not detected any parity errors in the Instruction and Data Caches since the last time this audit was run.

Processor Write Buffer Test (#900)

This test is a nondestructive test. This test verifies that the Write Buffer operates properly on the Processor circuit pack. Failure of this test is serious. The Processor circuit pack must be replaced as soon as possible.

Table 10-542. Test #900 Processor Write Buffer Test

Error Code	Test Result	Description/Recommendation
100	ABORT	The test did not complete within the allowable time period. 1. Retry the command.
1029 2014 2015 2016 2017 2018 2020 2022 2024 2025 2051	ABORT	Refer to STBY-SPE Maintenance documentation for a description of these error codes.
2500	ABORT	Internal system error 1. Retry the command.
	FAIL	The Processor Write Buffer is not operating correctly. 1. Replace the Processor circuit pack immediately. **NOTE:** If you replace the Processor circuit pack, you need to obtain a new license file.
	PASS	The Write Buffer portion of the Processor circuit pack is operating correctly.

RANL-STA (Remote Analog Line (Station) Port)

MO Name (in Alarm Log)	Alarm Level	Initial Command to Run[1]	Full Name of MO
RANL-STA	MIN	test port UUCSSpp l	Remote Analog Line Port
RANL-STA	WRN	test port UUCSSpp sh	Remote Analog Line Port

1 UU is the universal cabinet number (1 for PPN, 2 or 3 for EPNs). C is the carrier designation (A, B, C, D, or E). SS is the number of the slot in which the circuit pack resides (01 to 21). pp is the two digit port number (01, 02, ...).

A per-port instance of this maintenance object (RANL-STA) is used to maintain the circuitry associated with a port which has been translated as analog station. The combo blade circuit board has the capability of having two instances of this type of maintenance object.

Failures of the neon message waiting lamp power and the common ringing application circuitry are reported as part of common port circuit pack errors; see errors 1281 and 1793 in the “XXX-BD (Common Port Circuit Pack)” section.

Ringing Caused by Maintenance Testing

Test #48 may cause some terminal equipment to ring briefly during daily maintenance. If this ringing disturbs the customer or the terminal equipment, disable it in the `Tests` field of the **change station** *extension* form. Be aware that this action will also disable Test 35 on that station.

Error Log Entries and Test to Clear Values

Table 10-543. Analog Line Error Log Entries

Error Type	Aux Data	Associated Test	Alarm Level	On/Off Board	Test to Clear Value
0[1]	0	Any	Any	Any	test port UUCSSpp sh r 1
1(a)	40960 40975 40977	none			
15(b)	Any	Audits and Updates Test (#36)			
18	0	busy-out station *extension*	WRN	ON	release station *extension*
257(c)	40973	none			
513(d)		Station Present Test (#48)	WRN	OFF	test port UUCSSpp sh r 2
769		Battery Feed Test (#35)	MIN/ WRN[2]	ON	test port UUCSSpp sh r 2
2817(e)		Hyperactive	MINOR	OFF	

1 Run the Short Test Sequence first. If all tests pass, run the Long Test Sequence. Refer to the appropriate test description and follow the recommended procedures.

2 Minor alarms on this MO may be downgraded to Warning alarms based on the values used in the **set options** command.

Notes:

a. Error Type: 1 - These are in-line errors and can only be resolved over time.

- 40960 indicates that too many simultaneous incoming ringing attempts were made on this board. Only 4 ports on a board may ring simultaneously. A 5th incoming call will cause an inline error from the board.
- 40975 indicates that the terminal equipment was on-hook when ring-tip was detected during ringing. This usually indicates a failure in the terminal equipment or the type of terminal has a low ringer impedance. Call the terminal equipment and verify that the terminal rings. If the terminal does not ring, then replace it. Otherwise, issue the **test port UUCSSpp** command, and follow the procedure for Test #48.

- 40977 indicates that terminal equipment was not connected when ringing was attempted. Run the short test via the **test port UUCSSpp** command, and follow the procedure for the results of Test #48.

b. Error Type: 15 - is a software audit error that does not indicate hardware malfunction. Run the Short Test Sequence and investigate associated errors.

c. Error Type: 257 - is an in-line error and can only be resolved over time. This error indicates that ringing voltage is absent. If only one analog circuit pack in the system has this problem, then replace the circuit pack. If only analog circuit packs on a particular carrier have this error, then the ringing generator may not be connected to this carrier. If analog circuit packs on many carriers have this error, then it is probably a problem with the ringing generator.

d. Error Type: 513 -Test #48 may cause some terminal equipment to ring briefly during daily maintenance. If this disturbs the customer or the terminal equipment, disable it by setting the `Tests` field on the **change station** extension form to `n`. On some software releases, this will also disable Tests #7 and 35.

e. **Error Type 2817** - indicates that the end-point caused a large number of control channel messages to be sent to the switch within a short period of time (50 or more CCMS uplinks within 10 seconds). The station will be taken out-of-service for 30 seconds due to the hyperactivity. This may be completely normal during heavy traffic periods.

System Technician-Demanded Tests: Descriptions and Error Codes

Always investigate tests in the order presented in the table below when inspecting errors in the system. By clearing error codes associated with the *Battery Feed Test,* for example, you may also clear errors generated from other tests in the testing sequence.

Order of Investigation	Short Test Sequence	Long Test Sequence	D/ ND[1]
Battery Feed Test (#35)	X	X	ND
Station Present Test (#48)	X	X	ND
Station Status and Translation Audits and Updates Test (#36)	X	X	ND

1 D = Destructive; ND = Nondestructive

Battery Feed Test (also called Port Diagnostic Test) (#35)

The battery feed chip provides power to the telephone equipment, signaling, rotary dial pulsing, transmission, and balance. This test checks the signaling and switchhook capabilities of the battery feed chip by terminating the port, applying battery and detecting the resulting current.

Table 10-544. TEST #35 Battery Feed Test

Error Code	Test Result	Description/Recommendation
	ABORT	Could not allocate the necessary system resources to run this test. 1. Retry the command at 1-minute intervals a maximum of 5 times.
1000	ABORT	System resources required to run this test are not available. The port may be busy with a valid call. This result is also reported for the system's Music-On-Hold port when it is off-hook, which it usually is. 1. Enter **display port UUCSSpp** to determine the station's extension. Enter **status station** *extension* to determine the service state of the port. If the port is in use, wait until the port is idle. 2. Retry the command at 1-minute intervals a maximum of 5 times.
1004	ABORT	The port was seized by a valid call during the test. The test has been aborted. Use the **display port UUCSSpp** command to determine the station extension. Use the **status station** command to determine the service state of the port. If the port is in use, wait until the port is idle. 1. Retry the command at 1-minute intervals a maximum of 5 times.
1005	ABORT	The test was aborted due to a configuration problem. This test may not be applicable, or it may be disruptive to terminal equipment other than a voice terminal (for example, the modem pool member or Music On Hold).

Continued on next page

Table 10-544. TEST #35 Battery Feed Test — *Continued*

Error Code	Test Result	Description/Recommendation
1018	ABORT	The test has been disabled via administration. The default for the `Test` field on the **Station** form is `y`. 1. Determine why this field has been set to `n` on this station (this may be due to the ringing application test 48, which can be customer or terminal disturbing). 2. To enable the test for the particular analog station being tested, enter **change station** *extension* and set the `Test?` field on the **Station** form to `y`.
1392	ABORT	This port is currently a TTI port and the test will not execute on it. 1. Verify that the port is a TTI port using either the **display port** command (the display shows that the port is a TTI port) or the **list config** command (the display shows a `t` for the port). 2. If the port is *not* a TTI port, escalate the problem. If both commands indicate that the port is a TTI port, the abort is correct for the test, and no action is necessary.
2000	ABORT	Response to the test request was not received within the allowable time period. 1. Retry the command at 1-minute intervals a maximum of 5 times.

Continued on next page

Table 10-544. TEST #35 Battery Feed Test — *Continued*

Error Code	Test Result	Description/Recommendation
2100	ABORT	Could not allocate the necessary system resources to run this test. 1. Retry the command at 1-minute intervals a maximum of 5 times.
	FAIL	The port's battery feed chip is unable to supply sufficient power to the terminal equipment. This could be a marginal test, and the terminal equipment may be operating satisfactorily. 1. Retry the command at 1-minute intervals a maximum of 5 times. 2. If the test continues to fail, determine whether the customer is experiencing problems on this line. Replace the circuit pack only if the customer is experiencing problems.
	PASS	The port's battery feed chip is able to provide power to the station equipment to detect on-/off-hook, but may not be able to supply power for touch-tones. If touch-tones are inoperative on this station, then replace the circuit pack because this port is inoperative. User-reported troubles on this port should be investigated by using other port tests, by examining station wiring, or by examining the station.

Station Status and Translation Audits and Updates Test (#36)

This test updates the analog port's message lamp state (if it has one) and translations with information in the software.

Table 10-545. TEST #36 Station Status and Translation Audits and Updates

Error Code	Test Result	Description/Recommendation
	ABORT	Could not allocate the necessary system resources to run this test. 1. Retry the command at 1-minute intervals a maximum of 5 times.
1004	ABORT	The port was seized by a valid call during the test, and the test was aborted. Use the **display port UUCSSpp** command to determine the station extension. Use the **status station** command to determine the service state of the port. If the port is in use, wait until port is idle. 1. Retry the command at 1-minute intervals a maximum of 5 times.
1005	ABORT	The test was aborted due to a configuration problem. This test may not be applicable, or it may be disruptive to terminal equipment other than a voice terminal (for example, the modem pool member or Music On Hold).
2000	ABORT	Response to the test request was not received within the allowable time period.
2100	ABORT	Could not allocate the necessary system resources to run this test. 1. Retry the command at 1-minute intervals a maximum of 5 times.
1	FAIL	This does not indicate a hardware problem. The switchhook audit failed. The other updates were not performed because of this failure. This may occur when the audit is performed at the same time the terminal equipment goes off-hook. Use the **status station** command to determine when the port is available. 1. Retry the command at 1-minute intervals a maximum of 5 times.

Continued on next page

Table 10-545. TEST #36 Station Status and Translation Audits and Updates — *Continued*

Error Code	Test Result	Description/Recommendation
5	FAIL	This may be an internal software error. The message waiting lamp update failed. The translation and ringer updates were not performed because of this failure. 1. Retry the command at 1-minute intervals a maximum of 5 times.
7	FAIL	The translation update failed. There may be an internal software error. The ringer update was not performed because of this failure. 1. Retry the command at 1-minute intervals a maximum of 5 times.
8	FAIL	This does not indicate a hardware problem. There may be an internal software error. The ringer update failed. 1. Retry the command at 1-minute intervals a maximum of 5 times.
	PASS	The software and the port processor have the same status. User-reported troubles on this port should be investigated by using other port tests, by examining station wiring, or by examining the station.

Station Present Test (also called Ringing Application Test) (#48)

This test applies momentary ringing voltage to the terminal equipment and monitors resulting current flow to determine whether the terminal equipment is connected to the port. The test may cause some terminal equipment to ring briefly during daily maintenance. If this ringing disturbs the customer or the terminal equipment, disable it via the `Tests` field on the **change station** form. However, on some software releases, Test #35 is disabled.

Table 10-546. TEST #48 Station Present Test

Error Code	Test Result	Description/Recommendation
	ABORT	Could not allocate the necessary system resources to run this test. 1. Retry the command at 1-minute intervals a maximum of 5 times.
1000	ABORT	System resources required to run this test are not available. The port may be busy with a valid call. Use the **display port UUCSSpp** command to determine the station extension. Use the **status station** command to determine the service state of the port. If the service state indicates that the port is in use. Wait until the port is idle. 1. Retry the command at 1-minute intervals a maximum of 5 times.
1004	ABORT	The port was seized by a valid call during the test, and the test was aborted. Use the **display port UUCSSpp** command to determine the station extension. Use the **status station** command to determine the service state of the port. If the service state indicates that the port is in use. Wait until the port is idle. 1. Retry the command at 1-minute intervals a maximum of 5 times.
1005	ABORT	The test was aborted due to a configuration problem. This test may not be applicable, or it may be disruptive to terminal equipment other than a voice terminal (for example, the modem pool member or Music On Hold).

Continued on next page

Table 10-546. TEST #48 Station Present Test — *Continued*

Error Code	Test Result	Description/Recommendation
1008	ABORT	Could not allocate a ringing circuit. Either all the ringing circuits are in use or the ringing generator is defective or it is not wired correctly. 1. Retry the command at 1-minute intervals a maximum of 5 times. 2. If the test continues to abort, look for RING-GEN errors in the Error Log. If an ABORT 1008 occurs for this test on other circuit packs as well, then the ringing generator may be defective or is not wired correctly (see errors for RING-GEN). If it does not occur on other ports, then all four ring phases are in use.
1018	ABORT	The test has been disabled by administration. The default for the `Test` field on the **Station** form is `y`. Determine why this field has been set to `n` on this station (this may be due to the brief ringing disturbance that this test may cause). 1. To enable the test for the particular analog station being tested, enter **change station** *extension* and set the `Test?` field on the **Station** form to `y`.

Continued on next page

Table 10-546. TEST #48 Station Present Test — *Continued*

Error Code	Test Result	Description/Recommendation
2000	ABORT	Response to the test request was not received within the allowable time period. 1. Retry the command at 1-minute intervals a maximum of 5 times.
2100	ABORT	Could not allocate necessary system resources to run this test. 1. Retry the command at 1-minute intervals a maximum of 5 times.
	FAIL	The terminal equipment is not connected to the circuit pack. Some terminal equipment, such as modems, may fail even when connected properly. 1. Remotely test the equipment. 2. If the test fails again, look for RING-GEN errors in the error log. If present, refer to “RING-GEN”. 3. Check all of the wiring between the station equipment and the switch. Then, run the test again. 4. If the test still fails, the set may be defective. Check the set and replace it, if necessary. 5. Some terminal equipment could fail even when it is connected properly. If this is the case, disable the test using the **change station** *extension* command (enter `n` into the `Test` field). Note that this action also disables Test #35 on this port.
	PASS	The station is connected properly. This test may also pass if no terminal equipment is connected and the terminal is located very far from the switch. User-reported troubles on this port should be investigated by using other port tests, by examining station wiring, or by examining the station.

RDIG-STA (Remote Digital Station)

MO Name (in Alarm Log)	Alarm Level	Initial Command to Run[1]	Full Name of MO
RDIG-STA	MINOR	test station *UUCSSpp* l	Remote Digital Station
RDIG-STA	WARNING	test station *UUCSSpp* sh	Remote Digital Station

1 UU is the universal cabinet number (1 for PPN, 2 or 3 for EPNs). C is the carrier designation (A, B, C, D, or E). SS is the number of the slot in which the circuit pack resides (01 to 21). pp is the two digit port number (01, 02, ...).

A per-port instance of this maintenance object (RDIG-STA) is used to maintain the circuitry associated with a port which has been translated as a digital station (or DCP Console). The combo blade circuit board has the capability of having 24 instances of this type of maintenance object.

Remote Digital Station maintenance software provides maintenance for a port administered as a digital station on the circuit pack. This strategy covers the in-line errors log, initialization tests, periodic tests, craft-demanded tests, and alarm resolution and escalation. Each port, translated as a digital station on a digital line board, is running as a separate maintenance object (RDIG-STA) of this type. Fault conditions discovered on one maintenance object may or may not indicate faults on other maintenance objects of the same type.

Maintenance testing for the port circuitry on the combo blade circuit packs is handled by on-board firmware and SPE (switch) controlled tests. Maintenance software queries the firmware for error and alarm information, status, and test results. Firmware automatically reports in-line error conditions, which results in SPE-controlled testing.

There are instances where the service state of a station is mentioned. The different service states that apply to a remote digital line station are as follows:

Table 10-547. Remote Digital Line Station Service States

Out-of-Service	The port, and thus the station, have been removed from service. Busyout puts the port in the out-of-service state.
Ready-for-Service	The port on the circuit pack has been put into service, but the voice terminal has not yet established signaling communications with the port.
In-Service	The voice terminal has established signaling communications with the port, and the system is ready to process calls to and from that station. A terminal in the ready-for-service state will progress to the in-service state if it is functioning normally. It can also be forced into the in-service state by going off-hook.

Downloading of Terminal Parameters

Programmable Terminals

The following information describes how maintenance software interacts with terminal parameter downloading.

Terminal Types:

a. 84xx multibutton digital voice terminals (8403D01A, 8410B, 8410D02A, 8434D01A) with optional expansion module.

b. 603A1 and 603D1 Callmaster terminals for telemarketing applications.

c. 302B1 and 302C1 attendant console.

Downloadable Terminal Parameters

The following parameters are downloaded to programmable terminals:

Table 10-548. Parameters Downloadable to Programmable Terminals

Parameter	Scope	Terminal
International Flags (A-law/mu-law, Display Mode, DLI Voltage level)	System level	84xx, 603x, 302B1
Primary Levels (Transmission & Sidetone)	System level	84xx, 603x, 302B1
Adjunct Levels (Transmission & Sidetone)	System level	84xx
Handset Expander Option	System level	84xx
Administrable Options (Speakerphone & Mute Button)	Per-terminal	84xx
Administrable Softkeys	Per-terminal, System level	8410D, 8434D

Nonvolatile Memory

Nonvolatile memory stores downloadable parameters in programmable terminals. Once the terminal is downloaded, it is not be necessary to download it again, even if power is removed from the terminal. If nonvolatile memory fails with power still present, the terminal reverts to its default factory settings except for its A-law/mu-law companding settings which are stored in RAM. If power is removed after the nonvolatile memory fails, the terminal reverts to its factory default settings.

NOTE:
The mu-law companding mode is assigned as a default setting at the factory. For the United States, a programmable terminal can place calls even though it has not been downloaded from the system.

Download Actions

There are several different scenarios which causes a terminal to be downloaded. These can occur as part of background maintenance activity or on demand from the System Access Terminal (SAT) or from a station.

For the background actions described below, the terminal downloads automatically if a download retry flag for the terminal is set in software. This flag is set at the time translation is loaded at boot time, when the translation that affects the parameters of a terminal is changed as part of system administration actions, or when a port is inserted in software as a result of board insertion or translation change.

Automatic Download Actions

1. System Reboot/Restart

   A global download action is initiated when periodic maintenance tests begin after a system reboot/restart, regardless of whether the parameters have been downloaded previously.

2. Periodic Tests

   If the download flag is still set when periodic tests are run on a terminal, a download action will occur. This action is required in case a terminal could not be downloaded previously, because:

   - It was off-hook at the time the system first booted, or
   - The terminal was off-hook at the time the translation associated with downloadable parameters was changed.

   NOTE:
   It may take more than an hour for periodic tests to reach the terminal that needs to be downloaded.

3. Terminal Administration

   A downloadable terminal is *automatically* downloaded when translation changes associated with downloadable parameters are made as part of system administration. As shown in the previous table, these changes can be for a specified terminal or may be system-wide. If the change is for a system-level parameter, a background global update request must be submitted to download all programmable terminals.

   NOTE:
   This global update may take more than an hour for a system with several thousand programmable terminals.

4. Port Insertion

   Whenever maintenance software initiates a request to place a port into service, a terminal download action is begun on that terminal, if that terminal is programmable. This port insertion action occurs under the following circumstances:

   - A digital line circuit pack that is physically inserted into the system and has ports currently administered for programmable terminals.
   - A station port is added to the system by an **add station** or **change station** command.
   - A TTI port is activated.

5. Audits

   As part of periodic maintenance, the Hardware Status Audit Test queries programmable terminals to determine which levels and/or options are being used. If the reported values are not equal to the administered values, the system will initiate a terminal download action; however, this audit does NOT check the parameters used for softkeys.

6. Activation of TTI

   A terminal is downloaded automatically when it is activated using the Terminal Translation Initialization (TTI) feature. Therefore, no special user actions are required for TTI.

   NOTE:
   Plugging the station cord into a terminal does not automatically cause the terminal to be downloaded. If this terminal has factory defaults or if the terminal has been previously downloaded with parameters different than those desired, use one of the demand download actions described below to download the terminal.

Demand Download Actions

1. Busyout/Release Command

   A maintenance demand busyout/release request for a station will cause the terminal to be downloaded regardless of its previous download status.

2. Feature Access Code

   A Refresh Terminal Parameters Feature Access Code can be used to request a terminal download action. When this code is followed by a “#”, the programmable parameters for the current terminal are downloaded when the terminal goes on-hook. When this code is followed by an extension, the programmable parameters for the specified station are downloaded.

   This Refresh Terminal Parameters Feature Access Code is assigned on the second page of the **feature-access-codes** screen.

   A confirmation is returned if the download request is accepted. A busy tone is returned if the request is made from a different station when the target station is off-hook.

   As a result of an entry of a Refresh Terminal Parameters Facility Access Code, the first three green call appearance LEDs on the 84xx 603x terminal are turned on for three seconds, if the station was successfully downloaded. This is not true for the 302B1 terminal.

   There is no visible display on a station for the other background or demand download actions. As described below, the **status station** and **status attendant** screens can be used to check the download status of a specified terminal.

Status of Parameter Downloads

The **status station** and **status attendant** screens display the current download status of individual 84xx, 603, and 301B1 terminals in the `Download Status` field. The possible download states are:

Status	Terminal Download State
Complete	The terminal successfully downloaded sometime in the past.
Pending	The system is waiting to download the terminal. This may require the execution of a background periodic test which could take more than an hour. A demand download as described above may also be used to initiate an immediate download.
Not Applicable	Not a programmable terminal.

Possible reasons for no terminal download include:

- Terminal is off-hook
- Terminal detected a bad checksum
- Terminal detected a bad or missing EEPROM (refer to hardware error log)
- Terminal is busy programming data from a previous PROGRAM message
- Terminal is in the Programming Disabled state
- Terminal is in the Local Program Options Mode
- Terminal is disconnected or out of service (use **status station** command)

Table 10-549. Digital Line Error Log Entries

Error Type	Aux Data	Associated Test	Alarm Level	On/Off Board	Test to Clear Value
0[1]	0	Any	Any	Any	test port *UUCSSpp* sh r 1
1 (a)	1 to 20, 40987	None	WARNING	OFF	
18 (b)	0	busyout port *UUCSSpp*	WARNING	OFF	re port *UUCSSpp*
257 (c)	40971	None			
513 (d)	0	Station (Digital) Audits Test (#17)	WARNING	OFF	test port *UUCSSpp* sh r 6
767 (e)	40964	None	WARNING	OFF	
769 (f)	40963 40988	None	WARNING	OFF	
1025 (g)		None	WARNING	OFF	
1281	Any	Station (Digital) Audits Test (#17)	WARNING	OFF	test port *UUCSSpp* sh r 4

Continued on next page

Table 10-549. Digital Line Error Log Entries — *Continued*

Error Type	Aux Data	Associated Test	Alarm Level	On/Off Board	Test to Clear Value
1537 (h)	40968	None	WARNING	OFF	
2304 (i)		None			
2305 (j)	32770, 40967	None			
2817 (k)		Hyperactive	MINOR	OFF	
3840 (l)	40965, 40989	None			
3841 (m)	41029	None			

1 Run the Short Test Sequence first. If all tests pass, run the Long Test Sequence. Refer to the appropriate test description and follow the recommended procedures.

Notes:

a. Error type - 1; with Aux Data of 40987 — could be caused by a noisy port or link. This is an off-board problem detected by the port circuit. Check for defective wiring, a defective voice terminal, or move the voice terminal closer to the switch (in terms of feet of wire from the jack to the switch). If the problem persists, replace the circuit pack. Once the problem has been resolved, the alarm disappears after a predetermined amount of time.

   Error Type - 1; with Aux Data of 1 to 20 — occurs when at least 15 off-board problems have been detected with the link to the terminal. When an error with the link is detected, an on-board counter is incremented.

   The user could experience a noisy port or link. This is an off-board problem detected by the port circuit. Check for defective wiring, a defective voice terminal, or move the voice terminal closer to the switch (in terms of feet of wire from the jack to the switch). If the problem persists, replace the circuit pack. Once the problem has been resolved, the alarm disappears after a predetermined amount of time.

b. Error Type - 18 — is logged when the port in question is busied out by maintenance personnel. Make sure the port is released from busyout by the **release port UUCSS pp/PCSSpp** command.

c. Error Type - 257 — indicates problems transmitting to the voice terminal, which can be caused by defective wiring. Defective wiring can cause varying degrees of problems on different types of sets.

d. Error Type - 513 — is the result of an ID Request failure to respond to the digital endpoint audit.

e. Error Type - 767 — an in-line event produces this error type when a favorable response is received from running the Digital Line Electronic Power Feed Test (#11). No craft action is necessary. This alarm will be resolved with the passing of time.

f. Error Type - 769; with Aux Data 40963 — is the result of an unfavorable response to the Electronic Power Feed/ Positive Temperature Coefficient Test (#11).

   Error Type - 769; with Aux Data 40988 — indicates that the EPF/PTC circuit has been turned off due to an overcurrent condition.

   Once the problem has been resolved, it may take up to one hour for the alarm to clear due to the “leaky bucket” strategy. If the problem cannot be resolved by one of the steps above, then replace the circuit pack.

g. Error Type - 1025 — is a problem with the voice terminal EEPROM. When the voice terminal is repaired the alarm will be resolved with the passing of time.

h. Error Type - 1537 — An in-line maintenance error has generated an off-board warning due to a problem with the link to the voice terminal. This can be ignored if no user complaints are received. Otherwise, make sure the voice terminal is connected, check for defective wiring, check for a defective voice terminal, and move the voice terminal to a jack that is closer to the switch (in terms of feet of wiring between the jack and the switch). If the problem persists, replace the circuit pack. Once the problem has been resolved, the alarm disappears after a predetermined amount of time.

i. Error Type - 2304 — Internal system error. No action is necessary.

j. Error Type - 2305; with aux data 32770 — indicates that the station went off-hook while it was in the ready-for-service state. Use the **status station** command to determine the state of the station. The off-hook should have moved the station to ready-for-service. No craft action is necessary.

   Error Type - 2305; with aux data 40967 — Indicates that an in-line maintenance error has generated an off-board warning due to a problem with the link to the voice terminal. This can be ignored if no user complaints are received. Otherwise, make sure the voice terminal is connected, check for defective wiring, check for a defective voice terminal, and move the voice terminal to a jack that is closer to the switch (in terms of feet of wiring between the jack and the switch). If the problem persists, replace the circuit pack. Once the problem has been resolved, the alarm disappears after a predetermined amount of time

k. Error Type - 2817 — indicates that the end-point caused a large number of control channel messages to be sent to the switch within a short period of time (50 or more CCMS uplinks within 10 seconds). The station will be taken out-of-service for 30 seconds due to the hyperactivity. This may be completely normal during heavy traffic periods.

l. Error Type - 3840; with aux data 40965 — indicates that no terminal is connected to the COMBO board. No maintenance action is required. This is also the code that is generated when the link between the circuit pack and the voice terminal is successfully reset. No craft action is necessary.

   Error Type - 3840; with aux data 40989 — indicates an uplink message has been logged indicating that the Electric Power Feed (EPF) is on with no load on it. No action is necessary. No craft action is necessary.

m. Error Type - 3841 — The circuit pack's message buffer is full. This may be caused by having many display phones with heavy traffic connected to the circuit pack. No action is necessary.

System Technician-Demanded Tests: Descriptions and Error Codes

Always investigate tests in the order presented in the table below. By clearing error codes associated with the *Digital Line Electronic Power Feed Test,* for example, you may also clear errors generated from other tests in the testing sequence.

Order of Investigation	Short Test Sequence	Long Test Sequence	D/ ND[1]
Digital Line Electronic Power Feed Test (#11)		X	ND
DIG-LINE Station Lamp Updates Test (#16)	X	X	ND
Station (Digital) Audits Test (#17)	X	X	ND

1 D = Destructive; ND = Nondestructive

Digital Line Electronic Power Feed/Positive Temperature Coefficient/PPF Test(#11)

This is an Electronic Power Feed (EPF) restoration test. In this test, the processor requests that the EPF be turned on for a given port, and an attempt is made to turn on the power supply to the station. If no current is drawn, the station is probably not connected. If an overcurrent condition is sensed, there may be a short in the loop. A message is returned reporting that either the EPF was successfully turned on, or that an overcurrent condition was sensed. This test is repeated again 5 seconds later.

Table 10-550. TEST #11 Digital Line Electronic Power Feed Test

Error Code	Test Result	Description/Recommendation
	ABORT	Internal system error. 1. Retry the command at 1-minute intervals a maximum of 5 times.
1000	ABORT	System resources required to run this test are not available. The port may be busy with a valid call. Enter **display port UUCSSpp** to determine the station extension or attendant number of the port. Use **status station** or **status attendant** to determine the service state of the port. If the port is in use, wait until the port is idle before testing. Attendants are always in use (off-hook) if the handset is plugged in and the port is not busied out. 1. If the port status is idle, then retry the command at 1-minute intervals a maximum of 5 times.
	FAIL	Internal system error 1. Retry the command at 1-minute intervals a maximum of 5 times.
	PASS	Electronic Power Feed Test passed. The message to turn on the power to the station was successfully sent to the port. 1. Although this test will never actually return a FAIL result except for the Internal system error described above, it will log an error indicating the real results of the test. Check the Error Log for any entries with Error Types 767 or 769 after the test completes. 2. If Error Type 767 appears in the Error Log, the test sensed no problems with the power to the station. To verify that the station is powered up correctly, run a self-test on the station and check that all the feature buttons are operating. 3. If Error Type 769 appears in the Error Log, this indicates some problem with the power to the station. Check for a short in the wiring, a damaged jack, a defective voice terminal, or an incorrect type of terminal.

DIG-LINE Station Lamp Updates Test (#16)

This test lights all lamps on the terminal as specified. The lamp updates will run only if the station is in-service. The status of the station is checked and the lamp updates are blocked from taking place, if the station is not in the in-service state. This test does not affect the status of the Message Waiting lamp.

Table 10-551. TEST #16 DIG-LINE Station Lamp Updates Test

Error Code	Test Result	Description/Recommendation
	ABORT	Internal system error 1. Retry the command at 1-minute intervals a maximum of 5 times.
1	ABORT	This port may have been busied out by system technician. 1. Look in the Error Log for Error Type 18 (port busied out) for this port. If this error type is present, then release the port using the **release station** *extension* command and run the test again. 2. Make sure that the terminal is connected. 3. Retry the command at 1-minute intervals a maximum of 5 times.
3	ABORT	Station may be in ready-for-service or out-of-service state. 1. Use the **status station** command to verify the state of the station. 2. Make sure the terminal is connected. 3. Retry the command at 1-minute intervals a maximum of 5 times.
1000	ABORT	System resources required to run this test are not available. The port may be busy with a valid call. Use **display port UUCSSpp** to determine the station extension or attendant number of the port. Use **status station** or **status attendant** to determine the service state of the port. If the port is in use, wait until the port is idle before testing. Attendants are always in use (off-hook) if the handset is plugged in and the port is not busied out. 1. If the port status is idle, then retry the command at 1-minute intervals a maximum of 5 times.

Continued on next page

Table 10-551. TEST #16 DIG-LINE Station Lamp Updates Test — *Continued*

Error Code	Test Result	Description/Recommendation
1392	ABORT	The port is currently a TTI port and the test will not execute on it. 1. Verify that the port is a TTI port using either the **display port** command (the display shows that the port is a TTI port) or the **list config** command (the display shows a `t` for the port). 2. If either **list config** or **display port** indicates that the port is *not* a TTI port, escalate the problem. If both commands indicate that the port is a TTI port, the abort is correct, and no action is necessary.
	FAIL	Internal system error 1. Retry the command at 1-minute intervals a maximum of 5 times.
	PASS	The message to light all of the station lamps was sent successfully to the port. 1. Observe the station lamps being lit when running the test. If all lamps do not light, the other Digital Line test results may indicate related problems that do not allow the lamps to light. 2. Investigate by using other Digital Line port tests, and by examining the station, wiring, and connections.

Digital Station Audits Test (#17)

This is a series of six tests that are classified as audits. The SPE sends messages to the on-board microprocessor to perform the tests. These audits run only if the station is in-service.

- Switchhook Inquiry Test — This is an update of the SPE records according to the circuit pack's records. This inquiry is sent all the way to the voice terminal.
- Bad Scan Inquiry Test — A message is sent uplink containing a count that is generated based on certain events relating to the link conditions. This can be an indication of communications problems between the Processor and Digital Port circuit pack.
- EPF/PTC Inquiry Test — The status of the Electronic Power Feed (EPF) is sent uplink. Possible conditions are: EPF-on-ok, EPF-off.

- ID Request Test — A request is made to the station for its status. The station sends its configuration information and health information back. This information is checked and a pass/fail result is provided.
- Ringer Update — This updates the digital telephone ringer state according to the processor records.
- DTMF Administration Update — This is a message to the digital station to refresh the default value that causes the station to send touch- tones only in the primary information channel. This value is set initially when the station is put in-service and every time the station's state changes from other states to in-service.

Table 10-552. TEST #17 Station (Digital) Audits Test

Error Code	Test Result	Description/Recommendation
1	ABORT	Switchhook audit timed out. 1. Make sure voice terminal is connected and repeat test. 2. If test fails, replace voice terminal and repeat test.
2	ABORT	ID request fails, health bit returned from voice terminal is bad. 1. Make sure voice terminal is connected and repeat test. 2. If test fails, replace voice terminal and repeat test.
3	ABORT	The EPF has detected an overcurrent condition. 1. Use **test UUCSSpp long**. If Test #11 passes, then the EPF condition was cleared. Rerun the Short Test Sequence. If Test #11 does not pass, follow the repair procedures described for Test #11. 2. Look for Error Type 769 logged against RDIG-STA and follow the procedures in the associated footnote. If any additional problems are found, rerun the test.
4	ABORT	Internal system error 1. Resolve any outstanding circuit pack maintenance problems. 2. Retry the command at 1-minute intervals a maximum of 5 times.
5	ABORT	Ringer update aborted due to station being in ready-for-service or out-of-service state.

Continued on next page

Table 10-552. TEST #17 Station (Digital) Audits Test — *Continued*

Error Code	Test Result	Description/Recommendation
6	ABORT	This port may have been busied out by a system technician. 1. Look in the Error Log for Error Type 18 (port busied out) for this port. If this error is present, release the port using the **release station** command. 2. Make sure that the terminal is connected. 3. Retry the command at 1-minute intervals a maximum of 5 times.
1000	ABORT	System resources required for this test are not available. 1. Retry the command at 1-minute intervals a maximum of 5 times.
1392	ABORT	This port is currently a TTI port and the test will not execute on it. 1. Verify that the port is a TTI port using either the **display port** command (the display shows that the port is a TTI port) or the **list config** command (the display shows a `t` for the port). 2. If either **list config** or **display port** indicate that the port is *not* a TTI port, escalate the problem. If both commands indicate that the port is a TTI port, the abort is correct, and no action is necessary.
2000	ABORT	Response to the test was not received in the allowable time period.
	FAIL	Internal system error 1. Retry the command at 1-minute intervals a maximum of 5 times.
	PASS	Station Audits passed. This Digital Port circuit pack is functioning properly. 1. If complaints persist, investigate by using other port tests, and by examining the station, wiring, and connections.

REM-OFF (Remote Office)

MO Name (in Alarm Log)	Alarm Level	Initial Command to Run[1]	Full Name of MO
REM-OFF	MIN	ping node-name/ip-address	Remote Office
REM-OFF	WRN	ping node-name/ip-address	Remote Office

1 UU is the universal cabinet number (1 for PPN, 2 or 3 for EPNs). C is the carrier designation (A, B, C, D, or E). SS is the number of the slot in which the circuit pack resides (01 to 21).

An instance of this maintenance object (REM-OFF) is associated with every Remote Office box that is administered on the switch. This maintenance object monitors keep alive and periodic PING test failures, and if these errors occur, they are logged against this maintenance object.

Error Log Entries and Test to Clear Values

Table 10-553. Analog Line Error Log Entries

Error Type	Aux Data	Associated Test	Alarm Level	On/Off Board	Test to Clear Value
1(a)		A ping test to an endpoint has failed	MINOR	OFF	ping node-name/ip-address
257(b)	See note (b)	A keep alive update request has exceeded the time limit for an endpoint	Log only	OFF	ping node-name/ip-address

Notes:

a. Error Type - 1 — indicates that a PING Test to the Remote Office has failed, and a MINOR alarm has been raised.

The PING test verifies that a path to a registered Remote Office is good. When this error is logged, as many as 26 endpoints (associated with that Remote Office) and several H.323 signaling groups could be out of service.

b. Error Type - 257 — A Keep-Alive Timer is set for every registered endpoint on the Remote Office. The switch expects keep-alive update information within a certain time period, and if that time limit is exceeded, an error is logged. The error is a log-only error, because there is no way to determine which entity has failed.

   However, the aux data associated with this error indicates whether the endpoint that failed to respond was a DCP, Analog, or Signaling Group type.

   - Aux data with a value of (1096) = Analog Line
   - Aux data with a value of (1095) = DCP Line
   - Aux data with a value of (6179) = H.323 Signaling Group

System Technician-Demanded Tests: Descriptions and Error Codes

There are no demand tests for this maintenance object, although the Remote Office can be pinged using the **ping ip/node** command.

RING-GEN (Analog Ring Generator)

MO Name (in Alarm Log)	Alarm Level	Initial Command to Run[1]	Full Name of MO
RING-GEN	MAJOR	test environment P	Analog Ring Generator

1 Where P is an appropriate port network number determined via the Port field from the Alarm or Error Log.

All analog phones in DEFINITY Generic 1 cabinets must be provided with a ringing voltage. The RING-GEN (Analog Ring Generator) MO is the device that provides the ringing voltage for analog phones in a multicarrier or single carrier cabinet system. In a single carrier cabinet system, the Analog Ring Generator resides in the Power Distribution Unit (PDU), typically:

- WP91153 (single carrier cabinets)
  - Figure 10-86 on page 10-1460 shows the position of the WP-91153 PDU and illustrates that fuse F9 is used for the Analog Ring Generator.
  - Figure 10-87 on page 10-1461 shows the position of the fuses on the WP-91153 PDU and describes how to replace a fuse.
- 1217A (single carrier cabinets) has a ring generator slide switch on the bottom of the unit:
  - 20 Hz. for North American and international applications
  - 25 Hz. for international applications

Each carrier contains its own Analog Ring Generator.

A ringing voltage generator failure means that no ringing occurs on analog phones; however, digital and hybrid phones do ring. The ringing voltage is monitored by the Tone-Clock (active, if duplicated) circuit pack. In an EPN made up of single-carrier cabinets, the Tone-Clock monitors only the ringing voltage in the carrier containing the tone clock.

NOTE:
If the TN2182 Tone-Clock is installed in the Processor Interface slot, the ringing voltage is not monitored.

NOTE:
The TN2036 Voltage Range circuit pack provides easy access for testing the various voltages on the backplane pins.

See "Replacing power supplies and fans" in Chapter 5, "Routine Maintenance Procedures" for information about troubleshooting and replacing power units.

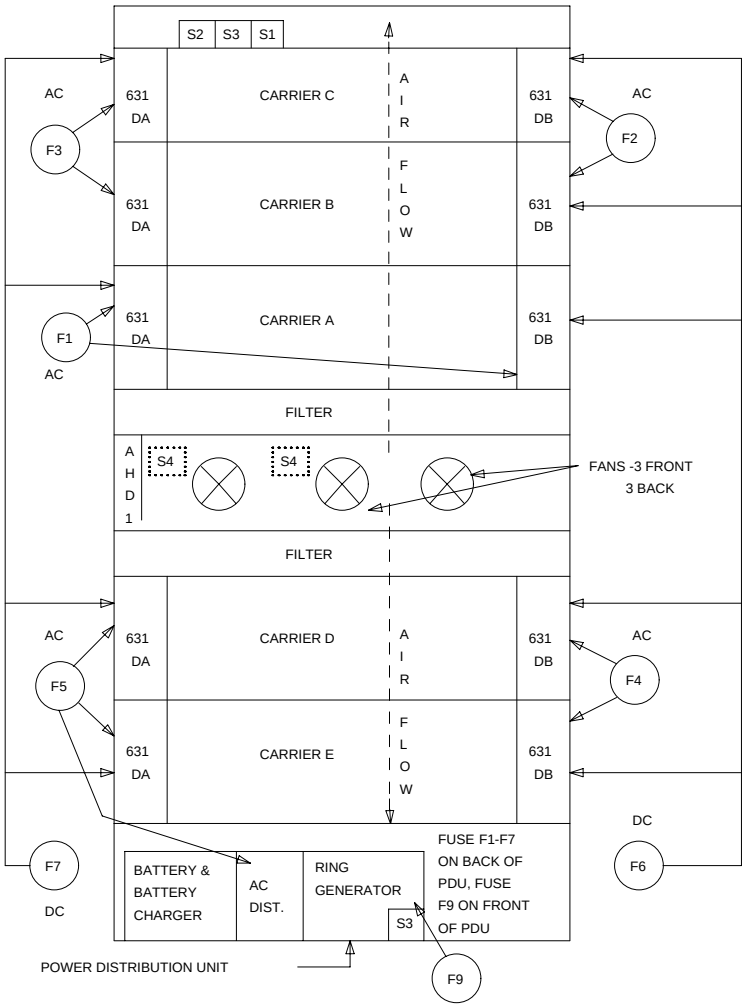

Figure 10-86. Multicarrier Cabinet Environment Components

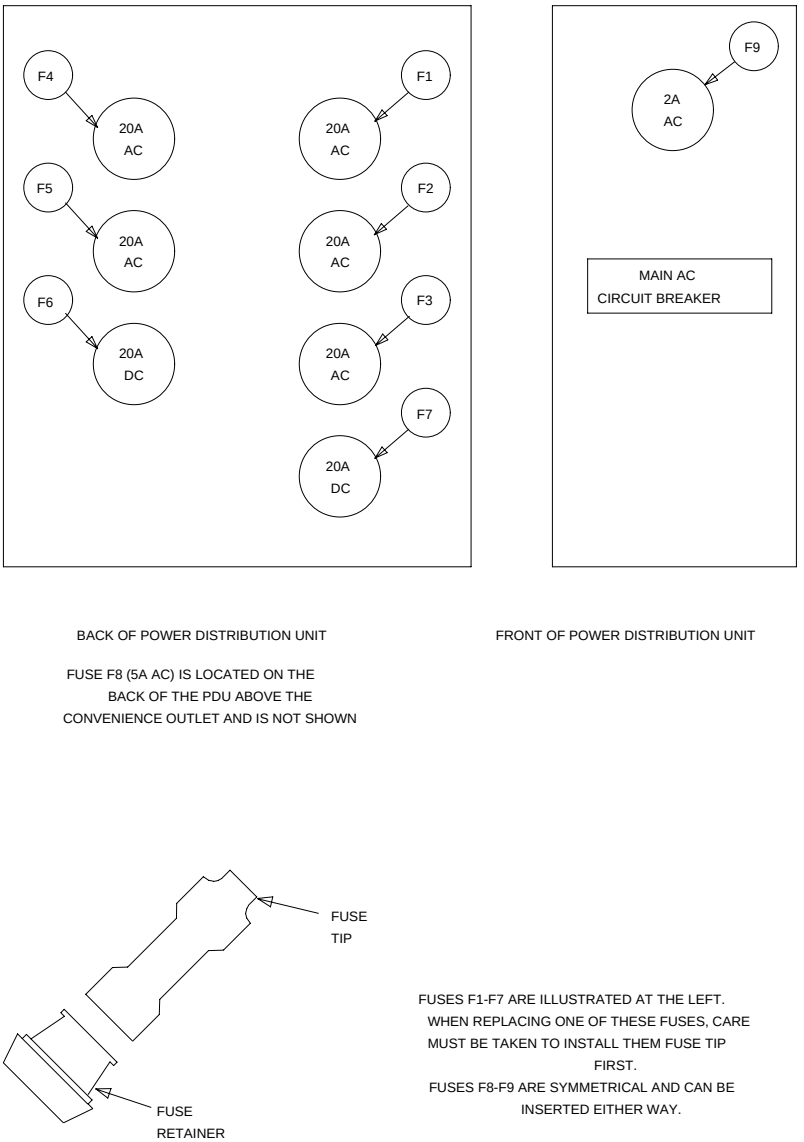

Figure 10-87. Multicarrier Cabinet Fuse Location and Replacement

Hardware Error Log Entries and Test to Clear Values

Analog Ring Generator Error Log Entries

Error Type	Aux Data	Associated Test	Alarm Level	On/ Off Board	Test to Clear Value
0[1]	0	Any	Any	Any	test environment UU
1		Analog Ring Generator Query Test (#118)	MAJOR	ON	test environment UU r 3

1 Run the Short Test Sequence first. If all tests pass, run the Long Test Sequence. Refer to the appropriate test description and follow the recommended procedures.

System Technician-Demanded Tests: Descriptions and Error Codes

Always investigate tests in the order presented in the following tables when inspecting errors in the system. By clearing error codes associated with the Analog Ring Generator Initialization Test, for example, you may also clear errors generated from other tests in the testing sequence.

Multicarrier Cabinet

Order of Investigation	Short Test Sequence	Long Test Sequence	D/ ND[1]
Analog Ring Generator Initialization Test (#117)	X	X	ND
Analog Ring Generator Query Test (#118)	X	X	ND
Battery & Battery Charger Query Test (#5) (a)	X	X	ND
AC Power Query Test (#78) (b)	X	X	ND
Power Unit Query Test (Carrier E) (#127) (c)	X	X	ND
Power Unit Query Test (Carrier D) (#127) (c)	X	X	ND
Power Unit Query Test (Carrier A) (#127) (c)	X	X	ND
Power Unit Query Test (Carrier B) (#127) (c)	X	X	ND
Power Unit Query Test (Carrier C) (#127) (c)	X	X	ND
Emergency Transfer Query Test (#124) (d)	X	X	ND
Cabinet Sensors Query Test (#122) (e)	X	X	ND
External Alarm Lead Query Test (#120) (f)	X	X	ND

1 D = Destructive; ND = Nondestructive

Notes

a. Refer to POWER (Battery & Battery Charger) Maintenance documentation for a description of this test.

b. Refer to AC-POWER (AC Power) Maintenance documentation for a description of this test.

c. Refer to CARR-POW (Carrier Port Power Unit) for AC- and DC-Powered Systems Maintenance documentation for a description of this test.

d. Refer to EMG-XFER (Emergency Transfer) Maintenance documentation for a description of this test.

e. Refer to CABINET (Cabinet Sensors) Maintenance documentation for a description of this test.

f. Refer to EXT-DEV (External Alarm) Maintenance documentation for a description of this test.

Single-Carrier Cabinet

Order of Investigation	Short Test Sequence	Long Test Sequence	D/ ND[1]
Analog Ring Generator Initialization Test (#117)	X	X	ND
Analog Ring Generator Query Test (#118)	X	X	ND
Single-Carrier Power Query Test (#79) (a)	X	X	ND
Emergency Transfer Query Test (#124) (b)	X	X	ND
External Alarm Lead Query Test (#120) (c)	X	X	ND

1 D = Destructive; ND = Nondestructive

Notes:

a. Refer to DC-POWER (Power) Maintenance documentation for a description of this test.

b. Refer to EMG-XFER (Emergency Transfer) Maintenance documentation for a description of this test.

c. Refer to EXT-DEV (External Alarm) Maintenance documentation for a description of this test.

Analog Ring Generator Initialization Test (#117)

The TN768, or TN780 will report an error to the system software if the ringing voltage falls to low (only if system software has made a request to the TN768, or TN780 to monitor the voltage). The Analog Ring Generator Initialization Test sends a request to the TN768, or TN780. If there are redundant tone/clock circuit packs in the port network, then the request is sent only to the active tone/clock.

Table 10-554. TEST #117 Analog Ring Generator Initialization Test

Error Code	Test Result	Description/Recommendation
1 1000 1001 1003 1115 2012 2100	ABORT	The system software is unable to determine the active tone/clock circuit pack, unable to allocated the resources necessary to run the test, or unable to send a down link message. 1. Wait for the green LED on the active tone/clock to go out; use the **status port-network** command to determine the active Tone/Clock circuit pack. 2. Rerun the test. If the test aborts again, refer to TDM-CLK Maintenance documentation.
2000	ABORT	Response to the request was not received within the allowable time period. 1. Look for TDM-CLK errors and alarms. Resolve all other Tone/Clock problems first. 2. Rerun the test.
1005	ABORT	The tone/clock is unable to read the analog ringing voltage level when the tone/clock is in the Processor Interface slot. This test is not available for the Processor Port Network in this configuration.
	PASS	The active Tone/Clock has successfully been enabled to monitor the ringing voltage level.

Analog Ring Generator Query Test (#118)

This test requests the Active Tone-Clock circuit pack to check the ringing voltage. The tone/clock circuit pack replies with PASS if the ringing voltage is adequate to ring the analog phones. If not, the active tone/clock circuit pack replies with a FAIL. The Analog Ring Generator Query Test then reports the result.

Table 10-555. TEST #118 Analog Ring Generator Query Test

Error Code	Test Result	Description/Recommendation
1 1000 1001 1003 1115 2012 2100	ABORT	Could not seize the resources to run the test. Other maintenance is running on the active tone/clock circuit pack. 1. Wait for the green LED on the active tone/clock circuit pack to go out; (use the **status port-network** command to determine the Active tone/clock circuit pack). 2. Rerun the test. If the test aborts again, refer to TDM-CLK (TDM Bus Clock) Maintenance documentation.
2000	ABORT	Response to the request was not received within the allowable time period. 1. Look for TDM-CLK errors and alarms. Resolve all other tone/clock problems first. 2. Rerun the test.
1005	ABORT	The tone/clock is unable to read the analog ringing voltage level when the tone/clock is in the Processor Interface slot. This test is not available for the Processor Port Network in this configuration.
	FAIL	Ringing voltage is below acceptable levels. PROCEDURE FOR A MULTI-CARRIER CABINET SYSTEM. 1. If this is a High or Critical Reliability system, determine the active Tone-Clock circuit pack by issuing a **status port network** command. Make the Standby Tone-Clock circuit pack active via the **set tone-clock PC** command and rerun the test. a. If the test passes, the trouble is with the new Standby Tone-Clock circuit pack. Refer to the TONE-BD (Tone-Clock Circuit Pack) Maintenance documentation for details on replacing the Standby Tone-Clock circuit pack. After the circuit pack is replaced, make this Tone-Clock active again by issuing the **set tone-clock PC** command and rerun the test. b. If the test fails, then proceed with Step 2. 2. Look for and resolve CARR-POW (Carrier Port Power Supply Unit) alarms first, and then rerun the test. 3. Check fuse F9 on the Power Distribution Unit. Replace F9 if it is blown, and rerun the test. If the test still fails, then an Analog Line circuit pack could be defective and causing the Analog Ring Generator and/or fuse F9 to fail. 4. Unseat all Analog circuit packs in the affected cabinet, and replace fuse F9 again if needed. Rerun the test.

Continued on next page

Table 10-555. TEST #118 Analog Ring Generator Query Test — *Continued*

Error Code	Test Result	Description/Recommendation
	FAIL *(cont'd.)*	5. If the test passes, then the Analog Ring Generator is healthy, and one of the Analog circuit packs is defective. Replace the Analog circuit packs one at a time, and rerun the test to determine which circuit pack is causing the problem. When the defective Analog circuit pack is found, replace it. Rerun the test. If the test still fails, proceed with Step 6. 6. Since the test still fails, the Analog Ring Generator is defective. Replace the Analog Ring Generator as follows: a. Open the PDU compartment door. The door is hinged on the right and has a magnetic latch on the left. b. If the reset button on the Analog Ring Generator is out, press it in. c. Originate calls to several analog stations on different port circuit packs in different carriers in the affected port network. d. If called stations ring, the fault is cleared. Proceed to Step f. If no stations ring, replace the Analog Ring Generator. To replace the Analog Ring Generator, first disconnect the output (P6) and input (P7) connectors from the Analog Ring Generator and then remove the two screws at the base of the Analog Ring Generator. e. Replace the Analog Ring Generator, secure it with the two screws at the base, and replace the P6 and P7 connectors (P6 goes on top). f. Rerun the test. If the test still fails, proceed to Step 7. 7. The active tone/clock may be faulty and incorrectly reporting the level of the ringing voltage. Replace the Active tone/clock and rerun the test. Refer to TONE-BD (Tone-Clock Circuit Pack) Maintenance documentation for details on replacing the tone/clock. Rerun the test. If the test still fails, escalate the problem.

Continued on next page

Table 10-555. TEST #118 Analog Ring Generator Query Test — *Continued*

Error Code	Test Result	Description/Recommendation
	FAIL *(cont'd.)*	PROCEDURE FOR A SINGLE-CARRIER CABINET SYSTEM. This failure indicates that there is no ringing voltage in the carrier where the active tone/clock circuit pack resides. Other carriers may or may not have ringing voltage. 1. If this is a Duplicated Option system, then determine the active Tone-Clock circuit pack by issuing a **status port-network** command. Make the Standby Tone-Clock circuit pack active via the **set tone-clock PC** command and rerun the test. a. If the test passes, then the trouble is with the "new" Standby Tone-Clock circuit pack. Refer to TONE-BD (Tone-Clock Circuit Pack) Maintenance documentation for details on replacing the Standby Tone-Clock circuit pack. After the circuit pack is replaced, make this Tone-Clock active again by issuing the **set tone-clock PC** command and rerun the test. b. If the test fails, then proceed with Step 2. 2. Unseat all analog circuit packs in the cabinet that contains the Active Tone/Clock circuit pack and rerun the test. 3. If the test passes, then the Analog Ring Generator is healthy and one of the analog circuit packs is defective. Replace the analog circuit packs one at a time, and rerun the test to determine which circuit pack is causing the problem. When the defective analog circuit pack is found, replace it. Rerun the test. If the test still fails, go to Step 4. 4. Replace the WP-91153 power unit for the affected carrier, and rerun the test. If the test still fails, go to Step 5. 5. The active tone/clock may be faulty and incorrectly reporting the level of the ringing voltage. Replace the active tone/clock and rerun the test. Refer to TONE-BD Maintenance documentation for details on replacing the active tone/clock circuit pack. Rerun the test. If the test still fails, escalate the problem.
	PASS	FOR A MULTI-CARRIER CABINET SYSTEM. The analog ringing voltage level is acceptable. FOR A SINGLE-CARRIER CABINET SYSTEM. For a single-carrier cabinet stack, ringing voltage is acceptable in the cabinet containing the active tone/clock circuit pack.

S-SYN-BD (Speech Synthesis Circuit Pack)

MO Name (in Alarm Log)	Alarm Level	Initial Command to Run[1]	Full Name of MO
S-SYN-BD	MIN	test board PCSS sh	Speech Synthesis Circuit Pack
S-SYN-BD	WRN	test board PCSS sh	Speech Synthesis Circuit Pack

1 Where P is the port network number (1 for PPN and 2 for EPN); C is the carrier designation (for example, A, B, C, D, or E); and SS is the address of the slot in the carrier where the circuit pack is located (for example, 01, 02, ..., etc.).

Refer to XXX-BD (Common Port Circuit Pack) Maintenance documentation for circuit pack level errors. See also S-SYN-PT (Speech Synthesis Port) Maintenance documentation for related port information.

S-SYN-PT (Speech Synthesis Port)

MO Name (in Alarm Log)	Alarm Level	Initial Command to Run[1]	Full Name of MO
S-SYN-PT	MAJOR	test port PCSSpp sh	Speech Synthesis Port
S-SYN-PT	MINOR	test port PCSSpp l	Speech Synthesis Port
S-SYN-PT	WARNING	test port PCSSpp sh	Speech Synthesis Port

1 Where P is the port network number (1 for PPN and 2 for EPN); C is the carrier designation (for example, A, B, C, D, or E); and SS is the address of the slot in the carrier where the circuit pack is located (for example, 01, 02, ..., etc.).

The TN725 Speech Synthesis circuit pack provides four independent Speech Synthesis Ports which may be connected to any of the voice time slots on the TDM Bus. Each Speech Synthesis Port consists of a speech synthesizer device (SSD) and is managed by a custom-coded programmable speech synthesizer (PSS) controller. The PSS controller is, in turn, controlled by the on-board microprocessor via a command interface specifically designed for this application. The PSS controller's main function is the orderly transfer of encoded speech from the speech vocabulary read-only memory (ROM) to the SSDs. The SSDs decode it and produce 64 kb/s 5-255 PCM (Pulse Code Modulation) speech. The encoded speech is stored in up to 512K bytes of on-board read-only memory (ROM). In addition, each Speech Synthesis Port has an associated dual-tone multifrequency (DTMF) receiver to receive touch-tone digits from a station set connected to the port via a voice time slot. The station set may be connected to the Speech Synthesis Port through either a line or trunk circuit.

When there is an incoming call to a port, the "listen" network time slot is connected to the DTMF receiver input and the "talk" network time slot is connected to the SSD output. This enables the Speech Synthesis Port to support speech synthesis features or touch-tone input with voice response features. Some of the features that use the Speech Synthesis Port's capabilities include Leave Word Calling, Automatic Circuit Assurance, Automatic Wakeup (hotel-motel), and do Not Disturb (hotel-motel).

The Speech Synthesis circuit pack should not be confused with the Announcement circuit pack as different voice features are supported by each circuit pack.

Hardware Error Log Entries and Test to Clear Values

Speech Synthesis Port Error Log Entries

Error Type	Aux Data	Associated Test	Alarm Level	On/Off Board	Test to Clear Value
0[1]	0	Any	Any	Any	test port PCSSpp sh r 1
1(a)	17672	None			
18	0	busyout port PCSSpp	WARNING	OFF	release port PCsspp
130(b)		None	WARNING	ON	test port PCSSpp sh
257		Speech Synthesis PSS Handshake Test (#168)	MAJOR	ON	test port PCSSpp sh r 2
513	17922	Speech Synthesis Memory Test (#166)	MINOR	ON	test port PCSSpp sh r 2
769	17664	Speech Synthesis DTMF Receiver Inquiry Test (#164)	MINOR	ON	test port PCSSpp sh r 2
1025	17670	Speech Synthesis SSD Inquiry Test (#167)	MINOR	ON	test port PCSSpp sh r 2
1281		Speech Synthesis DSP Tone Test (#165)	MINOR	ON	test port PCSSpp sh r 2
1537		Speech Synthesis Memory Test (#166)	MINOR	ON	test port PCSSpp sh r 2
1793		Speech Synthesis DTMF Receiver Test (#163)	MINOR	ON	test port PCSSpp l r 2
2049(c)		Conference Circuit Test (#7)	MINOR	ON	test port PCSSpp l r 2
2305		NPE Crosstalk Test (#6)	MINOR	ON	test port PCSSpp l r 2
3840(d)	Any	None			

1 Run the Short Test Sequence first. If all tests pass, run the Long Test Sequence. Refer to the appropriate test description and follow the recommended procedures.

Notes:

a. An in-line failure of the on-board microprocessor/PSS handshake has occurred. Refer to Test #168 for repair procedures.

b. This error type indicates that the circuit pack been removed or has been insane for more than 11 minutes. To clear the error, reinsert or replace the circuit pack.

c. A transient error that does not cause an alarm can occasionally occur during a SPE, TDM BUS, or Tone Clock interchange. Test the port and follow the instructions for conference Test (#7).

d. This error is not service-affecting and no action is required.

System Technician-Demanded Tests: Descriptions and Error Codes

Always investigate tests in the order presented in the table below when inspecting errors in the system. By clearing error codes associated with the *NPE Crosstalk Test,* for example, you may also clear errors generated from other tests in the testing sequence.

For example, you may also clear errors generated from other tests in the testing sequence.

Order of Investigation	Short Test Sequence	Long Test Sequence	D/ ND[1]
Speech Synthesis PSS Handshake Test (#168)	X	X	ND
NPE Crosstalk Test (#6)		X	ND
Conference Circuit Test (#7)		X	ND
Speech Synthesis DTMF Receiver Test (#163)		X	ND
Speech Synthesis Memory Test (#166)	X	X	ND
Speech Synthesis DSP Tone Test (#165)	X	X	ND
Speech Synthesis SSD Inquiry Test (#167)	X	X	ND
Speech Synthesis DTMF Receiver Inquiry Test (#164)	X	X	ND
Speech Synthesis Parameter Update Test (#169)	X	X	ND

1 D = Destructive; ND = Nondestructive

NPE Crosstalk Test (#6)

One or more NPEs reside on each circuit pack with a TDM Bus interface. The NPE controls port connectivity and gain, and provides conferencing functions on a per-port basis. The NPE Crosstalk Test verifies that this port's NPE channel talks on the selected time slot and never crosses over to time slots reserved for other connections. If the NPE is not working correctly, one-way and noisy connections may occur. This test is usually only part of a port's Long Test Sequence and takes about 20 to 30 seconds to complete.

Table 10-556. TEST #6 NPE Crosstalk Test

Error Code	Test Result	Description/Recommendation
	ABORT	Could not allocate the necessary system resources to run this test. 1. Retry the command at one-minute intervals a maximum of 5 times.
1000	ABORT	System resources required to run this test are not available. The port may be busy with a valid call and therefore unavailable for certain tests. You must wait until the port is idle (yellow LED if off) before retesting. 1. If the port is idle, retry the command at one-minute intervals a maximum of 5 times.
1001	ABORT	Could not allocate the necessary system resources to run this test. 1. Retry the command at one-minute intervals a maximum of 5 times.
1002	ABORT	The system could not allocate time slots for the test. The system may be under heavy traffic conditions or it may have time slots out-of-service due to TDM-BUS errors. Refer to TDM-BUS (TDM Bus) Maintenance documentation to diagnose any Active TDM-BUS errors. 1. If system has no TDM-BUS errors and is not handling heavy traffic, repeat test at one-minute intervals a maximum of 5 times.
1003	ABORT	The system could not allocate a tone receiver for the test. The system may be oversized for the number of Tone Detectors present or some Tone Detectors may be out-of-service. 1. Look for TTR-LEV errors in the Error Log. If present, refer to TTR-LEV (TTR Level) Maintenance documentation. 2. Look for TONE-PT errors in the Error Log. If present, refer to TONE-PT (Tone Generator) Maintenance documentation. 3. If neither condition exists, retry the test at one-minute intervals a maximum of 5 times.
1004	ABORT	The port was seized by a valid call during the test and the test has been aborted. You must wait until the port is idle (yellow LED if off) before retesting. 1. Retry the command at one-minute intervals a maximum of 5 times. 2. If the test continues to abort and the port is not in use, escalate the problem.

Continued on next page

Table 10-556. TEST #6 NPE Crosstalk Test — *Continued*

Error Code	Test Result	Description/Recommendation
1020	ABORT	The test did not run due to an already existing error on the specific port or a more general circuit pack error. 1. Examine Error Log for existing errors against this port or the circuit pack and attempt to diagnose the already existing error.
2000	ABORT	Response to the test request was not received within the allowable time period.
2100	ABORT	Could not allocate the necessary system resources to run this test. 1. Retry the command at one-minute intervals a maximum of 5 times.
Any	FAIL	The NPE of the tested port was found to be transmitting in error. This causes noisy and unreliable connections. 1. Replace the circuit pack.
	PASS	The port is correctly using its allocated time slots. User-reported troubles on this port should be investigated using other port tests and examining the Error Log.

Conference Circuit Test (#7)

One or more NPEs reside on each circuit pack with a TDM Bus interface. The NPE controls port connectivity and gain, and provides conferencing functions on a per-port basis. The Conference Circuit Test verifies that the NPE channel for the port being tested can correctly perform the conferencing function. The NPE is instructed to listen to several different tones and conference the tones together. The resulting signal is then measured by a Tone Detector port. If the level of the tone is within a certain range, the test passes.

Table 10-557. TEST #7 Conference Circuit Test

Error Code	Test Result	Description/Recommendation
	ABORT	Could not allocate the necessary system resources to run this test. 1. Retry the command at one-minute intervals a maximum of 5 times.
1000	ABORT	System resources required to run this test are not available. The port may be busy with a valid call and therefore unavailable for certain tests. You must wait until the port is idle (yellow LED if off) before retesting. 1. If the port is idle, retry the command at one-minute intervals a maximum of 5 times.
1004	ABORT	The port was seized by a valid call during the test and the test has been aborted. You must wait until the port is idle (yellow LED if off) before retesting. 1. Retry the command at one-minute intervals a maximum of 5 times. 2. If the test continues to abort and the port is not in use, escalate the problem.
1020	ABORT	The test did not run due to an already existing error on the specific port or a more general circuit pack error. 1. Examine Error Log for existing errors against this port or the circuit pack and attempt to diagnose the already existing error.
2000	ABORT	Response to the test request was not received within the allowable time period.
2100	ABORT	Could not allocate the necessary system resources to run this test. 1. Retry the command at one-minute intervals a maximum of 5 times.
Any	FAIL	The NPE of the tested port did not conference the tones correctly. This causes noisy and unreliable connections. 1. Retry the test. 2. If the Test continues to fail then replace the circuit pack.
	PASS	The port can correctly conference multiple connections. User-reported troubles on this port should be investigated using other port tests and examining the Error Log.

Speech Synthesis DTMF Receiver Test (#163)

A series of DTMF tones are conferenced from the TDM Bus into the port's DTMF receiver and checked to see if the correct tones have been detected during the correct intervals. If all the DTMF tones were detected correctly, the test passes. If any of the tones were not detected correctly, the test fails.

Table 10-558. TEST #163 Speech Synthesis DTMF Receiver

Error Code	Test Result	Description/Recommendation
	ABORT	Could not allocate the necessary system resources to run this test. 1. Retry the command at one-minute intervals a maximum of 5 times.
1000	ABORT	System resources required to run this test are not available. The port may be busy with a valid call and therefore unavailable for certain tests. You must wait until the port is idle (yellow LED if off) before retesting. 1. If the port is idle, retry the command at one-minute intervals a maximum of 5 times.
2000	ABORT	Response to the test request was not received within the allowable time period.
2100	ABORT	Could not allocate the necessary system resources to run this test. 1. Retry the command at one-minute intervals a maximum of 5 times.
Any	FAIL	DTMF tones were not detected. This type of failure may cause features using touch-tone input to the Speech Synthesis Port to malfunction. 1. Verify that the Tone-Clock circuit pack is functioning correctly by checking the Error Log and using the **test tone-clock long** command. 2. If the test fails again, replace the Speech Synthesis circuit pack.
	PASS	The port has detected all DTMF tones correctly. User-reported troubles should be investigated using other tests and verifying other ports on this circuit pack are working correctly.

Speech Synthesis DTMF Receiver Inquiry Test (#164)

This test determines the sanity of the port's DTMF receiver. The on-board microprocessor tests the port's DTMF receiver and determines if it is in a sane (test passes) or insane (test fails) condition.

Table 10-559. TEST #164 Speech Synthesis DTMF Receiver Inquiry Test

Error Code	Test Result	Description/Recommendation
	ABORT	Could not allocate the necessary system resources to run this test. 1. Retry the command at one-minute intervals a maximum of 5 times.
1000	ABORT	System resources required to run this test are not available. The port may be busy with a valid call and therefore unavailable for certain tests. You must wait until the port is idle (yellow LED if off) before retesting. 1. If the port is idle, retry the command at one-minute intervals a maximum of 5 times.
2000	ABORT	Response to the test request was not received within the allowable time period.
2100	ABORT	Could not allocate the necessary system resources to run this test. 1. Retry the command at one-minute intervals a maximum of 5 times.
Any	FAIL	The DTMF receiver for this port is insane. 1. If the test fails again, replace the circuit pack.
	PASS	The DTMF receiver for this port is sane. User-reported troubles should be investigated using other tests and verifying other ports on this circuit pack are working correctly.

Speech Synthesis DSP Tone Test (#165)

The digital signal processor (DSP) associated with each port can generate a 440-Hz tone whose presence can be detected by TN748 General Purpose Tone Detector circuit packs. A 440-Hz tone is generated for 500 msec on a specified time slot which is being listened to by the detector circuit. If the detector determines the tone is present on the time slot, the test passes; otherwise, it fails.

Table 10-560. TEST #165 Speech Synthesis DSP Tone Test

Error Code	Test Result	Description/Recommendation
	ABORT	Could not allocate the necessary system resources to run this test. 1. Retry the command at one-minute intervals a maximum of 5 times.
1000	ABORT	System resources required to run this test are not available. The port may be busy with a valid call and therefore unavailable for certain tests. You must wait until the port is idle (yellow LED if off) before retesting. 1. If the port is idle retry the command at one-minute intervals a maximum of 5 times.
1001 1002 1003	ABORT	System resources required to run this test are not available. 1. Retry the command at one-minute intervals a maximum of 5 times.
1021	ABORT	The 440-Hz tone was not detected by the Tone Detector circuit and inter-digit time-out has occurred on the Tone Detector circuit. 1. Retry the command at one-minute intervals a maximum of 5 times. 2. If the test continues to abort, verify all Tone Detector circuit packs in the system are functioning correctly by checking the Error Log and using the **test board PCSS long** command. Replace any faulty Tone Detector circuit packs and repeat the test. 3. If the test continues to abort, replace the Speech Synthesis circuit pack.

Continued on next page

Table 10-560. TEST #165 Speech Synthesis DSP Tone Test — *Continued*

Error Code	Test Result	Description/Recommendation
2000	ABORT	Response to the test request was not received within the allowable time period.
2100	ABORT	Could not allocate the necessary system resources to run this test. 1. Retry the command at one-minute intervals a maximum of 5 times.
Any	FAIL	The 440-Hz tone was not detected by the Tone Detector circuits. 1. If the test fails again, verify all Tone Detector circuit packs in the system are functioning correctly by checking the Error Log and using the **test board PCSS long** command. Replace any faulty Tone Detector circuit packs and repeat the test. 2. If the test fails again, replace the Speech Synthesis circuit pack.
	PASS	The 440-Hz tone has been detected correctly. User-reported troubles should be investigated using other tests and verifying other ports on this circuit pack are working correctly.

Speech Synthesis Memory Test (#166)

The encoded speech for the Speech Synthesis circuit pack is stored in on-board read-only memory. A checksum is computed for each 32K speech memory block and compared against a known checksum value. If all computed checksum values are successfully compared against the stored checksum values, the test passes. If, while testing the speech complex memory, the on-board microprocessor finds a memory error, the test is terminated and a failure is reported. This type of failure may affect other ports on the Speech Synthesis circuit pack, resulting in errors or alarms on each port.

Table 10-561. TEST #166 Speech Synthesis Memory Test

Error Code	Test Result	Description/Recommendation
	ABORT	Could not allocate the necessary system resources to run this test. 1. Retry the command at one-minute intervals a maximum of 5 times.
1000	ABORT	System resources required to run this test are not available. The port may be busy with a valid call and therefore unavailable for certain tests. You must wait until the port is idle (yellow LED if off) before retesting. 1. If the port is idle, retry the command at one-minute intervals a maximum of 5 times.
1019	ABORT	Test is already running on a different port, possibly due to background maintenance activity. Only one of these tests may be active on a circuit pack at a time. 1. Retry the command at one-minute intervals a maximum of 5 times.
2000	ABORT	Response to the test request was not received within the allowable time period.
2100	ABORT	Could not allocate the necessary system resources to run this test. 1. Retry the command at one-minute intervals a maximum of 5 times.
Any	FAIL	The computed checksum from the speech vocabulary read-only memory did not compare correctly with the stored checksum. This type of failure may cause features using the Speech Synthesis Port's speech services to malfunction and result in degradation of synthesized speech quality ranging from insignificant to major. 1. Replace the circuit pack.
	PASS	The computed checksum values were successfully compared against the stored checksum values. User-reported troubles should be investigated using other tests and verifying other ports on this circuit pack are working correctly.

Speech Synthesis SSD Inquiry Test (#167)

This test determines the sanity of the specified port's Speech Synthesis Device (SSD). The on-board microprocessor tests the port's SSD and determines if it is in a sane (test passes) or insane (test fails) condition. Other ports on the Speech Synthesis circuit pack continue to function correctly during this type of failure.

Table 10-562. TEST #167 Speech Synthesis SSD Inquiry Test

Error Code	Test Result	Description/Recommendation
	ABORT	Could not allocate the necessary system resources to run this test. 1. Retry the command at one-minute intervals a maximum of 5 times.
1000	ABORT	System resources required to run this test are not available. The port may be busy with a valid call and therefore unavailable for certain tests. You must wait until the port is idle (yellow LED if off) before retesting. 1. If the port is idle, retry the command at one-minute intervals a maximum of 5 times.
2000	ABORT	Response to the test request was not received within the allowable time period.
2100	ABORT	Could not allocate the necessary system resources to run this test. 1. Retry the command at one-minute intervals a maximum of 5 times.
Any	FAIL	The SSD is insane. 1. Replace the circuit pack.
	PASS	The SSD is sane. User-reported troubles should be investigated using other tests and verifying other ports on this circuit pack are working correctly.

Speech Synthesis PSS Handshake Test (#168)

This test verifies control functionality between the on-board microprocessor and PSS controller. A failure occurs if either of the following events occur:

- The on-board microprocessor times out while waiting for the PSS controller to respond.
- An invalid command is received by the on-board microprocessor from the PSS controller.

This type of failure affects all four ports on the Speech Synthesis circuit pack, resulting in errors or alarms on each port.

Table 10-563. TEST #168 Speech Synthesis PSS Handshake Test

Error Code	Test Result	Description/Recommendation
	ABORT	Could not allocate the necessary system resources to run this test. 1. Retry the command at one-minute intervals a maximum of 5 times.
1000	ABORT	System resources required to run this test are not available. The port may be busy with a valid call and therefore unavailable for certain tests. You must wait until the port is idle (yellow LED if off) before retesting. 1. If the port is idle, retry the command at one-minute intervals a maximum of 5 times.
2000	ABORT	Response to the test request was not received within the allowable time period.
2100	ABORT	Could not allocate the necessary system resources to run this test. 1. Retry the command at one-minute intervals a maximum of 5 times.
Any	FAIL	The on-board microprocessor has timed out while waiting for the PSS controller to respond or an invalid command has been received by the on-board microprocessor from the PSS controller. This type of failure may cause features using the Speech Synthesis Port's speech services to malfunction. 1. Replace the circuit pack.
	PASS	The on-board microprocessor/PSS handshake is working correctly. User-reported troubles should be investigated using other tests and verifying other ports on this circuit pack are working correctly.

Speech Synthesis Parameter Update Test (#169)

This test updates the DTMF interdigit time-out parameter used by the Speech Synthesis circuit pack to be consistent with that specified by the switch processing element (SPE).

Table 10-564. TEST #169 Speech Synthesis Parameter Update Test

Error Code	Test Result	Description/Recommendation
	ABORT	Could not allocate the necessary system resources to run this test. 1. Retry the command at one-minute intervals a maximum of 5 times.
1000	ABORT	System resources required to run this test are not available. The port may be busy with a valid call and therefore unavailable for certain tests. You must wait until the port is idle (yellow LED if off) before retesting. 1. If the port is idle, retry the command at one-minute intervals a maximum of 5 times.
2100	ABORT	Could not allocate the necessary system resources to run this test. 1. Retry the command at one-minute intervals a maximum of 5 times.
Any	FAIL	An internal system error has occurred.
	PASS	The DTMF interdigit time-out parameter has been updated. 1. User-reported troubles should be investigated using other tests and by verifying that other ports on this circuit pack are working correctly.

SEC-CDR (SEC-CDR Link Maintenance)

MO Name (in Alarm Log)	Alarm Level	Initial Command to Run	Full Name of MO
PRI-CDR/SEC-CDR	MINOR	test cdr-link primary/secondary l	CDR Link
PRI-CDR/SEC-CDR	WARNING	test cdr-link primary/secondary	CDR Link

The SEC-CDR (SEC-CDR Link) maintenance strategy is covered in the PRI-CDR/SEC-CDR (PRI-CDR Link) Maintenance documentation.

SHDW-CIR (Common Shadow Circuit)

MO Name (in Alarm Log)	Alarm Level	Initial Command to Run	Full Name of MO
SHDW-CIR[1]	MAJOR	test duplication 1C sh	Common Shadow Circuit

1 Determine the carrier to test via the Port field from the Alarm or Error Log.

The Common Shadow Circuit is that portion of the Duplication Interface circuit pack that is responsible for memory shadowing in a High or Critical Reliability system. All memory writes on the active SPE are detected by the Common Shadow Circuit on the active Duplication Interface circuit pack through the Memory Bus (M-BUS—bus used by control complex circuit packs to write/read memory and to communicate with one another). The write information is then passed to the Common Shadow Circuit on the Standby Duplication Interface circuit pack via the ICC which then executes the write to memory. In this way, the Standby SPE is kept up-to-date with the Active SPE and, as a result, is always ready to take over for the Active SPE.

Refer to DUPINT (Duplication Interface Circuit Pack) Maintenance documentation for a detailed description of SPE-to-SPE connectivity and STBY-SPE (Standby SPE) Maintenance documentation for a description of how the Standby SPE is maintained.

Error Log Entries and Test to Clear Values

Table 10-565. Common Shadow Circuit Error Log Entries

Error Type	Aux Data	Associated Test	Alarm Level	On/Off Board	Test to Clear Value
0 (a)	0	Any	Any	Any	test duplication 1C sh r 1
1		Common Shadow Circuit Loop Back Test (#283)	MAJOR	ON	test duplication 1C r 3
257	Any	Common Shadow Circuit Time-Out Query Test (#285)	MAJOR	OFF	test duplication 1C l r 3
513	1,2	Common Shadow Circuit Address Decoder Test (#284)	MAJOR	ON	test duplication 1C r 3
769	Any	Common Shadow Circuit Fiber Cable Present Test (#1289)	MAJOR	OFF	test duplication 1C r 3
1025 (b)	257	Common Shadow Circuit Time-Out Query Test (#285)	MAJOR	OFF	test duplication 1C l r 3

Notes:

a. Run the Short Test Sequence first. If all tests pass, run the Long Test Sequence. Refer to the appropriate test description and follow the recommended procedures.

b. Indicates that a DUPINT FIFO overflow condition occurred. Some shadowed information was lost, so shadowing is disabled. Refer to the FAIL description for the "Common Shadow Circuit M-Bus Time-Out Query Test (#285)".

System Technician-Demanded Tests: Descriptions and Error Codes

Always investigate tests in the order they are presented in the table below. By clearing error codes associated with the *Duplication Interface Circuit Pack Status Query Test,* for example, you may also clear errors generated from other tests in the testing sequence.

Table 10-566. System Technician-Demanded Tests: DUPINT

Order of Investigation	Short Test Sequence		Long Test Sequence		D/ND[1]
	Active	Standby	Active	Standby	
Duplication Interface Circuit Pack Status Query Test (#315)	X	X	X	X	ND
Duplication Interface Circuit Pack Sanity Maze Test (#277)	X	X	X	X	ND
Duplication Interface Circuit Pack SPE A Loop Back Test (#275)	X	X	X	X	ND
Duplication Interface Circuit Pack SPE B Loop Back Test (#276)	X	X	X	X	ND
Duplication Interface Circuit Pack Administration Terminal Loop Back Test (#274)(a)	X	X	X	X	ND
Inter-Duplication Interface Circuit Pack Loop Back Test (#280)	X	X	X	X	ND
Duplication Interface Circuit Pack Background Test Query Test (#271)	X	X	X	X	ND
Duplication Interface Circuit Pack Invalid Message Query Test (#272)	X	X	X	X	ND
Common Shadow Circuit Fiber Cable Present Test (#1289)	X	X	X	X	ND
Common Shadow Circuit M-BUS Time-out Query Test (#285) (b)			X	X	ND
Common Shadow Circuit Loop Back Test (#283) (b)		X		X	ND
Common Shadow Circuit Address Decoder Test (#284) (b)		X		X	ND
SPE Select Switch Query Test (#278) (c)	X	X	X	X	ND

1 D = Destructive, ND = Non-destructive

Notes:

a. Refer to DUPINT (Duplication Interface Circuit Pack) Maintenance documentation for description of this test.

b. Refer to SPE-SELEC (SPE Select Switch) Maintenance documentation for description of this test.

Common Shadow Circuit Loop Back Test (#283)

This test allows maintenance to loop data through the common shadow circuit and examine the results. The test is designed to test the shadow data and shadow address portions of the common shadow circuit. The test is done entirely on the Duplication Interface circuit pack.

The Common Shadow Circuit is put into Maintenance Mode before the test is run. Maintenance software writes data into an address in the maintenance address space. This data is routed through the common shadow circuit and put into the FIFO bank of the common shadow circuit. Maintenance reads the contents of the FIFO bank and compares them with the value written to the maintenance address space. The test is repeated with another address in the maintenance address space.

This test does not disable the common shadow circuit and can be run with no disruption in service. The test must be executed from control carrier B to test the Duplication Interface B Common Shadow Circuit and from control carrier A to test the Duplication Interface A Common Shadow Circuit.

Table 10-567. TEST #283 Common Shadow Circuit Loop Back Test

Error Code	Test Result	Description/Recommendation
1029 1030 2011 2012 2013 2014 2015 2016 2017 2018 2019 2020 2021 2022 2023 2024 2025 2051	ABORT	Refer to the STBY-SPE Maintenance documentation for a description of these error codes.
1022	ABORT	Internal system error 1. Retry the command at 1-minute intervals a maximum of 5 times.

Continued on next page

Table 10-567. TEST #283 Common Shadow Circuit Loop Back Test — *Continued*

Error Code	Test Result	Description/Recommendation
	FAIL	The Common Shadow Circuit portion of the Duplication Interface circuit pack is defective and the Duplication Interface circuit pack must be replaced. 1. Follow the "Repair Procedures for High and Critical Reliability" section in Chapter 6, "Reliability Systems: A Maintenance Aid" and replace the Duplication Interface circuit pack. 2. Rerun the test.
	NO BOARD	The Duplication Interface circuit pack has failed to handshake with either the active Maintenance/Tape Processor (in the case of Duplication Interface circuit pack A) or from Duplication Interface circuit pack A (in the case of Duplication Interface circuit pack B). 1. Refer to NO BOARD description for the Duplication Interface Circuit Pack Status Query Test (#315) in DUPINT.
	PASS	Part of the Common Shadow Circuit is operating properly; however, Tests #284 and #285 must pass before the Common Shadow Circuit on this Duplication Interface circuit pack is considered sane.

Common Shadow Circuit Address Decoder Test (#284)

This test verifies the operation of the shadow address decoder portion of the common shadow circuit. Software writes data into memory locations that should not be shadowed. The maintenance register of the common shadow circuit is examined to determine if the shadow address decoder permitted the write to be shadowed. The test fails if the writes were shadowed. This test is run only when demanded by maintenance software and can be run on both Duplication Interface circuit pack A and Duplication Interface circuit pack B. The same addresses used in the Common Shadow Circuit Loop Back Test (#283) are used.

Table 10-568. TEST #284 Common Shadow Circuit Address Decoder Test

Error Code	Test Result	Description/Recommendation
1029 1030 2011 2012 2013 2014 2015 2016 2017 2018 2019 2020 2021 2022 2023 2024 2025 2051	ABORT	Refer to the STBY-SPE Maintenance documentation for a description of these error codes.
	ABORT	Internal system error
1022	ABORT	Internal system error 1. Retry the command at 1-minute intervals a maximum of 5 times.
	FAIL	The Common Shadow Circuit portion of the Duplication Interface circuit pack is defective and the Duplication Interface circuit pack must be replaced. 1. Follow the “Repair Procedures for High and Critical Reliability” in Chapter 6, ‘‘Reliability Systems: A Maintenance Aid’’ and replace the Duplication Interface circuit pack. 2. Rerun the test.
	NO BOARD	The Duplication Interface circuit pack has failed to handshake with either the active Maintenance/Tape Processor (in the case of Duplication Interface circuit pack A) or the Duplication Interface circuit pack A (in the case of Duplication Interface circuit pack B). 1. Refer to NO BOARD description for the Duplication Interface Circuit Pack Status Query Test (#315) in DUPINT Maintenance documentation.
	PASS	Part of the Common Shadow Circuit is operating properly; however, Tests #283 and #285 must pass before the Common Shadow Circuit on this Duplication Interface circuit pack is considered sane.

Common Shadow Circuit M-Bus Time-Out Query Test (#285)

An M-BUS time-out occurs when the Common Shadow Circuit on the Standby SPE attempts a memory write to the Memory circuit pack via the M-BUS and the write fails. The Common Shadow Circuit M-BUS Time-Out Query first tries to refresh the Standby SPE memory and then queries the Common Shadow Circuit on the Standby Duplication Interface circuit pack for the number of M-BUS time-outs. If there were any M-BUS time-outs, the test fails.

Table 10-569. TEST #285 Common Shadow Circuit M-BUS Time-Out Query Test

Error Code	Test Result	Description/Recommendation
1029 1030 2011 2012 2014 2015 2016 2017 2018 2019 2020 2021 2022 2023 2024 2025 2051 2054	ABORT	Refer to the STBY-SPE Maintenance documentation for a description of these error codes.
1960	ABORT	The active SPE is currently locked on-line or one of the DUPINT circuit packs is missing or broken. 1. If the active SPE is locked on-line, move the SPE select switches back to the AUTO position and rerun the test. 2. If the active SPE is not locked on-line, check for DUPINT errors and resolve those before rerunning the test.

Continued on next page

Table 10-569. TEST #285 Common Shadow Circuit M-BUS Time-Out Query Test *— Continued*

Error Code	Test Result	Description/Recommendation
1961	ABORT	The tested Common Shadow Circuit fiber cable is missing or connected improperly or the Active/Standby DUPINT circuit pack is defective. 1. Verify that the Common Shadow Circuit fiber cable on the Standby/Active SPE DUPINT circuit pack is present and connected properly. 2. Rerun the test. If the test still fails, replace the cable. 3. Rerun the test. If the test still fails, then one of the DUPINT circuit packs may be defective. a. Replace the standby DUPINT circuit pack first. b. If the test still fails, then perform a lock switch interchange. **NOTE:** This results in a COLD-1 SPE reset on the new active SPE. c. Then replace the DUPINT circuit pack in the new standby SPE with the DUPINT circuit pack that was removed in the previous step. 4. Rerun the test. 5. Test the Standby SPE with the **test spe-standby short** command, and address all Duplication Interface circuit pack, Common Shadow Circuit, and Maintenance/Tape Processor tests that do not pass.
1000	ABORT	System resources required to run this test are not available.
2000	ABORT	Response to the test request was not received within the allowable time period.
2013	ABORT	System resources required to run this test are not available.
2033	ABORT	Internal system error 1. Retry the command at 1-minute intervals a maximum of 5 times.
2337	ABORT	Indicates that a DUPINT FIFO overflow condition occurred. Some shadowed information was lost, so shadowing is disabled. Refer to the FAIL description for this test.

Continued on next page

Table 10-569. TEST #285 Common Shadow Circuit M-BUS Time-Out Query Test — *Continued*

Error Code	Test Result	Description/Recommendation
	FAIL	The tested Common Shadow Circuit is experiencing time-outs while trying to write to the Memory circuit pack over the M-BUS. 1. Verify that there are the same number of PI (Processor Interface) circuit packs in each carrier. 2. Verify that there are the same number of NETPKT (Network Control/Packet Interface) circuit packs in each carrier. 3. Resolve all other DUPINT (Duplication Interface Circuit Pack), SHDW-CIR (Common Shadow Circuit), and PR-MAINT (Maintenance/Tape Processor) alarms before addressing this problem. 4. Rerun the test. If the test still fails, then the Memory circuit pack on the tested carrier is defective or the M-BUS is defective on the Standby carrier. Refer to the "Repair Procedures for High and Critical Reliability" section in Chapter 6, ''Reliability Systems: A Maintenance Aid'' and replace the Memory circuit pack. 5. Rerun the test. 6. Test the Standby SPE with the **test spe-standby short** command, and address all Duplication Interface circuit pack, Common Shadow Circuit, and Maintenance/Tape Processor tests that do not pass.
	NO BOARD	The Duplication Interface circuit pack has failed to handshake with either the active Maintenance/Tape Processor (in the case of Duplication Interface circuit pack A) or the Duplication Interface circuit pack A (in the case of Duplication Interface circuit pack B). 1. Refer to NO BOARD for a description of the Duplication Interface Circuit Pack Status Query Test (#315) in DUPINT Maintenance documentation.
	PASS	Part of the Common Shadow Circuit is operating properly. However, Tests #283 and #284 must pass before the Common Shadow Circuit on this Duplication Interface circuit pack is considered sane.

Common Shadow Circuit Fiber Cable Present Test (#1289)

This test checks for the presence of the Common shadow Circuit fiber cable. If the cable is missing or improperly installed, the test fails. The test also fails if the transceivers or the circuit pack are defective.

Table 10-570. TEST #1289 Common Shadow Circuit Fiber Cable Present Test

Error Code	Test Result	Description/Recommendation
1000	ABORT	System resources required to run this test are not available.
2000	ABORT	Response to the test request was not received within the allowable time period.
2033	ABORT	Internal system error 1. Retry the command at 1-minute intervals a maximum of 5 times.
Any	FAIL	The tested Common Shadow Circuit fiber cable is missing or connected improperly or the Active/Standby DUPINT circuit pack is defective. 1. Verify that the Common Shadow Circuit fiber cable on the Standby/Active SPE DUPINT circuit pack is present and connected properly. 2. Rerun the test. If the test still fails, replace the cable. 3. Rerun the test. If the test still fails, then one of the DUPINT circuit packs may be defective. a. Replace the standby DUPINT circuit pack first. b. If the test still fails, then perform a lock switch interchange. **NOTE:** This results in a COLD-1 SPE reset on the new active SPE. c. Then replace the DUPINT circuit pack in the new standby SPE with the DUPINT circuit pack that was removed in the previous step. 4. Rerun the test. 5. Test the Standby SPE with the **test spe-standby short** command, and address all Duplication Interface circuit pack, Common Shadow Circuit, and Maintenance/Tape Processor tests that do not pass.

Continued on next page

Table 10-570. TEST #1289 Common Shadow Circuit Fiber Cable Present Test — *Continued*

Error Code	Test Result	Description/Recommendation
	NO BOARD	The Duplication Interface circuit pack has failed to handshake with either the active Maintenance/Tape Processor (in the case of Duplication Interface circuit pack A) or the Duplication Interface circuit pack A (in the case of Duplication Interface circuit pack B). 1. Refer to NO BOARD for a description of the Duplication Interface Circuit Pack Status Query Test (#315) in DUPINT Maintenance documentation.
	PASS	Part of the Common Shadow Circuit is operating properly. However, Tests #283 and #284 must pass before the Common Shadow Circuit on this Duplication Interface circuit pack is considered sane.

SHDW-LNK (Memory Shadowing Link)

MO Name (in Alarm Log)	Alarm Level	Initial Command to Run	Full Name of MO
SHDW-LNK	MAJOR	test shadow-link	Memory Shadowing Link

A High or Critical Reliability system contains two SPEs. One is known as the Active SPE and is the SPE that is currently responsible for all call processing, administration, and maintenance activities being performed by the system. The other SPE is known as the Standby SPE. The role of the Standby SPE is to be ready to take over as the Active SPE in the event that the current Active SPE fails.

The Standby SPE is usually in a mode known as Standby Mode in which it is ready to assume the role of the Active SPE. To do this, Standby SPE Memory (MEM-BD) must be an up-to-date reflection of Active SPE Memory. This is accomplished via the memory shadowing mechanism described below.

The SHDW-CIR (Common Shadow Circuit) on the Active SPE Duplication Interface circuit pack (DUPINT, TN772) detects all memory writes that the Active SPE Processor (PROCR) makes to Active SPE Memory. The Active SPE Common Shadow Circuit sends this information to the Common Shadow Circuit on the Standby SPE Duplication Interface circuit pack via the Inter-Carrier Cable (ICC). The Common Shadow Circuit on the Standby SPE Duplication Interface circuit pack then writes the data to Standby SPE Memory. This logical connection between Active SPE Memory and Standby SPE Memory is known as the SHDW-LNK (Memory Shadowing Link).

Although most of the components comprising the Memory Shadowing Link (that is, Active SPE Memory, both sets of Common Shadow Circuit, and Standby SPE Memory) may be tested individually, it is useful to test the integrity of the entire logical connection to verify that the shadowing mechanism is functional and that Standby SPE Memory is the same as Active SPE Memory. Therefore, this testing is done under the guise of the Memory Shadowing Link.

The logical connection between the Memory circuit packs of the two SPEs of a High or Critical Reliability system is shown in Figure 10-88 on page 10-1495. This connection includes the A carrier memory bus, the A carrier TN772 Duplication Interface circuit pack, the shadow extension in the ICC, the B carrier TN772 Duplication Interface circuit pack, and the B carrier memory bus. The dotted lines in Figure 10-88 on page 10-1495 represent important logical connections between components. The following circuit pack abbreviations are used in Figure 10-88 on page 10-1495:

- DUPINT for Duplication Interface circuit pack
- PI for Processor Interface
- Net Pkt for Network Controller/Packet Interface

Please refer to the DUPINT, SHDW-CIR, MEM-BD, PROCR, PR-MAINT, and STBY-SPE Maintenance documentation for more detailed descriptions of these components.

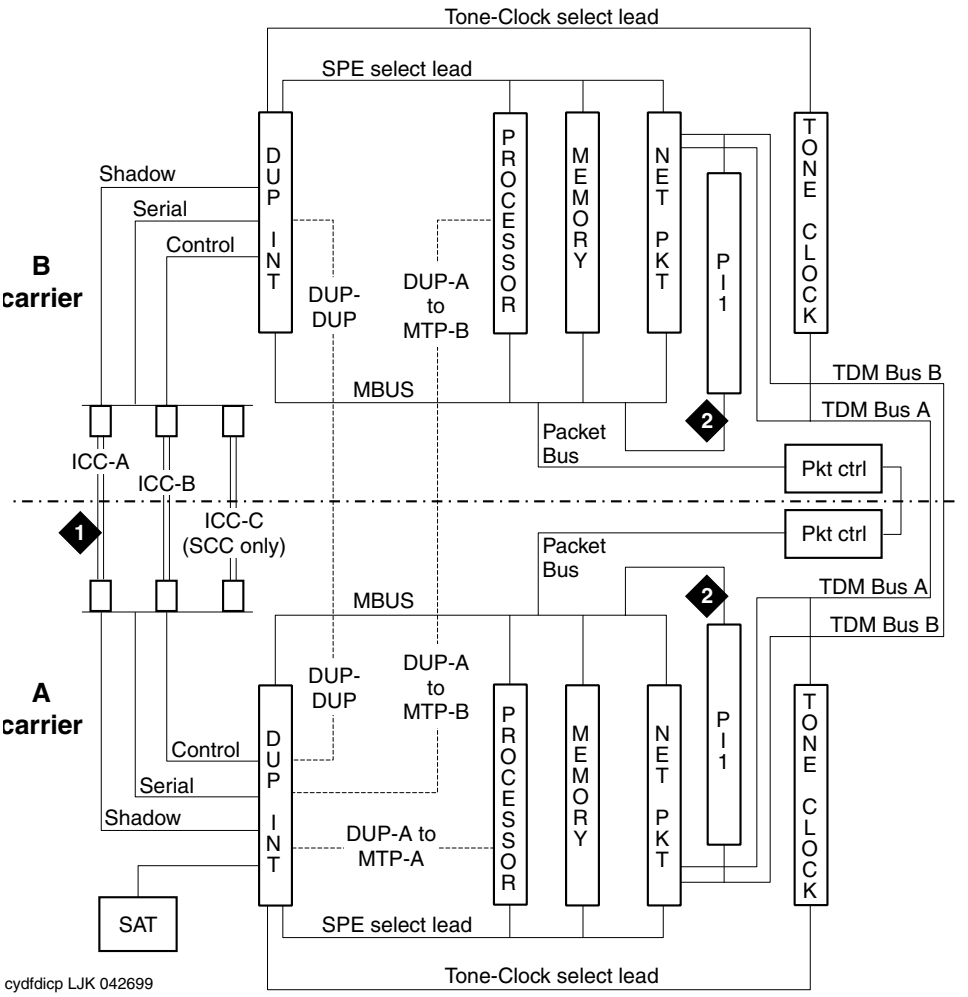

Figure Notes:

1. Fiber optic connection (front of TN792)
2. Processor Interface circuit pack

Figure 10-88. SHDW-LNK Interactions (High or Critical Reliability)

Error Log Entries and Test to Clear Values

Table 10-571. Standby SPE Error Log Entries

Error Type	Aux Data	Associated Test	Alarm Level	On/Off Board	Test to Clear Value
0[1]	0	Any	Any	Any	test shadow-link
2047		Shadow Link Test (#318)	MAJOR	OFF	test shadow-link
2048		Shadow Link Test (#318)	MAJOR	OFF	test shadow-link
2049		Shadow Link Test (#318)	MAJOR	OFF	test shadow-link
2050		Shadow Link Test (#318)	MAJOR	OFF	test shadow-link

1 Run the Short Test Sequence first. If all tests pass, run the Long Test Sequence. Refer to the appropriate test description and follow the recommended procedures.

System Technician-Demanded Tests: Descriptions and Error Codes

Always investigate tests in the order presented in the table below. By clearing error codes associated with the *Shadow Link Test,* for example, you may also clear errors generated from other tests in the testing sequence.

The Short and Long Test Sequences for Memory Shadowing Link are identical. Only one test (Test #318) tests the Memory Shadowing Link.

Order of Investigation	Short Test Sequence	Long Test Sequence	D/ND[1]
Shadow Link Test (#318)	X	X	ND

1 D = Destructive; ND = Nondestructive

Shadow Link Test (#318)

Interactions

One interaction with the Standby SPE that results when testing the Memory Shadowing Link is as follows:

If the Standby SPE is in Maintenance Mode because a previous test command on a Standby SPE component was issued within the last three minutes, the Active SPE takes the Standby SPE out of Maintenance Mode and puts it in Standby Mode when the Shadow Link Test is run. Therefore, issuing another test command on a Standby SPE component requires that the Standby SPE be put into Maintenance Mode again before the test is run. Thus, the user notices a 1- to 20-minute delay when running another Standby SPE test after executing the Shadow Link Test.

NOTE:
In most cases, the delay lasts only one to two minutes. However, a 20-minute delay is possible.

Another interaction that the Memory Shadowing Link has with the Standby SPE is that if the Shadow Link Test fails, an error of type 67 is logged, and an alarm is raised against the STBY-SPE (Standby SPE). This is because the failure of the Shadow Link Test implies that Standby SPE Memory may not be an up-to-date reflection of Active SPE Memory and, therefore, that the Standby SPE may not be ready to take over as the Active SPE. Refer to “Hardware Error Log Entries and Test to Clear Values” section of STBY-SPE (Standby SPE) Maintenance documentation for more details.

Test Description

Because of the number and nature of steps that it performs, the Shadow Link Test takes from 1 to 5 minutes to run, depending on the load that the system is experiencing at the time. The Shadow Link Test performs the following activities to verify the integrity of the Memory Shadowing Link:

286-based systems

- Disables shadowing from Active SPE Memory (MEM-BD) to Standby SPE Memory.
- Requests the Standby SPE Maintenance/Tape Processor (PR-MAINT) to release the Standby SPE processor (PROCR) for the Standby SPE Processor to clear Standby SPE Memory (zero all memory locations).
- Waits for Standby SPE Processor to report that Standby SPE Memory was successfully cleared.
- Requests the Standby SPE Maintenance/Tape Processor to hold the Standby SPE processor reset.

- Enables shadowing from Active SPE Memory to Standby SPE Memory and causes all of Active SPE Memory to be written to Standby SPE Memory (a refresh operation).
- Disables shadowing from Active SPE Memory to Standby SPE Memory.
- Requests the Standby SPE Maintenance/Tape Processor to release the Standby SPE Processor for the Standby SPE Processor to perform a RAM checksum test on Standby SPE Memory (just updated by the refresh operation).
- Waits for Standby SPE Processor to report the results of the RAM checksum test.
- Requests the Standby SPE Maintenance/Tape Processor to hold the Standby SPE Processor reset.
- Enables shadowing from Active SPE Memory to Standby SPE Memory and causes all of Active SPE Memory to be written to Standby SPE Memory (a refresh operation).

Flash-based systems

- Disables shadowing from Active SPE Memory (MEM-BD) to Standby SPE Memory.
- Requests the Standby SPE Maintenance/Tape Processor (PR-MAINT) to release the Standby SPE processor (PROCR) for the Standby SPE Processor to clear a magic area in Standby SPE Memory.
- Requests the Standby SPE Maintenance/Tape Processor to hold the Standby SPE processor reset.
- Enables shadowing from Active SPE Memory to Standby SPE Memory and causes all of Active SPE Memory to be written to Standby SPE Memory (a refresh operation).
- Disables shadowing from Active SPE Memory to Standby SPE Memory.
- Requests the Standby SPE Maintenance/Tape Processor to release the Standby SPE Processor for the Standby SPE Processor to perform a verification on the magic area in Standby SPE Memory (just updated by the refresh operation).
- Requests the Standby SPE Maintenance/Tape Processor to hold the Standby SPE Processor reset.
- Enables shadowing from Active SPE Memory to Standby SPE Memory and causes all of Active SPE Memory to be written to Standby SPE Memory (a refresh operation).

NOTE:
The shadowing verification method used for 80386 systems does not do a complete RAM checksum. It only clears a special magic area in the Standby SPE's memory and then updates that area by shadowing. It then verifies the value in that magic area based on the

Active SPE's value. Thus, the test is not as comprehensive in terms of testing the memory aspect of shadowing as is the 80286 method. The reason for this is the inability to shadow flash memory.

Management Terminal Message Line Errors

In addition to Shadow Link Test (#318) Error Codes, the following message line errors may be displayed when attempting to run this test. They are:

- "Standby SPE not available; for information use status system"

  This message line error corresponds to Error Code 2020. It is displayed if the Shadow Link Test is attempted within the first five minutes of a restart of the Active SPE (that is, prior to the Active SPE holding the Standby SPE reset and refreshing it).

- "Standby SPE busy with another task; for information use status system"

  This message line error corresponds to Error Code 2018. It is displayed if the Shadow Link Test is attempted while the Active SPE is performing some Maintenance Mode activity on the Standby SPE other than system technician-demanded maintenance.

- "Cannot interrupt Standby SPE while entering maintenance mode; please try later"

  This message line error is displayed when **test shadow-link** has been issued and subsequently canceled and then **refresh spe-standby** is issued while maintenance software is in the process of performing the Shadow Link Test. Allow up to three minutes for the Shadow Link Test to complete before issuing the **refresh spe-standby** command again.

In either case, the following actions should be taken:

1. Issue the **refresh spe-standby** command to put the Standby SPE in Standby Mode. This command may have to be issued multiple times. If the **refresh spe-standby** command successfully completes 5 times without the Standby SPE becoming labeled "standby" on the status system form, wait 20 minutes. This does not include cases where the command completes with the terminal message line errors "Refresh not successful; use 'display errors' to check for STBY-SPE errors" or "Cannot interrupt Standby SPE while entering maintenance mode; please try later." Issue the **refresh spe-standby** command once more.
2. Repeat the command.
3. Issue the **test spe-standby long** command.

Table 10-572. TEST #318 Shadow Link Test

Error Code	Test Result	Description/Recommendation
1029 2011 2012 2013 2014 2018 2020 2024 2051	ABORT	Refer to STBY-SPE Maintenance documentation for a description of these error codes.
1960	ABORT	The active SPE is currently locked on-line or one of the DUPINT circuit packs is missing or broken. 1. If the active SPE is locked on-line, move the SPE select switches back to the AUTO position and rerun the test. 2. If the active SPE is not locked on-line, check for DUPINT errors and resolve those before rerunning the test.
1961	ABORT	The tested Common Shadow Circuit fiber cable is missing or connected improperly or the Active/Standby DUPINT circuit pack is defective. 1. Verify that the Common Shadow Circuit fiber cable on the Standby/Active SPE DUPINT circuit pack is present and connected properly. 2. Rerun the test. If the test still fails, replace the cable. 3. Rerun the test. If the test still fails, then one of the DUPINT circuit packs may be defective. a. Replace the standby DUPINT circuit pack first. b. If the test still fails, then perform a lock switch interchange. **NOTE:** This results in a COLD-1 SPE reset on the new active SPE. c. Then replace the DUPINT circuit pack in the new standby SPE with the DUPINT circuit pack that was removed in the previous step. 4. Rerun the test. 5. Test the Standby SPE with the **test spe-standby short** command, and address all Duplication Interface circuit pack, Common Shadow Circuit, and Maintenance/Tape Processor tests that do not pass.

Continued on next page

Table 10-572. TEST #318 Shadow Link Test — *Continued*

Error Code	Test Result	Description/Recommendation
2047	FAIL	The Standby SPE Maintenance/Tape Processor released the Standby SPE processor with a request to clear Standby SPE Memory; Standby SPE Memory was not successfully cleared. 1. Check for Standby SPE Processor errors and alarms. Refer to PROCR (80286 Processor Circuit Pack) Maintenance documentation and follow the prescribed procedures. 2. Check for Standby SPE Memory errors and alarms. Refer to MEM-BD (Memory) Maintenance documentation and follow the prescribed procedures. 3. If all problems found in Steps 1 and 2 have now been repaired, proceed with Step 5. If no problems were found in Steps 1 and 2, proceed with Step 4.

Continued on next page

Table 10-572. TEST #318 Shadow Link Test — *Continued*

Error Code	Test Result	Description/Recommendation
		4. Issue the **display errors** command and check to see if an Error Type 58 is logged against STBY-SPE. If an Error Type 58 is logged **OR** if no error types are logged against STBY-SPE, the problem is either the Standby SPE Processor circuit pack or the Standby SPE Memory circuit pack. ■ If the red LED on the Standby SPE Processor circuit pack is on and the Standby SPE Processor circuit pack has not been replaced yet, replace the Standby SPE Processor circuit pack as described in Chapter 6, ''Reliability Systems: A Maintenance Aid'' and proceed with Steps 5, 6, and 7. If the red LED on the Standby SPE Processor circuit pack is on and the Standby SPE Processor circuit pack has been replaced, replace the Standby SPE Memory circuit pack as described in Chapter 6 and proceed with Steps 5, 6, and 7. ■ If the red LED on the Standby SPE Memory circuit pack is on, replace the Standby SPE Memory circuit pack as described in Chapter 6 and proceed with Steps 5, 6, and 7. ■ If neither red LED is on **AND** if this is the first attempt to clear the problem, replace the Standby SPE Processor circuit pack as described in Chapter 6 and proceed with Steps 5, 6, and 7. ■ If neither red LED is on **AND** if this is the second attempt to clear the problem (that is, the Standby SPE Processor circuit pack has already been replaced), replace the Standby SPE Memory circuit pack as described in Chapter 6 and proceed with Steps 5, 6, and 7. ■ If neither red LED is on **AND** if this is the third attempt to clear the problem (the Standby SPE Processor and Standby SPE Memory circuit packs have been replaced), escalate the problem.

Continued on next page

Table 10-572. TEST #318 Shadow Link Test — *Continued*

Error Code	Test Result	Description/Recommendation
2047 *(cont'd.)*	FAIL	5. Issue the **refresh spe-standby** command to put the Standby SPE in Standby Mode. This command may have to be issued multiple times. If the **refresh spe-standby** command successfully completes 5 times without the Standby SPE becoming labeled "standby" on the status system form, wait 20 minutes. This does not include cases where the command completes with the terminal message line errors "Refresh not successful; use 'display errors' to check for STBY-SPE errors" or "Cannot interrupt Standby SPE while entering maintenance mode; please try later." Issue the **refresh spe-standby** command once more. 6. Repeat the test. 7. Issue the **test spe-standby long** command to thoroughly test all Standby SPE components.
2048	FAIL	The Standby SPE Maintenance/Tape Processor released the Standby SPE Processor with a request to perform the RAM Checksum Test on Standby SPE Memory and the RAM checksum was determined to be incorrect. This indicates that a problem exists with one or more components that make up the Memory Shadowing Link such that Active SPE Memory was not accurately shadowed to Standby SPE Memory. 1. Check for both Active SPE and Standby SPE Common Shadow Circuit errors and alarms. Refer to SHDW-CIR (Common Shadow Circuit) Maintenance documentation and follow the prescribed procedures. 2. Check for Standby SPE Memory errors and alarms. Refer to MEM-BD (Memory) Maintenance documentation and follow the prescribed procedures. 3. Check the Inter-Carrier Cable to see if it is loose or disconnected. If so, follow the repair procedures for reconnecting the Inter-Carrier Cable described in Chapter 6. 4. If all problems found in Steps 1, 2, or 3 have now been repaired, proceed with Step 9. If no problems were found in Steps 1, 2, or 3, proceed with Step 5. 5. Issue the **display errors** command and check to see if an Error Type 80 is logged against STBY-SPE. If so, the problem is the carrier A Duplication Interface circuit pack. Replace the carrier A Duplication Interface circuit pack as described in Chapter 6 and proceed with Steps 9, 10, and 11.

Continued on next page

Table 10-572. TEST #318 Shadow Link Test — *Continued*

Error Code	Test Result	Description/Recommendation
2048 *(cont'd.)*	FAIL	6. Issue the **display errors** command and check to see if an Error Type 82 is logged against STBY-SPE. If so, the problem is the carrier B Duplication Interface circuit pack. Replace the carrier B Duplication Interface circuit pack as described in Chapter 6 and proceed with Steps 9, 10, and 11. 7. Issue the **display errors** command and check to see if an Error Type 85 is logged against STBY-SPE. If so, the problem may be the Standby SPE Memory circuit pack. Replace the Memory circuit pack as described in Chapter 6 and proceed with Steps 9, 10, and 11. 8. Issue the **display errors** command and check to see if an Error Type 58 is logged against STBY-SPE. If an Error Type 58 is logged **OR** if no error types are logged against STBY-SPE, the problem is either the Standby SPE Processor circuit pack, or the Standby SPE Memory circuit pack, or the carrier B Duplication-Interface circuit pack, or the carrier A Duplication-Interface circuit pack. ■ If the red LED on the Standby SPE Processor circuit pack is on and the Standby SPE Processor circuit pack has not been replaced yet, replace the Standby SPE Processor circuit pack as described in Chapter 6 and proceed with Steps 9, 10, and 11. If the red LED on the Standby SPE Processor circuit pack is on and the Standby SPE Processor circuit pack has been replaced, replace the Standby SPE Memory circuit pack as described in Chapter 6 and proceed with Steps 9, 10, and 11. ■ If the red LED on the Standby SPE Memory circuit pack is on, replace the Standby SPE Memory circuit pack as described in Chapter 6 and proceed with Steps 9, 10, and 11. ■ If the red LED on the Standby SPE Duplication Interface circuit pack is on, replace the Standby SPE Duplication Interface circuit pack as described in Chapter 6 and proceed with Steps 9, 10, and 11. 9. If the red LED on the Active SPE Duplication Interface circuit pack is on, replace the Active SPE Duplication Interface circuit pack as described in Chapter 6 and proceed with Steps 9, 10, and 11

Continued on next page

Table 10-572. TEST #318 Shadow Link Test — *Continued*

Error Code	Test Result	Description/Recommendation
2048 *(cont'd.)*	FAIL	Refer to Chapter 6 to understand how to correctly replace the Duplication-Interface circuit pack. ■ If none of the four red LEDs are on **AND** if this is the first attempt to clear the problem, replace the Standby SPE Processor circuit pack as described in Chapter 6 and proceed with Steps 9, 10, and 11. ■ If none of the four red LEDs are on **AND** if this is the second attempt to clear the problem (that is, the Standby SPE Processor circuit pack has already been replaced), replace the Standby SPE Memory circuit pack as described in Chapter 6 and proceed with Steps 9, 10, and 11. ■ If none of the four red LEDs are on **AND** if this is the third attempt to clear the problem (that is, the Standby SPE Processor and Standby SPE Memory circuit packs have already been replaced), replace the Standby SPE Duplication Interface circuit pack as described in Chapter 6 and proceed with Steps 9, 10, and 11. ■ If none of the four red LEDs are on **AND** if this is the fourth attempt to clear the problem (that is, the Standby SPE Processor, Standby SPE Memory, and Standby SPE Duplication Interface circuit packs have already been replaced), replace the Active SPE Duplication Interface circuit pack as described in Chapter 6 and proceed with Steps 9, 10, and 11. **NOTE:** The Duplication Interface circuit pack must be made to reside in the Standby SPE before it can be replaced.

Continued on next page

Table 10-572. TEST #318 Shadow Link Test — *Continued*

Error Code	Test Result	Description/Recommendation
2048 *(cont'd.)*	FAIL	Refer to Chapter 6 to understand how to correctly replace the Duplication-Interface circuit pack. ■ If none of the four red LEDs are on **AND** if this is the fifth attempt to clear the problem (the Standby SPE Processor, Standby SPE Memory, and both Duplication Interface circuit packs have been replaced), escalate the problem. 10. Issue the **refresh spe-standby** command to put the Standby SPE in Standby Mode. This command may have to be issued multiple times. If the **refresh spe-standby** command successfully completes 5 times without the Standby SPE becoming labeled "standby" on the status system form, wait 20 minutes. This does not include cases where the command completes with the terminal message line errors "Refresh not successful; use 'display errors' to check for STBY-SPE errors" or "Cannot interrupt Standby SPE while entering maintenance mode; please try later." Issue the **refresh spe-standby** command once more. 11. Repeat the test. 12. Issue the **test spe-standby long** command to thoroughly test all Standby SPE components.

Continued on next page

Table 10-572. TEST #318 Shadow Link Test — *Continued*

Error Code	Test Result	Description/Recommendation
2049	FAIL	The Standby SPE Maintenance/Tape Processor released the Standby SPE processor with a request to perform the RAM Checksum Test on Standby SPE Memory. The RAM checksum was correct; however, a significant discrepancy was detected between two special Standby SPE Memory locations that should contain the same time stamp value as the one shadowed over from the Active SPE. This indicates that a problem exists with one or more components that make up the Memory Shadowing Link such that Active SPE Memory was not accurately shadowed to Standby SPE Memory. 1. Check for both Active SPE and Standby SPE Common Shadow Circuit errors and alarms. Refer to SHDW-CIR (Common Shadow Circuit) Maintenance documentation and follow the prescribed procedures. 2. Check for Standby SPE Memory errors and alarms. Refer to MEM-BD (Memory) Maintenance documentation and follow the prescribed procedures. 3. Check the Inter-Carrier Cable to see if it is loose or disconnected. Also if intermittent problems are occurring inspect the Inter-Carrier Cable for cuts or broken leads. If so, follow the repair procedures for reconnecting the Inter-Carrier Cable described in Chapter 6. 4. If all problems found in Steps 1, 2, or 3 have now been repaired, proceed with Step 9. If no problems were found in Steps 1, 2, or 3, proceed with Step 5. 5. Issue the **display errors** command and check to see if an Error Type 80 is logged against STBY-SPE. If so, the problem is the carrier A Duplication Interface circuit pack. Replace the carrier A Duplication Interface circuit pack as described in Chapter 6 and proceed with Steps 9, 10, and 11. 6. Issue the **display errors** command and check to see if an Error Type 82 is logged against STBY-SPE. If so, the problem is the carrier B Duplication Interface circuit pack. Replace the carrier B Duplication Interface circuit pack as described in Chapter 6 and proceed with Steps 9, 10, and 11. 7. Issue the **display errors** command and check to see if an Error Type 85 is logged against STBY-SPE. If so, the problem may be the Standby SPE Memory circuit pack. Replace the Memory circuit pack as described in Chapter 6 and proceed with Steps 9, 10, and 11.

Continued on next page

Table 10-572. TEST #318 Shadow Link Test — *Continued*

Error Code	Test Result	Description/Recommendation
2049 *(cont'd.)*	FAIL *(cont'd.)*	8. Issue the **display errors** command and check to see if an Error Type 58 is logged against STBY-SPE. If an Error Type 58 is logged **OR** if no error types are logged against STBY-SPE, the problem is either the Standby SPE Processor circuit pack, or the Standby SPE Memory circuit pack, or the carrier B Duplication-Interface circuit pack, or the carrier A Duplication-Interface circuit pack. ■ If the red LED on the Standby SPE Processor circuit pack is on and the Standby SPE Processor circuit pack has not been replaced yet, replace the Standby SPE Processor circuit pack as described in Chapter 6 and proceed with Steps 9, 10, and 11. If the red LED on the Standby SPE Processor circuit pack is on and the Standby SPE Processor circuit pack has been replaced, replace the Standby SPE Memory circuit pack as described in Chapter 6 and proceed with Steps 9, 10, and 11. ■ If the red LED on the Standby SPE Memory circuit pack is lit, replace the Standby SPE Memory circuit pack as described in Chapter 6 and proceed with Steps 9, 10, and 11. ■ If the red LED on the Standby SPE Duplication Interface circuit pack is lit, replace the Standby SPE Duplication Interface circuit pack as described in Chapter 6 and proceed with Steps 9, 10, and 11. ■ If the red LED on the Active SPE Duplication Interface circuit pack is lit, replace the Active SPE Duplication Interface circuit pack as described in Chapter 6 and proceed with Steps 9, 10, and 11. **NOTE:** The Duplication Interface circuit pack must be made to reside in the Standby SPE before it can be replaced.

Continued on next page

Table 10-572. TEST #318 Shadow Link Test — *Continued*

Error Code	Test Result	Description/Recommendation
2049 *(cont'd.)*	FAIL	Refer to the "Replacing Defective SPE Circuit Packs" section in Chapter 6 to understand how to correctly replace the Duplication-Interface circuit pack. ■ If none of the four red LEDs are lit **AND** if this is the first attempt to clear the problem, replace the Standby SPE Processor circuit pack as described in Chapter 6 and proceed with Steps 9, 10, and 11. ■ If none of the four red LEDs are lit **AND** if this is the second attempt to clear the problem (that is, the Standby SPE Processor circuit pack has already been replaced), replace the Standby SPE Memory circuit pack as described in Chapter 6 and proceed with Steps 9, 10, and 11. ■ If none of the four red LEDs are lit **AND** if this is the third attempt to clear the problem (that is, the Standby SPE Processor and Standby SPE Memory circuit packs have already been replaced), replace the Standby SPE Duplication Interface circuit pack as described in Chapter 6 and proceed with Steps 9, 10, and 11. ■ If none of the four red LEDs are lit **AND** if this is the fourth attempt to clear the problem (that is, the Standby SPE Processor, Standby SPE Memory, and Standby SPE Duplication Interface circuit packs have already been replaced), replace the Active SPE Duplication Interface circuit pack as described in Chapter 6 and proceed with Steps 9, 10, and 11. **NOTE:** The Duplication Interface circuit pack must be made to reside in the Standby SPE before it can be replaced.

Continued on next page

Table 10-572. TEST #318 Shadow Link Test — *Continued*

Error Code	Test Result	Description/Recommendation
2049 *(cont'd.)*	FAIL	Refer to the "Replacing Defective SPE Circuit Packs" section in Chapter 6 to understand how to correctly replace the Duplication-Interface circuit pack. ■ If none of the four red LEDs are lit **AND** if this is the fifth attempt to clear the problem (the Standby SPE Processor, Standby SPE Memory, and both Duplication Interface circuit packs have been replaced), escalate the problem. 9. Issue the **refresh spe-standby** command to put the Standby SPE in Standby Mode. This command may have to be issued multiple times. If the **refresh spe-standby** command successfully completes 5 times without the Standby SPE becoming labeled "standby" on the status system form, wait 20 minutes. This does not include cases where the command completes with the terminal message line errors "Refresh not successful; use 'display errors' to check for STBY-SPE errors" or "Cannot interrupt Standby SPE while entering maintenance mode; please try later." Issue the **refresh spe-standby** command once more. 10. Repeat the test. 11. Issue the **test spe-standby long** command to thoroughly test all Standby SPE components.

Continued on next page

Table 10-572. TEST #318 Shadow Link Test — *Continued*

Error Code	Test Result	Description/Recommendation
2050	FAIL	The Standby SPE Maintenance/Tape Processor released the Standby SPE Processor with a request to perform the RAM Checksum Test on Standby SPE Memory. The RAM checksum was correct and the two special Standby SPE Memory locations contain the same time stamp value as the one shadowed over from the Active SPE; however, that time stamp value is significantly different from the value of the Standby SPE's Time-of-Day clock. This indicates that either the Active SPE Time-of-Day clock has never been set (for example, at system installation time) or that the Active SPE Time-of-Day clock was set (with a significant change) while shadowing to the Standby SPE was disabled. 1. Issue the **refresh spe-standby** command to put the Standby SPE in Standby Mode. This command may have to be issued multiple times. If the **refresh spe-standby** command successfully completes 5 times without the Standby SPE becoming labeled "standby" on the status system form, wait 20 minutes. This does not include cases where the command completes with the terminal message line errors "Refresh not successful; use 'display errors' to check for STBY-SPE errors" or "Cannot interrupt Standby SPE while entering maintenance mode; please try later." Issue the **refresh spe-standby** command once more. 2. Issue the **set time** command and set the Time-of-Day clock. 3. Repeat the test.
	PASS	When the Shadow Link Test passes, the integrity of the Memory Shadowing Link has been verified and as long as memory shadowing is enabled, Standby SPE Memory is an up-to-date reflection of Active SPE Memory. This test also provides a positive indication of the functionality of Active SPE Memory, both sets of Common Shadow Circuit, and Standby SPE Memory.

SPE-SELEC (SPE Select Switch)

MO Name (in Alarm Log)	Alarm Level	Initial Command to Run[1]	Full Name of MO
SPE-SELEC	MAJOR	test duplication-interface 1C sh	SPE Select Switch
SPE-SELEC	WARNING	test duplication-interface 1C sh	SPE Select Switch

1 Where C is the carrier determined by the Port field in the error or alarm log.

The SPE Select Switch MO tracks the state of the SPE Select Switches in a High or Critical Reliability system. The switches are located on the Duplication Interface circuit pack and can be used to hard-select the active processor in a High or Critical Reliability system. Each switch has three positions: SPE-A (the left position), AUTO (the middle position), and SPE-B (the right position). To hard-select SPE-A, both switches must be in the SPE-A position. To hard-select SPE-B, both switches must be in the SPE-B position. Any other combination of SPE Select Switches leaves control of the active SPE to the software. Whenever a switch is out of the AUTO position, a Warning alarm is raised. If both switches are out of the AUTO position for six hours, a Major alarm is raised. Duplication Interface circuit pack B reports the state of the SPE-SELEC Switch B to Duplication Interface circuit pack A which, in turn, reports the state of SPE-SELEC Switch A directly to the system software.

NOTE:
Each switch is a separate MO. If both switches are out of the AUTO position, then both switches are alarmed.

It is also possible to get an “init cause” of the SPE-SELEC Switch if SPE B is active and power to carrier B is lost. In this case, an SPE switch to SPE A occurs, and the “init cause” shows either “SPE-Select Switch” or “SPE-Down.”

Error Log Entries and Test to Clear Values

Table 10-573. SPE Select Switch Error Log Entries

Error Type	Aux Data	Associated Test	Alarm Level	On/Off Board	Test to Clear Value
0[1]	0	Any	Any	Any	test duplication-interface 1C sh r 1
1	Any	SPE Select Query Test (#278)	WARNING / MAJOR[2]	OFF	test duplication-interface 1C sh r
257	any	SPE Select Query Test (#278)	WARNING / MAJOR[2]	OFF	test duplication-interface 1C sh r 2

1 Run the Short Test Sequence first. If all tests pass, run the Long Test Sequence. Refer to the appropriate test description and follow the recommended procedures.

2 This error type initially raises a Warning alarm. If this error type persists and alarms are not downgraded on this MO due to the values of **set options**, then, after a period of time, a Major alarm is raised.

Notes:

a. The Warning alarm is upgraded to Major if the error is not resolved in six hours.

b. Determine the carrier (a or b) by the Port field in the Error or Alarm Log. For SPE-SELEC, the Port field is 1A (**test duplication interface a**) or 1B (**test duplication interface b**).

System Technician-Demanded Tests: Descriptions and Error Codes

Always investigate tests in the order presented in the table below. By clearing error codes associated with the *Duplication Interface Circuit Pack Status Query Test,* for example, you may also clear errors generated from other tests in the testing sequence.

Table 10-574. System Technician-Demanded Tests: DUPINT

Order of Investigation	Short Test Sequence		Long Test Sequence		D/ND[1]
	Active	Standby	Active	Standby	
Duplication Interface Circuit Pack Status Query Test (#315)	X	X	X	X	ND
Duplication Interface Circuit Pack Sanity Maze Test (#277)	X	X	X	X	ND

Continued on next page

Table 10-574. System Technician-Demanded Tests: DUPINT — *Continued*

Order of Investigation	Short Test Sequence		Long Test Sequence		D/ND[1]
	Active	Standby	Active	Standby	
Duplication Interface Circuit Pack SPE A Loop Back Test (#275)	X	X	X	X	ND
Duplication Interface Circuit Pack SPE B Loop Back Test (#276)	X	X	X	X	ND
Duplication Interface Circuit Pack Administration Terminal Loop Back Test (#274)(a)	X	X	X	X	ND
Inter-Duplication Interface Circuit Pack Loop Back Test (#280)	X	X	X	X	ND
Duplication Interface Circuit Pack Background Test Query Test (#271)	X	X	X	X	ND
Duplication Interface Circuit Pack Invalid Message Query Test (#272)	X	X	X	X	ND
Common Shadow Circuit Fiber Cable Present Test (#1289) (b)	X	X	X	X	ND
Common Shadow Circuit M-BUS Time-out Query Test (#285) (b)			X	X	ND
Common Shadow Circuit Loop Back Test (#283) (b)		X		X	ND
Common Shadow Circuit Address Decoder Test (#284) (b)		X		X	ND
SPE Select Switch Query Test (#278)	X	X	X	X	ND

1 D = Destructive, ND = Non-destructive

Notes:

a. Refer to the DUPINT (Duplication Interface Circuit Pack) Maintenance documentation for description of this test.

b. Refer to the SHDW-CIR (Common Shadow Circuit) Maintenance documentation for description of this test.

SPE Select Query Test (#278)

This test queries the Duplication Interface circuit pack for the state of SPE Select Switch. The test passes if the switch is in the AUTO position. The test fails if the switch is not in the AUTO position or if the Duplication Interface circuit pack is not present.

Table 10-575. TEST #278 SPE Select Query Test

Error Code	Test Result	Description/Recommendation
1000	ABORT	System resources required to run this test are not available.
2000	ABORT	Response to the test request was not received within the allowable time period.
2033	ABORT	Internal system error 1. Retry the command at 1-minute intervals a maximum of 5 times.
1	FAIL	The switch currently selects SPE-A active.
2	FAIL	The switch currently selects SPE-B active. 1. Move the switch to the AUTO position. 2. Rerun the test.
3	FAIL	The Duplication Interface circuit pack is not present or not functioning. 1. Resolve all alarms logged against the Duplication Interface circuit pack (DUPINT). 2. Rerun the test.
	PASS	The Duplication Interface circuit pack has reported that the SPE Select Switch is in the AUTO position. 1. If a visual inspection shows the SPE Select Switch is not in the AUTO position, then resolve all alarms logged against Duplication Interface circuit pack (DUPINT). 2. Repeat the test. 3. If Duplication Interface circuit pack B is being tested and a visual inspection shows that the switch is not in the normal position, Duplication Interface circuit pack A may be incorrectly reporting the state of SPE-Select Switch B. Replace Duplication Interface circuit pack A, and rerun the test.

SRP-EPN

MO Name in Alarm Log	Alarm Level	Full Name of MO
SRP-EPN	MAJOR	SRP-EPN

The Survivable Remote Expansion Port Network (SREPN) provides EPN service to the customer when the link to the main processor fails or is broken, or when the processor or center stage fails. SREPN is a disaster recovery operation rather than an additional reliability option.

Due to the hardware solution for Survivable Remote Processor (SRP), maintenance tests to make sure the SRP can go into “survive” mode are not possible.

When the `Survivable Remote Processor` field on the **system-parameters customer-options** form is set to `y`, then the following alarming strategy is used:

1. When the SRP is not in control of the SREPN (which is the normal state), then all alarms associated with the SREPN are downgraded to WARNING alarms. These include the EXP-INTF in the SRP, the EXP-LINK between the SRP and the SREPN, and all maintenance components in the SREPN.
2. When the SRP is in control of the the SREPN (the EXP-LINK is up between the SRP and SREPN), the disaster recovery state is in effect. A MAJOR alarm is raised against the SRP-EPN maintenance object. All other maintenance objects use their normal alarm strategies.

If the G3r PPN loses control (connectivity) to a SREPN, and the SRP associated with the SREPN does not raise a MAJOR alarm against the SRP-EPN maintenance object, then the disaster recovery mechanism is **NOT** working.

There are no tests associated with the SRP-EPN maintenance object. The only way to resolve the SRP-EPN alarm is to fix the connectivity problem(s) between the G3r PPN and the SREPN.

STBY-SPE (Standby SPE)

MO Name (in Alarm Log)	Alarm Level	Initial Command to Run	Full Name of MO
STBY-SPE	WARNING	status system 1	Standby SPE
STBY-SPE	MAJOR	test spe-standby	Standby SPE

A high or critical reliability system contains two switch processing elements (SPEs). The first such element is known as the Active SPE. The Active SPE is currently responsible for all call processing, administration, and maintenance activities that are being performed by the system. The other SPE is known as the Standby SPE. The Standby SPE becomes the Active SPE whenever the current Active SPE fails. The Standby SPE does not perform call processing or administration activities. However, it does perform maintenance activities, but these activities are carried out completely under the direction of the Active SPE in order to monitor and maintain the health of the Standby SPE.

NOTE:
Verify that the Standby SPE is functional (no duplication alarms exist and the SPE has returned to the Standby Mode) by running the **status system 1** command. If the standby SPE is in the maint/idle mode with no standby alarms, use the **standby refresh** command to put the standby SPE into the standby mode. Verify the results by using the **status system 1** command.

The Standby SPE is always in one of three modes: Standby, Maintenance, or Down. Usually, the Standby SPE is in Standby Mode. In this mode,

1. The Switch Control (SW-CTL) on the Standby SPE Network Control circuit pack is isolated from the TDM Bus so that it does not interfere with attempts by the Switch Control on the Active SPE Network Control circuit pack to control the TDM Bus
2. The Standby SPE (PKT-CTRL) Packet Control circuit pack is isolated from the Packet Bus to prevent interference with the activity on the Active SPE Packet Control circuit pack
3. The Standby SPE (PROCR) Processor is held in a reset state so that it does not run software
4. The 12-Volt power supply on the Standby SPE Network Control circuit pack (TN777B) can not be turned on when the Standby SPE Processor is held in the reset state
5. Standby SPE Memory (MEMORY in a 386) is shadowed from Active SPE Memory. This means that Standby SPE Memory is updated to reflect every change in Active SPE Memory (for example, calls and administration changes).

In certain circumstances, the Standby SPE is put into Maintenance Mode by the Active SPE. In this mode, the SW-CTL and PKT-CTRL on the Standby SPE are still isolated from the TDM Bus and Packet Bus, memory shadowing is disabled, and its processor is no longer held in a reset state. Data Channels on the standby SPE Network Control circuit pack can access the TDM bus, and the maintenance testing can be executed in this maintenance mode. The 12 volt power supply on the standby SPE Network Control circuit pack can also be turned on for Memory Card maintenance testing. In Maintenance Mode, the Standby SPE accepts maintenance activity requests from the Active SPE to perform testing on Standby SPE components. For many of the requested activities, maintenance software on the Standby SPE is restarted in order to conduct the activity. Translation saves and announcement saves may be performed on the Standby SPE when it is in Maintenance Mode. While in Maintenance Mode, the Standby SPE is not as readily available to assume the role of the Active SPE, but it may do so depending upon the severity of the Active SPE fault(s).

Whenever the Standby SPE is returned to Standby Mode from Maintenance Mode, its DRAM Memory is refreshed. This means that the Active SPE DRAM Memory is shadowed over to Standby SPE DRAM Memory. The flash ROM memory in the Standby SPE is not refreshed, and the shadowing circuit cannot write data into the flash ROM memory. The refresh is necessary because, while in Maintenance Mode, memory shadowing to the Standby SPE is disabled and Standby SPE Memory is not updated to reflect changes in Active SPE Memory. After the refresh, Standby SPE Memory once again is an up-to-date reflection of Active SPE Memory.

The Standby SPE goes into Down Mode whenever certain error conditions are detected. These error conditions are described in detail in the “Hardware Error Log Entries and Test to Clear Values” section. Once the error condition(s) that cause(s) the Standby SPE to go into Down Mode are corrected, the Standby SPE is first put into Maintenance Mode to conduct testing on Standby SPE components. It is then returned to Standby Mode.

The current mode of the Standby SPE can be determined by issuing the **status system** command.

Components in Standby SPE Complex

The Standby SPE maintenance object is actually a composite of all the circuit packs in the Standby SPE.

The TN778 Packet Control circuit pack, the TN765 Processor Interface circuit pack(s), and the TN772 Duplication Interface circuit pack are used.

WARNING:
Verify that there is an identical set of SPE complex circuit packs in each SPE. For example, there should be the same number of Memory circuit pack(s) in each SPE. If there are Processor Interface circuit pack(s) (one or two) in the Active SPE, the same number of PI circuit packs must be present in the Standby SPE. If one SPE has a Packet Control Circuit Pack, the other SPE must also have one. If the set of circuit packs in each SPE is not identical, alarms could result against the STBY-SPE, DUPINT, SHDW-CIR, PI-BD, PKT-CTRL, PROCR, MEM-BD and MEMORY maintenance objects.

The accessing and testing of the Standby SPE may be affected by the health of the circuit packs through which the Active SPE communicates with the Standby SPE. These circuit packs include the Active SPE Processor circuit pack, the Duplication Interface circuit pack in the A carrier, and the Standby SPE Processor circuit pack. Additionally, the Inter-Carrier Cable (ICC) and the backplane affect the ability of the Active SPE to communicate with the Standby SPE. The ability to shadow Active SPE memory into Standby SPE memory is affected by the Duplication Interface circuit pack in the A carrier, the Duplication Interface circuit pack in the B carrier, and the Memory circuit pack(s) in the Standby SPE. Additionally, the Active SPE Memory Bus, the ICC, backplane, and the Standby SPE Memory Bus affect the ability to correctly shadow Active SPE memory into Standby SPE memory.

These dependencies for the TN2404/TN790 are shown in Figure 10-89 on page 10-1520, which depicts the interconnection between the two SPEs of a High or Critical Reliability system. The following circuit pack abbreviations are used in Figure 10-89 on page 10-1520:

- DUPINT for Duplication Interface circuit pack
- PI for Processor Interface
- Net Pkt for Network Controller/Packet Interface

The dashed lines in the figure represent important logical connections between components.

Refer to the DUPINT, SHDW-CIR, MEM-BD, MEMORY, PROCR, PR-MAINT, TDM-BUS, PKT-BUS, TDM-CLK, PI-BD, PI-SCI, PKT-CTRL, SW-CTL, DATA-CHL, CARD-MEM and STBY-SPE for descriptions of the individual components.

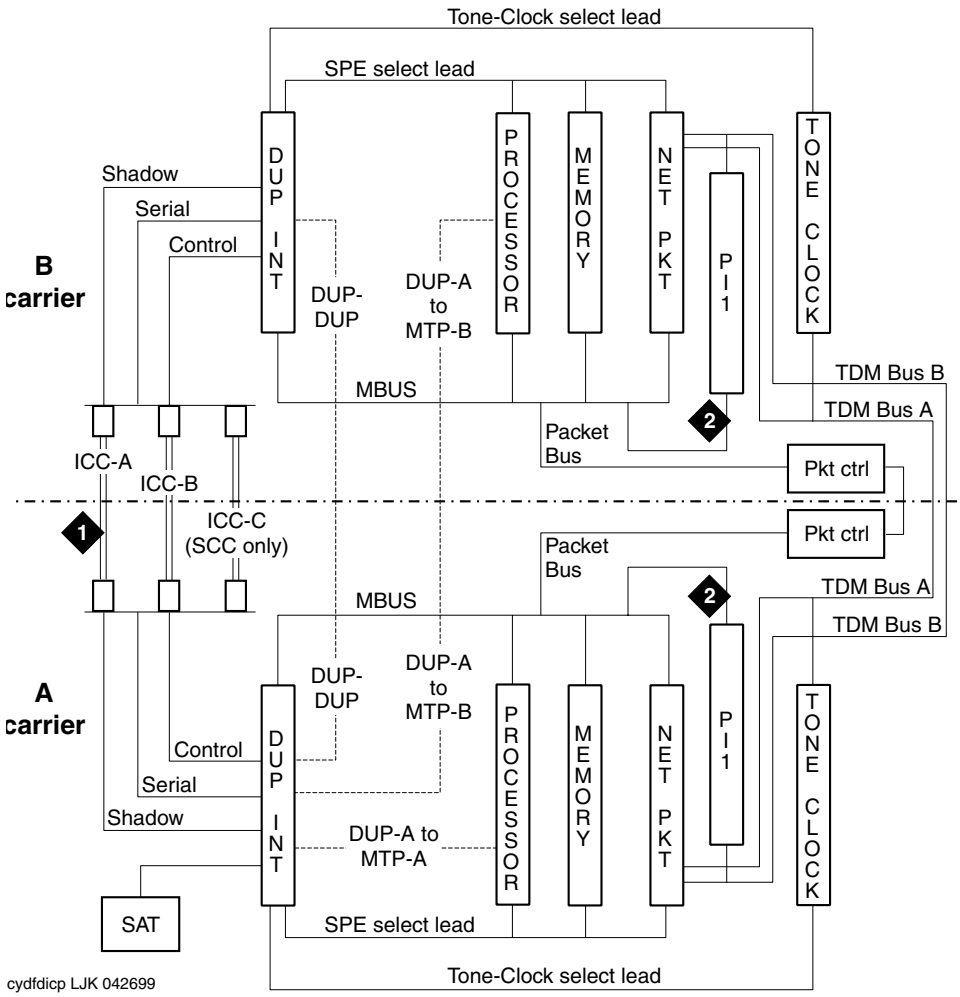

Figure Notes:

1. Fiber optic connection (front of TN792)
2. Processor Interface circuit pack

Figure 10-89. STBY-SPE interactions

Error Log Entries and Test to Clear Values

Table 10-576. Standby SPE Error Log Entries

Error Type	Aux Data	Associated Test	Alarm Level	On/Off Board	Test to Clear Value
0[1]	0	Any	Any	Any	test spe-standby l See note (n).
1(a)	0 2014 2016 2017 2022 2024 2025	Inability to Do Standby SPE Maintenance Activity	MAJOR	ON	test spe-standby sh See note (n).
18	any	Standby SPE busied out	WNG	OFF	release spe-standby
58 (b)	Any	Standby SPE in Down Mode			test processor [[0]1] a | b sh See note (n).
67 (c)	Any	Memory Shadowing Link Failure Detected			test shadow-link See note (n).
80 (d)	Any	Handshake Loss With Carrier A Dupint			test duplication-interface a sh test duplication-interface b sh See note (n).
81 (e)	Any	Handshake Loss With Standby SPE Processor			test duplication-interface a sh test duplication-interface b sh See note (n).
8 (f)	Any	Handshake Loss Between Dupints			test duplication-interface a sh test duplication-interface b sh See note (n).
85 (g)	Any	Timeouts Detected While Shadowing			test duplication-interface a l test duplication-interface b l See note (n).
98 (h)	Any	Active SPEMTP DPR Failure Detected			test processor [[0]1] a | b sh See note (n).
99 (i)	Any	Active SPEMTP Insanity Detected			test processor [[0]1] a | b sh See note (n).
106 (j)	Any	Standby SPE Memory Failure Detected			test memory [[0]1] a | b l See note (n).
139	Any	See note (k).			See note (k).
149 (l)	any	See note (l).			refresh spe-standby See note (n)

Continued on next page

Table 10-576. Standby SPE Error Log Entries — *Continued*

Error Type	Aux Data	Associated Test	Alarm Level	On/Off Board	Test to Clear Value
257 (n)	0 2014 2015 2017 2021 2024 2048 2049 2050 2051 2054 2337	Standby SPE Not Put Into Standby Mode	MAJOR	ON	refresh spe-standby (See note (n).
801 (o)	any	No response from Standby SPE after upgrade	MAJOR	ON	upgrade software
802 (p)	any	Checksum on Standby SPE failed after upgrade	MAJOR	ON	upgrade software
803 (q)	any	No translation card-mem inserted after Standby SPE upgrade	MAJOR	OFF	upgrade software
804 (r)	any	Lost communication with Standby SPE during reboot following upgrade	MAJOR	ON	upgrade software
805 (s)	any	No software mem-card inserted in active SPE	MAJOR	OFF	upgrade software
806 (t)	any	Checksum on new Standby SPE failed	MAJOR	ON	upgrade software
807 (u)	any	No translation mem-card inserted in new Standby SPE	MAJOR	OFF	
808 (v)	any	Lost communication with new Standby SPE	MAJOR	ON	upgrade software
809 (w)	any	Failed to perform SPE-interchange	MAJOR	OFF	upgrade software
810 (x)	any	Bad checksum on software mem-card	MAJOR	OFF	upgrade software

Continued on next page

Table 10-576. Standby SPE Error Log Entries — *Continued*

Error Type	Aux Data	Associated Test	Alarm Level	On/Off Board	Test to Clear Value
812 (y)	any	SPE interchanged forced with health-override option:	WRNG	OFF	See note (y).
822(z)	any	A non-hot interchange to the standby SPE occurred.			See note (z).
826 (aa)	any	Standby software mismatch	MAJOR	ON	upgrade software

1 Run the short test sequence first. If all the tests pass, run the long test sequence. Refer to the appropriate test description and follow the recommended procedures.

NOTE:
When more than one of the above error types exists at the same time, the alarm against the Standby SPE is cleared only when (1) any problems described by the Aux Data values for Error Types 1 and 257 are resolved **and** (2) all problems described in (b) through (o) are resolved.

Notes:

a. Aux Data value 0 is equivalent to Aux Data value 2017. All Aux Data values listed for Error Type 1 are described in “System Technician-Demanded Tests: Test Result Error Codes”. These values are shared between Standby SPE maintenance activity results and the test results for the System Technician commands on Standby SPE components because the values represent the common set of problems that can be encountered when attempting to conduct any form of maintenance activity on the Standby SPE.

b. Error Type 58 is logged when the Duplication Interface circuit pack in the A carrier reports that the Standby SPE has gone into Down Mode. This implies an inability to communicate with the Standby SPE.

   The ability to communicate with the Standby SPE should be checked by issuing the **test processor a | b short** command, where “a | b” indicates the carrier that contains the Standby SPE. If all of the tests execute such that no test returns an Aux Data value of 2014, 2015, 2016, 2017, 2022, 2024, or 2025, the Standby SPE was successfully put into Maintenance Mode. This indicates that the communication path between the Active SPE and the Standby SPE may be functional. However, to restore the functionality of the communication path, look for the presence of Error Types 80, 81, and 106 and use the recommended commands to clear these errors.

c. Error Type 67 is logged when the Shadow Link Test (#318) fails. This implies that the shadowing mechanism is not functioning.

   The functionality of the Memory Shadowing Link should be checked by issuing the **test shadow-link** command. If the test passes, the memory shadowing mechanism may be functional. However, to restore the memory shadowing, look for the presence of Error Types 82, 85, and 106 and use the recommended commands to clear these errors.

d. Error Type 80 is logged when the Active SPE Maintenance/Tape Processor reports that the handshake that is maintained between the processor and the Duplication Interface circuit pack in the A carrier has been lost. This implies an inability to communicate with the Standby SPE.

   The status of the handshakes should be checked by issuing the **test duplication-interface a** and the **test duplication-interface b** commands. These commands initiate background tests that verify whether the handshake between Dupint-A and Active-MTP is operational.

   If the handshake between Dupint-A and Active-MTP is operational, the communication path between the Active SPE and the Standby SPE may be functional. However, to restore the communication path, look for the presence of Error Types 58, 81, 82, 98, 99, and 106 and use the recommended commands to clear these errors.

e. Error Type 81 is logged when the Duplication Interface circuit pack in the A carrier reports that the handshake that is maintained between the circuit pack and the Maintenance/Tape Processor on the Standby SPE has been lost. This implies an inability to communicate with the Standby SPE.

   The status of the handshakes should be checked by issuing the **test duplication-interface a** and the **test duplication-interface b** commands. These commands initiate background tests that verify whether the handshake between Dupint-A and Standby-MTP is operational.

   If the handshake between Dupint-A and Standby-MTP is operational, the communication path between the Active SPE and the Standby SPE may be functional. However, to restore the communication path, look for the presence of Error Types 58, 80, 82, 98, 99, and 106 and use the recommended commands to clear these errors.

f. Error Type 82 is logged when the Duplication Interface circuit pack in the A carrier reports that the handshake that is maintained between the circuit pack and the Duplication Interface circuit pack in carrier B has been lost. This implies that the shadowing mechanism is not functioning.

The status of the handshakes should be checked by issuing the **test duplication-interface a** and the **test duplication-interface b** commands. These commands initiate background tests that verify whether the handshake between Dupint-A and Dupint-B is operational. If the handshake between Dupint-A and Dupint-B is operational, the memory shadowing mechanism may be functional. However, to restore the memory shadowing, look for the presence of Error Types 67, 85, and 106 and use the recommended commands to clear these errors.

NOTE:
Because the handshake between Dupint-A and Dupint-B is tested in the background, the test results from executing the **test duplication-interface a** command do not indicate their current status. However, if the background testing determines that all three handshakes (that is, Dupint-A to Dupint-B, Dupint-A to Active-MTP, and Dupint-A to Standby-MTP) have become operational, and if there are no other current STBY-SPE errors, Error Types 80, 81, and 82 and the associated STBY-SPE alarm will be cleared in about 30 minutes.

g. Error Type 85 is logged when the Duplication Interface circuit pack detects that writes made to the Standby SPE Memory are not being acknowledged. This implies that the shadowing mechanism is not functioning.

   The presence of time-outs when shadowing to the Standby SPE Memory should be checked by issuing the **test duplication-interface a long** command. This command runs a test that forces memory writes to the Standby SPE Memory and detects time-outs waiting for acknowledgments. If time-outs are not detected, memory shadowing may be functional. However, to restore the functionality of memory shadowing, look for the presence of Error Types 67, 82, and 106 and use the recommended commands to clear these errors.

h. Error Type 98 is logged when the Active SPEMTP Dual Port RAM Test (#104) fails. This implies an inability to communicate with the Active MTP.

   The ability to communicate with the Active MTP should be checked by issuing the **test processor a | b short** command, where “a | b” indicates the carrier that contains the Active SPE.

i. Error Type 99 is logged when the Active SPE detects that the handshake that is maintained between the Active SPE Processor and the Active SPE Maintenance/Tape Processor has been lost. This implies an inability to communicate with the Active MTP.

   The ability to communicate with the Active MTP should be checked by issuing the **test processor a | b short** command, where “a | b” indicates the carrier that contains the Active SPE.

j. Error Type 106 is logged when the Standby SPE Memory Functional Test (#332) fails. This implies an inability to communicate with the Standby SPE and also that the shadowing mechanism is not functioning.

   The functionality of the Standby SPE Memory should be checked by issuing the **test memory a | b long** command, where “a | b” indicates the carrier that contains the Standby SPE. This command runs the Memory Functional Test. If the test passes, the communication path between the Active SPE and the Standby SPE may be functional. However, to restore the functionality of the communication path, look for the presence of Error Types 58, 80, 81, 98, and 99 and use the recommended commands to resolve these errors.

   Additionally, if the Memory Functional Test passes, the memory shadowing mechanism may be functional. However, to restore the functionality of memory shadowing, look for the presence of Error Types 67, 82, and 85 and use the recommended commands to resolve these errors.

k. If Error Type 139 is present, this error type takes precedence over all other error types until it is resolved. This error type indicates an incompatibility between the two Processor circuit packs in a High or Critical Reliability system. For a High or Critical Reliability system to work, the two Processor circuit packs must function together so that the circuit packs can perform interchanges between themselves.

   Use the following procedure to resolve this error:

   1. Set the SPE-Select switches one at a time to select the Active SPE. This also forces the Tone-Clock in this SPE to become active.
   2. If the active SPE is the B carrier, issue the **test duplication-interface a long** command.
   3. Execute the **test spe-standby long** command.
   4. Use the **display error** command with the “dup-spe” category to see if the Error Code 139 recurred. If the error did not recur, and if all STBY-SPE tests have passed, the system is functioning normally.
   5. Restore the SPE-Select switches to normal.
   6. If Error Code 139 still exists (and if the STBY-SPE tests have failed), one of the Processor circuit packs must be replaced. The system will function normally, but it will not be able to interchange properly to the Standby SPE without service disruption. Replacing the Standby processor is the best solution to this problem. However, the processor must be replaced with one of a vintage that is compatible with the current Active Processor.

However, if it is found that the Active processor must be replaced (for example, the Standby processor is of a newer vintage), the repair strategy is more complex. Use the following procedure to replace the Active Processor circuit pack:

NOTE:
Replacing the Active Processor circuit pack will disrupt service. Schedule this procedure at the customer's convenience.

1. Set the SPE-Select switches one at a time to select the Standby SPE. An SPE-interchange with a reset level of 3 or 4 results.
2. Replace the new Standby (and former Active) SPE Processor circuit pack with a circuit pack of the appropriate vintage.
3. Issue the **test spe-standby long** command. Use the **display error** command with the "dup-spe" category to verify that all tests pass and that Error Type 139 does not recur.
4. Restore the SPE-Select switches to their normal position.

l. Error Type 149 occurs when the Standby SPE goes into down mode during system technician demanded testing. Wait three minutes, then look for other STBY-SPE errors and follow the procedures described for these errors.

m. Aux Data value 0 is equivalent to Aux Data value 2017. Aux Data values 2014, 2015, 2017, 2021, 2024, and 2051 for Error Type 257 are described in the "System Technician-Demanded Tests: Test Result Error Codes". The Aux Data values 2048, 2049, and 2050 for Error Type 257 are described in SHDW-LNK (Memory Shadowing Link) Maintenance documentation. These values are shared between Standby SPE maintenance activity results and the test results for System Technician commands on Standby SPE components because the values represent the common set of problems that can be encountered when attempting to conduct any form of maintenance activity on the Standby SPE.

Error Type 257 with an Aux Data value of 2051 and a Major alarm results when, in attempting to refresh the Standby SPE, it is determined that software cannot communicate with the Duplication Interface circuit pack in the A carrier. This implies that the shadowing mechanism is not functioning. This error type is accompanied by Error Type 80.

Error Type 257 with an Aux Data value of 2051 and no alarm results when, in attempting to refresh the Standby SPE, it is determined that software cannot communicate with the Duplication Interface circuit pack in the B carrier. This does not necessarily imply that the shadowing mechanism is not functioning, but it **is** possible that it is not functioning. This error type is accompanied by Error Type 82. However, Error Type 82 may not be logged until sometime later.

n. After issuing the specified command(s) to clear this alarm, perform the following procedure to clear the STBY-SPE alarm:

   1. If all the tests pass or abort, issue a **refresh spe-standby** command. If the refresh is successful, wait 1 minute and then check for alarms against STBY-SPE. If the refresh was not successful, or if there are still alarms against STBY-SPE, continue attempts to resolve other STBY-SPE error types. The **busyout spe-standby** and **release spe-standby** commands may also be used to clear out STBY-SPE alarms. After entering the **busyout spe-standby** command followed by the **release spe-standby** command, all STBY-SPE alarms are retired and, 1 minute later, the equivalent of scheduled maintenance is run on the standby SPE. Note that the **busyout spe-standby** and **release spe-standby** commands do not affect alarms on other Maintenance Objects in the standby processor complex.

   2. If some of the tests fail, refer to the appropriate MO section and follow the procedures described there.

   The following table summarizes the error types that may affect the functionalities of the Communication Path to the Standby SPE and of Memory Shadowing. To restore the function, all error types that may affect the function must be investigated and resolved by following the recommended commands or procedures.

Function Affected	Error Types
Communication Path To Standby SPE	58, 80, 81, 98, 99, 106, 1 with Aux Data values 2016, 2017, 2022, 2024, or 2025; 139 with Aux Data value 2015.
Memory Shadowing	67, 82, 85, 106, 257 with Aux Data values 2014, 2015, 2021, 2024, 2048, 2049, 2050, 2051, or 2337.

o. Error Type 801 is logged when the **upgrade software** command failed due to the loss of communication with the Standby SPE during the upgrade. This implies that the software reprogramming of the Standby SPE never completed.

   The **upgrade software** command should be re-executed. If it fails again, the Standby SPE Processor circuit pack should be replaced.

p. Error Type 802 is logged when the **upgrade software** command failed due to the bad flash checksum on the Standby SPE after the completion of the upgrade. This implies that the on-board flash memory may not be functional. The Standby SPE is running the new software while the Active SPE is still running the old software. However, due to the bad flash checksum, the behavior of the Standby SPE may be unpredictable.

   The **upgrade software** command should be re-executed. If the command fails again, the Standby SPE Processor circuit pack should be replaced.

q. Error Type 803 is logged when the **upgrade software** command failed due to the failure to insert the translation card-mem into the Standby SPE in time during the reboot immediately following a successful upgrade. This implies that the Standby SPE is running the new software while the Active SPE is still running the old software.

   The translation card-mem should be inserted into the Standby SPE at the appropriate time so as to allow the **upgrade software** command to be re-executed.

r. Error Type 804 is logged when the **upgrade software** command failed due to a loss of communication with the Standby SPE during the reboot immediately following a successful software upgrade. This implies that the communication path between the Active SPE and the Standby SPE may not be functional.

   Issue the **test duplication-interface a** and the **test duplication-interface b** commands. If the tests pass, re-execute the **upgrade software** command.

s. Error Type 805 is logged when the **upgrade software** command failed due to the failure to insert the software card-mem in the Active SPE in time.

   The software card-mem should be inserted into the Active SPE at the appropriate time so as to allow the **upgrade software** command to be re-executed.

t. Error Type 806 is logged when the **upgrade software** command failed due to a bad flash checksum on the new Standby SPE after an upgrade of the old Standby SPE and SPE-Interchange. This implies that the on-board flash memory may not be functional. The behavior of the Standby SPE may unpredictable.

   The **upgrade software** command should be re-executed. If the command fails again, the Standby SPE Processor circuit pack should be replaced.

u. Error Type 807 is logged when the **upgrade software** command failed due to the failure to insert the translation card-mem into the new Standby SPE after an upgrade of the old standby SPE and SPE-Interchange.

   The translation card-mem should be inserted into the Standby SPE.

v. Error Type 808 is logged when the **upgrade software** command failed due to the loss of communication with the new Standby SPE during an upgrade following the upgrade of the old standby SPE and SPE-Interchange. This implies that the programming of the Standby SPE never completed.

   Use the “Special Upgrade Procedure” to re-execute an upgrade on the Standby SPE only. If the upgrade fails again, the Standby SPE Processor circuit pack should be replaced.

w. Error Type 809 is logged when the **upgrade software** command failed due to the failure to perform an SPE-Interchange immediately after the successful upgrade of the Standby SPE. This implies possible problems with the Dupint circuit packs.

   Issue the **test duplication-interface a** and **test duplication-interface b** commands. If the tests pass, re-execute the **upgrade software** command.

x. Error Type 810 is logged when the **upgrade software** command failed due to a bad checksum on the software card-mem during the upgrade of the new Standby SPE following the successful upgrade of the old Standby SPE and of SPE-Interchange.

   The software card-mem should be replaced by one that has a good checksum. The **upgrade software** command should be re-executed.

y. Whenever an SPE interchange is forced by using the **health-override** option as part of the **reset system interchange** command, a WARNING OFF circuit pack STBY-SPE alarm is raised, and the Fault Severity Level (FSL) of the new standby SPE is raised to its highest possible value to prevent an SPE interchange back to the original active SPE. This artificial FSL lasts one hour or until a **busyout spe-standby** command is executed, followed by a **release spe-standby** command. After this time, the FSL of the two SPEs are recomputed, and the healthiest SPE becomes or remains active.

z. The system interchanged from the active SPE to the standby SPE with a restart that is more disruptive to service than the normal system hot start. The switches were not used to force this interchange. The level of restart can be observed by using the **display initcauses** command. Look for other alarms on the standby SPE that possibly caused this interchange. Also see “Reset System Interchange (High or Critical Reliability Systems Only)” in Chapter 4, ‘‘Initialization and Recovery’’.

aa. The software vintage in the Standby SPE does not match the software vintage in the active SPE.

   The **upgrade software** command should be executed for the standby SPE as described in Chapter 5, ‘‘Routine Maintenance Procedures’’.

System Technician-Demanded Tests

The following commands can be used to test and manipulate part or all of the standby SPE:

- **busyout spe-standby**

  The **busyout spe-standby** command is used to stop all standby maintenance activity, disable shadowing, and hold the standby processor reset. A warning off circuit pack alarm is also raised against STBY-SPE MO. This command is more powerful than the **refresh spe-standby** command because it preempts the standby and enters maintenance mode, where as the **refresh spe-standby** does not do this.

- **release spe-standby**

  The **release spe-standby** command is used to remove the busyout condition, restore memory shadowing, and force a refresh. 1 minute after the command is executed, the equivalent of standby scheduled maintenance is run.

- **refresh spe-standby**

  The **refresh spe-standby** command is used to put the Standby SPE immediately into Standby Mode. The command conducts the same activities regardless of whether the Standby SPE is already in Standby Mode or whether it is in Maintenance Mode. Whenever this command is issued, any Standby SPE maintenance activity currently in progress (except for entering maintenance mode) is preempted, the Standby SPE Processor is held reset, and the Standby SPE's memory is refreshed. Recall that the refresh is necessary because, while the Standby SPE is in Maintenance Mode, memory shadowing is disabled. When the Standby SPE is returned to Standby Mode, its memory must be brought up-to-date with Active SPE memory.

  Because they can preempt Standby SPE maintenance activities, the **refresh spe-standby** and **busyout spe-standby** commands should be used judiciously. If the Standby SPE is in Maintenance Mode when one of these commands is issued, the current maintenance activity being conducted by the Standby SPE is immediately terminated with the following potential side-effects:

  - Testing of the Standby SPE components that are the target of the maintenance activity may not have completed. Depending on the maintenance activity and the point at which such activity is terminated, tests that detect faults and/or lack of faults on those Standby SPE components may not have had the opportunity to run. Accordingly, alarms will not be raised or retired on the components.

- If the maintenance activity is Scheduled Maintenance, and if the **refresh spe-standby** or **busyout spe-standby** command is issued before a scheduled translation save is performed, the translation save is not completed, and the translation data on both the Active SPE and Standby SPE and on the memory cards do not reflect the changes made since the last translation save.

In general, after a **refresh spe-standby** has been used, and after the user has finished working with the system, the **test spe-standby long** command should be issued in the event that the **refresh spe-standby** command preempted a Standby SPE maintenance activity. Testing the standby SPE allows standby maintenance to re-determine the health of the standby SPE and to compare this health to that of the active SPE. This testing could result in an SPE interchange to a healthier SPE.

If the **busyout spe-standby** command has been used, the **release spe-standby** command should also be used. The latter command fully tests the standby SPE 1 minute later.

Also, if the **refresh spe-standby** or **busyout spe-standby** command was used within the time frame that scheduled maintenance with a translation save was to have been conducted, the **save translation** command should be issued to ensure that the current translation data has been written to the Active SPE and Standby SPE tapes.

When using the **refresh spe-standby** to preempt Standby SPE maintenance activities, it may be necessary to issue the **refresh spe-standby** command multiple times in order to preempt all Standby SPE maintenance activity. If the **refresh spe-standby** command successfully completes 5 times without the Standby SPE becoming labeled “standby” on the **status system** form, wait 20 minutes. This does not include cases where the command completes with the terminal message line errors “Refresh not successful; use ‘display errors’ to check for STBY-SPE errors” or “Cannot interrupt Standby SPE while entering maintenance mode; please try later”. Issue the **refresh spe-standby** command once more. If the Standby SPE is not labeled “standby” on the status system form after this attempt, use the **busyout spe-standby** command.

- **reset spe-standby <level>**

  Normally, when the standby is brought into maintenance mode, it is done so with a Warm Restart. The **reset spe-standby** command can be used to bring the standby SPE from standby mode into maintenance mode with the requested restart level.

- **reset system-interchange <health-override>**

  If the health-override option is NOT specified, and if the standby Fault Severity Level (FSL) is less than or equal to that of the active SPE, and if the standby SPE is in standby mode, the interchange is allowed. Actually, if the standby FSL is less than that of the active FSL, the system does its own interchange in due time. If the FSL of the standby SPE is higher than that of the active SPE, but the alarmed standby maintenance objects do not affect the ability of the standby SPE to be put into standby mode, the command is rejected. This indicates that the health-override option can be used. If there are problems that would prevent the standby SPE from running system software, the command is rejected outright.

  If the health-override option is specified, and if the standby SPE is in standby mode, a Hot interchange is performed, regardless of the FSL level of the two SPEs. Once the interchange is performed, if the new active FSL is higher than the standby FSL, a STBY-SPE warning alarm is raised against the new standby SPE. This indicates that the system was forced to switch SPEs and is currently being held on the active SPE artificially. This prevents a SPE interchange back to the original active SPE. This STBY-SPE warning alarm lasts for one hour. After this time passes, system switches to the SPE with the lowest FSL.

  The STBY-SPE alarm is also retired if there is some indication of system technician testing of the standby SPE before the one hour expires. The assumption here is that a system technician person is present because the health-override option was used. Therefore, if there is some indication that repair work is going on, the alarm generated by the health-override should be retired. The following are indications of system technician testing being done: the standby SPE is busied out and then released, the active SPE is hard selected via the switches, or a **test spe-standby long** command is performed.

- **test processor [1] a|b [short | long]**

  Runs the same set of tests on the standby SPE as on the Active SPE. Refer to the PROCR-BD and PR-MAINT sections for a complete list of the tests that are run.

- **test memory [1] a|b [short | long]**

  For this command, there is one additional test for the Standby SPE Memory circuit pack: the Memory Functional Test #332. Refer to the MEM-BD section for a complete list of the tests that are run.

- **test data-module <extension>**

  Runs the same set of tests on the standby SPE as on the Active SPE. Refer to the DATA-CHL section for a complete list of the tests that are run.

- **test network-control [[0]1] a|b [short | long]**

  Runs the same set of tests on the standby SPE as on the Active SPE. Refer to the SW-CTL, DATA-BD, DATA-CHL, and CARD-MEM sections for a complete list of the tests that are run.

- **test card-mem [[0]1] a|b [short | long]**

  Runs the same set of tests on the standby SPE as on the Active SPE. Refer to the CARD-MEM section for a complete list of the tests that are run.

- **test packet-control [[0]1] a|b [short | long]**

  For **test packet-control**, the most significant difference between testing the Active Packet Control versus the Standby Packet Control is that the Reset Test (#586) runs on the Standby SPE Packet Control circuit pack. Also, the short and long options cause the identical set of tests to run. Refer to the PKT-CTRL section for a complete list of the tests that are run.

- **test interface [[0]1] a1 | a2 | b1 | b2 [short | long]**

  For this command, there is a single test for the Standby SPE Processor Interface circuit pack(s) and a single test for each Processor Interface Port on a Processor Interface circuit pack. These tests are different from the tests that are run for the corresponding Active SPE Processor Interface circuit pack(s) and Processor Interface Port(s). Refer to the PI-PT section for a complete list of the tests that are run.

- **test duplication-interface [0[1] a|b [short | long]**

  Runs the same set of tests on the standby SPE as on the Active SPE. Refer to the DUPINT section for a complete list of the tests that are run.

- **test spe-standby [short | long]**

  The **test spe-standby [short | long]** command results in the execution of all tests that would be run if each of the previous commands in this list was executed individually. Because of the number of tests that it runs, **test spe-standby [short | long]** takes from 10 to 30 minutes to complete.

  The Short and Long Test Sequences for **test spe-standby** are listed on the following pages. Refer to the appropriate maintenance section for a complete description of each of the tests.

Table 10-577. Test Sequence of Test SPE-Standby

Test Number	Name of Test and Associated MO	Short Test Sequence	Long Test Sequence
332	Memory Functional Test		X
318	Shadow Link Test (SHDW-LNK)		X
1289	Common Shadow Circuit Fiber Cable Present Test	X	X
285	Common Shadow Circuit MBUS Time-out Query (SHDW-CIR)		X
283	Common Shadow Circuit Loop Back Test (SHDW-CIR)	X	X
284	Common Shadow Circuit Address Decoder Test (SHDW-CIR)	X	X
278	SPE Select Switch Query (SPE-SELEC)	X	X
315	Duplication Interface Status Query (DUPINT)	X	X
275	Duplication Interface SPE A Loop Back Test (DUPINT)	X	X
276	Duplication Interface SPE B Loop Back Test (DUPINT)	X	X
280	Inter-Duplication Interface Loop Back Test (DUPINT)	X	X
271	Duplication Interface Background Test Query (DUPINT)	X	X
277	Duplication Interface Sanity Maze Test (DUPINT)	X	X
272	Duplication Interface Invalid Message Query (DUPINT)	X	X
274	Duplication Interface Manager I Loop Back Test (DUPINT)	X	X
85	Read All Memory Test		X
86	RAM Checksum Test		X
87	Memory Parity Test	X	
52	Control Channel Test (DATA-BD)	X	X
50	NPE Audit (DATA-BD)		X
For each administered Network Control Data Channel in the Standby SPE, the following DATA-CHL tests are run:			
107	Data Channel Reset (DATA-CHL)		X
108	Data Channel DPR Test (DATA-CHL)		X
109	Data Channel Maintenance Loop Around Test (DATA-CHL)	X	X
110	Data Channel Crosstalk Test (DATA-CHL)	X	X
111	Data Channel Loop Back Test (DATA-CHL)	X	X

Continued on next page

Table 10-577. Test Sequence of Test SPE-Standby — *Continued*

Test Number	Name of Test and Associated MO	Short Test Sequence	Long Test Sequence
93	Switch Control Reset Test (SW-CTL)		X
325	Destructive EPN Maintenance Board Interface Test (SW-CTL)		X
95	Time-of-Day Clock Test (SW-CTL)	X	X
92	Control Channel Interface Test (SW-CTL)	X	X
94	Control Channel Transmission Test (SW-CTL)	X	X
324	EPN Maintenance Board Interface Test (SW-CTL)	X	X
77	Processor Software Initiated Interrupt Test (PROCR)	X	X
80	Processor ROM Checksum Test (PROCR)	X	X
82	Processor Non-Maskable Interrupt Test (PROCR)	X	X
83	Processor Sanity Timer Test (PROCR)		X
102	MTP Outpulse Relay Test (PR-MAINT)	X	X
103	MTP Analog Loop Around Test (PR-MAINT)	X	X
106	MTP Sanity Handshake Test (PR-MAINT)	X	X
228	MTP Manager I Channel Loop Around Test (PR-MAINT)	X	X
229	MTP Auxiliary Channel Loop Around Test (PR-MAINT)	X	X
101	MTP Reset Test (PR-MAINT)		X
104	MTP Dual Port RAM Test (PR-MAINT)		X
The following Memory Card tests are executed:			
695	Cartridge Insertion Test (CARD-MEM)	X	X
696	Cartridge Format and Read Test (CARD-MEM)	X	X
697	Cartridge Match Test (CARD-MEM)	X	X
698	Cartridge Write-Protected Test (CARD-MEM)	X	X
699	Cartridge Directory Sanity Check and Recovery Test (CARD-MEM)	X	X
694	Cartridge Translation Data Integrity Test (CARD-MEM)		X
693	Cartridge Erase/Write/Read Test (CARD-MEM)		X
703	Flash Data Consistency Test (FL-DATA)		X
For each Processor Interface circuit pack in the Standby SPE, the following PI-BD tests are run:			
52	Control Channel Test (PI-BD)	X	X
50	NPE Audit (PI-BD)		X
423	Standby PI Board Test (PI-BD)	X	X

Continued on next page

Table 10-577. Test Sequence of Test SPE-Standby — *Continued*

Test Number	Name of Test and Associated MO	Short Test Sequence	Long Test Sequence
For each administered Processor Interface Port, the following test is run:			
404	Standby PI Port Test (PI-PT)	X	X
For a Packet Control circuit packet in the Standby SPE, the following three tests are run:			
586	Packet Control System Technician Reset Test (PKT-CTRL)	X	X
583	Packet Control Read and Clear Error Counter Test (PKT-CTRL)	X	X
585	Packet Control Loop Around Test (PKT-CTRL)	X	X

Tests on the Standby SPE

Although this subsection is not about the individual test commands listed previously, several useful facts about executing these commands for Standby SPE components are mentioned here. These facts also apply to the **test spe-standby [short | long]** command.

1. If the Standby SPE is in Standby Mode, execution of the listed test commands results in the Active SPE putting the Standby SPE into Maintenance Mode. Up to a two minute delay may be observed before the first test in the sequence is run and its test results are displayed on the terminal. Each subsequent test in the sequence takes from 10 to 60 seconds to run, except for the CARD-MEM Erase/Write/Read test #693, which takes one to five minutes to run.
2. The **test memory [[0]1] a | b long** command is an exception to the first item. The first test in the sequence is the Memory Functional Test (#332) which takes from 30 seconds to two minutes. After the Memory Functional Test (#332) is run, the same delays described in Item 1 of this list are relevant.
3. The **test duplication-interface [[0]1] a | b long** command is also an exception to the first item. The first test in the sequence is the MBUS Time-out Query (#285) which takes from 30 seconds to 2 minutes to run. After the MBUS Time-out Query (#285) is run, the same delays described in Item 1 of this list are relevant.

4. The **test spe-standby long** command is also an exception to the first item. The first test in the sequence is, the Memory Functional Test (#332), takes from 30 seconds to two minutes to run. After the Memory Functional Test (#332) is run, the next test in the sequence, the Shadow Link Test (#318), takes from one to five minutes to run. After the Shadow Link Test (#318) is run, the next test in the sequence, the MBUS Time-out Query (#285), takes from 30 seconds to two minutes to run. After the MBUS Time-out Query (#285) is run, the same delays described in Item 1 of this list are relevant.

5. If one of listed test commands is executed so that the Active SPE puts the Standby SPE into Maintenance Mode, the Active SPE leaves the Standby SPE in Maintenance Mode for three minutes after the completion of the command. If an additional test command (with the exception of those described in Items 6, 7, and 8) is executed within three minutes, the one to 20-minute delay prior to the first test will **not** be observed. Each test in the sequence, including the first test, takes from 10 to 60 seconds to run.

   Furthermore, the Active SPE leaves the Standby SPE in Maintenance Mode for three minutes after the completion of the additional command. This is true for each additional test command issued on a Standby SPE component.

6. The **test memory [[0]1] a | b long** command is an exception to Item 5. Because of the nature of the Memory Functional Test (#332) the same delays as described in Item 2 are always observed for **test memory [[0]1] a | b long**.

7. The **test duplication-interface [[0]1] a | b long** command is also an exception to Item 5. Because of the nature of the MBUS Time-out Query (#285) the same delays as described in Item 3 are always observed for **test duplication-interface [[0]1] a | b long**.

8. The **test spe-standby long** command is also an exception to Item 5. Because of the nature of the Memory Functional Test (#285), the Shadow Link Test (#318), and the MBUS Time-out Query (#285) the same delays as described in Item 4 are always observed for **test spe-standby long**.

9. For test commands whose sequence spans multiple terminal screens (for example, **test spe-standby [short | long]**) the same 3-minute window that was described in Item 4 applies to pressing the “page” key to proceed to the next screen of test results. If the “page” key is not pressed within three minutes of the completion of the last test on the current screen, the one to 20 minute delay is observed before the first test on the next screen is run and its test results are displayed on the terminal. Each subsequent test on that screen takes from 10 to 60 seconds to run. If the “page” key is pressed within three minutes of the completion of the last test on the current screen, the one to 20 minute delay will **not** be observed.

Test Result Error Codes and Text Strings

The text string messages and error codes documented in the Error Codes tables at the end of this section may result from any of the system technician commands described earlier in this section.

In general, these error codes result from an inability of the Active SPE to successfully conduct a maintenance activity request on the Standby SPE and not from a problem detected by the test itself. In fact, all error codes except for 2015, 2021, 2047, 2048, 2049, and 2050 indicate that the test was not actually run.

If an error code returned from a test does not appear in the Error Code table, the Active SPE successfully conducted the maintenance activity request on the Standby SPE, and the test was actually run (in most cases). For details on this error code, refer to the documentation describing the specific object you now suspect as possibly being defective. In the Short and Long Test Sequences listed earlier in this section, the name of the object tested appears directly after each test number and name.

Several of the conditions corresponding to the error codes documented here may be detected as soon as the **test <component> [[0]1] a | b [short | long]** command is issued. The net result is that none of the tests in the sequence for the component will be attempted and a message will appear on the terminal message line describing why the command was rejected.

The following is a list of these text strings.

- **Cannot interrupt Standby SPE while entering maintenance mode; please try later**

  This message line error is displayed when a **refresh spe-standby** command is issued while maintenance software is in the process of putting the Standby SPE into Maintenance mode when any of the Error Types listed in “Hardware Error Log Entries and Test to Clear Value” have occurred and have not been resolved. It is also displayed when a system technician-demanded test has been issued and subsequently canceled because maintenance software is performing the Memory Functional Test, Shadow Link Test, or M-BUS Time-out Query. Another cause may be that maintenance software is in the process of putting the Standby SPE into Maintenance Mode to run any other system technician-demanded test that must be conducted on the Standby SPE in Maintenance Mode. Allow up to 10 minutes for the maintenance software to complete its attempt to put the Standby SPE into Maintenance Mode before issuing the **refresh spe-standby** command.

- **Cannot perform SPE interchange; for information use status system**

  This message is displayed in response to the **reset system interchange** command and because there are outstanding STBY-SPE errors. Display the error log using the “dup-spe” category, and following the procedures for all STBY-SPE errors.

- **Cannot reset standby SPE at this time; use the ‘status system’ command**

  This message is displayed when the standby SPE memory is not refreshed. Issue the **refresh spe-standby** command and try the reset again.

- **Could only hold Standby SPE reset because Active SPE is locked via SPE select switches**

  This message is displayed when the **refresh spe-standby** command is issued when the active SPE is selected via the SPE select switches. Because the select switches disable shadowing, the refresh command can not refresh the memory on the standby SPE. The only effect the refresh command has is to hold the standby SPE reset.

- **Refresh not successful; use the ‘display errors’ and the ‘dup-spe’ category to check for standby SPE errors**

  This message line error, which corresponds to Error Codes 2012, 2013, 2014, 2015, 2021, 2024, 2048, 2049, 2050, or 2051, is displayed when a **refresh spe-standby** command fails.

- **Standby SPE busy with another task; for information use status system**

  This message line error, which corresponds to Error Code 2018, is displayed if a test command on a Standby SPE component is attempted while the Active SPE is performing some Maintenance Mode activity on the Standby SPE other than system technician-demanded maintenance.

  1. Issue the **refresh spe-standby** command to put the Standby SPE into Standby Mode. This command may have to be issued multiple times. If the **refresh spe-standby** command successfully completes 5 times without the Standby SPE becoming labeled “standby” on the status system form, wait 20 minutes. This does not include cases where the command completes with the terminal message line errors “Refresh not successful; use ‘display errors’ to check for STBY-SPE errors” or “Cannot interrupt Standby SPE while entering maintenance mode; please try later.” Issue the **refresh spe-standby** command once more. If the Standby SPE is not labeled “standby” on the status system form after this attempt, use the **busyout spe-standby** and **release spe-standby** command to put the standby into standby mode.
  2. Repeat the command.
  3. Issue the **test spe-standby long** command.

- **Standby** SPE **failed to reset with requested restart level; check for STBY-SPE errors**

- **Standby SPE memory not refreshed; use the ‘refresh spe-standby’ command**

  When a command that requires the standby SPE to be brought into maintenance mode is entered, but the standby SPE memory is not refreshed, this message is displayed. Issue the **refresh spe-standby** command and retry the command.

- **Standby SPE not available; for information use status system**

  This message line error, which corresponds to Error Code 2020, is displayed if a test command on a Standby SPE component is attempted within the first five minutes of a restart of the Active SPE (that is, prior to the Active SPE holding the Standby SPE reset and refreshing it).

  1. Issue the **refresh spe-standby** command to put the Standby SPE into Standby Mode. This command may have to be issued multiple times. If the **refresh spe-standby** command successfully completes 5 times without the Standby SPE becoming labeled “standby” on the status system form, wait 20 minutes. This does not include cases where the command completes with the terminal message line errors “Refresh not successful; use ‘display errors’ to check for STBY-SPE errors” or “Cannot interrupt Standby SPE while entering maintenance mode; please try later.” Issue the **refresh spe-standby** command once more. If the Standby SPE is not labeled “standby” on the status system form after this attempt, use the **busyout spe-standby** and **release spe-standby** command to put the standby into standby mode.
  2. Repeat the command.
  3. Issue the **test spe-standby long** command.

- **Unable to interchange because the active SPE is locked active**

  An SPE interchange cannot be performed when the active SPE is locked via the SPE select switches. Move the select switches back to the auto position and retry the **reset system interchange** command.

- **Unable to interchange because the standby SPE is busied out**

  An SPE interchange can not be performed when the standby SPE is busied out. Release the standby SPE by entering the **release spe-standby** command and retry the command.

- **Unable to interchange due to alarms on the standby SPE; Use the ‘health-override’ option**

  When components in the standby SPE complex are alarmed, and if these Standby alarms are more severe than the alarms in the active SPE complex, the **reset system-interchange** command returns this message. Using the **reset system-interchange health-override** command forces the interchange. See the **Reset System** command page for more details.

Table 10-578. Test Result Error Codes Associated with the Standby SPE

Error Code	Test Result	Description/Recommendation
4	ABORT	The Active SPE was unable to disable or enable shadowing from Active SPE memory to Standby SPE memory. The communication path between the Active SPE and the carrier A Duplication Interface circuit pack may have failed, or the carrier A Duplication Interface circuit pack may have failed. 1. Check for Active SPE Maintenance/Tape Processor errors and alarms. Refer to PR-MAINT (Maintenance/Tape Processor) Maintenance documentation and follow the prescribed procedures. 2. Check for carrier A Duplication Interface circuit pack errors and alarms. Refer to DUPINT (Duplication Interface Circuit Pack) Maintenance documentation and follow the prescribed procedures. 3. If the B carrier contains the Active SPE, check the Inter-Carrier Cable to see if it is loose or disconnected. If so, follow the repair procedures for connecting the Inter-Carrier Cable described in Chapter 6, ''Reliability Systems: A Maintenance Aid''. 4. If all problems found in Steps 1, 2, and 3 have now been repaired, proceed with Step 7. If no problems were found in Steps 1, 2, and 3, proceed with Step 5. 5. Issue **display errors** and check to see if an Error Type 80 is logged against STBY-SPE. If so, the problem is the carrier A Duplication Interface circuit pack. Replace the carrier A Duplication Interface circuit pack as described in Chapter 6, ''Reliability Systems: A Maintenance Aid'' and proceed with Steps 7, 8, and 9.

Continued on next page

Table 10-578. Test Result Error Codes Associated with the Standby SPE — *Continued*

Error Code	Test Result	Description/Recommendation
4 *(cont'd.)*	ABORT	6. If no error type is logged, the problem may be the carrier A Duplication Interface circuit pack. ■ If the red LED on the carrier A Duplication Interface circuit pack is on, replace the carrier A Duplication Interface circuit pack as described in Chapter 6, ''Reliability Systems: A Maintenance Aid'' and proceed with Steps 7, 8, and 9. ■ If the red LED on the carrier A Duplication Interface circuit pack is not on **AND** if this is the first attempt to clear the problem, replace the carrier A Duplication Interface circuit pack as described in Chapter 6, ''Reliability Systems: A Maintenance Aid'' and proceed with Steps 7, 8, and 9. ■ If the LED is not on **AND** if this is the second attempt to clear the problem (that is, the carrier A Duplication Interface circuit pack has been replaced), escalate the problem. 7. Issue **refresh spe-standby** to put the Standby SPE into Standby Mode. This command may have to be issued multiple times. If **refresh spe-standby** successfully completes 5 times without the Standby SPE becoming labeled "standby" on the status system form, wait 20 minutes. This does not include cases where the command completes with the terminal message line errors "Refresh not successful; use 'display errors' to check for STBY-SPE errors" or "Cannot interrupt Standby SPE while entering maintenance mode; please try later." Issue **refresh spe-standby** once more. If the Standby SPE is not labeled "standby" on the status system form after this attempt, use **busyout spe-standby** and **release spe-standby** to put the standby into standby mode. 8. Repeat the command. 9. Issue the **test spe-standby long** command.
1029	ABORT	Internal system error 1. Retry the command at 1-minute intervals a maximum of 5 times.

Continued on next page

Table 10-578. Test Result Error Codes Associated with the Standby SPE — *Continued*

Error Code	Test Result	Description/Recommendation
1030	ABORT	The component on which the test was to be run is on the Standby SPE. This test may only be run on this component when it resides on the Active SPE. If it is absolutely necessary to conduct this test on the Standby SPE component, implement the following steps to make it become an Active SPE component. 1. Issue **refresh spe-standby** to return the Standby SPE to Standby Mode. This command may have to be issued multiple times. If **refresh spe-standby** successfully completes 5 times without the Standby SPE becoming labeled “standby” on the status system form, wait 20 minutes. This does not include cases where the command completes with the terminal message line errors “Refresh not successful; use ‘display errors’ to check for STBY-SPE errors” or “Cannot interrupt Standby SPE while entering maintenance mode; please try later.” Issue **refresh spe-standby** once more. 2. Issue **reset system interchange** in order to cause an SPE switch. At this point, the component resides on the Active SPE.
1030 *(cont’d.)*	ABORT	3. Move the SPE Select switches to make the SPE with the problem the current Active SPE. This action prevents software from switching to the other SPE since the current SPE has the error against it. 4. Repeat the test. 5. If the test passes and the alarm is resolved, return the SPE Select switches to the AUTO position. 6. If the test fails and the defective circuit pack is identified, the circuit pack needs to be replaced. However, the circuit pack now resides on the current Active SPE. Return the SPE Select switches to the AUTO position. Issue **refresh spe-standby** and then execute **reset system interchange** to cause an SPE switch. 7. The system is now on the healthy SPE. Replace the defective circuit pack on the Standby SPE as previously identified in Step 4. Refer to the “Replacing Defective SPE Circuit Packs” section in Chapter 6, ‘‘Reliability Systems: A Maintenance Aid’’. 8. Repeat the procedure, beginning with Step 1.
2011 2012 2013	ABORT	Internal system error 1. Retry the command at 1-minute intervals a maximum of 5 times.

Continued on next page

Table 10-578. Test Result Error Codes Associated with the Standby SPE — *Continued*

Error Code	Test Result	Description/Recommendation
2015	ABORT	The Standby SPE Maintenance/Tape Processor did not reply to an Active SPE request to hold the Standby SPE Processor reset. The communication path between the Active SPE and the Standby SPE Maintenance/Tape Processor may have failed, or the Standby SPE Maintenance/Tape Processor may have failed. Follow the procedures described for Error Code 2024 in the STBY-SPE section.
2016 2017	ABORT	The Active SPE attempted to put the Standby SPE into Maintenance Mode, but did not receive notification from the Standby SPE Maintenance software that it successfully entered Maintenance Mode **OR**, once in Maintenance Mode, the Standby SPE sent a request to the Active SPE to have the Active SPE conduct a portion of a test in the Standby SPE's behalf, but the Standby SPE did not receive a response to its request. In either case, the communication path between the Active SPE and the Standby SPE may have failed. Follow the procedures described for Error Code 2024 in the STBY-SPE section.
2018	ABORT	The test requires that a maintenance activity request be made to the Standby SPE; however, the request cannot be made because the Standby SPE is busy processing a previous maintenance activity request. 1. Issue **refresh spe-standby** to force the Standby SPE to Standby Mode. This command may have to be issued multiple times. If **refresh spe-standby** successfully completes 5 times without the Standby SPE becoming labeled "standby" on the status system form, wait 30 minutes. This does not include cases where the command completes with the terminal message line errors "Refresh not successful; use 'display errors' to check for STBY-SPE errors" or "Cannot interrupt Standby SPE while entering maintenance mode; please try later." Issue **refresh spe-standby** once more. 2. Repeat the test. 3. Issue **test spe-standby long** to thoroughly test all Standby SPE components.
2019	ABORT	A translation save on the Standby SPE was not carried out because the Shadow Link Test failed. (The Shadow Link Test was done to verify the integrity of the translation data on the Standby SPE.) 1. Check for Memory Shadowing Link errors and alarms. Refer to SHDW-LNK (Memory Shadowing Link) Maintenance documentation and follow the prescribed procedures.

Continued on next page

Table 10-578. Test Result Error Codes Associated with the Standby SPE — *Continued*

Error Code	Test Result	Description/Recommendation
2020	ABORT	The test requires that a maintenance activity request be made to the Standby SPE; however, the request cannot be made because the Active SPE was restarted within the last five minutes and has not yet initialized the Standby SPE. Therefore, the Standby SPE is not available to handle maintenance activity requests. 1. Issue **refresh spe-standby** to force the Standby SPE to Standby Mode. This command may have to be issued multiple times. If **refresh spe-standby** successfully completes 5 times without the Standby SPE becoming labeled “standby” on the status system form, wait 20 minutes. This does not include cases where the command completes with the terminal message line errors “Refresh not successful; use ‘display errors’ to check for STBY-SPE errors” or “Cannot interrupt Standby SPE while entering maintenance mode; please try later.” Issue **refresh spe-standby** once more. 2. Repeat the test. 3. If the Active SPE was restarted with a Cold 1 or a reboot, issue **test spe-standby long** to thoroughly test all Standby SPE components.
2021	ABORT	An attempt to refresh Standby SPE memory from Active SPE memory encountered a problem. In this case, the refresh from Active SPE Memory to Standby SPE Memory probably succeeded. However, the following steps should be followed just to verify that there are no problems. 1. Check for Active SPE Memory errors and alarms. Refer to MEM-BD (Memory circuit pack) Maintenance and follow the prescribed maintenance procedures. 2. Issue **refresh spe-standby**. This command may have to be issued multiple times. If **refresh spe-standby** successfully completes 5 times without the Standby SPE becoming labeled “standby” on the status system form, wait 20 minutes. This does not include cases where the command completes with the terminal message line errors “Refresh not successful; use ‘display errors’ to check for STBY-SPE errors” or “Cannot interrupt Standby SPE while entering maintenance mode; please try later.” Issue **refresh spe-standby** once more.

Continued on next page

Table 10-578. Test Result Error Codes Associated with the Standby SPE — *Continued*

Error Code	Test Result	Description/Recommendation
2022	ABORT	The Active SPE successfully put the Standby SPE into Maintenance Mode but received an incorrect response to a maintenance activity request that it made to the Standby SPE **OR,** once in Maintenance Mode, the Standby SPE sent a request to the Active SPE to have the Active SPE conduct a portion of a test in the Standby SPE's behalf, but the Standby SPE received an incorrect response to its request. The communication path between the Active SPE and the Standby SPE may have failed. Follow the procedures described for Error Code 2024 in the STBY-SPE section.
2023	ABORT	Internal system error.
2024	ABORT	The Standby SPE Maintenance/Tape Processor did not respond to an Active SPE request to release the Standby SPE Processor to perform a function; **OR** the Standby SPE Processor was released but did not carry out the requested function and/or did not reply to the request; **OR** the Standby SPE Processor was released but cannot run because the Standby SPE Memory is defective. The communication path between the Active SPE and the Standby SPE Maintenance/Tape Processor may have failed, or the Standby SPE Maintenance/Tape Processor may have failed, or the Standby SPE Processor may have failed. 1. Check for Active SPE Maintenance/Tape Processor errors and alarms. Refer to PR-MAINT (Maintenance/Tape Processor) Maintenance documentation and follow the prescribed procedures. 2. Check for carrier A Duplication Interface circuit pack errors and alarms. Refer to DUPINT (Duplication Interface Circuit Pack) Maintenance documentation and follow the prescribed procedures. 3. Check for Standby SPE Maintenance/Tape Processor errors and alarms. Refer to PR-MAINT (Maintenance/Tape Processor) Maintenance documentation and follow the prescribed procedures. 4. Check for Standby SPE Processor errors and alarms. Refer to PROCR (80286 Processor Circuit Pack) Maintenance documentation and follow the prescribed procedures. 5. Check for Standby SPE Memory errors and alarms. Refer to MEM-BD (Memory circuit pack) Maintenance documentation and follow the prescribed procedures.

Continued on next page

Table 10-578. Test Result Error Codes Associated with the Standby SPE — *Continued*

Error Code	Test Result	Description/Recommendation
2024 *(cont'd.)*	ABORT	6. Check the Inter-Carrier Cable to see if it is loose or disconnected. If so, follow the repair procedures for reconnecting the Inter-Cabinet Cable described in Chapter 6, "Reliability Systems: A Maintenance Aid". 7. If all problems found in Steps 1, 2, 3, 4, 5, and 6 have now been repaired, proceed with Step 11. If no problems were found in Steps 1, 2, 3, 4, 5, and 6, proceed with Step 8. 8. Issue **display errors** and check to see if Error Type 80 is logged against STBY-SPE. If so, the problem is the carrier A Duplication Interface circuit pack. Replace the carrier A Duplication Interface circuit pack as described in Chapter 6, "Reliability Systems: A Maintenance Aid" and proceed with Steps 11, 12, and 13. 9. Issue **display errors** and check to see if an Error Type 81 is logged against STBY-SPE. If so, the problem is the Standby SPE Processor circuit pack. Replace the Standby SPE Processor circuit pack as described in Chapter 6, "Reliability Systems: A Maintenance Aid" and proceed with Steps 11, 12, and 13.

Continued on next page

Table 10-578. Test Result Error Codes Associated with the Standby SPE — *Continued*

Error Code	Test Result	Description/Recommendation
2024 *(cont'd.)*	ABORT	10. Issue **display errors** and check to see if Error Type 58 is logged against STBY-SPE. If an Error Type 58 is logged **OR** if none of the three error types are logged, the problem is either the Standby SPE Processor circuit pack or the Standby SPE Memory circuit pack or the carrier A Duplication Interface circuit pack. ■ If the red LED on the Standby SPE Processor circuit pack is on and the Standby SPE Processor circuit pack has not been replaced yet, replace the Standby SPE Processor circuit pack as described in Chapter 6, ''Reliability Systems: A Maintenance Aid'' and proceed with Steps 11, 12, and 13. If the red LED on the Standby SPE Processor circuit pack is on, and if the Standby SPE Processor circuit pack has been replaced, replace the Standby SPE Memory circuit pack as described in Chapter 6, ''Reliability Systems: A Maintenance Aid'' and proceed with Steps 11, 12, and 13. ■ If the red LED on the Standby SPE Memory circuit pack is on, replace the Standby SPE Memory circuit pack as described in Chapter 6, ''Reliability Systems: A Maintenance Aid'' and proceed with Steps 11, 12, and 13. ■ If the red LED on the carrier A Duplication Interface circuit pack is on, replace the carrier A Duplication Interface circuit pack as described in Chapter 6, ''Reliability Systems: A Maintenance Aid'' and proceed with Steps 11, 12, and 13. ■ If none of the three red LEDs is on **AND** if this is the first attempt to clear the problem, replace the Standby SPE Processor circuit pack as described in Chapter 6, ''Reliability Systems: A Maintenance Aid'' and proceed with Steps 11, 12, and 13.

Continued on next page

Table 10-578. Test Result Error Codes Associated with the Standby SPE — *Continued*

Error Code	Test Result	Description/Recommendation
2024 *(cont'd.)*	ABORT	■ If none of the three red LEDs is on **AND** if this is the second attempt to clear the problem, replace the Standby SPE Memory circuit pack as described in Chapter 6, ''Reliability Systems: A Maintenance Aid'' and proceed with Steps 11, 12, and 13. ■ If none of the three red LEDs is on **AND** if this is the third attempt to clear the problem, replace the carrier A Duplication Interface circuit pack as described in Chapter 6, ''Reliability Systems: A Maintenance Aid'' and proceed with Steps 11, 12, and 13. ■ If none of the three red LEDs is on **AND** if this is the fourth attempt to clear the problem, replace the carrier B Duplication Interface circuit pack as described in Chapter 6, ''Reliability Systems: A Maintenance Aid'' and proceed with Steps 11, 12, and 13. ■ If none of the three LEDs is on **AND** if this is the fifth attempt to clear the problem, escalate the problem.
2024 *(cont'd.)*	ABORT	11. Issue **refresh spe-standby** to put the Standby SPE into Standby Mode. This command may have to be issued multiple times. If **refresh spe-standby** successfully completes 5 times without the Standby SPE becoming labeled "standby" on the status system form, wait 20 minutes. This does not include cases where the command completes with the terminal message line errors "Refresh not successful; use 'display errors' to check for STBY-SPE errors" or "Cannot interrupt Standby SPE while entering maintenance mode; please try later." Issue **refresh spe-standby** once more. If the Standby SPE is not labeled "standby" on the status system form after this attempt, use **busyout spe-standby** and **release spe-standby** to put the standby into standby mode. 12. Repeat the command. 13. Issue the **test spe-standby long** command.

Continued on next page

Table 10-578. Test Result Error Codes Associated with the Standby SPE — *Continued*

Error Code	Test Result	Description/Recommendation
2025	ABORT	The Standby SPE Maintenance/Tape Processor successfully released the Standby SPE processor, but the Standby SPE processor did not successfully carry out the requested function. Either there is a problem with one or more components that make up the Memory Shadowing Link such that Active SPE Memory was not accurately shadowed to Standby SPE Memory **OR** there is a problem with the Standby SPE Processor circuit pack or the Standby SPE Memory circuit pack. 1. Check for both Active SPE and Standby SPE Common Shadow Circuit errors and alarms. Refer to SHDW-CIR (Common Shadow Circuit) and follow the procedures. 2. Check for Standby SPE Memory errors and alarms. Refer to MEM-BD (Memory circuit pack) and follow the procedures. 3. Check for Standby SPE Processor errors and alarms. Refer to PROCR and follow the procedures. 4. Check the Inter-Carrier Cable to see if the cable is loose or disconnected. If so, follow the repair procedures for reconnecting the Inter-Carrier Cable described in Chapter 6, ''Reliability Systems: A Maintenance Aid''. 5. If all problems found in Steps 1, 2, 3, and 4 have now been repaired, proceed with Step 10. If no problems were found in Steps 1, 2, 3, and 4, proceed with Step 6.

Continued on next page

Table 10-578. Test Result Error Codes Associated with the Standby SPE — *Continued*

Error Code	Test Result	Description/Recommendation
2025 *(cont'd.)*	ABORT	6. Issue **display errors** and check to see if an Error Type 80 is logged against STBY-SPE. If so, the problem is the carrier A Duplication Interface circuit pack. Replace the carrier A Duplication Interface circuit pack as described in Chapter 6, ''Reliability Systems: A Maintenance Aid'' and proceed with Steps 10, 11, and 12. 7. Issue **display errors** and check to see if an Error Type 82 is logged against STBY-SPE. If so, the problem is the carrier B Duplication Interface circuit pack. Replace the carrier B Duplication Interface circuit pack as described in Chapter 6, ''Reliability Systems: A Maintenance Aid'' and proceed with Steps 10, 11, and 12. 8. Issue **display errors** and check to see if Error Type 85 is logged against STBY-SPE. If so, the problem may be the Standby SPE Memory circuit pack. Replace the Memory circuit pack as described in Chapter 6, ''Reliability Systems: A Maintenance Aid'' and proceed with Steps 10, 11, and 12. 9. Issue **display errors** and check to see if Error Type 58 is logged against STBY-SPE. If Error Type 58 is logged **OR** if no error type is logged, the problem is either the Standby SPE Processor circuit pack, the Standby SPE Memory circuit pack, or the carrier A Duplication Interface circuit pack. ■ If the red LED on the Standby SPE Processor circuit pack is on and the Standby SPE Processor circuit pack has not been replaced yet, replace the Standby SPE Processor circuit pack as described in Chapter 6, ''Reliability Systems: A Maintenance Aid'' and proceed with Steps 11, 12, and 13. If the red LED on the Standby SPE Processor circuit pack is on, and if the Standby SPE Processor circuit pack has been replaced, replace the Standby SPE Memory circuit pack as described in Chapter 6, ''Reliability Systems: A Maintenance Aid'' and proceed with Steps 11, 12, and 13.

Continued on next page

Table 10-578. Test Result Error Codes Associated with the Standby SPE — *Continued*

Error Code	Test Result	Description/Recommendation
2025 *(cont'd.)*	ABORT	■ If the red LED on the Standby SPE Memory circuit pack is on, replace the Standby SPE Memory circuit pack as described in Chapter 6, ''Reliability Systems: A Maintenance Aid'' and proceed with Steps 10, 11, and 12. ■ If the red LED on the carrier A Duplication Interface circuit pack is on, replace the carrier A Duplication Interface circuit pack as described in Chapter 6, ''Reliability Systems: A Maintenance Aid'' and proceed with Steps 11, 12, and 13. ■ If none of the three red LEDs is on **AND** if this is the first attempt to clear the problem, replace the Standby SPE Processor circuit pack as described in Chapter 6, ''Reliability Systems: A Maintenance Aid'' and proceed with Steps 10, 11, and 12. ■ If none of the three red LEDs is on **AND** if this is the second attempt to clear the problem (that is, the Standby SPE Processor circuit pack has already been replaced), replace the Standby SPE Memory circuit pack as described in Chapter 6, ''Reliability Systems: A Maintenance Aid'' and proceed with Steps 10, 11, and 12. ■ If none of the three red LEDs is on **AND** if this is the third attempt to clear the problem (that is, the Standby SPE Processor and Standby SPE Memory circuit packs have already been replaced), replace the carrier A Duplication Interface circuit pack as described in Chapter 6, ''Reliability Systems: A Maintenance Aid'' and proceed with Steps 10, 11, and 12.

Continued on next page

Table 10-578. Test Result Error Codes Associated with the Standby SPE — *Continued*

Error Code	Test Result	Description/Recommendation
2025 *(cont'd.)*	ABORT	■ If none of the three red LEDs is on **AND** if this is the fourth attempt to clear the problem (that is, the Standby SPE Processor, Standby SPE Memory, and carrier A Duplication Interface circuit packs have already been replaced), proceed with Step 10. ■ If none of the three red LEDs is on **AND** if this is the fifth attempt to clear the problem (the Standby SPE Processor, Standby SPE Memory, and carrier A Duplication Interface circuit packs have been replaced and the test has been repeated once), escalate the problem. 10. Issue **refresh spe-standby** to put the Standby SPE into Standby Mode. This command may have to be issued multiple times. If **refresh spe-standby** successfully completes 5 times without the Standby SPE becoming labeled "standby" on the status system form, wait 20 minutes. This does not include cases where the command completes with the terminal message line errors "Refresh not successful; use 'display errors' to check for STBY-SPE errors" or "Cannot interrupt Standby SPE while entering maintenance mode; please try later." Issue the **refresh spe-standby** command once more. If the Standby SPE is not labeled "standby" on the status system form after this attempt, use the **busyout spe-standby** and **release spe-standby** command to put the standby into standby mode. 11. Repeat the command. 12. Issue **test spe-standby long**.

Continued on next page

Table 10-578. Test Result Error Codes Associated with the Standby SPE — *Continued*

Error Code	Test Result	Description/Recommendation
2051	ABORT	When attempting to refresh Standby SPE memory from Active SPE memory, the Active SPE could not determine the status of one of the Duplication Interface circuit packs, or it determined that one of the Duplication Interface circuit packs was defective. 1. Check for carrier A Duplication Interface circuit pack errors and alarms. Refer to DUPINT (Duplication Interface Circuit Pack) Maintenance documentation and follow the prescribed procedures. 2. Check for carrier B Duplication Interface circuit pack errors and alarms. Refer to DUPINT (Duplication Interface Circuit Pack) Maintenance and follow the prescribed procedures. 3. Check the Inter-Carrier Cable to see if the cable is loose or disconnected. If so, follow the repair procedures for reconnecting the Inter-Carrier Cable described in Chapter 6, "Reliability Systems: A Maintenance Aid". 4. If all problems found in Steps 1, 2, and 3 have now been repaired, proceed with Step 8. If no problems were found in Steps 1, 2, and 3, proceed with Step 5. 5. Issue **display errors** and check to see if Error Type 80 is logged against STBY-SPE. If so, the problem is the carrier A Duplication Interface circuit pack. Replace the carrier A Duplication Interface circuit pack as described in Chapter 6, "Reliability Systems: A Maintenance Aid" and proceed with Steps 8, 9, and 10. 6. Issue **display errors** and check to see if Error Type 82 is logged against STBY-SPE. If so, the problem is the carrier B Duplication Interface circuit pack. Replace the carrier B Duplication Interface circuit pack as described in Chapter 6, "Reliability Systems: A Maintenance Aid" and proceed with Steps 8, 9, and 10. 7. If Error Type 80 or 82 is not logged, escalate the problem.

Continued on next page

Table 10-578. Test Result Error Codes Associated with the Standby SPE — *Continued*

Error Code	Test Result	Description/Recommendation
2051 *(cont'd.)*	ABORT	8. Issue **refresh spe-standby** to put the Standby SPE in Standby Mode. This command may have to be issued multiple times. If **refresh spe-standby** successfully completes 5 times without the Standby SPE becoming labeled "standby" on the status system form, wait 20 minutes. This does not include cases where the command completes with the terminal message line errors "Refresh not successful; use 'display errors' to check for STBY-SPE errors" or "Cannot interrupt Standby SPE while entering maintenance mode; please try later." Issue **refresh spe-standby** once more. 9. Repeat the test. 10. Issue **test spe-standby long** to test Standby SPE components.
2054	ABORT	This indicates an incompatibility between the two Processor circuit packs in a Duplication Option system. Follow the repair steps for STBY-SPE error 139 note (k).
2068	ABORT	When attempting to refresh Standby SPE memory from Active SPE memory, a problem was encountered when refreshing Packet Control circuit pack memory. 1. Retry the command at 1-minute intervals a maximum of 5 times.
other	ABORT	Any ABORT with an error code other than the ones listed previously indicates a problem that prevented the test from running. See Test Result of each maintenance object under test for details.
other	FAIL	Any FAIL indicates that the test was actually run on the associated Standby SPE component. However, the test did not succeed and returned FAIL with the reason for the failure. See Test Result of each maintenance object under test for details.
	PASS	The test was actually successfully run on the associated Standby SPE component and returned PASS. See Test Result of each maintenance object under test for details.

STRAT-3 (Stratum 3 Clock)

MO Name (in Alarm Log)	Alarm Level	Initial Command to Run	Full Name of MO
STRAT-3	MAJOR	test synchronization	Stratum 3 Clock
STRAT-3	MINOR	test synchronization	Stratum 3 Clock
STRAT-3	WARNING	test synchronization	Stratum 3 Clock

The *Digital Synchronization Network Plan (PUB 60110)* specifies a hierarchy of synchronization nodes consisting of strata 1 to 4, where the sole Stratum 1 clock in the network is the most accurate. DEFINITY supports both Stratum 3 and Stratum 4 operations. Refer to SYNC (Synchronization) Maintenance documentation for details on Stratum 4 operation.

A Stratum 3 clock derives its timing from two DS1 references that are connected to a Stratum 3 or better (that is, lower stratum) source. The Stratum 3 clock provides a holdover of at least 24 hours should both DS1 references fail. (After 24 hours, the Stratum 3 clock still provides service but its accuracy may be degraded). The *Digital Synchronization Network Plan (PUB 60110)* requires that the Stratum 3 clock have duplicated components.

The recognition of the Stratum 3 clock itself as well as its alarm signals, is supported only by the TN780 Tone-Clock circuit pack. The TN780 Tone-Clock circuit pack is also backwards-compatible with the TN768 Tone-Clock circuit pack.

The Stratum 3 clock may be connected to either the PPN or an EPN if the TN780 Tone-Clock circuit pack(s) is present in that port network. However, for reliability, it is recommended that the clock be connected to the PPN.

The only operation that software can perform is a query of the alarm leads. The only recovery action that can be performed on a catastrophic failure of the Stratum 3 clock is the utilization of the local oscillator on the Active TN780 Tone-Clock circuit pack. Neither software nor the TN780 Tone-Clock circuit pack can request additional information about the health of the Stratum 3 clock other than the information provided by the alarm leads. Furthermore, neither the software nor the TN780 Tone-Clock circuit pack can request that the external clock switch references, change configuration, disable/enable, initialize, etc.

In G3iV1.1-286 and G3iV2-386, the Stratum 3 clock has been implemented as an external that follows the specification in PUB 60110 for Stratum 3. Figure 10-90 on page 10-1558 shows how the Stratum 3 hardware configuration provides clock and alarm signals to the TN780 Tone-Clock circuit pack(s). The reference DS1 facilities are connected directly to the Stratum 3 clock for timing purposes, but the DS1 data may be routed into the switch by using a Y connector.

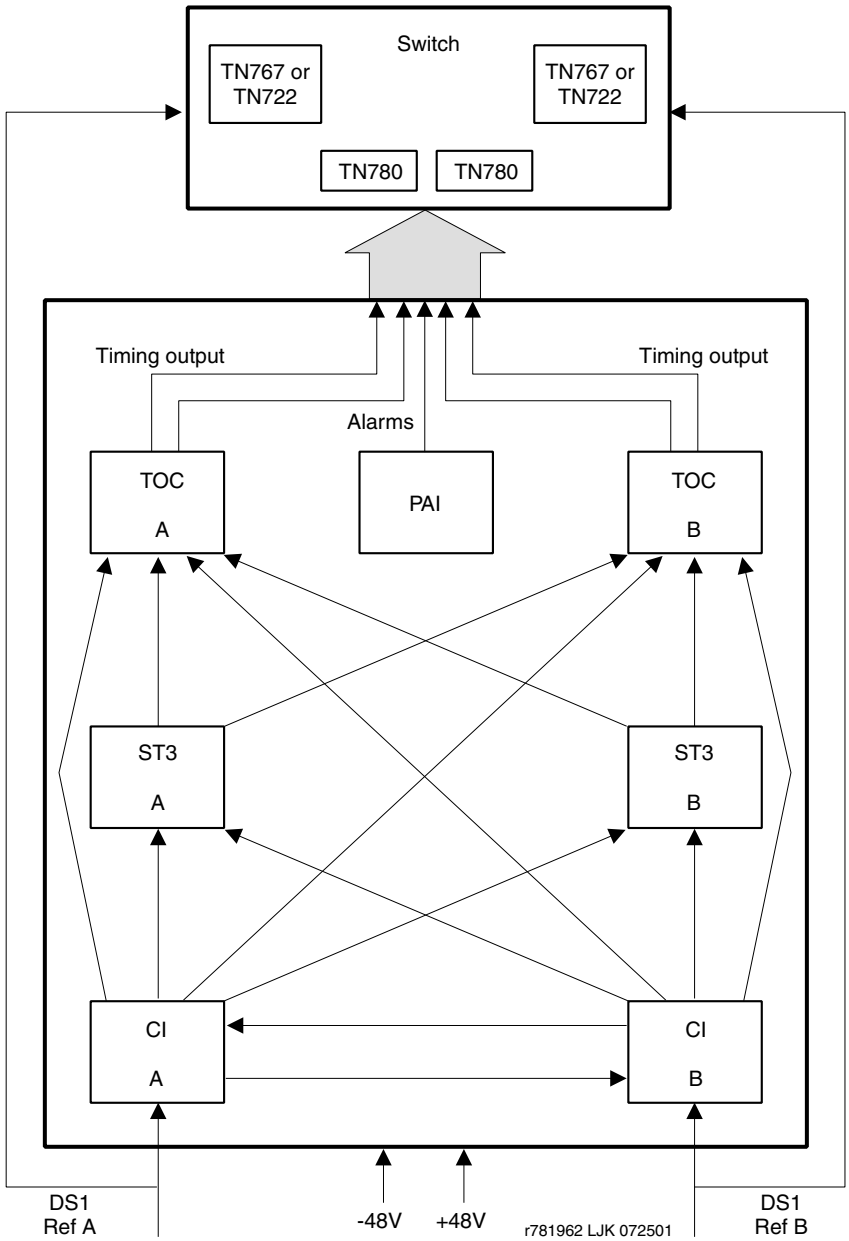

Figure 10-90. Stratum 3 Clock Hardware Configuration

NOTE:
When looking in the Stratum 3 cabinet, “A” card is on the left and “B” card is on the right.

Stratum 3 Clock LED Strategy

Red and green LEDs are provided on the components of the Stratum 3 clock for status and alarm indications.

WARNING:
The normal LED scheme is not followed for this device. Green LEDs do not indicate maintenance activity. There are no yellow LEDs, and there are more than three LEDs per circuit pack.

The Stratum 3 clock has the following components:

- 2 Clock Input cards (CI)

  Provides the logic to select the better DS1 reference or Clock Input card. The red FAIL LED on this card indicates a failure with the card or the DS1 reference connected to it.

- 2 Stratum 3 Cards (ST3)

  Provides 24-hour holdover. The red FAIL LED on this card indicates a failure with the card. Replace the card.

- 2 Timing Output Cards (TOC)

  Provides cable length compensation, multiple output ports, selection of the ST3, and CI outputs. This type of card has two red failure LEDs: one indicates a failure of the card; the other indicates a failure in one or more output ports. In either case, replace the card.

- 1 PBX Alarm Interface (PAI)

  Filters power supplied to the clock, provides fuse protection, and provides alarm indications based on inputs supplied by other cards. The six LEDs on this card provide indications for the six alarm or status conditions as follows:

  1. Loss of DS1 reference A.
  2. Loss of DS1 reference B.
  3. Loss of one clock unit.
  4. Loss of both clock units.
  5. Loss of one power supply.
  6. Loss of both power supplies.

NOTE:
Removal of a card in the Stratum 3 clock may cause alarm(s) to be resolved and the query test to pass. However, the removed cards should still be replaced to restore the Stratum 3 clock to full service.

The output of the CI and PAI cards go directly to the TN780 Tone-Clock circuit pack via two 25-pair amp-terminated cables. All of the cards have red and/or green LEDs for providing status or alarm indications. The following table shows the Stratum 3 Clock LED indications.

NOTE:
The abbreviations used in the table were defined previously with the exception of SRC (source) and PLL (Phase Locked Loop).

Table 10-579. Stratum 3 Clock LED Indications

Card	Name	Color	Indication
PAI	REF A	Red	Loss of input reference A or CI A failed
	REF B	Red	Loss of input reference B or CI A failed
	ST A	Red	Failed Stratum 3 clock A
	ST B	Red	Failed Stratum 3 clock B
	PWR A	Green	-48VDC A present
	PWR B	Green	-48VDC B present
CI	FAIL	Red	Card failure
	DS1	Green	DS1 source present
	CC	Green	Composite clock source[1] present
	SRC ACTIVE	Green	Card is currently on-line
ST3	FAIL	Red	Card failure
	LOCK	Red	PLL lost sync with reference or holdover mode
	REF A	Red	Timing Reference from CI A
	REF B	Red	Timing Reference from CI B
TOC	FAIL	Red	Card failure
	PORT ALM	Red	Output port alarm (one or more)
	ST	Green	Reference present from ST clock
	INPUT	Green	Reference present from CI
	500’	Green	500 feet phase advance
	1000’	Green	1000 feet phase advance

1 Composite Clock source refers to the protocol used to electrically transfer timing from the Stratum 3 clock to the PBX switch.

NOTE:
When looking in the Stratum 3 cabinet, “A” card is on the left and “B” card is on the right.

Hardware Error Log Entries and Test to Clear Values

Stratum 3 Clock Error Log Entries

Error Type	Aux Data	Associated Test	Alarm Level	On/Off Board	Test to Clear Value
0[1]	0	Any	Any	Any	test synchronization r 4
1 (d)	Any	Stratum 3 Clock Alarm Query (#649)	MINOR	OFF	test synchronization r 4
257 (e)	Any	Stratum 3 Clock Alarm Query (#649)	MINOR	OFF	test synchronization r 4
257 (c)		None	WARNING	ON	
513 (f)	Any	Stratum 3 Clock Alarm Query (#649)	MINOR	ON	test synchronization r 4
769 (g)	Any	Stratum 3 Clock Alarm Query (#649)	MINOR	ON	test synchronization r 4
1025 (h)	Any	Stratum 3 Clock Alarm Query (#649)	MINOR/MAJOR(a)	ON	test synchronization r 4
1281 (i)	Any	Stratum 3 Clock Alarm Query (#649)	MINOR/MAJOR(a)	ON	test synchronization r 4
1537 (b)		none	MINOR/MAJOR(a)	ON	

1 Run the Short Test Sequence. Refer to the appropriate test description and follow the recommended procedures.

Notes:

a. In the context of the Stratum 3 clock, an OFF-BOARD alarm occurs when there is a DS1 facility problem; otherwise, the alarm is ON-BOARD indicating that there is a fault in the Stratum 3 clock or in the connection between the Stratum 3 clock and the PBX (Private Branch Exchange) switch. If the Stratum 3 clock cannot be referenced, and therefore the local oscillator on the TN780 Tone-Clock circuit pack must serve as the reference instead, a Major alarm is raised. Otherwise, a Minor alarm is raised.

b. This error can be caused by one of the following conditions:

   1. One or both TOCs (Timing Output Cards) may have failed,
   2. the connection between the Stratum 3 clock and the TN780 Tone-Clock circuit pack may be faulty, or
   3. the TN780 Tone-Clock circuit pack may be defective.

A Minor alarm results if the Stratum 3 clock can still provide timing to the PBX; otherwise, a Major alarm is raised because the Stratum 3 clock is not providing timing and the PBX is referencing the local oscillator on the TN780 Tone-Clock circuit pack. If only the Active TN780 Tone-Clock circuit pack were faulty, the Standby TN780 Tone-Clock circuit pack would become active and still synchronize to the Stratum 3 clock. When the system switches to the Standby Tone-Clock circuit pack, the alarm is resolved, and it raises a TDM-CLK (TDM Bus Clock) alarm to indicate that the TN780 Tone-Clock circuit pack may be defective.

If the alarm is minor:

Look for a red LED on either or both TOC cards. If there is a red LED, then replace the card. If there is no red LED, then, using the *Stratum 3 Wiring Guide*, check that the wiring installation is correct. After replacing the card or correctly rewiring the installation, clear the alarm by first issuing the **disable synchronization-switch** command followed by the **enable synchronization-switch** command. Wait two minutes and then execute the **status synchronization** command. If Maintenance Name on the status screen shows “STRAT-3,” then the problem is resolved. If not, then escalate the problem.

If the alarm is major:

Check connections between the Stratum 3 clock and the PBX. If there are no loose connections, using the *Stratum 3 Wiring Guide*, check that the wiring installation is correct. After reconnecting the loose connection or correctly rewiring it, clear the alarm by first issuing the **disable synchronization-switch** command followed by the **enable synchronization-switch** command. Wait one minute, and then execute the **status synchronization** command. If Maintenance Name on the status screen shows “STRAT-3,” then the problem is resolved. If not, then escalate the problem.

If the Standby Tone-Clock circuit pack become active:

Check connection between the Stratum 3 clock and the TN780 Tone-Clock circuit pack from which the system has just switched. If there are no loose connections, then, replace the TN780 Tone-Clock circuit pack. Refer to the “How to Replace a Tone-Clock Circuit Pack” section in the TDM-CLK (TDM Bus Clock) Maintenance documentation. Before switching back to the new TN780 Tone-Clock circuit pack, use the **test tone-clock PC long** command to check that the Tone-Clock is receiving a signal from the Stratum 3 clock. The notation “PC” denotes a port network number and carrier. If all tests pass, switch to the new Tone-Clock circuit pack via the **set tone-clock PC override** command. If Test #651 fails, then the original TN780 Tone-Clock should be reinserted, and the cable between the Stratum 3 clock and the TN780 Tone-Clock circuit pack should be replaced. If Test #651 continues to fail, then escalate the problem.

c. This error indicates that the Tone/Clock circuit pack in the master port network is not a TN780 Tone/Clock circuit pack when a Stratum 3 clock is administered. Verify that the Tone/Clock in the master port network is TN780.

d. This error indicates that the Stratum 3 clock has either reference A or CI card A failed. Please refer to the error code 1 in the test description of the Test #649 for the repair procedure.

e. This error indicates that the Stratum 3 clock has one power supply failed. Please refer to the error code 2 in the test description of the Test #649 for the repair procedure.

f. This error indicates that the Stratum 3 clock has one clock unit failed. Please refer to the error code 4 in the test description of the Test #649 for the repair procedure.

g. This error indicates that the Stratum 3 clock has either reference B or CI card B failed. Please refer to the error code 8 in the test description of the Test #649 for the repair procedure.

h. This error indicates that the Stratum 3 clock has all power supplies failed. Please refer to the error code 16 in the test description of the Test #649 for the repair procedure.

i. This error indicates that the Stratum 3 clock has all clock units failed. Please refer to the error code 32 in the test description of the Test #649 for the repair procedure.

System Technician-Demanded Tests: Descriptions and Error Codes

Always investigate tests in the order presented in the following table when inspecting errors in the system. By clearing error codes associated with the *Stratum 3 Clock Alarm Query Test,* for example, you may also clear errors generated from other tests in the testing sequence.

Order of Investigation	Short Test Sequence	Long Test Sequence	D/ND[1]
Stratum 3 Clock Alarm Query (#649)	X	X	ND

1 D = Destructive; ND = Nondestructive

Stratum 3 Clock Alarm Query (#649)

The Stratum 3 clock provides the system with the following six alarm indications via the TN780 Tone-Clock circuit pack:

1. Reference A failed or CI card A failed.
2. Reference B failed or CI card B failed.
3. One power supply failed.
4. All power supplies failed.
5. One clock unit failed.
6. All clock unit(s) failed.

This test queries the Stratum 3 clock for its alarm status (through the TN780 Tone-Clock circuit pack) and reports the results of the query.

WARNING:
The removal of a card in the Stratum 3 clock may cause alarm(s) to be resolved and the query test to pass. However, the removed cards should still be replaced to restore the Stratum 3 clock to full service.

Table 10-580. TEST #649 Stratum 3 Clock Alarm Query

Error Code	Test Result	Description/Recommendation
1001	ABORT	The system could not allocate the necessary resources to run this test. 1. Retry the command at 1-minute intervals a maximum of 5 times.
1005	ABORT	This test aborts when it is run on a Stratum 4 system. Do not change synchronization to Stratum 3 without consulting the synchronization plan administrator for this switch.
1	FAIL	Either Reference A failed or CI card A failed. This condition usually indicates a failure of the DS1 reference; however, there may also be a failure of the CI card to which the reference is connected. System Technician dispatched to investigate this problem should take a spare CI card in case the CI card caused the failure. If you are NOT ON-SITE, use the following procedure: 1. Look for DS1-BD (DS1 Interface Circuit Pack) errors using the **display error** command. Refer to the DS1-BD Maintenance documentation for recommended strategy to resolve any DS1-BD errors found. 2. If there are no DS1-BD errors OR after resolving all DS1-BD errors, issue the **test synchronization r 4** command to determine if the alarm is still present. If all repetitions of the tests pass, then the alarm no longer exists. Otherwise, system technician should be dispatched with a spare CI card to use the following instructions on-site. If you are ON-SITE, use the following procedure: 1. Look for a red LED on CI card A (that is, the left CI card). If there is a red LED, then replace the CI card, if a spare is available. If no spare CI is available on-site, proceed to Step 3. If after replacing the CI card, the red LED on the new CI card lights also, then proceed to Step 3. 2. If a spare CI card is available, replace the suspect CI card. Otherwise, issue the **test synchronization r 4** command to clear the alarm. If any test repetitions fail, follow the procedure for those failures.

Continued on next page

Table 10-580. TEST #649 Stratum 3 Clock Alarm Query — *Continued*

Error Code	Test Result	Description/Recommendation
1 *(cont'd.)*	FAIL	3. Look for DS1-BD (DS1 Interface Circuit Pack) errors using the **display error** command. Refer to the DS1-BD Maintenance documentation for recommended strategy to resolve any DS1-BD errors found. If there are no DS1-BD errors, proceed to Step 5. 4. After all DS1-BD errors have been resolved, determine if the alarm still exists by issuing the **test synchronization r 4** command to clear the alarm. If any test repetitions fail, follow the procedure for those failures. 5. Check the DS1 reference A connections to the Stratum 3 clock. 6. Determine if the alarm still exists by issuing the **test synchronization r 4** command to clear the alarm. If any test repetitions fail, follow the procedure for those failures. If the problem persists after you have performed this procedure three times, follow normal escalation procedures.
2	FAIL	One power supply failed. This error only occurs when the Stratum 3 clock has two power supplies, and one of them has failed. However, the clock can function with one power supply. 1. Locate the failed power supply by looking for a power supply with a red LED and replace it. 2. Determine if the alarm still exists by issuing the **test synchronization r 4** command to clear the alarm. If any test repetitions fail, then follow the procedures for those test failures. If the problem persists after you have performed this procedure three times, then follow normal escalation procedures.
4	FAIL	One clock unit failed. 1. Look at the Stratum 3 cabinet for a red LED on a circuit card marked "ST3." Replace the card. 2. Determine if the alarm still exists by issuing the **test synchronization r 4** to clear the alarm. If any test repetitions fail, follow the procedures for those failures. If the problem persists after you have performed this procedure three times, follow normal escalation procedures.

Continued on next page

Table 10-580. TEST #649 Stratum 3 Clock Alarm Query — *Continued*

Error Code	Test Result	Description/Recommendation
8	FAIL	Reference B failed or CI card B failed. This condition usually indicates a failure of the DS1 reference; however, there may also be a failure of the CI card to which the reference is connected. System Technician dispatched to investigate this problem should take a spare CI card in case the CI card caused the failure. If you are NOT ON-SITE, use the following procedure: 1. If there are no DS1-BD errors OR after resolving all DS1-BD errors, issue the **test synchronization r 4** command to determine if the alarm is still present. If all repetitions of the tests pass, the alarm no longer exists. Otherwise, system technician should be dispatched with a spare CI card to use the following instructions on-site. If you are ON-SITE, use the following procedure: 1. Look for a red LED on a CI card B (the right CI card). If there is a red LED, replace the CI card, if a spare is available. If no spare CI is available on-site, proceed to Step 3. If after replacing the CI card, the red LED on the new CI card lights also, proceed to Step 3. 2. Otherwise, issue the **test synchronization r 4** command to clear the alarm. If any test repetitions fail, follow the procedure for those failures.
8 *(cont'd.)*	FAIL	3. Look for DS1-BD (DS1 Interface Circuit Pack) errors using the **display error** command. Refer to the DS1-BD Maintenance documentation for recommended strategy to resolve any DS1-BD errors found. If there are no DS1-BD errors, proceed to Step 5. 4. After all DS1-BD errors have been resolved, determine if the alarm still exists by issuing the **test synchronization r 4** command to clear the alarm. If any test repetitions fail, follow the procedure for those failures. 5. Check the DS1 reference A connections to the Stratum 3 clock. 6. Determine if the alarm still exists by issuing the **test synchronization r 4** command to clear the alarm. If any test repetitions fail, follow the procedure for those failures. If the problem persists after you have performed this procedure three times, follow normal escalation procedures.

Continued on next page

Table 10-580. TEST #649 Stratum 3 Clock Alarm Query — *Continued*

Error Code	Test Result	Description/Recommendation
16	FAIL	All power supplies failed. 1. Replace the failed power supplies. 2. If battery backup for the Stratum 3 clock is not supplied or if the battery backup holdover time has been exceeded, the system references the local oscillator on the Active TN780 Tone-Clock circuit pack until software detects one or both power supplies has(have) been restored (approximately 40 minutes). To speed up this restoration, issue the **test synchronization r 4** command. All tests should pass. If any repetitions should fail, follow the procedures for those failures. If the problem persists after you have performed this procedure three times, follow normal escalation procedures.
32	FAIL	All clock unit(s) failed. 1. Look at the Stratum 3 cabinet for red LEDs on circuit cards marked "ST3." Replace the card(s). 2. Determine if the alarm still exists by issuing the **test synchronization r 4** command to clear the alarm. If any test repetitions fail, follow the procedure for those failures. If the problem persists after you have performed this procedure three times, follow normal escalation procedures.
2101	FAIL	The TN780 Tone-Clock circuit pack detects loss of signal. Refer to Note (b) of the STRAT-3 Hardware Error Log Entries table in the STRAT-3 (Stratum 3 Clock) Maintenance documentation for replacement procedures.
	PASS	The Stratum 3 clock has reported that it has no alarm conditions. If synchronization problems have been reported, look for SYNC errors and refer to SYNC (Synchronization) Maintenance documentation for recommended strategy for those errors.

SVC-SLOT (Service Slot)

MO Name (in Alarm Log)	Alarm Level	Initial Command to Run	Full Name of MO
SVC-SLOT	MINOR	none	Service Slot

The Service Slot maintenance object is used to detect when an invalid circuit pack is inserted into a SERVICE slot. The SERVICE slot is the leftmost slot in the J58890BB Port Carrier. It is identified as circuit pack slot location “00” in all commands, field entries, and displays used by the system administrator and the service technician.

This slot does not provide tip and ring connectivity to the wall field. Therefore, only the following circuit pack types are allowed in the slot:

- Call Classifier (TN744)
- Integrated Announcement (TN750)
- Maintenance/Test (TN771C)
- Speech Synthesizer (TN725B)
- Tone Detector (TN748C)

A MINOR alarm is generated against the Service Slot maintenance object when a circuit pack of a type other than that included in the previous list is inserted into a SERVICE slot.

The Service Slot maintenance object name is used instead of the maintenance object name for the illegal circuit pack to prevent any attempt to assign a port to an illegal circuit pack that is physically inserted into the SERVICE slot.

Hardware Error Log Entries and Test to Clear Values

Service Slot Error Log Entries

Error Type	Aux Data	Associated Test	Alarm Level	On/Off Board	Test to Clear Value
600 (a)		None	MINOR	ON	

Notes:

a. This error type indicates that a circuit pack type other than one of the following types was inserted into slot 00 (SERVICE slot) of the J58890BB port carrier.

- Call Classifier (TN744)
- Integrated Announcement (TN750)
- Maintenance/Test (TN771C)
- Speech Synthesizer (TN725B)
- Tone Detector (TN748C)

The code of the invalid circuit pack can be displayed by using the **list configuration board UUCSS** command, where “UU” is the universal cabinet number, “C” is the carrier number, and “SS” is the slot number (always 00) of the alarmed circuit pack.

Remove the invalid circuit pack to retire the alarm.

SW-CTL (Switch Control)

MO Name (in Alarm Log)	Alarm Level	Initial Command to Run	Full Name of MO
SW-CTL	MINOR	test network-control a sh	Switch Control
SW-CTL	MAJOR	test network-control a sh	Switch Control

The Switch Control resides on the TN2401/TN794 NetPkt (or TN777B Netcon) circuit pack. Standard systems have a single NetPkt circuit pack and High and Critical Reliability systems have a NetPkt circuit pack in each SPE complex. The NetPkt in a standard system cannot be replaced without bringing the system down. The NetPkt in the standby SPE of a High or Critical Reliability system can be changed without affecting normal system operation.

The Switch Control is used to send control information between port circuit packs and the processor. This control information is sent through the PPN cabinet's Time Division Multiplex (TDM) Bus. The portion of the TDM Bus used to transmit control messages is called the control channel. The control channel can be on either TDM Bus A or TDM Bus B, but only one bus is used for the control channel at any given time.

The TN2401/TN794 provides LAPD connections over the TDM bus, as currently provided by the Processor Interface (TN765). When reusing the existing control carrier, the NETCON (TN777B) and PACCON (TN778) circuit packs are removed and replaced by the Network Control/Packet Control Assembly, which consists of the NetPkt circuit pack (TN2401/TN794) inserted into the NETCON slot and the Net/Pak Backplane Connection (TN4200) inserted into the PACCON slot. Upgrades involving new control carriers use the TN2401/TN794 only. Duplicated R8si systems require two of the TN2404/TN790 cards preloaded with 16M DRAM and the program card with R8 software, two TN792 DUPINTS, two sandwich boards (TN2401/TN794 NetPkts and TN2400 combination), and optical cables.

The Switch Control is critical in the setup and take down of all calls but is not involved in the voice or data transmission that takes place during established calls. It is the Switch Control that detects when port circuit packs are plugged into or removed from the PPN cabinet. This information is then sent to the processor. The Switch Control monitors the health of the control channel on the PPN cabinet TDM Bus and informs the processor when errors occur.

The Switch Control contains the hardware Time of Day (TIME-DAY) clock that the system uses for all its date and time information. In addition, the Switch Control also contains hardware to monitor critical system timing signals and informs the processor when these signals fail. For example, if the timing signals from a Tone-Clock circuit pack in the PPN cabinet fail, the Switch Control informs the processor.

Error Log Entries and Test to Clear Values

Table 10-581. SW-CTL Error Log Entries

Error Type	Aux Data	Associated Test	Alarm Level	On/Off Board	Test to Clear Value
0[1]	0	Any	Any	Any	test network-control a/b sh r 1
1	Any	Control Channel Test (#94)	MAJOR	ON	test network-control a/b r 3
2 (a)		Control Channel Test (#94)	MAJOR	ON	test network control a/b r 3
257 (b)	0 1	None			
513 (c)		Time of Day Clock Test (#95)	MINOR	ON	test network-control a/b l r 3
769 (d)	Any	None			
1025		Switch Control Loop Around Test (#92)	MAJOR	ON	test network-control a/b r 3
1281 (e)	Any	None			
1537		Switch Control Reset Test #93	MAJOR	ON	test network-control a/b l r 2
1793 (f)	Any	None			
2817		MCD Loop Around Test (#324)	MAJOR	ON	test network-control a/b r 2
3073		MCD Memory Test (#325)	MAJOR	ON	test network-control a/b r 3
3329 (g)		None	MAJOR	ON	

1 Run the Short Test Sequence first. If all tests pass, run the Long Test Sequence. Refer to the appropriate test description and follow the recommended procedures.

Notes:

a. This error may not cause a Switch Control alarm if Error Type 769 is also present since this error may actually be caused by the loss of clock signals and not by a Switch Control failure.

b. The 257 errors are reported to the processor by the Switch Control and indicate possible hardware problems on the TN2401/TN794 NetPkt or TN777B Netcon circuit pack. The receipt of these errors causes Switch Control maintenance to run specific Switch Control tests. If there really is a problem, the Switch Control tests usually causes other errors to be logged. In the rare case where no other errors are logged but 257 errors are occurring at a high rate (more than 10 in the last hour), the NetPkt or Netcon circuit pack should be replaced at the customer's convenience.

c. If the Aux Data is less than 100, the test may have been interrupted by LMM operations. Wait 1 minute, then test again. Retry the test a maximum of 3 times. If the Aux Data is more than 100 or fails two out of three times with Aux Data less than 100, the NetPkt or Netcon circuit pack needs to be replaced.

d. A 769 error occurs when the Switch Control reports a loss of timing signals to the processor. When this error is present, the Switch Control is usually not alarmed since any Switch Control test failures are really the result of faulty signals from the PPN cabinet Tone-Clock circuit pack. See TDM-CLK (TDM Bus Clock) Maintenance documentation for the procedures needed to diagnose Tone-Clock circuit pack troubles.

e. This error indicates a loss of handshake between SW-CTL and the system software. Look for and resolve all other SW-CTL errors. In the rare case where no other errors are logged, but Error Type 1281 is occurring at a high rate (more than 10 in the previous hour), escalate the problem.

   A loss of handshake can be caused by the TN2404/TN790 Processor circuit pack, the TN2401/TN794 NetPkt (or TN777B Netcon), the TN765 Processor Interface circuit pack, or the M-BUS.

   Follow these repair steps:

   1. Look for and resolve all other SW-CTL errors.
   2. Look for and resolve all other PI-SCI, PI-BD, and PKT-INT errors.
   3. If the error indicates a failure in the NetPkt or Netcon circuit pack, replace the NetPkt or Netcon circuit pack. Boot the system up after the NetPkt or Netcon circuit pack has been inserted successfully into the control carrier. Execute the set time command to program the correct time and date into the time-of-day clock.
   4. If the error of loss of handshake persists after the replacement of the NetPkt or Netcon circuit pack, replace the Processor circuit pack. Refer to the "Software Upgrade" section to load the system software from the Memory Card (J58890TG-1 List 3) with the correct software release into the Processor circuit pack. Boot the system up after the system software is successfully loaded into the Processor circuit pack.

      NOTE:
      If you replace the Processor circuit pack, you need to get a new license file.

5. If the error of loss of handshake persists after the replacement of the NetPkt or Netcon circuit pack, consider the replacement of the control carrier. It's possible that the M-Bus on the backplane of the control carrier may be defective.

   Recommended Repair Kits: Processor circuit pack (TN2404/TN790) with correct software release and Memory Card (J58890TG-1 List 3), NetPkt (TN2401/TN794) or Netcon (TN777B) circuit pack.

f. The Aux Data for this error is not meaningful. The 1793 errors are in-line errors that indicate a possible problem with the interface between the Switch Control and the processor. The receipt of these errors causes Switch Control maintenance to run specific Switch Control tests. If there really is a problem, the Switch Control tests usually causes other errors to be logged. In the rare case where no other errors are logged but 1793 errors are occurring at a high rate (more than 10 in the last hour), the NetPkt or Netcon circuit pack should be replaced at the customer's convenience.

g. This error indicates bad clock detection circuitry on the NetPkt or Netcon circuit pack. Replace the NetPkt or Netcon circuit pack according to the control carrier circuit pack replacement procedures.

System Technician-Demanded Tests: Descriptions and Error Codes

Always investigate tests in the order presented in the table below when inspecting errors in the system. By clearing error codes associated with the *Switch Control Reset Test,* for example, you may also clear errors generated from other tests in the testing sequence.

Order of Investigation	Short Test Sequence	Long Test Sequence	D/ND[1]
Switch Control Reset Test (#93)		X	D
Control Channel Interface Test (#92)	X	X	ND
Control Channel Transmission Test (#94)	X	X	ND
Destructive EPN Maintenance Board Interface Test (#325)		X	D
EPN Maintenance Board Interface Test (#324)	X	X	ND
Time of Day Clock Test (#95)	X	X	ND
Control Channel Loop Around Test (DATA-BD) (#52) (a)	X	X	ND
NPE Audit Test (DATA-BD) (#50) (a)		X	ND
Data Channel Reset Test (DATA-CHL) (#107) (b)		X	D
Data Channel Interface Test (DATA-CHL) (#108) (b)		X	D
Maintenance Loop Around Test (DATA-CHL) (#109) (b)	X	X	ND
Data Channel Crosstalk Test (DATA-CHL) (#110) (b)	X	X	ND
Data Channel Local Loop Back Test (DATA-CHL) (#111) (b)	X	X	ND

1 D = Destructive; ND = Nondestructive

Notes:

a. Refer to DATA-BD (Network Control or NetPkt Circuit Pack) Maintenance documentation for a description of these tests.

b. Refer to DATA-CHL (Network Control or NetPkt Circuit Pack) Maintenance documentation for a description of these tests.

Control Channel Interface Test (#92)

Loop back messages are sent to the Switch Control through the interface used for control channel messages. The messages are returned to the SPE for verification through the same interface.

Table 10-582. TEST #92 Control Channel Interface Test

Error Code	Test Result	Description/Recommendation
2012	ABORT	Internal system error
2013 2100 none	ABORT	Could not allocate the necessary system resources to run this test. 1. Retry the command at 1-minute intervals a maximum of 5 times.
1029 2014 2015 2016 2017 2018 2020 2022 2024 2025 2051	ABORT	Refer to STBY-SPE for a description of these error codes

Continued on next page

Table 10-582. TEST #92 Control Channel Interface Test — *Continued*

Error Code	Test Result	Description/Recommendation
other	FAIL	Messages could not be looped back through the control channel interface. If this is a standard system, the customer probably cannot make or receive calls. 1. This failure could be due to either a NetPkt or Netcon circuit pack failure or the loss of system timing signals. If the Switch Control is alarmed, then suspect a NetPkt or Netcon circuit pack failure. If the Switch Control is not alarmed, investigate the possible loss of system timing signals before replacing the NetPkt or Netcon circuit pack. Test #94 also fails if the system timing signals are lost. If Test #94 passes, do not suspect the loss of timing signals. 2. Run the Short Test Sequence several times to make sure that this failure is occurring consistently, run the Long Test Sequence to reset the Switch Control. Sometimes running the Long Test Sequence may clear the problem. If the test is still failing, proceed to Step 3 or 4. 3. If the system can process calls, replace the NetPkt or Netcon board. 4. If calls cannot be made, replace the NetPkt or Netcon board immediately.
	PASS	The control channel interface between the processor and the Switch Control is working correctly.

Switch Control Reset Test (#93)

This test is destructive.

This test resets the Switch Control and determines if it can successfully go through its initialization sequence. The test is destructive since there is the possibility of losing some control messages to or from port circuit packs.

Table 10-583. TEST #93 Switch Control Reset Test

Error Code	Test Result	Description/Recommendation
2012	ABORT	Internal system error
2013 2100 none	ABORT	Could not allocate the necessary system resources to run this test. 1. Retry the command at 1-minute intervals a maximum of 5 times.
1029 2014 2015 2016 2017 2018 2020 2022 2024 2025 2051	ABORT	Refer to STBY-SPE for a description of these error codes
2000 or None	FAIL	The Switch Control could not be successfully reset. If this is a standard system, the customer probably cannot make or receive calls. 1. This failure could be due to either a NetPkt or Netcon circuit pack failure or the loss of system timing signals. If the Switch Control is alarmed, then suspect a NetPkt or Netcon circuit pack failure. If the Switch Control is not alarmed, investigate the possible loss of system timing signals. See “TDM Bus Clock”. If many port circuit pack LEDs are lit, suspect a TDM Bus Clock problem. If only the NetPkt or Netcon circuit pack LED is lit, suspect the NetPkt or Netcon circuit pack. If the NetPkt or Netcon circuit pack is determined to be at fault, proceed to Step 2. 2. If calls cannot be made, replace the NetPkt or Netcon board.
	PASS	The Switch Control has initialized correctly. Look at results of the other tests to see if it is operating correctly.

Control Channel Transmission Test (#94)

Control channel messages are sent from the SPE to selected port circuit packs and the response from the port circuit packs is checked. This tests the ability of the Switch Control to send and receive messages on the control channel of the TDM Bus.

This test cannot run on the Standby SPE Switch Control. Therefore, it is possible to have defective hardware on the Standby NetPkt or Netcon circuit pack that is not detectable.

Table 10-584. TEST #94 Control Channel Transmission Test

Error Code	Test Result	Description/Recommendation
0	ABORT	The port circuit packs necessary for this test are not available. 1. Retry the command at 1-minute intervals a maximum of 5 times. 2. If the test continues to abort, then replace the NetPkt or Netcon circuit pack.
1030	ABORT	The Switch Control on the Standby SPE is being tested 1. For recommended maintenance procedure, refer to ABORT Error Code 1030 in STBY-SPE Maintenance documentation.
2012	ABORT	Internal system error
2013 2100 none	ABORT	Could not allocate the necessary system resources to run this test. 1. Retry the command at 1-minute intervals a maximum of 5 times.

Continued on next page

Table 10-584. TEST #94 Control Channel Transmission Test — *Continued*

Error Code	Test Result	Description/Recommendation
1029 2014 2015 2016 2017 2018 2020 2022 2024 2025 2051	ABORT	Refer to STBY-SPE for a description of these error codes
0	FAIL	The Switch Control cannot communicate on the TDM Bus control channel. The customer probably cannot make or receive calls. 1. Run the Short Test Sequence several times to make sure this failure is occurring consistently, run the Long Test Sequence to reset the Switch Control. Sometimes, running the Long Test Sequence may clear the problem. *Remember that the Long Test Sequence is destructive.* Placing and receiving calls is affected for several seconds. 2. If there are no TDM Bus alarms against the Standby TDM Bus, switch the control channel from its current bus to the Standby bus. If this test passes on the new bus, investigate the possibility of TDM Bus failures. If the test fails even after the control channel is switched to the standby TDM Bus, proceed to Step 3 3 or 4. 3. If the system is still able to process calls, replace the NetPkt or Netcon circuit pack at the customer's convenience (Standard system) or right away (High or Critical Reliability system). 4. If calls cannot be made, replace the NetPkt or Netcon circuit pack immediately.
	PASS	The Switch Control can communicate with the port circuit packs over the TDM Bus.

Time of Day Clock Test (#95)

The short term accuracy of the Time of Day (TIME-DAY) clock is tested. The test reads the clock once, waits a short time, and reads the clock again. The second reading of the clock must be within certain limits relative to the first reading for the test to pass. The **display time** command can be used to display the current setting of the TIME-DAY clock.

Table 10-585. TEST #95 Time of Day Clock Test

Error Code	Test Result	Description/Recommendation
1000	ABORT	The test was interrupted by a higher priority task. 1. Rerun the test at 1-minute intervals a maximum of 5 times. 2. If the test aborts 5 times, wait until the system is less heavily used and rerun the test at that time.
1029 2014 2015 2016 2017 2018 2020 2022 2024 2025 2051	ABORT	Refer to STBY-SPE for a description of these error codes
2012	ABORT	Internal system error
2013	ABORT	Could not allocate the necessary system resources to run this test. 1. Retry the command at 1-minute intervals a maximum of 5 times.
2001	FAIL	The Time of Day clock could not be read. 1. Run the **set time** command and set the time to the current time. 2. Run the Short Test Sequence several times to determine if setting the time corrected the error. Proceed to Step 3 if the error is still occurring. 3. Replace the NetPkt or Netcon circuit pack at the customer's convenience (Standard system) or right away (High or Critical Reliability system).

Continued on next page

Table 10-585. TEST #95 Time of Day Clock Test — *Continued*

Error Code	Test Result	Description/Recommendation
other	FAIL	The accuracy of Time of Day clock is not within limits. 1. Run the Short Test Sequence several times to make sure the error is occurring consistently. 2. Replace the NetPkt or Netcon circuit pack at the customer's convenience (Standard system) or right away (High or Critical Reliability system).
	PASS	The Time of Day clock on the Switch Control circuit pack is operating correctly.

Switch Control EPN Maintenance Board Interface Test (#324)

Loopback messages are sent to the Switch Control through the interface used for EPN maintenance circuit pack messages. The messages are returned to the SPE for verification through the same interface.

Table 10-586. TEST #324 Switch Control EPN Maintenance Board Interface Test

Error Code	Test Result	Description/Recommendation
1005	ABORT	The system does not contain an EPN, so this test is not executed.
1030	ABORT	The component on which the test was to be run is on the Standby SPE. This test may only be run on this component when it resides on the Active SPE. 1. For recommended maintenance procedure, refer to ABORT Error Code 1030 in STBY-SPE Maintenance documentation.
32400	ABORT	Test disabled through software patch.

Continued on next page

Table 10-586. TEST #324 Switch Control EPN Maintenance Board Interface Test — *Continued*

Error Code	Test Result	Description/Recommendation
2012 32413 32416 32423 32425	ABORT	Internal system error
2013 32411 32421	ABORT	Could not allocate the necessary system resources to run test. 1. Retry the command at 1-minute intervals a maximum of 5 times.
32414 32417 32424 32427	ABORT	The messages failed to return (timed out) and were not verified. 1. Retry the command at 1-minute intervals a maximum of five retries. 2. If the test continues to abort and SW-CTL Test #325 passes, there is not a problem, but if SW-CTL Test #325 fails, follow the recommendations for SW-CTL Test #325.
1029 2014 2015 2016 2017 2018 2020 2022 2024 2025 2051	ABORT	Refer to STBY-SPE for a description of these error codes.

Continued on next page

Table 10-586. TEST #324 Switch Control EPN Maintenance Board Interface Test *— Continued*

Error Code	Test Result	Description/Recommendation
	ABORT	Refer to STBY-SPE for a description of these error codes.
any	FAIL	This failure indicates that communications with the Maintenance circuit pack in the EPN is probably not possible. The EPN Manager I may not be usable. 1. Run the Short Test Sequence several times to make sure the error is occurring consistently, run the Long Test Sequence to reset the Switch Control. Sometimes running the Long Test Sequence may clear the problem. Remember the Long Test Sequence is **destructive**. Placing and receiving calls is affected for several seconds. 2. Replace the NetPkt or Netcon circuit pack whenever it is convenient for the customer (unduplicated system) or right away (High or Critical Reliability system).
	PASS	The EPN Maintenance circuit pack interface between the processor and the Switch Control is working correctly. Test #325 is a more thorough test of this interface but it is **destructive**.

Switch Control Destructive EPN Maintenance Board Interface Test (#325)

This test is destructive.

This test writes test patterns into the EPN Maintenance circuit pack interface and verifies that it can read back these test patterns successfully. Messages to or from the EPN Maintenance circuit pack can be lost when this test is run.

Table 10-587. TEST #325 Switch Control Destructive EPN Maintenance Board Interface Test

Error Code	Test Result	Description/Recommendation
1005	ABORT	The system does not contain an EPN so this test is not executed.
32500	ABORT	Test disabled through software patch.
2013 32511	ABORT	Could not allocate the system resources to run for this test.
2012 32513 32514	ABORT	Internal system error 1. Retry the command at 1-minute intervals a maximum of 5 times.
1029 2014 2015 2016 2017 2018 2020 2022 2024 2025 2051	ABORT	Refer to STBY-SPE for a description of these error codes.
32515	FAIL	This failure indicates that communications with the Maintenance circuit pack in the EPN is probably not possible. The EPN management terminal may not be usable. 1. Run the Long Test Sequence several times to make sure the error is occurring consistently. Remember the Long Test Sequence is **destructive**. Placing and receiving calls is affected for several seconds. 2. Replace the NetPkt or Netcon circuit pack.
	PASS	The EPN Maintenance circuit pack interface between the processor and the Switch Control is working correctly.

SYNC (Synchronization)

MO Name (in Alarm Log)	Alarm Level	Initial Command to Run	Full Name of MO
SYNC	MAJOR	display errors	Synchronization Maintenance
SYNC	MINOR	display errors	Synchronization Maintenance
SYNC	WARNING	test synchronization	Synchronization Maintenance

The Synchronization Maintenance is composed of both hardware and software components and its purpose is to provide a common reference frequency for reliable digital communication between systems and other PBXs, COs or CPE. Synchronization is achieved via the use of several system components which include the Tone-Clock, the DS1 Interface, and the Expansion Interface circuit packs. Synchronization is achieved between the PPN and the EPNs via the Expansion Interface Link (EXP-LINK) between the networks.

Depending on the network synchronization plan and the status of synchronization sources, the system timing reference may be a Tone-Clock circuit pack, DS1 interface circuit packs or an external Stratum 3 clock. Stratum 4 synchronization extracts timing information directly from a DS1 reference or from a Tone-Clock. Stratum 3 synchronization requires the use of a Stratum 3 clock which provides a timing signal, derived from DS1 references, to the TN780 Tone-Clock circuit pack. The external Stratum 3 clock is a more stable timing source than the Stratum 4 clock and provides 24-hour holdover in case of reference failures. The Stratum 3 clock has redundant components.

Stratum 4 Synchronization

The system can be configured with primary and secondary synchronization references (DS1 interface circuit packs) when using Stratum 4 synchronization. Both references are optional (since the local oscillator can be used), and the secondary reference is optional if a primary is provided. If this system is the master for the network, then its local oscillator would be used and no DS1s would be used as references.

If the primary synchronization reference is not providing a valid timing signal, the system automatically switches to the secondary synchronization reference. If the secondary reference does not provide a valid timing signal or is not administered as a synchronization reference, a Tone-Clock circuit pack provides the system timing source. The system does not revert to the primary if the current reference is the secondary and is failing; however the system switches from the local oscillator to another reference when the new reference becomes available. The following diagram should assist in understanding Stratum 4 Synchronization Maintenance components within the system. This diagram depicts a possible Generic 1.2 configuration; DEFINITY Generic 1 does not support two EPNs, but the operation and maintenance described below is the same except for the references to multiple EPNs.

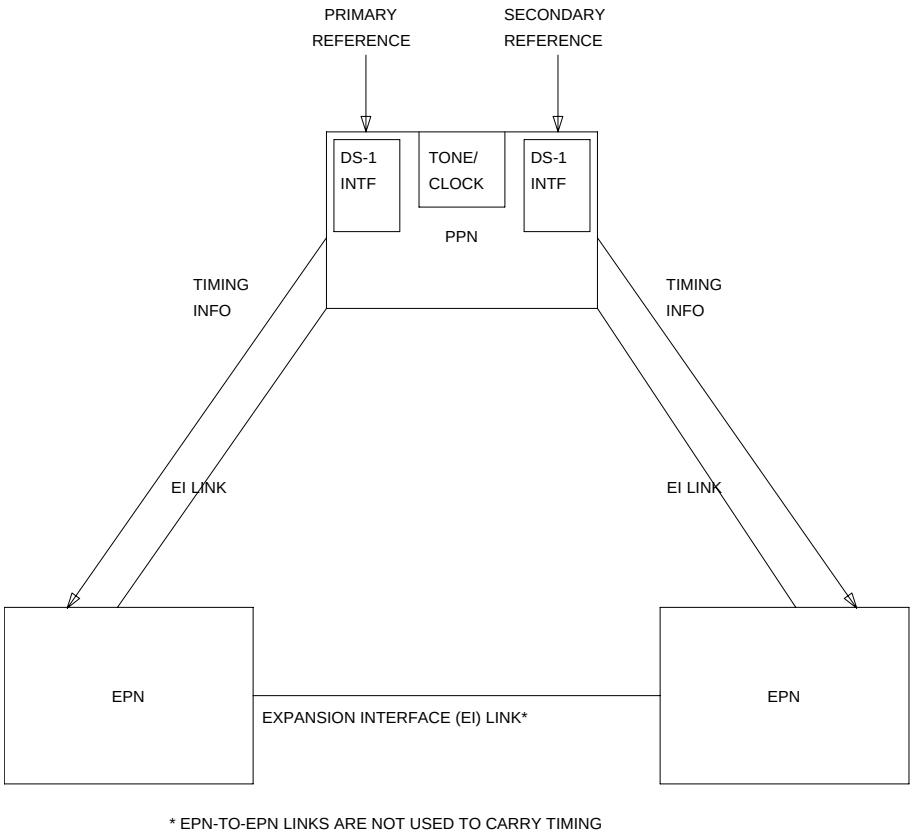

Figure 10-91. Typical Stratum 4 Synchronization Configuration

If the primary synchronization reference in the previous diagram is providing a valid timing signal, then the flow of system synchronization would travel from the DS1 interface circuit pack in the PPN across the active Expansion Interface fiber link to the two EPNs. The PPNDS1 interface circuit pack provides a timing signal for the PPN Tone-Clock circuit pack and the PPN Tone-Clock circuit pack provides timing for all circuit packs in the PPN. The PPN Expansion Interface circuit pack uses the timing generated by the Tone-Clock circuit pack to generate a data stream which is sent across the Expansion Interface link to the Expansion Interface circuit packs in the two EPNs. The EPN Expansion Interface circuit pack uses the received data stream to generate a timing signal. The Tone-Clock circuit pack in the EPNs uses this signal to generate timing for all the circuit packs in their respective EPNs. The PPN, in the above mentioned scenario, is designated the *master* port network and the EPNs are called *slave* port networks. The *master* port network is defined as the port network that contains the system synchronization source. If the primary synchronization reference does not provide a valid timing signal, Synchronization Maintenance switches to the secondary reference. **Both the primary and secondary references must reside in the**

same port network, but there is no restriction as to in which port network both must reside (that is, both references may be in an EPN). The recommended placement of the references is in the PPN.

There are two kinds of Stratum 4 synchronization that are supported: Type I and Type II. Stratum 4 type I is more stable than Type II and provides some switching capability at the hardware level. Stratum 4 Type II operation is the only synchronization strata provided by Generic 1. It is important to note that Stratum 4 Type I operation is not possible when one or both of the DS1 interface circuit packs providing the reference sources is a TN722. Both must be the TN767 or TN464 (suffix C or higher).

Stratum 3 Synchronization

The following diagram may help you to understand the synchronization components needed for Stratum 3 synchronization.

NOTE:
This is only one possible configuration.

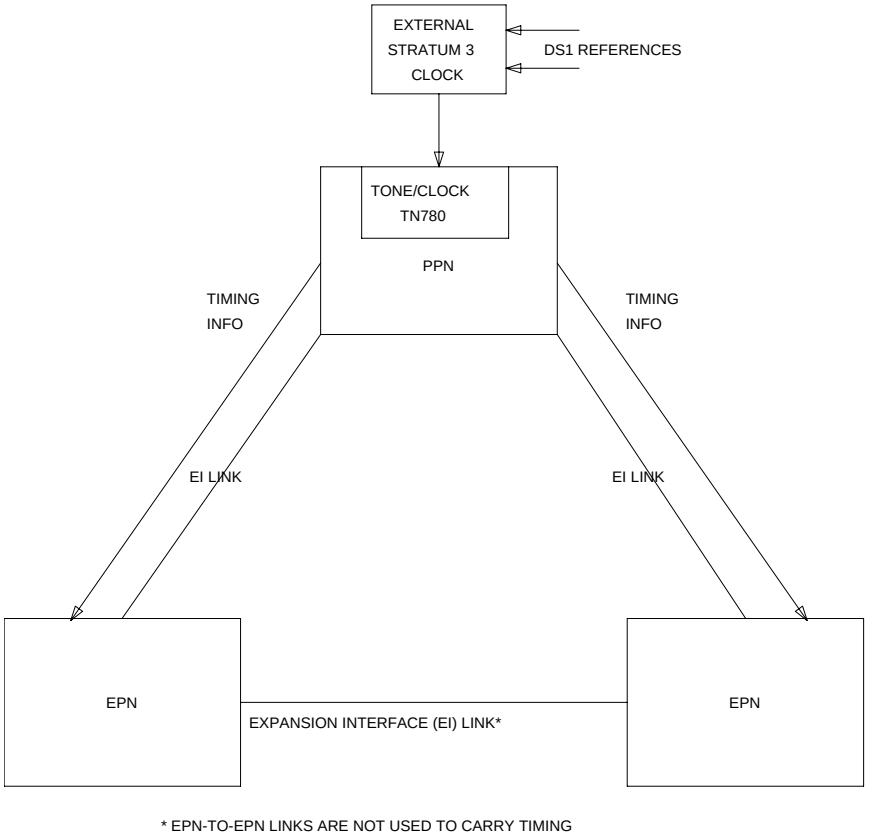

Figure 10-92. Example Stratum 3 Synchronization Configuration

For Stratum 3 synchronization, an external clock provides a timing signal to a TN780 Tone-Clock circuit pack, and the TN780 provides timing to all circuit packs in the port network in which the TN780 resides (that is, the PPN in the previous diagram). The PPN Expansion Interface circuit pack uses the timing generated by the TN780 to generate a data stream which is sent across the two Expansion Interface Links to the two EPNs to the EPN Expansion Interface circuit packs. The EPN Expansion Interface circuit packs use the received data stream to generate a timing signal which is used by the Tone-Clock circuit packs in the EPNs to provide timing for all circuit packs in both EPNs. (The Tone-Clock circuit pack is not necessarily a TN780; only the Tone-Clock circuit pack connected to the external Stratum 3 clock must be a TN780.) The PPN, in the above mentioned scenario, is designated the *master* port network and the EPNs are called *slave* port networks. The *master* port network is defined as the port network whose Tone-Clock is connected to the Stratum 3 clock.

NOTE:
The Stratum 4 equipment (usually a PBX) should never provide timing to a Stratum 3 PBX.

NOTE:
The external Stratum 3 clock may be connected to the TN780 Tone-Clock in any port network. However, it is recommended that it be connected to the PPN.

Synchronization Troubleshooting

For both Stratum 3 and 4 operation, major and minor alarms indicate that there is a problem with the system synchronization references. These alarms are resolved when the alarmed synchronization reference is restored.

The **status synchronization** and **display synchronization** commands are used to determine the current system synchronization reference and the primary and secondary references that are administered respectively.

Other commands associated with Synchronization Maintenance are **disable synchronization-switch** and **enable synchronization-switch.** These commands are used to disable the ability of Synchronization Maintenance to switch between synchronization references and to enable this switching ability, respectively. The **set synchronization** command is executed only after synchronization has been disabled and is used to manually switch to a specific synchronization reference. This command is useful to diagnose synchronization problems by forcing a specific reference (DS1 or Tone-Clock) to be the system synchronization reference to determine if a specific reference is providing a valid timing signal. For Stratum 3 operation, only a TN780 Tone-Clock circuit pack may be specified. To switch synchronization to the Stratum 3 clock, use the **enable synchronization-switch** command after verifying that the Stratum 3 clock is wired correctly.

The system synchronization planner must avoid creating a *timing loop* when administering the primary and secondary synchronization references in a system. A timing loop exists whenever a system receives timing from another system whose timing reference is directly or indirectly derived from itself. Timing loops can lead to loss of digital data between systems that are exchanging data with any system within the loop. An invalid timing signal is also generated by any system within the loop, thus propagating the invalid timing signal to any system(s) using a system within the loop as a synchronization reference. Figure 10-93 on page 10-1591 shows a timing loop and a correct distribution of timing between the systems.

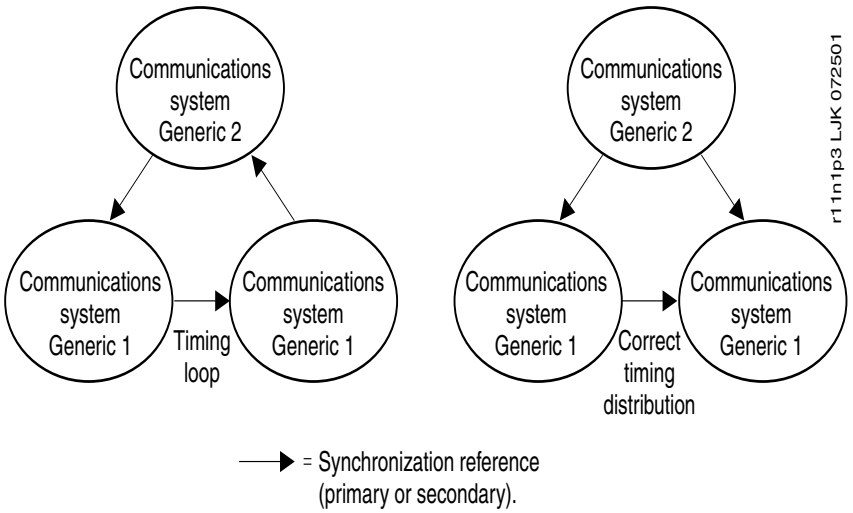

Figure 10-93. Synchronization Timing Loop

A correctly designed network has no loops and each piece of equipment in the network is supplied by a clock of equal or lower stratum (that is, the inputs to a Stratum 3 clock should NEVER be from a Stratum 4 device). **It is strongly recommended that the network administrator be consulted before administering any synchronization changes.**

The yellow LEDs of the TN768 and 780 Tone-Clock circuit packs flash in a specific pattern to indicate the status of the circuit pack. These flashing LED patterns are used to indicate if a Tone-Clock circuit pack is deriving timing from an external source or whether the Tone-Clock circuit pack is providing the timing signal for the port network. The yellow LED patterns for the TN768 and 780 Tone-Clock circuit packs are as follows:

1. Yellow LED is on 2.7 seconds and off 0.3 seconds—This light pattern indicates that an external timing source is being used as a synchronization reference and the circuit pack is in Active mode.
2. Yellow LED is on 0.3 seconds and off 2.7 seconds—This light pattern indicates that the local oscillator on the Tone-Clock circuit pack is being used as a synchronization reference and the circuit pack is in Active mode.
3. Yellow LED stays on—This light pattern indicates that the circuit pack has been reset but no translation has been downloaded. This pattern indicates the circuit pack is providing clocks and is in Active mode.
4. Yellow LED off is an indication that the Tone-Clock circuit pack is in Standby mode (neither generating tones nor supplying clocks).

5. The following two patterns may occur when the circuit pack is either in Active or Standby mode. The best approach to determine the mode of the circuit pack is to use the **status system** system technician command.
   - Maintenance running on the Standby circuit pack is indicated by the following pattern (yellow and green LEDs flashing): LED on 0.1 seconds, off for 0.2 seconds, on for 0.1 seconds, off for 0.4 seconds, on for 0.4 seconds, off for 0.4 seconds.
   - Green flashing and yellow flashing in a pattern different than the previously mentioned pattern indicates that maintenance is running on the Active circuit pack.

Error Log Entries and Test to Clear Values

Table 10-588. Synchronization Error Log Entries

Error Type	Aux Data	Associated Test	Alarm Level	On/Off Board	Test to Clear Value
0[1]	0	Any	Any	Any	test synchronization
1 (a)[1]	Any	None	WARNING/ MINOR(j)[2]	OFF	None
18 (b)	0	disable sync	WARNING	OFF	enable sync
257 (c)[1]	Any	None	WARNING/ MINOR(j)[2]	OFF	None
513 (d)[1]	Any	None	WARNING/ MAJOR(j)[2]	OFF	None
769 (e)		None	MAJOR/ WARNING[3]	OFF	None
1793 (f)[4]	0-50	None	MAJOR/ WARNING	OFF	enable sync
2049 (g) (i)[4]	0	None	WARNING	OFF	None
2305 (h) (i)[4]	0	None	WARNING	OFF	None

1 Run the Short Test Sequence first. If all tests pass, run the Long Test Sequence. Refer to the appropriate test description and follow the recommended procedures.

2 This error type initially raises a Warning alarm. If this error type persists and alarms are not downgraded on this MO due to the value of **set options**, then, after a period of time, a Minor or Major alarm is raised.

3 Major alarms on this MO may be downgraded to Warning alarms based on the value used in the **set options** command.

4 It may take up to one hour for these SYNC alarms to clear due to “leaky bucket” strategy.

Notes:

a. This error indicates a problem with the primary DS1 reference. It is cleared when the primary reference is restored. The following steps should give an indication of the source of the problem:

   1. Check if the primary DS1 interface circuit pack is inserted in the carrier via the **list configuration board PCSS** command.
   2. Check the connection of the cable supplying the external timing source to the primary DS1 interface circuit pack.
   3. Test the primary DS1 interface circuit pack via the **test board PCSS long** command. Check the Error Log for DS1-BD errors and refer to the DS1-BD (DS1 Interface Circuit Pack) Maintenance documentation to resolve any errors associated with the primary DS1 interface circuit pack. If no errors are listed in the Error Log for the primary DS1 interface circuit pack, continue with the following steps.
   4. Test the active Tone-Clock circuit pack in the master port network via the **test tone/clock PC long** command. Check the Error Log for TDM-CLK errors and verify that TDM Bus Clock Test #148 passes successfully. If Test #148 fails with an Error Code 2 through 32, refer to “TDM-CLK” to resolve the problem. If not, continue with the following steps.
   5. Execute the **disable synchronization-switch** and the **enable synchronization-switch** commands. These two commands (when executed together) switch the system synchronization reference to the primary DS1 interface circuit pack. Check the Error Log and execute the **status synchronization** command to verify that the primary DS1 interface circuit pack is still the system synchronization reference. If the primary DS1 interface circuit pack is not the system synchronization reference, and this is not a High or Critical Reliability system, continue with the following step.
   6. **High or Critical Reliability system:**

      Switch Tone-Clock circuit packs on the master port network via the **set tone/clock PC** command, and repeat the disable/enable commands described in the previous step.

b. This error indicates that Synchronization Maintenance has been disabled via the **disable synchronization-switch** command. Execute the **enable synchronization-switch** command to enable Synchronization Maintenance reference switching and to resolve this alarm.

c. This error indicates a problem with the secondary DS1 reference. It is cleared when the secondary reference is restored. Refer to note (a) to resolve this error substituting **secondary** for **primary** in the preceding resolution steps.

d. This error indicates that the Tone-Clock circuit pack is providing the timing source for the system. The primary and secondary (if administered) are not providing a valid timing signal. Investigate errors 1 and 257 to resolve this error.

e. This error indicates that the external Stratum 3 Clock fails to provide the system timing reference. Refer to Stratum 3 Clock Maintenance document to resolve the defective synchronization reference.

   This error indicates excessive switching of system synchronization references has occurred. When this error occurs, synchronization is disabled and the Tone-Clock circuit pack (in the master port network) becomes the synchronization reference for the system. Execute the following steps to resolve this error:

   1. Check for timing loops and resolve any loops that exist.
   2. Test the active Tone-Clock circuit pack in the master port network via the **test tone/clock PC long** command. Check the Error Log for TDM-CLK errors and verify that TDM Bus Clock Test #148 passes successfully. If Test #148 fails with an Error Code 2 through 32, refer to the TDM-CLK (TDM Bus Clock) Maintenance documentation to resolve the problem. If not, continue with the following steps.
   3. **High or Critical Reliability system:** Switch Tone-Clock circuit packs on the master port network via the **set tone/clock PC** command.

      Standard system: Replace the primary and secondary (if administered) DS1 Interface circuit packs.
   4. Check for an error logged against the primary or secondary DS1 board. If there is an error, follow the DS1 section to resolve the errors. If there is not, enter **enable sync**, and wait for two to five minutes for the primary sync source to come on-line.

      In Release 5si + memory: This error indicates that some reference switches have occurred. If there is not a major SYNC alarm, then investigate other SYNC errors. If there is an active major SYNC alarm, and if this is not a Stratum 3 system, then follow the steps above.

f. This error indicates that the Expansion Interface Link is experiencing timing slips. The two port networks are not synchronized. This error increases the bit error rates for data transmission between port networks. Verify that all the TDM/LAN Bus cables on the backplane are AT&T Parts number AT&T SK00199-001 rather than flat ribbon cables. Also, check that the bus terminators are the ZAHF V1 TDM/LAN Bus Terminator type. Refer to note (i) for error resolution steps.

   This error is cleared by a leaky bucket strategy and takes one hour to clear (leak away) the error counter once it is alarmed. Therefore, it may take up to one hour to clear the alarm after the problem is cleared.

g. This error indicates that the slave Tone-Clock circuit pack is experiencing loss of signal. Refer to note (i) for error resolution steps.

h. The following steps should be executed to resolve error 2049 and 2305:

1. Check for timing loops, and resolve any loops that exist.
2. Check the Error Log for any active as well as resolved Expansion Interface circuit pack errors and refer to EXP-INTF (Expansion Interface Circuit Pack) Maintenance documentation to resolve any errors found.
3. **High or Critical Reliability system:**
   - Switch Tone-Clock circuit packs in the slave port network via the **set tone/clock PC** system technician command. The error count for this particular error should start decrementing once the problem is solved—if the count does not decrease in 15 minutes the problem still persists.
   - If the problem still persists, switch the Tone-Clock in the slave port network back to the previous configuration. Then, switch Expansion Interface Links via the **set expansion-link PCSS** command.
   - If the problem still persists, switch the Expansion Interface Links back to the previous configuration via the **set expansion-link PCSS**. Then, switch the Tone-Clock circuit packs in the master port network.
   - If the problem still persists, switch the Tone-Clock circuit packs in the master port network back to the previous configuration. If the system synchronization reference is a Tone-Clock circuit pack, follow normal escalation procedures. If the system synchronization reference is a DS1 interface circuit pack, administer a different DS1 interface circuit pack as the primary synchronization reference.
4. **Standard system:**—Error 2049:
   - Test the Tone-Clock circuit packs in the master and slave port networks via the **test tone/clock PC long** command. Check the Error Log for TDM-CLK errors and verify that TDM Bus Clock Test #148 passes successfully. If Test #148 fails with an Error Code 2 through 32, refer to “TDM-CLK” to resolve the problem. If not, continue with the following steps.
   - If the master and slave Tone-Clock circuit packs **do not** fail TDM Bus Clock Test #150 (PPM Inquiry), replace the Expansion Interface circuit packs in the system.
   - If the system synchronization reference is a Tone-Clock circuit pack and the master Tone-Clock circuit pack fails TDM Bus Clock Test #150, follow the steps listed in “TDM-CLK” to replace the master Tone-Clock circuit pack.

- If the system synchronization reference is a DS1 interface circuit pack and the master Tone-Clock circuit pack fails TDM Bus Clock Test #150, the primary or secondary (if administered) synchronization references are not providing valid timing signals for the system. Check the system synchronization references administered, and follow the steps outlined in note (a) if the primary synchronization reference is providing timing for the system or note (c) if the secondary synchronization reference is providing timing for the system.
- If the slave Tone-Clock circuit pack fails the TDM Bus Clock Test #150 but the master Tone-Clock **does not** fail this test, the master Tone-Clock circuit pack must be replaced. Follow the Tone-Clock replacement steps listed in the “TDM-CLK”.

  If SLIP errors remain follow SLIP ANALYSIS.

5. **Standard system:**—Error 2305:
   - Replace the Expansion Interface circuit pack in this port network and the Expansion Interface circuit pack in the PPN that is connected to this port network.
   - If the problem persists, replace the Tone-Clock circuit pack in the slave port network. Follow the steps listed in “TDM-CLK” to replace the Tone-Clock circuit pack.

i. Noise on the DS1 line can cause transient alarms on synchronization. Therefore, when a synchronization problem occurs causing error types 1, 257, or 513, a WARNING alarm is first raised for 15 to 20 minutes before the alarm is upgraded to a MAJOR or MINOR alarm.

System Technician-Demanded Tests: Descriptions and Error Codes

Always investigate tests in the order presented in the table below. By clearing error codes associated with the *Test Synchronization Test,* for example, you may also clear errors generated from other tests in the testing sequence.

Order of Investigation	Short Test Sequence	Long Test Sequence	D/ND[1]
Test Synchronization Test (#417)	X	X	ND

1 D = Destructive; ND = Nondestructive

Test Synchronization Test (#417)

This test updates all the Synchronization Maintenance component circuit packs with the correct information regarding their role in providing synchronization for the system. All the Tone-Clock, Expansion Interface, and DS1 Interface circuit packs in the system are updated via this test. This test will either pass or abort.

Table 10-589. TEST #417 Test Synchronization Test

Error Code	Test Result	Description/Recommendation
	ABORT	Internal system error 1. Retry the command at 1-minute intervals a maximum of 5 times.
	PASS	The Synchronization Maintenance component circuit pack parameters have been successfully updated. The system should be synchronized after successful execution of this test. If synchronization problems still exist, refer to the Error Log to obtain information regarding the source of the problem.

SYS-LINK (System Links)

MO Name (in Alarm Log)	Alarm Level	Initial System Technician Command to Run	Full Name of MO
SYS-LINK	WARNING	test sys-link PCSSpp	SYSTEM LINKS

System Links are packet links that originate at the Packet Interface board and traverse various hardware components to specific endpoints. The hardware components involved on the forward and reverse routes can be different, depending upon the configuration and switch administration. This software release supports the following link types:

PRI	ISDN PRI D-Channel Link terminating at a Universal DS1 board
RSCL	Remote Socket Control Link for C-LAN
RSL	Remote Socket Link for C-LAN

Recording System Link Events

The system links maintenance object is used to record all errors encountered on the links. Most of these events are not extra-ordinary, unless they occur with an alarming frequency. The events are logged as they occur, so as to leave a trail helping analyze abnormal behavior exhibited by the endpoints attached to the links or the links themselves.

When a link goes down, a WARNING alarm is raised immediately. Other alarming conditions which do not cause the link to go down also get a WARNING alarm.

Identifying a System Link

In order to trace problems associated with a system link, it is necessary to find its location. A PRI link can be uniquely identified by its endpoints.

Display Errors/Alarms

The output of the **display errors** or **display alarm** commands shows the location of the system link for entries with a Maintenance Name of SYS-LINK. You can restrict the scope of the output of these commands by specifying category **sys-link** on the input form. The link type is listed under the Alt Name field.

List sys-link

The command **list sys-link** lists all system links present in the system. The location of the system link and the link type are displayed for each link.

Common procedure for repairing link problems

The state of a system link is dependent on the state of the various hardware components that it travels over. To resolve any problems associated with a system link, use the following procedure.

The switch maintains a list of hardware components over which the link travels called the hardware path. There are two hardware paths, the current hardware path and the faulted hardware path for each of the system links. The current hardware path is present only for those links that are currently up. When a link is down, the current hardware path is empty. The faulted hardware path, is always present once the link has gone down and is *not cleared when the link subsequently recovers.* The faulted path preserves the path that the link traversed when it last went down. The time at which the faulted path was last recorded is preserved and is accessible through the **status sys-link** location and **list sys-link** commands. Therefore, the focus of attention for problems which do not involve a link that is down, is the current hardware path. If the link is down, faulted hardware path is the focus of attention.

The command **status sys-link** location will present the state of both the hardware paths (current and faulted) along with the state of each of the components in the hardware path. When analyzing any system link problem, look for alarms on the components listed under desired hardware path. If any alarms are present, then follow the maintenance procedures for the alarmed components to clear those alarms first.

When all the components are alarm free, wait for 3 minutes to allow the links to recover. Test the system link through **test sys-link PCSSpp long clear** and notice any tests that fail. If any failures are found, fix the problems indicated by the tests and repeat the procedure.

Error Log Entries and Test to Clear Values

Table 10-590. SYS-LINK Error Log Entries

Error Type	Aux Data	Associated Test	Alarm Level	On/Off Board	Test to Clear Value
13 (a)		System Link Status (985)	WARNING	OFF	
257 (b)			WARNING	OFF	test sys-link PCSSpp l cl
513 (c)			WARNING	OFF	test sys-link PCSSpp l cl
772 (d)			WARNING	OFF	test sys-link PCSSpp l cl
1025 (e)			WARNING	OFF	test sys-link PCSSpp l cl
1281 (f)			WARNING	OFF	test sys-link PCSSpp l cl

Continued on next page

Table 10-590. SYS-LINK Error Log Entries — *Continued*

Error Type	Aux Data	Associated Test	Alarm Level	On/Off Board	Test to Clear Value
1537 (g)			WARNING	OFF	test sys-link PCSSpp l cl
1793 (h)			WARNING	OFF	test sys-link PCSSpp l cl
2049 (i)			WARNING	OFF	test sys-link PCSSpp l cl

Notes:

a. Error Type 13: indicates that the link went down. The link may have gone down or never come up. Enter command **status sys-link location** and check the value of the field `Faulted Path`. If the value is `default`, then the link never came up. If the value is `present`, then the link came up and went down.

   Follow the Common Procedure described above. Wait for 3 min before checking the link state. Repeat the procedure until there are no problems with the components.

b. Error Type 257: indicates that the link has experienced uplink flow control. Manifest effect of this error is that the end-point may be hyperactive. The system link is alarmed if 4 or more errors of this type are detected within 10 minutes.

   To correct the problem, follow the Common Procedure described above. Clear errors and wait for 10 minutes.

c. Error Type 513: indicates that the link has experienced downlink flow control. Manifest effect of this error is that some information packets from the packet interface board have been lost. The link is reset on first occurrence, hence, Error 1025 will also be logged. The system link is alarmed if 2 or more errors of this type are detected within 10 minutes.

   To correct the problem, follow the Common Procedure described above. Clear errors and wait for 10 minutes.

d. Error Type 772: indicates that the link experienced a temporary disconnect due to excessive resets or state transitions. The effect of this error is that the link is taken down and then brought up again. The system link is alarmed if 2 or more errors of this type are detected within 10 minutes.

   To correct the problem, follow the Common Procedure described above. Clear errors and wait for 10 minutes.

e. Error Type 1025: This error indicates that the link has been reset. Manifest effect of this error is that information packets queued at the time of reset are been lost. The system link is alarmed if 20 or more errors of this type are detected within 10 minutes.

To correct the problem, follow the Common Procedure described above. Clear errors and wait for 10 minutes.

f. This error indicates that the link has experienced slow transmit rate due to remote endpoint being busy. Manifest effect of this error is that the end-point location may experience slower throughput rate and/or noisy transmission. The system link is alarmed if 4 or more errors of this type are detected within 10 minutes.

   To correct the problem, ensure that the remote endpoint is functioning properly. If the problem persists, follow the Common Procedure described above. Clear errors and wait for 10 minutes.

g. This error indicates that the link has experienced slow transmit rate due to excessive retransmission. Possible causes for this error may be that the switch is overrunning the end-point or that the end-point is sick. Manifest effect of this error is that the end-point location may experience slower throughput rate. The system link is alarmed if 4 or more errors of this type are detected within 10 minutes.

   To correct the problem, follow the Common Procedure described above. Clear errors and wait for 10 minutes.

h. This error indicates that the link has experienced slow transmit rate due to unknown causes. Manifest effect of this error is that the end-point location may experience slower throughput rate and the Packet Interface may experience backup or congestion. The system link is alarmed if 4 or more errors of this type are detected within 10 minutes.

   To correct the problem, follow the Common Procedure described above. Clear errors and wait for 10 minutes.

i. This error indicates that the link has transmitted an excess amount of packets. The transmit buffers of this link have been purged. The system link is alarmed if 4 or more errors of this type are detected within 10 minutes.

   To correct the problem, follow the Common Procedure described above. Clear errors and wait for 10 minutes.

System Technician-Demanded Tests: Descriptions and Error Codes

Testing for system links is different from the standard test procedures for maintenance objects. In addition to testing the system link maintenance object, the user is allowed to test all the components in the path of the system link. There are two paths preserved for the link. The current path, if present, represents the path traversed by the link currently. This path will not be present when the link is down. The other path, the faulted path is present if the link has ever gone down or never come up. If the link came up and went down, then the faulted path is marked “Present”. If the link never came up, the faulted path is marked “Default”. Either case, it represents the path on which the link was attempted or established unsuccessfully.

Test command for the system links, **test sys-link PCSSpp** can be specified with current or faulted as an optional argument if the user wishes to test all the components in the specified path. The tests executed will be the same if the user were to test each component manually. In the event that the user does not specify any path, then only the tests specified for the system links are executed.

Order of Investigation	Short Test Sequence	Long Test Sequence	D/ND[1]
System Link Status (#985)	X	X	N

1 D = Destructive, ND = Non-destructive

System Link Status (#985)

This non-destructive test queries the switch for the status of the system link and verifies that all switch components have the same view of the link state.

Table 10-591. TEST #985 System Link Status

Error Code	Test Result	Description/Recommendation
1007	ABORT	Could not locate the system link associated with this location 1. Retry the command at 1-minute intervals for a maximum of 5 times.
2500	ABORT	Internal system error 1. Retry the command at 1-minute intervals for a maximum of 5 times.
6	FAIL	The system link is down. 1. Follow the procedure for error type 13.
	PASS	The system link is up.

SYS-PRNT (System Printer)

MO Name (in Alarm Log)	Alarm Level	Initial Command to Run	Full Name of MO
SYS-PRNT	MINOR	test sp-link l	System Printer
SYS-PRNT	WARNING	release sp-link	System Printer

The Report Scheduler feature provides the capability to schedule selected administration commands to be printed by an asynchronous System Printer (SYS-PRNT) or sent to a Personal Computer (PC). The System Printer Link to this external device can be administered either as a data extension or to the EIA port on the switch Processor (PROCR) circuit pack which provides a standard EIA 232C interface.

System Printer Link Maintenance provides a strategy for maintaining the link between the system and an external SYS-PRNT output device. The strategy includes a set of tests for detection of errors during normal operation, troubleshooting actions, and alarms for serious problems. System Printer Link Maintenance uses a try-and-wait mechanism for maintaining the SYS-PRNT link. If the link set-up fails, a minor alarm is raised for service attention. A warning alarm is raised when the SPE has been busied out. A maximum of two link retry attempts is made. After the second attempt, set-up attempts are only made by the application software (that is, the 15-minute timer fires and jobs are printed unless an immediate job was entered.) After two unsuccessful attempts to establish the link, a MINOR alarm is raised for service attention. If the System Printer Link is torn down due to an error, System Printer Link Maintenance raises a MINOR alarm but does not attempt to bring up the System Printer Link.

In DEFINITY Generic 1, the following physical configurations are supported for the System Printer Link:

a. from the EIA port on the Processor circuit pack to a SYS-PRNT output device via the standard EIA 232C interface

b. from a data channel (DATA-CHL) on the Network Control circuit pack (DATA-BD) to a data extension where the SYS-PRNT output device connects via the standard EIA 232C interface

The data extension can be a(n) PDM, MPDM, DTDM, or ADU. The PDM, MPDM, or DTDM connects to a Digital Line (DIG-LINE) on the TN754 or TN754B Digital Line circuit pack (DIG-BD); the ADU connects to a Data Line (DAT-LINE) of the TN726 Data Line circuit pack (DT-LN-BD).

System Printer Link Maintenance does not cover the elements comprising the SYS-PRNT physical link; that is, the external SYS-PRNT output device, the EIA port on the Processor circuit pack, the Data Module (PDM/MPDM/DTDM) and the Digital Line of TN754 or TN754B Digital Line circuit pack, the ADU and the Data Line of TN726 Data Line circuit pack, and the data channels on the TN777 Network Control circuit pack. If System Printer Link Maintenance cannot restore the System Printer Link, the maintenance tests of these individual components of the System Printer Link must be executed to diagnose faults.

Procedures for Restoring the System Printer Link

The following procedures should be followed to restore the System Printer Link:

1. Determine the status of the System Printer Link via the **status sp-link** command. Verify that the System Printer Link is not busied out for maintenance. On the System Printer Link Status Form, this is indicated by a “no” in the “Maintenance Busy?” field. If the System Printer Link has been busied out, issue the **release sp-link** command. If the link is “down,” proceed to Step 2.

2. Issue the **display system feature** command to determine the destination of the System Printer Link.

   If the destination is an *extension number*, enter the **status data-module <extension>** command and verify that the data extension is in-service/idle. If the data extension is NOT available, refer to the “Port/Channel Number” field on the “Data-Module Status” Form. Look for errors and/or alarms on the circuit pack with which this extension is associated. Refer to the appropriate MO documentation for recommended repair strategy. Continue with Step 3.

   If the destination is *eia*, look for PR-MAINT errors in the Hardware Error Log. If errors are present, refer to Maintenance/Tape Processor Maintenance documentation, and continue with Step 5.

3. Determine if a data channel on the Network Control circuit pack is in-service/idle as follows:

   a. Use the **list data-module** command to find out the extension numbers of the data channels on the Network Control circuit pack. (There is a maximum of 4. They are listed as “netcon” on the Active SPE. Ignore the Standby data channels.)

   b. Enter the **status data-module <extension>** command to verify that at least one Active data channel is in-service/idle.

4. If four data channels are administered and none are available, then look for DATA-CHL/DATA-CON/DATA-BD errors in the Hardware Error Log. If errors are present, refer to these MO sections for recommended maintenance strategy. When problems (if any) with DATA-CHL/DATA-CON/DATA-BD have been resolved, continue with Step 5.

   If fewer than four data channels are administered, then use the **add data-module** command to add a network control data module to the system.

5. Verify the availability of the external SYS-PRNT output device as follows:

   Make sure that the SYS-PRNT output device is *on-line* and ready-for-service. Check the physical connectivity between the Data Module and the SYS-PRNT output device or between the EIA port on the backplane of the switch and the SYS-PRNT output device.

6. Verify that there are less than three active logins to the system. If this condition exists, a login session must be terminated before the System Printer Link can be established.

   NOTE:
   It is recommended that the System Printer Link be busied out before executing maintenance tests over objects which compose the System Printer Link. If the System Printer Link is busied out, then all System Printer Link maintenance actions are deactivated.

Error Log Entries and Test to Clear Values

Table 10-592. SYS-PRNT Maintenance Error Log Entries

Error Type	Aux Data	Associated Test	Alarm Level	On/Off Board	Test to Clear Value
0[1]	0	Any	Any	Any	test sp-link
18 (a)	0	busyout sp-link	WARNING	OFF	release sp-link
257 (b)	1 to 6	Link Retry Test (#215)	MINOR/ WARNING[2]	OFF	test sp-link l
513 (c)	0	None	MINOR	OFF	test sp-link

1 Run the Short Test Sequence first. If all tests pass, run the Long Test Sequence. Refer to the appropriate test description and follow the recommended procedures.

2 Minor alarms on this MO may be downgraded to Warning alarms based on the value in **set options**.

Notes:

a. System Technician has busied out the System Printer Link.

b. A failure was encountered while attempting to set up the System Printer Link. This attempt could have been initiated by either the Report Scheduler software or link maintenance [automatic link retry or the as the result of a Link Retry Test (#215) request]. The Aux Data field contains the following diagnostic information to aid in the correction of the failure:

   1. unavailability of system resources (too many active logins to the system).
   2. no data channels (DATA-CHLs) available on the Network Control circuit pack (DATA-BD).
   3. 4- time-out during setup attempt. Most likely due to problem with physical link or printer status.
   4. internal system error. Most likely temporary/sporadic failure.
   5. the data module the printer is trying to use is busy with another call. Use the **Status data module** command to determine when the port is available for testing.

   Refer to the ''Procedures for Restoring the System Printer Link'' section for recommended maintenance strategy.

c. The SYS-PRNT was interrupted because of one of the following reasons:

   1. the cable to the SYS-PRNT output device is disconnected;
   2. the SYS-PRNT output device is powered off;
   3. the data extension to which the SYS-PRNT output device connects has been busied out;
   4. internal software error.

   Check the connectivity of the wires and cables among the wall jacket, data module, and SYS-PRNT output device. Follow the instructions provided in the ''Procedures for Restoring the System Printer Link'' section.

System Technician-Demanded Tests: Descriptions and Error Codes

When inspecting errors in the system and deciding which ones to address, always investigate errors in the order they are presented in the table below. By clearing error codes associated with the *Link Retry Test*, for example, you may also clear errors generated from other tests in the testing sequence.

Order of Investigation	Short Test Sequence	Long Test Sequence	D/ND[1]
Link Tear Down Test (#213)		X	D
Link Retry Test (#215)	X	X	ND
Link Tear Down Test (#213)	X	X	ND

1 D = Destructive; ND = Nondestructive

Link Tear Down Test (#213)

This test is destructive.

The Link Tear Down Test disconnects the existing link between DEFINITY Generic 1 and the external SYS-PRNT output device. If the link has been disconnected already, this test just returns PASS. All resources allocated for a System Printer Link are released after this test.

Table 10-593. TEST #213 Link Tear Down Test

Error Code	Test Result	Description/Recommendation
40, 50	ABORT	Internal system error 1. Retry the command at 1-minute intervals a maximum of 2 times.
1010	ABORT	The System Printer Link has been busied out. 1. Enter **release sp-link** to release the System Printer Link from the busyout state. 2. Reissue **test sp-link long** to execute the test.
	FAIL	Internal system error 1. Retry the command at 1-minute intervals a maximum of 2 times.
	PASS	The System Printer Link is torn down or a Short Test Sequence was executed and the link was not torn down.

Link Retry Test (#215)

The Link Retry Test sends a message to the SYS-PRNT software process either (1) to make a data call to the extension to which the SYS-PRNT output device connects OR (2) to open the EIA port to the SYS-PRNT output device. If the System Printer Link is already up, this test passes without making a data call or opening the EIA port.

Table 10-594. TEST #215 Link Retry Test

Error Code	Test Result	Description/Recommendation
10, 20	ABORT	Internal system error 1. Retry the command at 1-minute intervals a maximum of 2 times.
30	ABORT	Internal system error 1. Refer to the "Procedures for Restoring the System Printer Link" section for recommended maintenance strategy.
1010	ABORT	The System Printer Link has been busied out. 1. Enter **release sp-link** to release the System Printer Link from the busyout state. 2. Reissue the **test sp-link long** command to execute the test.
	FAIL	The System Printer Link CANNOT be established. 1. Refer to the "Procedures for Restoring the System Printer Link" section for recommended maintenance strategy.
	PASS	The System Printer Link is up.

SYSTEM (System)

MO Name (in Alarm Log)	Alarm Level	Initial Command to Run[1]	Full Name of MO
SYSTEM	None	None	SYSTEM

1 SYSTEM only has errors associated with it and thus only appears in the Error Log and not in the Alarm Log. There are no tests that can be run with SYSTEM.

SYSTEM is generally used when software encounters a problem with either hardware or itself and requests a restart to clear the problem. For example, if there is a loss of clock in a system with high or critical reliability, the system asks for a Reset 2 to switch to the other clock. SYSTEM also logs errors that cannot be associated with any single process. This is not a problem. The initcauses log should also confirm that a software-requested restart was performed.

Error Log Entries and Test to Clear Values

The Aux Data field may be 0 or the return code from a bad software call, and the following examples in no way exhaust the possibilities. Often, two errors are logged at the same time for each problem.

Table 10-595. System Error Log Entries

Error Type	Aux Data	Associated Test	Alarm Level	On/Off Board	Test to Clear Value
0[1]	0	Any	Any	Any	None
8 (a)	0	None			
9 (b)	Any	None			
10 (c)	Any	None			
21 (d)		None			
133 (e)	0	None			
355 (f)	Any	None			
356 (g)	Any	None			
601 (h)		None			
602 (i)		None			
603 (j)		None			
9012 (k)	Any	None			

1 Run the Short Test Sequence first. If all tests pass, run the Long Test Sequence. Refer to the appropriate test description and follow the recommended procedures.

Notes:

a. A System Restart Level 3 was requested.

b. A System Restart Level 2 was requested. This can happen due to a loss of tones (due to a faulty Tone-Clock circuit pack).

c. A System Restart Level 1 was requested.

d. A process trapped.

e. This error appears when patching, and subsequently applying the patch by a *craft*-requested **reset system 1**.

f. A Restart Level 2 occurred due to a power loss.

g. A Restart Level 2 occurred due to a tone clock loss.

h. An error occurred during initialization.

i. An error occurred while loading translations and the system requested a Restart Level 3.

j. A process was reset.

k. In a Generic 1 system configured with High or Critical Reliability, a scheduled SPE-interchange was blocked because a tape operation was in progress.

TAPE (Tape Unit) [G3iV1.1-286]

MO Name (in Alarm Log)	Alarm Level	Initial Command to Run	Full Name of MO
TAPE	MAJOR	test tape long[1]	Tape Unit
TAPE	MINOR	test tape long	Tape Unit
TAPE	WARNING	test tape long	Tape Unit

1 This alarm occurs only at power-up time or on a Reset System 3, 4, or 5 when the system cannot load **all** translations from tape. Refer to the footnote associated with Error Type 3329 in the “Hardware Error Log Entries and “Test to Clear Values” section.

NOTE:
Alarms on the TAPE, PROCR, and PR-MAINT MOs are indicated by the red LED on the Processor circuit pack.

The Tape Unit consists of a Wangtek FAD3500 series tape drive mounted on the TN774 Tape Drive circuit pack, which is controlled by the TN773 Processor circuit pack. For tape controller functions, the processor uses memory on the TN770 Memory circuit pack.

The Tape Unit is used to:

- Boot the system
- Save or load translations and announcements
- Save the Error Logs
- Save core dumps

There are two versions of the **test tape** system technician command that can be used to initiate maintenance tests on the Tape Unit: one for Standard systems and one for High and Critical Reliability systems. In a Standard system, the command line entry to test the TAPE (Tape) MO is **test tape [short/long] [repeat n/clear]**. In a High or Critical Reliability Option system, the command line entry to test the TAPE (Tape) MO is **test tape [short/long] [a/b] [repeat n/clear]**.

In a High or Critical Reliability system, if an alarm is raised against the Tape Unit, the alarm also indicates the carrier (either 1A or 1B), depending on which SPE has the problem.

NOTE:
CLEANING THE TAPE DRIVE HEAD IS VERY IMPORTANT because a tape drive head with abrasive particles can permanently damage a new tape. In addition, a worn tape may leave abrasive particles in the tape drive head. Before implementing any of the following repair procedures, the tape head of all the tape drive units in the system should be cleaned. Follow the directions given in the "Tape Drive Head Cleaning Procedure" section.

Hardware Error Log Entries and Test to Clear Values

Tape Unit Error Log Entries

Error Type	Aux Data	Associated Test	Alarm Level	On/Off Board	Test to Clear Value
0 (a)	0	Any	Any	Any	test tape
1 (b)	Any	Tape Status Test (#69)	MINOR	OFF	test tape r 2
257 (c)	Any	Tape Status Test (#69)	WARNING	OFF	test tape r 2
513	Any	Tape Reset Test (#67)	MINOR	OFF	test tape l r 2
1025	Any	Tape Diagnostic Test (#66)	MINOR	OFF	test tape r 2
1281	Any	Tape Diagnostic Test (#66)	MINOR	OFF	test tape r 3
1537	Any	Tape Diagnostic Test (#66)	MINOR	OFF	test tape r 3
1793 (d)	Any	None	MINOR	OFF	see (d)
1828 (e)	Any	None	MINOR	OFF	see (e)
2049 (f)	Any	None	WARNING	OFF	see (f)
2051 (o)	Any	Tape Read/Write Test (#65)	WARNING	OFF	see (o)
2084 (g)	Any	None	WARNING	OFF	see (g)
2561	Any	Tape DMA Latch Test (#230)	MINOR	ON	test tape r 3
2817 (h)	Any	Tape Read/Write Test (#65)	MINOR	OFF	test tape l r 2
3329 (i)	Any	Save the Translations	MINOR	OFF	see (i)
3841 (j)	Any	Save the Translations	MINOR	OFF	save translation
3842 (k)	Any	Save the Translations	MINOR	OFF	save translation

Continued on next page

Tape Unit Error Log Entries

Error Type	Aux Data	Associated Test	Alarm Level	On/Off Board	Test to Clear Value
3843 (l)	Any	Save the Translations	MINOR	OFF	save translation
3984(m)	Any	Save Translations	MINOR	OFF	save translation
10498 (n)	0	Save the Translations			
10508 (o)	0	Save the Translations			

Notes:

a. Run the Short Test Sequence first. If all tests pass, run the Long Test Sequence. Refer to the appropriate test description and follow the recommended procedures.

b. Error 1 indicates that the tape unit does not recognize that a cartridge is inserted into the tape drive. If, in fact, there is no cartridge in the drive, the problem can be corrected by simply inserting a cartridge. Follow the directions given in “Error Type #1 - Repair Procedure.”

   If there is a tape cartridge inserted into the tape drive, the problem is that certain tape or tape drive failures may cause the tape drive to erroneously report “missing tape” errors (tape Error Type #1 OR Aux Data value 9024). Since this error may be the result of a problem with either the tape or the tape drive unit, the tape cartridge should be replaced first. If the problem persists, the tape unit should be replaced. When this error is first detected, follow “Error Type #1 - Repair Procedure.”

   Error Type #1 - Repair Procedure:

   1. Replace the tape cartridge (if one exists) in the tape unit associated with this error with a new tape cartridge.
   2. Issue the **test tape [a/b] repeat 2** command for the tape drive unit that has the error.
   3. If all the tests pass, assume that the problem has been resolved.

      If some of the tests fail, resolve the corresponding errors, and repeat step #2.
   4. If translations have not already been saved onto the new tape, issue the **save translations** command.
   5. If the system contains recorded announcements, issue the **save announcements** command.

If Error Type #1 reappears and becomes a chronic problem, the fault may be with the tape drive unit, and it could be intermittent in nature. In this case, replace the tape drive unit with a new tape drive unit and repeat "Error 1 - Repair Procedure." Refer to Step 5 of the ''Tape Maintenance and Repair Procedures'' section for directions on how to replace the tape drive unit.

c. Error Type #257 indicates that the tape cartridge is write-protected. To disable the tape write-protect feature, move the sliding write-protect switch (which is labeled RECORD) on the tape cartridge away from the RECORD position. The RECORD position is indicated by an arrow pointing to the left. Error Type #257 can then be cleared by issuing the **test tape [a/b] repeat 2** command for the tape drive unit that has the error.

d. Error Type #1793 is reported whenever the system software detects an uncorrectable tape block error during a read or write operation on the tape.

An **uncorrectable tape error** is one in which a block error persists during a read or write operation to the tape. Errors of this type were unable to be corrected by several attempts at rereading or rewriting the block on the tape. This type of error is most likely the result of one or more hard errors on the tape (for example, a scratch or a hole in the tape that spans multiple sectors).

The auxiliary data field indicates the file on the tape in which the error was detected. Refer to Table C for a list of possible auxiliary data field values and the corresponding tape file.

Since this error may be the result of a problem with either the tape or the tape drive unit, the tape cartridge should be changed first. If the problem persists, the tape unit should be changed. When this error is first detected, follow "Error Type #1793 - Repair Procedure."

Error Type #1793 - Repair Procedure:

1. Replace the tape cartridge in the tape unit on which the error occurred with a new tape cartridge.
2. [G1.2, G3iV1.1-286] Issue the **test tape [a/b] long clear** command for the associated tape drive unit.

   [G1.1] Issue the **test tape [a/b] long repeat 3** command for the associated tape drive unit. If the system release is earlier than G1.1, refer to Note (o) also.
3. If all tests pass, assume that the problem has been resolved.

   If some tests fail, resolve those errors and repeat Step #2.
4. If translations have not already been saved onto the new tape, issue the **save translations** command.
5. If the system contains recorded announcements, issue the **save announcements** command.

If this error reappears and becomes a chronic problem, the fault may be with the tape drive unit, and it could be intermittent in nature. In this case, replace the tape drive unit with a new tape drive unit and repeat “Error Type #1793 - Repair Procedure.” Refer to Step 5 of the ‘‘Tape Maintenance and Repair Procedures’’ section for directions on how to replace the tape drive unit.

e. Error Type #1828 is reported under the following conditions;

- [G3iV1, EDI 7.0 and earlier] This error is never reported.
- [G3iV1, EDI 6.0 and earlier] Whenever Test #692 (Tape Block Error Test) fails due to an uncorrectable tape block error.
- [G1.1] Whenever any maintenance test fails due to an uncorrectable tape block error.

To clear Error Type #1828, follow the procedures given in the footnotes for Error Type #1793.

f. Error Type #2049 is reported under the following conditions;

- [G3iV1 EDI 7.0 and later] This error is never reported.
- [G1.1, G3iV1 EDI 6.0 and earlier] Error Type #2049 is reported whenever the software detects a correctable tape block error during a read or write operation on the tape.

  A **correctable tape error** is one in which a block error is detected but corrected during a read or write to the tape. This type of error may be caused by either a soft tape error (for example, the tape head is jiggled while reading or writing data), or by a hard tape error (for example, a scratch or a hole in the tape that affects only a single sector of the tape).

  The auxiliary data field indicates the file on the tape in which the error was detected. Refer to Table C for a list of possible auxiliary data field values and the corresponding tape file.

  With this error, the tape is fully functional but is in danger of developing an uncorrectable tape error. The tape cartridge should be changed when it is convenient to do so.

  To clear Error Type #2049, follow the procedures given in the footnotes for Error Type #1793.

g. Error Type #2084 is reported under the following conditions;

- [G3iV1 EDI 7.0 and later] This error is never reported.
- [G3iV1 EDI 6.0 and earlier] Whenever Test #692 (Tape Block Error Test) fails due to a correctable tape block error.
- [G1.1] Whenever any maintenance test fails due to an correctable tape block error.

To clear Error Type #2084, follow the procedures given in the footnotes for Error Type #1793.

h. [G1.1, G3iV1 EDI 6.0 and earlier] Error Type #2817 is reported whenever the tape read/write test fails. The auxiliary data field indicates the cause of the test failure as follows:

9032 –	Significant portion of the scratch area on the tape cannot be read.
9033 –	Significant portion of the scratch area on tape cannot be written.
9034 –	Significant portion of the scratch area on the tape cannot be read or written.

i. Error Type #3329 indicates that an error occurred while loading translations. This error and the corresponding alarm occurs at power-up or on a Reset System 3, 4, or 5 if the system cannot load translations. This error results in a MAJOR alarm if translations are not already loaded and in a MINOR alarm otherwise. If the system does not contain valid translations, this alarm will invoke Emergency Transfer.

Standard System

NOTE:
The following repair procedure assumes that no major alarms exist on the PROCR (Processor) or MEM-BD (Memory) circuit packs. If any of these alarms exists, resolve them before trying to resolve this alarm.

Error Type #3329—Repair Procedure (Standard System):

1. Look in the Hardware Error Log for Error Type #1793. If this error exists, replace the tape cartridge with a backup cartridge that has valid system translations.
2. [G1.2, G3iV1.1-286] Issue the **test tape long clear** command.
3. [G1.1] Issue the **test tape long repeat 3** command.
4. If all tests except for Test #505 pass, assume that the problem has been resolved. Test #505 will fail if a successful load translations has not occurred.

   If some other tests besides Test #505 fail, resolve those errors, and repeat Step #2.
5. Issue the **reset system 3** command.
6. Issue the **list configuration software** command.
7. If the tape resident translations date is “none,” insert a backup tape cartridge and go back to Step #2 (try up to 2 backup tapes).
8. If the problem is *not* resolved, follow normal escalation procedures.

High and Critical Reliability Systems

NOTE:
In a High or Critical Reliability system, the following repair procedure assumes that no major alarms exist on the PROCR (Processor), MEM-BD (Memory), or DUPINT (Duplication Interface) circuit packs or on the STBY-SPE (Standby SPE) MO. If any of these alarms exists, resolve them before trying to resolve this alarm.

Both Active and Standby SPE Tapes alarmed

This situation arises whenever translations cannot be loaded on either SPE. If the system was powered up, both tapes were alarmed at almost the same time as a result of this error. It is very possible that no SPE-Interchange occurred. However, if the system was restarted as a result of a **reset system [3 | 4 | 5]** command, and when an alarm was raised against the Active SPE as a result of Error Type #3329, a Level 3 SPE-Interchange automatically occurred, and the “new” Active SPE attempted to load translations. When this SPE failed to load translations, its tape was alarmed as well.

Error Type #3329 - Repair Procedure #1 (High or Critical Reliability System):

1. Issue the **status system** command to determine which SPE

   (A or B), is the Active SPE. It is labeled as “active.”

2. Use “Error Type #3329—Repair Procedure (Standard System)” to ensure that the tape and tape unit in the Active SPE are functioning properly and to read in translations.

3. Log into the Manager I terminal again and issue the **display alarms** command to see if any alarms were raised against the Active SPE tape.

   a. If a major alarm against the Active SPE tape now exists, escalate the problem.

   b. If minor alarms against the Active SPE tape now exist, resolve those alarms before continuing with Step #5.

   c. If no alarm exists against the Active SPE tape, continue with Step #4.

4. Replace the tape in the Standby SPE. If a new tape is used, translations must have been successfully saved in order to clear Error Type #3329.

5. Issue the **refresh spe-standby** command. It may be necessary to issue this command multiple times. However, if you have issued the **refresh spe-standby** command 5 times, and if the Standby SPE is still not labeled “Standby” on the Status System Form, escalate the problem.

6. The Standby SPE must be in Standby Mode before issuing the **test tape [a|b] long** command. If the Standby SPE is not in Standby Mode, the additional tests needed to clear Error Type #3329 are not run. These additional tests also cause the **test tape [a|b] long** command to take longer to execute.
7. Test the Standby tape by issuing the **test tape [a|b] long** command. Issuing this command whenever the SPE contains an active Error Type #3329 causes the SPE to undergo a COLD 1 restart. This restart attempts to load translations and, if successful, it clears the error.
8. If the problem is not resolved, follow normal escalation procedures.

Only one SPE Tape alarmed

A typical scenario that results in a single minor TAPE alarm follows: The system boots up on an SPE and cannot read in translations. As a result, a major alarm against TAPE is raised. The system performs a Level 3 SPE-interchange and then reads in translations from the tape on the “new” Active SPE. At this point, the major TAPE alarm is downgraded to a minor TAPE alarm.

Error Type #3329 - Repair Procedure #2 (High or Critical Reliability System):

1. The tape against which Error Type #3329 has been logged should reside in the Standby SPE. Issue the **status system** command to determine which SPE is active.

   If Error Type #3329 is logged against the Active SPE, follow Steps 1 through 3 of “Error Type #3329—Repair Procedure #1 (High and Critical Reliability Systems).”

   If Error Type #3329 is logged against the Standby SPE, follow Steps 4 through 7 of “Error Type 3329 - Repair Procedure #1 (High and Critical Reliability Systems).”
2. Error while saving translations. Resolve other tape errors, and reissue the **save translations** command.

j. Error Type #3841 indicates that a save translations operation failed because the tape was in use. Wait two minutes, then issue the **save translations** command. Try this a maximum of 5 times.

k. Error Type #3842 indicates a save translation failure due to a tape-related problem. The following procedure is recommended to clear this error.

   Error Type 3842 - Repair Procedure:

   1. Look in the Hardware Error Log for Error Type #1793. If this error exists, replace the tape cartridge in the tape unit on which the error occurred with a new cartridge.

2. [G1.2 and later] Issue the **test tape [a/b] long clear** command for the associated tape drive unit.

   [G1.1 and earlier] Issue the **test tape [a/b] long repeat 3** command for the associated tape drive unit.

3. If all tests up to Test #505 pass, assume that the problem has been resolved. Test #505 will fail if a successful save translations has not occurred since the original failure.

   If any tests other than Test #505 fail, resolve those errors and repeat Step #3.

4. Issue the **save translations** command.

5. If the system contains recorded announcements, issue the **save announcements** command.

l. Error Type #3843 indicates that during daily scheduled maintenance, the automatic save translation failed. The failure occurred most likely as a result of a hardware problem rather than a tape problem.

   To clear Error Type #3843, follow the procedures given in the footnotes for Error Type #3842.

m. [G1.1 and earlier] Translations were not saved on the tape(s) corresponding to the port field(s) indicated. In this case, the port field points to the Standby SPE at the time the error occurred. Resolve other tape errors, and then issue the **test tape long** and **save translations** commands, respectively.

n. [G1.1 and earlier] If these errors occur in conjunction with Error Type #3329, a major alarm is logged against the error type. To resolve this alarm, follow the instructions for Error Type #3329.

o. [G1.1 and earlier] “Leaky Bucket” strategy for Error Types #1793, #1828, #2049, #2051, and #2084 on the Active SPE. Whenever any of these errors appear in the Error Log, they will be automatically resolved within 48 hours if the errors do not recur within that period. In G1.0, this is the only way these errors can be cleared (without resetting the system).

System Technician Demanded Tests: Descriptions and Error Codes

Always investigate tests in the order they are presented in the table below when inspecting errors in the system. By clearing error codes associated with the *Tape DMA Latch Test* for example, you may also clear errors generated from other tests in the testing sequence.

Order of Investigation	Short Test Sequence	Long Test Sequence	D/ ND[1]
Tape Reset Test (#67)		X	ND
Tape DMA Latch Test (#230)	X	X	ND
Tape Diagnostic Test (#66)	X	X	ND
Tape Read/Write Test (#65) (a)		X	ND
Tape Block Error Test (#692) (b)		X	ND
Tape Status Test (#69)	X	X	ND
Tape Translation Status Test (#505)		X	ND
TAPE-DAT Tape Consistency Test (#421) (c)		X	ND

1 D = Destructive; ND = Nondestructive

Notes:

a. The Tape Read/Write Test only runs in the following software releases;
   - G1
   - G3iV1, EDI 6.0 and earlier.

b. The Tape Block Error Test runs only in software release G3iV1, EDI 15.0 and earlier.

c. Refer to TAPE-DAT (Tape Consistency) Maintenance documentation for the description of this test.

Tape Read/Write Test (#65)

The purpose of this test is to exercise the hardware read/write circuitry and the basic functionality of the tape cartridge. This test is done by reading 22 blocks of data and by then writing 22 blocks of data into reserved space on the tape cartridge.

NOTE:
This test does not check for tape cartridge data consistency, nor does it check the integrity of every block on tape.

Table 10-596. TEST #65 Tape Read/Write Test

Error Code	Test Result	Description/Recommendation
1029 to 1030 and 2011 to 2051	ABORT	Refer to the STBY-SPE (Standby SPE) Maintenance documentation for a description of these error codes.
9000's	ABORT or FAIL	Refer to Table A in "Tape Unit Aux Data/Error Codes Tables" and follow the recommended repair strategy for specific Aux Data.
Any Others	ABORT or FAIL	Refer to Table B in "Tape Unit Aux Data/Error Codes Tables" and follow the recommended repair strategy for specific Aux Data.
	PASS	All tape hardware is in good working order. Passing this test does not guarantee that every single data block on the tape cartridge can be read or written to.

Tape Diagnostic Test (#66)

This test activates the diagnostic tests built into the Maintenance/Tape Processor (MTP) firmware on the TN773 Processor circuit pack. The test verifies the basic read/write capability of the tape drive and tape cartridge. Also, the test performs controller/MTP hardware diagnostics.

The test reads from the tape and performs write verification testing by writing data into a maintenance block and reading it back. It also performs a tape drive head step check by advancing the tape drive head through all even streams on the tape (streams 0 through 18) to make sure the head is operational.

The test does not test every data block on the tape.

Table 10-597. TEST #66 Tape Diagnostic Test

Error Code	Test Result	Description/Recommendation
1029 to 2051	ABORT	Refer to the STBY-SPE (Standby SPE) Maintenance documentation for a description of these error codes.
9000's	ABORT or FAIL	Refer to Table A in "Tape Unit Aux Data/Error Codes Tables" and follow the recommended repair strategy for specific Aux Data.

Continued on next page

Table 10-597. TEST #66 Tape Diagnostic Test — *Continued*

Error Code	Test Result	Description/Recommendation
Any Others	ABORT or FAIL	Refer to Table B in "Tape Unit Aux Data/Error Codes Tables" and follow the recommended repair strategy for specific Aux Data.
	PASS	This is a comprehensive test of the Tape Unit. The test verifies that the tape drive is in good working order.

Tape Reset Test (#67)

This test resets the tape portion of the Processor on the Maintenance/Tape Processor (PR-MAINT), and it resets the shared RAM on the Processor circuit pack (TN770). The test can pass when no drive is present because it never accesses the tape drive.

Table 10-598. TEST #67 Tape Reset Test

Error Code	Test Result	Description/Recommendation
1029 to 2051	ABORT	Refer to the STBY-SPE (Standby SPE) Maintenance documentation for a description of these error codes.
9000's	FAIL	Refer to Table A in "Tape Unit Aux Data/Error Codes Tables" and follow the recommended repair strategy for specific Aux Data.
Any Others	FAIL	Refer to Table B in "Tape Unit Aux Data/Error Codes Tables" and follow the recommended repair strategy for specific Aux Data.
	PASS	Communication with the tape processor is possible at a very basic level.

Status Request Test (#69)

This test requests the Maintenance/Tape Processor (MTP) firmware on the TN773 Processor circuit pack for the current Tape Unit status and displays the results.

Table 10-599. TEST #69 Status Request Test

Error Code	Test Result	Description/Recommendation
1029 to 2051	ABORT	Refer to the STBY-SPE (Standby SPE) Maintenance documentation for a description of these error codes.
9000's	ABORT	Refer to Table A in "Tape Unit Aux Data/Error Codes Tables" and follow the recommended repair strategy for specific Aux Data.
Any Others	FAIL	Refer to Table B in "Tape Unit Aux Data/Error Codes Tables" and follow the recommended repair strategy for specific Aux Data.
	PASS	This test verifies the basic communication between the Processor and the Tape Drive circuit pack.

Tape DMA Latch Test (#230)

Also known as the *Tape Interface Test*, this test checks the shared RAM on the TN770 Memory circuit pack. The test also checks the communication paths on the TN773 Processor circuit pack.

Table 10-600. TEST #230 DMA Latch Test

Error Code	Test Result	Description/Recommendation
1029 to 2051	ABORT	Refer to the STBY-SPE (Standby SPE) Maintenance documentation for a description of these error codes.
23001	ABORT	Could not allocate the necessary system resources to run this test. 1. Retry the command at 1-minute intervals a maximum of 5 times.
23002 to 23005	FAIL	Hardware not responding. 1. Follow the instructions provided in the "Tape Maintenance and Repair Procedures" section.

Continued on next page

Table 10-600. TEST #230 DMA Latch Test — *Continued*

Error Code	Test Result	Description/Recommendation
23006	FAIL	Could not send a test message to MTP. 1. Repeat the same test again. 2. Look for PROCR and MEM-BD errors in the Error Log. If such errors are present, refer to PROCR (80286 Processor circuit pack) and MEM-BD (Memory) Maintenance documentation. 3. If no tests on the Memory circuit pack or Processor circuit pack fail, escalate the problem.
23007	FAIL	Operation timed out. 1. Do the steps below following the directions in the "Tape Maintenance and Repair Procedures" section. 2. Issue the **test tape long** command. 3. If the test fails, make sure tape is fully inserted. 4. If the test continues to fail, clean the tape head and retest. 5. If fail, swap tape and retest. 6. If the test still fails, swap tape unit, *use original tape* and retest.
23008	FAIL	MTP indicates a test failure. 1. Follow the instructions provided in the "Tape Maintenance and Repair Procedures" section.
23009 to 23017	FAIL	Hardware problem. Problem accessing test Memory locations #1, #2, and #3. 1. Follow the procedures provided in the "Tape Maintenance and Repair Procedures" section.
9000's	ABORT	Refer to Table A, "Tape Unit Aux Data/Error Codes Tables" and follow the recommended repair strategy for the specific error code.
Any Others	ABORT	Refer to Table B, "Tape Unit Aux Data/Error Codes Tables" and follow the recommended repair strategy for the specific error code.
	PASS	If this test passes, the TN770 Memory and the TN773 Processor circuit packs are in good working order. This is not a test of the tape cartridge or of the TN774 Tape Drive circuit pack.

Tape Translation Status Test (#505)

This test checks whether the TAPE is currently alarmed due to the failure of a load translation or save translation attempt on the TAPE.

Table 10-601. TEST #505 Tape Save Translation Status Test

Error Code	Test Result	Description/Recommendation
1029 to 1030 and 2011, 2013 to 2051	ABORT	Refer to the STBY-SPE (Standby SPE) Maintenance documentation for a description of these error codes.
2012	ABORT	1. Do the steps below following the directions in the ''Tape Maintenance and Repair Procedures'' section. 2. Issue the **test tape long** command. If the test passes, issue the **save translations** command to verify condition is clear. 3. If the test fails, make sure tape is fully inserted. 4. If the test continues to fail, clean the tape head and retest. 5. If fail, swap tape and retest. 6. If the test still fails, swap tape unit, *use original tape* and retest.
	FAIL	The tape is currently alarmed because a save translation or a load translation attempt failed on this tape. Look for Errors Types #3329, #3841, #3842, and #3843 in the Hardware Error Log and resolve these errors by following the procedures provided in the “Hardware Error Log Entries and Test to Clear Values” section.
	PASS	The last load translation and (if any) save translation attempts were successful on this tape.

Tape Block Error Test (#692)

This test is performed by rereading the list of tape blocks that have been reported by the software to contain correctable (Error Type #2049) or uncorrectable (Error Type #1793) block errors.

A **correctable tape error** is one in which a block error is detected but corrected during a read or write to the tape. This type of error may be caused by either a soft tape error (for example, the tape head is jiggled while reading or writing data) or by a hard tape error (for example, a scratch or a hole in the tape that affects only a single sector of the tape).

An **uncorrectable tape error** is one in which a block error persists during a read or write operation to the tape. Errors of this type are unable to be corrected by several attempts at rereading or rewriting the block on the tape. This type of error is most likely the result of one or more hard errors on the tape (for example, a scratch or a hole in the tape that spans multiple sectors).

This test passes only if no block errors of any type are detected after the test completes. Otherwise, the test fails and returns an error code of the form “x0y,” where:

x indicates the number of uncorrectable block errors detected by the test [0-5]
y indicates the number of correctable block errors detected by the test [0-5]

The software stores the block location for at most five errors of each type.

Table 10-602. TEST #692 Tape Block Error Test

Error Code	Test Result	Description/Recommendation
1029 to 2051	ABORT	Refer to the STBY-SPE (Standby SPE) Maintenance documentation for a description of these error codes.
9000's	ABORT	Refer to Table A in ''Tape Unit Aux Data/Error Codes Tables'' and follow the recommended repair strategy for specific Aux Data.
x0y	FAIL	"x" indicates the number of uncorrectable block errors detected by the test [0-5]. "y" indicates the number of correctable block errors detected by the test [0-5]. Look for Error Types #1793, #1828, #2049, and #2084 in the Hardware Error Log and resolve these errors by following the procedures provided in the "Hardware Error Log Entries and Test to Clear Values" section. **NOTE:** If the value of "x" is "0," only the value of "y" is displayed.
100	FAIL	1. Do the steps below following the directions in the ''Tape Maintenance and Repair Procedures'' section. 2. Issue the **test tape long** command. 3. If the test fails, make sure tape is fully inserted. 4. If the test continues to fail, clean the tape head and retest. 5. If fail, swap tape and retest. 6. If the test still fails, swap tape unit, *use original tape* and retest.
	PASS	No block errors are detected.

Tape Unit Aux Data/Error Codes Tables

Table 10-603. Table A: Tape Unit Aux Data Table

Aux Data/ Error Codes	Explanation	Strategy
9002	Internal system error.	Escalate the problem.
9003	Hardware not responding.	1. Follow the instructions provided in the "Tape Maintenance and Repair Procedures" section.
9004 9005	Internal system error.	Escalate the problem.
9009 9010	Operation timed out. Hardware not responding.	1. Follow the instructions provided in the "Tape Maintenance and Repair Procedures" section.
9011	Internal system error.	Escalate the problem.
9012	Tape already in use.	1. If the Tape Unit is in use (that is, the yellow LED on the tape drive is on and there is tape cartridge motion), wait until the first request is complete. **If there does not appear to be tape motion and/or the yellow LED on the tape drive is not on, go to next step**. 2. Retry the **test tape** command at 1-minute intervals a maximum of 5 times.
9013	Tape drive self-test failed.	1. Follow the instructions provided in the "Tape Maintenance and Repair Procedures" section.
9015	Test detected hardware failure.	
9017	Could **NOT** reset the tape drive.	
9020	⚠ **WARNING:** *The tape cartridge is starting to wear, but it is still functional.*	
9023	Write-protected tape.	1. Disable the write-protect switch on the tape cartridge. 2. Check the power by performing Step 1 of the "Tape Maintenance and Repair Procedures" section.

Continued on next page

Table 10-603. Table A: Tape Unit Aux Data Table — *Continued*

Aux Data/ Error Codes	Explanation	Strategy
9024	No tape cartridge in tape drive.	1. Do the steps below following the directions in the "Tape Maintenance and Repair Procedures" section. 2. Issue the **test tape long** command. 3. If the test fails, make sure tape is fully inserted. 4. If the test continues to fail, clean the tape head and retest. 5. If fail, swap tape and retest. 6. If the test still fails, swap tape unit, *use original tape* and retest.
9025	Tape cartridge is worn, and it is **NOT** functional.	1. Do the steps below following the directions in the "Tape Maintenance and Repair Procedures" section. 2. Clean the tape head. 3. If still fail, check tape insertion, swap tape if necessary, and retest. 4. Replace tape unit as a last resort.
9026	Hardware error detected.	1. Do the steps below following the directions in the "Tape Maintenance and Repair Procedures" section. 2. Issue **test tape long** dispatch with tape unit. 3. If the test fails, make sure tape is fully inserted. 4. If the test continues to fail, clean the tape head. *Use original tape* and retest. 5. If the test still fails, swap tape unit, *use original tape* and retest. **NOTE:** It is very important that hardware problems are resolved *before* using backup tape. 6. If fails again, swap tape and retest.
9027	The test failed because the software could not access the tape hardware.	

Continued on next page

Table 10-603. Table A: Tape Unit Aux Data Table — *Continued*

Aux Data/ Error Codes	Explanation	Strategy
9030	Internal system error.	1. Follow the steps provided in the "Tape Maintenance and Repair Procedures" section.
9032	Inability to read a significant portion of the scratch area on the tape.	1. Follow the steps provided in the "Tape Maintenance and Repair Procedures" section.
9033	Inability to write a significant portion of the scratch area on the tape.	1. Follow the steps provided in the "Tape Maintenance and Repair Procedures" section.
9034	Inability to both read and write a significant portion of the scratch area on the tape.	1. Follow the steps provided in the "Tape Maintenance and Repair Procedures" section. 2. If problem still exists then escalate.

How to Use Table B to Determine Aux Data Values

In this table, the numbers can have one to five digits. If the first or leftmost digit is "1," the number has five digits. If the first digit or leftmost digit is "2," the number has four digits. If the first or leftmost digit is "3," the number has three digits. If the first or leftmost digit is "4," the number has two digits. If the first or leftmost digit is "5," the number has one digit. For example, if the number is "2300," "2" indicates that the tape cartridge should be replaced soon. "3" indicates that the Tape Drive could not read or write at least one block of data from the tape.

Table 10-604. Table B. Tape Unit Aux Data Table

Digit	Aux Data/ Error Code (a)	Explanation	Strategy
0	0	Exact cause of error is not determined.	1. Follow the instructions provided in the ''Tape Maintenance and Repair Procedures'' section. 2. If this is the only error and there is no alarm, ignore this error.
1	1xxxx	If the aux data is "10000," the error is non-fatal.	Ignore the "10000" case.
		Each of the last four digits of the Aux Data "1xxxx" is a non-zero value.	Follow the steps in the appropriate aux data section.
2	2xxx	The tape cartridge should be replaced soon.	1. Follow the instructions provided in the ''Tape Maintenance and Repair Procedures'' section.
3	3xx	Cannot read or write at least one block of data from the tape.	
4	4x	A problem was found reading the Shared Memory.	
5	5	Tape drive self-test failed.	

Aux Data Values Indicating the Tape File Type

This table translates Aux Data values to the corresponding tape file type.

Table 10-605. Table C. Tape File Types

Aux Data Value	File Type
0	Primary Translation File
1	Backup Translation File
2	Core Dump File
3	Program Update File
4	Boot Image File
6	Error Log File (not including scratch area)
12	Stored Announcement File
16	Processor Interface Firmware File
17	Header Block
19	Packet Control Firmware File
20	NIPM File
21	X25 File
22	Primary Directory File
23	Backup Directory File

Tape Drive Head Cleaning Procedure

The tape drive head (also called the tape head) should be cleaned at least once a year. **However, as part of the preventive maintenance strategy, it is recommended that you inspect the tape head during each maintenance visit and that you clean the tape head several times a year**. In addition, a dated label should be placed on the tape drive unit after the tape head is cleaned. You should also complete the “AT&T Preventive Maintenance Log” sheet. (Refer to Chapter 5, ‘‘Routine Maintenance Procedures’’.)

New tapes leave more abrasive particles on the tape head. Therefore, if a new tape is used, issue the **test tape long repeat 3** command, and then clean the tape head.

The tape head can be accessed for cleaning from the front of the drive by opening the tape access door with your finger. See Figure 10-94 on page 10-1633.

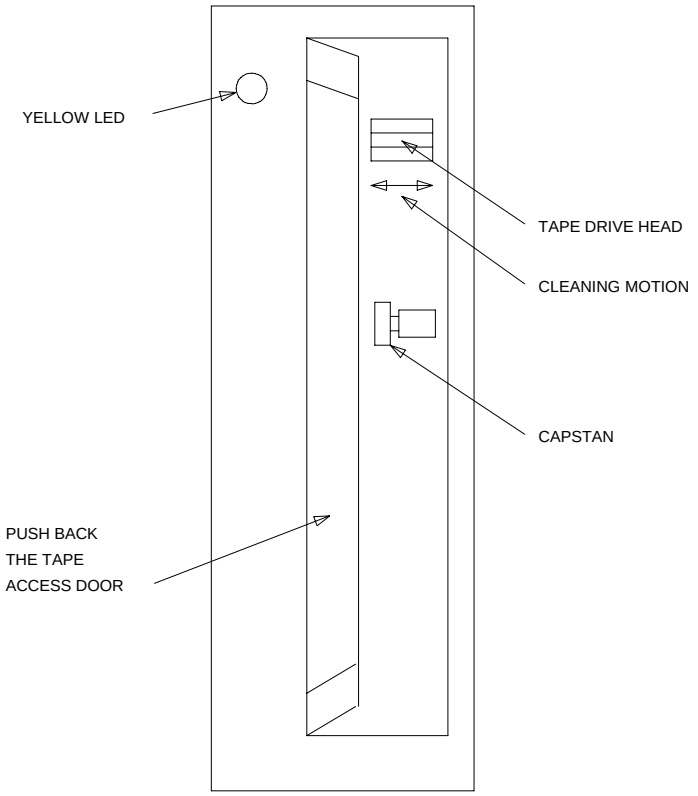

Figure 10-94. Front View of the Tape Drive

To position the tape drive head properly for cleaning, do the following:

1. Install a tape cartridge into the drive with the power on.
2. Wait 10 seconds or until the spinning of the tape stops.
3. Remove the tape cartridge.

CAUTION:
The tape drive head should be cleaned by using only Freon TF and polyurethane swabs. These products are usually available in VCR head cleaning kits sold in video stores.

4. Wet the swab with the Freon TF solution.
5. Using a “side-to-side” motion, wipe the tape drive head.

WARNING:
DO NOT GET TAPE HEAD CLEANING SOLUTION ON THE CAPSTAN.

6. With a dry swab, wipe away any remaining residue from the tape head.

Tape Maintenance and Repair Procedures

This section contains commonly used procedures to resolve tape alarms. The following equipment may be needed to complete these procedures:

- Tape Cartridges (3)
- TN774 Tape Drive Circuit Pack (1)
- TN773 Processor Circuit Pack (1)
- TN770 Memory Circuit Pack (1)

NOTE:
In the following repair procedures, the term “main tape(s)” is used to refer to the tape(s) that were physically present in the tape drive(s) at the time the problem occurred. The “main tape(s)” should not be confused with the term “backup tape(s)” Backup tapes are physically stored outside of the tape drive(s). The term “new tape(s)” refers to the three new tapes that you should bring with you to the customer’s site; these tapes may be needed to complete the tape maintenance procedures. The new tapes should not have been used previously in the customer’s system. **It is very important to keep track of these tapes.**

1. Check the Error Log for power-related problems and refer to the POWER, DC-POWER, and CARR-POW Maintenance documentation sections. If no power errors exist, check the tape drive for power as follows:
   - If there is a problem with the 12V supplied to the tape drive, its yellow LED will be in a blinking mode. The 12V is supplied by the 631DB or 676B power unit in a multicarrier cabinet system and by a WP91153 in the single-carrier cabinet system. This problem can also be caused by a failure in the 984D DC power converter on TN774 Tape Drive circuit pack.
   - If there is a problem with the five volts supplied to the tape drive, there is no visible way to determine this except by using the TN2036 Voltage Range circuit pack (see the “Troubleshooting Backplane Voltage Problems” section in Chapter 5, ‘‘Routine Maintenance Procedures’’ or by using the following procedure:

     Insert a tape cartridge into the tape drive. There should be a spinning noise indicating that the tape drive is doing a short retension pass. If there is no noise, the power may be disconnected.
2. Check for a dirty tape drive head.
   - Clean the tape drive head (refer to the ‘‘Tape Drive Head Cleaning Procedure’’ section, which immediately precedes this section).
   - Reinsert the main tape cartridge (for example, the tape that was in the tape drive). Make sure the tape is not write-protected.

- Issue the **test tape long repeat 3** or, for a High or Critical Reliability system, the **test tape [a|b] long repeat 3** command.

If all tests pass:

The alarm should be cleared ([G1 Only] unless Error Type #1793, #1828, #2049, or #2084 is present, in which case 48 hours must elapse). The problem was a dirty tape drive head.

If any of the tests failed, proceed to Step 3.

3. Check the health of the main tape cartridge.

   - Clean the tape drive head again since the main tape may have left abrasive particles on the tape drive head during the execution of the **test tape** commands.
   - Insert the backup tape cartridge. **Make sure it is not write-protected.**
   - Issue the **test tape long repeat 3** command or, for a High or Critical Reliability system, the **test tape [a|b] long repeat 3** command.

   If all tests pass:

   The alarm should be cleared ([G1 Only] unless Error Type #1793, #1828, #2049, or #2084 is present, in which case 48 hours must elapse). The problem was a defective main tape. Mark the defective tape and follow the standard disposal procedures.

   If any of the tests failed, proceed to Step 4.

4. Check for the health of the backup tape.

   - Clean the tape drive head again since the backup tape may have left abrasive particles on the tape drive head during the execution of the **test tape** commands.
   - Insert a new tape cartridge.

     CAUTION:
     Make sure that the tape is not write-protected and that the new tape contains the same or newer vintage of software compared to the vintage currently in the system.

   - Issue the **test tape long repeat 3** command or, for a High or Critical Reliability system, the **test tape [a|b] long repeat 3** command.

   If all tests pass:

   The alarm should be cleared ([G1 Only] unless Error Type #1793, #1828, #2049, or #2084 is present, in which case 48 hours must elapse). The problem was that both the main tape and backup tape became defective. Mark the defective tape and follow the standard disposal procedures.

   Use the following procedure to save translations and announcements on the new tape:

- On a High or Critical Reliability system, issue the **refresh spe-standby** command. It may be necessary to issue this command multiple times. However, if you have issued the **refresh spe-standby** command 5 times and the Standby SPE is still not labeled “Standby” on the Status System Form, escalate the problem.
- Issue the **save translations** command. If there is a TN750 Announcement circuit pack in the system, issue the **save announcements** command. Saving announcements may take longer than 30 minutes to complete.
- If this is a High or Critical Reliability system, run the Tape Consistency Test (#421) by issuing the **test tape [a|b] long** command. Refer to the TAPE-DAT Maintenance documentation to resolve any errors.
- Clean the tape head since new tapes leave more abrasive particles on the tape head (refer to the ‘‘Tape Drive Head Cleaning Procedure’’ section).

  If any of the tests fail, proceed to Step 5.

5. Check the health of the tape drive.

WARNING:
Vintage 6 and Vintage 8 of the TN773 Processor circuit pack in a Medium Cabinet use 12V DC power supplied from the Tape Drive circuit pack and thus may cause severe service disruption when the Tape Drive circuit pack is unseated from its slot. Therefore, when repairing a High or Critical Reliability system with this configuration, make the carrier with tape errors/alarms the Standby carrier before proceeding. For a Standard system with this configuration, arrange to do the work in off-hours before proceeding.

- Replace the tape drive. **DO NOT TURN OFF THE POWER**.
- Clean the tape drive head of the new tape drive.
- Insert the main tape cartridge.
- Issue the **test tape long repeat 3** command, or, for a High or Critical Reliability system, the **test tape [a|b] long repeat 3** command.

  If all tests pass:

  The alarm should be cleared ([G1 Only] unless Error Type #1793, #1828, #2049, or #2084 is present, in which case 48 hours must elapse). The problem was that the original tape drive was defective. (To see the hardware errors against the TAPE MO, issue the **display errors** command. Enter “a” in the Interval field and “tape” in the Category field.)

  If any of the tests fail, proceed to Step 6.

6. Determine if the defective tape drive has damaged the tapes.
   - Clean the tape drive head again since the main tape may have left abrasive particles on the tape drive head during the execution of the **test tape** commands.
   - Insert a new tape (not the one used in Step 4).

     CAUTION:
     Make sure that the tape is not write-protected and that the new tape contains the same or newer vintage of software compared to the vintage currently in the system.

   - Issue the **test tape long repeat 3** command, or for a High or Critical Reliability system, the **test tape [a|b] long repeat 3** command.

If all tests pass:

The alarm should be cleared ([G1 Only] unless Error Type #1793, #1828, #2049, or #2084 is present, in which case 48 hours must elapse). The problem was that the original drive is defective and that it damages any tape you put in it. (To see the hardware errors against the TAPE MO, issue the **display errors** command. Enter “a” in the Interval field and “tape” in the Category field.)

If the alarm persists, the cause of the problem is either the Maintenance/Tape Processor (MTP) residing on the TN773 Processor circuit pack or the Shared Memory (SRAM) on the TN770 Memory circuit pack. **Replacement of either of these two circuit packs in a Standard system requires powering down of the control carrier.** Therefore, use the following procedures to determine that there is a good (bootable) tape with the customer’s translations (since the main and backup tapes may have been corrupted and, as a result, would then prevent the successful reading in of translations during power-up).

NOTE:
Follow Steps 7 through 10 for Standard systems and Steps 11 through 13 for High or Critical Reliability systems.

For Standard Systems

NOTE:
Before performing the following repair procedures, refer to the “Handling Control Circuit Packs” section in Chapter 5, ‘‘Routine Maintenance Procedures’’ for instructions on how to replace a circuit pack in a Standard system.

7. **Make sure that there is a good tape drive and a good tape with the customer's translations before powering down the system.**
   - Insert a new tape cartridge. **Recall that a "new tape" is a tape that has not been used previously in the customer's system**.

     CAUTION:
     Make sure that the tape is not write-protected and that the new tape contains the same or newer vintage of software compared to the vintage currently in the system.

   - Try to make a tape with the customer's translations by issuing the **save translations** command. If successful, proceed to Step 8. If the translations were not saved successfully, request that the TSC remotely make a copy of the customer's tape by saving the translations and announcements. When you receive this tape from the TSC, continue with Step 8.
8. With the tape that has the customer's translations set aside, replace the TN770 Memory circuit pack.

   CAUTION:
   Make sure that you are using the customer's existing tape drive and tape and not the tape made in Step 7.

   - Power down the system.
   - Replace the TN770 Memory circuit pack.
   - Power up the system.
   - If the existing tape cannot bring up the system with the customer's translations, replace the tape drive and tape with a new tape drive and the tape made in Step 7. Reboot the system again.
   - If the tape made in Step 7 cannot bring up the system with the customer's translations, proceed to Step 9.
   - If the system comes up with the customer's translations, enter the **test tape long repeat 3** command.

   If all tests pass:

   The problem was a defective Memory circuit pack. If the tape was replaced, the Memory circuit pack and the tape may be defective.

   If any test failed, proceed to Step 9.
9. Replace the TN773 Processor circuit pack.
   - Power down the system.
   - Reinsert the original TN770 Memory circuit pack.
   - Replace the TN773 Processor circuit pack.

- Power up the system.
- If the system boots up with the customer's translations, enter the **test tape long repeat 3** command.

If all tests pass:

The problem was a defective TN773 Processor circuit pack. The TN770 Memory circuit pack is working fine.

If any test failed or if the system cannot be brought back into service successfully, proceed to Step 10.

10. Replace the TN770 Memory circuit pack. Use both the new Memory circuit pack and the new Processor circuit pack.
    - Power down the system.
    - Replace the TN770 Memory circuit pack.
    - Power up the system.
    - If the system comes up with the customer's translations, issue the **test tape long repeat 3** command.

    If all tests pass:

    The problem was a defective Memory circuit pack and a defective Processor circuit pack.

    If any test still fails, escalate the problem.

For High or Critical Reliability Systems

NOTE:
Before performing the following repair procedures, refer to the ''Circuit Pack Replacement Procedure'' section in Chapter 6, ''Reliability Systems: A Maintenance Aid'' for instructions on how to replace a circuit pack in a High or Critical Reliability System.

Make sure that the SPE that has the alarmed tape/tape drive is the Standby SPE before replacing the Processor circuit pack or the Memory circuit pack.

11. Replace the TN770 Memory circuit pack on the STANDBY control carrier.
    - Replace the TN770 Memory circuit pack (see the previous Note).
    - Test the tape in the Standby control carrier by issuing the **test tape [a|b] long repeat 3** command, where "[a|b]" is the Standby control carrier.

    If all tests pass:

    The problem was a defective Memory circuit pack.

    If any test failed, proceed to Step 12.

12. Replace the TN773 Processor circuit pack on the STANDBY control carrier.
    - Reinsert the original TN770 Memory circuit pack.
    - Replace the TN773 Processor circuit pack (see the previous Note).
    - Test the tape in the Standby Control Carrier by issuing the **test tape [a|b] long repeat 3** command, where “[a|b]” is the Standby control carrier.

    If all tests pass:

    The problem was with the TN773 Processor circuit pack.

    If any test failed, proceed to Step 13.

13. Replace the TN770 Memory circuit pack on the STANDBY control carrier. Use both the new Memory circuit pack and the new Processor circuit pack.
    - Replace the Memory circuit pack (see the previous Note).
    - Test the tape in the Standby Control Carrier by issuing the **test tape [a|b] long repeat 3** command, where “[a|b]” is the Standby control carrier.

    If all tests pass:

    The problem was a defective Memory circuit pack and a defective Processor circuit pack.

    If any test still fails, the problem could be with other control carrier circuit packs. Replace each circuit pack, one at a time, until all the tape tests pass. If the problem persists, escalate the problem.

TAPE-DAT (Tape Consistency)

MO Name (in Alarm Log)	Alarm Level	Initial Command to Run	Full Name of MO
TAPE-DAT	MINOR	test tape a|b l	Tape Consistency

In High and Critical Reliability systems, the system software translations, as well as other information, can be stored on two tapes: one in the Active SPE and one in the Standby SPE. In order to flag a problem when these tapes become mismatched, Tape Consistency monitors the translations, announcements, update files, and software vintage number on both tapes in a High or Critical Reliability PPN system. If the translation time stamp, announcement time stamp, and update file time stamp and identifiers on the two tapes are not the same and/or if the software vintage numbers do not match, an alarm is raised. The software vintage can be displayed via the **list configuration software-vintage** command. The Tape Consistency Test is run on system technician command and once a week as part of daily Standby SPE maintenance. Tape Consistency does not apply and does not exist in Standard systems.

Error Log Entries and Test to Clear Values

Table 10-606. Tape Consistency Error Log Entries

Error Type	Aux Data	Associated Test	Alarm Level	On/Off Board	Test to Clear Value
0[1]	0	Any	Any	Any	test tape a/b l
8 or 16	8 or 16	Tape Consistency Test (#421)	WARNING	OFF	test tape a/b l
1-7, 9-15, 17-86	8 or 16	Tape Consistency Test (#421)	MINOR	OFF	test tape a/b l

1 Run the Short Test Sequence first. If all tests pass, run the Long Test Sequence. Refer to the appropriate test description and follow the recommended procedures.

Notes:

a. An “8” in the log refers to carrier A and a “16” refers to carrier B. The Aux Data field records which SPE was active at the time the Tape Consistency Test failed.

System Technician-Demanded Tests: Descriptions and Error Codes

Always investigate tests in the order presented in the table below when inspecting errors in the system. By clearing error codes associated with the *Tape Diagnostic Test,* for example, you may also clear errors generated from other tests in the testing sequence.

Order of Investigation	Short Test Sequence	Long Test Sequence	D/ND[1]
Tape Reset Test (#67) (a)		X	ND
Tape DMA Latch Test (#230) (a)	X	X	ND
Tape Diagnostic Test (#66) (a)	X	X	ND
Tape Read/Write Test (#65) (a) (b)		X	ND
Tape Block Error Test (#692) (a) (b)		X	ND
Tape Status Test (#69) (a)	X	X	ND
Tape Translation Status Test (#505) (a)		X	ND
TAPE-DAT Tape Consistency Test (#421) (c)		X	ND

1 D = Destructive; ND = Nondestructive

Notes:

a. See TAPE (Tape Unit) Maintenance documentation for this test description.

b. This test does not run in release G3iV1 EDI 7.0 or later.

c. The Tape Consistency Test does not run in a Standard system.

Tape Data Consistency Check Test (#421)

The software vintage number, translation time stamps, announcement time stamps, and update file time stamps and identifiers are read off both tapes and compared. If the comparison shows any discrepancy, TAPE-DAT is alarmed. This test is run in a High or Critical Reliability Option system. The test is run as part of the **test tape long** and as part of weekly TAPE maintenance.

Table 10-607. TEST #421 Tape Data Consistency Check Test

Error Code	Test Result	Description/Recommendation
0	ABORT	The test timed out without completing. This error can occur when the system is heavily loaded and the test is not allocated sufficient time to run. 1. Rerun the test when the system is less busy and is not running standby maintenance.
1029 1030 2011 2012 2013 2014 2015 2016 2017 2018 2019 2020 2021 2022 2023 2024 2025 2051	ABORT	Refer to the STBY-SPE (Standby SPE) Maintenance documentation for a description of these error codes.
9005	ABORT	Internal system error 1. Retry the command at 1-minute intervals a maximum of 5 times.
35498	ABORT	Difficulty was encountered trying to send information between the SPEs.
35512	ABORT	The Standby SPE cannot be put into maintenance mode. 1. Resolve all DUPINT (Duplication Interface Circuit Pack), SHDW-LNK (Memory Shadowing Link), SHDW-CIR (Common Shadow Circuit), and STBY-SPE (Standby SPE) alarms. 2. Retry the command.
35514	ABORT	Internal system error 1. Retry the command at 1-minute intervals a maximum of 5 times.

Continued on next page

Table 10-607. TEST #421 Tape Data Consistency Check Test — *Continued*

Error Code	Test Result	Description/Recommendation
35534	ABORT	Could not allocate the tape drive (could be active or standby) because another tape operation was in progress. 1. Wait 10 minutes, and retry the command.
35535	ABORT	Could not access the tape (could be active or standby). 1. The tape may be damaged or missing. Resolve all problems with all tape tests in the Long Test Sequence for both tapes. 2. Repeat the test.
1	FAIL	The standby translations are out-of-date. The translations on the Standby SPE (tape) are older than those on the Active SPE (tape).
2	FAIL	The Active SPE translations are out-of-date. 1. Issue the **save translations** command. If the translation save passes on both SPEs, proceed to Step 2. 2. Run **test tape long** again to resolve the alarms.
3	FAIL	The load vintages are different in both SPEs.
4	FAIL	The load vintages are different in both SPEs.
5	FAIL	The load vintages and translations are different in both SPEs. The Active SPE has the most current translations.
6	FAIL	The load vintages and translations are different in both SPEs. The Standby SPE has the most current translations. 1. Determine which tape contains the desired software release by issuing **list configuration software long**. Obtain another tape of the same software release. Install both tapes, and issue the **save translations** command. If there is a TN750 Announcement circuit pack in the system, issue **save announcements**. If the translation (and announcement) save passes on both SPEs, proceed to Step 2. 2. Run **test tape long** again to resolve the alarms.
8	FAIL	The announcements are different in both SPEs. The Active SPE has the most current announcements. 1. Issue **save announcements** to save announcements in both SPEs. If the announcement save passes on both SPEs, proceed to Step 2. 2. Issue **test tape long** again to resolve the alarms.

Continued on next page

Table 10-607. TEST #421 Tape Data Consistency Check Test — *Continued*

Error Code	Test Result	Description/Recommendation
9	FAIL	The translations and announcements are different in both SPEs. The Active SPE is the most current.
10	FAIL	The translations and announcements are different in both SPEs. The Standby SPE has the most current translations, and the Active SPE has the most current announcements. 1. Issue **save translations** to save translations in both SPEs. 2. Issue **save announcements** to save announcements in both SPEs. 3. If both the translation save and announcement save pass on both SPEs, issue **test tape long** again to resolve the alarms.
12	FAIL	Load vintages and announcements are different in both SPEs. The Active SPE has the most current announcements.
13	FAIL	The translations, announcements, and load vintages are different in both SPEs. The Active SPE has the most current translations and announcements.
14	FAIL	The translations, announcements, and load vintages are different in both SPEs. The Standby SPE has the most current translations, and the Active SPE has the most current announcements. 1. Follow the procedures for Error Code 4. Be sure to issue **save announcements**.
16	FAIL	Announcements are different in both SPEs. The Standby SPE has the most current announcements. 1. Follow the procedures for Error Code 8.

Continued on next page

Table 10-607. TEST #421 Tape Data Consistency Check Test — *Continued*

Error Code	Test Result	Description/Recommendation
17	FAIL	The translations and announcements are different in both SPEs. The Active SPE has the most current translations and the Standby SPE has the most current announcements.
18	FAIL	The translations and announcements are different in both SPEs. The standby SPE is the most current. 1. Follow the procedures for Error Code 9.
20	FAIL	Load vintages and announcements are different in both SPEs. The Standby SPE has the most current announcements.
21	FAIL	The translations, announcements, and load vintages are different in both SPEs. The Active SPE has the most current translations and the Standby SPE has the most current announcements.
22	FAIL	The translations, announcements, and load vintages are different in both SPEs. The Standby SPE has the most current translations and announcements. 1. Follow the procedures for Error Code 4. Be sure to issue the **save announcements** command.
32	FAIL	The update files are different in both SPEs. The update file on the Active SPE is the more current one. 1. Have INADS issue **copy update-file**. If the update file copy passes, proceed to Step 2. 2. Reissue **test tape long** to resolve the alarms.
33	FAIL	The update files and translations are different in both SPEs. The Active SPE has the most current update file and translations.
34	FAIL	The update files and translations are different in both SPEs. The Active SPE has the most current update file, and the Standby SPE has the most current translations. 1. Issue the **save translations** command to save translations on both SPEs. 2. Have INADS issue **copy update-file** to copy the update file from the Active SPE to the Standby SPE. 3. Reissue **test tape long** to resolve the alarms.

Continued on next page

Table 10-607. TEST #421 Tape Data Consistency Check Test — *Continued*

Error Code	Test Result	Description/Recommendation
36	FAIL	The update files and load vintages are different in both SPEs. The Active SPE has the most current update file.
37	FAIL	The update files, load vintages, and translations are different in both SPEs. The Active SPE has the most current update file and translations.
38	FAIL	The update files, load vintages, and translations are different in both SPEs. The Active SPE has the most current update file, and the Standby SPE had the most current translations. 1. Follow the procedures for Error Code 4 to get the correct load vintage. After running the **test tape long** command, check for Error Code #32 or #64. Follow the recovery procedure under the applicable error code.
40	FAIL	The update files and announcements are different in both SPEs. The Active SPE has the most current update file and announcements. 1. Issue the **save announcements** command to save announcements on both SPEs. 2. Have INADS issue the **copy update-file** command to copy the update file from the Active to the Standby SPE. 3. Issue **test tape long** again to resolve the alarms.
41	FAIL	The update files, translations, and announcements are different in both SPEs. The Active SPE has the most current update file, translations, and announcements.
42	FAIL	The update files, translations, and announcements are different in both SPEs. The Active SPE has the most current update file and announcements, and the Standby SPE has the most current translations. 1. Issue the **save translations** command. 2. Issue the **save announcements** command. 3. Have INADS issue **copy update-file** to copy the update file from the Active to the Standby SPE. 4. Reissue **test tape long** to resolve the alarms.

Continued on next page

Table 10-607. TEST #421 Tape Data Consistency Check Test — *Continued*

Error Code	Test Result	Description/Recommendation
44	FAIL	The update files, load vintages, and announcements are different in both SPEs. The Active SPE has the most current update file and announcements.
45	FAIL	The update files, load vintages, translations, and announcements are different in both SPEs. The Active SPE has the most current update file, translations, and announcements.
46	FAIL	The update files, load vintages, translations, and announcements are different in both SPEs. The Active SPE has the most current update file and announcements, and the Standby SPE has the most current translations. 1. Follow the procedures for Error Code 4 to get the correct load vintage. Be sure to save announcements. After running **test tape long** , check for Error Code #32 or #64. Follow the recovery procedure under the applicable error code.
48	FAIL	The update files and announcements are different in both SPEs. The Active SPE has the most current update file, and the Standby SPE has the most current announcements. 1. Follow the procedures for Error Code 40.
49	FAIL	The update files, translations, and announcements are different in both SPEs. The Active SPE has the most current update file and translations, and the Standby SPE has the most current announcements.
50	FAIL	The update files, translations, and announcements are different in both SPEs. The Active SPE has the most current update file, and the Standby SPE has the most current translations and announcements. 1. Follow the procedures for Error Code #41.

Continued on next page

Table 10-607. TEST #421 Tape Data Consistency Check Test — *Continued*

Error Code	Test Result	Description/Recommendation
52	FAIL	The update files, load vintages, and announcements are different in both SPEs. The Active SPE has the most current update file, and the Standby SPE has the most current announcements.
53	FAIL	The update files, load vintages, translations, and announcements are different in both SPEs. The Active SPE has the most current update file, and translations, and the Standby SPE has the most current announcements.
54	FAIL	The update files, load vintages, translations, and announcements are different in both SPEs. The Active SPE has the most current update file and the Standby SPE has the most current translations and announcements. 1. Follow the procedures for Error Code 4 to get the correct load vintage. After running the **test tape long** command, check for Error Code #32 or #64. Follow the recovery procedure under the applicable error code.
64	FAIL	The update files are different in both SPEs. The update file on the standby SPE is most current. 1. If you are on site with the switch, interchange the Active SPE tape with the Standby SPE tape. If you are not on site with the switch, issue **reset system interchange**. This action causes the Standby SPE to become the Active SPE. Refer to the “Reset Commands” section in Chapter 8 for information on the side effects of a processor interchange. 2. Have INADS issue **copy update-file** . If the update file copy passes, proceed to Step 3. 3. Reissue **test tape long** to resolve the alarms.
65	FAIL	The update files and translations are different in both SPEs. The Standby SPE has the most current update file, and the Active SPE has the most current translations.
66	FAIL	The update files and translations are different in both SPEs. The Standby SPE has the most current update file and translations. 1. Issue the **save translations** command to save translations on both SPEs. 2. Follow the procedures for Error Code #64.

Continued on next page

Table 10-607. TEST #421 Tape Data Consistency Check Test — *Continued*

Error Code	Test Result	Description/Recommendation
68	FAIL	The update files and load vintages are different in both SPEs. The Standby SPE has the most current update file.
69	FAIL	The update files, load vintages, and translations are different in both SPEs. The Standby SPE has the most current update file, and the Active SPE has the most current translations.
70	FAIL	The update files, load vintages, and translations are different in both SPEs. The Standby SPE has the most current update file and translations. 1. Follow the procedures for Error Code #4 to get the correct load vintage. After running the **test tape long** command, check for Error Code #32 or #64. Follow the recovery procedure under the applicable error code.
72	FAIL	The update files and announcements are different in both SPEs. The Standby SPE has the most current update file and the Active SPE has the most current announcements. 1. Issue the **save announcements** command to save announcements on both SPEs. 2. Follow the procedures for Error Code #64.
73	FAIL	The update files, translations, and announcements are different in both SPEs. The Active SPE has the most current translations and announcements, and the Standby SPE has the most current update file.
74	FAIL	The update files, translations, and announcements are different in both SPEs. The Active SPE has the most current announcements, and the Standby SPE has the most current update file and translations. 1. Issue the **save translations** command. 2. Issue the **save announcements** command. 3. Follow the procedures for Error Code #64.

Continued on next page

Table 10-607. TEST #421 Tape Data Consistency Check Test — *Continued*

Error Code	Test Result	Description/Recommendation
76	FAIL	The update files, load vintages, and announcements are different in both SPEs. The Active SPE has the most current announcements, and the Standby SPE has the most current update file.
77	FAIL	The update files, load vintages, translations, and announcements are different in both SPEs. The Active SPE has the most current translations and announcements, and the Standby SPE has the most current update file.
78	FAIL	The update files, load vintages, translations, and announcements are different in both SPEs. The Active SPE has the most current announcements, and the Standby SPE has the most current update file and translations. 1. Follow the procedures for Error Code #4 to get the correct load vintage. After running the **test tape long** command, check for Error Code #32 or #64. Follow the recovery procedure under the applicable error code.
80	FAIL	The update files and announcements are different in both SPEs. The Standby SPE has the most current update file and announcements. 1. Issue the **save announcements** command to save announcements on both SPEs. 2. Follow the procedures for Error Code #64.
81	FAIL	The update files, translations, and announcements are different in both SPEs. The Active SPE has the most current translations, and the Standby SPE has the most current update file and announcements.
82	FAIL	The update files, translations, and announcements are different in both SPEs. The Standby SPE has the most current update file, translations, and announcements. 1. Issue the **save translations** command. 2. Issue the **save announcements** command. 3. Follow the procedures for Error Code #64.

Continued on next page

Table 10-607. TEST #421 Tape Data Consistency Check Test — *Continued*

Error Code	Test Result	Description/Recommendation
84	FAIL	The update files, load vintages, and announcements are different in both SPEs. The Standby SPE has the most current update file and announcements.
85	FAIL	The update files, load vintages, translations, and announcements are different in both SPEs. The Active SPE has the most current translations, and the Standby SPE has the most current update file and announcements.
86	FAIL	The update files, load vintages, translations, and announcements are different in both SPEs. The Standby SPE has the most current update file, translations, and announcements. 1. Follow the procedures for Error Code #4 to get the correct load vintage. After running the **test tape long** command, check for Error Code #32 or #64. Follow the recovery procedure under the applicable error code.
	PASS	The load vintages, translations, announcements, and update files are the same.

TBRI-BD (TN2185 ISDN Trunk-Side BRI)

MO Name (in Alarm Log)	Alarm Level	Initial Command to Run[1]	Full Name of MO
TBRI-BD	MINOR	test board PCSS l r#	TBRI-BD

1 Where P is the port network number (1 for PPN, 2 or 3 for EPN), C is the carrier designation (A, B, C, D, or E), and SS is the carrier slot address where the circuit pack is located (1, 2, and so forth).

The TN2185 circuit pack contains eight, 4-wire ports that interface to the network at the ISDN S/T reference point over two 64 Kb/s channels (B1 and B2) and over a 16Kb/s signaling (D) channel. The B1 and B2 channels can be simultaneously circuit switched, or individually packet switched. Only one channel per trunk can be packet switched due to Packet Processing Element (PPE) limitations. The D channel is either circuit switched or packet switched. Packet switching uses the PPE to combine all D channels into a single physical channel, which is then routed via the concentration highway to the Network Control Element (NCE) and then to the TDM bus. The circuit-switched connections have a Mu-law or A-law option for voice and operate as 64Kb/s clear data channels. The packet-switched channels support the LAPD protocol and conform with the CCITT Q.920 Recommendations for D-channel signaling.

LEDs

The three LEDs on the circuit pack's faceplate indicate board status. When illuminated, the red LED indicates a board failure or a major or minor on-board alarm, the green LED indicates that testing is in progress, and the amber LED indicates that the board is in use.

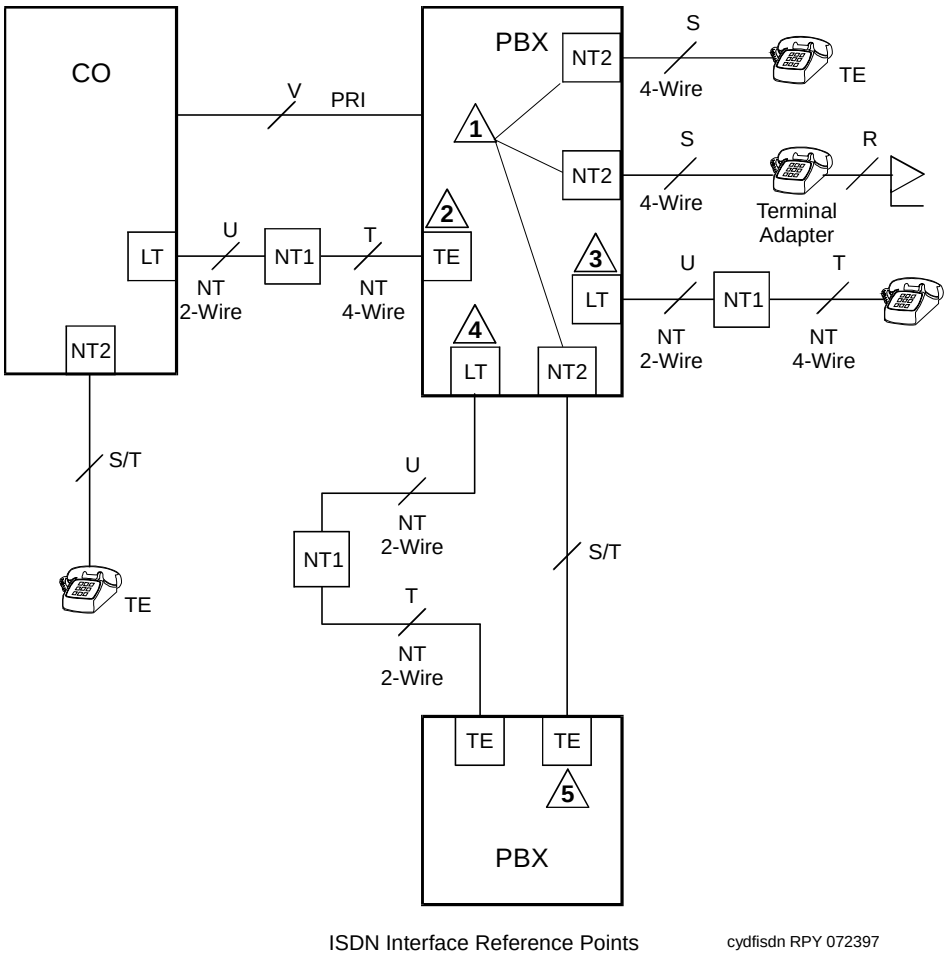

Figure 10-95. Integrated Trunk-Side BRI, ISDN Interface Reference Points

ISDN Interface Reference Point definitions:

LT	Logical Terminal
V	Primary Rate user/network (asymmetrical) trunk interface. The Avaya DEFINITY Server is capable of acting as the user or as the network side of this 1.544 - or 2.048-Mbps interface.
R	Interface between Terminal Equipment and Network Termination
S	Basic Rate network-side 4-wire line interface
S/T	4-wire Basic Rate connection to a Network Termination[1].
T	4-wire Basic Rate interface to a Network Termination.[2]
TE	Terminal Equipment
U	Basic Rate network-side 2-wire line interface.
1	TN556B ISDN-BRI 4-Wire S/T-NT Line (A-law)
2	TN 2185 ISDN-BRI 4-Wire S Interface (Trunk Side)
3	TN2198 ISDN-BRI 2-Wire U Interface
4	TN2198 ISDN-BRI 2-Wire U Interface
5	TN 2185 ISDN-BRI 4-Wire S Interface (Trunk Side)

1 Network Termination 2 (NT2), that terminates Layer 1 and higher layers. PBXs, LANs, and terminal controllers typically provide NT2 functionality including protocol handling and multiplexing for Layers 2 and 3.

2 Network Termination 1 (NT1), that terminates Layer 1 and monitors maintenance, performance, timing, power transfer, multiplexing, and multi-drop termination with contention resolution.

Hardware Error Log Entries and Test to Clear Values

Table 10-608. TBRI-BD Error Log Entries

Error Type	Aux Data	Associated Test	Alarm Level	On/Off Board	Test to Clear Value
0[1]	0	Any	Any	Any	test board PCSS sh r 1
1 (a)	Any	None	MINOR	ON	
257 (b)	65535	Control Channel Loop Test (#52)	MINOR	ON	test board PCSS r 20
513 (c)	4352 to 4357		None	ON	
769 (d)	4358				

Continued on next page

Table 10-608. TBRI-BD Error Log Entries — *Continued*

Error Type	Aux Data	Associated Test	Alarm Level	On/Off Board	Test to Clear Value
1025 (e)	4363	NPE/NCE Audit Test (#50)	None	ON	
1291 (f)	4359	Clear Error Counters (#270)	MINOR	ON	
1294 (g)	46088 to 46096	SAKI Sanity Test (#53)	MINOR	ON	See (h)
1537 (h)	46082		MINOR	ON	
1793 (i)	46080		MINOR	ON	
1794 (i)	46094		MINOR	ON	
1795 (i)	46085		MINOR	ON	
2305 (j)	46104		None	ON	
2306 (i)	46081		None	ON	
3330 (j)	46083		MINOR	OFF	
3586 (k)			MINOR	OFF	
3840(l)	4096 to 4101				
3842 (m)	46095				
3843 (n)	46097				

1 Run the Short Test Sequence first. If all tests pass, run the Long Test Sequence. Refer to the appropriate test description and follow the recommended procedures.

Notes:

a. The circuit pack stopped functioning or is physically removed from the system.

NOTE:
This alarm logs approximately 11 minutes after removing the circuit pack and/or the SAKI Sanity Test (#53) fails.

If the circuit pack is not in the system, insert a circuit pack in the same slot as the error indicates. See note (g).

b. Transient communication problems between the switch and this circuit pack. Execute the **test board PCSS** command and refer to the repair procedures for the Control Channel Loop Around Test (#52).

c. On-board hardware failure. Aux data values correspond to the following detected errors:

4352	External RAM error
4353	Internal RAM error
4355	ROM Checksum error
4357	Instruction set error

Reset the circuit pack with the **busyout board PCSS** and **reset board PCSS** commands. When reset, the circuit pack executes a set of tests to detect the presence of any of the faults listed above. Detection of one of these errors during initialization causes the circuit pack to lock-up and appear insane to the system. See the repair procedure in Note (a).

d. The circuit pack detects a program logic error. While no action is required, this error can lead to other errors against this circuit pack.

e. The circuit pack cannot update and read back NPE/NCE memory. This error can be ignored, but may lead to other errors against this circuit pack.

f. The TN2185 board notifies maintenance software that it has detected a parity error while accessing its dynamic RAM (that stores the board's translation information and downloadable application firmware). Maintenance software resets the circuit pack.

g. Unable to write LAN Translation RAM Error (internal memory access error). Translation RAM locations for the call connection attempt are not available, and one or more RAM locations are bad due to a translation RAM read-back error. Reset the circuit pack with the **busyout board PCSS** and **reset board PCSS** commands. If the Circuit Pack Restart Test (#594) passes, then the on-board circuitry is healthy. Retire the alarm with the **test board PCSS long clear** command. If the Circuit Pack Restart Test (#594) fails, replace the circuit pack.

h. Frame overrun at Packet Bus interface. Due to an on-board fault or by faulty data received on one of the circuit pack's external ports. If any of the ports on this circuit pack is alarmed, refer to the repair procedures for those maintenance objects. If this error persists, maintenance software removes the board from service; replace the circuit pack.

i. The circuit pack is has problems transmitting/receiving data to/from the Packet Bus.

1793	Parity errors are detected when transmitting data to the Packet Bus.
1794	Packet Bus transmit buffers overflow.
1795	Circuit pack cannot find end of frame when transmitting to Packet Bus. Clear the alarm with: **busyout board PCSS**, **reset board PCSS**, **test board PCSS long clear**, **release board PCSS**. If the error recurs within 10 minutes, replace the circuit pack.
2306	Error in a received frame from the Packet Bus, most likely caused by a packet bus problem, but may be due to a circuit pack fault. An invalid Link Access Procedure Data (LAPD) frame error occurs if the frame contains a bad Cyclical Redundancy Check (CRC). If bus parity errors occur, run the LAN Receive Parity Error Counter Test (#595) to determine if the condition has cleared. Refer to the maintenance documentation to determine if the problem is isolated to this circuit pack or is caused by Packet Bus faults.

j. Error Type (2305, 3330): A critical failure in the Circuit Pack's Packet Bus interface. Possible causes include either a Packet Bus fault or an on-board fault, for example, the board received a bad CRC or invalid DLCI. If the Packet Bus is alarmed, refer to the "*Maintenance Manual*" section for Packet Bus fault location and recommended repair procedures. The number of ISDN circuit packs displaying this error increases the probability of errors due to Packet Bus problems.

   If there are no Packet Bus alarms, reset the circuit pack with the **busyout board PCSS** and **reset board PCSS** commands. If the Circuit Pack Restart Test (#594) passes, then the on-board circuitry is healthy. Retire the alarm with the **test board PCSS long clear** command. If the Circuit Pack Restart Test (#594) fails, replace the circuit pack.

k. The SPE software detects an excessive number of up-link messages from the TN2185 board within a certain time period. To prevent the faulty board from flooding the switch with data, the switch software takes the board out of service and alarms it. The switch software also tells the Archangel to ignore up-link messages from the board.

   When the board is alarmed due to this error, the switch software periodically puts the board back in service and tells the Archangel to process up-link messages from the board. If the problem still exists, the software takes the circuit pack out of service again. If the circuit pack does not exhibit the problem for a certain time period, then maintenance software resolves the alarm and the circuit pack is left in service.

l. The circuit pack received an inconsistent down-link message (a bad header, port number, data, subqualifier, or logical link) over the Control Channel.

m. The board is receiving data from the bus faster than it can distribute the data to its endpoints, causing the FIFO RAM buffer to overflow. This error can occur occasionally due to the statistical sizing of the buffers. If it occurs frequently, it may indicate a LAPD parameter mismatch. LAPD should recover from this problem, but it may degrade the performance of the LAN bus.

   When this error is reported, maintenance reads and clears the board counter and logs the problem in the maintenance error log.

n. Bad translation RAM detected, but the call continues by using another translation location. The circuit pack reports this error when it cannot update NPE/NCE memory and read it back. This error is not service-affecting and can be ignored, but can lead to other types of errors against this circuit pack.

System Technician-Demanded Tests: Descriptions and Error Codes

When inspecting errors in the system, always investigate tests in the order listed below. By clearing error codes associated with the *Control Channel Loop Around Test,* for example, you may also clear errors generated from other tests in the testing sequence.

Order of Investigation	Short Test Sequence	Long Test Sequence	D/ND[1]
Control Channel Loop-Around Test (#52)	X	X	ND
NPE/NCE Audit Test (#50)		X	ND
LAN Receive Parity Error Counter Test (#595)		X	ND

1 D = Destructive; ND = Nondestructive

Control Channel Loop Around Test (#52)

Refer to the repair procedure described in the “XXX-BD (Common Port Circuit Pack)” section.

NPE /NCE Audit Test (#50)

Refer to the repair procedure described in the “XXX-BD (Common Port Circuit Pack)” section.

SAKI Sanity Test (#53)

This test is destructive.

Refer to the repair procedure described in the “XXX-BD (Common Port Circuit Pack)” section. This test is only run as a part of a reset board procedure.

LAN Receive Parity Error Counter Test (#595)

This test is nondestructive. The test reads and clears the circuit pack's LAN Receive Parity Error Counter. This counter increments when it detects a parity error from the Packet Bus. These errors may indicate problems with a circuit pack, Packet Bus, or with another circuit pack on the bus. Use this test to verify the repair.

Table 10-609. TEST #595 LAN Receive Parity Error Counter Test

Error Code	Test Result	Description/Recommendation
2000	ABORT	Response to the test was not received from the circuit pack within the allowable time period. 1. If the test aborts repeatedly a maximum of 5 times, reset the circuit pack via the **busyout board PCSS** and **reset board PCSS** commands. 2. If the test aborts again, replace the circuit pack.
2100	ABORT	Could not allocate the necessary system resources to run this test.

Continued on next page

Table 10-609. TEST #595 LAN Receive Parity Error Counter Test — *Continued*

Error Code	Test Result	Description/Recommendation
2012	ABORT	Internal system error. 1. Retry the command at 1-minute intervals a maximum of 5 times.
1-10	FAIL	The circuit pack is still detecting errors of this type. The error code indicates the value of the on-board error counter. 1. Retry the command at 1-minute intervals a maximum of 5 times. 2. If the test continues to fail, verify the validity of the Packet Bus. Run the Packet Bus maintenance test with the **test pkt P long** command. If any Packet Bus tests fail, refer to the “PKT-BUS (Packet Bus)” section for recommended repair procedures. 3. If the Packet Bus test passes, check the validity of the circuit pack. Execute a test that involves data transmission onto the Packet Bus. For example, the **test port PCSSpp** command may use the connectivity tests of the BRI-PORT maintenance object. If the test fails, refer to the repair procedures; otherwise, proceed to the next step. 4. Other circuit packs on the Packet Bus may be causing of the parity error. Use the **display errors** command to check the Error Log for alarmed other circuit packs. Resolve any alarms for other circuit packs as well. Rerun the LAN Receive Parity Error Counter Test (#595).
	PASS	No errors detected.

TBRI-PT (TN2185 ISDN Trunk-Side BRI Port)

MO Name (in Alarm Log)	Alarm Level	Initial Command to Run[1]	Full Name of MO
TBRI-PT	MAJOR	test port PCSS l r#	TBRI-PT
TBRI-PT	MINOR	test port PCSS l r#	TBRI-PT
TBRI-PT	WARNING	test port PCSS s r#	TBRI-PT

1 Where P is the port network number (1 for PPN, 2 or 3 for EPN), C is the carrier designation (A, B, C, D, or E), and SS is the carrier slot address where the circuit pack is located (1, 2, and so forth).

This document describes the port maintenance features of the DEFINITY ISDN Trunk-side BRI board (TN2185). The circuit pack provides 8 S/T ISDN 2B+D ports that interface to either the central office or another PBX.

The TN2185 circuit pack contains eight, 4-wire ports that interface to the network at the ISDN S/T reference point over two 64 Kb/s channels (B1 and B2) and over a 16Kb/s signaling (D) channel. The B1 and B2 channels can be simultaneously circuit switched, or individually packet switched. Only one channel per trunk can be packet switched due to Packet Processing Element (PPE) limitations. The D channel is either circuit switched or packet switched. Packet switching uses the PPE to combine all D channels into a single physical channel, which is then routed via the concentration highway to the Network Control Element (NCE) and then to the TDM bus. The circuit-switched connections have a Mu-law or A-law option for voice and operate as 64Kb/s clear data channels. The packet-switched channels support the LAPD protocol and conform with the CCITT Q.920 Recommendations for D-channel signaling.

LEDs

The three LEDs on the circuit pack's faceplate indicate board status. When illuminated, the red LED indicates a board failure or a major or minor on-board alarm, the green LED indicates that testing is in progress, and the amber LED indicates that the board is in use.

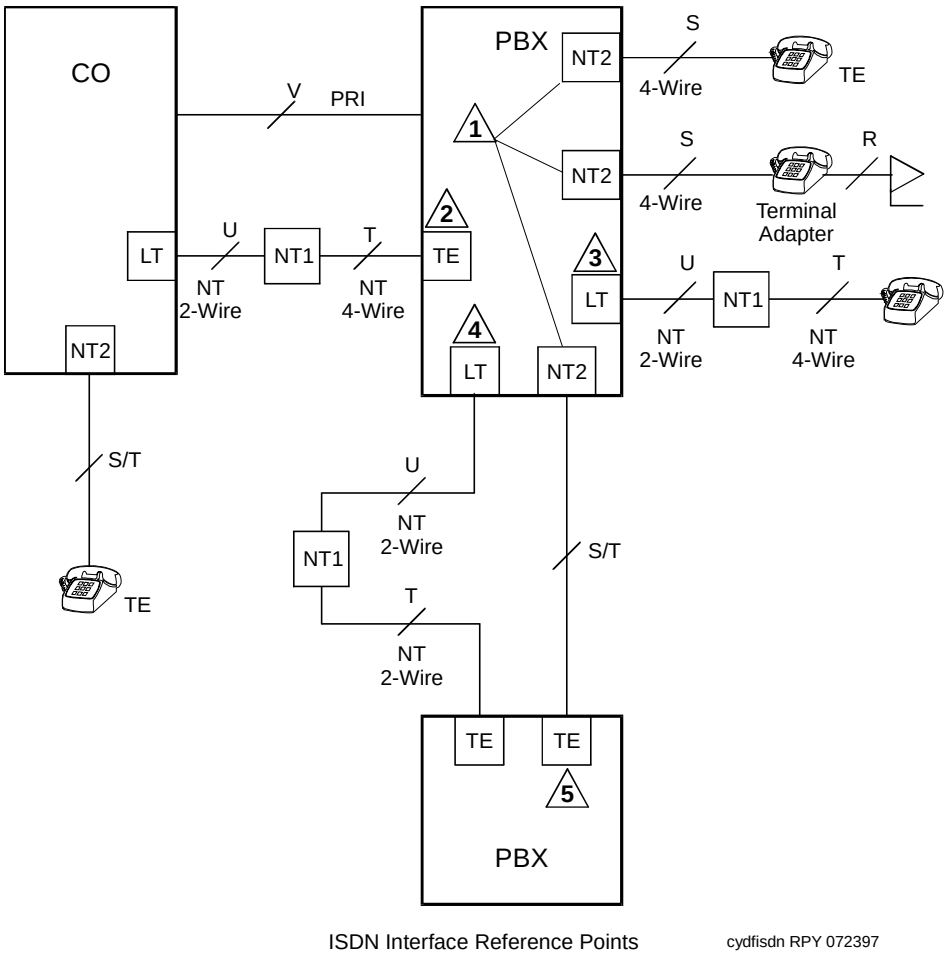

Figure 10-96. Integrated Trunk-Side BRI, ISDN Interface Reference points

ISDN Interface Reference Point definitions:

LT	Logical Terminal
V	Primary Rate user/network (asymmetrical) trunk interface. The Avaya DEFINITY Server is capable of acting as the user or as the network side of this 1.544 - or 2.048-Mbps interface.
R	Interface between Terminal Equipment and Network Termination
S	Basic Rate network-side 4-wire line interface
S/T	4-wire Basic Rate connection to a Network Termination[1].
T	4-wire Basic Rate interface to a Network Termination.[2]
TE	Terminal Equipment
U	Basic Rate network-side 2-wire line interface.
1	TN556B ISDN-BRI 4-Wire S/T-NT Line (A-law)
2	TN 2185 ISDN-BRI 4-Wire S Interface (Trunk Side)
3	TN2198 ISDN-BRI 2-Wire U Interface
4	TN2198 ISDN-BRI 2-Wire U Interface
5	TN 2185 ISDN-BRI 4-Wire S Interface (Trunk Side)

1 Network Termination 2 (NT2), that terminates Layer 1 and higher layers. PBXs, LANs, and terminal controllers typically provide NT2 functionality including protocol handling and multiplexing for Layers 2 and 3.

2 Network Termination 1 (NT1), that terminates Layer 1 and monitors maintenance, performance, timing, power transfer, multiplexing, and multi-drop termination with contention resolution.

Hardware Error Log Entries and Test to Clear Values

Table 10-610. TBRI-PT Error Log Entries

Error Type	Aux Data	Associated Test	Alarm Level	On/Off Board	Test to Clear Value
0[1]	0	Any	Any	Any	test Port UCSSPP sh r 1
1 (a)		Level 1 Status Test (#1242)	MINOR	OFF	
129[2]					
257(b)					
513 (c)	46222	XMIT FIFO Overflow	MINOR	ON	

Continued on next page

Table 10-610. TBRI-PT Error Log Entries — *Continued*

Error Type	Aux Data	Associated Test	Alarm Level	On/Off Board	Test to Clear Value
514 (d)		XMIT FIFO Overflow (TDM)	MINOR	ON	
769 (e)		Traffic Hyperactivity	MINOR	OFF	
1025 (f)					
1281 (g)		NPE Crosstalk Test (#617)	MINOR	ON	
1537 (h)	46210	CRC error (D-Channel)	MINOR	OFF	
1538 (i)		CRC error (TDM D-Channel)	MINOR	OFF	
1793 (j)		BRI Port Local TDM Looparound Test (#619)	MINOR	ON	
2049 (k)			MINOR	OFF	
2305 (l)		Layer 3 Query (#1243)	MINOR	OFF	
3073 (m)		Slip Query Test (#1244)	MINOR	OFF	
3585 (n)		Receive FIFO Overflow (TDM D-Channel)	Log Only	ON	
3586 (o)					
3587 (p)					
3588 (q)	46223				
3589 (r)					
3590 (s)	46211				
3591 (t)					
3592 (u)					
3841 to 3942 (v)					

1 Run the Short Test Sequence first. If all tests pass, run the Long Test Sequence. Refer to the appropriate test description and follow the recommended procedures.

2 The far-end switch changed the ISDN service state. This may be a temporary condition.

Notes:

a. Loss of continuity of Layer 1 to the far-end. It is assumed that Layer 1 remains active, even when both B-Channels are idle.

   This test determines whether Layer 1 is active or not. If Layer 1 is not active, the test attempts to activate it. If Layer 1 cannot be activated, the port is taken out of service, and the test fails.

b. The D-Channel failed at Layer 2. Expiration of this timer indicates that attempts to bring the failed link back into service have not succeeded and some recovery actions should be taken on the associated B-Channels. Upon expiration, associated in-service B-channels are put in the out-of-service/far end state.

c. Error Type (513): On-board hardware failure. The FIFO RAM buffers have overflowed, indicating a hardware problem.

d. Error Type (514): Transmit FIFO Overflow - This error indicates that the circuit pack is having problems transmitting data to the TDM D-Channel. This error only occurs only a system that switches the packet implementation of the D-channel over the TDM Bus. This error indicates an on board problem related to the packet implementation of the D-Channel (R6.2 and higher).

e. Error Type (769): The port is generating too many uplinks. The link is being suspended.

f. Error Type (1025): An expired timer has created an unexpected event. The timer could be any of the following:

Timer	Event
T3031	ISDN T3031 timeout
T3032	ISDN T3032 timeout
T305	ISDN T305 timeout
T3081	ISDN T3081 timeout
T3082	ISDN T3082 timeout
TL3	Status Inquiry
T304	Setup ACK
T310	Call Proceeding Receive
T313	Connect SEND

g. Error Type (1281): This error occurs when the NPE Crosstalk Test (#617) has failed. The test will be repeated every 15 minutes until it passes. Follow normal trouble shooting procedures for NPE Crosstalk Test (#617). If this does not fix the problem, follow normal escalation procedures.

h. Error Type (1537): The board received a bad Cyclical Redundancy Check (CRC) over the D-Channel. This error is reported on a per-port basis. When the CRC errors exceed 5 within 15 minutes, the port is taken out of service for 5 seconds. If 5 more CRC errors are received within 15 minutes of the first set of 5 errors, the port is taken out of service for 1 minute. If 5 more CRC errors are received within 15 minutes of the previous 5, the port is taken out of service for 15 minutes.

   This error is most likely due to a problem with backplane wiring, a noise source, or no termination (an open circuit). It usually does not indicate a problem with the circuit pack.

   1. Check the backplane wiring.
   2. If the problem persists escalate the problem.

i. Error Type (1538): This error occurs when a frame with a bad CRC is received by the BRI trunk board. This error only occurs on a system that switches the packet implementation of the D-channel over the TDM bus. This error indicates an off board problem related to the packet implementation of the TDM D-Channel (R6.2 and later).

j. Error Type (1793): The BRI Port Local TDM Loop Around Test (#619) failed. Run the Long Test Sequence paying particular attention to the results of the BRI TDM Port Loop Test (#619).

k. Error Type (2049): The Layer 2 Link Query failed. The test is repeated every 15 minutes until it passes.

l. Error Type (2305): The Remote Layer 3 Query failed. The test is repeated every 15 minutes until it passes.

m. Error Type (3073): A frame of information had to be repeated or deleted. Slips usually occur when the received bit rate is not synchronized with the TDM Bus clock.

n. Error Type (3585): The circuit pack detected an overflow of its receive buffers. This error occurs only a system that switches the packet implementation of the D-Channel over the TDM bus. This error indicates an on board problem related to the packet implementation of the TDM D-Channel (R6.2 and higher).

o. Error Type (3586): Each port can support up to three Terminal Endpoint Identifiers (TEIs). Each channel on the port can request a TEI assignment from the switch if it supports ISDN-BRI TEI assignment procedures. If switch services gets a request for a fourth TEI on a port, it reports this event to maintenance software and initiates TEI check procedures on the port. Check to see if the correct number of channels are administered for this port.

   The user side supports automatic TEI assignment by the network. Both fixed and automatic TEI assignment are supported on the network side.

p. Error Type (3587)Service Profiler IDentifier (SPID) value is invalid or is a duplicate of another SPID that is already initialized at Layer 3 on the port. SPIDs are not used on the TN2185 circuit pack. However there will be related events.

q. Error Type (3588): The board receives D-Channel data from the bus faster than it can process the data. The FIFO RAM buffers overflowed. This error occurs occasionally due to the statistical sizing of the buffers; however, frequent occurrences may indicate a LAPD parameter mismatch between the two endpoints of a packet-switched connection. Run the Long Test Sequence paying particular attention to the results of the Receive FIFO Overflow Test (#625).

r. Error Type (3589): The BRI Port Local LAN Loop Around Test (#618) failed. Run the Long Test Sequence and pay particular attention to the results of Test #618.

s. Error Type (3590): An activated BRI port receives a frame containing a DLCI over a D-Channel for which it does not have a translation. This error normally indicates an off-board problem related to a state mismatch between the far-end and the switch. This error is logged only.

t. Error Type (3591): The port is generating too many uplinks and is taken out of service.

u. Error Types (3841-3942): Table 10-611 on page 10-1669 contains the received ISDN cause values for Errors 3841-3942 that are recorded in the hardware error logs. Unless otherwise stated, the cause values are D-Channel events. The aux data field shows which port caused the error.

Table 10-611. Cause Values for Error 3841-3942

Value	Type of Problem	Meaning
2	admin	No route to specific transit network
3	admin	No route to destination (or Germany bcap not imp)
6	admin	Channel unacceptable
18	switch problems	No user responding
38	switch problems	Network failure
50	subscription	Requested facility not subscribed
52	admin	Outgoing calls barred
54	admin	Incoming calls barred
62	subscription	Service not authorized
63	admin/sub	Service/option not available
65	admin/sub	Bearer capability not implemented
66	admin/sub	Channel type not implemented
69	admin/sub	Requested facility not implemented
70	admin/sub	Only restricted digital BC available
79	admin	Service/option not implemented
88	admin	Incompatible destination
102	switch problems	Recovery on timer expired

System Technician-Demanded Tests: Descriptions and Error Codes

When inspecting errors in the system, always investigate tests in the order listed below. By clearing error codes associated with the *Control Channel Loop Around Test,* for example, you may also clear errors generated from other tests in the testing sequence.

Order of Investigation	Short Test Sequence	Long Test Sequence	D/ND[1]
BRI Local LAN Port Loop Around Test (#618)		X	D
BRI TDM Port Loop Around Test (#619)		X	D
L1 State Query Test (#1242)	X	X	D
CRC Error Counter Test (#623)		X	ND
Receive FIFO Overflow Test (#625)		X	ND
Layer 3 Query Test (#1243)		X	ND
Slip Query Test (#1244)	X	X	ND
Clear Error Counters Test (#270)	X	X	ND
NPE Crosstalk Test (#617)		X	D

1 D = Destructive; ND = Nondestructive

Clear Error Counters Test (#270)

This test is nondestructive.

This test clears the various error counters associated with each TBRI-PT. This test passes if maintenance software is able to successfully send the downlink messages; the test aborts otherwise.

Table 10-612. TEST #270 Clear Error Counters

Error Code	Test Result	Description/Recommendation
Any	ABORT	Maintenance could not send the downlink message.
	PASS	The message to clear the error counters of the TBRI-PT maintenance object has been sent.

NPE Crosstalk Test (#617)

This test is conditionally destructive.

One or more NPEs reside on each circuit pack with a TDM Bus interface. The NPE controls port connectivity and gain and provides conferencing functions on a per-port basis. The NPE Crosstalk Test verifies that this port's NPE channel talks on the selected time slot and never crosses over to time slots reserved for other connections. If the NPE is not working correctly, one-way and noisy connections may be observed. This test is part of a port's Long Test Sequence and takes approximately 20 to 30 seconds to complete. Crosstalk testing is performed on both B-channels (B1 and B2) associated with a BRI port. If this test fails on either channel, any channel connected to the port is taken out-of-service. This test aborts if the port and its associated channels are not in the idle state.

Table 10-613. TEST #617 NPE Crosstalk Test

Error Code	Test Result	Description/Recommendation
1000	ABORT	System resources required to run this test are not available. The port may be busy with a valid call. Use the **display port PCSSpp** command to determine the station extension or trunk group/member number of the port. Use the **status bri-port PCSSpp** command to determine the service state of the port. If the service state indicates that the port is in use, then the port is unavailable for certain tests. Wait until the port is idle before retesting. 1. If the port status is idle, then retry the command at 1-minute intervals a maximum of 5 times.
1004	ABORT	The port has been seized by a user for a valid call. Use the **status bri-port** command to determine when the port is available for testing. 1. Retry the command at 1-minute intervals a maximum of 5 times. 2. If the test continues to abort and the port is not in use, escalate the problem.
1005	ABORT	This test is not valid for this type of translation. Ports administered as "ASAI" or "ADJK" can not run this test, because the B channels associated with the port are not used by ASAI or AT&T Adjunct Links. This is a normal condition.
2012	ABORT	Internal system error
2100	ABORT	Could not allocate the necessary resources to run this test. 1. Retry the command at 1-minute intervals a maximum of 5 times.

Continued on next page

Table 10-613. TEST #617 NPE Crosstalk Test — *Continued*

Error Code	Test Result	Description/Recommendation
1, 2	FAIL	The NPE of the tested port was found to be transmitting in error, causing noisy and unreliable connections. Error code 1 indicates that the NPE Crosstalk Test failed on Channel B1. Error code 2 indicates that the NPE Crosstalk Test failed on Channel B2. 1. Replace circuit pack.
	PASS	The port is correctly using its allocated time slots. 1. To be sure that this is not an intermittent problem, repeat this test a maximum of 10 times to ensure it continues to pass. 2. If complaints still exist, examine the connections and wiring.

BRI Port Local LAN Looparound Test (#618)

This test is destructive.

This test checks the connectivity of the BRI port across the LAN bus. Because this test is destructive, run this test only if the port is out-of-service.

Failures of this test indicate either on-board faults associated with the TBRI-PT hardware on the circuit pack or problems with the LAN Bus, which is used to form connectivity between the switch and the TBRI-PT.

If the port is in a state other than out-of-service, the BRI Port Local LAN Looparound Test will abort. If the port is out-of-service, then the port is put into a local looparound mode and the following test is executed.

A looparound test is performed across the Packet Bus for the D-Channel. The switch sends data over a packet connection, which is looped back by the BRI port (D-Channel) and received back by the switch. The test passes if the packet connection can be established and the transmitted data is received unaltered. The test aborts if the Packet Bus is alarmed in the Processor Port Network (or the port network in which that circuit pack resides) or if the Packet Interface board is out-of-service. The test fails due to either on-board faults associated with the BRI port hardware on the circuit pack or problems with the LAN bus.

Table 10-614. TEST #618 BRI Port Local LAN Loop Around

Error Code	Test Result	Description/Recommendation
1015	ABORT	The port is not out-of-service. 1. Use **status bri-port PCSSpp** to determine the status of the port. 2. If it is in use, wait until it is idle, and then use **busyout port PCSSpp** to place it in the out-of-service state and repeat this test. **CAUTION:** *Since the busyout command is destructive, execution of this command prior to the port being idle causes all calls associated with the BRI port to be torn down.*
1139	ABORT	The Packet Bus in the port network is out-of-service. 1. Follow the repair procedures for the Packet Bus. 2. Run **test port long PCSSpp** and verify the repair by viewing the results of the BRI Port Local LAN Looparound Test (#618).
1141	ABORT	The PKT-CTRL is out-of-service. 1. Follow the repair procedures for the PKT-CTRL. 2. Run **test port long PCSSpp** and verify the repair by viewing the results of the BRI Port Local LAN Looparound Test (#618).
1144	ABORT	The PPN Packet Bus is out-of-service. 1. Follow the repair procedures for the Packet Bus. 2. Run **test port long PCSSpp** and verify the repair by viewing the results of the BRI Port Local LAN Looparound Test (#618).

Continued on next page

Table 10-614. TEST #618 BRI Port Local LAN Loop Around — *Continued*

Error Code	Test Result	Description/Recommendation
2012 2100	ABORT	Internal system error Could not allocate the necessary system resources to run this test. 1. Retry the command at 1-minute intervals a maximum of 5 times.
	FAIL	The Looparound Test has failed. 1. If the test fails repeatedly, attempt to reset the circuit pack with **busyout board PCSS** and **reset board PCSS** if the other ports on the board are not in use. 2. If the test fails again, execute **test pkt P**. If this fails, follow failure procedures in the PKT-BUS section. 3. If the tests in Step 2 pass, the problem is local to the BRI board. Replace the trunk circuit pack.
	PASS	The BRI Port Local LAN Looparound Test passed.

BRI Port Local TDM Looparound Test (#619)

This test is conditionally destructive.

This test verifies the connectivity of a BRI port across the TDM Bus. It aborts if calls associated with the port are in progress. Failure of this test indicates an on-board fault associated with the port hardware on the circuit pack.

This Looparound Test runs the following individual tests on the two B-channels (B1 and B2) associated with the port.

- A Looparound Test across the TDM Bus for B1.
- A Conference Circuit Test for B1.
- A Looparound Test across the TDM Bus for B2.
- A Conference Circuit Test for B2.

The tests are run in the above order. If one fails, the remaining tests in the sequence are not executed, and maintenance software returns an error code.

Table 10-615. TEST #619 BRI Port Local TDM Loop Around

Error Code	Test Result	Description/Recommendation
1000	ABORT	The system resources required to run this test are not available. The port may be busy with a valid call. Use **display port PCSSpp** to determine the trunk group/member number of the port. Use **status bri-port PCSSpp** to determine the service state of the port. If the service state indicates that the port is in use, then the port is unavailable for certain tests. Wait until the port is idle before retesting. 1. If the port is idle, then retry the command at 1-minute intervals a maximum of 5 times.
1002	ABORT	The system could not allocate time slots for the test. The system may be under heavy traffic conditions or it may have time slots out-of-service due to TDM-BUS errors. Refer to TDM-BUS to diagnose any active TDM Bus errors. 1. If the system has no TDM-BUS errors and is not handling heavy traffic, repeat test at 1-minute intervals a maximum of 5 times.
1003	ABORT	The system could not allocate a tone receiver for the test. The system may be oversized for the number of Tone Detectors present or some Tone Detectors may be out-of-service. 1. Look for TTR-LEV errors in the Error Log and if present, refer to TTR-LEV. 2. Look for TONE-PT errors in the Error Log and if present, refer to TONE-PT. 3. If neither condition exists, retry the test at 1-minute intervals a maximum of 5 times.
1004	ABORT	The port has been seized by a user for a valid call. Use **status trunk** for the trunks associated with this port and determine when the port is available for testing. 1. Retry the command at 1-minute intervals a maximum of 5 times. 2. If the test continues to abort and the port is not in use, escalate the problem.
1005	ABORT	This test is not valid for this type of translation. Ports administered as **ASAI** or **ADJK** cannot run this test because the B channels associated with the port are not used by ASAI or AT&T Adjunct Links. This is a normal condition.

Continued on next page

Table 10-615. TEST #619 BRI Port Local TDM Loop Around — *Continued*

Error Code	Test Result	Description/Recommendation
2000	ABORT	Response to the test was not received from the BRI-LINE circuit pack within the allowable time period. 1. If this result occurs repeatedly, attempt to reset the circuit pack with **busyout board PCSS** and **reset board PCSS** if the other ports on the board are not in use. 2. If this result occurs again, replace the circuit pack.
2012	ABORT	Internal system error
2100	ABORT	Could not allocate the necessary resources to run this test. 1. Retry the command at 1-minute intervals a maximum of 5 times.
2103	ABORT	The system could not make the conference connection for the test. 1. Retry the command at 1-minute intervals a maximum of 5 times.
1, 2	FAIL	The TDM Looparound failed on one of the channels. ■ Error Code 1 — TDM Loop Around Test failed on B1. ■ Error Code 2 — TDM Loop Around Test failed on B2.
7, 8	FAIL	The Conference Circuit Tests failed on a B-channel. ■ Error Code 7 — test failed on B1 ■ Error Code 8 — test failed on B2. 1. If the test fails repeatedly, attempt to reset the circuit pack with **busyout board PCSS** and **reset board PCSS** if the other ports on the board are not in use. 2. If the test fails again, replace the circuit pack.
	PASS	The BRI Port Local TDM Loop Around Test passed.

CRC Error Counter Test (#623)

This test is non-destructive.

This test reads the BRI port's CRC error counters that are maintained on the BRI circuit pack. The Cyclic Redundancy Check (CRC) is a means of error detection used to determine the integrity of data frame contents. The CRC error counter is incremented by the circuit pack when it detects a CRC error. The test passes if the value of the counter is 0 (that is, the error is cleared). If the counter is non-zero, the test fails, and the value of the counter is displayed in the `Error Code` field.

Table 10-616. TEST #623 CRC Error Counter Test

Error Code	Test Result	Description/Recommendation
ANY	FAIL	This error occurs when a frame with a bad CRC is received over the D-Channel by the BRI board. This error is reported on a per-port basis when the counter goes over the threshold. This error is most likely due to a problem with the wiring or interference on the wiring caused by a noise source or no termination. It usually does not indicate a problem with the circuit pack.
	PASS	The CRC error counter was read correctly and has a value of 0.

Receive FIFO Overflow Error Counter Test (#625)

This test is non-destructive.

This test reads and clears the BRI port's Receive FIFO Overflow error counter maintained on the TBRI-BD circuit pack. This counter is incremented by the circuit pack when it detects an overflow of its receive buffers. The test passes if the value of the counter is 0 (that is, the error is cleared). If the counter is non-zero, the test fails, and the value of the counter is displayed in the Error Code field.

This error can occur if signaling frames are being received from the Packet Bus at a rate sufficient to overflow the receive buffers on the circuit pack for a port OR if a hardware fault is causing the receive buffers not to be emptied properly by the circuit pack. This test is useful for verifying the repair of the problem.

Table 10-617. TEST #625 Receive FIFO Overflow Error Counter Test

Error Code	Test Result	Description/Recommendation
2000	ABORT	Response to the test was not received from the circuit pack within the allowable time period. 1. If the test aborts repeatedly a maximum of 5 times, reset the circuit pack with the **busyout board PCSS** and **reset board PCSS** commands. 2. If the test aborts again, replace the circuit pack.
2012	ABORT	Internal system error
2100	ABORT	Could not allocate the necessary system resources to run this test. 1. Retry the command at 1-minute intervals a maximum of 5 times.
value	FAIL	The TBRI-BD circuit pack is still detecting errors of this type. The Error Code field contains the value of this counter. 1. Retry the command at 1-minute intervals a maximum of 5 times. 2. If the test continues to fail, run the Long Test Sequence and pay particular attention to the Looparound Tests (#618 and #619). See the repair procedures for the executed test if it fails. Otherwise, go to the next step. 3. Replace the circuit pack.
	PASS	The Receive FIFO Overflow error counter was read correctly and has a value of 0.

Level 1 Status Inquiry Test (#1242)

This test is non-destructive.

This test determines the state of the transmission facility of a BRI port at the Level 1 (L1) physical layer: Activated, Pending Activation, or Deactivated.

The Activated state is the correct state for an ISDN-BRI port. In this state the L1 interface can send and receive synchronized signals. This test passes if the state of L1 is Activated. This test also passes if software has taken this port out of service. See the description of the L1 “Deactivated State” below for more details.

The Pending Activation state indicates a problem with the channels, the wiring, or the TBRI-BD circuit pack. When in this state, the Level 1 interface is either not receiving any L1 framing from the channel, or it is communicating with the channel but cannot transition to the Activated state.

The Deactivated state indicates a problem with the TBRI-BD circuit pack. When in this state, the Level 1 interface is not active, and an idle signal is transmitted to the channels or that Layer 1 was deactivated by the switch. When an TBRI-PT port is placed in the out-of-service state, Level 1 is also put into the Deactivated state. This could be due either to the system detecting a fault with the port or to a **busyout port PCSSpp** request.

Table 10-618. TEST #1242 Level 1 Status Inquiry

Error Code	Test Result	Description/Recommendation
1187	ABORT	The board or port may be busied out. 1. Look in the Error Log for Error Type 18 (port busied out) for this port and TBRI-BD (board busied out). If this error type is present for TBRI-PT only, then release the port with the **release port PCSSpp** command and run the test again. If the error is present for both TBRI-BD and TBRI-PT, then release the board with the **release board PCSS** command and run the test again. **NOTE:** When you release a port, you release all ports associated with it. If certain ports still need to be busied out, use the **release port PCSSpp** command to busy them out. 2. Make sure the terminal is connected. 3. Retry the command at 1-minute intervals a maximum of 5 times.
2000	ABORT	Response to the test was not received from the circuit pack within the allowable time period. 1. If the test aborts repeatedly a maximum of 5 times, reset the circuit pack with the **busyout board PCSS** and **reset board PCSS** commands. 2. If the test aborts again, replace the circuit pack.
2012	ABORT	Internal system error
2100	ABORT	Could not allocate the necessary system resources to run this test. 1. Retry the command at 1-minute intervals a maximum of 5 times.

Continued on next page

Table 10-618. TEST #1242 Level 1 Status Inquiry — *Continued*

Error Code	Test Result	Description/Recommendation
1	FAIL	Received a status of Level 1 Pending Activation. U interface down indicating a problem with a connection between the switch and the NT1, a 2- to 4-wire converter that is used to connect 4-wire terminals to a 2-wire TN2198 or TN2185 circuit pack. 1. Verify that the connections between the switch and the NT1 are good. Verify that the NT1 has power. 2. Execute the **test port PCSSpp** command and review the results of the Level 1 Status Inquiry Test to verify the repair. If this test still fails, proceed to Step 3. 3. Follow the manufacturers repair procedures for the NT1. Then execute the **test port PCSSpp** command and review the results of the Level 1 Status Inquiry Test to verify repair.
2	FAIL	Received a status of Level 1 Pending Activation. U interface up, S/T interface down, which indicates a problem with the NT1 or the wiring between the NT1 and the BRI endpoint (S/T interface). 1. Execute the **test port PCSSpp** command and review the results of the Level 1 Status Inquiry test to verify the repair. If this test still fails, proceed to Step 2. 2. Follow the manufacturer-recommended repair procedures for the NT1. Then execute the **test port PCSSpp** command and review the results of the Level 1 Status Inquiry test to verify repair.

Continued on next page

Table 10-618. TEST #1242 Level 1 Status Inquiry — *Continued*

Error Code	Test Result	Description/Recommendation
3	FAIL	Received a status of Level 1 Deactivated; the port is out-of-service. 1. Issue the **status bri-port PCSSpp** command to verify that the service state of the port is out-of-service. If the service state of the port is not out-of-service, escalate the problem to the next tier. Otherwise, proceed to Step 2. 2. If the port has been placed out-of-service with the **busyout port PCSSpp** command, try releasing the port by executing the **release port PCSSpp** command. Then issue the **test port long PCSSpp** command and review the results of Level 1 Status Inquiry test. If this test still fails, proceed to Step 3. 3. After executing the **test port long PCSSpp** command, review the results of all the tests. Follow the repair procedures for any tests that fail. Verify repair of the problem by executing the **test port PCSSpp** command and by determining that the Level 1 Status test passes. If the test continues to fail for this reason, escalate the problem to the next tier.
4	FAIL	Received a status of Level 1 Pending Activation, the NT1 has a loss of power indicating a problem with the NT1. 1. Follow the manufacturer-recommended repair procedures for the NT1. 2. Execute the **test port PCSSpp** command and review the results of the Level 1 Status Inquiry test to verify the repair.
	PASS	This test indicates that Level 1 is activated or that software has taken the port out of service.

Layer 3 Query Test (#1243)

This test is nondestructive.

This test is used to check the application layer communications across the in-service ISDN D-Channel. The test passes if a status enquiry message is successfully sent, fails if the signaling link is down, and aborts if a query is already running or there is an internal error.

Table 10-619. TEST #1243 Layer 3 Query

Error Code	Test Result	Description/Recommendation
1019	ABORT	Test is already running.
1113	ABORT	The signaling link is down. 1. Use the **test port PCSSpp long** command to clear any errors which prevent establishment of the signaling link. 2. Examine the results of Test #626, which is executed with the command. If this test aborts or fails, follow the repair procedure for the Signaling Link Status Test. 3. Escalate problem if BRI Layer 3 Query Test continues to abort.
1139	ABORT	The Packet Bus in the port network is out-of-service. 1. Follow the repair procedures for the Packet Bus. 2. After completing Step 1, execute the **test port long PCSSpp** command and review the results of the BRI Port Local LAN Looparound Test to verify the repair.
1141	ABORT	The PKT-CTRL is out-of-service. 1. Consult the repair procedure for PKT-CTRL. 2. If Step 1 does not resolve the problem, escalate to the next tier.
1144	ABORT	The PPN Packet Bus is out-of-service. 1. Follow the repair procedures for the Packet Bus in the PPN. 2. After completing Step 1, execute the **test port long PCSSpp** command and review the results of the BRI Port Local LAN Looparound Test to verify the repair.

Continued on next page

Table 10-619. TEST #1243 Layer 3 Query — *Continued*

Error Code	Test Result	Description/Recommendation
1187	ABORT	The circuit pack or port may have been busied out by a technician. 1. Look in the Error Log for Error Type 18 (busied out) for TBRI-BD or TBRI-PT. a. If this error type is present for TBRI-PT, then release the port with the **release port PCSSpp** command and run the test again. b. If the error is present for both TBRI-BD and TBRI-PT, then release the circuit pack with the **release board PPCSS** command and run the test again. **NOTE:** When you release the circuit pack, you release all ports associated with it. If certain ports still need to be busied out, use the **release port PCSSpp** command to busy them out. 2. Make sure the terminal is connected. 3. Retry the command at 1-minute intervals a maximum of 5 times.
2012	ABORT	Internal system error
2100	ABORT	Could not allocate the necessary system resources to run this test. 1. Retry the command at 1-minute intervals a maximum of 5 times.
	PASS	The switch has successfully sent a Status Enquiry message.

Slip Query Test (#1244)

This test is nondestructive.

Slips occur when the transmitter and receiver are not running at precisely the same clock rate. The Slip Alarm Inquiry Test polls the total number of slips that have occurred on a link.

When the TN2185 circuit pack detects a slip condition, maintenance software initiates the Slip Alarm Inquiry Test to query the slip counters on the TN2185 circuit pack and total the slip counts in the maintenance software.

If the slip count is over the threshold, a Minor alarm is raised against the TN2185 circuit pack, leaving all ports of the TN2185 circuit pack in the in-service state. If the TN2185 circuit pack is used to supply the system synchronization source, the MINOR alarm will initiate a synchronization source switch. See TDM-BUS and SYNC for additional information.

Table 10-620. TEST #1244 Slip Alarm Inquiry Test

Error Code	Test Result	Description/Recommendation
	ABORT	Internal System Error
2000	ABORT	Response to the test request was not received within the allowable time period. If Error Type 1538 is present in the Error Log, follow the maintenance strategy recommended for this error type.
2100	ABORT	Could not allocate the necessary system resources to run this test. 1. Retry the command at 1-minute intervals for a maximum of 5 times.
1 to 88	FAIL	The circuit pack and the remote endpoint are not synchronized to the same clock rate, which has generated the Slip alarm. The error code equals the number of slips detected by the TN2185 circuit pack since the last Slip Alarm Inquiry Test. 1. Retry the command at 1-minute intervals a maximum of 5 times. 2. If the circuit pack is a TN2185, enter the **list measurement ds1-log PCSS** command to read the error seconds measurement. 3. Verify that both endpoints of the DS1 link are administered using the same signaling mode, framing mode, and line coding. 4. Check the physical connections of DS1 Interface circuit packs and cable. 5. Replace the local DS1 Interface circuit pack and repeat the test. 6. Contact T1 Network Service to diagnose the remote DS1 endpoint.
	PASS	No Slip alarm is detected on the DS1 Interface circuit pack.
0	NO BOARD	The DS1 Interface circuit pack is not administered. 1. Administer the DS1 Interface circuit pack by issuing the **add ds1 PCSS** command. 2. Run the test again.

TBRI-TRK (TN2185 ISDN Trunk-Side BRI)

MO Name (in Alarm Log)	Alarm Level	Initial Command to Run[1]	Full Name of MO
TBRI-TRK[2]	MAJOR[3]	test trunk PCSSpp l	MO_TBRI_TRK
TBRI-TRK	MINOR	test trunk PCSSpp l	MO_TBRI_TRK
TBRI-TRK	WARNING	test trunk PCSSpp sh	MO_TBRI_TRK

1 Where P is the port network number (1 for PPN, 2 or 3 for EPN), C is the carrier designation (A, B, C, D, or E), and SS is the carrier slot address where the circuit pack is located (1, 2, and so forth).

2 For additional repair information, also see TBRI-BD and TBRI-PT Maintenance Object documentation.

3 A MAJOR alarm on a trunk indicates that alarms on these trunks are not downgraded by the **set options** command and that at least 75 percent of the trunks in this trunk group are alarmed.

The TN2185 circuit pack contains eight, 4-wire ports that interface to the network at the ISDN S/T reference point over two 64 Kb/s channels (B1 and B2) and over a 16Kb/s signaling (D) channel. The B1 and B2 channels can be simultaneously circuit switched, or individually packet switched. Only one channel per trunk can be packet switched due to Packet Processing Element (PPE) limitations. The D channel is either circuit switched or packet switched. Packet switching uses the PPE to combine all D channels into a single physical channel, which is then routed via the concentration highway to the Network Control Element (NCE) and then to the TDM bus. The circuit-switched connections have a Mu-law or A-law option for voice and operate as 64Kb/s clear data channels. The packet-switched channels support the LAPD protocol and conform with the CCITT Q.920 Recommendations for D-channel signaling.

LEDs

The three LEDs on the circuit pack's faceplate indicate board status. When illuminated, the red LED indicates a board failure or a major or minor on-board alarm, the green LED indicates that testing is in progress, and the amber LED indicates that the board is in use.

System Technician-Demanded Tests: Descriptions and Error Codes

Always investigate tests in the order presented in the table below when inspecting errors in the system. By clearing error codes associated with the *Services State Test*, for example, you may also clear errors generated from other tests in the testing sequence.

Order of Investigation	Short Test Sequence	Long Test Sequence	D/ND[1]
Signaling Link State Check Test (#1251)	X	X	ND
Service State Audit Test (#256)	X	X	ND
Call State Audit Test (#257)	X	X	ND
ISDN Test Call Test (#258)		X	ND

1 Destructive; ND = Nondestructive

Signaling Link State (#1251)

This test is non-destructive.

This test checks the current state of the signaling link. The test looks at the board-level translations, checks that the board is physically inserted, gets the state of the D-Channel and service state of the port.

The test passes if the signaling link (D-Channel) is connected and operating normally. The test fails if the board is not installed, the signaling link is disconnected, or if the port is out of service. The test aborts otherwise.

Table 10-621. TEST #1251 Signaling Link State Test

Error Code	Test Result	Description/Recommendation
	ABORT	Internal system error
1018	ABORT	The test is disabled. 1. Enable the test by entering “enable test #1251”.
1114	ABORT	The signaling link is in a transitional state. 1. Retry the command at 1-minute intervals a maximum of 5 times.

Continued on next page

Table 10-621. TEST #1251 Signaling Link State Test — *Continued*

Error Code	Test Result	Description/Recommendation
8	FAIL	The signaling link is down. 1. Consult the procedures for the TBRI-PT maintenance object.
9	FAIL	The port is out of service. 1. Return the port to an in-service state.
	PASS	The signaling link is connected and operating normally.

Service State Audit (#256)

This test is non-destructive.

This test performs a service state audit on an ISDN B-Channel. The test passes if Call Processing informs Maintenance that the Restart message was transmitted successfully, or if the B-Channel was busy and could not send the message.

The test fails if the board is not inserted or translated properly, or if a reply is not received within a certain amount of time.

The test aborts if the signaling link is disconnected, if a message is already outstanding, or if the necessary resources could not be allocated.

To investigate the service state of the TN2185 ISDN Trunk-Side BRI Channel, issue the **status trunk trunk-group/trunk-member** command.

Table 10-622. TEST #256 Service State Audit Test

Error Code	Test Result	Description/Recommendation
1000	ABORT	System resources required to run this test are not available. The port may be on a valid call. Use **status trunk** to determine when trunk is available for testing. 1. Check the results of Test #1251 (Signaling Link State Check).
1018	ABORT	The test is disabled. 1. Enable maintenance by entering **y** in the `Maintenance Tests?` field on page 2 of the **change trunk-group** form.
1113	ABORT	The signaling link has failed, so the system cannot send any messages on behalf of this trunk. 1. Check the results of Test #1251 (Signaling Link State Test).
1114	ABORT	The signaling link is in a transitional state. 1. Retry the command at 1-minute intervals a maximum of 5 times.
1116	ABORT	The trunk is not in a service state which is appropriate for running the test. This test is only performed in the OOS/FE state.
1117	ABORT	A service state audit message is outstanding. 1. Wait two minutes and then try again.

Continued on next page

Table 10-622. TEST #256 Service State Audit Test — *Continued*

Error Code	Test Result	Description/Recommendation
2100	ABORT	Could not allocate the necessary system resources to run this test. 1. Retry the command at 1-minute intervals a maximum of 5 times.
	FAIL	Internal system error 1. Retry the command at 1-minute intervals a maximum of 5 times.
	PASS	Wait 4 minutes and then check the Error Log for any new errors of type 3073. If there are none, then both sides of the ISDN connection agree on the service state; the negotiation succeeded. If there is a new 3073 error, then the negotiation failed (the far-end switch twice failed to respond within 2 minutes). The switch automatically retries every 15 minutes. If the trunk was initially in-service, it is now placed in the maintenance/far-end state. Incoming calls are accepted, but no outgoing calls can be originated. If an incoming call is presented, another Service State Audit is immediately performed in an attempt to put the TN2185 ISDN Trunk-Side BRI Channel in the proper state.

Call State Audit Test (#257)

This test is nondestructive.

This test performs a call state audit on an ISDN B-Channel, and upon successful completion, guarantees that both sides of the interface are in a consistent call state for connections using the B-Channel. The test can be helpful when trying to clear a hung call. If the internal call state data to the near-end switch is different from that of the far-end switch, the call is torn down.

The test first verifies that the board is physically inserted, gets the current state from Call Processing, gets the country code, then runs the call state audit.The test passes if the audit is successful.

The test fails if the board is not inserted, if there is an internal system error, or if a reply was not received within the prescribed time.

The test aborts if the signaling link is disconnected, the request is already active, or if the B-Channel is in an Out-Of-Service state.

Table 10-623. TEST #257 Call State Audit Test

Error Code	Test Result	Description/Recommendation
1018	ABORT	The test is disabled. 1. Enable the test by entering **y** in the `Maintenance Tests?` field on page 2 of the **change trunk-group** form.
1019	ABORT	An audit is already in progress. 1. Wait two minutes and try again.
1113	ABORT	The signaling link has failed, so the system cannot send any messages on behalf of this trunk. 1. Check the results of Test #1251 (Signaling Link State Check).
1114	ABORT	The signaling link is in a transitional state. 1. Retry the command at 1-minute intervals a maximum of 5 times.
1116	ABORT	The trunk is in an out-of-service ISDN service state. 1. A call cannot be present if the trunk is in an ISDN out-of-service state, so a call state audit would be inappropriate. No action necessary. (Use the **status trunk** command.)
2100	ABORT	Could not allocate the necessary system resources to run this test. 1. Retry the command at 1-minute intervals a maximum of 5 times.
	FAIL	Internal system error 1. Retry the command at 1-minute intervals a maximum of 5 times.
	PASS	The audit passed successfully.

ISDN Test Call Test (#258)

This test performs a far-end loop around to a far-end switch over an ISDN trunk. The trunk's service state must be in-service, maint-NE, or out-of-service/NE, and no call can be active on the trunk.

A test call connection is established to a far-end switch over the ISDN trunk to be tested. The digital port on a TN711D Maintenance/Test circuit pack generates a test-pattern bit stream that is sent to the far-end switch and echoed back. The received pattern is then compared to the sent pattern and checked for errors that indicate a loss of integrity on the communications path.

If a test call is running when scheduled maintenance starts, the green LED is turned off. To determine if a test call is still running, use the **list isdn-testcall** and **status isdn-testcall** commands. A lit yellow LED on the Maintenance/Test circuit pack also indicates that a test call is running.

There are two methods available to place an outgoing ISDN Trunk-side BRI trunk test call:

1. The test call connection is established over the TDM Bus of the transmit and receive sides of the ISDN Trunk-side BRI trunk to a data channel. This method is selected when no Maintenance/Test circuit pack resides in the system.
2. The test call connection is established over the TDM Bus of the transmit and receive sides of the ISDN Trunk-side BRI trunk to a digital trunk testing port on the Maintenance/Test circuit pack. The Maintenance/Test Digital Port generates a pseudo bit stream.

A test is run periodically to check if the call is hung. If so, it gracefully tears down the call to release the resources.

Synchronous Commands

You can demand a synchronous outgoing test call by using the following maintenance commands:

- **test trunk trunk-group-no/member-no long [repeat number]**
- **test board PCsspp long [repeat number]**
- **test port port-location long [repeat number]**

Whenever a circuit translates to an ISDN Trunk-side BRI trunk during a Long Test Sequence, an outgoing test call is invoked, and the duration of the test call is 8.6 seconds. Once the test call completes, the bit error rate is retrieved from the Maintenance/Test Digital Port. A bit error rate greater than zero is reported as a failure to the Manager I terminal (MGRI). A failure indicates the need to run further diagnostics.

If no Maintenance/Test circuit pack exists, the outgoing ISDN Trunk-side BRI trunk test call is established over a high-speed data channel on the Network Control (NETCON) circuit pack (DATA-BD).

Asynchronous Commands

NOTE:
Only one trunk can be tested in a given port network, until the test call is canceled or completes.

Table 10-624. TEST #258 ISDN TEST Call

Error Code	Test Result	Description/Recommendation
4	ABORT	There is a problem with the Processor Interface Link. 1. Refer to the PI-LINK (Processor Interface Link) Maintenance documentation.
1004	ABORT	B channel in use. 1. Determine if a call is active on this ISDN Trunk-side BRI trunk via the **status trunk** command. 2. When the service state indicates in-service/idle, retry the test.
1005	ABORT	Bad Configuration (that is, no Maintenance/Test circuit pack) Issue the **test trunk <trunk Group/trunk member>** command and make sure there is a DATA-CHL (NETCON channel) administered.
1018	ABORT	Test call is disabled. 1. Enable Maintenance on the Trunk Group form.
1024	ABORT	(M/T-DIG) Maintenance/Test Digital Port in use. 1. Wait until yellow and green LEDs are turned off on the M/T-BD (Maintenance/Test circuit pack). 2. Retry the test. If problem persists, refer to M/T-DIG (Maintenance/Test Digital Port) documentation.
1113	ABORT	The signaling link has failed; the system cannot send any messages on behalf of this trunk. 1. Check the results of Test #1251 (Signaling Link State Check Test).
1114	ABORT	The signaling link is in a transitional state. 1. Retry the command at 1-minute intervals a maximum of 5 times.

Continued on next page

Table 10-624. TEST #258 ISDN TEST Call — *Continued*

Error Code	Test Result	Description/Recommendation
1116	ABORT	The switch could not appropriately change the ISDN service state. 1. Determine if a call is active on this ISDN Trunk-side BRI trunk (use the **status trunk** command). 2. If not, check the Error and Alarm Logs for problems with this TBRI-TRK MO.
1117	ABORT	ISDN B-channel maintenance message is already outstanding. 1. Wait two minutes, then try again.
1118	ABORT	Far-end of ISDN trunk is not administered. 1. Check the administration of the far-end ISDN trunk. 2. Issue the **status trunk** command and try the test again.
1119	ABORT	The test call was aborted due to a normal call attempt on this trunk. The test call is performed only if the trunk is idle. 1. Either wait for the normal call to terminate normally, or force it to be dropped by using the **busyout trunk** command**.**
1120	ABORT	The ISDN Trunk-side BRI trunk is in the ISDN out-of-service/far-end state. 1. Try to change the service state via Test #256 (Service State Audit Test). Then retry this test. **However, the trunk may be in the out-of-service/far-end state due to problems at the far-end switch. If that is the case, no remedial action can be taken at this end.**
1122	ABORT	There is no test line number for the far-end switch. 1. Check the Trunk Group Administration form.
1123	ABORT	There is no Feature Access Code administration for this Facility Test. 1. Check the Dial Plan and Feature Administration forms.
2012 None 2000	ABORT	Internal system error 1. Retry the command at 1-minute intervals a maximum of 5 times.
2035	ABORT	The call has timed out, perhaps because of a lack of system resources. 1. Wait 1 minute and try again.

Continued on next page

Table 10-624. TEST #258 ISDN TEST Call — *Continued*

Error Code	Test Result	Description/Recommendation
2036 2037	ABORT	Internal system error 1. Follow the recommendation for ABORT code 2012.
2038 2039	ABORT	A problem occurred while trying to read the test data. 1. Wait one minute and then try again. 2. If the test aborts again in the same manner, there is a serious internal problem. If so, escalate the problem.
2040	ABORT	Internal system error 1. Follow the recommendations for ABORT code 2012.
2041	ABORT	The call has timed out, perhaps because of a lack of system resources. 1. Follow the recommendations for ABORT code 2035.
2066	ABORT	Could not establish test call. 1. Retry the command at 1-minute intervals a maximum of 5 times.
2067	ABORT	The call has timed out, perhaps because of a lack of system resources. 1. Follow the recommendations for ABORT code 2035.
2074	ABORT	Bit and Block Error query failed. 1. Retry the command at 1-minute intervals a maximum of 5 times. 2. If the test continues to abort, there may be a serious internal problem with M/T-DIG (Maintenance/Test Digital Port). If this is the case, refer to the M/T-DIG (Maintenance/Test Digital Port) Maintenance documentation.
2075	ABORT	Internal system error 1. Follow the recommendations for ABORT code 2012.
2100	ABORT	Could not allocate the necessary system resources to run this test. 1. Retry the command at 1-minute intervals a maximum of 5 times.

Continued on next page

Table 10-624. TEST #258 ISDN TEST Call — *Continued*

Error Code	Test Result	Description/Recommendation
2104	ABORT	Call dropped or could not be originated. 1. Make sure service is provisioned by the network. 2. Check the administration of the far-end test line extension on the trunk group administration form. 3. Check the administration of the test call BCC (Bearer Capability Class) on the trunk group administration form. 4. Try the test again.
2201 2202 2203 2204 2205	ABORT	Internal system error 1. Follow the recommendations for ABORT code 2012.
2206	ABORT	Could not allocate the necessary system resources to run this test. 1. Follow the recommendations for ABORT code 2100.
2208	ABORT	Internal system error 1. Follow the recommendations for ABORT code 2012.
2209 2210	ABORT	Could not allocate the necessary system resources to run this test. 1. Follow the recommendations for ABORT code 2100.
2211	ABORT	Internal system error 1. Follow the recommendations for ABORT code 2012.
2212	ABORT	Call terminated by unexpected disconnect. 1. Wait one minute and then try again.
2213	ABORT	The call has timed-out, perhaps because of a lack of system resources. 1. Follow the recommendations for ABORT code 2035.
2214	ABORT	Call terminated by unexpected disconnect. 1. Wait one minute and then try again.
2215 2216 2217 2218 2219	ABORT	Internal system error 1. Follow recommendations for ABORT code 2012.

Continued on next page

Table 10-624. TEST #258 ISDN TEST Call — *Continued*

Error Code	Test Result	Description/Recommendation
2220	ABORT	Call terminated prematurely. 1. Wait one minute and try again.
2221 2222 2223 2224 2225 2226	ABORT	Internal system error 1. Follow recommendations for ABORT code 2012.
2227	ABORT	Could not allocate the necessary system resources to run this test. 1. Follow the recommendations for ABORT code 2100.
2042	FAIL	**This is the main purpose of the test.** The comparison of the data sent with the data received indicates a loss of integrity on the communications path. 1. The trunk should be taken out-of-service and the quality of the ISDN Trunk-side BRI line should be investigated. The investigation should include an in-depth analysis of the facility including the transmission facility and any external equipment such as DACs, CSUs, etc.
	PASS	The call worked. A test pattern was sent and received properly; the communications path is OK if the synchronous test call command was issued. An in-depth analysis of the ISDN Trunk-side BRI trunk facility including the transmission facility and any external equipment such as DACs, CSUs, and others should take place if the bit and block error rates are not acceptable.

TDMODULE (Trunk Data Module)

MO Name (in Alarm Log)	Alarm Level	Initial Command to Run	Full Name of MO
TDMODULE[1]	MINOR	test port PCSSpp l	Trunk Data Module
TDMODULE (a)	WARNING	test port PCSSpp l	Trunk Data Module

1 Where P is the port network number (1 for PPN and 2 or 3 for EPN); C is the carrier designation (for example, A, B, C, D, or E); SS is the address of the slot in the carrier where the circuit pack is located (for example, 01, 02, ...,etc.); and pp is the 2-digit port number (for example, 01).

The TDMODULE (Trunk Data Module) Maintenance documentation is covered in the PDMODULE (Processor Data Module) Maintenance documentation.

TDM-BUS (TDM Bus)

MO Name (in Alarm Log)	Alarm Level	Initial Command to Run	Full Name of MO
TDM-BUS	MAJOR	test tdm P	TDM Bus
TDM-BUS	MINOR	test tdm P	TDM Bus
TDM-BUS	WARNING	test tdm P	TDM Bus

The TDM Bus consists of a duplicated TDM Bus on each port network (PPN and EPN): TDM Bus A and TDM Bus B. Each TDM Bus consists of 256 time slots. The first five time slots on each bus are called the Control Channel. The Control Channel is active on only one bus at a time in each Port Network. The next 17 time slots are reserved for dedicated tones (that is, dial tone). These time slots are called the dedicated tone time slots and only one bus at a time carries the dedicated tones. The rest of the time slots on each bus are for general system use (that is, phone call).

On system initialization, the Control Channel is on TDM Bus A and the dedicated tones on TDM Bus B in each Port Network.

Systems with High or Critical Reliability have the ability to set the Control Channel and Tone Bus to a specific TDM Bus via the **set tdm PC** command, where **P** stands for the Port Network Number and **C** stands for the TDM Bus A or B (A for TDM Bus A or B for TDM Bus B). Throughout this document, PC is used to refer to a TDM Bus.

Terminology:

- Control Channel Bus - The TDM Bus control channel is on.
- Non-Control Channel Bus - The TDM Bus control channel is NOT on.
- Tone Bus - The TDM Bus dedicated tone time slots are on.
- Non-Tone Bus - The TDM Bus dedicated tone time slots are NOT on.

TDM Bus Fault Detection and Isolation Procedure

TDM Bus faults are most likely caused by a defective circuit pack connected to the backplane or bent pins on the backplane. It is possible that a circuit pack can cause a TDM Bus fault but still exhibit trouble-free operation. For example, the insertion of an MBUS (Memory Bus) only circuit pack can bend the TDM Bus pins on the backplane and short two leads together. The four circuit packs that may cause this problem are the TN770 Memory circuit pack, the TN777 80286 Processor circuit pack, the TN772 Duplication Interface circuit pack, and the TN777 Network Control circuit pack. The latter exists only on High and Critical Reliability systems. Since the TDM Bus is a shared resource, automatic identification of the cause of a TDM Bus fault is difficult. If a TDM Bus problem is

suspected, the system technician should run the **test tdm P** system technician command. If any of the resulting tests fail, then the system technician must manually perform a TDM Bus isolation procedure to identify the cause of the problem.

WARNING:
Since the TDM Bus fault isolation procedure involves removing circuit packs and possibly disconnecting entire carriers, the procedure is extremely destructive to the port network that contains the TDM Bus being tested. If possible, this procedure should be used after hours or during hours with minimum system use.

As circuit packs are removed or entire carriers are disconnected, any active calls terminating on those circuit packs or carriers are dropped. If the system technician has any hints about a particular circuit pack that may be causing the TDM Bus problem (for example, a new circuit pack was inserted into the Port Network just before the TDM Bus problem appeared), then those hints should be investigated before performing this procedure.

For this procedure, make sure at least one Tone Detector circuit pack is in the same Port Network in which the TDM Bus fault is being isolated. The Tone Detector circuit pack is needed by maintenance to test the TDM Bus.

Procedure 1

This procedure is an attempt to isolate the TDM Bus fault to circuit packs that are essential to the system operation. For each of the following circuit packs, perform Procedure 1.

Circuit Pack	Error Log Names
Tone-Clock	TONE-BD, TONE-PT, and TDM-CLK
Network Control	SW-CTL
Tone Detector	DETR-BD, GPTD-PT, and DTMR-PT
Processor Interface	PI-BD and PI-PT
Duplication Interface—only for systems with High or Critical Reliability	DUPINT
Expansion Interface	EXP-INTF

1. Display the Hardware Error and Alarm Logs for the circuit pack via the **display errors** and **display alarms** commands.
2. If there are errors for the circuit pack, refer to its Maintenance documentation and try to resolve the errors.
3. Whether or not all the errors can be cleared, test the TDM Bus again via the **test tdm P** command.
4. If some TDM Bus tests fail, continue with the next circuit pack.

5. If there are no more circuit packs in the list, go to Procedure 2.
6. If all the TDM Bus tests pass, the problem has been fixed.

Procedure 2

This procedure removes and re-inserts port circuit packs (purple slot); one or several at a time.

If all of the TDM Bus tests pass when the circuit pack is removed, but some of the tests fail when the circuit pack is inserted, the circuit pack is the cause of the problem and should be replaced. If some of the tests fail regardless of whether the circuit pack is inserted or removed, the circuit pack is not the cause of the problem (see Note). Repeat this procedure for each purple slot circuit pack in the Port Network.

NOTE:
Of course, in a multiple failure situation, the circuit pack may be one cause of the TDM Bus problem and there may be other failures that are causing TDM Bus faults. Also, the circuit pack itself may not be the cause of the problem, but the backplane pins may have been bent when the circuit pack was inserted.

1. Remove port circuit packs which have failed the NPE Crosstalk Test (#6) first. To find which circuit packs failed this test, display the Hardware Error Log via the **display errors** command. Refer to the Maintenance documentation of each port circuit pack that has port errors to check if any error indicates the failure of the NPE Crosstalk Test.
2. If no circuit pack failed the NPE Crosstalk Test (#6), remove one or several purple slot circuit packs.
3. Run the **test tdm P** command.
4. If any of the TDM Bus tests fail:
   - Check if the backplane pins in the removed circuit pack's slot appear to be bent.
   - If the backplane pins are bent, straighten or replace the pins, re-insert the circuit pack, and do this procedure again for the same circuit pack.
   - If the backplane pins are not bent, re-insert the circuit pack and do this procedure for the next set of circuit packs.

5. If none of the TDM Bus tests fail:
   - Re-insert the circuit pack.
   - Run the **test tdm** system technician command.
   - If any of the TDM Bus tests fail, the re-inserted circuit pack is faulty. Replace the circuit pack and do this procedure again for the new circuit pack.
   - If none of the TDM Bus tests fail, then the problem has been fixed.

Procedure 3

This procedure removes and re-inserts control carrier circuit packs one at a time. The Network Control circuit pack and the Processor Interface circuit pack are the only processor complex circuit packs that communicate on the TDM Bus, and thus are the only processor complex circuit packs likely to cause a TDM Bus problem in a stable system. This procedure should be performed for the Processor Interface circuit pack before it is attempted for any other processor complex circuit packs.

In a System Without High or Critical Reliability

To perform this procedure for the Network Control circuit pack, this circuit pack must be replaced. The system cannot operate without the Network Control circuit pack.

1. Power down the control carrier.
2. Remove the suspected circuit pack.
3. Check if the backplane pins in the removed circuit pack's slot appear to be bent.
4. If the backplane pins are bent:
   - Straighten or replace the pins.
   - Insert the same circuit pack.
   - Repeat from Step 2 with the same circuit pack.
5. If the backplane pins are not bent, insert or replace the circuit pack.
6. Turn the power back on to reboot the system.
7. Run the **test tdm P** command.
8. If any of the TDM Bus tests fail:
   - If the circuit pack in Step 5 was inserted, do this step again replacing the circuit pack.
   - If the circuit pack in Step 5 was replaced, do this step again with the next circuit pack.
9. If none of the TDM Bus tests fail, the problem has been fixed.
10. If this step fails to identify the cause of the problem, go to Procedure 4.

In a High or Critical Reliability System

A less destructive procedure for processor complex circuit packs can be used rather than the one described for standard systems. Perform the procedure on the Processor Interface circuit pack and Network Control circuit pack before it is attempted for any other processor complex circuit packs.

Pulling out processor complex circuit packs from the Standby SPE does not require powering down the carrier and does not require starting the system again. See Chapter 6, ‘‘Reliability Systems: A Maintenance Aid’’ for more details.

1. Perform Procedure 2 for the suspected processor complex circuit pack in the Standby SPE to determine if it is causing the TDM Bus problem. The **status system** command indicates which SPE is in standby mode. If the suspected circuit pack is the Tone-Clock circuit pack, make sure it is in standby mode via the **status system** command or its LED state. The SYSTEM CLOCKS and SYSTEM TONES fields of the status system form should read “standby” or the yellow LED on the circuit pack is off.

   NOTE:
   When doing Procedure 2 as a request of Procedure 3, pull out processor circuit packs instead of purple slot port circuit packs.

2. If it fails to identify the processor complex circuit pack as the cause of the problem, perform an SPE switch via the **reset system i** command (see Note).

   NOTE:
   Make sure that the current Standby SPE is in the standby mode via the **status system** command before performing the SPE switch.

3. Perform Procedure 2 for the suspected processor complex circuit pack in the new Standby SPE to determine if it is causing the TDM Bus problem.
4. If it fails again to identify the processor complex circuit pack as the cause of the problem, perform Procedure 2 for the remaining processor complex circuit packs.
5. If this procedure fails to identify the cause of the problem, go to Procedure 4.

Procedure 4

Procedure 4 attempts to isolate the failure to a particular set of carriers, and then checks only the circuit packs in those carriers. This procedure involves terminating the TDM Bus so that certain carriers are disconnected from the TDM Bus. This is done by moving the TDM Bus terminators (AHF1) on the carrier backplane. To terminate a TDM Bus at the end of a particular carrier, the TDM Bus cable that connects the carrier to the next carrier should be unplugged and replaced with the TDM Bus terminator. The TDM Bus terminators can be taken from one carrier to the other. To get to the TDM Bus cables, remove the back cover of the cabinet. When the length of the TDM Bus is modified via this procedure, the circuit packs that are essential to system operation and TDM Bus maintenance (for example, Network Control circuit pack, Tone-Clock circuit pack, Tone Detector circuit pack) must still be connected to the new *shortened* TDM Bus.

For the Processor Port Network (PPN)

1. Terminate the TDM Bus so that it extends within the active control carrier.
2. Run the **test tdm** system technician command. If any of the TDM Bus tests fail, perform Procedure 2 and/or Procedure 3 for only the circuit packs in those carriers connected to the *shortened* TDM Bus. Procedure 2 is performed for port circuit packs (purple slots) and Procedure 3 for control carrier circuit packs.
3. If none of the TDM Bus tests fail, extend the TDM Bus to another carrier and repeat this procedure. When a carrier is added that causes some of the TDM Bus tests to fail, perform Procedure 2 and/or Procedure 3 for only the circuit packs in that carrier.

For the Expansion Port Network (EPN)

1. Terminate the TDM Bus so that it only extends within the carrier containing the active Expansion Interface (EXP-INTF) circuit pack.
2. Run the **test tdm** system technician command. If any of the TDM Bus tests fail, perform Procedure 2 and/or Procedure 3 for only the circuit packs in those carriers connected to the shortened TDM Bus.
3. If none of the TDM Bus tests fail, extend the TDM Bus to another carrier and repeat this procedure. When a carrier is added that causes some of the TDM Bus tests to fail, perform Procedure 2 and/or Procedure 3 for only the circuit packs in that carrier.

If the above steps fail to identify a particular circuit pack or slot, the problem may be caused by a TDM Bus common component such as the termination resistors on the ends of the bus.

Restarting Nonfunctioning Port Circuit Packs

A defective TDM Bus Control Channel or system timing reference on one of the networks can result in port circuit packs (that is non-control carrier circuit packs) on this defective network entering the reset state. When this situation occurs, the circuit pack stops functioning and its red LED lights. The system does not detect the presence of a circuit pack when the circuit pack is in the reset state. Hence, executing the **list config board PCSS** command indicates that the circuit pack is not present.

If a circuit pack enters the reset state when the control channel is on TDM Bus PT (where network P contains the circuit pack), this circuit pack stops functioning until it receives a restart message when the control channel is on the same TDM Bus PT or when this circuit pack is powered up again.

To force the system to send a restart message to all circuit packs on a network, try one of the following methods depending on the circumstances:

NOTE:
A circuit pack functioning normally (that is, not in the reset state) ignores the restart message.

Procedure 1 (Nondestructive)

Execute the Idle Time Slot Test (#294) by issuing the command **test tdm P** when the control channel is on the same TDM Bus as it was when the circuit pack entered the reset state. If using this method is not feasible, try the other procedures in this section.

Procedure 2 (Non-Destructive)

if you are at the site: Reseat the circuit pack. This action causes the circuit pack that was in the reset state to begin functioning on the *current* Control Channel bus.

Procedure 2 (Nondestructive)

Execute the Idle Time Slot Test (#294) by issuing the command **test tdm P** when the control channel is on the same TDM Bus as it was when the circuit pack entered the reset state. If using this method is not feasible, try the other procedures in the section.

Procedure 3 (Destructive)

Reset the port network that contains the circuit pack that is in the reset state. When a network is reset, two restart messages, one on the control channel of each TDM Bus, are sent to each circuit pack on the network. Executing the **reset system L** command (where L=2, 3, 4, or 5) resets all networks in the system. *To reset an EPN only*, busyout all links to the EPN via the **busyout board PCSS** command and then release them via the **release board PCSS** command.

WARNING:
*The **reset system** command disrupts all calls in the system. Resetting the EPN only disrupts all calls going to and originating from the EPN.*

Procedure 4 (Destructive)

Execute the **recycle carrier PC** command where P is the Port Network Number of the network containing the circuit pack and C is the designation of the carrier containing the circuit pack.

WARNING:
This command removes power and returns power to the designated Medium cabinet port carrier. Thus, any other circuit packs on this carrier is also temporarily taken out-of-service.

Error Log Entries and Test to Clear Values

Table 10-625. TDM Bus Error Log Entries

Error Type	Aux Data	Associated Test	Alarm Level	On/ Off Board	Test to Clear Value
0[1]	0	Any	Any	Any	test tdm
1	0	Control Channel Test (#296)	MINOR	ON	test tdm P r 3
18 (a)	0	busyout tdm PC	WARNING	ON	release tdm PC
35 (b)	0-1	TDM Bus Corruption	MINOR	ON	set tdm PC
257 (c)	0	none	MAJOR	ON	
513 (d)	Any	Idle Time Slot Test (#294)	MINOR	ON	test tdm P r 3
769 (e)	Any	Idle Time Slot Test (#294)	WARNING	ON	test tdm P r 3
769 (f)	Any	Idle Time Slot Test (#294)			(see Notes)
1025	Any				
3872 (g)	Any	none			
3873 (g)	Any	none			
3874 (g)	Any	none			
3877 (g)	Any	none			

1 Run the Short Test Sequence first. If all tests pass, run the Long Test Sequence. Refer to the appropriate test description and follow the recommended procedures.

NOTE:
For TDM-BUS, an ON-BOARD alarm refers to a problem with the TDM-BUS itself.

Notes:

a. The TDM Bus has been busied out by the technician. The error retires when the technician releases the TDM Bus.

b. This error indicates the TDM Bus is corrupted. If the corruption was on the Control Channel bus and this system has High or Critical Reliability, TDM Bus maintenance automatically switches the control channel and/or tones to the other bus. The same strategy applies if the corruption was on the bus carrying the tones.

   An aux data value of 0 indicates the last reported TDM Bus corruption was on the Control channel bus.

An aux data value of 1 indicates the last reported TDM Bus corruption was on the Non-Control channel bus.

If this error is logged on both TDM Buses (A and B) on the PPN within two or three minutes, the red LED of several circuit packs may or may not be lit and there could be Switch Control errors. Under these circumstances do the following:

- Display the Hardware Error Log via the **display errors** command and look for SW-CTL (Switch Control) errors.
- If there are any errors logged against the Switch Control, try to resolve them.
- Test the TDM Bus via the **test tdm P** command.
- If all the TDM Bus tests pass, the problem has been fixed.
- If some of the TDM Bus tests fail, replace the Duplication Interface circuit pack in the A carrier (see Chapter 6, ‘‘Reliability Systems: A Maintenance Aid’’ for details). None of the Duplication Interface circuit pack tests detect this particular type of failure. Therefore, all its tests may still pass.
- Test the TDM Bus via the **test tdm P** command.
- If all the TDM Bus tests pass, the problem has been fixed.

c. This error indicates the TDM Bus was switched to the other bus due to TDM Bus corruption. The aux data value is not meaningful and no action is required.

d. This error indicates that some time slots are corrupted in the specified TDM Bus. The Minor alarm is raised when there are more than 50 bad time slots in the bus. The aux data indicates the number of bad time slots found by the test.

e. This error indicates that some time slots are corrupted in the specified TDM Bus. The Warning alarm is raised when there are more than 10 bad time slots but less than or up to 50 bad ones in the bus. The aux data value indicates the number of bad time slots found by the test.

f. This error indicates the idle time slot test found less than 10 bad time slots in the TDM Bus. The aux data value indicates the number of bad time slots found by the test. There is no alarm associated with this error.

g. These errors indicate communication problems. On a High or Critical Reliability system, TDM Bus maintenance may switch the Control Channel bus and/or Tone bus to the other bus. Test the TDM Bus via the **test tdm P** command and follow the procedures according to the error codes reported from the test.

   The aux data value shows the Angel ID number for which a downlink message was lost.

System Technician-Demanded Tests: Descriptions and Error Codes

Always investigate tests in the order presented in the table below when inspecting errors in the system. By clearing error codes associated with the *Control Channel Test*, for example, you may also clear errors generated from other tests in the testing sequence.

Order of Investigation	Short Test Sequence	Long Test Sequence	D/ND[1]
Control Channel Test on the Control			
Channel Bus (#296)	X	X	ND
Digit Detection Test on the Non-Control			
Channel Bus (#297)	X	X	ND
Idle Time Slot Test on TDM Bus A (#294)	X	X	ND

1 D = Destructive; ND = Nondestructive

Idle Time Slot Test on TDM Bus A or B (#294)

The Idle Time Slot Test detects noisy time slots on the bus and takes them out-of-service. The Tone Detector circuit pack is told to listen to idle time slots and if it detects any noise on a time slot, it returns a failure. At the end of the test, any out-of-service time slots are retested to see if they are still noisy and restored to service if they are idle. After all the time slots have been tested, maintenance counts the number of bad time slots and reports the number to the technician in the error code field. No more than 220 time slots are taken out-of-service on one bus, and no more than 300 are taken out-of-service on both buses at one time.

Table 10-626. TEST #294 or #295 Idle Time Slot Test on TDM Bus A or TDM Bus B

Error Code	Test Result	Description/Recommendation
none	ABORT	Could not allocate the necessary system resources to run this test. For example, maintenance could be running on the Tone Detector circuit pack and it is using the CPTRs.
1115	ABORT	Could not allocate the necessary system resources to run this test. 1. Retry the command at 1-minute intervals a maximum of 5 times.
number	FAIL	The error code indicates the number of bad time slots that were detected. The cause of this failure is most likely due to a bad port circuit pack and not the TDM Bus itself. 1. Execute the command again. 2. If the error persists, check the Error and Alarm Logs for alarms on port circuit packs from the NPE Crosstalk Test. 3. Refer to the appropriate circuit pack's documentation to clear the circuit pack's problem. 4. Test the TDM Bus again. If the error continues, refer to the ''TDM Bus Fault Detection and Isolation Procedure'' described earlier.
	PASS	The success of this test indicates all the idle time slots that are supposed to be idle are indeed idle. There is no noise on any of the idle time slots.

Control Channel Test (#296)

This test tests the integrity of the Control Channel bus. It ensures that communication through the TDM Bus is operational.

Table 10-627. TEST #296 Control Channel Test

Error Code	Test Result	Description/Recommendation
any code other than 1005	ABORT	Internal system error 1. Retry the command at 1-minute intervals a maximum of 5 times.
1005	ABORT	Since this test is valid only on the control channel bus, it aborts execution when run on the non-control channel bus. This is a valid response. Use the **status system** command to verify which bus is the control channel bus.
none	FAIL	Communication through the Control Channel is not working. The problem is not necessarily the TDM Bus itself. 1. Display the hardware error and alarm log for the Tone-Clock circuit pack. Refer to TONE-BD (Tone-Clock Circuit Pack) Maintenance documentation. 2. Resolve the errors for the Tone-Clock circuit pack. 3. Display the hardware error and alarm log for the Network Control circuit pack. Refer to DATA-BD (Network Control Circuit Pack) Maintenance documentation. 4. If this error is on the EPN, display the hardware error and alarm log for the Expansion Interface. Refer to EXP-INTF (Expansion Interface Circuit Pack) Maintenance documentation and resolve its errors. 5. Execute the **test tdm P** command again. 6. If the test still fails, refer to the "TDM Bus Fault Detection and Isolation Procedure" described earlier.
	PASS	Communication through the TDM Bus is operational.

Digit Detection Test (#297)

This test is executed on the Non-Control Channel bus. The Tone-Clock circuit pack is told to put a tone on the Non-Control Channel bus and the Tone Detector circuit pack is told to listen to it. The test passes if the tone is successfully transmitted on the Non-Control Channel bus.

Table 10-628. TEST #297 Digit Detection Test

Error Code	Test Result	Description/Recommendation
none, 1001 2100	ABORT	Could not allocate the necessary system resources to run this test.
1005	ABORT	Since this test is valid only on the non-control channel bus, it aborts execution when run on the control channel bus. This is a valid response. Use the **status system** command to verify which bus is the control channel bus.
2000	ABORT	Response to the test request was not received within the allowable time period. 1. Retry the command at 1-minute intervals a maximum of 5 times.
none	FAIL	This failure indicates that communication on the Non-Control Channel is not reliable. 1. Execute the command again. 2. If the problem persists, test the Tone-Clock circuit pack and Tone Detector circuit pack to make sure they are healthy. Refer to TONE-BD (Tone-Clock Circuit Pack), TONE-PT (Tone Generator), GPTD-PT (General Purpose Tone Detector Port), and DTMR-PT (Dual Tone Multifrequency Port). 3. Execute the command again. 4. If the problems persists, refer to the ''TDM Bus Fault Detection and Isolation Procedure'' described earlier.
	PASS	The non-control channel bus is operational.

System Technician-Demanded Tests: Descriptions and Error Codes

Use the **list configuration control** command to find the Tone-Clock circuit pack code of the system, and then proceed to look for the Short and Long Test Sequences according to the Tone-Clock circuit pack code.

Always investigate tests in the order presented in the following tables when inspecting errors in the system. By clearing error codes associated with the *SAKI Reset Test*, for example, you may also clear errors generated from other tests in the testing sequence.

For a system with a TN756 Tone-Clock Circuit Pack:

Order of Investigation	Short Test Sequence	Long Test Sequence	D/ND[1]
SAKI Reset Test (#53) (a)		X	D
Clock Health Test (#46) (b)	X	X	ND
Control Channel Loop Around Test (#52) (a)	X	X	ND
Tone Detection Verification Test (#42) (c)	X	X	ND
Tone Detector Audit/Update Test (#43) (c)	X	X	ND
Tone Generator Crosstalk Test (#90) (d)		X	ND
Tone Generator Transmission Test (#40) (d)	X	X	ND
Tone Generator Audit/Update Test (#41) (d)	X	X	ND

1 D = Destructive; ND = Nondestructive

Notes:

a. Refer to XXX-BD (Common Port Circuit Pack) Maintenance documentation for descriptions of these tests.

b. Refer to TONE-BD (Tone-Clock Circuit Pack) documentation for a description of this test.

c. Refer to Dual Tone Multifrequency Receiver Port (TTR) (DTMR-PT) or General Purpose Tone Detector Port (CPTR) (GPTD-PT) Maintenance documentation for descriptions of this test.

d. Refer to TONE-PT (Tone Generator) documentation for descriptions of these tests.

For a system with a TN768,TN780 or TN2182 Tone-Clock Circuit Pack:

Table 10-629. System Technician-Demanded Tests: TDM-BUS

Order of Investigation	Short Test Sequence	Long Test Sequence	D/ND[1]
SAKI Reset Test (#53) (a)		X	D
Clock Health Test (#46) (b)	X	X	ND
Control Channel Loop Around Test (#52) (a)	X	X	ND
Tone Generator Crosstalk Test (#90) (c)		X	ND
Tone Generator Transmission Test (#40) (c)	X	X	ND
Tone Generator Audit/Update Test (#41) (c)	X	X	ND
TDM Bus Clock Circuit Status Inquiry Test (#148)	X	X	ND
TDM Bus Clock Slip Inquiry Test (#149) (e)	X	X	ND
TDM Bus Clock PPM Inquiry Test (#150)	X	X	ND
TDM Clock Board Type (#574)		X	ND
TDM Bus Clock Parameter Update Test (#151)	X	X	ND
Standby Reference Health Check Test (#651) (d)		X	ND

1 D = Destructive, ND = Non-destructive

Notes:

a. Refer to XXX-BD (Common Port Circuit Pack) Maintenance documentation for descriptions of these tests.

b. Refer to TONE-BD (Tone-Clock Circuit Pack) documentation for a description of this test.

c. Refer to TONE-PT (Tone Generator) documentation for descriptions of these tests.

d. This test only runs on the Standby Tone-Clock circuit pack in a Port Network with more than one Tone-Clock circuit pack (High or Critical Reliability Option). The circuit pack must be a TN780 code with firmware revision 2 or above or be a TN2182.

e. Test #149 is not run on a TN2182.

TDM Bus Clock Slip Inquiry Test (#149)

This test evaluates the quality of the synchronization source for the Tone-Clock circuit pack. This test does not apply to the TN2182.

Table 10-630. TEST #149 TDM Bus Clock Slip Inquiry Test

Error Code	Test Result	Description/Recommendation
	ABORT	The system could not allocate the necessary resources for the test.
1001	ABORT	The system could not allocate the necessary resources for the test. 1. Wait 1 minute, and retry the test.
2000	ABORT	Response to the test request was not received within the allowable time period.
2100	ABORT	System resources required to run this test are not available. 1. Retry the command at 1-minute intervals a maximum of 5 times.
ANY	FAIL	This error represents the number of timing slips detected on the incoming synchronization source since the last slip inquiry was sent to the Tone-Clock circuit pack. The incoming synchronization source can be from one of three sources: (1) a DS1 Interface circuit pack, (2) an EXP-INTF circuit pack if the port network on which the test was executed does not contain the current system synchronization reference; (3) a local oscillator on an Active Tone-Clock circuit pack. The error code is a variable amount ranging from 1 to 255. 1. If there are errors against synchronization (SYNC), refer to the Synchronization Maintenance documentation to change the system synchronization reference. 2. If there are errors against DS1 Interface circuit pack (DS1-BD), refer to the DS1 Interface circuit pack Maintenance documentation to resolve the errors.

Continued on next page

Table 10-630. TEST #149 TDM Bus Clock Slip Inquiry Test — *Continued*

Error Code	Test Result	Description/Recommendation
ANY *(cont'd.)*	FAIL	3. If there are no SYNC or DS1-BD errors and a. this error was logged against the Tone-Clock circuit pack that was the current system synchronization reference at the time (use **status synchronization** to determine this), replace this Tone-Clock circuit pack. **NOTE:** Disruption may occur when executing the following procedures. b. the Tone-Clock circuit pack you are testing is in Active mode but does not contain the current system synchronization reference, switch the synchronization reference to the Tone-Clock circuit pack under test via **set synchronization PC** . Retry the command. If the error is still present, replace this Tone-Clock circuit pack. c. the Tone-Clock circuit pack under test is in Standby mode, make it active via **set tone-clock PC** and switch the synchronization reference to it. Reissue the command. If the error is still present, replace this Tone-Clock circuit pack.
	PASS	The Tone-Clock circuit pack does not detect any timing slips. This indicates that the external synchronization timing source is valid or that the system synchronization reference is a Tone-Clock circuit pack. The **status synchronization** command should be used to verify that the desired synchronization reference is providing timing for the system.

TDM Bus Clock PPM Inquiry Test (#150)

This test evaluates the quality of the synchronization source for the Tone-Clock circuit pack.

Table 10-631. TEST #150 TDM Bus Clock PPM Inquiry Test

Error Code	Test Result	Description/Recommendation
	ABORT	The system could not allocate the necessary resources for the test.
1001	ABORT	The system could not allocate the necessary resources for the test. 1. Wait 1 minute, and retry the test.
2000	ABORT	Response to the test request was not received within the allowable time period.
2100	ABORT	System resources required to run this test are not available. 1. Retry the command at 1-minute intervals a maximum of 5 times.
255	ABORT	The test was not executed because the Tone-Clock circuit pack was using its local oscillator rather than synchronizing to an external source. 1. Verify that this Tone-Clock circuit pack is expected to be the synchronization source. If not, correct the synchronization information and re-execute the test.
ANY	FAIL	This error represents the number of PPM errors detected on the external synchronization source since the last PPM inquiry was sent to the Tone-Clock circuit pack. A failure of this test indicates that we are outside of Stratum 4 or Stratum 3 timing specifications on the external timing source. This error produces an invalid timing signal for any system that uses this source for a synchronization reference. The error code is a variable amount ranging from 1 to 254. 1. If there are errors against SYNC (Synchronization), refer to SYNC (Synchronization) Maintenance documentation to change the system synchronization reference, OR 2. If there are errors against STRAT-3 (Stratum 3 Clock), refer to the STRAT-3 (Stratum 3 Clock) Maintenance documentation to resolve the errors, OR 3. If there are errors against DS1-BD (DS1 Interface circuit pack), refer to the DS1-BD (DS1 Interface Circuit Pack) Maintenance documentation to resolve the errors, OR

Continued on next page

Table 10-631. TEST #150 TDM Bus Clock PPM Inquiry Test — *Continued*

Error Code	Test Result	Description/Recommendation
ANY *(cont'd.)*	FAIL	4. If there are no other errors besides Error Type 1537 against TDM-CLK and if this error was logged against the Tone-Clock circuit pack that provided the current system synchronization reference (use **status synchronization** to determine this), replace the defective Tone-Clock circuit pack. **WARNING:** *Since service may be disrupted when the following procedures are carried out, try to perform the following steps when it is convenient for the customer.* 5. If the Tone-Clock circuit pack under test is in the Active mode but is not providing the current system synchronization reference, switch the synchronization reference to the Tone-Clock circuit pack under test using the **set synchronization PC** command. Rerun the test. If the test still fails, replace the defective Tone-Clock circuit pack. 6. If the Tone-Clock circuit pack under test is in the Standby mode place it in the Active mode via **set tone-clock PC**. Switch the synchronization reference to the Tone-Clock circuit pack under test using **set synchronization PC** . Rerun the test. If the test still fails, replace the defective Tone-Clock circuit pack.
	PASS	The Tone-Clock circuit pack does not detect timing any PPM errors. This indicates that the external synchronization timing source is valid or that the system synchronization reference is a Tone-Clock circuit pack. The **status synchronization** command should be used to verify that the desired synchronization reference is providing timing for the system.

TDM Bus Clock Parameter Update Test (#151)

This action updates the Tone-Clock internal circuit pack parameters. Tone-Clock circuit pack:

- Disable in-line duplication status messages.
- Disable in-line subrate frame maintenance messages (TN768, TN780 only).
- Set the PPM threshold at 60 PPM for TN768 and TN780. Set the PPM threshold at 85 PPM for TN2182.

- Enable PPM threshold switching
- Set the number of slips to trigger *loss of signal* - currently 30 per 5 millisecond period
- Enable the on-board synchronization switching algorithm (see above)
- Enable holdover operation (TN2182 only).

This is not a test and will always pass without identifying or reporting any Tone-Clock circuit pack errors.

Table 10-632. TEST #151 TDM Bus Clock Parameter Update Test

Error Code	Test Result	Description/Recommendation
	ABORT	Internal system error
	FAIL	Internal system error 1. Retry the command at 1-minute intervals a maximum of 5 times.
	PASS	The Tone-Clock circuit pack parameters have been successfully updated.

TDM-Clock Circuit Pack Type Test (#574)

The purpose of this query is to check if the required type of Tone-Clock circuit pack (TN780) is present when the Stratum 3 clock is administered.

Table 10-633. TEST #574 TDM Clock Circuit Pack Type Test

Error Code	Test Result	Description/Recommendation
	ABORT	The system could not allocate the necessary resources for the test. 1. Wait 1 minute and retry the test.
	FAIL	The Tone-Clock circuit pack in the system is not a TN780. The Stratum 3 clock requires a TN780 Tone-Clock circuit pack. 1. Replace the Tone-Clock circuit pack with a TN780. The old circuit pack may still be good, and need not be discarded.
	PASS	The required TN780 circuit pack is present.

Standby Reference Health Check Test (#651)

This test evaluates the quality of the external synchronization timing source for the Standby Tone-Clock circuit pack.

Table 10-634. TEST #651 Standby Reference Health Check Test

Error Code	Test Result	Description/Recommendation
	ABORT	This test may already be running due to a tone-clock installation, scheduled maintenance, alarm activity, or a technician-demand test from another terminal. This abort can also occur due to an internal system error. 1. Try the command again at 1-minute intervals up to 5 times.
1184	ABORT	This test requires an external synchronization source to be administered (DS1 primary, DS1 primary and secondary, or Stratum 3 Clock). 1. Administer the external synchronization source and retry the test.
2500	ABORT	Internal system error 1. Try the command again at 1-minute intervals up to 5 times.
0	FAIL	**If the Tone-Clock circuit pack is in the PPN**, the external synchronization timing source for side A of the Stratum 3 clock, or for the Primary DS1 reference is either absent or invalid. **If the Tone-Clock circuit pack is in an EPN**, the synchronization reference from the active EI circuit pack is either absent or invalid.
1	FAIL	**If the Tone-Clock circuit pack is in the PPN**, both external synchronization timing sources are either absent or invalid. **If the Tone-Clock circuit pack is in an EPN**, the synchronization references from both EI circuit packs are either absent or invalid. 1. Correct the synchronization source problem. Refer to the Synchronization (SYNC) maintenance section of this manual. 2. If the error still exists, replace the Tone-Clock circuit pack reported in the error log.
	PASS	The external synchronization timing source is valid.

TDM-CLK (TDM Bus Clock)

MO Name (in Alarm Log)	Alarm Level	Initial Command To Run[1]	Full Name of MO
TDM-CLK	MAJOR	test tone-clock UUC short	TDM Bus Clock
TDM-CLK	MINOR	test tone-clock UUC short	TDM Bus Clock
TDM-CLK	WARNING	release tone-clock UUC	TDM Bus Clock

1 UU is the universal cabinet number (1 for PPN, 2 -3 for EPNs). C is the carrier designation (A, B, C, D, or E).

NOTE:
Replacing the tone/clock circuit pack requires a special procedure described in the documentation for TONE-BD. That section also describes the LED displays for this board.

The Time Division Multiplex (TDM) Bus Clock resides on the Tone-Clock circuit pack, providing clocking signals both for the TDM Bus and the LAN Bus. The Tone-Clock circuit pack is a critical component in the system and is necessary to ensure the operation of all port circuit packs in the system. The TDM buses of the PPN and any EPNs are synchronized together. The system timing reference can be derived internally from the Tone-Clock circuit pack in any PN, or from an external (off-board) timing reference. Currently, the TDM Bus Clock supports synchronizing the TDM Bus with interface rates from Digital Signal 1 (DS1) facilities as primary or primary and secondary references, and from Stratum 3 Clock (STRAT-3) facilities. Only the TN780 tone-clock supports a Stratum 3 clock.

Moreover, the Tone-Clock circuit pack aids in monitoring and selecting synchronization references. The Tone-Clock circuit pack, after detecting that the external source of timing is not valid, will automatically begin its escalation procedure, according to the facilities administered.

NOTE:
Switching back to a DS1 source is handled by synchronization maintenance, once any problems with it have been corrected and tested. However, once synchronization has been switched to the internal timing source of the master Tone-Clock circuit pack, *switching back to a Stratum 3 Clock must be initiated by a technician* after the external reference has been repaired.

Tone-Clock Role	Synchronization Facilities	Initial External Synchronization Source	Backup External Synchronization Source	Internal Source
MASTER	Stratum 3 Clock	Source “A”	Source “B”	Local oscillator
	DS1 Primary and Secondary	DS1 Primary	DS1 Secondary	
	DS1 Primary Only	DS1 Primary	None	
	No External Source	None	None	
SLAVE	PNC Duplication	Active EI	Standby EI	
	No PNC Duplication	Active EI	None	

See ‘‘SYNC (Synchronization)’’ for more details of the escalation plan. *There exists a strong interdependency among the DS1 Interface circuit pack Maintenance, Synchronization Maintenance, and TDM Bus Clock Maintenance MOs*.

See the section on “TONE-BD” for a discussion of the relationship of Tone-Clock circuit packs with the various Reliability Options.

Error Log Entries and Test to Clear Values

Table 10-635. TDM Bus Clock Error Log Entries

Error Type	Aux Data	Associated Test	Alarm Level	On/Off Board[1]	Test to Clear Value
0[2]	0	Any	Any	Any	test tone-clock UUC sh r 1
1(a)	0	None	MINOR	OFF	
18(b)	0	busyout tone-clock UUC	WARNING	OFF	release tone-clock UUC
130(c)		None			
257(d)		None	WARNING	OFF	
513(e)	Any	Clock Circuit Status Inquiry (#148)	MINOR[3]	OFF	test tone-clock UUC
769(f)	Any	Clock Circuit Status Inquiry (#148)	MAJOR‡	ON	test tone-clock UUC sh r 10
1025(g)	Any	Clock Slip Inquiry(#149)			test tone-clock UUC sh
1281(h) 1282(h)	Any	None	MINOR	OFF	

Continued on next page

Table 10-635. TDM Bus Clock Error Log Entries — *Continued*

Error Type	Aux Data	Associated Test	Alarm Level	On/Off Board[1]	Test to Clear Value
1537	Any	Clock PPM Inquiry(#150)			test tone-clock UUC sh
2049(i)	Any	Standby Reference Health Check Test(#651)	MAJOR[3]	ON	test tone-clock UUC
2305(j)	0	None	WARNING	OFF	

1 As a general rule, any *on board* errors against the TDM Bus Clock should be resolved before pursuing any other errors against SPE or PNC components. *Off board* clock errors may be caused by other board errors, and should usually be addressed once any on board errors have been resolved.

2 Run the Short Test Sequence first. If all tests pass, run the Long Test Sequence. Refer to the appropriate test description and follow the recommended procedures.

3 Major or Minor alarms on this MO may have been downgraded to Warning alarms based on the values used in the **set options** command.

Notes:

a. The Tone-Clock circuit pack may have a clock at the edge of its specified frequency. This can cause Expansion Interface circuit packs and SNI circuit packs to go out-of-frame or report no-neighbor conditions. This can is turn cause EPNs, Expansion Archangel Links (EALs), Remote Neighbor Links (RNLs), and/or Local Neighbor Links LNLs) to go down. When this error is alarmed, Clock Health Inquiry Test (#46) will fail with an error code of 1.

   1. Replace the Tone-Clock circuit pack identified in the error log. See *How to Replace the Tone-Clock Circuit Pack* in the TONE-BD section.

b. The indicated Tone-Clock circuit pack has been made unavailable via the **busyout tone-clock UUC** command. It only applies to systems which have the High or Critical Reliability Option administered, because only a standby Tone-Clock circuit pack may be made busy by that command. To resolve this error, execute the **release tone-clock UUC** command for the alarmed circuit pack.

c. This error type indicates that the circuit pack has been removed or has been insane for more than 11 minutes. To clear the error, reinsert or replace the circuit pack.

d. The Tone-Clock circuit pack in the PPN is not a TN780 while a Stratum 3 synchronization is administered. Replace the Tone-Clock in the PPN with a TN780, or change synchronization administration to Stratum 4 if a Stratum 3 clock is not being used.

e. The tone-clock has reported an out-of-lock condition. A aux value of 1 indicates this error is an out-of-lock with the primary reference. A aux value of 2 indicates this error is an out-of-lock with the secondary reference. It could not lock onto the frequency of that synchronization reference. This will lead to a change in the synchronization reference if the condition continues.

f. The Tone-Clock circuit pack may be defective, however it may be a software failure that can be corrected by testing.

   1. Check to see if the board is duplicated (**list cabinet** and **status port-network**) on the affected port network.
   2. If the board is not duplicated, use test tone UUCSS long to resolve the errors. The long test resets the board and is required to reload on-board RAM associated with the TN2182's DSPs. The effect is that tone detectors are taken out of service momentarily and tones are removed from the TDM bus for about 10 seconds, meaning that no dial tone or touch tones are available during this interval. This will probably not affect calls in progress, but could cause a call origination to abort or a user not to get dial tone when going off hook.
   3. If all tests pass and the alarm does not resolve, retest with **test tone UUCSS long clear**.
   4. If the test passes, terminate the repair process. If the test fails, replace the circuit pack at the customer's convenience.
   5. If this error was logged against the standby Tone-Clock, and if the Aux Data value was 18369, SYNC (Synchronization) maintenance acts on this error. No corrective action is required. For any other Aux Data, go to the next step.
   6. If the board is duplicated, switch to the standby side (**set tone**).
   7. Test the alarmed board (test tone UUCSS long). This resets the board and is required to reload on-board RAM associated with the TN2182's DSPs.
   8. If all tests pass and the alarm does not resolve, retest (**test tone UUCSS long clear**).
   9. If the test passes, terminate the repair process. If the test fails, replace the circuit pack at the customer's convenience.

g. Tone-Clock circuit pack on-board maintenance has detected one or more *clock slips*, timing differences between its internal reference source and the synchronization signal provided by the master Tone-Clock. Although no clock slip errors are expected during normal operation, both manual and automatic interchanges of Tone-Clock circuit packs, synchronization references, and PNCs, may result in clock slip counts.

If error 1281 also is logged for the same Tone-Clock circuit pack, it is related to this problem, and should be corrected first. Otherwise, continue with the procedure below.

1. Use **test tone-clock UUC**, and examine the results of test #149 to see if slip errors are still occurring. If no new slip errors are reported, and if these errors are not causing a TDM-CLK alarm, they may be ignored. Use **test tone-clock UUC long clear** to clear the errors.
2. Otherwise, enter the **display errors** command, and follow corrective procedures for any other TDM-CLK, TONE-BD, SYNC, DS1C-BD, EXP-INTF, SNC-BD, and SNI-BD errors logged, except for those in the following table.

Error Log Entries for Slip Errors

Circuit Pack Name	Error Log Name	Error Log Entry for Slips
DS1 Interface	DS1-BD	3073 to 3160
Expansion Interface	EXP-INTF	2305
Switch Node Interface	SNI-BD	1537
Tone-Clock	TDM-CLK	1025
UDS1 Interface	UDS1-BD	3073 to 3160
DS1C Circuit Pack	DS1C-BD	3329

3. If 1025 errors persist, refer to SYNC Maintenance in this manual and follow the procedures in the “Approach to Troubleshooting” section.

h. Error Type 1281—This error is an indication that the Tone-Clock circuit pack has detected a loss of timing signal from the system synchronization reference. The Tone-Clock circuit pack has switched synchronization references.

1. Resolve any errors logged against the SYNC or STRAT-13 maintenance objects.
2. Refer to SYNC maintenance, in the “Approach to Troubleshooting” section, if the error is not resolved by step 1

Error Type 1282—Indicates that the TN2182 tone-clock was synchronized to a DS1 facility and that the reference frequency provided by the DS1 drifted beyond a range that could be tracked by the TN2182. Therefore the TN2182 is no longer synchronized to that DS1 reference. If a second DS1 is available, the tone-clock may be synchronized to that reference. If no secondary DS1 reference is available, the tone-clock will run off of its internal clock. This may result in slips being reported by the tone-clock and all DS1 facilities.

i. The tone-clock circuit pack in the master port network was unable to detect the incoming synchronization signal, but the other tone-clock was able to detect the references. If the aux data is 0, the problem is with the signal on the primary. If the aux data is 1, the problem is with the signal on the secondary. The system should switch clocks in this situation.

   1. If this error is against a PPN clock board and the system is using a Stratum 3 clock, check the cabling that brings the stratum 3 signal to this clock board.

   2. Replace the current standby Tone-Clock circuit pack. See *How to Replace the Tone-Clock Circuit Pack* in the TONE-BD section.

j. The indicated active Tone-Clock circuit pack, which is on a port network that does not contain the system synchronization reference (a **slave** Tone-Clock), has detected a loss of timing signal from its EXP-INTF synchronization source.

   1. Enter **display errors** and **display alarms**, and follow the associated repair procedures for EXP-INTF, TDM-CLK, and TONE-BD error log entries that have on-board alarms.

   2. If the 2305 errors persist, follow the repair procedures for EXP-INTF error log entries 257, 769, or 770, or any errors logged against SNI-BD, SNC-BD, or FIBER-LK.

   3. If the 2305 errors persist:

      a. *For Port Networks with more than one Tone-Clock circuit pack*, execute the command test synchronization r 10, and check to see if new 2305 errors against TDM-CLK were reported. If not, execute reset PNC interchange and then test synchronization r 10 again, and recheck for new 2305 errors against TDM-CLK

      b. *For Port Networks with a single Tone-Clock circuit pack*, execute the command test synchronization r 10, and check to see if new 2305 errors were reported.

      If no new instances of the 2305 errors were logged for either test, then enter **test tone-clock UUC long clear** to clear the TDM-CLK errors and the procedure is complete.

   4. For Port Networks with more than one Tone-Clock circuit pack, interchange Tone-Clocks with the **set tone-clock UUC**, then run **test synchronization r 10**, and check to see if new 2305 errors are reported against the new active Tone-Clock circuit pack. If not, replace the standby Tone-Clock circuit pack. See *How to Replace the Tone-Clock Circuit Pack* in the TONE-BD section. If this clears the error, the problem has been resolved.

   5. Replace the EI circuit pack for the active PNC. In the direct-connect case, use the **list fibers** command to identify which active EI connects with the PPN.

6. If the problem is still not cleared, and the Tone-Clock circuit pack reported in the error log has not been replaced up to now, replace it. See *How to Replace the Tone-Clock Circuit Pack* in the TONE-BD section.

System Technician-Demanded Tests: Descriptions and Error Codes

Always investigate tests in the order presented in the table below. By clearing error codes associated with the *SAKI Reset Test* for example, you may also clear errors generated from other tests in the testing sequence.

Order of Investigation	Short Test Sequence	Long Test Sequence	Reset Board Sequence	D/ ND[1]
SAKI Reset Test (#53) (a)		X		D
Clock Health Test (#46) (b)	X	X		ND
Control Channel Looparound Test (#52) (a)	X	X		ND
Tone Generator Crosstalk Test (#90) (c)		X		ND
Tone Generator Transmission Test (#40) (c)	X	X		ND
Tone Generator Audit/Update Test (#41) (c)	X	X		ND
TDM Bus Clock Circuit Status Inquiry Test (#148)	X	X		ND
TDM Bus Clock Slip Inquiry Test (#149)(e)	X	X		ND
TDM Bus Clock PPM Inquiry Test (#150)	X	X		ND
TDM Bus Clock Parameter Update Test (#151)	X	X		ND
Board Type Check Test (#574)	X	X		ND
Standby Reference Health Check Test (#651) (d)		X		ND

1 D = Destructive; ND = Nondestructive

Notes:

a. Refer to “XXX-BD” for descriptions of these tests.

b. Refer to “TONE-BD” for a description of this test.

c. Refer to “TONE-PT” for descriptions of these tests.

d. This test only runs on the Standby Tone-Clock circuit pack in a Port Network with more than one Tone-Clock circuit pack (High or Critical Reliability Option). The circuit pack must be a TN780 code with firmware revision 2 or above, or be a TN2182.

e. Test #149 is not run on the TN2182.

TDM Bus Clock Circuit Status Inquiry Test (#148)

The TDM Bus Clock circuitry is checked for sanity. Any problems that are found are reported via error codes

Table 10-636. TEST #148 TDM Bus Clock Circuit Status Inquiry Test

Error Code	Test Result	Description/Recommendation
None 1001	ABORT	The system could not allocate the necessary resources for the test. 1. Wait 1 minute, and retry the test.
2000	ABORT	Response to the test request was not received within the allowable time period.
2100	ABORT	System resources required to run this test are not available. 1. Retry the command at 1-minute intervals a maximum of 5 times.
1	FAIL	This error means the Tone-Clock circuit pack framing verification firmware reports an error in the clock synchronization signal coming into this Port Network. 1. If the Tone-Clock circuit pack reporting the problem is a master clock, then the system synchronization reference is providing a bad timing source. Refer to SYNC (Synchronization) or STRAT-3 (Stratum 3 Clock) Maintenance documentation to change the system synchronization reference. 2. If the Tone-Clock circuit pack is a slave clock, then the EI to which it is listening is providing a bad timing source. Follow the diagnostic procedures specified for TDM-CLK Error Code 2305. 3. If no problem can be found with the incoming synchronization signal, replace the Tone-Clock circuit pack. See *How to Replace the Tone-Clock Circuit Pack* in the TONE-BD section.
2	FAIL	This error indicates that Tone-Clock circuit pack has inaccurately detected loss of signal on the incoming synchronization timing source.

Continued on next page

Table 10-636. TEST #148 TDM Bus Clock Circuit Status Inquiry Test — *Continued*

Error Code	Test Result	Description/Recommendation
4 or 8	FAIL	The local oscillator on the Tone-Clock circuit pack has failed.
16 or 32	FAIL	The circuitry on the Tone-Clock circuit pack used to detect synchronization timing errors has failed. 1. Errors 2, 4, 8, 16, and 32 indicate that there is poor synchronization between port networks and external facilities. It may be noticeable to the customer in the form of errors in data communications. The Tone-Clock circuit pack is defective. See *How to Replace the Tone-Clock Circuit Pack* in the TONE-BD section.
64	FAIL	This message is only sent when an uplink message has reported the loss of valid synchronization timing information coming into this Port Network. It has been reported in TDM-CLK Error Log entries; one or more of 1025, 1281, 1537, 2049 and 2305. 1. Resolve the errors indicated. No separate corrective action is required.
65	FAIL	The tone-clock is currently not able to lock on to the current synchronization reference. If this tone-clock is in the master port networK: 1. Examine the error log for any DS1-BD, SYNC or other TDM-CLK errors and resolve as applicable. 2. Run this test again via the test tone-clock UUC command. 3. Examine the DS1 measurements to determine if the facility is healthy. 4. Administer a new synchronization reference. 5. Replace the DS1 board currently supplying the reference. If this tone-clock is in the slave port networK: 1. Examine the error log for any SYNC, EXP-INTF or other TDM-CLK errors. 2. Run this test again via the test tone-clock UUC command.

Continued on next page

Table 10-636. TEST #148 TDM Bus Clock Circuit Status Inquiry Test — *Continued*

Error Code	Test Result	Description/Recommendation
66	FAIL	There is an on-board failure of TDM clock hardware. 1. Use **test tone UUCSS long** to resolve the problem. The long test resets the board and is required to reload on-board RAM associated with the TN2182"s DSPs. The effect is that tone detectors are taken out of service momentarily and tones are removed from the TDM bus for about 10 seconds. This means that no dial tone or touch tones are available during this interval. It probably will not affect calls in progress, but could cause a call origination to abort or a user will not get dial tone when going off hook. 2. If the test passes and the alarm does not resolve, retest (**test tone UUCSS long clear**). 3. If the test passes, terminate the repair process. If it fails, replace the circuit pack at the customer's convenience.
	PASS	TDM Bus Clock Circuit Status is sane. There are no clock-detection circuit problems on the Tone-Clock circuit pack.

TDM Bus Clock Slip Inquiry Test (#149)

This test evaluates the quality of the synchronization source for the Tone-Clock circuit pack.

NOTE:
This test does not apply to the TN2182

Table 10-637. TEST #149 TDM Bus Clock Slip Inquiry Test

Error Code	Test Result	Description/Recommendation
	ABORT	The system could not allocate the necessary resources for the test.
1001	ABORT	The system could not allocate the necessary resources for the test. 1. Wait 1 minute, and retry the test.

Continued on next page

Table 10-637. TEST #149 TDM Bus Clock Slip Inquiry Test — *Continued*

Error Code	Test Result	Description/Recommendation
2000	ABORT	Response to the test request was not received within the allowable time period.
2100	ABORT	System resources required to run this test are not available. 1. Retry the command at 1-minute intervals a maximum of 5 times.
Any	FAIL	The error code represents the number of timing slips detected on the incoming synchronization source since the last slip inquiry was sent to the Tone-Clock circuit pack. The incoming synchronization signal can be from one of four sources: 1. A Stratum 3 Clock, if that option is administered and the circuit pack tested was the active Tone-Clock in the PPN. 2. A DS1 Interface circuit pack, if DS1 Synchronization is administered, and associated with the circuit pack tested. 3. The local oscillator on the master Tone-Clock circuit pack, if it is providing the system clocking signals. 4. An EXP-INTF circuit pack, if the port network on which the test was executed does not contain the current system synchronization reference. The error code is a variable amount ranging from 1 to 255. 1. Small numbers of slips should not result in service degradation. If the error code is small (1 or 2), rerun the test. If the error only occurs infrequently, it may be ignored. 2. Otherwise, refer to the “Approach to Troubleshooting” section in the Synchronization (SYNC) Maintenance section of this manual.
	PASS	The Tone-Clock circuit pack does not detect any timing slips. This indicates that the incoming synchronization timing source is valid or that the system synchronization reference is a Tone-Clock circuit pack. The **status synchronization** command should be used to verify that the desired synchronization reference is providing timing for the system.

TDM Bus Clock PPM Inquiry Test (#150)

This test evaluates the quality of the synchronization source for the Tone-Clock circuit pack.

Table 10-638. TEST #150 TDM Bus Clock PPM Inquiry Test

Error Code	Test Result	Description/Recommendation
	ABORT	The system could not allocate the necessary resources for the test.
1001	ABORT	The system could not allocate the necessary resources for the test. 1. Wait 1 minute, and retry the test.
255	ABORT	The Tone-Clock circuit pack was using its local oscillator rather than synchronizing to an external source. 1. Verify that this Tone-Clock circuit pack is expected to be the synchronization source. If not, correct the synchronization information and re-execute the test.
2000	ABORT	Response to the test request was not received within the allowable time period.
2100	ABORT	System resources required to run this test are not available. 1. Retry the command at 1-minute intervals a maximum of 5 times.
Any	FAIL	The error code represents the rate (in Parts Per Million, or PPM) at which clock slip errors have been detected on the incoming synchronization source since the last PPM inquiry was sent to the Tone-Clock circuit pack. A failure of this test indicates that we are outside of Stratum 4 or Stratum 3 timing specifications on the incoming timing source. The error code is a variable amount ranging from 1 to 254. 1. If error 1537 is entered in the hardware error log against TDM-CLK, then the board has switched timing sources. Follow the procedures associated with hardware log error code 1537. 2. Otherwise, refer to “Approach to Troubleshooting” in the Synchronization (SYNC) Maintenance section of this manual.
	PASS	The Tone-Clock circuit pack does not detect timing any PPM errors. This indicates that the external synchronization timing source is valid or that the system synchronization reference is a Tone-Clock circuit pack. The **status synchronization** command should be used to verify that the desired synchronization reference is providing timing for the system.

TDM Bus Clock Parameter Update Test (#151)

This test updates the following internal parameters on the Tone-Clock circuit pack:

- Disable in-line duplication status messages.
- Disable in-line subrate frame maintenance messages (TN768, TN780 only).
- Set the PPM threshold at 60 PPM for TN768 and TN780. Set the PPM threshold at 85 PPM for TN2182.
- Enable PPM threshold switching
- Set the number of slips to trigger *loss of signal* - currently 30 per 5 millisecond period
- Enable the on-board synchronization switching algorithm (see above)
- Enable holdover operation (TN2182 only).

This is not a test and will always pass without identifying or reporting any Tone-Clock circuit pack errors

Table 10-639. TEST #151 TDM Bus Clock Parameter Update Test

Error Code	Test Result	Description/Recommendation
	ABORT	Internal System Error
	FAIL	Internal System Error 1. Retry the command at 1-minute intervals a maximum of 5 times.
	PASS	The Tone-Clock circuit pack parameters have been successfully updated.

Board Type Check Test (#574)

This test verifies that a Tone-Clock circuit pack administered with a Stratum 3 Clock source has code TN780.

Table 10-640. TEST #574 Board Type Check Test

Error Code	Test Result	Description/Recommendation
2012	ABORT	Internal System Error 1. Retry the command at 1-minute intervals a maximum of 5 times.
ANY	FAIL	Stratum 3 Clock Synchronization is administered for the carrier in which this Tone-Clock circuit pack resides, but the Tone-Clock does not have code TN780. 1. If the Stratum 3 Clock option is incorrectly administered, remove it. 2. Otherwise, replace the circuit pack. See *How to Replace the Tone-Clock Circuit Pack* in the TONE-BD section.
	PASS	The proper (TN780) Tone-Clock circuit pack code is present for Stratum 3 Clock synchronization.

Standby Reference Health Check Test (#651)

This test evaluates the quality of the external synchronization timing source for a standby Tone-Clock circuit pack. All administered synchronization timing sources must be valid for this test to pass. If the tone-clock circuit pack and the synchronization timing sources are in different port networks, the EI circuit packs transport the timing sources to the tone-clock.

Table 10-641. TEST #651 Standby Reference Health Check Test

Error Code	Test Result	Description/Recommendation
	ABORT	This test may already be running due to a tone-clock installation, scheduled maintenance, alarm activity, or a technician-demand test from another terminal. This abort can also occur due to an internal system error. 1. Try the command again at 1-minute intervals up to 5 times.
1184	ABORT	This test requires an external synchronization source to be administered (DS1 primary, DS1 primary and secondary, or Stratum 3 Clock). 1. Administer the external synchronization source and retry the test.
2500	ABORT	Internal System Error 1. Try the command again at 1-minute intervals up to 5 times.
0	FAIL	The external synchronization timing source for side A of the Stratum 3 clock, or for the primary DS1 reference is either absent or invalid. The external synchronization timing source for side B of the Stratum 3 clock, or for the secondary DS1 reference is not yet tested.
1	FAIL	The external synchronization timing source for side B of the Stratum 3 clock, or for the secondary DS1 reference is either absent or invalid. 1. Correct the synchronization source problem. Refer to the Synchronization (SYNC) maintenance section of this manual. 2. If the error still exists, replace the Tone-Clock circuit pack reported in the error log. See *How to Replace the Tone-Clock Circuit Pack* in the TONE-BD section.
	PASS	The external synchronization timing source is valid.

TIE-BD (Tie Trunk Circuit Pack)

MO Name (in Alarm Log)	Alarm Level	Initial Command to Run[1]	Full Name of MO
TIE-BD	MIN	test board PCSS sh	Tie Trunk Circuit Pack
TIE-BD	WRN	test board PCSS sh	Tie Trunk Circuit Pack

1 Where P is the port network number (1 for PPN and 2 or 3 for EPN); C is the carrier designation (for example, A, B, C, D, or E); and SS is the address of the slot in the carrier where the circuit pack is located (for example, 01, 02, ..., etc.).

Refer to XXX-BD (Common Port Circuit Pack) Maintenance documentation for circuit pack level errors. See also TIE-TRK (Tie Trunk).

TIE-DS1 (DS1 Tie Trunk)

MO Name (in Alarm Log)	Alarm Level	Initial Command to Run	Full Name of MO
TIE-DS1[1]	MAJOR[2]	test trunk <grp/mbr> l	DS1 Tie Trunk
TIE-DS1	MINOR	test trunk <grp/mbr> l	DS1 Tie Trunk
TIE-DS1	WARNING	test trunk <grp/mbr>	DS1 Tie Trunk

1 For additional repair information, see also DS1-BD (DS1 Interface Circuit Pack) Maintenance documentation.

2 A MAJOR alarm on a trunk indicates that alarms on these trunks are not downgraded by the **set options** command and that at least 75 percent of the trunks in this trunk group are alarmed.

The DS1 tie trunk provides both voice and data inter-PBX communication. A 24 channel DS1 Interface circuit pack can support up to 24 digital tie trunks through a 1.544 Mbps DS1 link. A 32 channel DS1 Interface circuit pack can support up to 30 digital tie trunks through a 2.048 Mbps DS1 link. DS1 Interface circuit packs are described in DS1-BD. DS1 Tie Trunks are used widely in the DCS and Central Attendant Service (CAS) features of the system.

A DS1 tie trunk can also be used as an access endpoint which is a non-signaling channel with a bandwidth of voice-grade-data, 56K-data or 64K-data.

DS1 tie trunk maintenance provides a strategy to maintain a DS1 tie trunk via a port on the DS1 Interface circuit pack. The maintenance strategy covers logging DS1 tie trunk hardware errors, running tests for trunk initialization, periodic and scheduled maintenance, system technician-demanded tests, and alarm escalation and resolution. Three different trunk service states are specified in the DS1 tie trunk maintenance. They are: *out-of-service* in which the trunk is in a deactivated state and cannot be used for either incoming or outgoing calls; *in-service* in which the trunk is in an activated state and can be used for both incoming and outgoing calls; *disconnect* (ready-for-service) in which the trunk is in an activated state but can only be used for an incoming call. If the DS1 Interface circuit pack is out-of-service, all trunks on the DS1 Interface circuit pack are placed into out-of-service state, and a Warning alarm is raised.

Hardware Error Log Entries and Test to Clear Values

DS1 Tie Trunk Maintenance Error Log Entries

Error Type	Aux Data	Associated Test	Alarm Level	On/Off Board	Test to Clear Value
0[1]	0	Any	Any	Any	test trunk <grp>/<mbr> sh r 1>
1 (a)	57476 57477 57485 57487				
15 (b)	Any	Port Audit and Update Test (#36)			
18 (c)	0	busyout trunk <grp>/<mbr>	WARNING	OFF	release trunk <grp>/<mbr>
19(d)	0	None			
130 (e)		None	WARNING	ON	test trunk <grp>/<mbr>
257 (f)	57473 57474				
513(g)	57392	DS1 Tie Trunk Seizure Test (#136)	MIN/MAJ[2]		
769(h)	57393	DS1 Tie Trunk Seizure Test (#136)	MIN/MAJ[2]		
1025		DS1 Tie Trunk Seizure (Test #136)	MAJ/MIN/ WRN[3]	OFF	test trunk <grp>/<mbr> r 2
1281		Conference Circuit (Test #7)	MAJ/MIN/ WRN[3]	ON	test trunk <grp>/<mbr> l r 4
1537		NPE Crosstalk Test (#6)	MAJ/MIN/ WRN[3]	ON	test trunk <grp>/<mbr> l r 3
1793 (i)					test board PCSS long
2305(j)	50944	DS1 Tie Trunk Seizure Test (#136)	MIN/MAJ[3]	OFF	

Continued on next page

DS1 Tie Trunk Maintenance Error Log Entries

2562(k)	16665				
2817(l)	52992				
3840 (m)	Any	Port Audit and Update (Test #36)			

1 Run the Short Test Sequence first. If all tests pass, run the Long Test Sequence. Refer to the appropriate test description and follow the recommended procedures.

2 This alarm will only be raised when the System-Parameter Country form has the Base Tone Generator field set to 4 (Italy). This alarm will be a MINOR alarm unless 75% or more trunks in this trunk group are out of service, then the alarm will be upgraded to a MAJOR alarm.

3 Minor alarms on this MO may be downgraded to Warning alarms based on the values used in the **set options** command. If the MINOR alarm is not downgraded by the **set options** values, the MINOR alarm is upgraded to a MAJOR alarm if 75 percent of the trunks in this trunk group are alarmed.

Notes:

a. Error Type 1—The DS1 Interface circuit pack detects a hardware error on the DS1 tie trunk. This error can be caused by incompatible translations. Make sure the parameters administered on the DS1 circuit pack form match those administered on the far-end switch.

   The Aux Data field indicates the following hardware error types:

57476	On-hook before wink
57477	On-hook before ready to receive digits
57485	Wink too short for valid signal
57487	The timer expired while waiting for an off-hook signal from the far end as a response at end of digits dialing. Check the far-end switch for related problems.

   If all administration errors between the switch and the far-end match, and these errors continue to recur, follow normal escalation procedures.

b. Error Type 15—This is a software audit error that does not indicate any hardware malfunction. Run Short Test Sequence and investigate associated errors (if any).

c. Error Type 18—The DS1 tie trunk has been busied out by a **busyout trunk** grp/mbr command. No calls can be made on this trunk except for the Facility Access Test Call.

d. Error Type 19—This type of error indicates that the far-end may be out-of-service, or the Electronic Tandem Network may be busied out.

e. Error Type 130—This error type indicates that the circuit pack has been removed or has been insane for more than 11 minutes. To clear the error, reinsert or replace the circuit pack.

f. Error Type 257—The DS1 Interface circuit pack detects a hardware error on the DS1 tie trunk. The trunk cannot communicate with the far end because it is unable to interpret digits sent from the far-end switch. The Aux Data field indicates the following:

57473	The rotary dial rate is below 8 pulses per second.
57474	The rotary dial rate is above 12 pulses per second.

Check with the far-end switch or operating company for proper trunk connection.

g. Error Type 513—DS1 Interface circuit pack detects a hardware error on the DS1 tie trunk. The trunk is in-service/active and waiting for an “on-hook” from the far-end switch. No calls can be routed over the trunk while it is in this state. Aux Data 57392 indicates no external release on PBX disconnect. Check with the far-end switch or operating company for proper trunk connection.

h. Error Type 769—The DS1 Interface circuit pack detects a hardware error on the DS1 tie trunk. This error usually occurs after one or more occurrences of error type 513. The trunk has received the belated “on-hook” that it has been waiting for from the far-end switch. The trunk is restored to in-service/idle and can be used for calls. Aux Data 57393 indicates delayed external release on PBX disconnect. This error can be ignored.

i. Error Type 1793—The DS1 Interface circuit pack is out-of-service. See the appropriate DS1-BD/UDS1-BD (DS1/UDS1 Interface Circuit Pack) Maintenance documentation for details.

j. Error Type 2305—Reorder message. The trunk could not be seized. This error will cause the Trunk Seizure Test (#136) to run and is only considered a problem if the Seizure Test fails (in which case Error Type 1025 will also show up). In this case, the trunk may be put in “Ready-for-Service” state (shown as “disconnected” by the status command), which allows only incoming calls. Run the Trunk Seizure Test (#136) and follow its outlined procedures.

k. Error Type 2562—Retry Failure error. This error is logged only. It is not a hardware failure and hence does not start any testing or generate any alarms. This error comes from call processing and is generated when a second attempt (retry) to seize an outgoing trunk fails.

l. Error Type 2817—Glare error. This error is logged only. It is not a hardware failure and hence does not start any testing or generate any alarms. This error is the result of a simultaneous seizure of a two-way trunk from both the near-end and the far-end. Attempt to place the call again. If the error persists, execute the DS1 Tie Trunk Seizure Test (#136) and follow its outlined procedures.

m. Error Type 3840—Port Audit and Update Test (#36) failed due to an internal system error. Enter **status trunk** command and verify the status of the trunk. If the trunk is out-of-service, then enter **release trunk** command to put it back to in-service. Retry the test command. If the test continues to abort, then escalate the problem.

System Technician-Demanded Tests: Descriptions and Error Codes

Always investigate tests in the order presented in the table below when inspecting errors in the system. By clearing error codes associated with the

NPE Crosstalk Test, for example, you may also clear errors generated from other tests in the testing sequence.

Order of Investigation	Short Test Sequence	Long Test Sequence	D/ND[1]
NPE Crosstalk Test (#6)		X	ND
Conference Circuit Test (#7)		X	ND
DS1 Tie Trunk Seizure Test (#136)	X	X	ND
Port Audit and Update Test (#36)	X	X	ND

1 D = Destructive; ND = Nondestructive

NPE Crosstalk Test (#6)

One or more NPEs reside on each circuit pack with a TDM Bus interface. The NPE controls port connectivity and gain, and provides conferencing functions on a per port basis. The NPE Crosstalk Test verifies that this port's NPE channel talks on the selected time slot and never crosses over to time slots reserved for other connections. If the NPE is not working correctly, one-way and noisy connections may be observed. This test is usually only part of a port's Long Test Sequence and takes on the order of 20 to 30 seconds to complete.

Table 10-642. TEST #6 NPE Crosstalk Test

Error Code	Test Result	Description/Recommendation
	ABORT	System resources required for this test are not available. 1. Retry the command at 1-minute intervals a maximum of 5 times.
1000	ABORT	System resources required to run this test were not available. The port may be busy with a valid call. Use **display port UUCSSpp** to determine the trunk group/member number of the port. Use **status trunk** to determine the service state of the port. If the service state indicates that the port is in use, then the port is unavailable for certain tests. You must wait until the port is idle before retesting. 1. If the port status is active but the port is not in use (no calls), check the error log for error type 1025 (see the error log table for a description of this error and required actions). The port may be locked up. 2. If the port status is idle, retry the command at 1-minute intervals for a maximum of 5 times.
1001	ABORT	System resources required to run this test are not available. 1. Retry the command at 1-minute intervals for a maximum of 5 times.
1002	ABORT	The system could not allocate time slots for the test. The system may be under heavy traffic conditions, or it may have time slots out of service due to TDM-BUS errors. Refer to the TDM-BUS (TDM bus) Maintenance Documentation to diagnose any active TDM-BUS errors. 1. If the system has no TDM-BUS errors and is not handling heavy traffic and the port status is idle, retry the command at 1-minute intervals for a maximum of 5 times.
1003	ABORT	The system could not allocate a tone receiver for the test. The system may be oversized for the number of tone detectors present or some of the tone detectors may be out of service. Issue **list measurements tone-receiver** to display basic information about the system's tone receivers. 1. Look for TTR-LEV errors in the error log. If present, refer to the TTR-LEV Maintenance documentation. 2. Look for TONE-PT errors in the error log. If present, refer to the TONE-PT Maintenance documentation. 3. If neither condition exists, retry the test at 1-minute intervals for a maximum of 5 times.

Continued on next page

Table 10-642. TEST #6 NPE Crosstalk Test — *Continued*

Error Code	Test Result	Description/Recommendation
1004	ABORT	The port was seized by a user for a valid call. Use **display port UUCSSpp** to determine the trunk group/member number of the port. Use **status trunk** to determine the service state of the port. If the service state indicates that the port is in use, then the port is unavailable for certain tests. You must wait until the port is idle before retesting. 1. If the port status is idle, retry the command at 1-minute intervals for a maximum of 5 times.
1020	ABORT	The test did not run because of a previously existing error on the specific port or a more general circuit pack error. 1. Examine the Error Log for existing errors against this port or the circuit pack and attempt to diagnose the already existing error.
2000	ABORT	Response to the test request was not received within the allowable time period.
2100	ABORT	System resources required for this test are not available. 1. Retry the command at 1-minute intervals a maximum of 5 times.
2053	ABORT	At least one of the following errors is found on the DS1 circuit pack: 1281—Loss of signal, 1793—Blue Alarm, 2049—Red Alarm, 2305—Yellow Alarm, 1537—Hyperactivity. Look for the above error types in the Hardware Error Log and follow the procedures given in the appropriate DS1-BD or UDS1-BD maintenance documentation for the listed error types.

Continued on next page

Table 10-642. TEST #6 NPE Crosstalk Test — *Continued*

Error Code	Test Result	Description/Recommendation
	FAIL	This can be due to on-board or off-board problems. Off-board problems of concern include EXP-PN and EXP-INTF faults, TDM-BUS faults, and faults associated with the tone detectors/tone generators. Clear all off-board problems before replacing the board. Keep in mind that a TDM-BUS problem is usually the result of a faulty board connected to the backplane or bent pins on the backplane. 1. Look for EXP-PN and/or EXP-INTF errors in the error log. If present, refer to the EXP-PN Maintenance documentation and the EXP-INTF Maintenance documentation. 2. Look for TDM-BUS errors in the error log. If present, refer to the TDM-BUS Maintenance documentation. 3. Look for TONE-BD and/or TONE-PT errors in the error log. If present, refer to the TONE-BD Maintenance documentation and the TONE-PT Maintenance documentation. 4. Retest when the faults from steps 1, 2, and 3 are cleared. Replace the board only if the test fails.
	PASS	The port is correctly using its allocated time slots. User-reported troubles on this port should be investigated using other port tests and by examining station, trunk, or external wiring.
0	NO BOARD	The test could not relate the internal ID to the port (no board). This could be due to incorrect translations, no board is inserted, an incorrect board is inserted, or an insane board is inserted. 1. Check to ensure that the board translations are correct. Use the **list config** command, and resolve any problems that are found. 2. If the board was found to be correctly inserted in step 1, issue the **busyout board** command. 3. Issue the **reset board** command. 4. Issue the **release busy board** command. 5. Issue the **test board long** command. This should re-establish the linkage between the internal ID and the port. If this is not the case, check to see that there is a valid board inserted.

Conference Circuit Test (#7)

One or more NPEs reside on each circuit pack with a TDM Bus interface. The NPE controls port connectivity and gain, and provides conferencing functions on a per-port basis. The Conference Circuit Test verifies that the NPE channel for the port being tested can correctly perform the conferencing function. The NPE is instructed to listen to several different tones and conference the tones together. The resulting signal is then measured by a Tone Detector port. If the level of the tone is within a certain range, the test passes.

Table 10-643. TEST #7 Conference Circuit Test

Error Code	Test Result	Description/Recommendation
	ABORT	System resources required for this test are not available. 1. Retry the command at 1-minute intervals a maximum of 5 times.
1000	ABORT	System resources required to run this test were not available. The port may be busy with a valid call. Use **display port UUCSSpp** to determine the trunk group/member number of the port. Use **status trunk** to determine the service state of the port. If the service state indicates that the port is in use, then the port is unavailable for certain tests. You must wait until the port is idle before retesting. 1. If the port status is active but the port is not in use (no calls), check the error log for error type 1025 (see the error log table for a description of this error and required actions). The port may be locked up. 2. If the port status is idle, retry the command at 1-minute intervals for a maximum of 5 times.
1002	ABORT	The system could not allocate time slots for the test. The system may be under heavy traffic conditions, or it may have time slots out of service due to TDM-BUS errors. The **status health** command can be used to determine if the system is experiencing heavy traffic. Refer to the TDM-BUS (TDM bus) Maintenance Documentation to diagnose any active TDM-BUS errors. 1. If the system has no TDM-BUS errors and is not handling heavy traffic and the port status is idle, retry the command at 1-minute intervals for a maximum of 5 times.

Continued on next page

Table 10-643. TEST #7 Conference Circuit Test — *Continued*

Error Code	Test Result	Description/Recommendation
1003	ABORT	The system could not allocate a tone receiver for the test. The system may be oversized for the number of tone detectors present or some of the tone detectors may be out of service. Issue the **list measurements tone-receiver** command to display basic information about the system's tone receivers. 1. Look for TTR-LEV errors in the error log. If present, refer to the TTR-LEV Maintenance documentation. 2. Look for TONE-PT errors in the error log. If present, refer to the TONE-PT Maintenance documentation. 3. If neither condition exists, retry the test at 1-minute intervals for a maximum of 5 times.
1004	ABORT	The port was seized by a user for a valid call. Use **display port UUCSSpp** to determine the trunk group/member number of the port. Use **status trunk** to determine the service state of the port. If the service state indicates that the port is in use, then the port is unavailable for certain tests. You must wait until the port is idle before retesting. 1. If the port status is idle, retry the command at 1-minute intervals for a maximum of 5 times.
1018	ABORT	Test disabled via administration. This only applies to analog stations. 1. To enable test, set the Test field on the station administration screen for the particular analog station being tested to "y." Use **change station <extension>**.
1020	ABORT	The test did not run due to a previously existing error on the specific port or because of a more general circuit pack error. 1. Examine the Error Log for existing errors against this port or circuit pack, and attempt to diagnose the previously existing error.
2000	ABORT	Response to the test request was not received within the allowable time period.
2100	ABORT	System resources required to run this test are not available. 1. Retry the command at 1-minute intervals a maximum of 5 times.

Continued on next page

Table 10-643. TEST #7 Conference Circuit Test — *Continued*

Error Code	Test Result	Description/Recommendation
2053	ABORT	At least one of the following errors is found on the DS1 circuit pack: 1281—Loss of signal, 1793—Blue Alarm, 2049—Red Alarm, 2305—Yellow Alarm, 1537—Hyperactivity. Look for the above error types in the Hardware Error Log and follow the procedures given in the appropriate DS1-BD or UDS1-BD maintenance documentation for the listed error types.
	FAIL	The NPE of the tested port did not conference the tones correctly. This can cause noisy and unreliable connections. 1. Enter **list configuration board UUCSS** . If the circuit pack is a TN767B vintage 8 or 9, replace the circuit pack with a TN767C V3 or later. The error log may have error type 1281 entries. 2. Test all administered trunks on the board. If one fails, this could be an off-board problem (such as an incoming seizure or an off-hook port seizure during the test). Retest the board. 3. If all of the ports fail, check the CARR-POW (see note below). 4. If several ports fail, check the error log for TONE-BD or TONE-PT errors. If there are such errors, take the appropriate action. When the TONE errors have cleared, rerun the test. 5. If the retry passes and troubles have been reported, coordinate isolation with the far-end PBX. Make sure that the near-end and far-end switches and any NTCE equipment (the CSU's) have the correct administration.

Continued on next page

Table 10-643. TEST #7 Conference Circuit Test — *Continued*

Error Code	Test Result	Description/Recommendation
	FAIL *(cont'd.)*	6. Replace the circuit pack. **NOTE:** If the conference circuit test fails for all ports on a circuit pack, a -5 volt power problem is indicated. If a TN736 or TN752 power unit circuit pack is present, either the 631DB AC power unit or the 676B DC power unit may be defective. (The 631DB power unit is used in a medium cabinet powered by an AC source. The 645B power unit is used in a medium cabinet powered by a DC power source.) The system may contain a TN736 or TN752 power unit or a 631DB AC power unit, but not both types of power units. To investigate problems with a 631DB AC power unit, refer to the CARR-POW (carrier port power unit for AC-powered systems) Maintenance documentation. To investigate problems with a 645B DC power unit, refer to the CARR-POW (carrier port power unit for DC-powered systems) Maintenance documentation. If a red LED on TN736 or TN752 power unit circuit pack is on, replace the pack.
	PASS	The port can correctly conference multiple connections. User-reported troubles on this port should be investigated using other port tests and by examining station, trunk, or external wiring.
0	NO BOARD	The test could not relate the internal ID to the port (no board). This could be due to incorrect translations, no board is inserted, an incorrect board is inserted, or an insane board is inserted. 1. Check to ensure that the board translations are correct. Use **list config** , and resolve any problems that are found. 2. If the board was found to be correctly inserted in step 1, issue the **busyout board** command. 3. Issue the **reset board** command. 4. Issue the **release busy board** command. 5. Issue the **test board long** command. This should re-establish the linkage between the internal ID and the port. If this is not the case, check to see that there is a valid board inserted.

Port Audit and Update Test (#36)

This test sends port level translation data from switch processor to the DS1 Interface circuit pack to ensure that the trunk's translation is correct. Translation updates include the following data: trunk type (in/out), dial type, timing parameters, and signaling bits enabled. The port audit operation verifies the consistency of the current state of the trunk kept by the DS1 Interface circuit pack and the switch software.

Table 10-644. TEST #36 Audit and Update Test

Error Code	Test Result	Description/Recommendation
	ABORT	Internal System Error. 1. Retry the command at 1-minute intervals a maximum of 5 times.
1000	ABORT	System resources required to run this test were not available. The port may be busy with a valid call. Use **display port UUCSSpp** to determine the trunk group/member number of the port. Use **status trunk** to determine the service state of the port. If the service state indicates that the port is in use, then the port is unavailable for certain tests. You must wait until the port is idle before retesting. 1. If the port status is active but the port is not in use (no calls), check the error log for error type 1025 (see the error log table for a description of this error and required actions). The port may be locked up. 2. If the port status is idle, retry the command at 1-minute intervals for a maximum of 5 times.
1006	ABORT	The test was aborted because the trunk is out of service. 1. Use **status trunk** to verify that the trunk is out of service. 2. If the trunk is out of service, determine why. 3. If it is OK to put the trunk back in service, issue **release trunk** to put the trunk back in service, and then retry the test.
2000	ABORT	Response to the test request was not received within the allowable time period.
2100	ABORT	Could not allocate the necessary system resources to run this test. 1. Retry the command at 1-minute intervals a maximum of 5 times.

Continued on next page

Table 10-644. TEST #36 Audit and Update Test — *Continued*

Error Code	Test Result	Description/Recommendation
	FAIL	Internal System Error. 1. Retry the command at 1-minute intervals a maximum of 5 times.
	PASS	Trunk translation has been updated successfully. The current trunk states kept in the DS1 Interface circuit pack and switch software are consistent. If the trunk is busied out, the test does not run, but it does return PASS. To verify that the trunk is in-service: 1. Enter **status trunk** command to verify that the trunk is in-service. If the trunk is in-service, no further action is necessary. If the trunk is out-of-service, continue to Step 2. 2. Enter **release trunk** command to put trunk back into in-service. 3. Retry the test command.
0	NO BOARD	The test could not relate the internal ID to the port (no board). This could be due to incorrect translations, no board is inserted, an incorrect board is inserted, or an insane board is inserted. 1. Check to ensure that the board translations are correct. Use **list config** , and resolve any problems that are found. 2. If the board was found to be correctly inserted in step 1, issue the **busyout board** command. 3. Issue the **reset board** command. 4. Issue the **release busy board** command. 5. Issue the **test board long** command. This should re-establish the linkage between the internal ID and the port. If this is not the case, check to see that there is a valid board inserted.

DS1 Tie Trunk Seizure Test (#136)

The DS1 Tie Trunk Seizure Test is run to verify the trunk's signaling capability. The test is composed of two parts. The first part queries the circuit pack for the following errors: Loss of Signal, Red Alarm, Blue Alarm, Yellow Alarm, and Hyperactivity Alarm. The second part of the test is performed by sending a seizure message to the DS1 Interface circuit pack and expecting an active reply by the DS1 Interface circuit pack. If maintenance software does not receive any reply and the timer expires, the test is aborted. Once the active message is received, a dial pause message is sent to the DS1 Interface circuit pack. If the DS1 Interface circuit pack replies with a dial pulse tone message when the far end responds to the seizure, then the DS1 tie trunk Seizure Test passes. If the far end does not respond to the seizure and the timer expires, and the DS1 Interface circuit pack sends a reorder message back to the maintenance software, then the test fails.

This second part of this test **CANNOT** be run on a trunk if one of the following cases is true:

1. The trunk direction is administered as an incoming only trunk.
2. The trunk is the 24th port on a DS1 Interface circuit pack which is administered using 24th Common Channel Signaling.
3. The trunk has been seized by a normal trunk call.
4. The trunk is administered with maintenance test disabled.
5. The outgoing signal type of the trunk is either automatic or immediate-start.

Table 10-645. TEST #136 DS1 Tie Trunk Seizure Test

Error Code	Test Result	Description/Recommendation
	ABORT	Internal System Error.
1000	ABORT	System resources required to run this test were not available. The port may be busy with a valid call. Use **display port UUCSSpp** to determine the trunk group/member number of the port. Use **status trunk** to determine the service state of the port. If the service state indicates that the port is in use, then the port is unavailable for certain tests. You must wait until the port is idle before retesting. 1. If the port status is active but the port is not in use (no calls), check the error log for error type 1025 (see the error log table for a description of this error and required actions). The port may be locked up. 2. If the port status is idle, retry the command at 1-minute intervals for a maximum of 5 times.

Continued on next page

Table 10-645. TEST #136 DS1 Tie Trunk Seizure Test — *Continued*

Error Code	Test Result	Description/Recommendation
1004	ABORT	Far end is seizing the trunk while the test is ongoing. A glare situation is detected. Current test is designed to be aborted. Use **display port UUCSSpp** to determine the trunk group/member number of the port. Use **status trunk** to determine the service state of the port. If the service state indicates that the port is in use, then the port is unavailable for certain tests. You must wait until the port is idle before retesting. 1. If the port status is idle, retry the command at 1-minute intervals for a maximum of 5 times.
1005	ABORT	Test failed due to incompatible configuration administered in trunk group form. 1. Verify the following fields on the trunk group administration screen: a. Is trunk direction incoming only? b. Is trunk outgoing type either automatic or immediate-start? c. Is trunk the 24th port of the DS1 Interface circuit pack while common control channel signaling is specified? 2. If the trunk has been administered using the above information, then this test should abort.
1018	ABORT	The test was disabled via translation. You may want to determine why the test has been disabled before you enable it. 1. Verify that the 'Maintenance Test' field on the 'Trunk Administration' screen is set to 'n.' To enable the test, change the trunk administration and enter 'y' into the 'Maintenance Test' field. 2. Repeat the test.
1020	ABORT	The test did not run due to an already existing error on the specific port or due to a more general circuit pack error. 1. Examine the error log for existing errors against this port or the circuit pack and attempt to diagnose the already existing error. 2. Retry the test.

Continued on next page

Table 10-645. TEST #136 DS1 Tie Trunk Seizure Test — *Continued*

Error Code	Test Result	Description/Recommendation
1040	ABORT	This test is not performed for trunk ports administered as access endpoints. 1. Verify this port is an access endpoint by using **display port**. 2. If the port has been administered as an access endpoint, this test should abort.
2000	ABORT	Response to the test request was not received within the allowable time period.
2100	ABORT	Could not allocate the necessary system resources to run this test. 1. Retry the command at 1-minute intervals for a maximum of 5 times.
2053	ABORT/ FAIL[1]	At least one of the following errors is found on the circuit pack: 1281: Loss of Signal, 1793: Blue Alarm, 2049: Red Alarm, 2305: Yellow Alarm, 1537: Hyperactivity. 1. Look for the above error types in the Hardware Error Log and follow the procedures given in the DS1-BD tests for the listed error types.
	FAIL	The far-end trunk did not respond to the seizure of the near-end trunk within the allowable time period. This test could have associated in-line errors in the error log. 1. 1) Enter **list configuration board UUCSS** . If the circuit pack is a TN767B vintage 8 or 9, a failure of test 136 causes a subsequent failure of test 7 due to a firmware bug. Eventually, the board and all of its ports will be taken out of service and extraneous on-board alarms will be generated. Replace the circuit pack with a TN767C V3 or later. 2. Verify that the 'Trunk Type' field on the 'Trunk Administration' screen matches the trunk type administered on far-end switch. 3. Look for DS1-BD or UDS1-BD errors in the hardware error log. If present, refer to the DS1-BD (DS1 trunk circuit pack) Maintenance documentation or to the UDS1-BD (UDS1 trunk circuit pack) Maintenance documentation. 4. Retry the test at 1-minute intervals for a maximum of 5 times.

Continued on next page

Table 10-645. TEST #136 DS1 Tie Trunk Seizure Test — *Continued*

Error Code	Test Result	Description/Recommendation
2000	FAIL	Response to the seizure message was not received within the allowable time period. 1. Enter **list configuration board UUCSS** . If the circuit pack is a TN767B vintage 8 or 9, a failure of test 136 causes a subsequent failure of test 7 due to a firmware bug. Eventually, the board and all of its ports will be taken out of service and extraneous on-board alarms will be generated. Replace the circuit pack with a TN767C V3 or later. 2. Verify that the 'Trunk Type' field on the 'Trunk Administration' screen matches the trunk type administered on far-end switch. 3. Look for DS1-BD or UDS1-BD errors in the hardware error log. If present, refer to the DS1-BD (DS1 trunk circuit pack) Maintenance documentation or to the UDS1-BD (UDS1 trunk circuit pack) Maintenance documentation. 4. Retry the test at 1-minute intervals for a maximum of 5 times.
	PASS	The trunk can be seized for an outgoing call.
0	NO BOARD	The test could not relate the internal ID to the port (no board). This could be due to incorrect translations, no board is inserted, an incorrect board is inserted, or an insane board is inserted. 1. Check to ensure that the board translations are correct. Use **list config** , and resolve any problems that are found. 2. If the board was found to be correctly inserted in step 1, issue the **busyout board** command. 3. Issue the **reset board** command. 4. Issue the **release busy board** command. 5. Issue the **test board long** command. This should re-establish the linkage between the internal ID and the port. If this is not the case, check to see that there is a valid board inserted.

1 Earlier G1 Software Versions reported Error Code 2053 as a FAIL

TIE-TRK (Tie Trunk)

MO Name (in Alarm Log)	Alarm Level	Initial Command to Run[1]	Full Name of MO
TIE-TRK[2]	MAJOR[3]	test port PCSSpp l	Tie Trunk
TIE-TRK	MINOR	test port PCSSpp l	Tie Trunk
TIE-TRK	WARNING	test port PCSSpp sh	Tie Trunk

1 Where P is the port network number (1 for PPN and 2 or 3 for EPN); C is the carrier designation (for example, A, B, C, D, or E); SS is the address of the slot in the carrier where the circuit pack is located (for example, 01, 02, ..., etc.); and pp is the 2-digit port number (for example, 01).

2 Not relevant to the TN497 circuit pack.

3 A Major alarm on a trunk indicates that alarms on these trunks are not downgraded by the **set options** command and that at least 75 percent of the trunks in this trunk group are alarmed. (This is not relevant to the TN497 circuit pack.

NOTE:
If ATMS testing is enabled, check the error log for ATMS Errors #3840 and #3841. If the error log indicates that measurements exceeded acceptable thresholds, and if no other trouble is found with the **test trunk** command, run the ATMS test call with the **test analog-testcall port PCCSSpp full** command.

The following circuit packs are covered by this section of TIE-TRK (Tie Trunk):

- TN760 series
- TN437 [G3iV2-386]
- TN439 [G3iV2-386]
- TN458 [G3iV2-386]
- TN497 [G3iV2-386]
- TN2140 [G3iV2-386]

The Tie Trunk circuit pack fits into a port slot and contains four trunk circuits (see Figure 10-97 on page 10-1756). Each of these circuits interface a digital PBX to an analog tie trunk going to another PBX across one-way dedicated circuits (except for the TN497 circuit pack) or across two-way dedicated circuits. Except for the TN439 and TN497 circuit packs, each tie trunk has a 4-wire audio connection and may have two signaling leads (E and M). Each tie trunk for the TN439 and TN497 circuit packs has 2-wire audio connection/signal leads (A and B).

In G3iV1.1-286 or G3iV2-386, a tie trunk port can also be administered as an access endpoint, which is a non-signaling channel with a voice-grade data bandwidth.

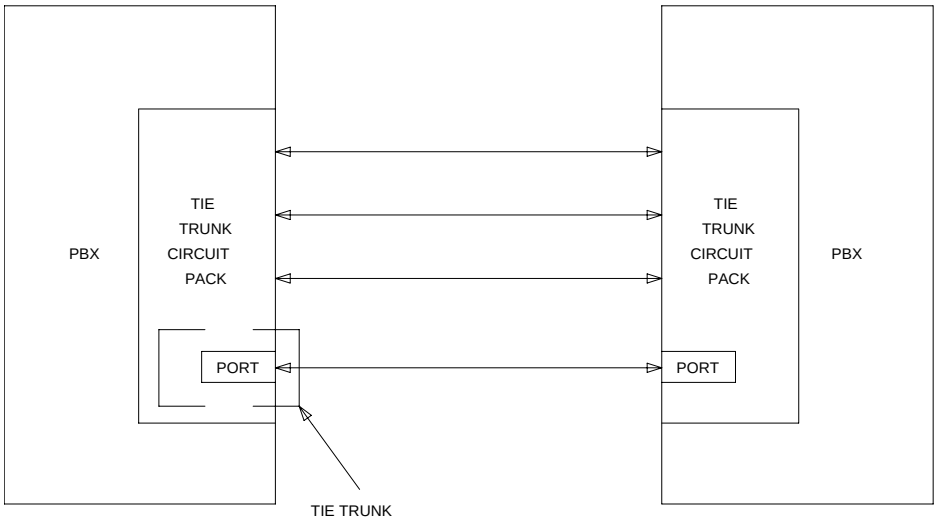

Figure 10-97. Tie Trunk Interactions

The number of tests to be implemented for Tie Trunk maintenance depends upon the TIE-TRK circuit packs involved. The test are as follows:

1. NPE Crosstalk Test—Verifies the switch connection operation of the circuit pack. It verifies that the trunk circuitry talks only on the selected time slot on the TDM Bus and that it never crosses over to time slots reserved for other connections.

2. Loop Around and Conference Circuit Test—Verifies the transmission operation of the circuit pack. It verifies that signals are transmitted to and from each port (Loop Around within the port), and it tests the conference capabilities of all ports.

   This test may fail due to noise induced by adjacent electric power lines. Customers having this problem should resolve it with their local power company. To temporarily alleviate the alarm caused by the failure of this test, the test may be disabled from trunk administration test field.

3. Several seizure tests, including the following:

   — Tie Trunk Seizure Test (not relevant to the TN439 and TN497 circuit packs)—Verifies the seizure capabilities of the circuit pack. For wink start and delay dial outgoing trunks only, (and, for the TN2140 [G3iV2-386] circuit pack, also for continuous-seize-ack and discontinuous-seize-ack), this test activates the M lead and checks for a response from the distant end within 10 seconds. For G3iV1.1-286 or G3iV2-386, this test ABORTS on trunk ports administered as access endpoints.

— Seizure Test (for TN497 circuit packs only)—Verifies the seizure capabilities of the circuit pack. This test seizes the trunk and outpulses a “pause.” The port reports the result of the seizure attempt uplink. The test can be disabled via Trunk Group Administration.

— Tie Trunk Dial Test (for TN439 circuit packs only)—Verifies the seizure and dialing capabilities of the circuit pack. **This test ABORTS on trunk ports administered as access endpoints.**

4. EPF, M, and E Lead Test [G3iV1.1-286 and G3iV2-386 only]—ABORTS on trunk ports administered as access endpoints. This test consists of two parts:
   - E lead test—Checks for the proper activation and deactivation of the port’s E lead.
   - M lead test—Checks the M lead EPF current flow. The results of this test allow for distinguishing between circuit pack and external facility failures.
5. Port Audit Update Test (Audit & Update Test for the TN497 circuit pack)—Sends non-disruptive administrative updates to the circuit pack with no expected response. The test updates the translation information on individual ports of the Tie Trunk. Except for the TN497 circuit pack, these updates include:
   - Immediate, automatic, wink start, or delay dial and for the TN2140 [G3iV2-386], continuous-seize-ack
   - For the TN2140 [G3iV2-386], continuous or discontinuous.
   - Rotary or DTMF senderization in or out
   - Disconnect timing
   - DMTF time slot

Additional in-line testing is performed while a call is in progress. Thus, many in-line errors may occur during operation. See the Error Log table for a description of these errors. These errors may be reproduced by using the trunk (making a call), and checking their occurrence in the Hardware Error Log.

Before a maintenance test can be run on a port, the port is required to be idle. Except for a TN497 circuit pack, if an incoming call seizes the port which is being tested by maintenance, the test is aborted, and the incoming call proceeds.

Non-TN497 circuit packs can be configured for back-to-back testing (also known as connectivity testing) by making translation and cross-connect changes. This testing configuration allows for the connection of Tie Trunks back-to-back in the same switch to verify the operation of Tie Trunk ports. The tests can be performed in either the E&M or simplex modes. For details, refer to the “Analog Tie Trunk Back-to-Back Testing” section in Chapter 5, ‘‘Routine Maintenance Procedures’’

Hardware Error Log Entries and Test to Clear Values

Table 10-646. TIE Trunk Error Log Entries

Error Type	Aux Data	Associated Test	Alarm Level	On/ Off Board	Test to Clear Value
0[1]	0	Any	Any	Any	test port PCSSpp s r 1
1 (a)[2]	16384[2]	None[2]	WARNING[2]	OFF[2]	
1 (b)[2]	57476[2]	None[2]	WARNING[2]	OFF[2]	
1 (c)[2]	57477[2]	None[2]	WARNING[2]	OFF[2]	
1 (d)[3]	57483[3]	None[3]	WARNING[3]	OFF[3]	
1 (e)[2]	57485[2]	None[2]	WARNING[2]	OFF[2]	
15 (f)	Any	Port Audit Update (#36); Audit and Update (#36)			
18 (g)	0	busyout trunk <grp/mbr>	WARNING	OFF	release trunk <grp/mbr>
130 (h)[2]		None[2]	WARNING[4]	ON[4]	test trunk <grp>/<mbr>[4]
257 (i)	57473	None	WARNING	OFF	
257 (j)	57474	None	WARNING	OFF	
257 (k)	57475	None	WARNING	OFF	
513[4]	Any[4]	EPF M and E Lead (#74)[4]	MAJ/MIN/ WRN[1,4]	OFF[4]	test port PCSSpp sh r 3[4]
769[4]	57481[4]	EPF M and E Lead (#74)[4]	MAJ/MIN/ WRN[1,4]	ON[4]	test port PCSSpp sh r 3[4]
1025 (l)	Any[2] 57392[5]	None	MAJ/MIN/ WRN[1,2] MINOR[5]	OFF	
1281[4]	Any [4]	EPF M and E Lead (#74)[4]	MAJ/MIN/ WRN[1,4]	ON[4]	test port PCSSpp sh r 3[4]
1537		Loop Around and Conference (#33)	MAJ/MIN/ WRN[1,4]; MINOR[6]	ON	test port PCSSpp l r 3
1793		Tie Trunk Seizure (#73)[4]; Seizure (#73)[5]; Tie Trunk Dial (#747)[3]	MAJ/MIN/ WRN[4,6]; MINOR	OFF	test port PCSSpp sh r 2[4]; test port PCSSpp s r 2[6]
2049		NPE Crosstalk (#6)	MAJ/MIN/ WRN[1,4]; MINOR[6]	ON	test port PCSSpp l r 3[2]
2305 (m)	50944	None[4]; Seizure (#73)[5]; Tie Trunk Dial (#747)[3]			

Continued on next page

Table 10-646. TIE Trunk Error Log Entries — *Continued*

Error Type	Aux Data	Associated Test	Alarm Level	On/ Off Board	Test to Clear Value
2305 (m)[3]	57424[3]	Tie Trunk Dial (#747)[3]			
2561[5]	0[5]	None[5]v	WARNING[5]	OFF[5]	
2817[5]	0[5]	None[5]	MINOR[5]	OFF[5]	
3073[5]	0[5]	None[5]			
3840 (n)	8000	Analog Transmission (#844-848)		OFF	
3841 (n)		Analog Transmission (#844-848)	MINOR	OFF	test analog testcall PCSS pp r 2

1 Minor alarms on this MO may be downgraded to Warning alarms based on the values used in the **set options** command. If the MINOR alarm is not downgraded by the **set options** values, the MINOR alarm is upgraded to a MAJOR alarm if 75 percent of the trunks in this trunk group are alarmed.

2 Non-TN497 circuit packs only.

3 TN439 circuit packs only.

4 Non-TN439 and non-TN497 circuit packs only

5 TN497 circuit packs only.

6 TN439 and TN497 circuit packs only.

Notes:

a. Digit time-out. This occurs when the far-end PBX begins transmitting digits too late (10 seconds) after receiving the signal indicating ready to receive digits (if any). This can occur on an incoming immediate, wink, or delay dial line. Check the far-end PBX to ensure a translation match at both ends.

b. Rotary dial before wink. This occurs when the far-end PBX starts dialing before the PBX sends the wink on a wink-start or (for non-TN439 circuit packs) on a delay-dial line. Check the far-end PBX to ensure a translation match at both ends.

c. Rotary dial too early. This occurs when the far-end PBX starts dialing too soon (about 50ms) after seizure on a wink start or (for non-TN439 circuit packs) on a delay-dial line. Check the far-end PBX to ensure a translation match at both ends.

d. On hook before wink. This occurs when the far end goes on hook before a wink. Check the far-end PBX to ensure a translation match at both ends.

e. On an outgoing wink-start or delay-dial trunk, the wink time was too short (less than 80ms) for a valid signal. Check the far-end PBX to ensure a translation match at both ends.

f. This is a software audit error that does not indicate any hardware malfunction. Run the Short Test Sequence and investigate associated errors (if any).

g. This indicates that the trunk in question has been busied-out by maintenance personnel.

h. This indicates that the circuit pack has been removed or has been insane for more than 11 minutes. To clear the error, reinsert or replace the circuit pack.

i. The rotary dial rate was too slow (less than eight pulses per second.) Check the far-end PBX to ensure a translation match at both ends.

j. The rotary dial rate was too fast (more than 12 pulses per second.) Check the far-end PBX to ensure a translation match at both ends.

k. The time between digits was too short (less than 300ms). Check the far-end PBX to ensure a translation match at both ends.

l. This indicates that the trunk is still seized with an incoming call. The far-end PBX is not releasing the trunk after the call is dropped. A Minor alarm is generated every four minutes until the far-end PBX releases the trunk. Check the far-end PBX for problems.

   Once the trunk is released from the call, the severity of this problem is decreased. If Error Type 1025 does not appear again, this means that the problem has been corrected. Verify that Error Type 1025 does not reappear in the Error Log.

m. Reorder message. Trunk could not be seized. This error causes the Tie Trunk Seizure Test (#73) to run, and it is considered a problem only if the Seizure Test fails (in which case Error Type 1793 also shows up). In this case, the trunk may be placed in the “Ready-for-Service” state (shown as “disconnected” by the status command), which allows only incoming calls. Run the Tie Trunk Seizure Test and follow its outlined procedures.

n. Test calls made by the Automatic Transmission Measurement System (ATMS) returned measurements that were outside the acceptable limits. Use the **list testcall detail** command to examine specific transmission parameters that are out of spec, and investigate the trunk for that kind of noise. If the noise is acceptable, the limits administered on the “change trunk” screen should be changed.

System Technician-Demanded Tests: Descriptions and Error Codes

Always investigate tests in the order presented in the table below when inspecting errors in the system. By clearing error codes associated with the *Loop Around and Conference Circuit Test,* for example, you may also clear errors generated from other tests in the testing sequence.

Order of Investigation	Short Test Sequence	Long Test Sequence	D/ND[1]
NPE Crosstalk Test (#6)		X	ND
Loop Around and Conference Circuit Test (#33)		X	ND
Tie Trunk Seizure Test (#73)([2]), Tie Trunk Dial Test (#747)([3]), Seizure Test (#73)([4])	X	X	ND
Tie Trunk EPF Test (#74)([5])	X	X	ND
Port Audit and Update Test (#36)([6]), Audit and Update Test (#36)([4])	X	X	ND
Analog Transmission Test (#844-848)	(a)	(a)	

1 D = Destructive; ND = Nondestructive
2 Non-TN439 and non-TN497 circuit packs only
3 TN439 circuit pack only
4 TN497 circuit pack only
5 G3iV1.1-286 and G3iV2-386 only
6 Non-TN497 circuit packs only

Notes:

a. ATMS test are not part of either sequence. They are run either on demand with the **test analog-testcall** command or via the ATMS schedule.

NPE Crosstalk Test (#6)

One or more NPE reside on each circuit pack with a TDM Bus interface. The NPE controls port connectivity and gain, and provides conferencing functions on a per port basis. The NPE Crosstalk Test verifies that this port's NPE channel talks on the selected time slot and never crosses over to time slots reserved for other connections. If the NPE is not working correctly, one-way and noisy connections may be observed. This test is usually only part of a port's Long Test Sequence and takes 20 to 30 seconds to complete.

Table 10-647. TEST #6 NPE Crosstalk Test

Error Code	Test Result	Description/Recommendation
	ABORT	Could not allocate the necessary system resources to run this test. 1. Retry the command at one minute intervals a maximum of 5 times.
1000	ABORT	System resources required to run this test are not available. The trunk may be busy with a valid call. Use **display trunk xx** to determine the trunk group/member number of the port. Use **status trunk** to determine the service state of the port. If the service state indicates that the port is in use, the port is unavailable for certain tests. (Refer to "Status Commands" section in Chapter 8, "Maintenance Commands and Trouble-Clearing Aids" for a full description of all possible states.) You must wait until the port is idle before retesting. 1. If the port status is active, but the port is not in use (no connected ports), check the Error Log for Error Type 1025 (see Error Log table for description of this error and required actions). The port may be locked up. 2. If the port status is idle, retry the command at 1-minute intervals a maximum of 5 times.
1001	ABORT	System resources required to run this test are not available. This could be due to a failure to seize the port. 1. Retry the command at 1-minute intervals a maximum of 5 times.
1002	ABORT	The system could not allocate time slots for the test. The system may be under heavy traffic conditions or it may have time slots out-of-service due to TDM-BUS errors. Refer to TDM-BUS Maintenance to diagnose any active TDM-BUS errors. 1. If the system has no TDM-BUS errors and is not handling heavy traffic, repeat test at 1-minute intervals a maximum of 5 times.
1003	ABORT	The system could not allocate a tone receiver for the test. The system may be oversized for the number of Tone Detectors present or some Tone Detectors may be out-of-service. 1. Look for TTR-LEV errors in the Error Log. If present, refer to TTR-LEV Maintenance documentation. 2. Look for TONE-PT errors in the Error Log. If present, refer to TONE-PT Maintenance documentation. 3. If neither condition exists, retry the test at one minute intervals a maximum of 5 times.

Continued on next page

Table 10-647. TEST #6 NPE Crosstalk Test — *Continued*

Error Code	Test Result	Description/Recommendation
1004	ABORT	(Non-TN497 circuit packs only) The port was seized by a valid call during the test. The test has been aborted. Use **display trunk xx** to determine the trunk group/member number of the port. Use **status trunk** to determine the service state of the port. If the service state indicates that the port is in use, the port is unavailable for certain tests. (Refer to "Status Commands" section in Chapter 8, "Maintenance Commands and Trouble-Clearing Aids" for a full description of all possible states.) You must wait until the port is idle before retesting.
2000	ABORT	Response to the test request was not received within the allowable time period.
2100	ABORT	Could not allocate the necessary system resources to run this test. This could be due to a failure to seize the port. 1. Retry the command at 1-minute intervals a maximum of 5 times.
Any	FAIL	This test can fail due to on-board or off-board problems. Off-board problems of concern include EXP-INTF faults, TDM-BUS faults, and faults associated with the tone detectors/tone generators. Clear all off-board problems before replacing the board. Keep in mind that a TDM-BUS problem is usually the result of a faulty board connected to the backplane or bent pins on the backplane. 1. Look for EXP-INTF errors in the error log. If present, refer to the EXP-INTF Maintenance documentation. 2. Look for TDM-BUS errors in the error log. If present, refer to the TDM-BUS Maintenance documentation. 3. Look for TONE-BD and/or TONE-PT errors in the error log. If present, refer to the TONE-BD Maintenance documentation and the TONE-PT Maintenance documentation. 4. Test the board when the faults from steps 1, 2, and 3 are cleared. Replace the board only if the test fails.

Continued on next page

Table 10-647. TEST #6 NPE Crosstalk Test — *Continued*

Error Code	Test Result	Description/Recommendation
	PASS	The port is correctly using its allocated time slots. User-reported troubles on this port should be investigated using other port tests and examining station, trunk or external wiring.
0	NO BOARD	The test could not relate the internal ID to the port (no board). 1. Check to ensure that the board translations are correct. Translate the board, if necessary. 2. Issue the **busyout board** command. 3. Issue the **reset board** command. 4. Issue the **release busy board** command. 5. Issue the **test board** command. This should re-establish the linkage between the internal ID and the port.

Loop Around and Conference Circuit Test (#33)

This test checks the reflective loop around, and conference capabilities of a tie trunk port circuit. The test uses 404-Hz, 1004-Hz, and 2804-Hz tones. This is an on-board test only, and each tone is transmitted through the loop and checked upon return.

This test may fail due to noise induced by adjacent electric power lines. Customers having this problem should resolve it with their local power company. To temporarily alleviate the alarm caused by the failure of this test, the test may be disabled from the trunk administration Test field.

Table 10-648. TEST #33 Loop Around and Conference Circuit Test

Error Code	Test Result	Description/Recommendation
	ABORT	Could not allocate the necessary system resources to run this test. This could be due to a failure to seize the port. 1. Retry the command at 1-minute intervals a maximum of 5 times.
7	ABORT	The conference circuit test was aborted. 1. Retry the command at 1-minute intervals a maximum of 5 times.

Continued on next page

Table 10-648. TEST #33 Loop Around and Conference Circuit Test — *Continued*

Error Code	Test Result	Description/Recommendation
129	ABORT	The 404-Hz reflective loop around test aborted. Response to the test request was not received within the allowable time period.
131		The 1004-Hz reflective loop around test aborted. Response to the test request was not received within the allowable time period.
133		The 2804-Hz reflective loop around test aborted. Response to the test request was not received within the allowable time period. 1. Retry the command at 1-minute intervals for a maximum of 5 times.
1000	ABORT	System resources required to run this test are not available. The trunk may be busy with a valid call. Use **display trunk xx** to determine the trunk group/member number of the port. Use **status trunk** to determine the service state of the port. If the service state indicates that the port is in use, the port is unavailable for certain tests. (Refer to the "Status Commands" section in Chapter 8, ''Maintenance Commands and Trouble-Clearing Aids'' for a full description of all possible states.) You must wait until the port is idle before retesting. 1. If the port status is active, but the port is not in use (no calls), check the Error Log for Error Type 1025 (see Error Log table for a description of this error and required actions). The port may be locked up. 2. If the port status is idle, retry the command at 1-minute intervals a maximum of 5 times.
1002	ABORT	The system could not allocate time slots for the test. The system may be under heavy traffic conditions or it may have time slots out-of-service due to TDM-BUS errors. Refer to TDM-BUS Maintenance to diagnose any active TDM-BUS errors. 1. If system has no TDM-BUS errors and is not handling heavy traffic, repeat test at 1-minute intervals a maximum of 5 times.

Continued on next page

Table 10-648. TEST #33 Loop Around and Conference Circuit Test — *Continued*

Error Code	Test Result	Description/Recommendation
1003	ABORT	The system could not allocate a tone receiver for the test. The system may be oversized for the number of Tone Detectors present, or some Tone Detectors may be out-of-service. 1. Look for TTR-LEV errors in the Error Log. If present, refer to TTR-LEV Maintenance documentation. 2. Look for TONE-PT errors in the Error Log. If present, refer to TONE-PT Maintenance documentation. 3. If neither condition exists, retry the command at 1-minute intervals a maximum of 5 times.
1004	ABORT	(Non-TN497 circuit packs only.) The port was seized by a valid call during the test. The test has been aborted. Use **display trunk xx** to determine the trunk group/member number of the port. Use **status trunk** to determine the service state of the port. If the service state indicates that the port is in use, the port is unavailable for certain tests. (Refer to the "Status Commands" section in Chapter 8, ''Maintenance Commands and Trouble-Clearing Aids'' for a full description of all possible states.) You must wait until the port is idle before retesting.
1018	ABORT	The test has been disabled via administration. Verify that the 'Maintenance Test' field on the 'Trunk Group' form is set to 'n'. To enable the test, issue the 'change trunk-group x' command (x equals the number of the trunk group to be tested). Then, change the entry in the 'Maintenance Test' field on the form to 'y'.
2000	ABORT	Response to the test request was not received within the allowable time period.
2100	ABORT	Could not allocate the necessary system resources to run this test. This could be due to a failure to seize the port. 1. Retry the command at 1-minute intervals a maximum of 5 times.

Continued on next page

Table 10-648. TEST #33 Loop Around and Conference Circuit Test — *Continued*

Error Code	Test Result	Description/Recommendation
7,	FAIL	The conference capabilities of the port failed (Error Code 7).
129,		The reflective 404-Hz Tone Test failed. No transmission was detected to or from the port (Error Code 129).
131, or		The reflective 1004-Hz Tone Test failed. No transmission was detected to or from the port (Error Code 131).
133		The reflective 2804-Hz Tone Test failed. No transmission was detected to or from the port (Error Code 133). FAULT ISOLATION: Proceed as follows unless power or tone problems are suspected (see notes on the next page). 1. To make sure the problem is on-board, disconnect the port from the CO and retry the test. Coordinate this with the CO, or do it after busy hours; otherwise, the CO may put the connection out of service. 2. If the retry fails, replace the circuit pack. 3. If the retry passes and no troubles have been reported, disable the test. If the retry passes and troubles have been reported, refer the problem to the CO. *More information continues on the next page.*

Continued on next page

Table 10-648. TEST #33 Loop Around and Conference Circuit Test — *Continued*

Error Code	Test Result	Description/Recommendation
7, 129, 131, or 133 *(cont'd.)*	FAIL *(cont'd.)*	**NOTE:** If the loop around and conference circuit test fails for all ports on a circuit pack, a -5 volt power problem is indicated. If a TN736 or TN752 power unit circuit pack is present, either the 631DB AC power unit or the 676B DC power unit may be defective. (The 631DB power unit is used in a medium cabinet powered by an AC source. The 645B power unit is used in a medium cabinet powered by a DC power source.) The system may contain a TN736 or TN752 power unit circuit pack or a 631DB AC power unit, but not both types of power units. To investigate problems with a 631DB AC power unit, refer to the CARR-POW (carrier port power unit for AC-powered systems) Maintenance documentation. To investigate problems with a 645B DC power unit, refer to the CARR-POW (carrier port power unit for DC-powered systems) Maintenance documentation. If a red LED on TN736 or TN752 power unit circuit pack is on, replace the pack. If the test fails on more than 1 port, check for errors on the TONE-BD or the TONE-PT. If errors, take appropriate actions. When the tone errors are cleared, rerun the test. If the test fails again, see FAULT ISOLATION above.
	PASS	Tie trunk Loop Around and Conference Test is successful. This port is functioning properly. 1. If users are reporting troubles, examine loop connections to the port.
0	NO BOARD	The test could not relate the internal ID to the port (no board). 1. Check to ensure that the board translations are correct. Translate the board, if necessary. 2. Issue the **busyout board** command. 3. Issue the **reset board** command. 4. Issue the **release busy board** command. 5. Issue the **test board** command. This should re-establish the linkage between the internal ID and the port.

Audit Update Test (#36)

This test sends updates of the Tie Trunk port translation for all ports on the circuit pack that have been translated. The update is non-disruptive and guards against possible corruption of translation data contained on the board. No response message is expected from the circuit pack once it receives translation updates. The port translation data for non-TN439 and non-TN497 circuit packs includes the following: Immediate, automatic, wink-start or delay dial trunk, rotary or DTMF senderization in or out, disconnect timing from 10 to 2550ms in 10ms increments, and DMTF time slot. (Continuous-seize-ack is also included for the TN2140 [G3iV2-386] circuit pack.) The port translation data for the TN439 circuit pack includes the following: Immediate or wink-start trunk, rotary or DTMF senderization in or out, disconnect timing from 10 to 2550ms in 10ms increments, and DMTF time slot.

Table 10-649. TEST #36 Audit Update Test

Error Code	Test Result	Description/Recommendation
	ABORT	Could not allocate the necessary system resources to run this test. 1. Retry the command at one minute intervals a maximum of 5 times.
1006	ABORT	(TN439 and TN497 circuit packs only.) The port is in the out-of-service state. The test cannot be run. 1. Retry the command once the port is in service.
2100	ABORT	Could not allocate the necessary system resources to run the test. This could be due to a failure to seize the port. 1. Retry the command at 1-minute intervals a maximum of 5 times.
	FAIL	Internal System Error. 1. Retry the command at one minute intervals a maximum of 5 times.

Continued on next page

Table 10-649. TEST #36 Audit Update Test — *Continued*

Error Code	Test Result	Description/Recommendation
	PASS	This test passed. Translation information was successfully updated on the circuit pack. 1. If signaling troubles are reported, verify translation information for this port. (Non-TN439 and non-TN497 circuit packs only.) If the trunk is busied out, the test does not run, but it does return PASS. To verify that the trunk is in-service: 1. Enter **status trunk** to verify that the trunk is in-service. If the trunk is in-service, no further action is necessary. If the trunk is out-of-service, continue to Step 2. 2. Enter **release trunk** to put trunk back into in-service. 3. Retry the test command.
0	NO BOARD	The test could not relate the internal ID to the port (no board). 1. Check to ensure that the board translations are correct. Translate the board, if necessary. 2. Issue the **busyout board** command. 3. Issue the **reset board** command. 4. Issue the **release busy board** command. 5. Issue the **test board** command. This should re-establish the linkage between the internal ID and the port.

Tie Trunk Seizure Test (#73), Tie Trunk Dial Test (#747). Seizure Test(#73)

The Tie Trunk Seizure Test activates the M lead and checks for a response from the external end within 10 seconds. This test is applicable only to wink start and delay dial outgoing trunks. (For the TN2140 [G3iV2-386] circuit pack, the trunk must also be continuous-seize-ack and discontinuous-seize-ack).

The Tie Trunk Dial Test seizes the trunk and outpulses a pause digit.

For a port administered as TGU or a TGE, the Seizure Test internally seizes the trunk and outpulses a “pause.” The report reports the result of the seizure attempt uplink.

Table 10-650. Seizure Tests (#73, #747, #73)

Error Code	Test Result	Description/Recommendation
	ABORT	Could not allocate the necessary system resources to run this test. 1. Retry the command at one minute intervals a maximum of 5 times.
1000	ABORT	System resources required to run this test are not available. The trunk may be busy with a valid call. Use **display trunk xx** to determine the trunk group/member number of the port. Use **status trunk** to determine the service state of the port. If the service state indicates that the port is in use, then the port is unavailable for certain tests. You must wait until the port is idle before retesting. 1. If the port status is active, but the port is not in use (no calls), then check the Error Log for Error Type 1025 (see Error Log table for description of this error and required actions). The port may be locked up. The far-end PBX may not be releasing. 2. If the port status is idle, then retry the command at 1-minute intervals a maximum of 5 times.
1004	ABORT	(Non-TN497 circuit packs only.) The port was seized by a valid call during the test. The test has been aborted. Use **display trunk xx** to determine the trunk group/member number of the port. Use **status trunk** to determine the service state of the port. If the service state indicates that the port is in use, the port is unavailable for certain tests. (Refer to the “Status Commands” section in Chapter 8, ‘‘Maintenance Commands and Trouble-Clearing Aids’’ for a full description of all possible states.) You must wait until the port is idle before retesting. 1. Retry the command at one minute intervals a maximum of 5 times. 2. If the test continues to abort, and the port is not in use, escalate the problem.

Continued on next page

Table 10-650. Seizure Tests (#73, #747, #73) — *Continued*

Error Code	Test Result	Description/Recommendation
1005	ABORT	(Non-TN439 circuit packs only.) This test is not valid for this trunk translation. For this test to run, a delay dial trunk (or, for non-TN497 circuit packs, a wink-start trunk) must be in effect, and the trunk must be outgoing or two-way. Also, for the TN2140 [G3iV2-386], the trunk must be continuous-seize-ack or discontinuous-seize-ack. 1. Check trunk translation. If it is not a wink-start or delay dial trunk, this abort message should be ignored. (For the TN2140 [G3iV2-386], disregard this abort on a trunk that is not continuous-seize-ack or discontinuous-seize-ack.)
1018	ABORT	Test disabled via administration. 1. Verify that the "Maintenance Tests?" field on the Trunk Group Form is set to "n." To enable the test, issue **change trunk-group x** where "x" equals the number of the trunk group to be tested. Then change the entry in the "Maintenance Tests?" field on the form to "y."
1040	ABORT	(Non-TN497 circuit packs only.) This test is not performed for trunk ports administered as access endpoints. 1. Verify this port is an access endpoint by using **display port**. 2. If the port has been administered as an access endpoint, this test should abort.
2000	ABORT	Seizure message is not received back within 10 seconds. 1. Retry the command at 1-minute intervals a maximum of 5 times. 2. If the test continues to fail, check the far-end PBX to ensure a translation match at both ends. 3. Check the facility.
2100	ABORT	Could not allocate the necessary system resources to run the test. This could be due to a failure to seize the port. 1. Retry the command at 1-minute intervals a maximum of 5 times.

Continued on next page

Table 10-650. Seizure Tests (#73, #747, #73) — *Continued*

Error Code	Test Result	Description/Recommendation
3	FAIL	(TN439 circuit packs only.) No dial tone detected from the other end. 1. Retry the command at one minute intervals a maximum of 5 times. 2. If the test continues to fail, check the far-end PBX to ensure a translation match at both ends. 3. Check the facility.
	PASS	The relevant seizure test passes. This port is functioning properly. 1. If users are reporting troubles, examine loop connections to the port, wiring, and stations.
0	NO BOARD	The test could not relate the internal ID to the port (no board). 1. Check to ensure that the board translations are correct. Translate the board, if necessary. 2. Issue the **busyout board** command. 3. Issue the **reset board** command. 4. Issue the **release busy board** command. 5. Issue the **test board** command. This should re-establish the linkage between the internal ID and the port.

Tie Trunk EPF Test (#74)

This test consists of an E lead and M lead test. The E lead test checks for the proper activation and deactivation of the port's E lead. The M lead test checks the M lead EPF current flow. The processor sends an M lead test request to the circuit pack and receives the results. The returned results are measured to see if a port or external tie trunk line fails.

Table 10-651. TEST #74 Tie Trunk EPF Test

Error Code	Test Result	Description/Recommendation
	ABORT	Could not allocate the necessary system resources to run the test. This could be due to a failure to seize the port. 1. Retry the command at 1-minute intervals a maximum of 5 times.
1	ABORT	Internal System Error. 1. Retry the command at 1-minute intervals a maximum of 5 times.
1000	ABORT	System resources required to run this test are not available. The trunk may be busy with a valid call. Use **display trunk xx** to determine trunk group/member number of the port. Use **status trunk** to determine the service state of the port. If the service state indicates that the port is in use, then the port is unavailable for certain tests. You must wait until the port is idle before retesting. 1. If the port status is active, but the port is not in use (no calls), then check the Error Log for Error Type 1025 (see Error Log table for description of this error and required actions). The port may be locked up. The far-end PBX may not be releasing. 2. If the port status is idle, then retry the command at 1-minute intervals a maximum of 5 times.
1004	ABORT	The port was seized by a valid call during the test. The test has been aborted. Use **display trunk xx** to determine the trunk group/member number of the port. Use **status trunk** to determine the service state of the port. If the service state indicates that the port is in use, the port is unavailable for certain tests. (Refer to the “Status Commands” section in Chapter 8, ‘‘Maintenance Commands and Trouble-Clearing Aids’’ for a full description of all possible states.) You must wait until the port is idle before retesting. 1. Retry the command at 1-minute intervals a maximum of 5 times. 2. If the test continues to abort, and the port is not in use, escalate the problem.
1005	ABORT	This test is not valid for this trunk translation. Must be a Type-1 standard trunk for this test to run. 1. Check trunk configuration. If it is not a Type-1 standard trunk, this abort message should be ignored.

Continued on next page

Table 10-651. TEST #74 Tie Trunk EPF Test — *Continued*

Error Code	Test Result	Description/Recommendation
1014	ABORT	The test was aborted because the circuit pack has not been inserted into the system. 1. Use **list configuration board** to make sure the circuit pack is inserted in the carrier. 2. If the board is not inserted, make sure the circuit pack is inserted in the carrier and fully seated. 3. If the test continues to fail, escalate problem.
1040	ABORT	This test is not performed for trunk ports administered as “access endpoints.” 1. Verify this port is an access endpoint by using the **display port** command. 2. If the port has been administered as an access endpoint, this test should abort.
2000	ABORT	Response to the test request was not received within the allowable time period.
2100	ABORT	Could not allocate the necessary system resources to run the test. This could be due to a failure to seize the port. 1. Retry the command at 1-minute intervals a maximum of 5 times.
1	FAIL	The E lead test failed due to an on-board port problem. 1. Replace the circuit pack.
2	FAIL	The M lead test failed. The EPF has experienced an overcurrent condition, perhaps due to the external M lead. 1. To make sure the problem is on-board, disconnect the facility from the pack and retry the test. 2. If the test fails, replace the circuit pack. Otherwise, check the external wiring toward the far-end PBX.

Continued on next page

Table 10-651. TEST #74 Tie Trunk EPF Test — *Continued*

Error Code	Test Result	Description/Recommendation
	PASS	Tie Trunk EPF test is successful. This port is functioning properly. 1. If users are reporting troubles, examine loop connections to the port.
0	NO BOARD	The test could not relate the internal ID to the port (no board). 1. Check to ensure that the board translations are correct. Translate the board, if necessary. 2. Issue the **busyout board** command. 3. Issue the **reset board** command. 4. Issue the **release busy board** command. 5. Issue the **test board** command. This should re-establish the linkage between the internal ID and the port.

Transmission Test (#844-848)

This test is non-destructive.

NOTE:
Tests #844-848 are not supported on a International switch.

These tests are run by the Automatic Transmission Measurement System (ATMS). They are not part of the long or short trunk test sequences. Instead, they are run on demand with the **test analog-testcall** command or as part of ATMS scheduled testing.

The test call is run from an analog port on a TN771 Maintenance/Test circuit pack. It attempts to seize a port and make a call to a terminating test line (TTL) on the trunk's far end. Transmission performance measurements are made and compared to administered thresholds. Errors are generated when results fall outside of "marginal" or "unacceptable" thresholds. Detail and summary measurement reports are obtainable via the **list testcalls** command.

Table 10-652. TEST #844-848 Transmission Test

Error Code	Test Result	Description/Recommendation
1000	ABORT	System resources required to run this test are not available. The port may be busy with a valid call. Use **display port PCSSpp** to determine the trunk group/member number of the port. Use the "status trunk" command to determine the service state of the port. If the service state indicates that the port is in use, then the port unavailable for this test. (Refer to the "Status Commands" section in Chapter 8, "Maintenance Commands and Trouble-Clearing Aids" for a full description of all possible states.) You must wait until the port is idle before retesting. 1. If the port status is idle, then retry the command at 1-minute intervals for a maximum of 5 retries.
1001	ABORT	Could not allocate the necessary system resources to run this test. 1. Retry the command at 1-minute intervals for a maximum of 5 retries.
1002	ABORT	The system could not allocate timeslots for the test. The system may be under heavy traffic conditions or it may have timeslots out of service due to TDM bus errors. Refer to TDM Bus Maintenance to diagnose any active TDM bus errors. 1. If system has no TDM bus errors and is not handling heavy traffic, repeat test at 1-minute intervals for a maximum of 5 retries.
1004	ABORT	The port has been seized by a user for a valid call. Use status trunk to determine when the port is available for testing. 1. Retry the command at 1-minute intervals for a maximum of 5 retries. 2. If the test continues to abort and the port is not in use, escalate the problem.
1005	ABORT	Trunk has been administered as incoming-only; transmission tests can only be run on outgoing trunks.
1115	ABORT	The near end test line on the TN771 circuit pack could not be allocated. 1. Verify that the TN771 circuit pack is in service and that port 1 is administered and in service with the **status port** command. 2. retry the command at 1-minute intervals for a maximum of 5 retries.

Continued on next page

Table 10-652. TEST #844-848 Transmission Test — *Continued*

Error Code	Test Result	Description/Recommendation
1900	ABORT	The test completion message was not received from the TN771 circuit pack. 1. Test the TN771 circuit packs.
1901	ABORT	This error occurs when the TN771 circuit pack uplinks a message that is not the proper response for this test. The anticipated uplink messages are seize, ring or answer. 1. Verify that the Trunk is administered properly.
1905	ABORT	Intercept tone detected from far end. 1. Get the test line data from the and verify it with the far end. Dial the test number manually to see if the TTL is reached. If it is not, then either the number is wrong, or the far end is administered incorrectly.
1906	ABORT	Reorder tone detected from far end. 1. See actions for error code 1905.
1907	ABORT	Other unexpected tone detected from far end. 1. See actions for error code 1905.
1913	ABORT	Audible Ring detected from far end. 1. See actions for error code 1905.
1914	ABORT	Unidentified interrupted tone detected from far end. 1. See actions for error code 1905
1915	ABORT	Busy tone detected from far end. 1. Since the test line at the far end was busy. Try the test again. 2. If the test continues to abort, the problem is with the far end system.
1918	ABORT	Test progress tone not removed from far end (type 105 test line only). 1. The problem is with the far end system; a technician at the far end should test the test line (TN771 or ADFTC).
1919	ABORT	Unexpected far end release 1. The problem is with the far end system; a technician at the far end should test the test line (TN771 or ADFTC).
1920	ABORT	No response from far end. 1. The problem is with the far end system; a technician at the far end should test the test line (TN771 or ADFTC).

Continued on next page

Table 10-652. TEST #844-848 Transmission Test — *Continued*

Error Code	Test Result	Description/Recommendation
1921	ABORT	No data returned from far end. 1. The problem is with the far end system; a technician at the far end should test the test line (TN771 or ADFTC).
1922	ABORT	Steady, unidentifiable tone from far end 1. See actions for error code 1905.
1923	ABORT	Broadband energy detected from far end (such as voice or announcement). 1. See actions for error code 1905.
1924	ABORT	No test tone from far end 1. See actions for error code 1905.
1938	ABORT	Near-end self test failed. 1. Test the TN771 circuit packs.
1939	ABORT	Loss self check at 0dBm at 1004 Hz failed. 1. Test the TN771 circuit packs.
1940	ABORT	Far end noise self check failed. 1. The problem is with the far end system; a technician at the far end should test the test line (TN771 or ADFTC).
1941	ABORT	High frequency singing return loss self check failed.
1942	ABORT	Echo return loss self check failed.
1943	ABORT	Singing return loss self check failed.
1944	ABORT	Loss self check at -16 dBm at 1004 Hz failed.
1945	ABORT	Loss self check at -16 dBm at 404 Hz failed.
1946	ABORT	Loss self check at -16 dBm at 2804 Hz failed.
1947	ABORT	Noise with tone self check failed. 1. Test the TN771 circuit packs.
2000	ABORT	The test timed out while waiting for a response from the TN771 circuit pack. 1. Retry the command at 1-minute intervals for a maximum of 5 retries.
2012	ABORT	An internal software error occurred. 1. Retry the command at 1-minute intervals for a maximum of 5 retries.

Continued on next page

Table 10-652. TEST #844-848 Transmission Test — *Continued*

Error Code	Test Result	Description/Recommendation
2053	ABORT	The test call could not be established, but no information on why is available. 1. Retry the command at 1-minute intervals for a maximum of 5 retries.
2056	ABORT	An error occurred while trying to obtain results from the TN771 circuit pack. 1. Test the TN771 circuit packs.
	FAIL	Measured transmission performance was in the unacceptable range as administered on the trunk group form. Retrieve a measurement report via **list testcalls**. Make sure that ATMS thresholds are set properly on page 4 of the trunk group form. Besides the facility, test failures can be caused by faulty test lines or switch paths. If the measurements point to a facility problem, report the results to the trunk vendor.
8000	FAIL	Measured transmission performance was in the marginal range as administered on the trunk group form. This generally means that the trunk is usable but has an undesirable amount of noise or loss. If the user does not report unacceptable effects, it may not be necessary to take any action. Retrieve a measurement report via **list testcalls**. Make sure that ATMS thresholds are set properly on page 4 of the trunk group form.

TIME-DAY (Time of Day)

MO Name (in Alarm Log)	Alarm Level	Initial Command To Run	Full Name of MO
TIME-DAY	MINOR	set time	Time of Day

The time of day contains the current year, month, day of the week, day of the month, hour, minute, and second. The Time of Day maintenance object is responsible for monitoring the time-of-day clock and raising an alarm if the time-of-day clock is not set or cannot be read by the software. If the time-of-day clock is not set or cannot be read by the software, many features such as Time-of-Day Routing, CDR, ISDN Call-by-Call, Duplication, and so on will be either inoperative or incorrect. The time-of-day clock should be set using the **set time** command whenever the system is initially powered up or the TN1648 SYSAM circuit pack is replaced.

The time-of-day clock can be read with the **display time** command and set via the **set time** command. The time-of-day clock resides on the TN1648 SYSAM circuit pack and has a backup battery to save the time of day during power failures. If the TN1648 SYSAM circuit pack is physically removed from the carrier, the contents of the time-of-day clock is lost and the time of day must be set when the TN1648 SYSAM circuit pack is re-inserted.

Error Log Entries and Test to Clear Values

Table 10-653. Time of Day Error Log Entries

Error Type	Aux Data	Associated Test	Alarm Level	On/Off Board	Test to Clear Value
0	0	Any	Any	Any	display time
247[1]	0	none	MINOR	OFF	set time

1 This error indicates that software cannot read the time-of-day clock on the TN1648 SYSAM circuit pack. During this condition, all time stamps on Alarm Log entries, Hardware Error Log entries, and Software Error Log entries are potentially inaccurate. In addition, any features that are sensitive to the time of day (such as SMDR, Time-of-Day Routing, ISDN Call-by-Call) will not function correctly.

To resolve the alarm, do the following:

1. Use the **set time** command to set the time of day.
2. Use **display time** to display the time of day. If the time of day is displayed correctly, wait 15 minutes and verify that the alarm is retired. If the alarm has not been retired, continue with Step 3.
3. Test the active TN1648 SYSAM circuit pack using **test maintenance [a | b] sh**. If any tests fail, refer to the repair procedures for the SYSAM circuit pack before further investigating time-of-day problems. If all tests PASS and the alarm has not been retired, proceed to Step 4.
4. Replace the active TN1648 SYSAM circuit pack must be replaced. See “Replacing SPE Circuit Packs” in Chapter 5. The alarm should be resolved within 15 minutes of replacing the SYSAM and resetting the time with **set time**.

TONE-BD (Tone-Clock Circuit Pack)

MO Name (in Alarm Log)	Alarm Level	Initial Command to Run[1]	Full Name of MO
	MAJOR	test tone-clock PC	Tone-Clock Circuit Pack
TONE-BD	MINOR	test tone-clock PC	Tone-Clock Circuit Pack
TONE-BD	WARNING	release tone-clock PC	Tone-Clock Circuit Pack

1 P is the port network number (1 for PPN, 2-3 for EPNs). C is the carrier designation (A, B, C, D, or E).

The Tone-Clock circuit pack functionality is provided by two independent objects in the same circuit pack. The tone generator provides all the tones needed by the system and the clock generates the system clocks for the Time Division Multiplex (TDM) Bus and aids in monitoring and selecting internal synchronization references.

When resolving errors/alarms on the Tone-Clock circuit pack, the following should be used also:

- Use the **set tone-clock PC** command to establish the tone and synchronization resources for the system.
- TONE-PT (Tone Generator) Maintenance documentation.
- TDM-CLK (TDM Bus Clock) Maintenance documentation.
- SYNC (Synchronization) Maintenance documentation.

The TN2182 is a combined Tone-Clock-Detector circuit pack which contains a third independent function not available on the TN768 or TN780. The TN2182 contains 8 ports used for all-purpose tone detection. These ports are called Enhanced Tone Receiver ports (ETR-PT) and are described in the documentation for ETR-PT.

Tone-Clock Circuit Packs and System Reliability Options

The following sections describe the relationship between the various System Reliability Options and Tone-Clock circuit pack configurations.

Standard Reliability Option

Systems with the Standard Reliability Option (no duplication options) have one Tone-Clock circuit pack in each port network (PPN and EPN). For the PPN or the EPN this is in the A carrier. This Tone-Clock circuit pack generates clocks and provides system tones for all carriers of the port network it resides on.

High Reliability Option

Systems with the High Reliability Option (duplicated SPE, simplex PNC) have one Tone-Clock circuit pack in each PPN control carrier, A and B. One Tone-Clock circuit pack will be actively generating system clock signals for PPN components, while the other will be in standby mode, ready to take over in the event of a Tone-Clock interchange. Similarly, one Tone-Clock circuit pack will be actively providing system tones for the PPN, while the other will be in standby mode. Normally, the same Tone-Clock circuit pack will be active for both tones and clock signals, but these responsibilities may be divided if neither circuit pack is able to perform both functions. The **status port-network** command will indicate which Tone-Clock circuit pack is actively performing each function.

For systems using the TN2182 Tone-Clock-Detector circuit pack, tone generation and clock generation behaves the same as other clock boards with one being active and one being standby. But the tone detector ports (ETR-PTs) of the TN2182 are always considered available and in-service regardless of the active/standby state of the tones or clock for a specific circuit pack.

EPN Tone-Clock circuit pack configuration is the same as for the Standard Reliability Option. Each EPN Tone-Clock circuit pack will be active for both tones and clock signals for its port network.

Critical Reliability Option

Systems with the Critical Reliability Option (SPE duplication and PNC duplication) have two Tone-Clock circuit packs associated with the PPN, as in the High Reliability Option case, and two more Tone-Clock circuit packs for each EPN. For the EPN, these are in carriers A and B. As in the previous case, one Tone-Clock in each Port Network is active, supplying system clocks and tones, and the other is in standby mode.

Tone-Clock Interchange Strategy

The Tone-Clock circuit pack interchanges are controlled both by manual intervention and by maintenance software strategies.

The manual interchange strategy for Tone-Clock circuit packs differs slightly between the PPN and any EPNs on a system.

Manual PPN Tone-Clock Interchange

In a PPN with more than one Tone-Clock circuit pack, the intention is to assure that the one considered most healthy is active at any given time. *This is independent of the SPE Duplication strategy*, in the sense that the active Tone-Clock circuit pack need not change with an interchange of SPE carriers. Rather, except for the effect of the manual intervention discussed earlier, Tone-Clock interchanges occur only as a result of changes in the health of Tone-Clock circuit packs, as perceived by maintenance software. When both Tone-Clock circuit packs are equally healthy, no preference is given to one over the other, regardless of which SPE carrier is active.

It is possible to manually control Tone-Clock interchanges in three ways.

1. The **standby** Tone-Clock circuit pack may be made unavailable for most purposes by using the **busyout tone-clock PC** command. Such a Tone-Clock may not be selected with console commands, nor with normal maintenance software activities, until it has been made available again with the **restore tone-clock PC** command.

   NOTE:
   busyout tone-clock is not allowed for active Tone-Clock circuit packs.

2. The SPE processor lock switches may be used to force a particular SPE to be active. *This method overrides all other Tone-Clock interchange controls*. If there is a Tone-Clock circuit pack in the same carrier as the active SPE, it will become active, regardless of its health. If the Tone-Clock circuit pack in the selected SPE was in the *busyout* state (see item 1 above), it will automatically be released and made active. While the lock switches are set for a particular carrier, *no manual intervention or software error detection* will cause an interchange of Tone-Clocks; the Tone-Clock circuit pack in the standby SPE carrier can never become active. If there is no Tone-Clock circuit pack in the selected SPE at the time the switches are set, but one is later installed, the system will interchange to it regardless of its health. If the Tone-Clock circuit pack is removed from an SPE while the switches are set, *no interchange will occur*; the system will have no active tone-clock. When the lock switches are restored to the neutral position, a tone clock interchange will occur only if the standby Tone-Clock circuit pack is healthier than the active one.

3. A particular Tone-Clock circuit pack can be made active by issuing the **set tone-clock PC [override]** command. If the Tone-Clock to be made active is less healthy than the currently active one, no interchange will occur unless the **override** option is specified; without it a message will inform the user that it is required.

   Once a Tone-Clock circuit pack is made active by the **set tone-clock PC** command, it will stay active until either the **set tone-clock PC** command is issued again to make the other circuit pack active, or until a fault occurs in the active Tone-Clock circuit pack, which causes the system to interchange Tone-Clocks.

Manual EPN Tone-Clock Interchange

In an EPN with duplicated Tone-Clock circuit packs, one circuit pack is always *preferred* over the other. This is the Tone-Clock circuit pack in carrier **A**. The intention is that the preferred circuit pack be active whenever it is healthy. Once a failing preferred Tone-Clock circuit pack has been replaced or repaired, the system will make it active as soon as possible.

Control over interchanges for an EPN is accomplished in essentially the same ways as items 1 and 3 in the PPN case above. In addition, when the non-preferred Tone-Clock circuit pack in an EPN is active, and the preferred circuit pack is repaired and proven capable of filling its roles, the system will automatically interchange back to it as soon as possible.

Software Maintenance Interchange

Interchanges may be instigated by software Tone-Clock maintenance in two ways.

1. A scheduled Tone-Clock circuit pack interchange occurs according to the parameters set by the **change system-parameters maintenance** command. This can be disabled or set to run weekly, but the standard (default) situation is for it to occur daily, at the time specified in the system-parameters list for scheduled maintenance to begin. This interchange will be blocked if the lock switches are set, if the non-preferred Tone-Clock circuit pack in an EPN has been selected with the **set tone-clock** command, if the standby Tone-Clock has been set to the busyout state, or if the clock generation capability of the standby Tone-Clock circuit pack is known to be impaired. When this scheduled interchange occurs, the standby Tone-Clock circuit pack becomes active for a period of 20 seconds to test its ability to generate clock signals, and then is returned to standby mode.
2. Unscheduled interchanges occur when on-board Tone-Clock circuit pack maintenance, or ongoing switch maintenance tests of **TONE-BD, TONE-PT**, or **TDM-CLK** uncover failures serious enough to raise any MAJOR or MINOR alarm against the active Tone-Clock circuit pack.

International Settings [G3i V2]

The TN780 Tone-Clock circuit pack uses three firmware configuration parameters for international support [G3i V2]. The following two are automatically set by the software load for the targeted country:

- The circuit pack's country-code (USA, ITALY, AUSTRALIA, etc.)
- The circuit pack's companding mode (mu-Law or A-Law)

The third configuration parameter is used only for Italy (country code: ITALY), and selects whether *new* versus *old* ISPT (Istituto Superiore Poste Telegrafi) tones will be used for dial and confirmation tones. Values for dial confirmation tone can be set independently on the **change system-parameters miscellaneous** form. Whenever such changes are made, the effects are immediately enforced on all TN780 Tone-Clock circuit packs without disrupting tone or timing services.

Italian Tone Settings (New ISPT Value)

Tone	Default	Old ISPT Value
Dial	Continuous	Cadenced
Confirmation	Cadenced	Continuous

In addition the TN780 allows customization of up to six system tones in order to meet specific country needs. These changes are made via the **change system-parameters country-options** form.

The TN2182 allows the same International changes as the TN780 but allows the customization of up to 24 system tones in order to meet specific country needs. These changes are made via the **change system-parameters country-options** form.

How to Replace a Tone-Clock Circuit Pack

Replacing the Tone-Clock circuit pack is a service-disrupting procedure on Port Networks with a single Tone-Clock, because the Tone-Clock circuit pack is always needed to generate clocks for its network. For EPN Tone-Clock replacement where no second Tone-Clock circuit pack exists, only that EPN is affected. When the circuit pack is removed, all calls are dropped immediately, the EPN enters emergency transfer within one minute, and no calls can be set up from or to that EPN. However, if the PPN Tone-Clock is removed for replacement in a Standard Reliability Option system, the System Emergency Transfer feature is activated within milliseconds, and the entire system is disrupted; no calls can be placed, and existing calls are dropped.

When replacing the Tone-Clock circuit pack, always replace it with a comparable Tone-Clock circuit pack for the system. See the following table:

System Type	Tone-Clock Circuit Pack Code
One-port network single-carrier cabinet system without High or Critical Reliability.	TN756, TN768, TN780 TN2182 [G3iV4-386]
One-port network system without High or Critical Reliability (multicarrier cabinet).	TN768, TN780
Two-port network single-carrier cabinet system without High or Critical Reliability.	TN768, TN780 TN2182 [G3iV4-386]
One- or two-port network without High or Critical Reliability.	TN768, TN780 TN2182 [G3iV4-386]

- **TN768**—This is the general purpose Tone-Clock circuit pack for port networks on a G3i switch. It can be used in every situation except as the Master Tone-Clock circuit pack when a Stratum 3 Clock is administered.
- **TN780**—The Stratum 3 Clock feature requires the use of this circuit pack code for the PPN (in both carriers of High and Critical Reliability systems). The Stratum 3 Clock will operate only with this code as the Master Tone-Clock circuit pack. The TN780 circuit pack is upward compatible with the TN768 code, and can be used in any place a TN768 would be allowed. The TN780 is used in many countries outside the U.S. where the TN768 does not provide local tones.
- **TN2182**—This Tone-Clock-Detector may be used anywhere a TN768 or TN780 is used with the exception of configurations requiring Stratum 3 Clock. The TN2182 may be used in all country configurations.

Port Networks with a Single Tone-Clock Circuit Pack

This procedure is destructive.

1. Pull out the defective Tone-Clock circuit pack. This will remove the clocks and cause the system to activate emergency measures:
   - For the PPN Tone-Clock, the system will immediately go into the Emergency Transfer state.
   - For an EPN Tone-Clock, all calls to and from the EPN will drop and the EPN will activate Emergency Transfer within about one minute, but the rest of the system should operate normally.

2. Insert a new Tone-Clock circuit pack. The system will detect the return of the clocks and will automatically recover as follows:
   - If the Tone-Clock circuit pack being replaced is in the Processor Port Network, the system will perform a **reset system 2 (system cold 2 restart)** automatically. First, all red LEDs of the PPN will come on and off wi thin 30 seconds. Then, all red LEDs of any Expansion Port Networks will come on and go off within the next 30 seconds.
   - If the Tone-Clock circuit pack being replaced is in an Expansion Port Network, the system will reset the EPN **(EPN cold restart)** and all the red LEDs of the EPN will come on and go off within 30 seconds.
3. If the red LEDs come on but do not go off within 30 seconds, pull the circuit pack out and reseat it. If the LEDs perform as expected this time, continue with step 6. Otherwise, there may be a problem with the TDM Bus; possibly a bent pin in the Tone-Clock circuit pack slot. Follow the directions in the TDM-BUS maintenance section.
4. If the red LEDs did light, as explained above, then go to Step 6. If the red LEDs do NOT light, as explained above, then go on to Step 5.
5. Restart the affected Port Network:
   - In the PPN, restart the system via the **reset system 2** command.
   - In an EPN, restart the EPN by resetting its Expansion Interface circuit pack via the **reset board** command, using the board address 1a01 for EPN1 and 1a02 for EPN2.

   If this step should fail, follow normal escalation procedures.
6. Test the new Tone-Clock circuit pack to verify that it is functioning properly, using the **test tone-clock PC long** command, and verify that the system is operational by placing several phone calls. Where possible, try calls into, out from, and within the affected Port Network.

   If the system is not operating properly, follow normal escalation procedures.

Port Networks with Two Tone-Clock Circuit Packs:

1. If both Tone-Clock circuit packs in a Port Network need to be replaced, first replace and test the one that is in standby mode. Make sure that it is healthy and active before replacing the second one. Make sure the Tone-Clock circuit pack to be replaced is in Standby Mode by displaying its status via the **status port-network** command or making sure its yellow LED is off.

   The active/standby state of a Tone-Clock circuit pack may also be determined by looking at its LED. A continuously lit red LED on the Tone-Clock circuit pack indicates a reported fault on one or more of the maintenance objects on the circuit pack. Flashing patterns of the yellow and green LEDs correspond to the following service states: **Tone-Clock LED Flashing Codes**

Condition	Tone-Clock Circuit State	Explanation
“flashing yellow” 2.7 seconds on, .3 seconds off	active	An external timing source is being used as a synchronization reference.[1]
“flashing yellow” .3 seconds on, 2.7 seconds off	active	The local oscillator on the Tone-Clock circuit pack is being used as a synchronization reference.
"yellow" on continuously	active	The circuit pack has been reset but has not been told which synchronization source to use.
"yellow" LED off	standby	The circuit pack is in standby mode, (neither generating tones nor supplying clocks).
“jingle bells” green and yellow .1 sec on, .2 sec off, .1 sec on, .4 sec off, .4 sec on, .4 sec off	standby	Maintenance software is testing the standby circuit pack (the standby Tone-Clock is providing tones).
“double blink yellow” .3 sec on, .3 sec off, .3 sec on, 2.4 sec off	active	TN2182 has lost all external references and is in holdover mode.
"other green and yellow patterns"	active	Maintenance software is testing the active circuit pack.
random yellow	standby	If the circuit pack is a TN2182, the yellow LED may come on and off intermittently as ETR-PTs on the board are used for tone detection services.

1 For a Tone-Clock in the master port network, the external source is the primary or secondary DS1 source, or a Stratum 3 clock. For a Tone-Clzteock in a slave port network, the external source is the Expansion Interface circuit pack.

2. If the Tone-Clock circuit pack to be replaced is active, then switch to the other Tone-Clock circuit pack by doing the following:

   - **set tone-clock PC**—where PC is the Standby Tone-Clock circuit pack. Since the system is designed to operate primarily on the preferred tone clock, the set tone-clock PC command should be used to make the preferred tone board active when maintenance activity is completed. There is no preferred tone clock for the PPN, but carrier A is preferred for EPNs.
   - **status system**—verify the Tone-Clock circuit pack switched to the other Tone-Clock circuit pack or check the LEDs. The yellow LED of the new Standby Tone-Clock circuit pack should be off (provided maintenance is not running on it) and the yellow LED of the active Tone-Clock circuit pack should be blinking.

- If the interchange was not successful, the standby Tone-Clock circuit pack may be defective. In particular, if the error message “must use override” is displayed, fix the standby Tone-Clock circuit pack before attempting to replace the active one.

3. If the Tone-Clock circuit pack to be replaced is in the PPN, it is recommended, but not required, that the SPE carrier containing it be locked in standby mode by executing an interchange if necessary, and locking the SPE-Select switches. This protects you from disrupting service in case of inadvertent errors in replacing the circuit pack.

   NOTE:
   If the SPE-Select switches are locked, be sure to release them at the conclusion of the replacement procedure.

4. Pull out the defective Tone-Clock circuit pack. No calls should be affected. If this is a TN2182 circuit pack, some ETR-PTs may be in use and removal of the pack will affect some individual users. It may be less disruptive to busyout the standby TN2182 before removing it.

5. Insert a new Tone-Clock circuit pack of the appropriate code in the same slot where the defective Tone-Clock circuit pack was removed.

6. Test the new Tone-Clock circuit pack via the **test tone-clock PC** command to make sure it is functioning properly. If the Tone-Clock circuit pack is being replaced due to loss of clocks, the Clock Health Inquiry (#46) will still report a failure, proceed with the next step.

7. To verify that the new Tone-Clock circuit pack is able to generate clocks for the system, switch to the new Tone-Clock circuit pack via the **set tone-clock PC override** command, and execute **test tone-clock PC**. (In a PPN, the SPE-Select switches must be in the auto position.)

   CAUTION:
   If the new Tone-Clock circuit pack is not able to generate system clocks, this procedure becomes destructive. The system will detect a loss of clock and recover accordingly.

   In this case if the Tone-Clock circuit pack being replaced is in the PPN the system will perform a reset system 2 (cold 2 restart) automatically. If the Tone-Clock circuit pack being replaced is in an EPN, the system will reset the EPN (EPN cold restart). After either type of restart, the faulty Tone-Clock circuit pack will be in standby mode. Since the replacement procedure was not successful, follow normal escalation procedures. **If the new Tone-Clock circuit pack is able to generate system clocks, there will be no system disruption.**

8. Place several phone calls.

9. After replacing a Tone-Clock circuit pack in an SPE, if the SPE lock switches were set during the procedure, they should be released. Additionally, after repairs in an EPN, the **set tone-clock PC** command should be used if required to make the preferred Tone-Clock circuit pack active.

Hardware Error Log Entries and Test to Clear Values

Table 10-654. Tone-Clock Circuit Pack Error Log Entries

Error Type	Aux Data	Associated Test	Alarm Level	On/ Off Board	Test to Clear Value
0[1]	0	Any	Any	Any	test tone-clock PC sh
1(a)	0	Circuit pack removed or SAKI Sanity Test (#53)	MINOR	ON	
18(b)	0	busyout tone-clock PC	WARNING	OFF	release tone-clock PC
23(c)	0	None	WARNING	OFF	
125(d)		None	MINOR	ON	
126(e)		None	MINOR	ON	
257	65535	Control Channel Test (#52)	MINOR	ON	test tone-clock PC r 20
257(f)	Any	None			
513(g)	Any	None			
769(h)	4358	None			
1025(i)	4363	NPE Audit Test (50)			test tone-clock PC sh
1538(j)	Any	None	MINOR	ON	
2049(k)	0	Clock Health Inquiry Test (#46)	MAJOR	ON	set tone-clock PC override
2305(k)	0	Clock Health Inquiry Test (#46)	MAJOR	ON	set tone-clock PC override
2561(l)	Any	None	MAJOR	ON	
3329 (m)	0	None	MINOR/ WARNING[2]	OFF	set tone-clock PC
3840(n)	Any	None			
3848(o)	0	Clock Health Inquiry Test (#46)			set tone-clock PC override
3872(p)	0	None			set tone-clock PC override
3999 (q)	Any	None			

1 Run the Short Test Sequence first. If all tests pass, run the Long Test Sequence. Refer to the appropriate test description and follow the recommended procedures.

2 Minor alarms on this MO may be downgraded to Warning alarms based on the value used in the **set options** command.

Notes:

a. Error Type 1—This error indicates the circuit pack totally stopped functioning or it was physically removed from the system.

NOTE:
The alarm is logged approximately 11 minutes after the circuit pack is removed/SAKI Sanity Test (#53) fails.

If the circuit pack is not present in the system, insert a circuit pack in the slot indicated by the error to resolve the error.

If the circuit pack is present in the system, it is faulty and must be replaced. See the preceding section, "How to Replace a Tone-Clock Circuit Pack".

If the faulty circuit pack is in standby mode, a MINOR alarm is raised, but no other system action is taken. If the circuit pack is the active Tone-Clock, further effects of this error depend on the Reliability Option for the switch.

Table 10-655. Effect of Error Type 1 on an Active Tone-Clock Circuit Pack

	Location of Tone-Clock Circuit Pack	
Reliability Option	**PPN**	**EPN**
Standard	System Emergency Transfer (entire system affected)	Emergency Transfer in the affected EPN
High	Interchange to standby Tone-Clock in the PPN	Emergency Transfer in the affected EPN
Critical	Interchange to standby Tone-Clock in the PPN	Interchange to standby Tone-Clock in the affected EPN

If an interchange is attempted and the system is unable to activate the standby Tone-Clock, Emergency Transfer is activated. If the problem is in the PPN the entire system is affected. Otherwise only the EPN in question is affected. When this happens, both circuit packs are faulty and must be replaced. See the preceding section, "How to Replace a Tone-Clock Circuit Pack".

If a successful interchange occurs in response to a failure of the active Tone-Clock, or if a standby Tone-Clock fails, the faulty Tone-Clock should be replaced.

b. Error Type 18—The indicated Tone-Clock circuit pack has been made unavailable via the **busyout tone-clock PC** command. This error applies only to High or Critical Reliability systems (an active Tone-Clock may not be busied out). To resolve this error, execute **release tone-clock PC**.

c. Error Type 23—The circuit pack has been logically administered but not physically installed. Installing the circuit pack will resolve the alarm.

d. Error Type 125—A wrong circuit pack is inserted in the slot where this circuit pack is logically administered. To resolve this problem, either remove the wrong circuit pack and insert the logically administered circuit pack OR use the **change circuit-pack** command to readminister this slot to match the circuit pack inserted.

e. Error Type 126—The port network specified in the PORT field of the error log entry booted up without a Tone-Clock circuit pack, or with a one that cannot communicate at all with the system. The error is logged five minutes after the port network is restarted. If no circuit pack is present, install one of the proper code. If there is a circuit pack present, replace it. See the preceding section, "How to Replace a Tone-Clock Circuit Pack". If replacement does not solve the problem, follow normal escalation procedures.

f. Error Type 257—This error indicates transient communication problems with this circuit pack . This error is not service-affecting and no action is required.

g. Error Type 513—This circuit pack has an on-board hardware failure. Replace the circuit pack using the procedure described in preceding section, "How to Replace a Tone-Clock Circuit Pack".

h. Error Type 769—This error can be ignored, but look for other errors on this circuit pack.

i. Error Type 1025—This error is not service-affecting and no action is required.

j. Error Type 1538—The circuit pack was taken out of service because of an excessive rate of uplink messages. Use **test tone-clock PC long** to reset the circuit pack and put it back into service. If the command is not successful, replace the circuit pack using the procedure described in the preceding section, "How to Replace a Tone-Clock Circuit Pack". If the alarmed circuit pack is the active Tone-Clock of a duplicated pair, first interchange Tone-Clocks via the **set tone-clock PC** command to avoid a service outage. If the error occurs again within 15 minutes, follow normal escalation procedures.

k. Error Type 2049 or 2305—These errors indicate the loss of one or more clock signals from the reported Tone-Clock circuit pack, which was active at the time of the error. The effect of any of these errors is described in the table for error type 1. Diagnosis of the problem is the same for all four error types, with the exception noted below.

    1. Examine the Hardware Error Log for errors reported against circuit packs in the same Port Network, especially TDM-CLK, TONE-BD, DUPINT, SW-CTL, and EXP-INTF. Follow the repair or replacement procedures indicated for any such errors found.

2. If the error is not corrected by resolving errors found in step 1, the Tone-Clock circuit pack should be replaced. See the preceding section, ‘‘How to Replace a Tone-Clock Circuit Pack’’.

   NOTE:
   Replacing the circuit pack and retesting it with the **test tone-clock** command is not adequate to retire this alarm and return the Tone-Clock Circuit Pack to full service; the Clock Health Inquiry test (#46) will continue to fail. Because the ability to generate clocks was considered lost, once any repairs have been made it is necessary to execute the **set tone-clock PC override** command, forcing the circuit pack to become active. If the problem has not actually been corrected, this action may cause a disruption in service for active digital facilities users.

3. If error 2305 or 3848 persists, all clock signals from the indicated board were lost. If the reported Tone-Clock circuit pack is in a Port Network with duplicated Tone-Clocks, the problem may lie with the circuit pack responsible for selecting the active Tone-Clock circuit pack (the *t/c selector*).

   - For a PPN, the t/c selector is the DUPINT circuit pack on carrier A.
   - For an EPN, the t/c selector is the active EXP-INTF circuit pack that is connected to the PPN. This is EXP-INTF 2A01 or 2B02 for EPN1 and 3A01 or 3B02 for EPN2.

   The t/c selector circuit pack of interest is the one which was active at the time the error was logged. This is the currently active t/c selector unless there has been an SPE interchange for PPN problem, or an EXP-INTF link switch for EPN problem, In order to determine whether an interchange has occurred since the TONE-BD error, examine the **display initcauses** log for SPE interchanges, and EXP-LNK entries in the hardware error log for expansion link interchanges.

   If the t/c selector circuit pack was not replaced as part of the previous step, replace it now. Follow procedures described in ‘‘Replacing Defective SPE Circuit Packs’’ in Chapter 6, ‘‘Reliability Systems: A Maintenance Aid’’ for the DUPINT circuit pack, or in the EXP-INTF section of this chapter for the Expansion Interface.

4. If the error has not been corrected at this point, there is a problem with the TDM Bus within the Port Network containing the reported Tone-Clock circuit pack. This may include TDM Bus intercarrier cables, Bus terminators, bent pins on the backplane, and errors on any circuit pack plugged into the same Port Network. Refer to the TDM-BUS section.

5. If the problem persists, follow normal escalation procedures.

l. Error Type 2561—This error indicates that a Tone-Clock circuit pack, with a different circuit pack code as required for this system, has been inserted in the port slot as shown in the Hardware Error Log. To resolve this error, refer to the "How to Replace a Tone-Clock Circuit Pack" section for an appropriate circuit pack code and replace the Tone-Clock circuit pack according to the procedures indicated for this system. The meanings of the aux data values are as follows:

1001	A TN756 Tone-Clock circuit pack is in the PPN of a one port network system without High or Critical Reliability (Multicarrier Cabinet).
1002	A TN756 Tone-Clock circuit pack is in the EPN of a one port network system without High or Critical Reliability (Multicarrier Cabinet).
1003	Either a TN741 or TN714 Tone-Clock circuit pack (instead of a TN768, TN780 or TN2182) is in a one port network system without High or Critical Reliability (Multicarrier Cabinet).
1004	Either a TN741 or TN714 Tone-Clock circuit pack (instead of a TN768, TN780 or TN2182) is in a High or Critical Reliability system.
1005	Same as for aux value 1004.

m. Error Type 3329—The system attempted but failed to interchange Tone-Clock circuit packs. (This error occurs only in Port Networks with duplicated Tone-Clocks.) The fault may lie in the standby Tone-Clock or in the circuit pack that controls selection of the active Tone-Clock (the *t/c selector*). The goal of the following procedure is to ensure that both Tone-Clocks can be interchanged into while either t/c-selector circuit pack is active.

1. Examine the Error Log for errors reported against circuit packs in the same Port Network, paying special attention to TDM-CLK, TONE-BD, DUPINT, SW-CTL, and EXP-INTF. Follow the procedures indicated for any such errors found. After eliminating the above potential problem sources, proceed with the following steps.

2. Determine which circuit pack was controlling the choice of Tone-Clock at the time the error occurred.

   - For a PPN, the t/c selector is the DUPINT circuit pack on the A-carrier.
   - For an EPN, the t/c selector is the active EXP-INTF circuit pack that is connected to the PPN. This is EXP-INTF 2A01 or 2B02 for EPN1 and 3A01 or 3B02 for EPN2.

   The t/c-selector circuit pack of interest is the one which was active at the time the error was logged. An EXP-LNK interchange since the time of the error may have made that circuit pack the current standby. Determine whether an interchange affecting the t/c selector has occurred since the TONE-BD error. When investigation an EPN Tone-Clock, look for EXP-LNK entries in the hardware error log for PNC interchanges, which would affect the EXP-INTF.

3. If the t/c selector has not undergone an interchange since the error occurred, go to the next step. If such an interchange has taken place, interchange back to the formerly active t/c selector. Use the **set expansion-interface** command when investigating an EPN Tone-Clock.) If the interchange attempt fails due to other errors, resolve those problems first.
4. Interchange the Tone-Clock circuit packs using the **set tone-clock PC** command. If the command succeeds, the interchange which previously failed has been accomplished and the problem has been satisfactorily resolved. If it fails, proceed to the next step. (You may want to proceed in any case to definitively test all relevant components.)
5. Interchange the t/c selector using **set expansion-interface** if investigating an EPN. If errors prevent this interchange, resolve them first.
6. Attempt again to interchange Tone-Clocks with the **set tone-clock PC** command.

   — If the Tone-Clock interchange failed for both t/c selectors:

   Replace the standby Tone-Clock circuit pack which could not be interchanged into and return to this step. (See ‘‘How to Replace a Tone-Clock Circuit Pack’’.) Test the new circuit pack as follows:

   a. Execute the set tone-clock PC command.

   b. Execute a set expansion-interface, if this is an EPN Tone-Clock.

   c. Execute the set tone-clock PC command again.

   If these commands successfully complete, the problem has been resolved.

   — If these commands successfully complete, the problem has been resolved.

   — If the Tone-Clock circuit packs successfully interchange when one EXP-INTF is active, but not when the other one is:

   The t/c-selector circuit pack on the failing side is suspect.

   a. Replace the A carrier DUPINT or EXP-INTF board that is active when the Tone-Clock interchange fails. (Follow procedures in ‘‘Replacing Defective SPE Circuit Packs’’ in Chapter 6, ‘‘Reliability Systems: A Maintenance Aid’’ for the DUPINT circuit pack; for the Expansion Interface, see EXP-INTF.)

   b. Make sure the new t/c selector is active and execute the set tone-clock PC command.

— If both Tone-Clocks can be interchanged into, and interchanges succeed when either t/c selector is active, the problem has been resolved. If the problem persists after following the above steps, follow normal escalation procedures.

n. Error Type 3840—This error is not service-affecting and can be ignored. It indicates that the circuit pack has received a bad control message from the switch.

o. Error Type 3848—This error indicates that the Tone/Clock circuit pack had a loss of clock. If error 2305 is also logged, see note (j).

p. Error Type 3872—These errors indicate this Tone/Clock circuit pack had a loss of Data Clocks. This error will impact mainly users on station connected to Digital circuit packs. These users could be with out service. If error 2049 is also logged see note (i).

q. Error type 3999 indicates that the circuit pack sent a large number of control channel messages to the switch within a short period of time. If error type 1538 is also present, then the circuit pack was taken out-of-service due to hyperactivity. If error type 1538 is not present, then the circuit pack has not been taken out-of-service, but it has generated 50% of the messages necessary to be considered hyperactive. This may be completely normal during heavy traffic periods. However, if this error type is logged when the circuit pack is being lightly used, it may indicate a problem with the circuit pack or the equipment attached to it.

System Technician-Demanded Tests: Descriptions and Error Codes

Always investigate tests in the order presented in the following tables when inspecting errors in the system. By clearing error codes associated with the *SAKI Sanity Test*, for example, you may also clear errors generated from other tests in the testing sequence.

Use the **list configuration control** command to find the Tone-Clock Circuit Pack Code of the system. Look for the Short and Long Test Sequences according to the Tone-Clock Circuit Pack Code.

For a system with a TN756 Tone-Clock Circuit Pack:

Order of Investigation	Short Test Sequence	Long Test Sequence	D/ND[1]
SAKI Sanity Test (#53) (a)		X	D
Clock Health Inquiry Test (#46)	X	X	ND
Control Channel Loop Around Test (#52) (a)	X	X	ND
Tone Detection Verification Test (#42) (b)	X	X	ND
Tone Detection Audit/Update Test (#43) (b)	X	X	ND
Tone Generator Crosstalk Test (#90) (b)		X	ND
Tone Generator Transmission Test (#40) (b)	X	X	ND
Tone Generator Audit/Update (#41) (b)	X	X	ND

1 D = Destructive; ND = Nondestructive

a. Refer to XXX-BD (Common Port Circuit Pack) documentation for descriptions of these tests.

b. Refer to TONE-PT (Tone Generator) documentation for descriptions of these tests.

For a system with a TN768, TN780 or TN2182 Tone-Clock Circuit Pack:

Order of Investigation	Short Test Sequence	Long Test Sequence	D/ ND[1]
SAKI Reset Test (#53) (a)		X	
Clock Health Inquiry Test (#46)	X	X	
Control Channel Loop Around Test (#52) (a)	X	X	
Tone Generator Crosstalk Test (#90) (b)		X	
Tone Generator Transmission Test (#40) (b)	X	X	
Tone Generator Audit/Update (#41) (b)	X	X	
TDM Bus Clock Circuit Status Inquiry Test (#148) (c)	X	X	
TDM Bus Clock Slip Inquiry (#149) (c) (e)	X	X	
TDM Bus Clock PPM Inquiry Test (#150) (c)	X	X	
TDM Bus Clock Parameter Update Test (#151) (c)	X	X	
Board Type Check Test (#574) (c)	X	X	
Standby Reference Health Check Test (#651) (c,d)		X	

1 D = Destructive; ND = Nondestructive

Notes:

a. Refer to XXX-BD for descriptions of these tests.

b. Refer to TONE-PT for descriptions of these tests.

c. Refer to TDM-CLK for descriptions of these tests.

d. This test runs only on the standby Tone-Clock circuit pack in a Port Network with duplicated Tone-Clocks (High or Critical Reliability systems). The circuit pack must be a TN780 with firmware version 2 or above or a TN2182.

Clock Health Inquiry Test (#46)

This inquiry reads special data stored in memory to determine if this Tone-Clock circuit pack had a loss of any of three clock types:

- SYSCLK
- SYSFM
- SYSDCLK

If this data indicates this Tone-Clock circuit pack had a loss of any of these clocks, the inquiry reports FAIL. In addition, if TDM-CLK error 1 is at threshold, this test will FAIL. TDM-CLK error 1 indicates a suspect clock is at the edge of its specified frequency. If the circuit pack did not have a loss of clock or TDM-CLK error 1 at threshold, the inquiry reports PASS.

This is not really a test, in the sense that it simply reports status held by the system, and does not generate new information or raise alarms. If this test fails with no error code, there is at least one Major alarm against a Tone-Clock circuit pack. If this test fails with an error code of 1, there is at least one Minor off-board alarm against a TDM-CLK.

Table 10-656. TEST #46 Clock Health Inquiry Test

Error Code	Test Result	Description/Recommendation
	ABORT	Internal System Error. 1. Retry the command at 11-minute intervals for a maximum of 5 times. 2. If the test continues to abort, follow normal escalation procedures.
none	FAIL	This Tone-Clock circuit pack had an apparent loss of clock. One or more of error types 2049, 2305, 3834, and 3872 will appear in the error log. Correct the problem according to the appropriate error log entries. Once this test fails, the only way to make it pass, and to retire the associated alarm, is to repair the problem and to execute **set tone-clock PC override** against the indicated Tone-Clock circuit pack. **NOTE:** If power is removed from a carrier in a duplicated system, and that SPE has the active TONE-CLK, a MAJOR alarm is raised for the TONE-BD. The TONE-BD will be out of service and when running Test 46 (Clock Health Test) it will fail, indicating a loss of any of these three clocks, SYSCLK, SYSFM, and SYSDCLK. To restore the TONE-BD to service, use **set tone spe health-override** .
1	FAIL	This Tone-Clock circuit pack is suspect of having a clock at the edge of its specified frequency. A Tone-Clock circuit pack with this problem can cause Expansion Interface circuit packs to go out-of-frame or report no neighbor conditions, thus causing EPNs to go down 1. Replace the Tone-Clock circuit pack identified in the error log. Refer to the "How to Replace a Tone-Clock Circuit Pack" section. 2. If the error persists, follow normal escalation procedures.
	PASS	This Tone-Clock circuit pack has not reported a loss of clock.

TONE-PT (Tone Generator)

MO Name (in Alarm Log)	Alarm Level	Initial Command to Run	Full Name of MO
TONE-PT	MAJOR	test tone-clock PC sh	Tone Generator
TONE-PT	MINOR	test tone-clock PC sh	Tone Generator
TONE-PT	WARNING	release tone-clock PC sh	Tone Generator

NOTE:
Replacing the tone/clock circuit pack requires a special procedure which is described in the documentation for TONE-BD. That section also describes the LED display for this board.

The tone generator resides on the Tone/Clock circuit pack and provides all system tones such as dial tone, busy tone, and so on. If an active tone generator fails, its port network may not have tones (see the Tone Generator Transmission Test #40). For instance, a user may go off-hook and hear no dial tone. This problem will affect only users on the same port network in which the faulty Tone-Clock circuit pack resides. The system will be able to process certain type of calls (that is, internal calls will succeed while outgoing calls will not).

The Tone-Clock circuit pack also provides the clocks for the system and can serve as the synchronization reference. Therefore, when resolving alarms on the Tone-Clock circuit pack, the TDM-CLK (TDM Bus Clock) and SYNC (Synchronization) Maintenance documentation should be utilized as well as the TONE-BD (Tone-Clock Circuit Pack) Maintenance documentation.

See the section on TONE-BD Maintenance in this manual for a discussion of the relationship of Tone-Clock circuit packs with the various Reliability Options.

Hardware Error Log Entries and Test to Clear Values

Tone Generator Error Log Entries

Error Type	Aux Data	Associated Test	Alarm Level	On/Off Board	Test to Clear Value
0[1]	0	Any	Any	Any	test tone-clock PC r 1
1(a)	17664	Tone Generator Audit/ Update Test (#41)	MAJOR/ MINOR	ON	test tone-clock PC r 2
18(b)	0	busyout tone-clock PC	WARNING	OFF	release tone-clock PC
130(c)		None	MINOR	ON	test tone-clock PC Sh
257(d,f)	17667	None	MINOR	ON	
513(e,f)	17666	Tone Generator Audit/ Update Test (#41)	MINOR	ON	test tone-clock PC r 3
769	Any	Transmission Test (#40)	MAJOR/ MINOR	ON	test tone-clock PC r 3
1025		Crosstalk Test (#90)	MAJOR/ MINOR	ON	test tone-clock PC l r 2
1281(g)	Any	Tone Generator Audit/ Update Test (#41)	MINOR	ON	test tone-clock PC r 3

1 Run the Short Test Sequence first. If all tests pass, run the Long Test Sequence. Refer to the appropriate test description and follow the recommended procedures.

Notes:

a. A failure in the tone generation facility on the indicated circuit pack has been detected. Replace the circuit pack. See "How to Replace a Tone-Clock Circuit Pack" in the TONE-BD section.

b. The indicated Tone-Clock circuit pack has been made unavailable via the **busyout tone-clock PC** command. It only applies to systems which have the High or Critical Reliability Option administered, because only a standby Tone-Clock circuit pack may be made busy by that command. To resolve this error, execute the **release tone-clock PC** command for the alarmed circuit pack.

c. This error type indicates that the circuit pack has been removed or has been insane for more than 11 minutes. To clear the error, reinsert or replace the circuit pack.

d. The tone generation facility is having problems verifying that tones have been connected as requested.

e. The tone generation facility may or may not be able to generate tones.

f. Infrequent errors, at a rate which does not bring up an alarm, probably do not affect service, unless there are customer complaints of no tones, or incorrect tones which can not be explained in any other way. However, if an alarm is raised because this error is being repeatedly logged, then the circuit pack should be replaced. See "How to Replace a Tone-Clock Circuit Pack" in the TONE-BD section.

g. The system-parameters country-options administration are setup such that a TN780 or TN2182 are required and the existing tone-clock circuit pack will not provide the needed functionality. The Base Tone Generation Set on page 1 or the custom tones beginning on page 2 of the system-parameters country options form may have values not supported by the existing tone-clock.

   This error (1281) indicates that the system parameters country-options form has custom tones translated and that the alarmed tone board does not support the customized tones. TN768 tone boards do not support any customized tones. TN780 tone boards support up to 6 customized tones using the following frequencies/levels only:

   Silence

   350Hz at 17.25 dB

   425Hz at 4.0 dB

   425Hz at 11.0 dB

   425Hz at 17.25 dB

   440Hz at 17.25 dB

   350Hz+425Hz at 4.0 dB

   350Hz+440Hz at 13.75 dB

   480Hz at 17.25 dB

   620Hz at 17.25 dB

   440Hz+480Hz at 19.0 dB

   404Hz at 11.0 dB

   404Hz at 16.0 dB

   480Hz+620Hz at 24.0 dB

   404Hz+425Hz at 11.0 dB

   375Hz+425Hz at 15.0 dB

   404Hz+450Hz at 11.0 dB

   1000Hz at 0.0 dB

   1000Hz at +3.0 dB

   525Hz at 11.0 dB

   1400Hz at 11.0 dB

System Technician-Demanded Tests: Descriptions and Error Codes

Always investigate tests in the order presented in the following tables when inspecting errors in the system. By clearing error codes associated with the *SAKI Sanity Test*, for example, you may also clear errors generated from other tests in the testing sequence.

Use the **list configuration control** command to find the Tone-Clock Circuit Pack Code of the system. Then look for the Short and Long Test Sequences according to the Tone-Clock Circuit Pack Code.

For a system with a TN756 Tone-Clock Circuit Pack

Order of Investigation	Short Test Sequence	Long Test Sequence	D/ND[1]
SAKI Sanity Test (#53) (a)		X	D
Clock Health Inquiry Test (#46) (b)	X	X	ND
Control Channel Loop Around Test (#52) (a)	X	X	ND
Tone Detection Verification Test (#42) (c)	X	X	ND
Tone Detector Audit/Update Test (#43) (c)	X	X	ND
Tone Generator Crosstalk Test (#90)		X	ND
Tone Generator Transmission Test (#40)	X	X	ND
Tone Generator Audit/Update Test (#41)	X	X	ND

1 D = Destructive; ND = Nondestructive

Notes:

a. Refer to XXX-BD (Common Port Circuit Pack) Maintenance documentation for descriptions of these tests.

b. Refer to TONE-BD (Tone-Clock Circuit Pack) Maintenance documentation for descriptions of these tests.

c. Refer to Dual Tone Multifrequency Receiver Port (TTR) (DTMR-PT) or General Purpose Tone Detector (CPTR) (GPTD-PT) Maintenance documentation for descriptions of this test.

For a system with a TN768, TN780 or TN2182 Tone-Clock Circuit Pack:

Order of Investigation	Short Test Sequence	Long Test Sequence	D/ ND[1]
SAKI Reset Test (#53) (a)		X	D
Clock Health Test (#46) (b)	X	X	ND
Control Channel Loop Around Test (#52) (a)	X	X	ND
Tone Generator Crosstalk Test (#90)		X	ND
Tone Generator Transmission Test (#40)	X	X	ND
Tone Generator Audit/Update Test (#41)	X	X	ND
TDM Bus Clock Circuit Status Inquiry Test (#148) (c)	X	X	ND
TDM Bus Clock Slip Inquiry Test (#149)(e)(c)	X	X	ND
TDM Bus Clock PPM Inquiry Test (#150) (c)	X	X	ND
TDM Bus Clock Parameter Update Test (#151) (c)	X	X	
Board Type Check Test (#574) (c)	X	X	
Standby Reference Health Check Test (#651) (c,d)		X	

1 D = Destructive; ND = Nondestructive

Notes:

a. Refer to XXX-BD (Common Port Circuit Pack) Maintenance documentation for descriptions of these tests.

b. Refer to TONE-BD (Tone-Clock Circuit Pack) section for descriptions of these tests.

c. Refer to TDM-CLK (TDM Bus Clock) section for descriptions of these tests.

d. This test only runs on the Standby Tone-Clock circuit pack in a Port Network with more than one Tone-Clock circuit pack (High or Critical Reliability Option). The circuit pack must be a TN780 code with firmware revision 2 or above, or a TN2182.

Tone Generator Transmission Test (#40)

The purpose of this test is to verify that the tone generation hardware on the tone-clock circuit pack is capable of generating a subset of system tones and a set of test tones. This test does not verify all system tones the tone generator produces during normal system operation.

The test is performed in two parts. For the first part, the Tone Generator is told to generate the touch-tone digits. The digits are received and checked by a Tone Detector touch-tone detector. If any of the digits fail, the test is repeated using a touch-tone detector in another Tone Detector circuit pack.

For the second part, the Tone Generator is told to generate call progress tones that are detected and identified by a tone detector. These tones are:

- 440 Hz
- 2225 Hz
- Digital Count

The tone generator is then told to generate a sequence of test tones whose output levels are measured by a tone detector. These tones are:

- 404 Hz at 0 dB
- 1004 Hz at -16 dB
- 1004 Hz at 0 dB
- 2804 Hz at 0 dB

A Tone Detector general purpose tone detector listens for the tones and measures the quality of the tone. If any of the measured values are not within limits, the test is repeated using a general purpose tone detector in a different Tone Detector circuit pack. If the values are still out of the limits, the test will fail.

For all the failure cases of Test #40, do the following:

1. Check that all Tone Detector circuit packs have the same companding mode as that administered for the system. Correct the situation if there is a mismatch.
2. Run the long test sequence: **test tone-clock PC long repeat 1**.
3. If the problem persists, replace the Tone-Clock circuit pack by following the steps outlined in the ''How to Replace a Tone-Clock Circuit Pack'' section.

Table 10-657. TEST #40 Tone Generator Transmission Test

Error Code	Test Result	Description/Recommendation
None	ABORT	The system was not able to allocate all the resources needed for this test or there was an Internal System Error.
1	ABORT	The system could not allocate all the resources needed to test the DTMF tones.
1001	ABORT	The system was not able to put the tone generation facility in the appropriate mode to test it.
1002	ABORT	The system could not allocate time slots for the test connection. This can happen when the system is heavily loaded. If the system is not heavily loaded, then test the TDM Bus via **test tdm port-network PN#** . Refer to TDM-BUS section for details. 1. Retry the command at 1-minute intervals a maximum of 5 times. 2. If the test continues to abort, follow normal escalation procedures.
1003	ABORT	The system could not allocate a tone receiver for the test connection. This can happen when the system is heavily loaded or there is not a Tone Detector circuit pack in the port network where this test is being executed. 1. Make sure there is a Tone Detector circuit pack in the same port network. 2. If a Tone Detector circuit pack is missing, install one in the same port network. 3. Allow approximately 1 minute for Tone Detector maintenance to run on the newly inserted Tone Detector circuit pack. 4. Retry the command at 1-minute intervals a maximum of 5 times. 5. If the test continues to abort, follow normal escalation procedures.

Continued on next page

Table 10-657. TEST #40 Tone Generator Transmission Test — *Continued*

Error Code	Test Result	Description/Recommendation
1022	ABORT	[G3r V2] Tone detection for the system is administered as wide broadband (tone detection mode 5), and the Tone Detector used for this test was not a TN420C or TN2182 (the only circuit packs with this capability). GPTD ports on other types of Tone Detector circuit packs are taken out of service since they cannot provide the administered function. 1. Change the tone-detection mode administered on the system-parameters country-options form Or 2. Remove all non-TN420C and non-TN2182 circuit packs from the system.
2000	ABORT	Response to the test request was not received within the allowable time period. System resources required for this test are not available. 1. Retry the command at 1-minute intervals a maximum of 5 times. 2. If the test continues to abort, follow normal escalation procedures.
2100	ABORT	System resources required for this test are not available. 1. Retry the command at 1-minute intervals a maximum of 5 times. 2. If the test continues to abort, follow normal escalation procedures.
1 (a)	FAIL	DTMF generation failed for the active tone generator.
105 (a)	FAIL	Generation of 440-Hz failed.
109 (a)	FAIL	Generation of 2225-Hz failed.
110 (b)	FAIL	Generation of 404-Hz level invalid.
111 (b)	FAIL	Generation of 1004-Hz low level invalid.
112 (b)	FAIL	Generation of 1004-Hz high level invalid.
113 (b)	FAIL	Generation of 2804-Hz level invalid.
115 (b,c)	FAIL	Generation of digital count sequence invalid.
120 (a)	FAIL	Generation of quiet tone failed.
1044 (a)	FAIL	DTMF generation failed to generate Digit 1 for the standby tone generator.

Continued on next page

Table 10-657. TEST #40 Tone Generator Transmission Test — *Continued*

Error Code	Test Result	Description/Recommendation
1045 (a)	FAIL	DTMF generation failed to generate Digit 5 for the standby tone generator.
1046 (a)	FAIL	DTMF generation failed to generate Digit 9 for the standby tone generator.
1047 (a)	FAIL	DTMF generation failed to generate Digit D for the standby tone generator.
	PASS	The tone generation facility is able to generate and transmit all the tones.

Notes:

Except in Port Networks containing more than one Tone-Clock circuit pack, replacing the circuit pack is a service disrupting procedure. The test should be run several times with more than one failure before the replacement policy specified in the following notes is executed. Use the procedure described in ''How to Replace a Tone-Clock Circuit Pack'' in the TONE-BD section.

a. All the failure error codes marked with (a) may affect users if the failure is on the active tone generator. When this type failure is detected, the system will attempt to move the tone generation function to the alternate Tone-Clock circuit pack, if one is present in the affected Port Network. When the tone generation facility fails in this way, especially in a Port Network without duplicated Tone-Clock circuit packs, the faulty Tone-Clock should be replaced promptly.

b. All the failure error codes marked with (b) are almost transparent to the user. Again, when this type failure is detected, the system will attempt to move the tone generation function to the alternate Tone-Clock circuit pack, if one is present in the affected Port Network. Users may or may not hear any noisy tones. This type of failure affects maintenance on other objects. Maintenance may not be able to run on other objects which use the tone generation facility (that is, Tone Detector Circuit Pack maintenance). In this case, the Tone-Clock circuit pack can be replaced as suitable to the customer.

c. Error code 115 may also be caused by TDM Bus corruption. This normally means a physical problem with bent backplane pins, TDM/LAN Bus cabling, or TDM/LAN Bus terminators. Such physical problems should especially be suspected if board replacement or other physical activity has occurred just before this error is observed.

Use **display errors** to look for errors on other circuit packs in the carriers of the same Port Network as the indicated Tone-Clock. If any are found, they should be resolved if possible, and the Tone-Clock circuit pack retested. If this does not clear the problem, the Tone-Clock circuit pack should be replaced and the new one tested. If the problem persists, follow instructions for TDM Bus maintenance in this manual.

Tone Generator Update/Audit Test (#41)

The active tone generation facility is refreshed with all the time slot tone information. This test also triggers in-line error messages the Tone-Clock circuit pack generates when it detects problems by itself.

A check is also made between the type of tone-clock being tested and the type of tone-clock needed based on system administration. The administration on the system-parameters country-options form may imply that a TN780 or TN2182 is required.

Table 10-658. TEST #41 Tone Generator Update/Audit Test

Error Code	Test Result	Description/Recommendation
none	ABORT	The system was not able to allocate all the resources needed for this test.
2100	ABORT	System resources required for this test are not available.
1	FAIL	The system requires a TN780 TN2182 tone-clocks to support the currently administered country-options tone generation parameters. 1. Check the administration on the system-parameters country-option form. Specifically, the Base Tone Generation Set on page 1 and any custom tone administration beginning on page 2. 2. Replace existing tone-clock circuit packs with a TN780 or TN2182.

Continued on next page

Table 10-658. TEST #41 Tone Generator Update/Audit Test — *Continued*

Error Code	Test Result	Description/Recommendation
2	FAIL	The system requires TN2182 tone-clocks to support the currently administered country-options tone generation parameters. 1. Check the administration on the system-parameters country-option form. Specifically, the Base Tone Generation Set on page 1 and any custom tone administration beginning on page 2. 2. Replace existing tone-clock circuit packs with TN2182s.
	PASS	The tone generation facility has been successfully refreshed with its time-slot translation and system administration is consistent with this type of tone-clock. 1. Display the Hardware Error Log via **display errors** to make sure this circuit pack did not generate new errors. 2. If errors persist, follow normal escalation procedures.

Tone Generator Crosstalk Test (#90)

This test checks the ability of the Tone Generator to talk on a specific time slot. The tone generator is told to talk on a specific time slot. The other idle time slots are checked to make sure the Tone Generator put the tone on only the specified time slot.

Table 10-659. TEST #90 Tone Generator Crosstalk Test

Error Code	Test Result	Description/Recommendation
None	ABORT	Internal System Error 1. Retry the command at 1-minute intervals a maximum of 5 times. 2. If the test continues to abort, follow normal escalation procedures.
1001	ABORT	The system was not able to put the tone generation facility in the appropriate mode to test it.
1002	ABORT	The system could not allocate time slots for the test connection. This can happen when the system is heavily loaded. If the system is not heavily loaded, then test the TDM-BUS via **test tdm port-network PN#** . Refer to TDM-BUS section for details.
2000	ABORT	Response to the test request was not received within the allowable time period.
2100	ABORT	Could not allocate the necessary system resources to run this test. 1. Retry the command at 1-minute intervals a maximum of 5 times. 2. If the test continues to abort, follow normal escalation procedures.
	FAIL	The Tone Generator could be defective. In a Port Network with more than one Tone-Clock circuit pack, the system will attempt to move the tone generation function to the alternate one. 1. Test the Tone-Clock circuit pack again via **test tone-clock PC**. 2. If the test fails again, look at the Hardware Error Log for Tone Detector circuit pack errors. 3. If there are Tone Detector circuit pack errors, refer to Tone Detector Maintenance documentation (DTMR-PT, GPTD-PT, CLAS-PT, ETR-PT) to resolve these errors first. 4. If there are no Tone Detector circuit pack errors, then the Tone-Clock circuit pack should be replaced. See "How to Replace a Tone-Clock Circuit Pack".
	PASS	The tone generation facility is able to put tones out.

TRANS-ID (Translation-ID)

MO Name (in Alarm Log)	Alarm Level	Initial Command to Run	Full Name of MO
TRANS-ID	MAJOR	N/A	Translation-ID

Both the system processor and the PCMCIA translation card have matching ID numbers. When the system detects a mismatch between the two numbers, the system:

- raises a MAJOR off-board alarm (TRANS-ID) against ports 01A or 01B.
- displays the warning: `TRANS-ID INTERVAL EXPIRATION: x days; call Avaya distributor immediately.` x days is the grace period during which only Avaya Services logins can save translations.
- disables the add, change, remove, and duplicate commands if the translation ID is not reset prior to the expiration of the grace period (**reset translation-id** -- Avaya Services login required)

For information about changing the grace period, see ''Changing the grace period interval''.

Clearing the alarm

- Use the **reset system 3** command with the translation card that matches the processor(s) in place to resolve the condition.
- Otherwise, contact authorized Avaya Services personnel or distributor immediately. They can reset the translation ID (**reset translation-id**).

NOTE:
Duplicated systems raise separate MAJOR, off-board TRANS-ID alarms against SPE A (01A) or SPE B (01B).

Error Log Entries and Test to Clear Values

Error Type	Aux Data	Associated Test	Alarm Level	On/Off Board	Test to Clear Value
Any	None	N/A	MAJOR	OFF	Reset the system (**reset system 3**) with matching translation and processor(s). Contact authorized Avaya personnel to execute **reset translation-id** (requires Avaya Services login).

Processor circuit pack replacement

When replacing a processor circuit pack, follow the procedures in Table 10-660:

- Standard Reliability:
  - — Begin the procedure with *Step #3*.
- High and Critical Reliability:
  - — Follow the procedure through once. Work on the standby side first, then on the active side.

NOTE:
Translations loaded from a duplicated system flash card into a simplex system, even where one of the translation IDs on the flash card corresponds to the ID on the processor, results in translation ID mismatch.

Table 10-660. Processor circuit pack replacement procedure

√	Step	Description	Command	Procedure
	1.	Suppress alarms	**change system-parameters maintenance**	Change the `Alarm Origination to OSS Numbers` field to **neither** (Screen -1816). Press Enter to effect the changes.
	2.	Busyout the standby PPN	**busyout standby-spe**	
	3.	Remove the old processor circuit pack		Unlatch the old processor circuit pack and slide it out of its slot (no power-down required).
	4.	Replace the processor **NOTE:** If you replace the Processor circuit pack, you need to get a new license file.		Slide the replacement processor circuit pack in the slot and latch securely.
	5.	System detects ID mismatch		The system detects the translation ID mismatch, displays the warning message, and generates a MAJOR alarm (TRANS-ID).
	6.	Release standby PPN	**release standby-spe**	Releases the standby PPN.

Continued on next page

Table 10-660. Processor circuit pack replacement procedure — *Continued*

√	Step	Description	Command	Procedure
	7.	Avaya services resets the translation ID	**reset translation-id**	Avaya Services executes the command. Distributors or third-party vendors must also contact Avaya Services. **NOTE:** The system message, `Cannot reset translation-ID without standby SPE being accessible`, means that both processors must be sane and operational.
	8.	Switch to the A-side	**reset system interchange**	Switches SPE control to the active, or A-side.
	9.	*Repeat for High and Critical Reliability systems*		Go back to Steps #3 through #8, this time performing the steps on the A-side.

Processor replacement procedure screens

```
change system-parameters maintenance                    Page   1 of   2   SPE B
                    MAINTENANCE-RELATED SYSTEM PARAMETERS
OPERATIONS SUPPORT PARAMETERS
            Product Identification: 1501137003
        First OSS Telephone Number:                     Abbrev Alarm Report? y
       Second OSS Telephone Number:                     Abbrev Alarm Report? n
  Alarm Origination to OSS Numbers: neither
        Cleared Alarm Notification? n                 Suspension Threshold: 5
              Restart Notification? n
           Test Remote Access Port? n
        CPE Alarm Activation Level: none
     Customer Access to INADS Port? n
       Repeat Dial Interval (mins): 7
SCHEDULED MAINTENANCE
                  Start Time: 01 : 00                   Stop Time: 01 : 01
           Daily Maintenance: daily              Save Translation: no
 Control Channel Interchange: daily     System Clocks Interchange: daily
             SPE Interchange: daily
```

Screen 10-17. Maintenance-related system parameters (change system-parameters maintenance)

Changing the grace period interval

NOTE:
This procedure requires a Avaya Services login and is for their use only.

Follow the procedure in Table 10-661 to change the grace period interval.

Table 10-661. Procedure to change the grace period interval

√	Step	Description	Command	Procedure
	1.	Type the command	**change system-parameters security**	See Screen -1818.
	2.	Go to page 2		Scroll to page 2 of the form.
	3.	Change the field value		Set the `Translation ID Number Mismatch Interval` field to a number between **1** and **90** (default is `5`). This is the number of days that the system allows access to system administration commands (add, change, remove, and duplicate) following detection of a translation ID mismatch. Press Enter to save the change. **NOTE:** The `Translation ID Number Mismatch Interval` field can only be changed by Avaya Services.

Grace period interval screen

```
change system-parameters security

                        SECURITY-RELATED SYSTEM PARAMETERS

SECURITY VIOLATION NOTIFICATION PARAMETERS

  SVN Station Security Code Violation Notification Enabled? n
          Originating Extension: ____             Referral Destination? n
Station Security Code Threshold: 10                     Time Interval: 0:03
         Announcement Extension: ____

STATION SECURITY CODE VERIFICATION PARAMETERS

                            Minimum Station Security Code Length: 4
 Station Security Code for Terminal Self-Administration Required: n

SECURITY TOOLKIT LOCK PARAMETERS

  SYSAM-LCL? n      SYSAM-RMT? n
      MAINT? n       SYS-PORT? n

Translation-ID Number Mismatch Interval (days): 5
```

Screen 10-18. Security-related system parameters (change system-parameters security)

Field definition

`Translation-ID Number Mismatch Interval (days)`	This is the number of days (between **1** and **90**, default is `5`) that the system allows access to system administration commands (add, change, remove, and duplicate) following detection of a translation-ID mismatch.

TR-LN-BD (Trunk Line Board)

The TN797 Analog Trunk and Line circuit pack provides 8 ports, any of which may be administered as one of the following:

Table 10-662. TN797 Analog Trunk and Line circuit pack – port administration

Function	Group Type	Trunk Type	LED MWI
Central Office trunk (CO)	co fx wats	loop start ground start	
CAMA/E911 trunk	cama		
Direct Inward Dialing (DID) trunk	did	wink start immed start	
Analog Line on-or-off premises	n/a	n/a	with/ without MWI

In the U.S., Canada, and like countries, all CO trunk ports of TN797 Analog Trunk and Line circuit pack should be administered as ground start (GS) trunks rather than as loop start trunks, because GS signaling provides disconnect supervision, and loop start does not. If for some reason, a port on the TN797 must be administered as loop start, it must be administered as one-way only – either incoming or outgoing – not only at the DEFINITY switch, but also at the CO switch. This is necessary to avoid collisions, i.e., “glare”, and other highly undesirable conditions.

The TN797 Analog Trunk and Line circuit pack does not support Neon Lamp Message Waiting Indication (MWI). No maintenance of the terminal connected to the Neon Analog Line circuit pack is performed.

For circuit pack problems, refer to the “XXX-BD (common port circuit pack)” maintenance documentation.

TSC-ADM (Administered Temporary Signaling Connections)

MO Name (in Alarm Log)	Alarm Level	Initial Command to Run	Full Name of MO
TSC-ADM	none	none	Administered Temporary Signaling Connections
TSC-ADM	none	none	Administered Temporary Signaling Connections

No alarms are generated for the TSC-ADM (Administered Temporary Signaling Connections) MO. Due to the unusual length of the full name of this MO (that is, Administered Temporary Signaling Connections), the abbreviation Administered TSC is used often in this Maintenance documentation.

In general, administered temporary signaling connections provide a path through ISDN-PRI switches for supplementary D-channel messages. ISDN-PRI applications [that is, Distributed Communications System (DCS)] use temporary signaling connections to exchange user information across an ISDN-PRI network. What makes Administered Temporary Signaling Connection unique is that these particular Temporary Signaling Connections stay active for an extended period time (that is, similar to a permanent data connection). These ADM Temporary Signaling Connections are used for DCS features that require a NCATSC, and the ADM TSC serves as the logical channel function in a DCS network.

A Non-Call Associated Temporary Signaling Connection (NCATSC) is a virtual connection established within a D-channel. The NCATSC connection provides user to user service by exchanging USER INFORMATION messages through the virtual connection in a D-channel without associating any B-channel connections.

An *Administered TSC* is a special NCA Administered TSC defined for the DCS over the ISDN-PRI D-channel application of G3iV1.1-286 or G3iV2-386. The Administered TSC connection is a special type of NCATSC that has an administratively defined endpoint and is established for an extended period of time.

There are two types of ADMTSCs:

- Permanent

  TSCs are established by the originating PBX (that is *Near-end* ADM TSC) or by the terminating PBX (that is, *Far-end* ADM TSC). Once these ADMTSCs are established, they remain active.

- As-Needed

  TSCs are established on an as-needed basis. In this case, the ADMTSC is established whenever it is needed, and not before.

ADMTSC maintenance provides a strategy to verify that a far-end can respond to an ISDN-PRI USER INFORMATION TSC heartbeat message, thereby indicating that user to user signaling is functioning. In addition, maintenance can retrieve the status of the ADMTSC's connection state.

Since ADMTSCs are administered on a per signaling group basis, the health of an ADMTSC also depends on the state of the D-channel or D-channel pair administered per signaling group. Refer to ISDN-SGR (ISDN-PRI Signaling Group) Maintenance documentation for details on ISDN-PRI NFAS and D-channel Backup maintenance. The two administration commands for ADMTSCs are as follows:

- **add signaling group #**
- **change signaling group #**

The two maintenance commands for ADMTSCs are as follows:

- **test tsc-administered signaling group #[/tsc index]**
- **status tsc-administered signaling group #/tsc index**

Hardware Error Log Entries and Test to Clear Values

ADM TSC Error Log Entries

Error Type	Aux Data	Associated Test	Alarm Level	On/Off Board	Test to Clear Value
3840-3967(a)	tsc index #	test tsc-administered			

Notes:

a. There is no Test to Clear Value for error types 3840-3967. The error types provides the following additional data that may prove useful when tracking down problems.

   This error indicates that a TSC Heartbeat Inquiry Test was run on an Active far-end Administered TSC from the switch. Upon receiving the heartbeat message, the network communicated to the switch that the call reference value is not currently in use on the ISDN interface. As a result, the error was logged. Check the signaling group status of the D-channel or D-channel pair via the **status signaling-group <group>** command for the Administered TSC. Check the status of the Administered TSC via the **status tsc-administered** command. Also check the administration of the Administered TSC on the switch.

   This error may only be affecting service for some DCS customers. Upon receipt of this error condition, the switch tears down and re-establishes the ADMTSC within 20 minutes.

b. The port field in the error log contains the signaling group number for TSC-ADM errors.

System Technician-Demanded Tests: Descriptions and Error Codes

Always investigate tests in the order presented in the following tables when inspecting errors in the system. By clearing error codes associated with the *TSC Heartbeat Inquiry Test,* for example, you may also clear errors generated from other tests in the testing sequence.

Order of Investigation	Short Test Sequence	Long Test Sequence	D/ND[1]
TSC Heartbeat Inquiry Test (#604)			ND

1 D = Destructive; ND = Nondestructive

TSC Heartbeat Inquiry Test(#604)

This test can be invoked by system technician personnel for any ADMTSC administered in the switch. The following table indicates the possible error conditions that might be encountered when the test is invoked. Most of the error conditions do not log an error, but switched services may take some type of recovery action in certain instances.

This test sends a USER INFORMATION TSC heartbeat message inquiry across an Administered TSC to determine if the far-end can respond to a USER INFORMATION TSC heartbeat message.

Table 10-663. TEST #604 TSC Heartbeat Inquiry Test

Error Code	Test Result	Description/Recommendation
2100	ABORT	Could not allocate the necessary system resources to run this test. 1. Reissue the **test tsc-administered** command at 1-minute intervals a maximum of 5 times.
1005	ABORT	The Administered TSC does not exist. 1. Display the administration for the Administered TSC. 2. If an Administered TSC is exists, reissue the **test tsc-administered** command. 3. If the test continues to abort, escalate problem.

Continued on next page

Table 10-663. TEST #604 TSC Heartbeat Inquiry Test

Error Code	Test Result	Description/Recommendation
1113	ABORT	The D-channel is out-of-service. 1. Refer to the ISDN-LNK (ISDN-PRI Signaling Link Port) Maintenance documentation.
1145	ABORT	There is congestion in the network. 1. Issue the **status tsc-administered** command at 1-minute intervals a maximum of 5 times. 2. If the congestion does not clear, disable and enable the Administered TSC via **change sig-group <group>**. To disable the Administered TSC, display the (administration) Signaling Group Form via **change sig-group <group>** where **<group>** refers to the number of the signaling group under which the suspect TSC is administered. Change the Enable field to “n.” To enable the ADMTSC, change the “Enable” field to “y.” 3. If the congestion still does not clear, check other nodes in the network. If congestion persists, then escalate the problem.
1146	ABORT	The congestion just occurred in the network. 1. Issue the **status tsc-administered** command at 1-minute intervals a maximum of three times. 2. If congestion does not clear, disable and enable the Administered TSC via the **change sig-group <group>** command. To disable the Administered TSC, display the (administration) Signaling Group Form via the **change sig-group <group>** command where **<group>** refers to the number of the signaling group under which the suspect TSC is administered. Change the Enable field to "n." To enable the ADMTSC, change the "Enable" field to "y." 3. If congestion still does not clear, check the other nodes in the network. If the congestion persists, escalate the problem.

Continued on next page

Table 10-663. TEST #604 TSC Heartbeat Inquiry Test

Error Code	Test Result	Description/Recommendation
1147	ABORT	The ADMTSC is being torn down. 1. Issue the **status tsc-administered** command at 1-minute intervals a maximum of three times. 2. If ADMTSC is still down, disable and enable the ADM TSC via the **change sig-group <group>** command. **NOTE:** To disable the ADMTSC, display the (administration) Signaling Group Form via **change sig-group <group>** where **<group>** refers to the number of the signaling group under which the suspect TSC is administered. Change the Enable field to "n." To enable the ADMTSC, change the "Enable" field to "y." 3. If the ADMTSC is still down, check the other nodes in the network. If the ADMTSC is still down, escalate the problem.
1148	ABORT	The ADMTSC is enabled, but inactive (near-end). 1. Disable and enable the ADMTSC. 2. Reissue the **test tsc-administered** command. 3. If the ADMTSC is still inactive, check the other nodes in the network.
1149	ABORT	The ADMTSC is disabled. 1. Enable the TSC, and see if the status indicates "active." 2. Reissue the **test tsc-administered** command. 3. If the TSC still disabled, remove the ADMTSC from the system.
1181	ABORT	Ran out of ADMTSC resources. 1. Reissue the **test tsc-administered** command at 1-minute intervals a maximum of three times.
1182	ABORT	The BX.25 link is down at the gateway. 1. Disable the ADMTSC. 2. Check the status of the gateway link via **status link link-no**. 3. Once the gateway link indicates an "in-service" state, enable the Administered TSC. 4. Reissue the **test tsc-administered** command.

Continued on next page

Table 10-663. TEST #604 TSC Heartbeat Inquiry Test

Error Code	Test Result	Description/Recommendation
2000	ABORT	The Administered TSC is not responding to a TSC heartbeat inquiry. 1. Retry the **test tsc-administered** command at 1-minute intervals a maximum of three times. 2. If the problem continues to fail, obtain the status of the D-channel or D-channel pair associated with the ADMTSC via **status sig-group <group>** . If the D-channel is INS (that is, in-service) and the status of the ADMTSC appears to be active, disable and enable the ADMTSC through administration. **NOTE:** To disable the ADMTSC, display the (administration) Signaling Group Form via **change sig-group <group>** where **<group>** refers to the number of the signaling group under which the suspect TSC is administered. Change the "Enable" field to "n." To enable the ADMTSC, change the "Enable" field to "y." 3. Reissue the **test tsc-administered** command. 4. If the test fails, check the ADMTSC node on the other side of the network to verify that the ADM TSC is indeed active.
2012	ABORT	Internal System Error. 1. Reissue the **test tsc-administered** command at 1-minute intervals a maximum of 5 times.
1	FAIL	The Administered TSC is not active (far-end). 1. Reissue the **test tsc-administered** command. 2. Verify that the Administered TSC node on the other side of the network is active. 3. Disable and enable the Administered TSC. 4. Retry the **test tsc-administered** command.
2	FAIL	Facility IE (Information Element) reject. 1. Check all other nodes in the network, and make sure Administered TSC is active.
	PASS	The Administered TSC responded to a heartbeat.

TTR-LEV (TTR Level)

MO Name (in Alarm Log)	Alarm Level	Initial Command to Run	Full Name of MO
TTR-LEV	WARNING	See Note[1]	TTR Level

1 See the “Repair Procedure for the TTR Level Maintenance Object” section.

A TN748 Tone Detector circuit pack and the TN744 Call Classifier circuit pack provides touch tone receivers (TTRs or DTMR-PTs)) which are devices used to interpret touch tone calling signals and to translate the dual tones into the following valid digits: 0 through 9, *, and #. A Tone Detector circuit pack is a resource shared by all PBX users. The term “touch tone” formerly bore an AT&T trademark while the term “dual tone multifrequency receiver” has been the generic term used for this kind of device. A Tone Detector circuit pack also has general purpose tone detector ports (GPTD-PTs) to detect call progress tones, modem answer tones, and transmission test tones. In G3iV1.1-286 or G3iV2-386, Call Classifier Ports (CLSFY-PTs) have also been added to detect voice or network intercept tones. A Call Classifier Port (CLSFY-PT) can function as either a DTMR-PT or as a GPTD-PT.

When a user places a call from a digital or analog voice terminal on the switch, a TTR is needed to interpret the dual tone multifrequency signals sent from the voice terminal. The TTR is in use until the total number of digits needed is collected or until a time-out occurs. Dial tone is supplied to a user after receipt of an off-hook signal which signifies that a TTR is connected and ready to receive digits. For example, if there are 20 TTRs in the system being used simultaneously by 20 users at a given time, then the 21st user would not receive dial tone until a TTR becomes available. It is for this reason that it is necessary to have sufficient tone detectors in the system to prevent delay in receiving dial tone. The TTR-LEV errors can be used to determine a shortage of tone detectors. Use the **list measurements tone-receiver** command to determine tone detector usage. For more information on this command, refer to *Reports for Avaya MultiVantage Software*. The minimum threshold values assigned on the Maintenance-Related System Parameters Form for TTRs (DTMR-PTs), CPTRs (GPTD-PTs), and CCRs (CLSFY-PTs) should match the number of touch tone receivers (TTR) and tone detectors (GPTD-PT) in the system. The numbers are four TTRs and two GPTDs for each Tone Detector circuit pack [TN748, TN748B, and TN748C, and (the TN756 Combined Tone Detector/Tone-Clock in a single-carrier cabinet system)] used in the switch and 8 CCRs for each Call Classifier Port (TN744) circuit pack. The threshold values are administered via the **change system-parameters maintenance** command on the Maintenance-Related System Parameters Form. The desired numbers are entered in the “TTR” (DTMR-PT), “CPTR” (GPTD-PT), and “Call Classifier” (CLSFY-PT) fields, respectively.

The TTR Level (Touch Tone Receiver Level) MO is used to represent the following possible events:

1. The total number of General Purpose Tone Detector Ports (GPTD-PTs), [also known as Call Progress Tone Receivers (CPTRs)], currently in service is less than the administered threshold number.
2. The total number of Dual Tone Multifrequency Receiver Ports (DTMR-PTs) [(also known as Touch Tone Receiver (TTRs)], currently in service is less than the administered threshold number.

The TTR Level maintenance performs a monitoring function. When one of the above events occurs, the switch reports it. At this point, the system is still operating properly, but the system capacity is reduced.

The above events can occur if:

1. The threshold number of General Purpose Tone Detector Ports (GPTD-PTs) for service or the threshold number of Dual Tone Multifrequency Receiver Ports (DTMR-PTs) for service is administered incorrectly on a Tone Detector circuit pack.
2. Too many General Purpose Tone Detector Ports (GPTD-PTs) or Dual Tone Multifrequency Receiver Ports (DTMR-PTs) have been taken out-of-service for a Tone Detector circuit pack (that is, the ports have been either busied-out by system technician or maintenance has taken them out-of-service).
3. Too many ports have been taken out-of-service for a Call Classifier circuit pack (that is, the ports have been busied-out by system technician or maintenance has taken them out-of-service).
4. There is an insufficient number of General Purpose Tone Detector Ports (GPTD-PTs) or Dual Tone Multifrequency Receiver Ports (DTMR-PTs) in the system for a Tone Detector circuit pack. Or there is an insufficient number of ports in the system for a Call Classifier circuit pack.

Repair Procedure for the TTR Level Maintenance Object

The following is a step-by-step approach to resolve the TTR Level maintenance alarm.

1. Execute the **display error** command. Determine if the TTR-LEV warning alarm is raised against the GPTD-PT level, the DTMR-PT level, or the CLSFY-PT level. In the Hardware Error Log Table, the error type field of the TTR-LEV MO has a value of 2 for DTMR-PT level, a value of 4 for GPTD-PT level, or a value of 6 for CLSFY-PT level.

   Perform the actions described in Step 2 for the DTMR-PT, the GPTD-PT, or the CLSFY-PT.

2. Issue the **change system-parameters maintenance** command. Check the administered value(s) for TTRs and CPTRs for service on the Tone Detector circuit packs or for CCRs on the Call Classifier Port (CLSFY-PT) circuit pack. If a threshold value is set too high, change it to a lower value via the **change system-parameters maintenance** command and wait one minute for the alarm to clear.

   To determine the correct TTR, CPTR, and Call Classifier port values, check the total number of Tone Detector and Tone-Clock circuit pack and Call Classifier circuit packs (TN744) currently in the system. A Tone Detector circuit pack has two GPTD ports and four DTMR ports. A Call Classifier circuit pack has eight ports. Verify that the total number of GPTD-PTs, DTMR-PTs, and/or CLSFY-PTs in the system is greater than or equal to their respective administered threshold values. If not, then you must either (1) add more Tone Detector circuit packs and/or Call Classifier circuit packs to the system as required or (2) reduce the threshold to match the number in the system. If after (1) adding more Tone Detector circuit packs and/or Call Classifier circuit packs or (2) reducing the threshold, the TTR Level alarm is still present, then proceed to Step 3.

3. Execute the **display error** command. Look for a GPTD-PT, DTMR-PT, or CLSFY-PT that has been busied out. A port that has been busied out has a value of 18 in the error type field of the Hardware Error Log.

   For each of the busied-out ports, use the following procedure:

   - Determine why the port was busied out.
   - If the port can be placed back into service, test the port via the **test port PCSSpp** command.
   - If all the tests pass, release the port via the **release port PCSSpp** command. Then wait one minute for the TTR Level alarm to clear.

   If this does not clear the TTR Level alarm, proceed to Step 4.

4. Execute the **display alarm** command. Determine the address of the Tone Detector circuit pack which contains the defective (alarmed) GPTD-PT or DTMR-PT.

   Execute the **test board PCSS long rep 3** command where PCSS is the address (that is, port network number, carrier designation, and slot address) of the Tone Detector circuit pack or Call Classifier circuit pack containing the defective (alarmed) GPTD-PT or DTMR-PT.

   If this does not clear the TTR Level alarm, proceed to Step 5.

5. At this point, the only way to clear the alarm is to replace the Tone Detector circuit pack or Call Classifier circuit pack containing the defective (alarmed) GPTD-PT, DTMR-PT or CLSFY-PT.

Hardware Error Log Entries and Test to Clear Values

TTR Level Error Log Entries

Error Type	Aux Data	Associated Test	Alarm Level	On/Off Board	Test to Clear Value
1 (a)	1	None			
2 (b)	2		WARNING (See the WARNING message below)	OFF	
3 (c)	3	None			
4 (d)	4		WARNING	OFF	
5 (e)	5	None			
6 (f)	6		WARNING	OFF	
7 (g)	7		MAJOR	OFF	
8 (h)	8		MINOR	OFF	
9 (i)	9		MINOR	OFF	

WARNING:
The Alarm is upgraded to MAJOR if the Base Tone Generator is set to 12 (France).

Notes:

a. Error code 1 does not indicate a current error condition. It indicates that the number of DTMR ports in service was below the administered threshold, but is now equal to or greater than the threshold. These errors are typically generated during boot time or other transitional states when the ports are being brought into service.

b. The total number of DTMR ports currently in service is below the administered threshold. To clear the alarm, refer to the repair procedure described above.

c. Error code 3 does not indicate a current error condition. It indicates that the number of GPTD ports in service was below the administered threshold, but is now equal to or greater than the threshold. These errors are typically generated during boot time or other transitional states when the ports are being brought into service.

d. The total number of GPTD ports currently in service is below the administered threshold. To clear the alarm, refer to the repair procedure describe above.

e. Error code 5 does not indicate a current error condition. It indicates that the number of Call Classifier ports (CLSFY-PT) in service was below the administered threshold, but is now equal to or greater than the threshold. These errors are typically generated during boot time or other transitional states when the ports are being brought into service.

f. The total number of Call Classifier ports currently in service is below the administered threshold. To clear the alarm, refer to the repair procedure described above.

g. There are currently no DTMR ports in service. To clear the alarm, refer to the repair procedure described above.

h. There are currently no GPTD ports in service. To clear the alarm, refer to the repair procedure described above.

i. There are currently no Call Classifier ports in service. To clear the alarm, refer to the repair procedure described above.

UDS1-BD (UDS1 Interface Circuit Pack)

MO Name (in Alarm Log)	Alarm Level	Initial Command to Run[1]	Full Name of MO
UDS1-BD	MAJOR	test board UUCSS sh	UDS1 Interface Circuit Pack
UDS1-BD	MINOR	test board UUCSS l	UDS1 Interface Circuit Pack
UDS1-BD	WARNING	test board UUCSS sh	UDS1 Interface Circuit Pack

1 UU is the universal cabinet number (1 for PPN, 2 - 3 for EPNs). C is the carrier designation (A, B, C, D, or E). SS is the number of the slot in which the circuit pack resides (01 to 21).

2Mbit Japan trunk (TN2242)

The TN2242 2Mbit, 30-port trunk circuit pack supports Japanese TTC private networking environments. This circuit pack interfaces only with network equipment or other circuit packs of the same model and is incompatible with all other digital trunk circuit packs.

The maintenance strategy for the TN2242 is similar to that of the TN464F or later suffix DS1 interface circuit pack. The TN2242 circuit pack is functionally the same as the TN464F (without ICSU) with the following exceptions:

- The Blue Alarm Inquiry Test (#139) always passes for the TN2242
- The **test ds1-loop** command is not executed for the TN2242
- When **reset board** is run on a TN2242, a different initialization message is sent for the local looparound test (Test #135) is executed
- Since an Integrated Channel Service Unit (ICSU) is not supported on this circuit pack, tests associated with an ICSU are not executed,
- Tests associated with new functionality available with the video-enabled TN464F are not executed for the TN2242
- Cyclical Redundancy Check (CRC) is not defined for this circuit pack
- The D-Channel can be user-assigned to any port 1 - 30, when the signaling mode is ISDN-PRI
- Wideband is not supported
- Stations (OPS) are not supported

The TN2242 circuit pack also supports specialized versions of CAS (Channel Associated Signaling) and ISDN-PRI signaling that pertain to the TTC private networking environment in Japan.

Upgrading to TN2242

Figure 10-98 shows the hardware connections for public network access in Japan. The upgrade procedure requires removing the JRC (Japan Radio Corporation) external converter in Figure 9-37.

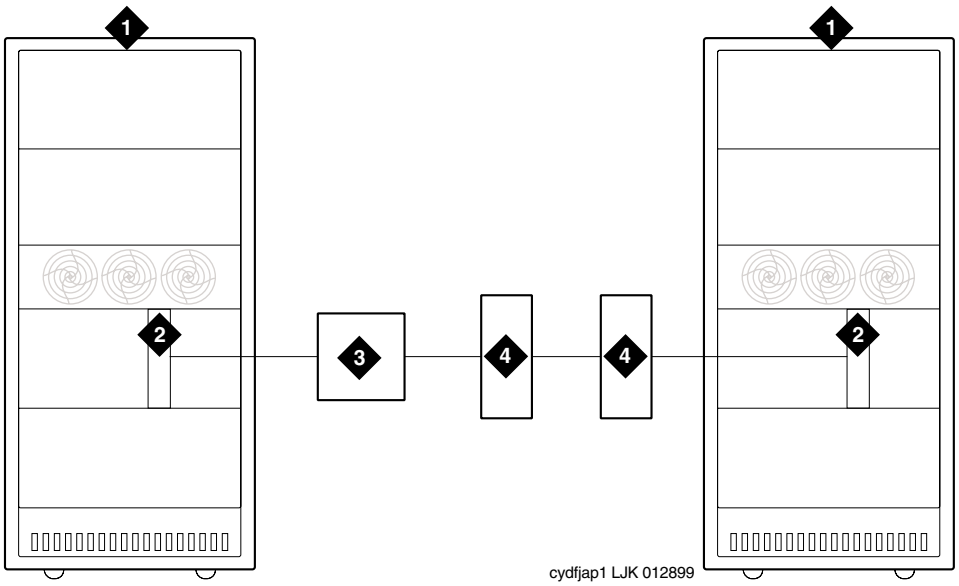

Figure Notes:

1. DEFINITY Release 7
2. UDS1-BD DS1-CONV circuit pack (24-trunk digital tie-trunk)
3. JRC (Japan Radio Corporation) external converter
4. TDM facilities

Figure 10-98. Japanese TTC public network connections

Figure 10-99 shows the hardware connections for private network access using the TN2242 circuit pack.

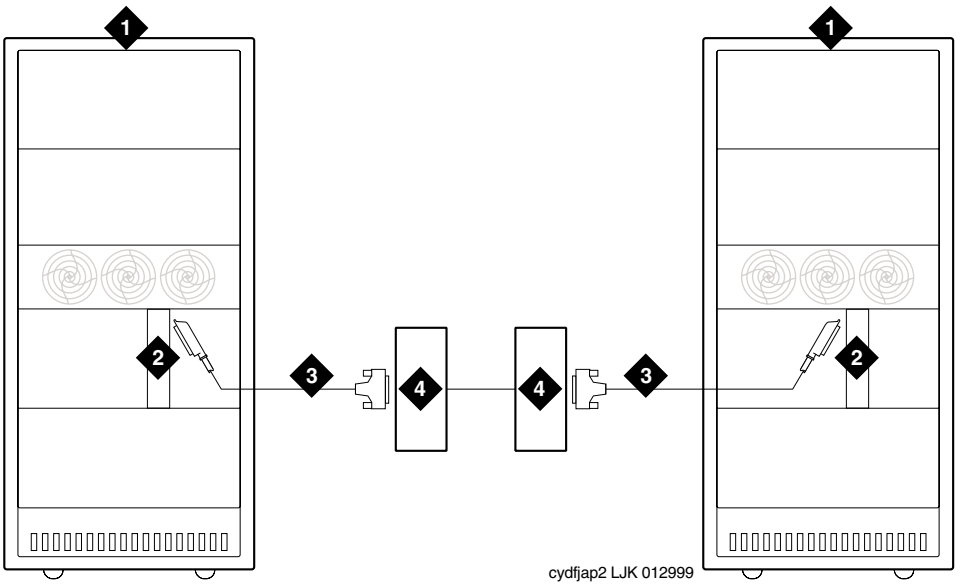

Figure Notes:

1. DEFINITY Release 7
2. TN2242 2Mbit Japan trunk circuit pack
3. H600-513 cable assembly cable. (See "H600-513 cable pinout").
4. TDM facilities

Figure 10-99. TN2242 Japan trunk TTC private network connections

To upgrade a system to the TN2242 circuit pack:

1. Busyout the UDS1-BD DS1-CONV circuit pack (**busyout board UUCSS**).
2. Remove the TN464 administration (**change circuit pack, change ds1**, and **change trunk group *n***).
3. Remove the UDS1-BD circuit packs.
4. Remove the JRC (Japan Radio Corporation) external converter and cable.
5. Insert the TN2242 circuit packs.
6. Connect the TN2242 to the TDM with the H600-513 cable assembly.
7. Administer the TN2242 circuit pack (see "Administration").

H600-513 cable pinout

Table 10-664 shows the pinout for the H600-513 cable assembly:

Table 10-664. H600-513 cable assembly pinout

TN2242			TDM	
50-pin connection pin number	Color	Lead Designation	Color	15-pin connection pin number
22	W-BL	Line in +	W-BL	4
23	W-O	Line out -	W-O	9
47	Bl-W	Line in -	Bl-W	11
48	O-W	Line out +	O-W	2

Administration

The TN2242 circuit pack requires board-level translation data. Before administering any ports on the circuit pack, administer the following forms:

- Circuit pack (**change circuit pack**)
- DS1 (**add ds1**)
- Trunk group (**add trunk group *n***)

  Table 10-665 outlines the trunk group administration parameters that are required for this interface to operate successfully in Japan.

Table 10-665. TN2242 administration

Field	Value
Trunk Group form, Page 1	
Trunk Type (in/out)	wink, delay, immed (all permutations)
Trunk Signaling Type	blank
Answer Supervision Timeout	0
Receive Answer Supervision	y
Disconnect Supervision - In?	y
Disconnect Supervision - Out?	y

Continued on next page

Table 10-665. TN2242 administration — *Continued*

Field	Value
Incoming Dial Type	tone rotary mf (to other DEFINITYs only)
Wink Timer for wink type	300
Wink Timer for delay type	4500
Trunk Group form, Page 3 (Administrable Timers)	
Incoming Disconnect	100
Incoming Glare Guard	800ms or higher
Incoming Dial Guard	10
Incoming Incomplete Dial Alarm	25 or higher
Incoming Partial Dial	18
PPS	10 or 20
Make (for PPS 10)	35
Break (for PPS 10)	65
Make (for PPS 20)	15
Break (for PPS 20)	35
Outgoing Disconnect	100
Outgoing Glare Guard	800 or higher
Outgoing Rotary Dial Interdigit	800
Outgoing Seizure Response	5

LEDs

The LEDs on the faceplate of the TN2242 circuit pack indicate its status as described in Table 10-666.

Table 10-666. TN2242 LED interpretation

LED	Meaning
Red	■ MAJOR alarm ■ MINOR alarm ■ Firmware initialization during circuit pack insertion
Yellow	A port on the circuit pack is in use.
Green	Maintenance testing is in progress on the circuit pack or its ports.

Interactions with other MOs

The TN2242 maintenance object directly interacts with these maintenance objects:

- ‘‘Synchronization’’
- ‘‘TN2242 trunk ports’’
- ‘‘Call processing’’

Synchronization

The DS1 facility plays a vital role in the synchronization subsystem. The Tone/Clock circuit pack uses either the primary or secondary timing reference, whether internal (local -- Tone/Clock circuit pack) or external. TN2242 circuit packs can be administered as “primary” or “secondary” synchronization references.

The TN2242 circuit pack sends DS1 link status information to the synchronization reference switching algorithm. This algorithm determines whether timing references should be switched due to failure or restore conditions.

TN2242 trunk ports

The TN2242 circuit pack MO is responsible for monitoring the health of the DS1 facility. If a DS1 facility goes down, then that facility’s DS1 circuit pack instructs all DS1 port MOs associated with the facility to place their trunks (or ISDN-PRI signaling link) in an out-of-service state.

Call processing

The **busyout board** command tears down all calls and signaling links associated with a TN2242 circuit pack.

TN2242 serviceability

Hardware connections

This circuit pack can be

- Mated to another circuit pack of the same type when interconnecting two DEFINITY systems
- Directly connected to the TDM network device
- Directly connected to another vendor PBX using ISDN PRI signaling

Loopbacks

There is no automatic process to signal the remote end to provide loopbacks for testing purposes. All loopbacks to be tested with a single circuit pack must be local loopbacks on the circuit pack.

Remote loopbacks may be possible with the TDM network equipment with appropriate coordination between BCS Services Technicians and the service technicians of the TDM equipment (considered a CPE device).

TN464GP/TN2464BP UDS1 Circuit Packs With Echo Cancellation

The TN464GP and TN2464BP UDS1 circuit packs feature an integrated echo canceller. Echo cancellation is a Software Right-To-Use feature that can be turned as needed. Echo cancellation supports channels carrying voice and is not intended for channels that support data. The TN464GP/TN2464BP will have the capability to detect modem tone and turn off echo cancellation accordingly for the duration of a data call. Echo cancellation on the TN464GP/TN2464BP will be administrable per channel. The echo cancellation circuitry on a given TN464GP/TN2464BP is driven by administrable parameters.

The TN464GP/TN2464BP circuit packs are intended for use with ATM, IP, wideband, or other complex services which are likely to have problems with echo.

The echo cancellation circuitry on a given TN464GP/TN2464BP is a right-to-use feature on the System-Parameters Customer-Options form. Also on this form is a field `Maximum Number of DS1 Boards with Echo Cancellation` that indicates the number of DS1 boards on which echo cancellation is activated for a specific customer.

The DS1 CIRCUIT PACK form for the TN464GP/TN2464BP circuit packs has fields to support echo cancellation: `Echo Cancellation?`, `EC Direction`, and `EC Configuration`. The `Echo Cancellation?` field displays only if the Echo Cancellation feature has been activated on the **System-Parameters Customer Options** form. The `EC Direction` and `EC Configuration` fields do not display unless the user has entered `y` in the `DS1 Echo Cancellation?` field.

- EC Direction determines the direction from which echo will be eliminated, ether inward or outward.
- EC Configuration is the set of parameters that will be used when cancelling echo. This information is stored in firmware on the UDS1 circuit pack.

Echo cancellation is turned on or off on a trunk group basis using the **change trunk-group** command. If the TRUNK GROUP field, `DS1 Echo Cancellation?` is set to `y`, echo cancellation will be applied to every TN464GP/TN2464BP trunk member in that trunk group. The echo cancellation parameters used for a given trunk member are determined by the Echo Cancellation Configuration Number administered on the **DS1 Circuit Pack** form for that specific trunk's board.

Echo cancellation on the TN464GP/TN2464BP is selectable per channel, even though it is administrable on a trunk group basis. For example, if all but two ports on a TN464GP/TN2464BP need to have echo cancellation applied, those two ports must be put in a trunk group where the `DS1 Echo Cancellation` field is set to `n`. The remaining ports will be in a trunk group(s) where the `DS1 Echo Cancellation` field is set to `y`. A user will have the ability to cancel echo coming from the network (far-end echo) or coming from the switch (near-end echo).

The TN464 UDS1 Circuit Pack

The TN464C, D, E, F, and GP Universal DS1 Interface circuit packs provide an interface to the DS1 facility, and are designed to support 24 DS0 channels on a 1.544 Mbps DS1 link, or 32 DS0 channels on a 2.048 Mbps link. (The 32-channel interface is not supported on G3r V1 systems.) The DS0 channels can be administered as trunks to other switches, lines to off-premises stations, ports to line-side PRI terminating devices, or ports to other line-side non-PRI terminating devices. (DS0 channels on TN464/Bs can only be administered as trunks to other switches.) For more information on how TN464 ports can be used, see the maintenance objects (MOs): ISDN-SGR, ISDN-TRK, ISDN-LNK, PE-BCHL, TIE-DS1, CO-DS1, DID-DS1, OPS-LINE and WAE-PT.

NOTE:
For information on other DS1 circuit packs, see DS1-BD.

NOTE:
The TN464GP provides Echo Cancellation, and in addition, the TN464GP firmware may be updated using the firmware download feature.

Throughout this MO on the UDS1-BD, the term TN464 will mean any TN464C or later suffix UDS1 circuit pack. If part of this section refers to a specific suffix TN464 board, it will be noted as such.

The UDS1 maintenance strategy includes logging in-line errors reported by the UDS1 circuit pack, running tests for error diagnosis and recovery, and raising or clearing maintenance alarms.

TN464 circuit packs support the following:

- Digital Tie, CO, and DID trunks
- DS1 off-premises (OPS) lines
- Narrowband and wideband access endpoint ports
- ISDN-PRI trunks and accompanying signaling channel
- PRI endpoint ports (PE-BCHL) and accompanying signaling channel

The TN464 supports digital Tie, CO, and DID trunks, and OPS lines. On-board firmware performs call control signaling for the Tie, CO and DID trunks and OPS lines. ISDN-PRI trunk and PRI endpoint signaling (Q.921, Q.931) is received and generated by system software and is transmitted on a system link through the TN1655 Packet Interface and packet bus to the UDS1 where it is placed on the D-channel. Signaling over the DS1 link has to be synchronized between the transmitting and receiving ends to ensure error-free communication. Refer to ''SYNC (Synchronization)'' in this MO for details.

Each trunk, line, or endpoint has its own maintenance strategy, but all depend on the health of the UDS1 Interface circuit pack. Refer to the following MOs for details: TIE-DS1, CO-DS1, DID-DS1, OPS-LINE, ISDN-TRK, ISDN-LNK, ISDN-SGR, WAE-PT and PE-BCHL. The maintenance strategy for the TN464 UDS1 Interface circuit pack (UDS1-BD) is very similar to the maintenance strategy for the TN767 DS1 Interface circuit pack (DS1-BD). The same commands are used for administering and testing the boards. The differences in maintenance strategy between the boards result from the UDS1 circuit pack's direct interface to the Packet Bus used for ISDN-PRI signaling (ISDN-LNK). While both the TN464 and TN767 can support ISDN-PRI B-channels, ISDN-PRI D-channel signaling applications require a TN464 UDS1 circuit pack.

The UDS1 circuit pack, combined with the 120A1 CSU Module forms an Enhanced Integrated CSU. The 120A1 CSU Module, when combined with the functionality provided by the TN464F hardware and firmware, and switch software, provides functionality equivalent to an external stand-alone Avaya ESF T1 CSU. The 120A1 CSU Module connects to the UDS1 circuit pack on the I/O connector panel on the back of the port carrier. The new CSU Module thus becomes an integrated part of the DEFINITY system. Throughout this MO, the term 120A1 will mean a 120A1 or later suffix CSU Module.

The Enhanced Integrated CSU is for use in the United States of America with 1.544 Mbps DS1 service. For further details on the 120A1 CSU Module refer to *DEFINITY Communications System Generic 1, Generic 2, and Generic 3 V1 and V2 - Integrated CSU Module Installation and Operation*.

The UDS1-BD and 120A1 CSU Module support on-demand loopback tests that assist in the detection of faults between the UDS1-BD circuit pack and the CSU Module, between the Integrated CSU and the optional Customer Premises Loopback Jack, or between the Integrated CSU and remote CSU. These loopback tests are explained in detail later in this UDS1-BD MO, but Figure 10-100 gives a high level overview of the loopback points.

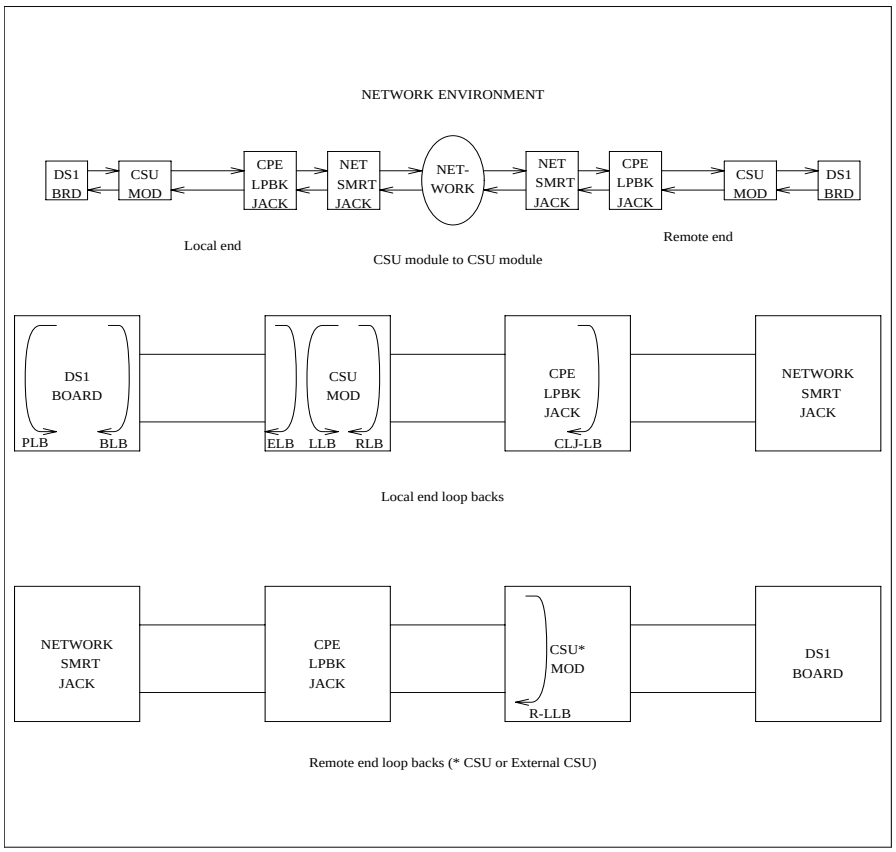

Figure 10-100. High Level Overview Of Loopback Points

The following list of acronym definitions are for the Figure 10-100:

- PLB = Payload Loopback
- BLB = Board Loopback
- ELB = Equipment Loopback
- LLB = Line Loopback
- RLB = Repeater Loopback
- CLJ = Loopback Jack Loopback
- R-LLB = Remote Line Loopback
- SMRT = Smart Jack
- LPBK = Loopback

Circuit Pack Administration and Options

The DS1 configuration for each circuit pack is administered on the **DS1 Circuit Pack** form. `Bit Rate` is set to 1.544 Mbps for 24-channel systems, and 2.048 Mbps for 32-channel systems. `Country Protocol` is used to drive layer 3 protocol decisions based on PRI specifications specific to a given country (not those related to specific features). This Country Protocol is independent of the `Country` parameter administered on the **country-options system-parameters** form. Different UDS1 circuit packs may be administered with different Country Protocols, allowing the switch to act as a gateway between two incompatible ISDN-PRI implementations (for example, between two different countries). US systems use country protocol 1. `Near-End CSU Type` is set to `other` for no CSU installed or for an external CSU such as an Avaya ESF T1 CSU, or set to `integrated` for the 120A1 CSU Module or the 401A T1 Sync Splitter. Answering `integrated` will cause additional fields to be displayed for administering the Enhanced Integrated CSU Module. `E1 Sync-Splitter?` is set to `y` if a 402A or 403A E1 Sync splitter is used to provide timing to an ATM switch. `Echo Cancellation?` is set to `y` if the echo cancellation right-to-use feature has been activated and this TN464GP/TN2464BP or later suffix board is to supply echo cancellation. In addition to the above there are numerous other fields defining such parameters as framing modes, line coding, companding mode and so on. For details, refer to the *Administrator's Guide for Avaya MultiVantage Software*, and *DEFINITY Communications System DS1/CEPT/ISDN-PRI Reference*, 555-025-107.

Two option jumpers located on the side of the TN464C/D circuit pack must be installed correctly. The figures on the following page show how to configure the circuit pack for 24-channel or 32-channel DS1, and for 75*W (coaxial) or 120*W trunk connections. The channel selection must match the parameters administered on the corresponding **DS1 Circuit Pack** Form. (US applications use 24 Channels.)

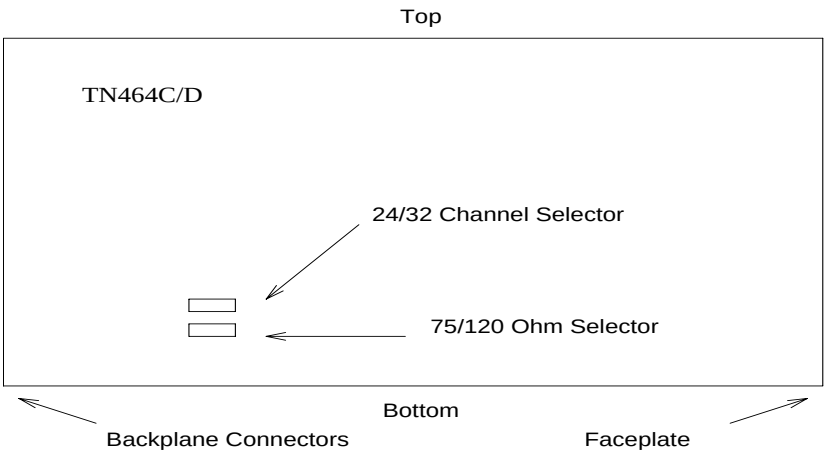

Figure 10-101. TN464C/D DS1 Option Jumpers

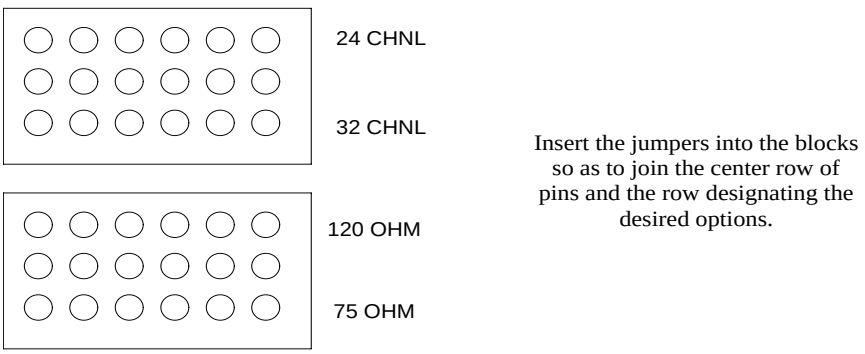

Figure 10-102. TN464C/D DS1 Option Jumpers (Continued)

The option switch located on the component side of the TN464E/F circuit pack must be set correctly. Figure 10-103 on page 10-1843 shows how to configure the circuit pack for 24-channel or 32-channel DS1. The channel selection must match the parameters administered on the corresponding **DS1 Circuit Pack** Form. (US applications use 24 Channels.)

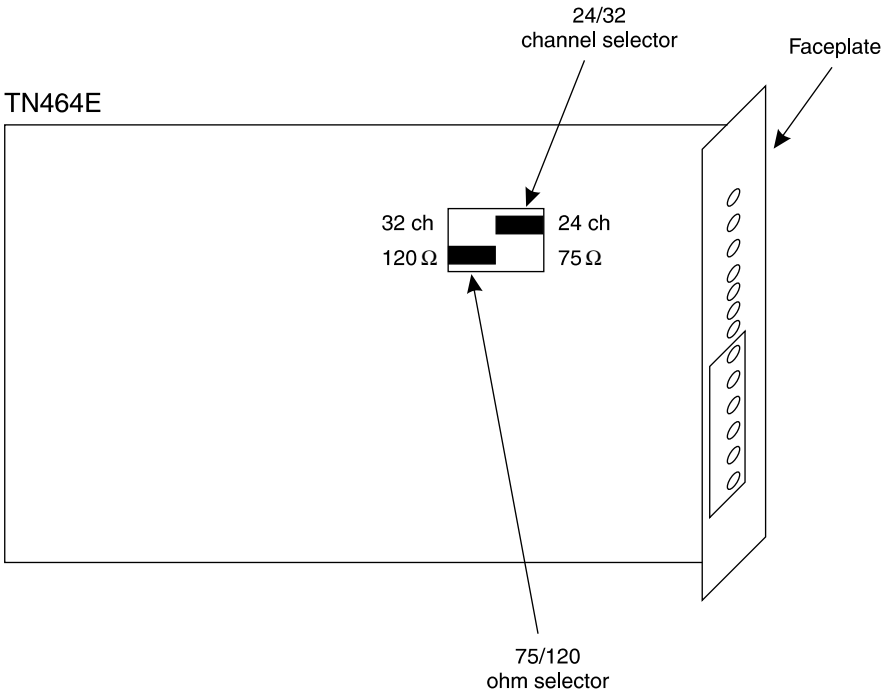

Figure 10-103. TN464E/F DS1 Option switches

Firmware Download Feature

Firmware Download provides the Avaya DEFINITY Server the ability to download new firmware to one or more UDS1 circuit boards residing in its system. The download image is copied onto a source (C-LAN) board, using FTP. The image is then copied to the target boards Flash over the TDM bus. The transfer of the download image from the source board to the target board is done under switch software's control. This process is initiated using the DEFINITY SAT interface.

If the firmware download fails for this circuit pack, an error is logged, and a alarm raised (See Error Type 174 for this MO). Also see the FW-DWNLD MO for more information on trouble shooting firmware download problems.

Error Log Entries and Test to Clear Values

Table 10-667. DS1 Interface Circuit Pack Maintenance Error Log Entries

Error Type	Aux Data	Associated Test	Alarm Level	On/ Off Board	Test to Clear Value
0[1]	0	Any	Any	Any	test board UUCSS
1(a)	0	Circuit pack removed or SAKI Test (#53)	MIN/WRN[2]	ON	
18(b)	0	busyout board UUCSS	WARNING	OFF	release board UUCSS
23(c)	0		WARNING	OFF	add ds1 UUCSS
125(d)	none 3	None	MIN/WRN[3]	ON	
257	65535	Control Channel Loop Test (#52)	MINOR	ON	test board UUCSS l r 20
257(e)	Any	None			
513(f)	Any		MIN/WRN[3]	ON	
514(g)	46086		MIN/WRN[3]	ON	
769(h)	46085		MIN/WRN[3]	ON	
770(i)	46096		MIN/WRN[3]	ON	
1025(e)	4363	NPE Audit Test (#50)			
1281	Any	Loss of Signal Alarm Inquiry Test (#138)	MIN/WRN[3]	OFF	test board UUCSS
1300(j)	Any	Loss Of Signal Alarm Inquiry Test (#138)	WARNING	OFF	test board UUCSS
1301(k)	Any	Loss Of Signal Alarm Inquiry Test (#138)	WARNING	OFF	test board UUCSS
1302(l)	Any	Loss Of Signal Alarm Inquiry Test (#138)	MIN/WRN[3]	OFF	test board UUCSS
1303(m)	Any	Loss Of Signal Alarm Inquiry Test (#138)	MIN/WRN[3]	ON	test board UUCSS
1310(n)	Any	Board Loopback Test (#1209)	MINOR	ON	test ds1-loop UUCSS ds1/csu-loopback-tests
1311(o)	Any	Equipment Loopback Test (#1210)	MIN/WRN[3]	OFF	test ds1-loop UUCSS ds1/csu-loopback-tests
1312(p)	Any	Repeater Loopback Test (#1211)	MIN/WRN[3]	OFF	test ds1-loop UUCSS ds1/csu-loopback-tests
1313(q)	Any	CPE Loopback Jack Test (#1212)	MIN/WRN[3]	OFF	test ds1-loop UUCSS end-loopback/span-test
1314(r)	Any	Far CSU Loopback Test (#1213)	MIN/WRN[3]	OFF	test ds1-loop UUCSS end-loopback/span-test
1320	Any	Loss of Signal Alarm Inquiry Test (#138)	MIN/WRN[3]	OFF	test board UUCSS

Continued on next page

Table 10-667. DS1 Interface Circuit Pack Maintenance Error Log Entries — *Continued*

Error Type	Aux Data	Associated Test	Alarm Level	On/ Off Board	Test to Clear Value
1321	Any	Loss of Signal Alarm Inquiry Test (#138)	MIN/WRN[3]	OFF	test board UUCSS
1322	Any	Loss of Signal Alarm Inquiry Test (#138)	MINOR	ON	test board UUCSS
1323	Any	Loss of Signal Alarm Inquiry Test (#138)	MIN/WRN[3]	OFF	test board UUCSS
1324	Any	Loss of Signal Alarm Inquiry Test (#138)	WARNING	OFF	test board UUCSS
1400, 1401(s)	Any	Loss of Signal Alarm Inquiry Test (#138) and Echo Cancellation Test (#1420)	MINOR	ON	test board UUCSS
1537(t)	46082		MIN/WRN[3]	ON	
1538(u)	Any		MIN/WRN[3]	ON	
1793	Any	Blue Alarm Inquiry Test (#139)	MAJ/MIN/ WRN [4]	OFF	test board UUCSS
1794	Any	Blue Alarm Inquiry Test (#139)	MAJ/MIN/ WRN[4]	OFF	test board UUCSS
1795	Any	Blue Alarm Inquiry Test (#139)	MAJ/MIN/ WNG[4]	OFF	test board UUCSS
2049	Any	Red Alarm Inquiry Test (#140)	MIN/WRN[3]	OFF	test board UUCSS
2305	Any	Yellow Alarm Inquiry Test (#141)	MIN/WRN[3]	OFF	test board UUCSS
2306	Any	Yellow Alarm Inquiry Test (#141)	MIN/WRN[3]	OFF	test Board UUCSS
2561	Any	Major Alarm Inquiry Test (#142)	MIN/WRN[3]	OFF	test board UUCSS
2817		Minor Alarm Inquiry Test (#143)	MIN/WRN[3]	OFF	test board UUCSS
3073 to 3160 (v)	Any	Slip Alarm Inquiry Test (#144)	MIN/WRN[3]	OFF	test board UUCSS r 6
3330(w)	46083		MIN/WRN[3]	ON	
3585 to 3601 (x)	Any	Misframe Alarm Inquiry Test (#145)	MIN/WRN[3]	OFF	test board UUCSS r 6
3840(y)	Any	None			
3841(z)	4358				
3842(aa)	46097				

Continued on next page

Table 10-667. DS1 Interface Circuit Pack Maintenance Error Log Entries — *Continued*

Error Type	Aux Data	Associated Test	Alarm Level	On/ Off Board	Test to Clear Value
3843(ab)	46081				
3900(ac)	Any	CPE Loopback Jack Test (#1212)			
3901(ad)	Any	Far CSU Loopback Test (#1213)			
3902(ae)	Any	One-Way Span Test (#1214)			
3999(af)	Any	None			

1 Run the Short Test Sequence first. If all tests pass, run the Long Test Sequence. Refer to the appropriate test description and follow the recommended procedures.
2 If ports are assigned to the circuit pack, then a minor alarm is raised. If no ports are assigned to the circuit pack, then a warning alarm is raised. The alarm is raised after the circuit pack has been missing for a period of 15 minutes. Warning alarms are also raised against any ports administered on the circuit pack.
3 Minor alarms on this MO may be downgraded to warning alarms based on values set in the **set options** command.
4 Major alarms on this MO may be downgraded to minor or warning alarms based on values set in the **set options** command.

Notes:

a. **Error Type 1** — indicates that the circuit pack has totally stopped functioning or is not fully administered. The alarm is logged about 15 minutes after the circuit pack has been removed or 11-minutes after the SAKI Test (#53) fails.

   To be fully administered, a UDS1 circuit pack must meet all three of the following conditions:

   1. Have an entry in the circuit plan using the **change circuit pack** command
   2. Be administered using the **add ds1 UUCSS** command
   3. Be physically inserted into the correct slot

   If the circuit pack has an entry in the circuit plan and either of the other two conditions are *not* met, a MINOR alarm is logged. To resolve the error either:

   1. Make sure that all conditions for administration are met and that a functioning UDS1 circuit pack is inserted in the correct slot, or

2. Completely remove the UDS1-BD from the system using the following steps:
   a. Remove any administered DS1 trunks, access endpoints or PRI endpoints associated with the circuit pack from their trunk groups.
   b. Execute the **remove ds1 UUCSS** and **change circuit pack UUCSS** commands.

If all the administration conditions are met for this circuit pack and the red LED is still on, follow the instructions for *LED Alarms with Error Type 1* in Chapter 7.

b. **Error Type 18** — The UDS1 Interface circuit pack has been busied out by a **busyout board UUCSS** command.

c. **Error Type 23** — The UDS1-BD circuit pack is not completely administered. To be fully administered, the UDS1 circuit pack must:
   1. Have an entry in the circuit plan using the **change circuit pack** command,
   2. Be administered using the **add ds1 UUCSS** command, and
   3. Be physically inserted into the correct slot.

   A DS1 (UDS1-BD and DS1-BD) differs from most circuit packs in that inserting the circuit pack into the switch is not enough to make the board usable. It must also be administered with the **add ds1** command.

d. **Error Type 125: No Aux Data** — An incorrect circuit pack is inserted in the slot where the USD1 circuit pack is logically administered. To resolve this problem, either remove the incorrect circuit pack and insert the logically administered circuit pack, OR use the **change circuit-pack** command to re-administer this slot to match the circuit pack inserted.

   Aux Data 3 — The 24/32-channel option jumper setting on the circuit pack does not match the option set on the **DS1 Circuit Pack** administration form. The circuit pack must be physically removed to see the setting of the jumper.

e. **Error Type 257** — is associated with the Common Port Circuit Pack Maintenance Test. Refer to XXX-BD (Common Port Circuit Pack) Maintenance documentation for details.

f. **Error Type 513** — The UDS1 Interface circuit pack has detected a transient hardware problem. The value in the Aux Data field indicates the type of hardware problem:

Aux Data	Problem
4352	External RAM failure
4353	Internal RAM failure
4355	Internal ROM failure

If the UDS1 board detects only one of these hardware problems, then the error will disappear when none of these faults are detected for 10 minutes. If the same Aux Data value is logged more than once in a 24 hour period, the circuit pack should be replaced.

g. **Error Type 514** — LAN External RAM Error. This error occurs when there is a hardware fault in the PPE external RAM. The RAM is used for message buffering to and from the Packet Bus. This error should not occur frequently. If it does (10 times within 30 minutes), the circuit pack should be replaced.

h. **Error Type 769** —Transmit FIFO Underflow Error. This error occurs when the circuit pack cannot find the “end of frame” bit when transmitting a frame to the Packet Bus. An alarm is raised if this error occurs three times within 10 minutes. Clear the alarm using the following commands: **busyout board UUCSS**, **reset board UUCSS**, **test board UUCSS long**, **release board UUCSS**. If the error recurs within 10 minutes, replace the circuit pack.

i. **Error Type 770** — Unable to Write LAN Translation RAM Error. This error occurs when a call is aborted because there are no available translation RAM locations for the call connection attempt. An alarm is raised if this error occurs two times within 10 minutes. Clear the alarm using the following commands: **busyout board UUCSS**, **reset board UUCSS**, **test board UUCSS long**, **release board UUCSS**. If the error recurs within 10 minutes, replace the circuit pack.

j. **Error Type 1300** — CSU Module/T1 Sync Splitter missing or E1 Synchronization Splitter (E1SS) missing.

CSU Module/T1 Sync Splitter missing: The `Near-End CSU Type` field on the **add ds1** form has been administered as `integrated` but the 120A1 CSU Module or the 401A T1 Sync Splitter is not physically connected (or is improperly connected) to the UDS1 board on the back of the port carrier.

If using the 120A1 CSU Module or the 401A T1 Sync Splitter, plug (or replug) the CSU Module/T1 Sync Splitter into the UDS1 circuit pack’s connector on the I/O connector panel on back of the carrier. Otherwise, change the `Near-End CSU Type` field using the **change ds1** form to `other`.

If this error remains after plugging the CSU Module/T1 Sync Splitter into the board’s connector, there could be a problem with the I/O connector panel.

E1 Synchronization Splitter missing: The `E1 Sync-Splitter?` field on the **add ds1** form has been administered as `y`, but the 402A or 403A E1 Synchronization Splitter is not physically connected (or is improperly connected) to the UDS1 board on the back of the port carrier.

If using the 402A or 403A E1 Synchronization Splitter, plug (or replug) the E1SS into the UDS1 circuit pack's connector on the I/O connector panel on back of the carrier. Otherwise, change the `E1 Sync-Splitter?` field using the **change ds1** form to `n`.

If this error remains after plugging the E1SS into the board's connector, there could be a problem with the I/O connector panel.

k. **Error Type 1301** — CSU Module/T1 Sync Splitter not expected or E1 Synchronization Splitter not expected.

CSU Module/T1 Sync Splitter not expected: The 120A1 CSU Module or the 401A T1 Sync Splitter is physically connected to the UDS1 board on the back of the port carrier but the `Near-End CSU Type` field on the **add ds1** form has not been administered as `integrated`.

If the 120A1 CSU Module or the 401A T1 Sync Splitter is to be used, use the **change ds1** command to change the `Near-End CSU Type` field to `integrated`. Otherwise, physically remove the 120A1 CSU Module or the 401A T1 Sync Splitter from the back of the port carrier.

E1 Synchronization Splitter not expected: The 402A or 403A E1 Synchronization Splitter is physically connected to the UDS1 board on the back of the port carrier but the `E1 Sync-Splitter?` field on the **add ds1** form has not been administered as `y`.

If the 402A or 403A E1 Synchronization Splitter is to be used, use the **change ds1** command to change the `E1 Sync-Splitter?` field to `y`. Otherwise, physically remove the 402A or 403A E1 Synchronization Splitter from the back of the port carrier.

l. **Error Type 1302** — DS1 configuration error. Attempting to use the 120A1 CSU Module with a UDS1 circuit pack that is configured for 32-channel (2.048 Mbps) operation. The CSU Module only works with a DS1 board configured for 24-channel (1.544 Mbps) operation in the United States of America.

m. **Error Type 1303** — DS1 circuit pack suffix incorrect for CSU Module/T1 Sync Splitter or for E1 Synchronization Splitter.

DS1 circuit pack suffix incorrect for CSU Module/T1 Sync Splitter: The `Near-End CSU Type` field on the **add ds1** form has been administered as `integrated` but the DS1 circuit pack is not a TN464F or later suffix UDS1 board.

If the 120A1 CSU Module or the 401A T1 Sync Splitter is to be used, remove the circuit pack and replace it with a TN464F or later suffix board. Otherwise, use the **change ds1** command to change the `Near-End CSU Type` field to `other`.

DS1 circuit pack suffix incorrect for E1 Synchronization Splitter: The `E1 Sync-Splitter?` field on the **add ds1** form has been administered as `y` but the DS1 circuit pack is not a TN464F or later suffix UDS1 board.

If the 402A or 403A E1 Synchronization Splitter is to be used, remove the circuit pack and replace it with a TN464F or later suffix board. Otherwise, use the **change ds1** command to change the `E1 Sync-Splitter?` field to `n`.

n. **Error Type 1310** — BLB failure. This error occurs when the DS1 Board Loopback (BLB) demand test fails. Repeat the test using the commands **busyout board UUCSS, test ds1-loop UUCSS ds1/csu-loopback-tests, release board UUCSS**. If the BLB test continues to fail, then the TN464F circuit pack needs to be replaced.

o. **Error Type 1311** — ELB failure. This error occurs when the Equipment Loopback (ELB) test fails for the Integrated CSU (I-CSU) Module/T1 Sync Splitter or for the 402A or 403A E1 Synchronization Splitter. This test is executed by the I-CSU/E1SS during I-CSU/E1SS power-up/reset (i.e.- UDS1 board physically inserted and 120A1 CSU Module or the 401A T1 Sync Splitter, or the 402A or 403A E1SS is already installed) or when the 120A1 CSU Module or the 401A T1 Sync Splitter, or the 402A or 403A E1SS is plugged on to an already initialized UDS1 DS1 board.

NOTE:
For the **I-CSU/T1 Sync Splitter only**, the ELB test is also executed as part of the command **test ds1-loop UUCSS ds1/csu-loopback-tests**. Attempt to clear the alarm using the commands **busyout board UUCSS, test ds1-loop UUCSS ds1/csu-loopback-tests, release board UUCSS**. If the ELB test continues to fail, then either the UDS1 board, the CSU Module, or the I/O cable between the backplane and the CSU module (or any combination thereof) has failed. Attempt to isolate where the failure is occurring by re-executing the test and by replacing one piece of hardware at a time.

p. **Error Type 1312** — RLB failure. This error occurs when the Repeater Loopback (RLB) test fails for the Integrated CSU (I-CSU) Module/T1 Sync Splitter or for the 402A or 403A E1 Synchronization Splitter. This test is executed by the I-CSU/E1SS during I-CSU/E1SS power-up/reset (i.e.- UDS1 board physically inserted and 120A1 CSU Module or the 401A T1 Sync Splitter, or the 402A or 403A E1SS is already installed) or when the 120A1 CSU Module or the 401A T1 Sync Splitter, or the 402A or 403A E1SS is plugged on to an already initialized DS1 board.

NOTE:
For the **I-CSU/T1 Sync Splitter only**, the RLB test is also executed as part of the command **test ds1-loop UUCSS ds1/csu-loopback-tests**. Attempt to clear the alarm using the commands **busyout board UUCSS, test ds1-loop UUCSS ds1/csu-loopback-tests, release board UUCSS**. If the RLB test continues to fail, then the CSU Module needs to be replaced.

q. **Error Type 1313** — CPE Loopback Jack deactivation error. This error occurs when the UDS1 circuit pack could not deactivate a CPE Loopback Jack on power-up/reset or upon software request.

   Attempt to clear the alarm using the commands **busyout board UUCSS, test ds1-loopback UUCSS end-loopback/span-test, release board UUCSS**. If the attempt to deactivate the CPE Loopback Jack continues to fail, other steps must be taken to deactivate the loopback.

r. **Error Type 1314** — Far CSU Loopback deactivation error. This error occurs when the UDS1 circuit pack could not deactivate a far-end CSU loopback on power-up/reset or upon software request.

   Attempt to clear the alarm using the commands **busyout board UUCSS, test ds1-loop UUCSS end-loopback/span-test, release board UUCSS**. If the attempt to deactivate the Far CSU loopback continues to fail, then escalate the problem.

s. **Error Types 1400, 1401** — Echo Cancellation errors are logged when:

   - Error 1400 - Echo canceller function failed. The Echo Canceller Function Test, which is executed by firmware, failed.
   - Error 1401 - Echo canceller memory failed. The Echo Canceller Memory Test, which is executed by firmware, failed.

   Echo Cancellation is no longer being supplied by the board. Clear the alarm using the following commands: **busyout board UUCSS**, **test board UUCSS long**, **release board UUCSS**. If Test #1420 (Echo Canceler Test) fails, replace the circuit pack.

t. **Error type 1537** — LAN Bus Timeout Error. This error occurs when the circuit pack transmits too many bytes on the LAN bus for a single frame. This condition may be caused by an on-board fault or by faulty data received on one of the circuit pack's external ports. If any of the ports on this circuit pack are alarmed, refer to the repair procedures for those maintenance objects.

   If the error occurs three times within 10 minutes, the board is isolated from the Packet Bus and the board alarmed. To clear the alarm and restore the board to the Packet Bus, use the commands **busyout board UUCSS**, **reset board UUCSS**, **test board UUCSS long**, **release board UUCSS**.

   If the problem persists, and there are no PKT-BUS alarms or port alarms, then replace the circuit pack.

u. **Error Type 1538** — The hyperactive circuit pack is out-of-service and may exhibit one or more of the following symptoms:

- The common circuit pack level tests such as Test #50 and/or Test #52 abort with error code 2000
- The tests run on the ports of this circuit pack return a NO-BOARD result
- A busyout/release of the circuit pack has no affect on test results
- A **list configuration** command shows that the circuit pack and ports are properly installed

The circuit pack is isolated from the system and all trunks or ports on this circuit pack are placed into the out-of-service state. The system will try to restore the circuit pack within 20-30 minutes. When no faults are detected for 20-30 minutes, the UDS1 Interface circuit pack is restored to normal operation. All trunks or ports of the UDS1 Interface circuit pack are then returned to the in-service state.

If the board is not restored to normal operation, or the error recurs after the board was restored to normal operation, escalate the problem.

v. **Error Types 3073 to 3160** — For later releases of G3V4 and beyond, only Error Type 3073 shows that this board is receiving slips and the AUX data shows the last slip count reported.

w. **Error Type 3330** — LAN Critical Error. A critical failure has been detected in the Packet Bus interface of the circuit pack. This failure may be due to an on-board fault or a Packet Bus fault. If the Packet Bus is alarmed, refer to the PKT-BUS Maintenance documentation for recommended repair procedures.

This error isolates the board from the Packet Bus and raises an alarm. If the Packet Bus is not alarmed, enter the commands **busyout board UUCSS**, **reset board UUCSS**, **test board UUCSS**, **release board UUCSS**. This should clear the alarm and restore the board to the Packet Bus.

If the problem persists, and there are no PKT-BUS alarms, then replace the circuit pack.

x. **Error Types 3585 to 3601** — For later releases of G3V4 and beyond, only Error Type 3585 shows that this board is receiving misframes, and the AUX Data shows the last misframe count reported.

y. **Error Type 3840** — is not service-affecting. No action is required. These errors are reported by the circuit pack when it receives a bad control channel message from the switch. The auxiliary data identifies the following error events:

Aux Data	Event
4096	Bad major heading
4097	Bad port number
4098	Bad data
4099	Bad sub-qualifier
4100	State inconsistency
4101	Bad logical link

z. **Error Type 3841** — The UDS1 Interface circuit pack has detected a transient hardware logic error (for example, program logic inconsistency). This error will disappear when no faults are detected for 100 minutes. The value in Aux Data indicates the type of hardware problem.

aa. **Error Type 3842** — Bad Translation RAM Location Found Error. This error is not service-affecting. No action is required. A Bad Translation RAM is detected, but the call continues by using another translation location.

ab. **Error Type 3843** — LAN Receive Parity Error. This error occurs when the circuit pack detects an error in a received frame from the Packet Bus. These errors are most likely caused by a Packet Bus problem, but may be due to a circuit pack fault.

Refer to the PKT-BUS Maintenance documentation to determine if the problem is isolated to this circuit pack or if the problem is caused by Packet Bus faults.

ac. **Error Type 3900** — is used to give status information on a CPE Loopback Jack Test. The value in the Aux Data field indicates the status of the loopback test.

Aux Data	Test Status
1	Currently running
2	Failed because loopback could not be activated
3	Failed because test pattern could not be detected
4	Terminated

ad. **Error Type 3901** — is used to give status information on a Far CSU Loopback Test. The value in the Aux Data field indicates the status of the loopback test.

Aux Data	Test Status
1	Currently running
2	Failed because loopback could not be activated
3	Failed because test pattern could not be detected
4	Terminated

ae. **Error Type 3902** — is used to give status information on a One-Way Span Test. The value in the Aux Data field indicates the status of the span test.

Aux Data	Test Status
1	Currently running
2	Failed because test could not be activated
3	Test pattern was not received from the far end
4	Terminated

af. **Error Type 3999** — indicates that the circuit pack sent a large number of control channel messages to the switch within a short period of time. If Error Type 1538 is also present, then the circuit pack was taken out-of-service due to hyperactivity. If Error Type 1538 is not present, then the circuit pack has not been taken out-of-service, but it has generated 50% of the messages necessary to be considered hyperactive. This may be completely normal during heavy traffic periods. However, if this error type is logged when the circuit pack is being lightly used, it may indicate a problem with the circuit pack or the equipment attached to it.

System Technician-Demanded Tests: Descriptions and Error Codes

Investigate tests in the order they are presented in Table 10-668 on page 10-1855. By clearing error codes associated with the *Echo Cancellation Test,* for example, you may also clear errors generated from other tests in the testing sequence.

Table 10-668. System Technician-Demanded Tests

Order of Investigation	Short Test Sequence	Long Test Sequence	Reset Board Sequence	test ds1-loop	D/ ND[1]
Echo Cancellation Test (#1420)		X			D
NPE Connection Audit Test (#50)		X			ND
Control Channel Loop Test (#52)		X			ND
Loss of Signal Alarm Inquiry Test (#138)	X	X			ND
Blue Alarm Inquiry Test (#139)	X	X			ND
Red Alarm Inquiry Test (#140)	X	X			ND
Yellow Alarm Inquiry Test (#141)	X	X			ND
Major Alarm Inquiry Test (#142)	X	X			ND
Minor Alarm Inquiry Test (#143)	X	X			ND
Slip Alarm Inquiry Test (#144)	X	X			ND
Misframe Alarm Inquiry Test (#145)	X	X			ND
Translation Update Test (#146)	X	X			ND
ICSU Status LEDs Test (#1227)	X	X			ND
SAKI Sanity Test (#53)			X		D
Internal Looparound Test (#135)			X		D
DS1/CSU Loopback Tests: DS1 Board Loopback Test (#1209) CSU Equipment Loopback Test (#1210) CSU Repeater Loopback Test (#1211)				 X X X	 D D D
CPE Loopback Jack Test (#1212)				X	D
Far CSU Loopback Test (#1213)				X	D
One-Way Span Test (#1214)				X	D
Inject Single Bit Error (#1215)				X	D
End Loopback/Span Test (#1216)				X	D

1 D = Destructive; ND = Nondestructive

NPE Connection Audit Test (#50)

The system sends a message to the on-board microprocessor to update the network connectivity translation for the SCOTCH-NPE chip on the circuit pack.

Table 10-669. TEST #50 NPE Connection Audit Test

Error Code	Test Result	Description/Recommendation
None 2100	ABORT	System resources required for this test are not available. 1. Retry the command at 1-minute intervals a maximum of 5 times.
1019	ABORT	The test aborted because a test was already running on the port. 1. Retry the command at 1-minute intervals for a maximum of 5 times.
	FAIL	Internal system error 1. Retry the command at 1-minute intervals a maximum of 5 times.
	PASS	The circuit pack's SCOTCH-NPE chip has been updated with its translation.
0	NO BOARD	The test could not relate the internal ID to the port (no board). This could be due to incorrect translations, no board is inserted, an incorrect board is inserted, or an insane board is inserted. 1. Ensure that the board translations are correct. Execute the **add ds1 UUCSS** command to administer the UDS1 interface if it is not already administered. 2. If the board was already administered correctly, check the error log to determine whether the board is hyperactive. If this is the case, the board is shut down. Reseating the board will re-initialize the board. 3. If the board was found to be correctly inserted in step 1, then issue the **busyout board** command. 4. Issue the **reset board** command. 5. Issue the **release busy board** command. 6. Issue the **test board long** command. This should re-establish the linkage between the internal ID and the port.

Control Channel Looparound Test (#52)

This test queries the circuit pack for its circuit pack code and vintage and verifies its records.

Table 10-670. TEST #52 Control Channel Looparound Test

Error Code	Test Result	Description/Recommendation
None 2100	ABORT	System resources required for this test are not available. 1. Retry the command at 1-minute intervals a maximum of 5 times.
	FAIL	The circuit pack failed to return the circuit pack code or vintage. 1. Retry the command a maximum of 5 times. 2. If the problem continues, and if the circuit pack is one of the Port circuit packs, replace the circuit pack. Otherwise, if the circuit pack is part of the SPE, use the procedure described in *Replacing SPE Circuit Packs* in Chapter 5. 3. Retry the command a few times a maximum of 5 times.
	PASS	Communication with this circuit pack is successful.
0	NO BOARD	The test could not relate the internal ID to the port (no board). This could be due to incorrect translations, no board is inserted, an incorrect board is inserted, or an insane board is inserted. 1. Ensure that the board translations are correct. Execute the **add ds1 UUCSS** command to administer the UDS1 interface if it is not already administered. 2. If the board was already administered correctly, check the error log to determine whether the board is hyperactive. If this is the case, the board is shut down. Reseating the board will re-initialize the board. 3. If the board was found to be correctly inserted in step 1, then issue the **busyout board** command. 4. Issue the **reset board** command. 5. Issue the **release busy board** command. 6. Issue the **test board long** command. This should re-establish the linkage between the internal ID and the port.

SAKI Sanity Test (#53)

This test is destructive.

This test resets the circuit pack. The test is highly destructive and can only be initiated by a system technician-demanded **reset board UUCSS** command.

Table 10-671. TEST #53 SAKI Sanity Test

Error Code	Test Result	Description/Recommendation
None	ABORT	System resources required for this test are not available. 1. Retry the **reset board** command at 1-minute intervals a maximum of 5 times.
1005	ABORT	Wrong circuit pack configuration to run this test. This error applies only to DS1 Interface circuit packs. It means the DS1 Interface circuit pack is providing timing for the system, and therefore, it cannot be reset without major system disruptions. 1. If the circuit pack needs to be reset, then set synchronization to another DS1 Interface circuit pack or to the Tone-Clock circuit pack and try again. Refer to "SYNC (Synchronization)" Maintenance documentation.
1015	ABORT	Port is not out-of-service. 1. Busyout the circuit pack. 2. Execute the **reset board** command again.
2100	ABORT	System resources required for this test are not available. 1. Retry the **reset board** command at 1-minute intervals a maximum of 5 times.
1	FAIL	The circuit pack failed to reset.

Continued on next page

Table 10-671. TEST #53 SAKI Sanity Test — *Continued*

Error Code	Test Result	Description/Recommendation
2	FAIL	The circuit pack failed to restart. 1. Execute the **reset board** command again. 2. If the problem persists, replace the circuit pack.
	PASS	The circuit pack initializes correctly. 1. Run the Short Test Sequence.
0	NO BOARD	The test could not relate the internal ID to the port (no board). This could be due to incorrect translations, no board is inserted, an incorrect board is inserted, or an insane board is inserted. 1. Ensure that the board translations are correct. Execute the **add ds1 UUCSS** command to administer the UDS1 interface if it is not already administered. 2. If the board was already administered correctly, check the error log to determine whether the board is hyperactive. If this is the case, the board is shut down. Reseating the board will re-initialize the board. 3. If the board was found to be correctly inserted in step 1, then issue the **busyout board** command. 4. Issue the **reset board** command. 5. Issue the **release busy board** command. 6. Issue the **test board long** command. This should re-establish the linkage between the internal ID and the port.

Internal Looparound Test (#135)

This test is destructive.

The Internal Looparound Test is run by looping the transmitted DS1 bit stream back into the UDS1's board receiver. The loop occurs just before the DS1 facility interface. The test is highly destructive and can only be initiated by a system technician-demanded **reset board UUCSS** command.

All trunks or ports on the UDS1 Interface circuit pack must be busied out using the system technician **busyout board** command before running the Internal Looparound Test. When the Internal Looparound Test is initiated, maintenance software sends appropriate messages to the UDS1 Interface circuit pack to start the test. The test uses the Tone Generator and Tone Detector to exercise a bit

pattern consistency test for all ports. If the transmitted and received bit patterns on a trunk or port are different, the test fails.

When the test completes, the maintenance software sends a stop loop around message to the UDS1 Interface circuit pack to put the circuit pack back into the normal operation mode. All trunks or ports of the UDS1 Interface circuit pack are restored to the in-service state after the **release board** command is entered.

Table 10-672. TEST #135 Internal Looparound Test

Error Code	Test Result	Description/Recommendation
1002	ABORT	The system could not allocate time slots for the test. The system may be under heavy traffic conditions or it may have time slots out-of-service due to TDM-BUS errors. 1. If system has no TDM-BUS errors and is not handling heavy traffic, repeat test at 1-minute intervals a maximum of 5 times.
1003	ABORT	The system could not allocate a tone receiver for the test. The system may be oversized for the number of Tone Detectors present or some Tone Detectors may be out-of-service. 1. Resolve any TTR-LEV errors. 2. Resolve any TONE-PT errors. 3. If neither condition exists, retry the **reset board** command at 1-minute intervals a maximum of 5 times.
1004	ABORT	Received an incoming call on a port of the UDS1 circuit pack during the test. 1. Enter **busyout board UUCSS** to put all trunks or ports of the UDS1 Interface circuit pack to out-of-service state. 2. Retry **reset board** at 1-minute intervals a maximum of 5 times.
1015	ABORT	Ports on the UDS1 Interface circuit pack have not been busied out to out-of-service. 1. Enter **busyout board UUCSS** to put all trunks or ports of the UDS1 Interface circuit pack into the out-of-service state. 2. Retry the **reset board** command.

Continued on next page

Table 10-672. TEST #135 Internal Looparound Test — *Continued*

Error Code	Test Result	Description/Recommendation
1039	ABORT	The UDS1 Interface circuit pack is providing timing for the system. Therefore, it cannot be reset without major system disruption. If the UDS1 Interface circuit pack needs to be tested, set the synchronization reference to another UDS1 Interface circuit pack or to the Tone-Clock circuit pack via the following command sequence: 1. Issue the **disable synchronization-switch** command. 2. Issue the **set synchronization UUCSS** command. 3. Issue **enable synchronization-switch**.
2000	ABORT	Response to the test request was not received within the allowable time period. If Error Type 1538 is present in the Error Log, follow the maintenance strategy recommended for this error type.
2012	ABORT	Internal system error 1. Retry the **reset board** command at 1-minute intervals a maximum of 5 times.
2100	ABORT	Could not allocate the necessary system resources to run this test. 1. Retry the **reset board** command at 1-minute intervals for a maximum of 5 times.
	FAIL	The UDS1 Interface circuit pack failed in the Internal Looparound Test. If the UDS1 connects to a T1 network facility or another switch: 1. Retry **reset board** at 1-minute intervals a maximum of 5 times. 2. Enter **list measurement ds1-log UUCSS** to read the error seconds measurement. 3. Verify that both endpoints of the DS1 link are administered using the same signaling mode, framing mode, and line coding. 4. Check the physical connectivity of DS1 Interface circuit packs and cable. 5. Replace the local UDS1 Interface circuit pack and repeat the test. 6. Contact T1 Network Service to diagnose the remote DS1 endpoint.

Continued on next page

Table 10-672. TEST #135 Internal Looparound Test — *Continued*

Error Code	Test Result	Description/Recommendation
	FAIL *(cont'd.)*	If the UDS1 connects to a line-side terminating device such as a PRI terminal adapter: 1. Retry the **reset board** command at 1-minute intervals a maximum of 5 times. 2. Enter the **list measurement ds1-log UUCSS** command to read the error seconds measurement. 3. Verify that the switch DS1 and the line-side terminating device are administered using the same signaling mode, framing mode, and line coding. 4. Investigate the maintenance status of the line-side terminating device. Obtain the error seconds measurement on the terminating device (if possible). Refer to the line-side terminating device operating manual for information. 5. Check the physical connection of the UDS1 Interface circuit pack to the terminating device. Check premise distribution system (or intra-premise wiring) for physical connection failures. If the error seconds measurement is severe, investigate premise distribution system wiring for noise and distance limitation. 6. Replace the local UDS1 Interface circuit pack and repeat the test. 7. Contact the vendor of the line-side terminating device to diagnose the equipment.

Continued on next page

Table 10-672. TEST #135 Internal Looparound Test — *Continued*

Error Code	Test Result	Description/Recommendation
	PASS	All administered trunks or ports of the UDS1 Interface circuit pack pass the Internal Looparound Test. The bit pattern consistency test is executed successfully over the path that covers a DS1 port, cable, and the external NCTE device.
0	NO BOARD	The test could not relate the internal ID to the port (no board). This could be due to incorrect translations, no board is inserted, an incorrect board is inserted, or an insane board is inserted. 1. Ensure that the board translations are correct. Execute the **add ds1 UUCSS** command to administer the UDS1 interface if it is not already administered. 2. If the board was already administered correctly, check the error log to determine whether the board is hyperactive. If this is the case, the board is shut down. Reseating the board will re-initialize the board. 3. If the board was found to be correctly inserted in step 1, then issue the **busyout board** command. 4. Issue the **reset board** command. 5. Issue the **release busy board** command. 6. Issue the **test board long** command. This should re-establish the linkage between the internal ID and the port.

Loss of Signal Alarm Inquiry Test (#138)

This test verifies the synchronization status, echo cancellation, and continuity of the DS1 link. The Loss of Signal alarm indicates that the UDS1 Interface circuit pack is unable to derive the synchronization clock from the DS1 facility. When the UDS1 Interface circuit pack detects a Loss of Signal alarm, it stops providing the synchronization clock for the system, if it is administered as a timing source, and transmits a Yellow alarm to the remote DS1 endpoint.

When the Loss of Signal alarm is confirmed, maintenance software places all trunks or ports of the UDS1 Interface circuit pack into the out-of-service state. The inquiry test will run every 10 minutes until the loss of signal has been restored.

The UDS1 Interface circuit pack raises a Loss of Signal alarm after the signal has been lost for about 1 second. It will not retire the alarm until the signal has returned for about 10 seconds.

120A1 CSU Module/Sync Splitter

This test is also used to maintain the Avaya 120A1 CSU Module or the 401A T1 Sync Splitter, and the 402A or 403A E1 Synchronization Splitter. The CSU Module, when combined with the functionality provided by the UDS1 circuit pack, provides functionality equivalent to an external stand-alone Avaya ESF T1 CSU. The combination of the UDS1 and 120A1 CSU Module is known as an Enhanced Integrated CSU (I-CSU).

The 401A T1 Synchronization Splitter, when combined with the functionality provided by the UDS1 circuit pack, allows an ATM switch to derive its timing from a T1 connected to the UDS1 in the DEFINITY.

The 402A or 403A E1 Synchronization Splitter, when combined with the functionality provided by the UDS1 circuit pack, allows an ATM switch to derive its timing from an E1 connected to the UDS1 in the DEFINITY.

If a UDS1 circuit pack detects certain I-CSU/Sync Splitter hardware errors, it notifies maintenance. When the maintenance subsystem receives notification of the I-CSU/Sync Splitter error, it executes this Loss of Signal Alarm Inquiry, Test #138. The test, in addition to querying for a Loss Of Signal alarm condition, also queries the UDS1 board to confirm the I-CSU/Sync Splitter error. A Minor or Warning alarm is raised depending on the severity of the I-CSU/Sync Splitter error. The trunks on the board may be taken out of service if the I-CSU/Sync Splitter error is deemed serious.

If a Loss Of Signal alarm and an I-CSU/Sync Splitter error co-exist, the Loss Of Signal alarm condition takes priority, and the board and all trunks on the board are put in the out-of-service state. Errors are logged, however, for both.

When the maintenance subsystem receives notification that the I-CSU/Sync Splitter hardware error condition no longer exists, maintenance will restore the board and all trunks to their previous service state, if the alarm can be cleared (no other I-CSU/Sync Splitter errors or Loss Of Signal alarm exist).

Echo Cancellation

If the TN464GP/TN2464BP or later suffix UDS1 firmware detects a serious echo canceller hardware error, it notifies maintenance software. When the maintenance subsystem receives notification of the echo cancellation error, it executes this *Loss Of Signal Alarm Inquiry* test.

This test, in addition to querying for a loss of signal condition and ICSU errors, also queries the TN464GP/TN2464BP to confirm the echo canceller error. A minor alarm is raised if the error is confirmed. The trunks of the board remain in-service since the board is still functional except for the echo cancellation capability.

If a loss of signal condition co-exists with ICSU and/or echo canceller errors, the loss of signal condition takes priority, and the board and all trunks on the board are put in the out-of-service state. Errors are logged, however, for each error type.

When the maintenance subsystem receives notification that the echo canceller hardware error condition no longer exists, the maintenance subsystem restores the board and all trunks to their previous service state, if the alarm can be cleared (no other ICSU errors or loss of signal conditions exist).

Table 10-673. TEST #138 Loss of Signal Alarm Inquiry Test

Error Code	Test Result	Description/Recommendation
	ABORT	Internal system error 1. Retry the command at 1-minute intervals for a maximum of 5 times.
2000	ABORT	Response to the test was not received within the allowable time period. This may be due to hyperactivity. Error Type 1538 in the error log indicates hyperactivity. The hyperactive circuit pack is out of service and one or more of the following symptoms may be exhibited. 1. The UDS1-BD tests (such as Test #138 and Test #139) are aborting with error code 2000. 2. The tests run on the ports of this circuit pack are returning a no board result. 3. A **busyout** or a **release** has no affect on the test results. 4. A **list config** shows that the circuit pack and the ports are properly installed. When hyperactivity occurs, the circuit pack is isolated from the system, and all of the trunks for this circuit pack are placed into the out of service state. The system will try to restore the circuit pack within 15 minutes. When no faults are detected for 15 minutes, the UDS1 interface circuit pack is restored to normal operation. All of the trunks for the UDS1 interface circuit pack are then returned to the in service state. Hyperactivity is often caused by the associated facility. In such a case, faults (such as slips, misframes, or blue alarms) would be entered in the error log. In addition, many hardware errors would be logged against the associated trunk circuits. If the facility is OK and the error occurs again after 15 minutes, replace the circuit pack.
2100	ABORT	Could not allocate the necessary system resources to run this test. 1. Retry the command at 1-minute intervals for a maximum of 5 times.

Continued on next page

Table 10-673. TEST #138 Loss of Signal Alarm Inquiry Test — *Continued*

Error Code	Test Result	Description/Recommendation
	FAIL	UDS1 Interface circuit pack detects a Loss of Signal alarm. The physical link is broken or the remote DS1 endpoint is down. All trunks or ports of this UDS1 interface circuit pack are out-of-service. If the UDS1 Interface circuit pack is designated as the supplier of the system synchronization source, then the system synchronization maintenance will adopt a source elsewhere. Refer to the "SYNC (Synchronization)" section in this chapter for details. If the UDS1 connects to a T1 network facility: 1. Check the physical connection of the UDS1 Interface circuit pack and the cable. If a CSU Module or a Sync Splitter is physically connected to a UDS1-BD board on the back of the port carrier, check the physical connection of the CSU Module/Sync Splitter and make sure the Network Interface cable is plugged into the CSU Module's/Sync Splitter's NETWORK jack. 2. If the UDS1 Interface circuit pack connects to a T1 facility, call the vendor of the T1 carrier to diagnose the remote DS1 endpoint. If the UDS1 Interface circuit pack connects directly to a switch, call the system technician of the remote switch to diagnose the DS1 endpoint. If the UDS1 connects to a line-side terminating device such as a PRI terminal adapter: 1. Check the physical connection of the UDS1 Interface circuit pack to the terminating device. Check premise distribution system (or intra-premise wiring) for physical connection failures. If a CSU Module or Sync Splitter is physically connected to a UDS1-BD board on the back of the port carrier, check the physical connection of the CSU Module/Sync Splitter and make sure the Network Interface cable is plugged into the CSU Module's/Sync Splitter's NETWORK jack. 2. Contact the vendor of the line-side terminating device to diagnose the equipment.

Continued on next page

Table 10-673. TEST #138 Loss of Signal Alarm Inquiry Test — *Continued*

Error Code	Test Result	Description/Recommendation
1300	FAIL	The CSU Module/T1 Sync Splitter or the E1 Sync Splitter is missing. The CSU Module/T1 Sync Splitter is missing: The `Near-End CSU Type` field on the **add ds1** form has been administered as `integrated` but the 120A1 CSU Module or the 401A T1 Sync Splitter is not physically connected to the UDS1 board on the back of the port carrier. 1. If using the 120A1 CSU Module or the 401A T1 Sync Splitter, plug the CSU Module/T1 Sync Splitter into the UDS1 circuit pack's connector on the I/O connector panel on back of the carrier. Otherwise, change the `Near-End CSU Type` field using the **change ds1** form to `other`. 2. Run the test again. The E1 Sync Splitter is missing: The `E1 Sync-Splitter?` field on the **add ds1** form has been administered as `y` but the 402A or 403A E1 Sync Splitter is not physically connected to the UDS1 board on the back of the port carrier. 1. If using the 402A or 403A E1 Synchronization Splitter, plug the E1SS into the UDS1 circuit pack's connector on the I/O connector panel on back of the carrier. Otherwise, change the `E1 Sync-Splitter?` field using the **change ds1** form to `n`. 2. Run the test again.

Continued on next page

Table 10-673. TEST #138 Loss of Signal Alarm Inquiry Test — *Continued*

Error Code	Test Result	Description/Recommendation
1301	FAIL	The 120A1 CSU Module or the 401A T1 Sync Splitter, or the 402A or 403A E1 Synchronization Splitter is not expected. The 120A1 CSU Module or the 401A T1 Sync Splitter is not expected: The 120A1 CSU Module/T1 Sync Splitter is physically connected to the UDS1 board on the back of the port carrier but the `Near-End CSU Type` field on the **add ds1** form has not been administered as `integrated`. 1. If the 120A1 CSU Module/T1 Sync Splitter is to be used, use the **change ds1** command to change the `Near-End CSU Type` field to `integrated`. Otherwise, physically remove the 120A1 CSU Module/T1 Sync Splitter from the back of the port carrier. 2. Run the test again. The 402A or 403A E1 Synchronization Splitter is not expected: The 402A or 403A E1 Synchronization Splitter is physically connected to the UDS1 board on the back of the port carrier but the `E1 Sync-Splitter?` field on the **add ds1** form has not been administered as `y`. 1. If the 402A or 403A E1 Synchronization Splitter is to be used, use the **change ds1** command to change the `E1 Sync-Splitter?` field to `y`. Otherwise, physically remove the 402A or 403A E1 Synchronization Splitter from the back of the port carrier. 2. Run the test again.
1302	FAIL	Attempting to use the 120A1 CSU Module with a UDS1 circuit pack that is configured for 32-channel (2.048 Mbps) operation. The CSU Module only works with a DS1 board configured for 24-channel (1.544 Mbps) operation in the United States of America. 1. If the 120A1 CSU Module is to be used, physically remove the UDS1 circuit pack and reconfigure for 24-channel (1.544 Mbps) operation. 2. Reinsert the circuit pack and run the test again.

Continued on next page

Table 10-673. TEST #138 Loss of Signal Alarm Inquiry Test — *Continued*

Error Code	Test Result	Description/Recommendation
1303	FAIL	The DS1 circuit pack Suffix is incorrect for CSU Module/T1 Sync Splitter or E1 Sync Splitter administration. The DS1 circuit pack Suffix is incorrect for CSU Module/T1 Sync Splitter administration. The `Near-End CSU Type` field on the **add ds1** form has been administered as `integrated` but the DS1 circuit pack is not a TN464F or later suffix UDS1 board. 1. If the CSU Module/T1 Sync Splitter is to be used, and the `Near-End CSU Type` field is set to `integrated` to allow for CSU Module/T1 Sync Splitter administration, remove the circuit pack and replace it with a TN464F or later suffix board. Otherwise use the **change ds1** command to change the `Near-End CSU Type` field to `other`. The DS1 circuit pack Suffix is incorrect for E1 Sync Splitter administration. The `E1 Sync-Splitter?` field on the **add ds1** form has been administered as `y` but the DS1 circuit pack is not a TN464F or later suffix UDS1 board. 1. If the E1 Sync Splitter is to be used, and the `E1 Sync-Splitter?` field is set to `y` to allow for E1SS administration, remove the circuit pack and replace it with a TN464F or later suffix board. Otherwise use the **change ds1** command to change the `E1 Sync-Splitter?` field to `n`.
1310	FAIL	The DS1 Board Loopback (BLB) demand test (#1209) failed. 1. Repeat the test using the **test ds1-loop UUCSS ds1/csu-loopback-tests** command. 2. If the BLB test continues to fail, then replace the UDS1-BD circuit pack. 3. Run this test again.

Continued on next page

Table 10-673. TEST #138 Loss of Signal Alarm Inquiry Test — *Continued*

Error Code	Test Result	Description/Recommendation
1311	FAIL	The Integrated CSU (I-CSU) Module Equipment Loopback (ELB) test (#1210) failed. This test is executed by the I-CSU during I-CSU power-up/reset (i.e., the UDS1 board is physically inserted and a CSU Module or a Sync Splitter is already installed) or when the CSU Module/Sync Splitter is plugged on to an already initialized DS1 board. The ELB test is also executed as part of the command **test ds1-loop UUCSS ds1/csu-loopback-tests** for the CSU Module and T1 Sync Splitter. 1. Execute the **test ds1-loop UUCSS ds1/csu-loopback-tests** command. 2. If the ELB test continues to fail, then either the UDS1 board, the CSU Module/T1 Sync Splitter, or the I/O cable between the backplane and the CSU module/T1 Sync Splitter (or any combination thereof) has failed. Attempt to isolate the problem to one of these areas. Begin by replacing the CSU Module/T1 Sync Splitter and running the **test ds1-loop UUCSS ds1/csu-loopback-tests** command again. 3. If the ELB test continues to fail, then replace the UDS1 board and run the **test ds1-loop UUCSS ds1/csu-loopback-tests** command again. 4. If the ELB test continues to fail, the problem could be in the I/O cable between the backplane and the CSU module/T1 Sync Splitter.
1312	FAIL	The Integrated CSU (I-CSU) Module Repeater Loopback (RLB) test (#1211) failed. This test is executed during I-CSU/Sync Splitter power-up/reset (i.e., the UDS1 board is physically inserted and the CSU Module or the Sync Splitter is already installed) or when the CSU Module/Sync Splitter is plugged on to an already initialized DS1 board. The RLB test is also executed as part of the command ***test ds1-loop UUCSS ds1/csu-loopback-tests*** for the CSU Module/T1 Sync Splitter. 1. Execute the ***test ds1-loop UUCSS ds1/csu-loopback-tests*** command. 2. If the RLB test continues to fail, then replace the CSU Module/T1 Sync Splitter. 3. Run this test again.

Continued on next page

Table 10-673. TEST #138 Loss of Signal Alarm Inquiry Test — *Continued*

Error Code	Test Result	Description/Recommendation
1313	FAIL	The UDS1 circuit pack could not deactivate a CPE Loopback Jack loopback. 1. Execute the ***test ds1-loop UUCSS end-loopback/span-test*** command. 2. If the attempt to deactivate the CPE Loopback Jack is not successful, check the cabling and investigate the problem at the CPE Loopback Jack. 3. Run the test again.
1314	FAIL	The UDS1 circuit pack could not deactivate a far-end CSU loopback. 1. Execute the ***test ds1-loop UUCSS end-loopback/span-test*** command.
1320	FAIL	A CSU Module/Sync Splitter hardware failure, or an ICSU/Sync Splitter serial interface audit failure was detected by the UDS1 circuit pack. 1. Replace the CSU module/Sync Splitter, and then run the test again. 2. If the test continues to fail with this error code, replace the UDS1-BD circuit pack and run the test again. 3. If the test continues to fail with this error code, then the problem could be in the I/O cable between the backplane and the CSU module/Sync Splitter.
1321	FAIL	DTE LOS (loss of signal) was detected between the UDS1 board and the CSU Module or the Sync Splitter. Either the UDS1 board, the CSU Module/Sync Splitter, or the I/O cable between the backplane and the CSU module/Sync Splitter (or any combination thereof) has failed. Attempt to isolate the problem to one of these areas. 1. Replace the CSU Module/Sync Splitter and run the test again. 2. If the test continues to fail with this error code, then replace the UDS1-BD board and run the test again. 3. If the test continues to fail with this error code, the problem could be in the I/O cable between the backplane and the CSU module/Sync Splitter.

Continued on next page

Table 10-673. TEST #138 Loss of Signal Alarm Inquiry Test — *Continued*

Error Code	Test Result	Description/Recommendation
1322	FAIL	No 5 volts power detected from the UDS1 circuit pack to the CSU Module or the Sync Splitter. Problem is probably due to an open fuse on the DS1 board or a faulty ICSU/Sync Splitter. **NOTE:** Do not immediately swap DS1 boards as this may blow the fuse on the new board. 1. If the test continues to fail with this error code, then replace the CSU Module/Sync Splitter and run the test again. 2. Remove the UDS1 from the system and reinsert. 3. Run the test again once the board has finished its reset. 4. If the test continues to fail with this error code, then replace the UDS1-BD board and run the test again. 5. If the test continues to fail with this error code, the problem could be in the I/O cable between the backplane and the CSU module/Sync Splitter.
1323	FAIL	A service-affecting CSU Module/Sync Splitter audit failure was detected by the UDS1 circuit pack. All administered ports on the UDS1 circuit pack are affected and maintenance software will place the ports into the out-of-service state. 1. Replace the CSU Module or the Sync Splitter.
1324	FAIL	A non-service-affecting CSU Module/Sync Splitter audit failure was detected by the UDS1 circuit pack. No ports should be affected. No immediate action is required. These errors indicate that the CSU Module/Sync Splitter hardware may have a problem, and that it should be replaced when practical to avoid further deterioration.
1400	FAIL	Echo Canceller Function failed, this could be a hardware problem on the TN464GP/TN2464BP: 1. Issue the **busyout board** command. 2. Issue the **test board long** command. 3. Issue the **release board** command. 4. If Test 1420 still fails, replace the TN464GP/TN2464BP.

Continued on next page

Table 10-673. TEST #138 Loss of Signal Alarm Inquiry Test — *Continued*

Error Code	Test Result	Description/Recommendation
1401	FAIL	Echo Canceller Function failed, this could be a hardware problem on the TN464GP/TN2464BP: 1. Issue the **busyout board** command. 2. Issue the **reset board** command. 3. Issue the **test board long** command. 4. Issue the **release busy board** command. 5. If the test still fails replace the TN464GP/TN2464BP.
	PASS	DS1 signal is present and the physical link is healthy. In addition, no Integrated CSU/Sync Splitter errors or echo cancellation errors are detected.
0	NO BOARD	The test could not relate the internal ID to the port (no board). This could be due to incorrect translations, no board is inserted, an incorrect board is inserted, or an insane board is inserted. 1. Ensure that the board translations are correct. Execute the **add ds1 UUCSS** command to administer the UDS1 interface if it is not already administered. 2. If the board was already administered correctly, check the error log to determine whether the board is hyperactive. If this is the case, the board is shut down. Reseating the board will re-initialize the board. 3. If the board was found to be correctly inserted in step 1, then issue the **busyout board** command. 4. Issue the **reset board** command. 5. Issue the **release busy board** command. 6. Issue the **test board long** command. This should re-establish the linkage between the internal ID and the port.

Blue Alarm Inquiry Test (#139)

The Blue Alarm is a signal sent by the remote DS1 endpoint when it is out-of-service. The Blue Alarm Inquiry Test checks the blue alarm status of the remote DS1 endpoint.

When the UDS1 Interface circuit pack detects a Blue Alarm signal from the remote DS1 endpoint, the circuit pack transmits a Yellow alarm to the remote DS1 endpoint and sends a BLUE ALARM message to the maintenance software. When the Blue alarm is confirmed, the maintenance software places all trunks or ports of the UDS1 Interface circuit pack into the out-of-service state. The inquiry test runs every 10 minutes until the Blue alarm is cleared.

The UDS1 Interface circuit pack takes one second to recognize and report a Blue alarm and 16 seconds to recognize and report the resolution of a Blue alarm. When the Blue alarm is cleared, the UDS1 Interface circuit pack stops transmitting the Yellow alarm and places the trunks or ports back into the service state before the Blue alarm occurs.

Line Loopback Alarm

The Line Loopback (LLB) is used by the remote DS1 endpoint to put the ICSU or DS1 board into a loopback mode. When the ICSU or DS1 board is in the LLB mode, the arriving bit pattern is regenerated and sent back. The Line Loopback (LLB) Alarm activates when the in-band activate LLB bit pattern arrives continuously for 5 seconds on the DS1 line. The LLB deactivates when the in-band deactivate LLB bit pattern arrives continuously for 5 seconds on the DS1 line.

Since LLB is a maintenance condition rendering all DS0 channels unavailable for signaling or bearer traffic, maintenance software treats this the same as a Blue Alarm.

Payload Loopback Alarm

The Payload Loopback (PLB) is used by the remote DS1 endpoint to put the switch DS1 into a loopback mode. The PLB Alarm activates when a network protocol activate bit pattern arrives over the 4Kbps ESF data link on the DS1 line. The PLB deactivates when a network protocol deactivate bit pattern arrives over the 4Kbps ESF data link on the DS1 line.

Since PLB is a maintenance condition rendering all DS0 channels unavailable for signaling or bearer traffic, maintenance software treats this the same as a Blue Alarm

Table 10-674. TEST #139 Blue Alarm Inquiry Test

Error Code	Test Result	Description/Recommendation
	ABORT	Internal system error 1. Retry the command at 1-minute intervals for a maximum of 5 times.
2000	ABORT	Response to the test was not received within the allowable time period. This may be due to hyperactivity. Error Type 1538 in the error log indicates hyperactivity. The hyperactive circuit pack is out of service and one or more of the following symptoms may be exhibited. 1. The UDS1-BD tests (such as Test #138 and Test #139) are aborting with error code 2000. 2. The tests run on the ports of this circuit pack are returning a no board result. 3. A **busyout** or a **release** has no affect on the test results. 4. A **list config** shows that the circuit pack and the ports are properly installed. When hyperactivity occurs, the circuit pack is isolated from the system, and all of the trunks for this circuit pack are placed into the out of service state. The system will try to restore the circuit pack within 15 minutes. When no faults are detected for 15 minutes, the UDS1 interface circuit pack is restored to normal operation. All of the trunks for the UDS1 interface circuit pack are then returned to the in service state. Hyperactivity is often caused by the associated facility. In such a case, faults (such as slips, misframes, or blue alarms) would be entered in the error log. In addition, many hardware errors would be logged against the associated trunk circuits. If the facility is OK and the error occurs again after 15 minutes, replace the circuit pack.
2100	ABORT	Could not allocate the necessary system resources to run this test. 1. Retry the command at 1-minute intervals for a maximum of 5 times.

Continued on next page

Table 10-674. TEST #139 Blue Alarm Inquiry Test — *Continued*

Error Code	Test Result	Description/Recommendation
	FAIL	The remote DS1 endpoint is out-of-service.
1 1794	FAIL	The UDS1 Interface circuit pack detects a Line Loopback Alarm (LLB). If the UDS1 interface circuit pack connects to a T1 facility, call the vendor of the T1 carrier to diagnose the remote DS1 endpoint. If the UDS1 interface circuit pack connects directly to a switch, call the system technician of the remote switch to diagnose the DS1 endpoint. If the UDS1 interface circuit pack connects directly to a line-side terminating device (for example, a PRI terminal adapter), call the vendor of the terminating device to diagnose the equipment.
1795	FAIL	The UDS1 Interface circuit pack detects a Payload Loopback Alarm (PLB). If the UDS1 Interface circuit pack connects to a leased T1 facility, call the vendor of the T1 carrier to diagnose the remote DS1 endpoint. If the UDS1 Interface circuit pack connects directly to another DS1 board, call the system technician of the remote switch to diagnose the DS1 endpoint. If the UDS1 Interface circuit pack connects directly to a line-side terminating device such as a PRI terminal adapter contact the vendor of the terminating device to diagnose the equipment.

Continued on next page

Table 10-674. TEST #139 Blue Alarm Inquiry Test — *Continued*

Error Code	Test Result	Description/Recommendation
	PASS	Remote DS1 endpoint is in-service. Neither a Blue alarm nor a Line Loopback alarm nor a Payload Loopback Alarm is detected by the UDS1 Interface circuit pack.
0	NO BOARD	The test could not relate the internal ID to the port (no board). This could be due to incorrect translations, no board is inserted, an incorrect board is inserted, or an insane board is inserted. 1. Ensure that the board translations are correct. Execute the **add ds1 UUCSS** command to administer the UDS1 interface if it is not already administered. 2. If the board was already administered correctly, check the error log to determine whether the board is hyperactive. If this is the case, the board is shut down. Reseating the board will re-initialize the board. 3. If the board was found to be correctly inserted in step 1, then issue the **busyout board** command. 4. Issue the **reset board** command. 5. Issue the **release busy board** command. 6. Issue the **test board long** command. This should re-establish the linkage between the internal ID and the port.

Red Alarm Inquiry Test (#140)

A UDS1 Interface circuit pack raises a Red alarm when the framing pattern of the incoming DS1 bit stream has been lost. The Red Alarm Inquiry Test checks the framing status of a UDS1 Interface circuit pack. A UDS1 Interface circuit pack takes 3 seconds to recognize and report a Red alarm and 10 seconds to recognize and report the resolution of a Red alarm.

When the UDS1 Interface circuit pack detects a Red alarm, the circuit pack transmits a Yellow alarm to the remote DS1 endpoint and sends a RED ALARM message to the maintenance software. After the Red alarm is confirmed, the maintenance software places all trunks or ports of the circuit pack into the out-of-service state. The inquiry test runs every 10 minutes until the Red alarm is cleared.

When the Red alarm is cleared, the UDS1 Interface circuit pack stops transmitting the Yellow alarm to the remote DS1 endpoint. The maintenance software restores all trunks or ports of the UDS1 Interface circuit pack to the service state before the Red alarm occurs.

Loss of Multiframe Alarm

If the UDS1 Interface circuit pack is administered using DMI-BOS signaling, the UDS1 Interface circuit pack raises a Loss of Multiframe Alarm (LMA) when it cannot interpret the incoming signaling bits to synchronize to the multiframe pattern received in the 24th channel. Once the UDS1 Interface circuit pack detects an LMA, the circuit pack transmits a Remote Multiframe Alarm (RMA) to the remote DS1 endpoint. Maintenance software handles both Red alarm and LMA alarm(s) using the same mechanism.

Table 10-675. TEST #140 Red Alarm Inquiry Test

Error Code	Test Result	Description/Recommendation
	ABORT	Internal system error 1. Retry the command at 1-minute intervals a maximum of 5 times.
2000	ABORT	Response to the test was not received within the allowable time period. This may be due to hyperactivity. Error Type 1538 in the error log indicates hyperactivity. The hyperactive circuit pack is out of service and one or more of the following symptoms may be exhibited. 1. The UDS1-BD tests (such as Test #138 and Test #139) are aborting with error code 2000. 2. The tests run on the ports of this circuit pack are returning a no board result. 3. A **busyout** or a **release** has no affect on the test results. 4. A **list config** command shows that the circuit pack and the ports are properly installed. **NOTE:** When hyperactivity occurs, the circuit pack is isolated from the system, and all of the trunks for this circuit pack are placed into the out of service state. The system will try to restore the circuit pack within 15 minutes. When no faults are detected for 15 minutes, the UDS1 interface circuit pack is restored to normal operation. All of the trunks for the UDS1 interface circuit pack are then returned to the in service state. Hyperactivity is often caused by the associated facility. In such a case, faults (such as slips, misframes, or blue alarms) would be entered in the error log. In addition, many hardware errors would be logged against the associated trunk circuits. If the facility is OK and the error occurs again after 15 minutes, replace the circuit pack.

Continued on next page

Table 10-675. TEST #140 Red Alarm Inquiry Test — *Continued*

Error Code	Test Result	Description/Recommendation
	FAIL	The UDS1 interface circuit pack detected a red alarm. An out of frame condition occurred on the UDS1 interface circuit pack. The UDS1 interface circuit pack will transmit a yellow alarm to the remote UDS1 endpoint until the red alarm is retired. If the UDS1 connects to a T1 network facility or to another switch, do the following. 1. Verify that both endpoints of the DS1 link are administered using the same signaling mode, framing mode, and line coding. 2. Contact T1 Network Service or a technician at the far-end switch to diagnose the remote DS1 endpoint. 3. Check the physical connectivity of the UDS1 packs and of the cable. 4. Replace the local UDS1 interface circuit pack, and repeat the test. If the UDS1 connects to a line-side terminating device (for example, a PRI terminal adapter), do the following. 1. Verify that the switch DS1 and the line-side terminating device are administered using the same signaling mode, framing mode, and line coding. 2. Investigate the maintenance status of the line-side terminating device. Refer to the 'Line-Side Terminating Device Operating Manual' for information. 3. Contact the vendor of the line-side terminating device to diagnose the equipment. 4. Check the physical connection of the UDS1 interface circuit pack to the terminating device, and check the premise distribution system (or the intra-premise wiring) for physical connection failures. 5. Replace the local UDS1 interface circuit pack and repeat the test.

Continued on next page

Table 10-675. TEST #140 Red Alarm Inquiry Test — *Continued*

Error Code	Test Result	Description/Recommendation
1	FAIL	The test failed. The UDS1 interface circuit pack detected a loss of multiframe alarm (LMA). An out of frame condition occurred on the UDS1 interface circuit pack. The UDS1 interface circuit pack will transmit a remote multiframe alarm (RMA) to the remote UDS1 endpoint until the LMA is retired. If the UDS1 connects to a T1 network facility or to another switch, do the following: 1. Verify that both endpoints of the DS1 link are administered using the same signaling mode, framing mode, and line coding. 2. Contact T1 Network Service or a technician at the far-end switch to diagnose the remote DS1 endpoint. 3. Check the physical connectivity of the UDS1 packs and of the cable. 4. Replace the local UDS1 interface circuit pack, and repeat the test. If the UDS1 connects to a line-side terminating device (for example, a PRI terminal adapter), do the following. 1. Verify that the switch DS1 and the line-side terminating device are administered using the same signaling mode, framing mode, and line coding. 2. Investigate the maintenance status of the line-side terminating device. Refer to the 'Line-Side Terminating Device Operating Manual' for information. 3. Contact the vendor of the line-side terminating device to diagnose the equipment. 4. Check the physical connection of the UDS1 interface circuit pack to the terminating device, and check the premise distribution system (or the intra-premise wiring) for physical connection failures. 5. Replace the local UDS1 interface circuit pack and repeat the test.

Continued on next page

Table 10-675. TEST #140 Red Alarm Inquiry Test — *Continued*

Error Code	Test Result	Description/Recommendation
	PASS	No Red alarm is detected on the UDS1 Interface circuit pack.
0	NO BOARD	The test could not relate the internal ID to the port (no board). This could be due to incorrect translations, no board is inserted, an incorrect board is inserted, or an insane board is inserted. 1. Ensure that the board translations are correct. Execute the **add ds1 UUCSS** command to administer the UDS1 interface if it is not already administered. 2. If the board was already administered correctly, check the error log to determine whether the board is hyperactive. If this is the case, the board is shut down. Reseating the board will re-initialize the board. 3. If the board was found to be correctly inserted in step 1, then issue the **busyout board** command. 4. Issue the **reset board** command. 5. Issue the **release busy board** command. 6. Issue the **test board long** command. This should re-establish the linkage between the internal ID and the port.

Yellow Alarm Inquiry Test (#141)

Receiving a Yellow alarm from a remote DS1 endpoint indicates that the remote DS1 endpoint has an out-of-frame condition. The Yellow Alarm Inquiry Test is used to determine whether the remote DS1 endpoint is transmitting a Yellow alarm. The UDS1 Interface circuit pack takes 500 msec to recognize and report a Yellow alarm and 500 msec to recognize and report that a Yellow alarm condition is cleared.

When the UDS1 Interface circuit pack detects a Yellow alarm from the remote DS1 endpoint, it sends a YELLOW-ALARM uplink message to the maintenance software. After the maintenance software receives the YELLOW-ALARM message, the Yellow Alarm Inquiry Test is run to confirm the Yellow alarm. Once the Yellow alarm is confirmed, the maintenance software places all trunks or ports on the circuit pack into the out-of-service state. The Inquiry Test runs every 10 minutes until the Yellow alarm is cleared.

When the Yellow alarm is cleared, the maintenance software restores all trunks or ports on the UDS1 Interface circuit pack back to their previous service state before the Yellow alarm was raised.

This Yellow alarm corresponds to the yellow F2 state documented in CCITT Recommendation I.431.

Remote Multiframe Alarm

Remote Multiframe Alarm (RMA) indicates that the remote DS1 endpoint is in a Loss of Multiframe Alarm condition while the UDS1 Interface circuit pack is administered using the DMI-BOS common channel signaling. The RMA is handled as a Yellow alarm.

Yellow F5 Fault Alarm

For 32-channel E1 operation with CRC4 on, the F5 fault state is defined as a fault in the user-network interface, specifically in the direction from the user (PBX) to the network. Refer to CCITT recommendation I.431.

Table 10-676. TEST #141 Yellow Alarm Inquiry Test

Error Code	Test Result	Description/Recommendation
	ABORT	Internal system error 1. Retry the command at 1-minute intervals a maximum of 5 times.
2000	ABORT	Response to the test was not received within the allowable time period. This may be due to hyperactivity. Error Type 1538 in the error log indicates hyperactivity. The hyperactive circuit pack is out of service and one or more of the following symptoms may be exhibited. 1. The UDS1-BD tests (such as Test #138 and Test #139) are aborting with error code 2000. 2. The tests run on the ports of this circuit pack are returning a no board result. 3. A **busyout** or a **release** has no affect on the test results. 4. A **list config** command shows that the circuit pack and the ports are properly installed. **NOTE:** When hyperactivity occurs, the circuit pack is isolated from the system, and all of the trunks for this circuit pack are placed into the out of service state. The system will try to restore the circuit pack within 15 minutes. When no faults are detected for 15 minutes, the UDS1 interface circuit pack is restored to normal operation. All of the trunks for the UDS1 interface circuit pack are then returned to the in service state. Hyperactivity is often caused by the associated facility. In such a case, faults (such as slips, misframes, or blue alarms) would be entered in the error log. In addition, many hardware errors would be logged against the associated trunk circuits. If the facility is OK and the error occurs again after 15 minutes, replace the circuit pack.

Continued on next page

Table 10-676. TEST #141 Yellow Alarm Inquiry Test — *Continued*

Error Code	Test Result	Description/Recommendation
	FAIL	The UDS1 interface circuit pack detected a yellow alarm sent by the remote DS1 endpoint. An out of frame condition occurred at the DS1 endpoint. If the UDS1 connects to a T1 network facility or to another switch, do the following: 1. Verify that both endpoints of the DS1 link are administered using the same signaling mode, framing mode, and line coding. 2. Contact T1 Network Service or a technician at the far-end switch to diagnose the remote DS1 endpoint. 3. Check the physical connectivity of the UDS1 packs and of the cable. 4. Replace the local UDS1 interface circuit pack, and repeat the test. If the UDS1 connects to a line-side terminating device (for example, a PRI terminal adapter), do the following: 1. Verify that the switch DS1 and the line-side terminating device are administered using the same signaling mode, framing mode, and line coding. 2. Investigate the maintenance status of the line-side terminating device. Refer to the 'Line-Side Terminating Device Operating Manual' for information. 3. Contact the vendor of the line-side terminating device to diagnose the equipment. 4. Check the physical connection of the UDS1 interface circuit pack to the terminating device, and check the premise distribution system (or the intra-premise wiring) for physical connection failures. 5. Replace the local UDS1 interface circuit pack and repeat the test.

Continued on next page

Table 10-676. TEST #141 Yellow Alarm Inquiry Test — *Continued*

Error Code	Test Result	Description/Recommendation
1	FAIL	The UDS1 interface circuit pack detected a remote multiframe alarm (RMA) sent by the remote DS1 endpoint. An out of frame condition occurred at the DS1 endpoint. If the UDS1 connects to a T1 network facility or to another switch, do the following: 1. Verify that both endpoints of the DS1 link are administered using the same signaling mode, framing mode, and line coding. 2. Contact T1 Network Service or a technician at the far-end switch to diagnose the remote DS1 endpoint. 3. Check the physical connectivity of the UDS1 packs and of the cable. 4. Replace the local UDS1 interface circuit pack, and repeat the test. If the UDS1 connects to a line-side terminating device (for example, a PRI terminal adapter), do the following: 1. Verify that the switch DS1 and the line-side terminating device are administered using the same signaling mode, framing mode, and line coding. 2. Investigate the maintenance status of the line-side terminating device. Refer to the 'Line-Side Terminating Device Operating Manual' for information. 3. Contact the vendor of the line-side terminating device to diagnose the equipment. 4. Check the physical connection of the UDS1 interface circuit pack to the terminating device, and check the premise distribution system (or the intra-premise wiring) for physical connection failures. 5. Replace the local UDS1 interface circuit pack and repeat the test.

Continued on next page

Table 10-676. TEST #141 Yellow Alarm Inquiry Test — *Continued*

Error Code	Test Result	Description/Recommendation
2	FAIL	The UDS1 interface circuit pack is reporting a Yellow F5 fault alarm. There is a fault in the User-Network interface from the user (PBX) to the network. An out-of-frame condition occurs on the remote DS1 endpoint. If the UDS1 connects to a T1 network facility: 1. Verify that both endpoints of the DS1 link are administered using the same signaling mode, framing mode, and line coding. 2. Contact T1 Network Service to diagnose the remote DS1 endpoint. 3. Check the physical connectivity of the DS1 Interface circuit packs and cable. 4. Replace the local UDS1 Interface circuit pack and repeat the test. If the UDS1 connects to a line-side terminating device such as a PRI terminal adapter: 1. Verify that the switch DS1 and the line-side terminating device are administered using the same signaling mode, framing mode, and line coding. 2. Investigate the maintenance status of the line-side terminating device. Refer to the 'Line-Side Terminating Device Operating Manual' for information. 3. Contact the vendor of the line-side terminating device to diagnose the equipment. 4. Check the physical connection of the UDS1 Interface circuit pack to the terminating device. Check premise distribution system (or intra-premise wiring) for physical connection failures. 5. Replace the local UDS1 Interface circuit pack and repeat the test.

Continued on next page

Table 10-676. TEST #141 Yellow Alarm Inquiry Test — *Continued*

Error Code	Test Result	Description/Recommendation
	PASS	Neither a Yellow alarm nor a Remote Multiframe Alarm nor a F5 state alarm is being received from the remote DS1 endpoint.
0	NO BOARD	The test could not relate the internal ID to the port (no board). This could be due to incorrect translations, no board is inserted, an incorrect board is inserted, or an insane board is inserted. 1. Ensure that the board translations are correct. Execute **add ds1 UUCSS** to administer the UDS1 interface if it is not already administered. 2. If the board was already administered correctly, check the error log to determine whether the board is hyperactive. If this is the case, the board is shut down. Reseating the board will re-initialize the board. 3. If the board was found to be correctly inserted in step 1, then issue the **busyout board** command. 4. Issue the **reset board** command. 5. Issue the **release busy board** command. 6. Issue the **test board long** command. This should re-establish the linkage between the internal ID and the port.

Major Alarm Inquiry Test (#142)

The Major alarm raised by a UDS1 Interface circuit pack indicates that the average bit error rate on the DS1 facility is greater than 1/1000. The Major Alarm Inquiry Test is used to determine that the received DS1 bit error rate is greater than 1/1000. The UDS1 Interface circuit pack takes 10 seconds to recognize and report a Major alarm and 10 seconds to recognize and report that a Major alarm condition is cleared.

When the UDS1 Interface circuit pack detects a Major alarm, it sends a MAJOR-ALARM message to the maintenance software. (32-channel interfaces send a YELLOW alarm to the far end). After the maintenance software receives a MAJOR-ALARM message, the Major Alarm Inquiry Test is initiated to confirm the Major alarm on the UDS1 Interface circuit pack. The Inquiry Test runs every 10 minutes until the Major alarm is cleared. The maintenance software places all trunks or ports on the circuit pack in the out-of-service state if the Major alarm persists for more than 20 minutes.

When the Major alarm is cleared, the maintenance software restores all trunks or ports on the circuit pack to their previous service state before a Major alarm occurs.

Table 10-677. TEST #142 Major Alarm Inquiry Test

Error Code	Test Result	Description/Recommendation
	ABORT	Internal system error 1. Retry the command at 1-minute intervals a maximum of 5 times.
2000	ABORT	Response to the test was not received within the allowable time period. This may be due to hyperactivity. Error Type 1538 in the error log indicates hyperactivity. The hyperactive circuit pack is out of service and one or more of the following symptoms may be exhibited. 1. The UDS1-BD tests (such as Test #138 and Test #139) are aborting with error code 2000. 2. The tests run on the ports of this circuit pack are returning a no board result. 3. A **busyout** or a **release** has no affect on the test results. 4. A **list config** command shows that the circuit pack and the ports are properly installed. **NOTE:** When hyperactivity occurs, the circuit pack is isolated from the system, and all of the trunks for this circuit pack are placed into the out of service state. The system will try to restore the circuit pack within 15 minutes. When no faults are detected for 15 minutes, the UDS1 interface circuit pack is restored to normal operation. All of the trunks for the UDS1 interface circuit pack are then returned to the in service state. Hyperactivity is often caused by the associated facility. In such a case, faults (such as slips, misframes, or blue alarms) would be entered in the error log. In addition, many hardware errors would be logged against the associated trunk circuits. If the facility is OK and the error occurs again after 15 minutes, replace the circuit pack.
2100	ABORT	Could not allocate the necessary system resources to run this test. 1. Retry the command at 1-minute intervals for a maximum of 5 times.

Continued on next page

Table 10-677. TEST #142 Major Alarm Inquiry Test — *Continued*

Error Code	Test Result	Description/Recommendation
	FAIL	If the UDS1 connects to a T1 network facility or to another switch, do the following: 1. The performance of the DS1 link between the UDS1 interface circuit pack and the remote DS1 endpoint is very poor. Enter the **list measurement ds1-log UUCSS** command to read the error seconds measurement. 2. Verify that both endpoints of the DS1 link are administered using the same signaling mode, framing mode, and line coding. 3. Contact T1 Network Service or the technician at the remote switch to diagnose the equipment. 4. Check the physical connectivity of the UDS1 interface circuit packs and the cable. 5. Replace the local UDS1 interface circuit pack, and repeat the test.
	FAIL *(cont'd.)*	If the UDS1 connects to a line-side terminating device (for example, a PRI terminal adapter), do the following: 1. The performance of the DS1 link between the UDS1 interface circuit pack and the line-side terminating device is very poor. Enter the **list measurement ds1-log UUCSS** command to read the error seconds measurement. 2. Verify that the switch DS1 and the line-side terminating device are administered using the same signaling mode, framing mode, and line coding. 3. Investigate the maintenance status of the line-side terminating device. Refer to the 'Line-Side Terminating Device Operating Manual' for information. 4. Contact the vendor of the line-side terminating device to diagnose the equipment. 5. Check the physical connection of the UDS1 interface circuit pack to the terminating device, and check the premise distribution system (or the intra-premise wiring) for physical connection failures. 6. Replace the local UDS1 interface circuit pack and repeat the test.

Continued on next page

Table 10-677. TEST #142 Major Alarm Inquiry Test — *Continued*

Error Code	Test Result	Description/Recommendation
	PASS	No Major alarm is detected in the UDS1 Interface circuit pack.
0	NO BOARD	The test could not relate the internal ID to the port (no board). This could be due to incorrect translations, no board is inserted, an incorrect board is inserted, or an insane board is inserted. 1. Ensure that the board translations are correct. Execute the **add ds1 UUCSS** command to administer the UDS1 interface if it is not already administered. 2. If the board was already administered correctly, check the error log to determine whether the board is hyperactive. If this is the case, the board is shut down. Reseating the board will re-initialize the board. 3. If the board was found to be correctly inserted in step 1, then issue the **busyout board** command. 4. Issue the **reset board** command. 5. Issue the **release busy board** command. 6. Issue the **test board long** command. This should re-establish the linkage between the internal ID and the port.

Minor Alarm Inquiry Test (#143)

The Minor alarm raised by a UDS1 Interface circuit pack indicates that the average bit error rate on the DS1 facility is greater than 1/1,000,000, but less than 1/1000. The Minor Alarm Inquiry Test is used to determine that the received DS1 bit error rate is greater than 1/1,000,000 and less than 1/1000. When D4 framing mode is selected, the UDS1 Interface circuit pack takes 41-minutes to recognize and report a Minor alarm and 41-minutes to recognize and report that a Minor alarm condition has cleared. If ESF framing mode is selected, the UDS1 Interface circuit pack takes 10 minutes to recognize and report a Minor alarm and 10 minutes to recognize and report that a Minor alarm condition has cleared.

When the UDS1 Interface circuit pack detects a Minor alarm condition, it sends a MINOR-ALARM message to the maintenance software. After the maintenance software receives a MINOR-ALARM message, the Minor Alarm Inquiry Test is initiated to confirm the Minor alarm. All trunks or ports on the circuit pack are kept in the in-service state after the Minor alarm is confirmed. The Minor Alarm Inquiry Test runs every 10 minutes until the Minor alarm is cleared.

Table 10-678. TEST #143 Minor Alarm Inquiry Test

Error Code	Test Result	Description/Recommendation
	ABORT	Internal system error 1. Retry the command at 1-minute intervals a maximum of 5 times.
2000	ABORT	Response to the test was not received within the allowable time period. This may be due to hyperactivity. Error Type 1538 in the error log indicates hyperactivity. The hyperactive circuit pack is out of service and one or more of the following symptoms may be exhibited. 1. The UDS1-BD tests (such as Test #138 and Test #139) are aborting with error code 2000. 2. The tests run on the ports of this circuit pack are returning a no board result. 3. A **busyout** or a **release** has no affect on the test results. 4. A **list config** command shows that the circuit pack and the ports are properly installed. **NOTE:** When hyperactivity occurs, the circuit pack is isolated from the system, and all of the trunks for this circuit pack are placed into the out of service state. The system will try to restore the circuit pack within 15 minutes. When no faults are detected for 15 minutes, the UDS1 interface circuit pack is restored to normal operation. All of the trunks for the UDS1 interface circuit pack are then returned to the in service state. Hyperactivity is often caused by the associated facility. In such a case, faults (such as slips, misframes, or blue alarms) would be entered in the error log. In addition, many hardware errors would be logged against the associated trunk circuits. If the facility is OK and the error occurs again after 15 minutes, replace the circuit pack.
2100	ABORT	Could not allocate the necessary system resources to run this test. 1. Retry the command at 1-minute intervals for a maximum of 5 times.

Continued on next page

Table 10-678. TEST #143 Minor Alarm Inquiry Test — *Continued*

Error Code	Test Result	Description/Recommendation
	FAIL	Minor alarms are often accompanied by slip and misframe alarms against the board. Trunk alarms and hardware error logs may occur on the associated trunks. If the UDS1 connects to a T1 network facility or to another switch, do the following: 1. The performance of the DS1 link between the UDS1 interface circuit pack and the remote DS1 endpoint is poor. Enter the **list measurement ds1-log UUCSS** command to read the error seconds measurement. 2. Verify that both endpoints of the DS1 link are administered using the same signaling mode, framing mode, and line coding. 3. Contact T1 Network Service or the technician at the remote switch to diagnose the equipment. 4. Check the physical connectivity of the UDS1 interface circuit packs and the cable. 5. Replace the local UDS1 interface circuit pack, and repeat the test.
	FAIL *(cont'd.)*	If the UDS1 connects to a line-side terminating device (for example, a PRI terminal adapter), do the following: 1. The performance of the DS1 link between the UDS1 interface circuit pack and the line-side terminating device is very poor. Enter the **list measurement ds1-log UUCSS** command to read the error seconds measurement. 2. Verify that the switch DS1 and the line-side terminating device are administered using the same signaling mode, framing mode, and line coding. 3. Investigate the maintenance status of the line-side terminating device. Obtain the error seconds measurement on the terminating device (if possible). Refer to the 'Line-Side Terminating Device Operating Manual' for information. 4. Contact the vendor of the line-side terminating device to diagnose the equipment. 5. Check the physical connection of the UDS1 interface circuit pack to the terminating device, and check the premise distribution system (or the intra-premise wiring) for physical connection failures. 6. Replace the local UDS1 interface circuit pack and repeat the test.

Continued on next page

Table 10-678. TEST #143 Minor Alarm Inquiry Test — *Continued*

Error Code	Test Result	Description/Recommendation
	PASS	No Minor alarm is detected in the UDS1 Interface circuit pack.
0	NO BOARD	The test could not relate the internal ID to the port (no board). This could be due to incorrect translations, no board is inserted, an incorrect board is inserted, or an insane board is inserted. 1. Ensure that the board translations are correct. Execute the **add ds1 UUCSS** command to administer the UDS1 interface if it is not already administered. 2. If the board was already administered correctly, check the error log to determine whether the board is hyperactive. If this is the case, the board is shut down. Reseating the board will re-initialize the board. 3. If the board was found to be correctly inserted in step 1, then issue the **busyout board** command. 4. Issue the **reset board** command. 5. Issue the **release busy board** command. 6. Issue the **test board long** command. This should re-establish the linkage between the internal ID and the port.

Slip Alarm Inquiry Test (#144)

Slips occur when transmitter and receiver are not running at precisely the same clock rate. The UDS1 Interface circuit pack can detect both positive and negative slips on the DS1 facility. The Slip Alarm Inquiry Test is used to acquire the total number of slips that have occurred on a DS1 link.

When the UDS1 Interface circuit pack detects a slip condition, the circuit pack increments the on-board slip counter by one. A SLIP-COUNT message is spontaneously sent to the system software after the counter reaches a threshold (for example, 88). When the maintenance software receives the SLIP-COUNT message, the Slip Alarm Inquiry Test is initiated to query the slip counters on a UDS1 Interface circuit pack and total the slip counts in the maintenance software.

If the count of slips is over the threshold, a Minor alarm is raised against the UDS1 Interface circuit pack. All trunks or ports of the UDS1 Interface circuit pack remain in the in-service state. If the UDS1 Interface circuit pack is used to supply the system synchronization source, the MINOR alarm will initiate a synchronization source switch. See “TDM-BUS” and ‘‘SYNC (Synchronization)’’ for details.

Table 10-679. TEST #144 Slip Alarm Inquiry Test

Error Code	Test Result	Description/Recommendation
	ABORT	Internal system error 1. Retry the command at 1-minute intervals a maximum of 5 times.
2000	ABORT	Response to the test was not received within the allowable time period. This may be due to hyperactivity. Error Type 1538 in the error log indicates hyperactivity. The hyperactive circuit pack is out of service and one or more of the following symptoms may be exhibited. 1. The UDS1-BD tests (such as Test #138 and Test #139) are aborting with error code 2000. 2. The tests run on the ports of this circuit pack are returning a no board result. 3. A **busyout** or a **release** has no affect on the test results. 4. A **list config** command shows that the circuit pack and the ports are properly installed. **NOTE:** When hyperactivity occurs, the circuit pack is isolated from the system, and all of the trunks for this circuit pack are placed into the out of service state. The system will try to restore the circuit pack within 15 minutes. When no faults are detected for 15 minutes, the UDS1 interface circuit pack is restored to normal operation. All of the trunks for the UDS1 interface circuit pack are then returned to the in service state. Hyperactivity is often caused by the associated facility. In such a case, faults (such as slips, misframes, or blue alarms) would be entered in the error log. In addition, many hardware errors would be logged against the associated trunk circuits. If the facility is OK and the error occurs again after 15 minutes, replace the circuit pack.
2100	ABORT	Could not allocate the necessary system resources to run this test. 1. Retry the command at 1-minute intervals for a maximum of 5 times.

Continued on next page

Table 10-679. TEST #144 Slip Alarm Inquiry Test — *Continued*

Error Code	Test Result	Description/Recommendation
1 to 88	FAIL	The test failed because the UDS1 interface circuit pack and the remote DS1 endpoint are not synchronized to the same clock rate. The UDS1 interface circuit pack detected a slip alarm. The error code equals the number of slips detected by the UDS1 interface circuit pack since the last slip alarm inquiry test. If the UDS1 connects to a T1 network facility or to another switch, do the following: 1. Retry the command at 1-minute intervals for a maximum of 5 times. 2. If the DS1 interface circuit pack is a TN464C, enter the **list measurement ds1-log UUCSS** command to read the error seconds measurement. 3. Verify that both endpoints of the DS1 link are administered using the same signaling mode, framing mode, and line coding. 4. Check the active alarm and error logs for recent alarms and errors against the synchronization (SYNC). Follow the suggested repair procedure for these errors. 5. Contact T1 Network Service or the technician at the remote switch to diagnose the remote DS1 endpoint. 6. Check the physical connectivity of the UDS1 interface circuit packs and the cable. 7. Replace the local UDS1 interface circuit pack, and repeat the test.

Continued on next page

Table 10-679. TEST #144 Slip Alarm Inquiry Test — *Continued*

Error Code	Test Result	Description/Recommendation
1 to 88 *(cont.)*	FAIL *(cont'd.)*	If the UDS1 connects to a line-side terminating device (for example, a PRI terminal adapter), do the following: 1. Retry the command at 1-minute intervals for a maximum of 5 times. 2. Enter the **list measurement ds1-log UUCSS** command to read the error seconds measurement. 3. Verify that the switch DS1 and the line-side terminating device are administered using the same signaling mode, framing mode, and line coding. 4. Investigate the maintenance status of the line-side terminating device. Refer to the 'Line-Side Terminating Device Operating Manual' for information. 5. Contact the vendor of the line-side terminating device to diagnose the equipment. 6. Check the physical connection of the UDS1 interface circuit pack to the terminating device, and check the premise distribution system (or the intra-premise wiring) for physical connection failures. 7) Replace the local UDS1 interface circuit pack and repeat the test.
	PASS	No Slip alarm is detected on the UDS1 Interface circuit pack.
0	NO BOARD	The test could not relate the internal ID to the port (no board). This could be due to incorrect translations, no board is inserted, an incorrect board is inserted, or an insane board is inserted. 1. Ensure that the board translations are correct. Execute the **add ds1 UUCSS** command to administer the UDS1 interface if it is not already administered. 2. If the board was already administered correctly, check the error log to determine whether the board is hyperactive. If this is the case, the board is shut down. Reseating the board will re-initialize the board. 3. If the board was found to be correctly inserted in step 1, then issue the **busyout board** command. 4. Issue the **reset board** command. 5. Issue the **release busy board** command. 6. Issue the **test board long** command. This should re-establish the linkage between the internal ID and the port.

Misframe Alarm Inquiry Test (#145)

Misframe Alarm indicates that framing bits observed on a UDS1 Interface circuit pack are in error. The Misframe Alarm Inquiry Test queries the total number of misframes that have occurred on a DS1 Interface circuit pack since the last inquiry.

When the DS1 Interface circuit pack detects a misframe error, it increments its misframe counter by one. If the counter reaches a specified threshold (i.e., 17), a MISFRAME-COUNT message is automatically sent to the switch maintenance software. After the maintenance software receives the MISFRAME-COUNT message, the Misframe Alarm Inquiry Test is initiated to collect the misframe counts from the UDS1 Interface circuit pack.

When the threshold of misframes is reached, if the UDS1 Interface circuit pack is supplying the system synchronization source, then a switching synchronization source message is sent to the TDM Bus Clock. See TDM-BUS (TDM Bus) Maintenance documentation for details. A Minor alarm against the UDS1 Interface circuit pack is raised, but all trunks or ports of the UDS1 Interface circuit pack remain in the in-service state.

Table 10-680. TEST #145 Misframe Alarm Inquiry Test

Error Code	Test Result	Description/Recommendation
	ABORT	Internal system error 1. Retry the command at 1-minute intervals a maximum of 5 times.
2000	ABORT	Response to the test was not received within the allowable time period. This may be due to hyperactivity. Error Type 1538 in the error log indicates hyperactivity. The hyperactive circuit pack is out of service and one or more of the following symptoms may be exhibited. 1. The UDS1-BD tests (such as Test #138 and Test #139) are aborting with error code 2000. 2. The tests run on the ports of this circuit pack are returning a no board result. 3. A **busyout** or a **release** has no affect on the test results. 4. A **list config** command shows that the circuit pack and the ports are properly installed. **NOTE:** When hyperactivity occurs, the circuit pack is isolated from the system, and all of the trunks for this circuit pack are placed into the out of service state. The system will try to restore the circuit pack within 15 minutes. When no faults are detected for 15 minutes, the UDS1 interface circuit pack is restored to normal operation. All of the trunks for the UDS1 interface circuit pack are then returned to the in service state. Hyperactivity is often caused by the associated facility. In such a case, faults (such as slips, misframes, or blue alarms) would be entered in the error log. In addition, many hardware errors would be logged against the associated trunk circuits. If the facility is OK and the error occurs again after 15 minutes, replace the circuit pack.
2100	ABORT	Could not allocate the necessary system resources to run this test. 1. Retry the command at 1-minute intervals for a maximum of 5 times.

Continued on next page

Table 10-680. TEST #145 Misframe Alarm Inquiry Test — *Continued*

Error Code	Test Result	Description/Recommendation
1 to 17	FAIL	The test failed because the UDS1 interface circuit pack detected errors in the received framing bits pattern. The error code equals the number of misframes detected by the UDS1 interface circuit pack since the last misframe alarm inquiry test. Major bit and minor bit error rate (error types 2561 and 2817) error logs often accompany misframe alarms. Clearing the cause of these error logs may clear the misframes which are occurring. If the UDS1 connects to a T1 network facility or to another switch, do the following: 1. Retry the command at 1-minute intervals for a maximum of 5 times. 2. If the DS1 interface circuit pack is a TN464C, enter the **list measurement ds1-log UUCSS** command to read the error seconds measurement. 3. Verify that both endpoints of the DS1 link are administered using the same signaling mode, framing mode, and line coding. 4. Check the active alarm and error logs for recent alarms and errors against the synchronization (SYNC). Follow the suggested repair procedure for these errors. 5. Contact T1 Network Service or the technician at the remote switch to diagnose the remote DS1 endpoint. 6. Check the physical connectivity of the UDS1 interface circuit packs and the cable. 7. Replace the local UDS1 interface circuit pack, and repeat the test. *More information continues on the next page.*

Continued on next page

Table 10-680. TEST #145 Misframe Alarm Inquiry Test — *Continued*

Error Code	Test Result	Description/Recommendation
1 to 17 *(cont.)*	FAIL *(cont'd.)*	If the UDS1 connects to a line-side terminating device such as a PRI terminal adapter: 1. Retry the command at 1-minute intervals for a maximum of 5 times. 2. Enter the **list measurement ds1-log UUCSS** command to read the error seconds measurement. 3. Verify that the switch DS1 and the line-side terminating device are administered using the same signaling mode, framing mode, and line coding. 4. Investigate the maintenance status of the line-side terminating device. Refer to the 'Line-Side Terminating Device Operating Manual' for information. 5. Contact the vendor of the line-side terminating device to diagnose the equipment. 6. Check the physical connection of the UDS1 interface circuit pack to the terminating device, and check the premise distribution system (or the intra-premise wiring) for physical connection failures. 7. Replace the local UDS1 interface circuit pack and repeat the test.

Continued on next page

Table 10-680. TEST #145 Misframe Alarm Inquiry Test — *Continued*

Error Code	Test Result	Description/Recommendation
	PASS	No Misframe alarm is detected on the UDS1 Interface circuit pack.
0	NO BOARD	The test could not relate the internal ID to the port (no board). This could be due to incorrect translations, no board is inserted, an incorrect board is inserted, or an insane board is inserted. 1. Ensure that the board translations are correct. Execute the **add ds1 UUCSS** command to administer the UDS1 interface if it is not already administered. 2. If the board was already administered correctly, check the error log to determine whether the board is hyperactive. If this is the case, the board is shut down. Reseating the board will re-initialize the board. 3. If the board was found to be correctly inserted in step 1, then issue the **busyout board** command. 4. Issue the **reset board** command. 5. Issue the **release busy board** command. 6. Issue the **test board long** command. This should re-establish the linkage between the internal ID and the port.

Translation Update Test (#146)

The Translation Update Test sends the circuit-pack-level information specified by System Administration to the UDS1 Interface circuit pack. Translation includes the following data administered for a UDS1 Interface circuit pack (see output of **display ds1 UUCSS** command): DS1 Link Length between two DS1 endpoints, Synchronization Source Control, All Zero Suppression, Framing Mode, Signaling Mode, Time Slot Number of 697-Hz Tone, Time Slot Number of 700-Hz Tone, etc.

In G3V3, if a TN464F or later UDS1 circuit pack is combined with a Avaya 120A1 CSU Module or the 401A T1 Sync Splitter to form an Integrated CSU Module/T1 Sync Splitter, this test will also send the administration for this Integrated CSU to the circuit pack to assure the board's translations are correct. The administration of the CSU Module/T1 Sync Splitter is done using the **DS1 Circuit Pack** administration form. Translation for the CSU Module/T1 Sync Splitter includes the following data: Transmit LBO, Receive ALBO, Supply CPE Loopback Jack Power?, etc.

Table 10-681. TEST #146 Translation Update Test

Error Code	Test Result	Description/Recommendation
	ABORT	Internal system error 1. Retry the command at 1-minute interval s a maximum of 5 times.
	FAIL	Internal system software error. 1. Enter the **display ds1 UUCSS** command to verify the UDS1 Interface circuit pack translation.
	PASS	Translation data has been downloaded to the UDS1 Interface circuit pack successfully.
0	NO BOARD	The test could not relate the internal ID to the port (no board). This could be due to incorrect translations, no board is inserted, an incorrect board is inserted, or an insane board is inserted. 1. Ensure that the board translations are correct. Execute the **add ds1 UUCSS** command to administer the UDS1 interface if it is not already administered. 2. If the board was already administered correctly, check the error log to determine whether the board is hyperactive. If this is the case, the board is shut down. Reseating the board will re-initialize the board. 3. If the board was found to be correctly inserted in step 1, then issue the **busyout board** command. 4. Issue the **reset board** command. 5. Issue the **release busy board** command. 6. Issue the **test board long** command. This should re-establish the linkage between the internal ID and the port.

DS1 Board Loopback Test (#1209)

This test is destructive.

The DS1 Board Loopback (BLB) Test causes a loopback at the DS1 board edge and tests DS1 board internal circuitry.

The test is destructive and can only be initiated by a system technician demanded **test ds1-loop UUCSS ds1/csu-loopback-tests** command.

All trunks or ports on the UDS1 Interface circuit pack must be busied out using the system technician **busyout board** command before running the BLB Test.

When the BLB Test is initiated, maintenance software sends an appropriate message to the UDS1 Interface circuit pack to start the test. The board sets up the BLB loopback, transmits a test pattern, and verifies that the pattern is received unaltered through the loopback. If the transmitted and received pattern is different, the test fails.

When the test is complete, all trunks or ports on the TN464GP/TN2464BPTN UDS1 Interface circuit pack are restored to the in-service state after **release board** is entered.

Table 10-682. TEST #1209 DS1 Board Loopback Test

Error Code	Test Result	Description/Recommendation
	ABORT	Internal system error 1. Retry the **test ds1-loop UUCSS ds1/csu-loopback-tests** command at 1-minute intervals a maximum of 5 times.
1005	ABORT	DS1 Board Loopback Test cannot be executed in the current configuration. To run this, the TN464F or later suffix UDS1 must be administered for 24-channel operation. The “Bit Rate” field on the DS1 circuit pack administration form must be set to “1.544” for 24-channel operation.
1015	ABORT	Ports on the UDS1 Interface circuit pack have not been busied out to out-of-service. 1. Enter the **busyout board UUCSS** command to put all trunks or ports of the UDS1 Interface circuit pack into the out-of-service state. 2. Retry the command.
1039	ABORT	The UDS1 Interface circuit pack is providing timing for the system. Executing this test could cause major system disruption. If the UDS1 Interface circuit pack needs to be tested, set the synchronization reference to another DS1 Interface circuit pack or to the Tone-Clock circuit pack via the following command sequence: 1. Issue the **disable synchronization-switch** command. 2. Next, issue the **set synchronization UUCSS** command. 3. Lastly, issue the **enable synchronization-switch** command.

Continued on next page

Table 10-682. TEST #1209 DS1 Board Loopback Test — *Continued*

Error Code	Test Result	Description/Recommendation
1950	ABORT	Another loopback/span test is already executing on the DS1 board or the board is in a network requested loopback mode (Line loopback or Payload loopback). The hardware error log will indicate whether a Customer Loopback Jack Test, Far CSU Loopback Test, or the One-Way Span Test is executing or if the board is in line loopback or payload loopback mode. Only one long-duration loopback/span test can be active at a given time. Thus, if a loopback/span test is already active, that test must be terminated via the **test ds1-loop UUCSS end-loopback/span-test** command in order to execute this test.
2000	ABORT	Response to the test was not received within the allowable time period. This may be due to hyperactivity. Error Type 1538 in the error log indicates hyperactivity. The hyperactive circuit pack is out of service and one or more of the following symptoms may be exhibited. 1. The UDS1-BD tests (such as Test #138 and Test #139) are aborting with error code 2000. 2. The tests run on the ports of this circuit pack are returning a no board result. 3. A **busyout** or a **release** command has no affect on the test results. 4. A **list config** command shows that the circuit pack and the ports are properly installed. **NOTE:** When hyperactivity occurs, the circuit pack is isolated from the system, and all of the trunks for this circuit pack are placed into the out of service state. The system will try to restore the circuit pack within 15 minutes. When no faults are detected for 15 minutes, the UDS1 interface circuit pack is restored to normal operation. All of the trunks for the UDS1 interface circuit pack are then returned to the in service state. Hyperactivity is often caused by the associated facility. In such a case, faults (such as slips, misframes, or blue alarms) would be entered in the error log. In addition, many hardware errors would be logged against the associated trunk circuits. If the facility is OK and the error occurs again after 15 minutes, replace the circuit pack.

Continued on next page

Table 10-682. TEST #1209 DS1 Board Loopback Test — *Continued*

Error Code	Test Result	Description/Recommendation
2100	ABORT	Could not allocate the necessary system resources to run this test. 1. Retry the command at 1-minute intervals for a maximum of 5 times.
	FAIL	UDS1 Interface circuit pack failed the DS1 Board Loopback Test. 1. Retry the **test ds1-loop UUCSS ds1/csu-loopback-tests** command. 2. If the BLB test continues to fail, then replace the UDS1 circuit pack.
	PASS	The BLB test executed successfully. The test pattern was transmitted and received successfully up to the DS1 board edge.
0	NO BOARD	The test could not relate the internal ID to the port (no board). This could be due to incorrect translations, no board is inserted, an incorrect board is inserted, or an insane board is inserted. 1. Ensure that the board translations are correct. Execute the **add ds1 UUCSS** command to administer the UDS1 interface if it is not already administered. 2. If the board was already administered correctly, check the error log to determine whether the board is hyperactive. If this is the case, the board is shut down. Reseating the board will re-initialize the board. 3. If the board was found to be correctly inserted in step 1, then issue the **busyout board** command. 4. Issue the **reset board** command. 5. Issue the **release busy board** command. 6. Issue the **test board long** command. This should re-establish the linkage between the internal ID and the port.

CSU Equipment Loopback Test (#1210)

This test is destructive.

The CSU Equipment Loopback (ELB) Test causes a loopback at the near-edge of the local Avaya 120A1 CSU Module or the 401A T1 Sync Splitter and tests the connection from the DS1 board to the CSU Module/T1 Sync Splitter (DS1 board edge interconnecting cable, and CSU Module/T1 Sync Splitter edge). This test is only performed if the Avaya 120A1 CSU Module or the 401A T1 Sync Splitter is

present, administered, and connected to a 1.544 Mbps DS1 circuit pack on the back of the port carrier.

The test is destructive and can only be initiated by a system technician demanded **test ds1-loop UUCSS ds1/csu-loopback-tests** command.

All trunks or ports on the UDS1 Interface circuit pack must be busied out using the system technician **busyout board** command before running the ELB Test.

When the ELB Test is initiated, maintenance software sends an appropriate message to the UDS1 Interface circuit pack to start the test. The board sets up the ELB loopback, transmits a test pattern, and verifies that the pattern is received unaltered through the loopback. If the transmitted and received pattern is different, the test fails.

When the test is complete, all trunks or ports on the UDS1 Interface circuit pack are restored to the in-service state after the **release board** command is entered.

Table 10-683. TEST #1210 CSU Equipment Loopback Test

Error Code	Test Result	Description/Recommendation
	ABORT	Internal system error 1. Retry the **test ds1-loop UUCSS ds1/csu-loopback-tests** command at 1-minute intervals a maximum of 5 times.
1005	ABORT	CSU Equipment Loopback Test cannot be executed in the current configuration. To run this test, the *Near-End CSU Type* field on the DS1circuit pack administration form must be set to *integrated* and the “Bit Rate” field on the DS1 circuit pack administration form must be set to “1.544” (24-channel configuration). 1. Use the **change ds1 UUCSS** command to set the *Near-End CSU Type* field on the DS1 circuit pack administration form to *integrated*, and/or change the “Bit Rate” field to “1.544” if the board is to be used in 24-channel configuration. 2. Retry the ***test ds1-loop UUCSS ds1/csu-loopback-tests*** command.
1015	ABORT	Ports on the UDS1 Interface circuit pack have not been busied out to out-of-service. 1. Enter the **busyout board UUCSS** command to put all trunks or ports of the UDS1 Interface circuit pack into the out-of-service state. 2. Retry the command.

Continued on next page

Table 10-683. TEST #1210 CSU Equipment Loopback Test — *Continued*

Error Code	Test Result	Description/Recommendation
1039	ABORT	The UDS1 Interface circuit pack is providing timing for the system. Executing this test could cause major system disruption. If the UDS1 Interface circuit pack needs to be tested, set the synchronization reference to another DS1 Interface circuit pack or to the Tone-Clock circuit pack via the following command sequence: 1. Issue the **disable synchronization-switch** command. 2. Next, issue the **set synchronization UUCSS** command. 3. Lastly, issue the **enable synchronization-switch** command.
1950	ABORT	Another loopback/span test is already executing on the DS1 board or the board is in a network requested loopback mode (Line loopback or Payload loopback). The hardware error log will indicate whether a Customer Loopback Jack Test, Far CSU Loopback Test, or the One-Way Span Test is executing or if the board is in line loopback or payload loopback mode. Only one long-duration loopback/span test can be active at a given time. Thus, if a loopback/span test is already active, that test must be terminated using the **test ds1-loop UUCSS end-loopback/span-test** command in order to execute this test.
1951	ABORT	The CSU Equipment Loopback Test could not be executed because the 120A1 CSU Module or the 401A T1 Sync Splitter was not physically installed. Physically connect the 120A1 CSU Module or the 401A T1 Sync Splitter to the UDS1-BD board on the back of the port carrier.

Continued on next page

Table 10-683. TEST #1210 CSU Equipment Loopback Test — *Continued*

Error Code	Test Result	Description/Recommendation
2000	ABORT	Response to the test was not received within the allowable time period. This may be due to hyperactivity. Error Type 1538 in the error log indicates hyperactivity. The hyperactive circuit pack is out of service and one or more of the following symptoms may be exhibited. 1. The UDS1-BD tests (such as Test #138 and Test #139) are aborting with error code 2000. 2. The tests run on the ports of this circuit pack are returning a no board result. 3. A **busyout** or a **release** command has no affect on the test results. 4. A **list config** command shows that the circuit pack and the ports are properly installed. **NOTE:** When hyperactivity occurs, the circuit pack is isolated from the system, and all of the trunks for this circuit pack are placed into the out of service state. The system will try to restore the circuit pack within 15 minutes. When no faults are detected for 15 minutes, the UDS1 interface circuit pack is restored to normal operation. All of the trunks for the UDS1 interface circuit pack are then returned to the in service state. Hyperactivity is often caused by the associated facility. In such a case, faults (such as slips, misframes, or blue alarms) would be entered in the error log. In addition, many hardware errors would be logged against the associated trunk circuits. If the facility is OK and the error occurs again after 15 minutes, replace the circuit pack.
2100	ABORT	Could not allocate the necessary system resources to run this test. 1. Retry the command at 1-minute intervals for a maximum of 5 times.

Continued on next page

Table 10-683. TEST #1210 CSU Equipment Loopback Test — *Continued*

Error Code	Test Result	Description/Recommendation
	FAIL	UDS1 Interface circuit pack failed the CSU Equipment Loopback Test. 1. Retry the **test ds1-loop UUCSS ds1/csu-loopback-tests** command. 2. If the ELB test continues to fail, then either the UDS1-BD board, the CSU Module/T1 Sync Splitter, or the I/O cable between the backplane and the CSU module/T1 Sync Splitter (or any combination thereof) has failed. Attempt to isolate the problem to one of these areas. Begin by replacing the CSU Module/T1 Sync Splitter and running the **test ds1-loop UUCSS ds1/csu-loopback-tests** command again. 3. If the ELB test continues to fail, then replace the UDS1-BD board and run the **test ds1-loop UUCSS ds1/csu-loopback-tests** command again. 4. If the ELB test continues to fail, the problem could be in the I/O cable between the backplane and the CSU module/T1 Sync Splitter.
	PASS	The ELB test executed successfully. The test pattern was transmitted and received successfully over the connection from the DS1 board to the near-edge of the 120A1 CSU Module or the 401A T1 Sync Splitter.
0	NO BOARD	The test could not relate the internal ID to the port (no board). This could be due to incorrect translations, no board is inserted, an incorrect board is inserted, or an insane board is inserted. 1. Ensure that the board translations are correct. Execute the **add ds1 UUCSS** command to administer the UDS1 interface if it is not already administered. 2. If the board was already administered correctly, check the error log to determine whether the board is hyperactive. If this is the case, the board is shut down. Reseating the board will re-initialize the board. 3. If the board was found to be correctly inserted in step 1, then issue the **busyout board** command. 4. Issue the **reset board** command. 5. Issue the **release busy board** command. 6. Issue the **test board long** command. This should re-establish the linkage between the internal ID and the port.

CSU Repeater Loopback Test (#1211)

This test is destructive.

The CSU Repeater Loopback (RLB) Test causes a loopback at the far-edge of the local Avaya 120A1 CSU Module or the 401A T1 Sync Splitter and tests the connection from the DS1 board to and including the CSU Module/T1 Sync Splitter circuitry. This test is only performed if the Avaya 120A1 CSU Module or the 401A T1 Sync Splitter is present, administered, and connected to a 1.544 Mbps DS1 circuit pack on the back of the port carrier.

The test is destructive and can only be initiated by a system technician demanded **test ds1-loop UUCSS ds1/csu-loopback-tests** command.

All trunks or ports on the UDS1 Interface circuit pack must be busied out using the system technician **busyout board** command before running the RLB Test.

When the RLB Test is initiated, maintenance software sends an appropriate message to the UDS1 Interface circuit pack to start the test. The board sets up the RLB loopback, transmits a test pattern, and verifies that the pattern is received unaltered through the loopback. If the transmitted and received pattern is different, the test fails.

When the test is complete, all trunks or ports on the UDS1 Interface circuit pack are restored to the in-service state after **release board** is entered.

Table 10-684. TEST #1211 CSU Repeater Loopback Test

Error Code	Test Result	Description/Recommendation
	ABORT	Internal system error 1. Retry the **test ds1-loop UUCSS ds1/csu-loopback-tests** command at 1-minute intervals a maximum of 5 times.
1005	ABORT	CSU Repeater Loopback Test cannot be executed in the current configuration. To run this test, the `Near-End CSU Type` field on the **DS1Circuit Pack** administration form must be set to `integrated` and the `Bit Rate` field on the **DS1 Circuit Pack** administration form must be set to `1.544` (24-channel configuration). 1. Use the **change ds1 UUCSS** command to set the `Near-End CSU Type` field on the **DS1 Circuit Pack** administration form to `integrated`, and/or change the `Bit Rate` field to `1.544` if the board is to be used in 24-channel configuration. 2. Retry the **test ds1-loop UUCSS ds1/csu-loopback-tests** command.

Continued on next page

Table 10-684. TEST #1211 CSU Repeater Loopback Test — *Continued*

Error Code	Test Result	Description/Recommendation
1015	ABORT	Ports on the UDS1 Interface circuit pack have not been busied out to out-of-service. 1. Enter the **busyout board UUCSS** command to put all trunks or ports of the UDS1 Interface circuit pack into the out-of-service state. 2. Retry the command.
1039	ABORT	The UDS1 Interface circuit pack is providing timing for the system. Executing this test could cause major system disruption. If the UDS1 Interface circuit pack needs to be tested, set the synchronization reference to another DS1 Interface circuit pack or to the Tone-Clock circuit pack via the following command sequence: 1. Issue the **disable synchronization-switch** command. 2. Next, issue the **set synchronization UUCSS** command. 3. Lastly, issue the **enable synchronization-switch** command.
1950	ABORT	Another loopback/span test is already executing on the DS1 board or the board is in a network requested loopback mode (Line loopback or Payload loopback). The hardware error log will indicate whether a Customer Loopback Jack Test, Far CSU Loopback Test, or the One-Way Span Test is executing or if the board is in line loopback or payload loopback mode. Only one long-duration loopback/span tests can be active at a given time. Thus, if a loopback/span test is already active, that test must be terminated using the **test ds1-loop UUCSS end-loopback/span-test** command in order to execute this test.
1951	ABORT	The CSU Repeater Loopback Test could not be executed because the 120A1 CSU Module or the 401A T1 Sync Splitter was not physically installed. Physically connect the 120A1 CSU Module or the 401A T1 Sync Splitter to the UDS1 board on the back of the port carrier.

Continued on next page

Table 10-684. TEST #1211 CSU Repeater Loopback Test — *Continued*

Error Code	Test Result	Description/Recommendation
2000	ABORT	Response to the test was not received within the allowable time period. This may be due to hyperactivity. Error Type 1538 in the error log indicates hyperactivity. The hyperactive circuit pack is out of service and one or more of the following symptoms may be exhibited. 1. The UDS1-BD tests (such as Test #138 and Test #139) are aborting with error code 2000. 2. The tests run on the ports of this circuit pack are returning a no board result. 3. A **busyout** or a **release** command has no affect on the test results. 4. A **list config** command shows that the circuit pack and the ports are properly installed. **NOTE:** When hyperactivity occurs, the circuit pack is isolated from the system, and all of the trunks for this circuit pack are placed into the out of service state. The system will try to restore the circuit pack within 15 minutes. When no faults are detected for 15 minutes, the UDS1 interface circuit pack is restored to normal operation. All of the trunks for the UDS1 interface circuit pack are then returned to the in service state. Hyperactivity is often caused by the associated facility. In such a case, faults (such as slips, misframes, or blue alarms) would be entered in the error log. In addition, many hardware errors would be logged against the associated trunk circuits. If the facility is OK and the error occurs again after 15 minutes, replace the circuit pack.
2100	ABORT	Could not allocate the necessary system resources to run this test. 1. Retry the command at 1-minute intervals for a maximum of 5 times.
	FAIL	UDS1 Interface circuit pack failed the CSU Repeater Loopback Test. 1. Retry the **test ds1-loop UUCSS ds1/csu-loopback-tests** command. 2. If the RLB test continues to fail, and the CSU Equipment Loopback Test (#1210) passed, then replace the CSU Module/T1 Sync Splitter.

Continued on next page

Table 10-684. TEST #1211 CSU Repeater Loopback Test — *Continued*

Error Code	Test Result	Description/Recommendation
	PASS	The RLB test executed successfully. The test pattern was transmitted and received successfully over the connection from the UDS1 board to the far-edge of the 120A1 CSU Module or the 401A T1 Sync Splitter.
0	NO BOARD	The test could not relate the internal ID to the port (no board). This could be due to incorrect translations, no board is inserted, an incorrect board is inserted, or an insane board is inserted. 1. Ensure that the board translations are correct. Execute the **add ds1 UUCSS** command to administer the UDS1 interface if it is not already administered. 2. If the board was already administered correctly, check the error log to determine whether the board is hyperactive. If this is the case, the board is shut down. Reseating the board will re-initialize the board. 3. If the board was found to be correctly inserted in step 1, then issue the **busyout board** command. 4. Issue the **reset board** command. 5. Issue the **release busy board** command. 6. Issue the **test board long** command. This should re-establish the linkage between the internal ID and the port.

CPE Loopback Jack Test (#1212)

This test is destructive.

The CPE Loopback Jack (CLJ-LB) Test causes a loopback at the CPE Loopback Jack and tests the building wiring connection between the UDS1-BD DS1 board and the CPE Loopback Jack.

The test is highly destructive and can only be initiated by a system technician demanded ***test ds1-loop UUCSS cpe-loopback-jack-test-begin [number-of-bits bit-pattern]*** command. The System technician has the choice of entering a loopback activation code on the command line or using the default code *0x47F*.

All trunks or ports on the UDS1 Interface circuit pack must be busied out using the system technician **busyout board** command before running the CPE Loopback Jack Test.

The CPE Loopback Jack Test has the UDS1 Interface circuit pack transmit a loopback activation code to the CPE Loopback Jack, waits up to 10 seconds for return of the code to verify the loopback has been established, transmits a framed 3-in-24 test pattern, begins counting bit errors in the received test pattern, and returns a PASS result to indicate that the pattern was successfully sent. If the loopback is not established within the 10 seconds, the test returns FAIL or abort.

The status of the CPE Loopback Jack test is available in the hardware error log via Error Type 3900. Several distinct Aux values give the user information on the status of the test.

The **list measurements ds1 summary** command will display the length of time the test has been running (`Test Duration` field) and number of bit errors detected (`Loopback/Span Test Bit-Error Count` field). If the test pattern is being passed through the loopback cleanly, the number of bit errors should be very low. The command will also display the type of Loopback/Span test executing (`Test` field), the type of pattern generated for the Loopback/Span test (`Pattern` field), and whether the pattern (i.e. 3-in-24 Pattern) is synchronized (`Synchronized` field).

To terminate the test, use **test ds1-loop UUCSS end-loopback/span-test** or **release board**. Using **release board** restores all trunks or ports on the UDS1 Interface circuit pack to the in-service state.

Table 10-685. TEST #1212 CPE Loopback Jack Test

Error Code	Test Result	Description/Recommendation
	ABORT	Internal system error 1. Retry the **test ds1-loop UUCSS cpe-loopback-jack-test-begin** command at 1-minute intervals a maximum of 5 times.
1005	ABORT	CPE Loopback Jack Test cannot be executed in the current configuration. To run this test, the TN464F or later suffix UDS1 must be administered for 24-channel operation. The “Bit Rate” field on the DS1 circuit pack administration form must be set to “1.544” for 24-channel operation.
1015	ABORT	Ports on the UDS1 Interface circuit pack have not been busied out to out-of-service. 1. Enter the **busyout board UUCSS** command to put all trunks or ports of the UDS1 Interface circuit pack into the out-of-service state. 2. Retry the command.

Continued on next page

Table 10-685. TEST #1212 CPE Loopback Jack Test — *Continued*

Error Code	Test Result	Description/Recommendation
1039	ABORT	The UDS1 Interface circuit pack is providing timing for the system. Executing this test could cause major system disruption. If the UDS1 Interface circuit pack needs to be tested, set the synchronization reference to another DS1 Interface circuit pack or to the Tone-Clock circuit pack via the following command sequence: 1. Issue the **disable synchronization-switch** command. 2. Next, issue the **set synchronization UUCSS** command. 3. Lastly, issue the **enable synchronization-switch** command.
1950	ABORT	Another loopback/span test is already executing on the DS1 board or the board is in a network requested loopback mode (Line loopback or Payload loopback). The hardware error log will indicate whether a Customer Loopback Jack Test, Far CSU Loopback Test, or the One-Way Span Test is executing or if the board is in line loopback or payload loopback mode. Only one long-duration loopback/span test can be active at a given time. Thus, if a loopback/span test is already active, that test must be terminated using the **test ds1-loop UUCSS end-loopback/span-test** command in order to execute this test.

Continued on next page

Table 10-685. TEST #1212 CPE Loopback Jack Test — *Continued*

Error Code	Test Result	Description/Recommendation
2000	ABORT	Response to the test was not received within the allowable time period. This may be due to hyperactivity. Error Type 1538 in the error log indicates hyperactivity. The hyperactive circuit pack is out of service and one or more of the following symptoms may be exhibited. 1. The UDS1-BD tests (such as Test #138 and Test #139) are aborting with error code 2000. 2. The tests run on the ports of this circuit pack are returning a no board result. 3. A **busyout** or a **release** command has no affect on the test results. 4. A **list config** command shows that the circuit pack and the ports are properly installed. **NOTE:** When hyperactivity occurs, the circuit pack is isolated from the system, and all of the trunks for this circuit pack are placed into the out of service state. The system will try to restore the circuit pack within 15 minutes. When no faults are detected for 15 minutes, the UDS1 interface circuit pack is restored to normal operation. All of the trunks for the UDS1 interface circuit pack are then returned to the in service state. Hyperactivity is often caused by the associated facility. In such a case, faults (such as slips, misframes, or blue alarms) would be entered in the error log. In addition, many hardware errors would be logged against the associated trunk circuits. If the facility is OK and the error occurs again after 15 minutes, replace the circuit pack.
2100	ABORT	Could not allocate the necessary system resources to run this test. 1. Retry the command at 1-minute intervals for a maximum of 5 times.

Continued on next page

Table 10-685. TEST #1212 CPE Loopback Jack Test — *Continued*

Error Code	Test Result	Description/Recommendation
2	FAIL	The CLJ-LB test failed because it was not set up properly. The UDS1 interface pack could not successfully put the CPE loopback jack into loopback mode. 1. Rerun the **test ds1-loop UUCSS cpe-loopback-jack-test-begin** command. 2. If the test continues to fail, the problem could be with the UDS1-BD board, the CPE loopback jack equipment, or somewhere between. Run the **test ds1-loop UUCSS ds1/csu-loopback-tests** command to determine if the loopback tests that are closer to the UDS1-BD board are successful. If any of these tests fail, follow the maintenance strategy that is associated with the test that fails.
3	FAIL	The CPE Loopback Jack Test was not set up properly. The framed 3-in-24 test pattern, generated by the UDS1 Interface circuit pack and looped back through the CPE Loopback Jack, could not be detected properly by the UDS1 circuit pack. 1. Retry the **test ds1-loop UUCSS cpe-loopback-jack-test-begin** command. 2. If the CPE Loopback Jack test continues to fail, the problem could be with the UDS1-BD board, the CPE Loopback Jack equipment, or somewhere in between. Run the **test ds1-loop UUCSS ds1/csu-loopback-tests** command to see if the loopback tests closer to the UDS1-BD board are successful. If any of those loopback tests fail, follow the maintenance strategy associated with those loopbacks.

Continued on next page

Table 10-685. TEST #1212 CPE Loopback Jack Test — *Continued*

Error Code	Test Result	Description/Recommendation
	PASS	The CPE Loopback Jack test has successfully began executing. The test will continue to run until the system technician enters the **test ds1-loop UUCSS end-loopback/span-test** command or the **release board UUCSS** command.
0	NO BOARD	The test could not relate the internal ID to the port (no board). This could be due to incorrect translations, no board is inserted, an incorrect board is inserted, or an insane board is inserted. 1. Ensure that the board translations are correct. Execute the **add ds1 UUCSS** command to administer the UDS1 interface if it is not already administered. 2. If the board was already administered correctly, check the error log to determine whether the board is hyperactive. If this is the case, the board is shut down. Reseating the board will re-initialize the board. 3. If the board was found to be correctly inserted in step 1, then issue the **busyout board** command. 4. Issue the **reset board** command. 5. Issue the **release busy board** command. 6. Issue the **test board long** command. This should re-establish the linkage between the internal ID and the port.

Far CSU Loopback Test (#1213)

This test is destructive.

The Far CSU Loopback (R-LLB) Test causes a loopback at the far-end CSU and tests all circuitry and facilities from the local DS1 board to the far-end CSU.

The test is destructive and can only be initiated by a system technician demanded **test ds1-loop UUCSS far-csu-loopback-test-begin** command.

All trunks or ports on the UDS1 Interface circuit pack must be busied out using the system technician **busyout board** command before running the Far CSU Loopback Test.

If the far-end CSU is not a Avaya 120A1 CSU Module or the 401A T1 Sync Splitter, and the DS1 is administered for ami-zcs line coding, density protection must be disabled on the CSU/T1SS during the test due to the large number of zero's in the 3-in-24 test pattern.

The Far CSU Loopback Test has the UDS1 Interface circuit pack transmit a loopback activation code to the remote CSU, waits up to 15 seconds for return of the code to verify the loopback has been established, transmits a framed 3-in-24 test pattern, begins counting bit errors in the received test pattern, and returns a PASS result. If the loopback is not established within the 15 seconds, the test fails.

The status of the Far CSU Loopback test is available in the hardware error log via Error Type 3901. Several distinct Aux values give the user information of the status of the test.

The **list measurements ds1 summary** command will display the length of time the test has been running (`Test Duration` field) and number of bit errors detected (`Loopback/Span Test Bit-Error Count` field). If the test pattern is being passed through the loopback cleanly, the number of bit errors should be very low. The command will also display the type of Loopback/Span test executing (`Test` field), the type of pattern generated for the type of Loopback/Span test (`Pattern` field), and whether the pattern (i.e. 3-in-24 Pattern) is synchronized (`Synchronized` field).

To terminate the test, enter **test ds1-loop UUCSS end-loopback/span-test** or **release board**. Using the **release board** command will restore all trunks or ports on the UDS1 Interface circuit pack to the in-service state.

Table 10-686. TEST #1213 Far CSU Loopback Test

Error Code	Test Result	Description/Recommendation
	ABORT	Internal system error 1. Retry the **test ds1-loop UUCSS far-csu-loopback-test-begin** command at 1-minute intervals a maximum of 5 times.
1005	ABORT	Far CSU Loopback Test cannot be executed in the current configuration. To run this, the TN464F or later suffix UDS1 must be administered for 24-channel operation. The “Bit Rate” field on the DS1 circuit pack administration form must be set to “1.544” for 24-channel operation.
1015	ABORT	Ports on the UDS1 Interface circuit pack have not been busied out to out-of-service. 1. Enter the **busyout board UUCSS** command to put all trunks or ports of the UDS1 Interface circuit pack into the out-of-service state. 2. Retry the command.

Continued on next page

Table 10-686. TEST #1213 Far CSU Loopback Test — *Continued*

Error Code	Test Result	Description/Recommendation
1039	ABORT	The UDS1 Interface circuit pack is providing timing for the system. Executing this test could cause major system disruption. If the UDS1 Interface circuit pack needs to be tested, set the synchronization reference to another DS1 Interface circuit pack or to the Tone-Clock circuit pack via the following command sequence: 1. Issue the **disable synchronization-switch** command. 2. Next, issue the **set synchronization UUCSS** command. 3. Lastly, issue the **enable synchronization-switch** command.
1950	ABORT	Another loopback/span test is already executing on the DS1 board or the board is in a network requested loopback mode (Line loopback or Payload loopback). The hardware error log will indicate whether a Customer Loopback Jack Test, Far CSU Loopback Test, or the One-Way Span Test is executing or if the board is in line loopback or payload loopback mode. Only one long-duration loopback/span test can be active at a given time. Thus, if a loopback/span test is already active, that test must be terminated using the **test ds1-loop UUCSS end-loopback/span-test** command in order to execute this test.

Continued on next page

Table 10-686. TEST #1213 Far CSU Loopback Test — *Continued*

Error Code	Test Result	Description/Recommendation
2000	ABORT	Response to the test was not received within the allowable time period. This may be due to hyperactivity. Error Type 1538 in the error log indicates hyperactivity. The hyperactive circuit pack is out of service and one or more of the following symptoms may be exhibited. 1. The UDS1-BD tests (such as Test #138 and Test #139) are aborting with error code 2000. 2. The tests run on the ports of this circuit pack are returning a no board result. 3. A **busyout** or a **release** command has no affect on the test results. 4. A **list config** command shows that the circuit pack and the ports are properly installed. **NOTE:** When hyperactivity occurs, the circuit pack is isolated from the system, and all of the trunks for this circuit pack are placed into the out of service state. The system will try to restore the circuit pack within 15 minutes. When no faults are detected for 15 minutes, the UDS1 interface circuit pack is restored to normal operation. All of the trunks for the UDS1 interface circuit pack are then returned to the in service state. Hyperactivity is often caused by the associated facility. In such a case, faults (such as slips, misframes, or blue alarms) would be entered in the error log. In addition, many hardware errors would be logged against the associated trunk circuits. If the facility is OK and the error occurs again after 15 minutes, replace the circuit pack.
2100	ABORT	Could not allocate the necessary system resources to run this test. 1. Retry the command at 1-minute intervals for a maximum of 5 times.

Continued on next page

Table 10-686. TEST #1213 Far CSU Loopback Test — *Continued*

Error Code	Test Result	Description/Recommendation
2	FAIL	The test failed because it was not set up properly. The UDS1 pack could not successfully put the far-end CSU into loopback mode. 1. Rerun the **test ds1-loop UUCSS far-csu-loopback-test-begin** command. 2. If the test continues to fail, the problem could be with the UDS1-BD board, the CPE loopback jack equipment, or somewhere between. Run the **test ds1-loop UUCSS cpe-loopback-jack-test-begin** command to determine if the CPE loopback jack loopback test is successful. If a CPE loopback jack device is not being used, issue the **test ds1-loop UUCSS ds1/csu-loopback-tests** command instead. If the closer loopback test fails, follow the maintenance strategy associated with that test.
3	FAIL	The Far CSU Loopback Test was not set up properly. The framed 3-in-24 test pattern, generated by the UDS1 Interface circuit pack and looped back through the far-end CSU, could not be detected properly by the UDS1 circuit pack. 1. Retry the **test ds1-loop UUCSS far-csu-loopback-test-begin** command. 2. If the Far CSU Loopback test continues to fail with this error code, the problem could be with the UDS1-BD board, the far-end CSU equipment, or somewhere in between. Run the **test ds1-loop UUCSS cpe-loopback-jack-test-begin** command to see if the CPE Loopback Jack test which is closer to the UDS1-BD board is successful. (If a CPE Loopback Jack device is not being used, then run the **test ds1-loop UUCSS ds1/csu-loopback-tests** command to see if these even closer loopback tests succeed). If the closer loopback test fails, follow the maintenance strategy associated with that loopback.

Continued on next page

Table 10-686. TEST #1213 Far CSU Loopback Test — *Continued*

Error Code	Test Result	Description/Recommendation
	PASS	The Far CSU Loopback test has successfully began executing. The test will continue to run until the system technician enters the **test ds1-loop UUCSS end-loopback/span-test** command or the **release board UUCSS** command.
0	NO BOARD	The test could not relate the internal ID to the port (no board). This could be due to incorrect translations, no board is inserted, an incorrect board is inserted, or an insane board is inserted. 1. Ensure that the board translations are correct. Execute the **add ds1 UUCSS** command to administer the UDS1 interface if it is not already administered. 2. If the board was already administered correctly, check the error log to determine whether the board is hyperactive. If this is the case, the board is shut down. Reseating the board will re-initialize the board. 3. If the board was found to be correctly inserted in step 1, then issue the **busyout board** command. 4. Issue the **reset board** command. 5. Issue the **release busy board** command. 6. Issue the **test board long** command. This should re-establish the linkage between the internal ID and the port.

One-Way Span Test (#1214)

This test is destructive.

The One-Way Span Test allows one-way span testing to and from remote test equipment or another DEFINITY communications system. This tests all circuitry and facilities from the local DS1 board to the remote test equipment or other DEFINITY communications system.

The test is destructive and can only be initiated by a system technician demanded **test ds1-loop UUCSS one-way-span-test-begin** command.

All trunks or ports on the UDS1 Interface circuit pack must be busied out using the system technician **busyout board** command before running the One-Way Span Test.

The One-Way Span Test has the UDS1 Interface circuit pack transmit a framed 3-in-24 test pattern and attempt to receive and verify the pattern. If the UDS1-BD board receives a framed 3-in-24 test pattern sent from another DEFINITY G3V3 or test equipment at the far-end of the DS1, it begins counting bit errors within the received pattern.

The status of the One-Way Span test is available in the hardware error log via Error Type 3902. Several distinct Aux values give the user information of the status of the test.

The **list measurements ds1 summary** command will display the length of time the test has been running (`Test Duration` field) and number of bit errors detected (`Loopback/Span Test Bit-Error Count` field). If the test pattern is being sent cleanly over the span from the far-end, the number of bit errors should be very low. The `Test Duration` field will show `0` until the test pattern is received from the far-end. Upon receiving the test pattern, the board will begin calculating the test duration and number of bit errors. The command will also display the Loopback/Span test executing (`Test` field), the type of pattern generated for the Loopback/Span test (`Pattern` field), and whether the pattern (i.e. 3-in-24 Pattern) is synchronized (`Synchronized` field).

To terminate the test, enter **test ds1-loop UUCSS end-loopback/span-test** or **release board**. Using **release board** restores all trunks or ports on the UDS1 Interface circuit pack to the in-service state.

Table 10-687. TEST #1214 One-Way Span Test

Error Code	Test Result	Description/Recommendation
	ABORT	Internal system error 1. Retry the **test ds1-loop UUCSS one-way-span-test-begin** command at 1-minute intervals a maximum of 5 times.
1005	ABORT	One-Way Span Test cannot be executed in the current configuration. To run this, the TN464F or later suffix UDS1 must be administered for 24-channel operation. The “Bit Rate” field on the DS1 circuit pack administration form must be set to “1.544” for 24-channel operation.
1015	ABORT	Ports on the UDS1 Interface circuit pack have not been busied out to out-of-service. 1. Enter the **busyout board UUCSS** command to put all trunks or ports of the UDS1 Interface circuit pack into the out-of-service state. 2. Retry the command.

Continued on next page

Table 10-687. TEST #1214 One-Way Span Test — *Continued*

Error Code	Test Result	Description/Recommendation
1039	ABORT	The UDS1 Interface circuit pack is providing timing for the system. Executing this test could cause major system disruption. If the UDS1 Interface circuit pack needs to be tested, set the synchronization reference to another DS1 Interface circuit pack or to the Tone-Clock circuit pack via the following command sequence: 1. Issue the **disable synchronization-switch** command. 2. Next, issue the **set synchronization UUCSS** command. 3. Lastly, issue the **enable synchronization-switch** command.
1950	ABORT	Another loopback/span test is already executing on the DS1 board or the board is in a network requested loopback mode (Line loopback or Payload loopback). The hardware error log will indicate whether a Customer Loopback Jack Test, Far CSU Loopback Test, or the One-Way Span Test is executing or if the board is in line loopback or payload loopback mode. Only one long-duration loopback/span test can be active at a given time. Thus, if a loopback/span test is already active, that test must be terminated using the **test ds1-loop UUCSS end-loopback/span-test** command in order to execute this test.

Continued on next page

Table 10-687. TEST #1214 One-Way Span Test — *Continued*

Error Code	Test Result	Description/Recommendation
2000	ABORT	Response to the test was not received within the allowable time period. This may be due to hyperactivity. Error Type 1538 in the error log indicates hyperactivity. The hyperactive circuit pack is out of service and one or more of the following symptoms may be exhibited. 1. The UDS1-BD tests (such as Test #138 and Test #139) are aborting with error code 2000. 2. The tests run on the ports of this circuit pack are returning a no board result. 3. A **busyout** or a **release** has no affect on the test results. 4. A **list config** command shows that the circuit pack and the ports are properly installed. **NOTE:** When hyperactivity occurs, the circuit pack is isolated from the system, and all of the trunks for this circuit pack are placed into the out of service state. The system will try to restore the circuit pack within 15 minutes. When no faults are detected for 15 minutes, the UDS1 interface circuit pack is restored to normal operation. All of the trunks for the UDS1 interface circuit pack are then returned to the in service state. Hyperactivity is often caused by the associated facility. In such a case, faults (such as slips, misframes, or blue alarms) would be entered in the error log. In addition, many hardware errors would be logged against the associated trunk circuits. If the facility is OK and the error occurs again after 15 minutes, replace the circuit pack.
2100	ABORT	Could not allocate the necessary system resources to run this test. 1. Retry the command at 1-minute intervals for a maximum of 5 times.

Continued on next page

Table 10-687. TEST #1214 One-Way Span Test — *Continued*

Error Code	Test Result	Description/Recommendation
	PASS	The One-Way Span test has successfully began transmitting a framed 3-in-24 test pattern. The test will continue to run until the system technician enters the **test ds1-loop UUCSS end-loopback/span-test** command or the **release board UUCSS** command.
0	NO BOARD	The test could not relate the internal ID to the port (no board). This could be due to incorrect translations, no board is inserted, an incorrect board is inserted, or an insane board is inserted. 1. Ensure that the board translations are correct. Execute the **add ds1 UUCSS** command to administer the UDS1 interface if it is not already administered. 2. If the board was already administered correctly, check the error log to determine whether the board is hyperactive. If this is the case, the board is shut down. Reseating the board will re-initialize the board. 3. If the board was found to be correctly inserted in step 1, then issue the **busyout board** command. 4. Issue the **reset board** command. 5. Issue the **release busy board** command. 6. Issue the **test board long** command. This should re-establish the linkage between the internal ID and the port.

Inject Single Bit Error Test (#1215). This test is destructive.

The Inject Single Bit Error Test causes a single bit error to be sent within an active framed 3-in-24 test pattern.

The test is highly destructive and can only be initiated by a system technician demanded **test ds1-loop UUCSS inject-single-bit-error** command. An attempt to use this command will be rejected if none of the three long-duration DS1 loopback/span tests (CPE Loopback Jack Test, Far CSU Loopback Test, One-Way Span Test) are active on a UDS1-BD circuit pack.

All trunks or ports on the UDS1 Interface circuit pack must be busied out using the system technician **busyout board** command before running the Inject Single Bit Error Test.

The **list measurements ds1 summary** command displays the number of bit errors detected (`Loopback/Span Test Bit-Error Count` field). Injecting this single bit error should increment the bit error count of the loopback/span test by one.

Table 10-688. TEST #1215 Inject Single Bit Error Test

Error Code	Test Result	Description/Recommendation
	ABORT	Internal system error 1. Retry the **test ds1-loop UUCSS inject-single-bit-error** command at 1-minute intervals a maximum of 5 times.
1015	ABORT	Ports on the UDS1 Interface circuit pack have not been busied out to out-of-service. 1. Enter the **busyout board UUCSS** command to put all trunks or ports of the UDS1 Interface circuit pack into the out-of-service state. 2. Retry the command.

Continued on next page

Table 10-688. TEST #1215 Inject Single Bit Error Test — *Continued*

Error Code	Test Result	Description/Recommendation
2000	ABORT	Response to the test was not received within the allowable time period. This may be due to hyperactivity. Error Type 1538 in the error log indicates hyperactivity. The hyperactive circuit pack is out of service and one or more of the following symptoms may be exhibited. 1. The UDS1-BD tests (such as Test #138 and Test #139) are aborting with error code 2000. 2. The tests run on the ports of this circuit pack are returning a no board result. 3. A **busyout** or a **release** command has no affect on the test results. 4. A **list config** command shows that the circuit pack and the ports are properly installed. **NOTE:** When hyperactivity occurs, the circuit pack is isolated from the system, and all of the trunks for this circuit pack are placed into the out of service state. The system will try to restore the circuit pack within 15 minutes. When no faults are detected for 15 minutes, the UDS1 interface circuit pack is restored to normal operation. All of the trunks for the UDS1 interface circuit pack are then returned to the in service state. Hyperactivity is often caused by the associated facility. In such a case, faults (such as slips, misframes, or blue alarms) would be entered in the error log. In addition, many hardware errors would be logged against the associated trunk circuits. If the facility is OK and the error occurs again after 15 minutes, replace the circuit pack.
2100	ABORT	Could not allocate the necessary system resources to run this test. 1. Retry the command at 1-minute intervals for a maximum of 5 times.

Continued on next page

Table 10-688. TEST #1215 Inject Single Bit Error Test — *Continued*

Error Code	Test Result	Description/Recommendation
	PASS	A single bit error has been successfully injected into an active framed 3-in-24 test pattern.
0	NO BOARD	The test could not relate the internal ID to the port (no board). This could be due to incorrect translations, no board is inserted, an incorrect board is inserted, or an insane board is inserted. 1. Ensure that the board translations are correct. Execute the **add ds1 UUCSS** command to administer the UDS1 interface if it is not already administered. 2. If the board was already administered correctly, check the error log to determine whether the board is hyperactive. If this is the case, the board is shut down. Reseating the board will re-initialize the board. 3. If the board was found to be correctly inserted in step 1, then issue the **busyout board** command. 4. Issue the **reset board** command. 5. Issue the **release busy board** command. 6. Issue the **test board long** command. This should re-establish the linkage between the internal ID and the port.

End Loopback/Span Test (#1216)

This test is destructive.

The End Loopback/Span Test terminates an active loopback or span test on a UDS1 circuit pack. Bit error counting against the received test pattern stream is terminated and sending of the framed 3-in-24 test pattern is halted. If either the CPE Loopback Jack or the far-end CSU is looped, the appropriate loopback deactivate code is sent. If the loopback cannot be deactivated, then the test returns FAIL, and a MINOR alarm is noted in the alarm log until the loopback is cleared.

The test is highly destructive and can only be initiated by a system technician demanded **test ds1-loop UUCSS end-loopback/span-test** command. Since only one of these three different long-duration loopback/span tests can be active at a time, the UDS1-BD circuit pack knows which loopback/span test to terminate.

All trunks or ports on the UDS1 Interface circuit pack must be busied out using the system technician **busyout board** command before running this End Loopback/Span Test.

The **list measurements ds1 summary** command will display the length of time the test ran (`Test Duration` field) and number of bit errors detected (`Loopback/Span Test Bit-Error Count` field).

To restore the trunks or ports on the UDS1 Interface circuit pack to the in-service state, execute **release board**.

Table 10-689. TEST #1216 End Loopback/Span Test

Error Code	Test Result	Description/Recommendation
	ABORT	Internal system error 1. Retry the **test ds1-loop UUCSS end-loopback/span-test** command at 1-minute intervals a maximum of 5 times.
1005	ABORT	End Loopback/Span Test cannot be executed in the current configuration. To run this test, the TN464F or later suffix DS1 board must be administered for 24-channel operation. The “Bit Rate” field on the DS1 circuit pack administration form must be set to “1.544” for 24-channel operation.
1015	ABORT	Ports on the UDS1 Interface circuit pack have not been busied out to out-of-service. 1. Enter the **busyout board UUCSS** command to put all trunks or ports of the UDS1 Interface circuit pack into the out-of-service state. 2. Retry the command.

Continued on next page

Table 10-689. TEST #1216 End Loopback/Span Test — *Continued*

Error Code	Test Result	Description/Recommendation
2000	ABORT	Response to the test was not received within the allowable time period. This may be due to hyperactivity. Error Type 1538 in the error log indicates hyperactivity. The hyperactive circuit pack is out of service and one or more of the following symptoms may be exhibited. 1. The UDS1-BD tests (such as Test #138 and Test #139) are aborting with error code 2000. 2. The tests run on the ports of this circuit pack are returning a no board result. 3. A **busyout** or a **release** command has no affect on the test results. 4. A **list config** command shows that the circuit pack and the ports are properly installed. **NOTE:** When hyperactivity occurs, the circuit pack is isolated from the system, and all of the trunks for this circuit pack are placed into the out of service state. The system will try to restore the circuit pack within 15 minutes. When no faults are detected for 15 minutes, the UDS1 interface circuit pack is restored to normal operation. All of the trunks for the UDS1 interface circuit pack are then returned to the in service state. Hyperactivity is often caused by the associated facility. In such a case, faults (such as slips, misframes, or blue alarms) would be entered in the error log. In addition, many hardware errors would be logged against the associated trunk circuits. If the facility is OK and the error occurs again after 15 minutes, replace the circuit pack.
2100	ABORT	Could not allocate the necessary system resources to run this test. 1. Retry the command at 1-minute intervals for a maximum of 5 times.
1313	FAIL	The UDS1 circuit pack could not deactivate the loopback through the Customer Loopback Jack. 1. Retry the **test ds1-loop UUCSS end-loopback/span-test** command at 1-minute intervals for a maximum of 5 times.

Continued on next page

Table 10-689. TEST #1216 End Loopback/Span Test — *Continued*

Error Code	Test Result	Description/Recommendation
1314	FAIL	The UDS1 circuit pack could not deactivate the loopback through the far-end CSU. 1. Make sure that the far-end DS1 is installed if the far-end CSU is a 120A1 Avaya CSU Module/T1 Sync Splitter. 2. Retry the ***test ds1-loop UUCSS end-loopback/span-test*** command at 1-minute intervals for a maximum of 5 times.
	PASS	The active long-duration loopback or span test on the UDS1-BD circuit pack was successfully terminated.
0	NO BOARD	The test could not relate the internal ID to the port (no board). This could be due to incorrect translations, no board is inserted, an incorrect board is inserted, or an insane board is inserted. 1. Ensure that the board translations are correct. Execute the **add ds1 UUCSS** command to administer the UDS1 interface if it is not already administered. 2. If the board was already administered correctly, check the error log to determine whether the board is hyperactive. If this is the case, the board is shut down. Reseating the board will re-initialize the board. 3. If the board was found to be correctly inserted in step 1, then issue the **busyout board** command. 4. Issue the **reset board** command. 5. Issue the **release busy board** command. 6. Issue the **test board long** command. This should re-establish the linkage between the internal ID and the port.

ICSU Status LEDs Test (#1227)

The UDS1 circuit pack has four status LEDs on the faceplate in addition to the three standard faceplate LEDs. These four status LEDs are associated with the 120A1 Channel Service Unit (CSU) Module that can be connected to the UDS1-BD board through the I/O connector panel on the back of the port carrier. The UDS1-BD circuit pack, combined with the 120A1 CSU Module or the 401A T1 Sync Splitter, forms an Integrated CSU (I-CSU).

This test is a visual test. It lights the four status LEDs red for 5 seconds, then lights them green for 5 seconds, then lights them yellow for 5 seconds, then turns the LEDs off and returns control of the status LEDs to the circuit pack.

This test is only be executed on TN464F or later suffix UDS1 circuit packs administered for 24-channel operation (1.544 bit rate).

If the 120A1 CSU Module or the 401A T1 Sync Splitter is not physically installed, the status LEDs are always off and this test aborts.

Table 10-690. TEST #1227 ICSU Status LEDs Test

Error Code	Test Result	Description/Recommendation
	ABORT	Internal system error 1. Retry the command at 1-minute intervals a maximum of 5 times.
1005	ABORT	The ICSU Status LEDs test can not be executed for the current configuration. The test applies only to TN464F or later UDS1 circuit packs administered for 24-channel operation (1.544 bit rate). 1. If the circuit pack is a TN464F or later suffix UDS1 circuit pack, then retry the command.
1951	ABORT	The ICSU Status LEDs Test can not be executed because a 120A1 or later suffix CSU Module or a 401A or later suffix T1 Sync Splitter is not physically installed. If using a 120A1 CSU Module or the 401A T1 Sync Splitter, physically connect it to the UDS1-BD board on the back of the port carrier. Otherwise, ignore this abort.
2100	ABORT	Could not allocate the necessary system resources to run this test. 1. Retry the command at 1-minute intervals for a maximum of 5 times.
2500	ABORT	Internal system error. 1. Retry the command.

Continued on next page

Table 10-690. TEST #1227 ICSU Status LEDs Test — *Continued*

Error Code	Test Result	Description/Recommendation
	PASS	The ICSU Status LEDs test executed successfully. A PASS result, however, does not necessarily mean that the status LEDs behaved properly. It only means that the software successfully attempted to light the status LEDs. This is a visual test. The service technician must visually exam the behavior of the LEDs while the test is running. The LEDs are functioning properly if the four status LEDs are lit red for 5 seconds, then lit green for 5 seconds, then lit yellow for 5 seconds. If the LEDs behave differently, the board should be replaced at the customer's convenience.
0	NO BOARD	The test could not relate the internal ID to the port (no board). This could be due to incorrect translations, no board is inserted, an incorrect board is inserted, or an insane board is inserted. 1. Ensure that the board translations are correct. Execute the **add ds1 UUCSS** command to administer the UDS1 interface if it is not already administered. 2. If the board was already administered correctly, check the error log to determine whether the board is hyperactive. If this is the case, the board is shut down. Reseating the board will re-initialize the board. 3. If the board was found to be correctly inserted in step 1, then issue the **busyout board** command. 4. Issue the **reset board** command. 5. Issue the **release busy board** command. 6. Issue the **test board long** command. This should re-establish the linkage between the internal ID and the port.

Echo Canceller Test (#1420)

This test is destructive.

NOTE:
This test is executed only for TN464GP/TN2464BP circuit packs that have been administered on the DS1 circuit pack form to provide echo cancellation. The TN464GP/TN2464BP must be busied out before this demand test is run.

This test is for the TN464GP and TN2464BP circuit packs. The test originates from a manually initiated **test board long** demand test of a TN464GP/TN2464BP circuit pack. The test instructs firmware to test the echo cancellation circuity. The TN464GP/TN2464BP firmware tests echo cancellation on a subset of channels. If any channel fails twice, or if any two channels fail once, the test fails, and echo cancellation is bypassed on all channels of the board. Otherwise the test passes, and echo cancellation is configured to the administered parameters.

Table 10-691. TEST #1420 Echo Canceller Test

Error Code	Test Result	Description/Recommendation
1015	ABORT	The board is not busied out. This test will abort if the UDS1 circuit pack under test is in service.
2000	ABORT	Response to the test was not received within the allowable time period. This may be due to hyperactivity. Error Type 1538 in the error log indicates hyperactivity. The hyperactive circuit pack is out of service and one or more of the following symptoms may be exhibited. 1. The UDS1-BD tests (such as Test #138 and Test #139) are aborting with error code 2000. 2. The tests run on the ports of this circuit pack are returning a no board result. 3. A **busyout** or a **release** has no affect on the test results. 4. A **list config** command shows that the circuit pack and the ports are properly installed. When hyperactivity occurs, the circuit pack is isolated from the system, and all of the trunks for this circuit pack are placed into the out of service state. The system will try to restore the circuit pack within 15 minutes. When no faults are detected for 15 minutes, the UDS1 interface circuit pack is restored to normal operation. All of the trunks for the UDS1 interface circuit pack are then returned to the in service state. Hyperactivity is often caused by the associated facility. In such a case, faults (such as slips, misframes, or blue alarms) would be entered in the error log. In addition, many hardware errors would be logged against the associated trunk circuits. If the facility is OK and the error occurs again after 15 minutes, replace the circuit pack.
2012	ABORT	Internal system error. 1. Retry the command at 1-minute intervals for a maximum of 5 times.

Continued on next page

Table 10-691. TEST #1420 Echo Canceller Test — *Continued*

Error Code	Test Result	Description/Recommendation
2100	ABORT	Could not allocate the necessary system resources to run this test. 1. Retry the command at 1-minute intervals for a maximum of 5 times.
2500	ABORT	Internal system error. 1. Retry the command at 1-minute intervals for a maximum of 5 times.

Continued on next page

Table 10-691. TEST #1420 Echo Canceller Test — *Continued*

Error Code	Test Result	Description/Recommendation
1400, 1401	FAIL	The Echo Cancellation Test has failed: ■ Error 1400 - Echo canceller function failed. The Echo Canceller Function Test, which is executed by firmware, failed. ■ Error 1401 - Echo canceller memory failed. The Echo Canceller Memory Test, which is executed by firmware, failed. Echo Cancellation is no longer being supplied by the board. Clear the alarm using the following commands: **busyout board UUCSS**, **test board UUCSS long**, **release board UUCSS**. If the test still fails, replace the circuit pack. **NOTE:** When this test fails, echo cancellation will be bypassed on all channels on the board. The circuit pack can still be used for a T1/E1 line interface without echo cancellation. This capability provides limited service for the customer until the circuit pack can be changed out.
	PASS	The Echo Cancellation feature is functioning properly.
0	NO BOARD	The test could not relate the internal ID to the port (no board). This could be due to incorrect translations, no board is inserted, an incorrect board is inserted, or an insane board is inserted. 1. Ensure that the board translations are correct. Execute the **add ds1 UUCSS** command to administer the UDS1 interface if it is not already administered. 2. If the board was already administered correctly, check the error log to determine whether the board is hyperactive. If this is the case, the board is shut down. Reseating the board will re-initialize the board. 3. If the board was found to be correctly inserted in step 1, then issue the **busyout board** command. 4. Issue the **reset board** command. 5. Issue the **release busy board** command. 6. Issue the **test board long** command. This should re-establish the linkage between the internal ID and the port.

VAL-BD (Voice Announcements over LAN Circuit Pack)

MO Name (in Alarm Log)	Alarm Level	Initial Command to Run[1]	Full Name of MO
VAL-BD	MINOR	**test board UUCSS long**	Voice Announcements over the LAN Circuit Pack
VAL-BD	WARNING	**test board UUCSS short**	Voice Announcements over the LAN Circuit Pack

1 UU is the universal cabinet number (1 for PPN, 2 - 3 for EPNs). C is the carrier designation (A, B, C, D, or E). SS is the number of the slot in which the circuit pack resides (01 to 21).

Voice Announcements over the LAN Circuit Pack

The Voice Announcements over the LAN (VAL) board (TN2501AP) provides per-pack announcement storage time of up to one hour, up to 31 playback ports, and allows for announcement file portability over a LAN. The VAL circuit pack also allows for LAN backup and restore of announcement files and the use of user-provided (.WAV) files. The circuit pack also provides the ability to download new versions of the firmware to itself.

VAL congestion controls

The switch activates congestion controls on VAL when it detects buffers exceeding the threshold. The switch releases the congestion controls when the VAL reports that its buffer level has returned to normal levels.

If congestion:	Then the switch:
Persists for a 14-minute interval,	Raises MINOR alarm.
Exhausts buffers,	Raises MINOR alarm.
Ceases for 12 minutes,	Retires MINOR alarm.

Error Log Entries and Test to Clear Values

Table 10-692. VAL-BD Error Log Entries

Error Type	Aux Data	Associated Test	Alarm Level	On/Off Board	Test to Clear Value
1(a)	0	Sanity	MINOR	ON	
18 (b)	0		WARNING	OFF	release board UUCSS
217 (c)	0	None	WARNING	ON	
257	65535	Control Channel Loop Test (#52)	MINOR	ON	test board UUCSS l r 20
257 (d)					
513 (e)	4352-4357		MINOR	ON	
769 (f)	4358				
1281, 1290 to 1295 (g)	Any		MINOR	ON	reset board UUCSS
1537, 1796(h)	Any		MINOR	ON	
1794(i)			MINOR	ON	
1798 (j)					
2049 (k)		Packet Interface Test (#598)	MINOR	ON	test board UUCSS l r 3
2305 2306 (l)					
2561 to 2668 (m)	Any				
2817 2819 (n)		Congestion Query Test (#600)	MINOR	ON	test board UUCSS s r 3
3073 (o)		Link Status Test (#601)	MINOR	ON	test board UUCSS s
3330 (p)			MINOR	ON	reset board UUCSS
3586 (q)					
3999 (q)	Any	None			
3840 (r)	4096-4102				
3841, 3843 (s)					
3842 (t)		Receive FIFO Overflow Error Counter Test (#596)			
3844 (u)	Any				

Continued on next page

Table 10-692. VAL-BD Error Log Entries

Error Type	Aux Data	Associated Test	Alarm Level	On/Off Board	Test to Clear Value
3845 (v)	Any				
3846 (w)	Any				
3848 (x)	Any				
3851 (y)	Any				
3852 (z)	Any				
3853 (aa)	Any				
3854 (ab)	Any				
3855 (ac)	Any				
3856 (ad)	Any				

Notes:

a. **Error Type 1**: Circuit pack stopped functioning or is not physically present.

   1. Verify that the circuit pack is present.
   2. If circuit pack is present, reset the circuit pack (**reset board UUCSS**).
   3. If the error persists, replace the circuit pack.

b. **Error Type 18**: The VAL circuit pack is busied out.

c. **Error Type 217**: applies to 10 circuit packs:

   1. Remove the circuit pack(s) against which the error is logged.

d. **Error Type 257**: Transient communication problem between switch and circuit pack; does not affect service and can be ignored.

   1. Ignore this error, unless the Control Channel Loop Test (#52) fails.
   2. If Test #52 fails, replace the circuit pack.

   Repetitive failures of the Control Channel Loop Test indicate circuit pack hardware failure.

e. **Error Type 513**: Circuit pack detected and reported hardware failure.

   1. Reset the circuit pack (**reset board UUCSS**).

      Aux Data:

4352	External RAM error
4353	Internal RAM error

4355	ROM Checksum error
4356	Angel Message Corruption error
4357	Instruction set error

f. **Error Type 769**: Logic error. By itself this error can be ignored, but it can result in other error types being reported.

g. **Error Type 1281,1290-1295**: Critical hardware or firmware error.

If the switch detects:	Then the switch:
1 error,	Resets circuit pack.
3 errors in 15 minutes,	Raises MINOR alarm.

Error Type descriptions are as follows:

1290	Global HDLC error
1291	Main RAM/ROM error
1292	CPU error
1293	Insane onboard processor
1294	Onboard translation RAM error
1295	(Aux 3) RSCL link down
	(Aux 0) RSCL keep alive failure

1. Attempt to clear the alarm (**reset board UUCSS**).
2. If alarm persists, replace circuit pack.

h. **Error Type 1537, 1796**: A hyperactive VAL circuit pack that has exceeded the error threshold has been removed from service.

1. Attempt to clear the alarm (**reset board UUCSS**).
2. If the error recurs within 15 minutes, replace the circuit pack.

i. **Error Type 1794**: Packet bus transmit buffers have overflowed.

1. Attempt to clear the alarm (**reset board UUCSS**).
2. If the error recurs within 15 minutes, replace the circuit pack.

j. **Error Type 1798**: Unable to write translation RAM.

1. Attempt to clear alarm (**reset board UUCSS**).
2. If alarm recurs within 15 minutes, replace the circuit pack.

k. **Error Type 2049**: Packet Interface Test (#598) failed.

1. Attempt to clear the alarm (**test board UUCSS l r 3**).
2. If alarm does not clear, reset the circuit pack (**reset board UUCSS**).

3. If circuit pack resets, execute Packet Interface Test (#598) several times.
4. If Packet Interface Test (#598) continues to fail, replace the circuit pack.

l. **Error Type 2305-2306**: Error in received frame from packet bus.

Error Type:	Description
2305	Received invalid LAPD frame.
2306	Detected parity error on received frame.

Most likely cause—packet bus problem.
Other cause—circuit pack fault.

Invalid LAPD frame errors occur when the frame

- contains a bad Cyclic Redundancy Check (CRC)
- is greater than the maximum length
- violates the link level protocol

1. Retry the command (**test board UUCSS**) and see if the condition clears.
2. If condition persists, execute PPE/LANBIC Receive Parity Error Counter Test (# 597) and determine if the condition clears.
3. If condition persists, execute Packet Interface Test (# 598) to verify circuit pack integrity.
4. If Packet Interface Test (# 598) fails, consult repair procedure for the packet bus.

m. **Error Type 2561-2668:** System software received an indication that the socket was closed due to an error. Errors are reported as log only. Errors logged here are for the sockets that had *no* processor channels associated with them, for example, sockets to read SNMP data. The counter base is offset by the application type of the application associated with this socket that is down. The Aux Data field of the log entry contains this application's number, for example, a SNMP application would have its application number in the Aux Data field.

NOTE:
2561 - 2668 is a range of reserved numbers for future applications. 2570 currently represents an SNMP socket failure.

n. **Error Type 2817-2819**: Congestion Query Test (#600) failed.

The Error Types correspond to the descriptions:

2817	All buffers exhausted.
2819	Utilized buffers exceed threshold.

If:	Then:
Active buffers exceed threshold,	VAL enters congested state.

1. Refer to Congestion Query Test (# 600) for Abort and Fail 3601s.

o. **Error Type 3073**: Remote Socket Control Link (RSCL) or Link Status Test (#601) failed. This failure can be due to:

- This circuit pack
- The packet bus
- The packet interface circuit pack.

If:	Then:
RSCL disconnects at link level	Link fails
Link cannot be reconnected quickly	Switch raises MINOR alarm

p. **Error Type 3330**: Critical failure in Packet Bus interface.

Below, Error Types correspond to descriptions.

If the switch detects:	Then it:
1 error,	Resets circuit pack.
2 errors in 15 minutes,	Raises MINOR alarm.

1. Attempt to clear the alarm (**reset board UUCSS**).
2. If alarm persists, replace circuit pack.

q. **Error Type 3586 and 3999**: Switch removed hyperactive circuit pack that reported threshold number of errors. One or more of the following symptoms can be present:

- Circuit pack port tests return NO BOARD.
- List configuration command shows circuit pack and ports are installed properly

If Error Type 3999:	And traffic volume is:	Then:
Does not accompany Error Type 3586,	Heavy	Circuit pack is in service, but sent at least half hyperactive threshold. With heavy traffic, this is normal.
Does not accompany Error Type 3586,	Light	Circuit pack is in service, but sent at least half hyperactive threshold. With light traffic, this error indicates a problem with the circuit pack, its links, or the equipment attached to the links.
Accompanies Error Type 3586,	Either Light or Heavy	Switch removed hyperactive circuit pack.

1. Busyout (**busyout board UUCSS**) and release (**release board UUCSS**) the circuit pack.
2. Allow 30 minutes for condition to clear itself.
3. To re-establish circuit pack into service manually, busyout (**busyout board UUCSS**), reset (**reset board UUCSS**), and release (**release board UUCSS**) the circuit pack.
4. If error recurs within 15 minutes, replace the circuit pack.
5. If the same error occurs on a different circuit pack, follow normal escalation procedures.

r. **Error Type 3840**: Circuit pack received bad control channel message from switch.

Aux Data:

4096	Bad major heading
4097	Bad port number
4098	Bad data
4099	Bad sub-qualifier
4100	State inconsistency
4101	Bad logical link
4102	Bad application identifier

s. **Error Type 3841, 3843**: errors do not affect service.

Below, Error Types correspond to descriptions.

3841	Internal firmware error.
3843	Bad translation RAM. Call uses another translation location.

These errors do not affect service, however, they can cause reports of other errors that do affect service.

If Error Type 3843 begins to affect service, it escalates to Error Type 1294 (See Note g).

t. **Error Type 3842**: Packet interface receive buffers overflowed.

If this error occurs frequently, the overflow can be congesting the circuit pack.

1. Refer to Receive FIFO Overflow Error Counter Test (#596).

u. **Error Type 3844**: LAPD frame contains LAPD Protocol Error.

By themselves, these errors do not affect service.

v. **Error Type 3845**: Angel interprocessor error.

By themselves, these errors do not affect service.

w. **Error Type 3846**: Main interprocessor error.

By themselves, these errors do not affect service.

x. **Error Type 3848**: Main internal channel error.

By themselves, these errors do not affect service.

y. **Error Type 3851**: Unable to write LAN translation RAM error.

By themselves, these errors do not affect service.

z. **Error Type 3852:** LAN external RAM error.

By themselves, these errors do not affect service.

aa. **Error Type 3853**: Interprocessor LAPD frame error.

By themselves, these errors do not affect service.

ab. **Error Type 3854**: Interprocessor LAPD protocol error.

By themselves, these errors do not affect service.

ac. **Error Type 3855**: Memory allocation error.

By themselves, these errors do not affect service.

ad. **Error Type 3856**: High CPU occupancy error.

By themselves, these errors do not affect service.

System Technician-Demanded Tests: Descriptions and Error Codes

Investigate errors in the order they appear in the table below.

Order of Investigation	Short Test Sequence	Long Test Sequence	D/ ND[1]
Control Channel Loop-Around Test #52	X	X	ND
Circuit Pack Restart Test #594			D
Invalid LAPD Frame Error Counter Test #597		X	ND
PPE/LANBIC Receive Parity Error Counter Test #595		X	ND
Receive FIFO Overflow Error Counter Test #596		X	ND
Packet Interface Test #598	X	X	ND
Congestion Query Test #600	X	X	ND
Link Status Test #601	X	X	ND

1 D = Destructive; ND = Nondestructive

Control Channel Loop-Around Test (#52)

This non-destructive test fails if the circuit pack does not return to a sane state after being reset. This test queries the circuit pack for its code and vintage, and verifies its records.

Table 10-693. TEST #52 Control Channel Loop-Around Test

Error Code	Test Result	Description/Recommendation
None 2100	ABORT	Could not allocate the necessary system resources to run test. Retry the command at 1-minute intervals, up to 5 times. If the problem persists, escalate the problem.
	FAIL	The circuit pack failed to return the code or vintage. Retry command at 1-minute intervals, up to 5 times. Reset the board (**reset board UUCSS**). If reset aborts with error code 1115, busyout (**busyout board UUCSS**), reset (**reset board UUCSS**), and release board (**release board UUCSS**). If test continues to fail, replace the circuit pack. Escalate the problem if failures continue.
	PASS	Test successful.

Circuit Pack Restart Test (#594)

NOTE:
This test is destructive.

Execute this test (not part of either short or long demand test sequence) to reset the circuit pack only if there are PPCPU errors. This test fails if the circuit pack does not return to a sane state after being reset. The circuit pack resets through the SAKI Sanity Test (#53).

Table 10-694. Test #594 Circuit Pack Restart Test

Error Code	Test Result	Description/Recommendation
None	ABORT	Could not allocate the necessary system resources to run test. Retry the command at 1-minute intervals, up to 5 times. If the problem persists, escalate the problem.
1015	ABORT	Port is not out-of-service. Busyout the circuit pack (**busyout board UUCSS**). Retry the command at 1-minute intervals, up to 5 times. If the problem persists, escalate the problem.
1966	ABORT	The board is in the process of running the autosave command to save announcements. Retry the command again later.
2100	ABORT	Could not allocate the necessary system resources to run test. Retry the command at 1-minute intervals, up to 5 times. If the problem persists, escalate the problem.
1, 2	FAIL	The circuit pack failed to reset. Retry command at 1-minute intervals, up to 5 times. If the problem persists, pull out and reseat the circuit pack. If the problem persists, replace the circuit pack.
	PASS	The circuit pack initialized correctly.

PPE/LANBIC Receive Parity Error Counter Test (#595)

This test is non-destructive. When the VAL circuit pack detects a parity error with a received frame, it increments the PPE/LANBIC Receive Parity error counter. This test reads and clears the counter, and can verify repair of the problem.

Errors can indicate a problem with:

- This circuit pack
- A packet bus
- Another circuit pack on the bus

Table 10-695. TEST #595 PPE/LANBIC Receive Parity Error Counter Test

Error Code	Test Result	Description/Recommendation
2000	ABORT	Did not receive circuit pack test response within the allowable time period. Retry command at 1-minute intervals, up to 5 times. If the problem persists, reset the circuit pack (**reset board UUCSS**). If the problem persists, replace the circuit pack.
2100	ABORT	Could not allocate the necessary system resources to run test.
2500	ABORT	Internal system error. Retry the command at 1-minute intervals, up to 5 times. If the problem persists, escalate the problem.
1-10	FAIL	Circuit pack detects parity errors. The Error Code indicates the value of the on-board error counter. Retry the command at 1-minute intervals, up to 5 times. If the test continues to fail, execute the Packet Interface Test (#598) (**test board UUCSS**). If Packet Interface Test (#598) fails, see repair procedures for Test (#598).
	PASS	Circuit pack detects no errors.

Receive FIFO Overflow Error Counter Test (#596)

This test is non-destructive. When the VAL circuit pack detects packet bus buffer overflow, it increments the error on the FIFO Overflow error counter. This test reads and clears the counter.

If errors are:	Then they can be due to:
Occasional	Statistical buffer sizing

Table 10-696. TEST #596 Receive FIFO Overflow Error Counter Test

Error Code	Test Result	Description/Recommendation
2000	ABORT	Did not receive circuit pack test response within the allowable time period. Retry command at 1-minute intervals, up to 5 times. If the problem persists, reset the circuit pack (**reset board UUCSS**). If the problem persists, replace the circuit pack.
2100	ABORT	Could not allocate the necessary system resources to run test.
2500	ABORT	Internal system error. Retry the command at 1-minute intervals, up to 5 times. If the problem persists, escalate the problem.
1-10	FAIL	Circuit pack detects overflow errors. The error code indicates the value of the on-board error counter. Retry the command at 1-minute intervals, up to 5 times. If the test continues to fail, execute the Packet Interface Test (#598) (**test board UUCSS**). If Packet Interface Test (#598) fails, see repair procedures for Test (#598).
	PASS	Circuit pack detects no errors.

Invalid LAPD Frame Error Counter Test (#597)

This test is non-destructive.

The VAL circuit pack detects invalid frames when it receives

- a frame with a CRC error
- an unrecognizable frame
- a recognizable frame in an unexpected state

When the VAL circuit pack detects an invalid LAPD frame, it increments the Invalid LAPD Frame error counter. This test reads and clears the counter, and verifies the repair of the problem.

Errors can indicate a

- circuit pack problem
- packet bus problem
- problem with another circuit pack on the bus

Table 10-697. TEST #597 Invalid LAPD Frame Error Counter Test

Error Code	Test Result	Description/Recommendation
2000	ABORT	Did not receive circuit pack test response within the allowable time period. Retry command at 1-minute intervals, up to 5 times. If the problem persists, reset the circuit pack (**reset board UUCSS**). If the problem persists, replace the circuit pack.
2100	ABORT	Could not allocate the necessary system resources to run this test.
2500	ABORT	Internal system error. Retry the command at 1-minute intervals, up to 5 times. If the problem persists, escalate the problem.

Continued on next page

Table 10-697. TEST #597 Invalid LAPD Frame Error Counter Test — *Continued*

Error Code	Test Result	Description/Recommendation
1-10	FAIL	The circuit pack detects LAPD frame errors. The error code indicates the value of the on-board error counter. Retry the command at 1-minute intervals, up to 5 times. If the test continues to fail, execute the Packet Interface Test (#598) (**test board UUCSS long**). If Packet Interface Test (#598) fails, see repair procedures for Test (#598).
	PASS	Circuit pack detects no errors.

Packet Interface Test (#598)

This non-destructive test checks the packet bus interface circuitry on the VAL circuit pack. Test failure indicates faulty circuit pack.

Table 10-698. TEST #598 Packet Interface Test

Error Code	Test Result	Description/Recommendation
2000	ABORT	Did not receive circuit pack test response within the allowable time period. Retry command at 1-minute intervals, up to 5 times. If the problem persists, reset the circuit pack (**reset board UUCSS**). If the problem persists, replace the circuit pack.
2012	ABORT	Could not allocate the necessary system resources to run test.
2100	ABORT	Internal system error. Retry the command at 1-minute intervals, up to 5 times. If the problem persists, escalate the problem.

Continued on next page

Table 10-698. TEST #598 Packet Interface Test — *Continued*

Error Code	Test Result	Description/Recommendation
	FAIL	Circuit pack has detected a failure of the Packet Interface Test (#598). Retry command at 1-minute intervals, up to 5 times. If the problem persists, reset the circuit pack (**reset board UUCSS**). If the test continues to fail, replace the circuit pack.
	PASS	The Packet Interface Test (#598) passed.

Congestion Query Test (#600)

This non-destructive test queries the number of used buffers to determine if the VAL circuit pack is congested.

If:	Then:
Used buffers are, or are nearly, exhausted,	The test fails.
The test fails,	The switch alarms, and announcements can fail.

Normal call handling resumes when the VAL circuit pack has recovered from congestion.

Table 10-699. TEST #600 Congestion Query Test

Error Code	Test Result	Description/Recommendation
2000	ABORT	Did not receive circuit pack test response within the allowable time period. Retry command at 1-minute intervals, up to 5 times. If the problem persists, reset the circuit pack (**reset board UUCSS**). If the problem persists, replace the circuit pack.

Continued on next page

Table 10-699. TEST #600 Congestion Query Test — *Continued*

Error Code	Test Result	Description/Recommendation
2012	ABORT	Could not allocate the necessary system resources to run test.
2100	ABORT	Internal system error. Retry the command at 1-minute intervals, up to 5 times. If the problem persists, escalate the problem.
1	FAIL	The buffer level is nearly exhausted.
2	FAIL	The VAL is congested, and no buffers are available. Retry command at 1-minute intervals, up to 5 times. If command continues to fail, examine the VAL port measurements to determine which ports are heavily utilized and the processor occupancy of the circuit pack. *A Low processor occupancy* when VAL is congested indicates circuit pack failure. If the problem persists, reset the circuit pack (**reset board UUCSS**). If congestion recurs, replace the circuit pack. *High processor occupancy* indicates the VAL is congested due to traffic load. To relieve congestion in the short term, selectively busyout ports (**busyout port UUCSSpp**) on the VAL circuit pack. To achieve a more permanent resolution, it could be necessary reassign announcements to other integrated announcement circuit packs. Consider replacing affected VAL ports with new ports.
3	FAIL	The VAL circuit pack is not operating normally and is congested.
	PASS	Hardware setting and attached cable type match VAL circuit pack administration. The circuit pack detects no errors.

Link Status Test (#601)

This non-destructive test determines the state of the call control signaling link for VALs. If the signaling link is physically connected, the test sends a test frame over the link and checks for a response. The test passes only if both the signaling link is connected and the test frame is successfully transmitted.

A failure can indicate a problem with:

- this circuit pack.
- the packet bus.
- the packet interface circuit pack.

Table 10-700. TEST #601 Link Status Test

Error Code	Test Result	Description/Recommendation
1125	ABORT	RSCL link or VAL board not in service. Release the board. Repeat the test. Escalate if the problem persists.
2012	ABORT	Could not allocate the necessary system resources to run this test.
2100	ABORT	Internal system error. Retry command at 1-minute intervals, up to 5 times. If the problem persists, escalate the problem.

Table 10-700. TEST #601 Link Status Test — *Continued*

Error Code	Test Result	Description/Recommendation
2	FAIL	The RSCL control link disconnected. Retry command at 1-minute intervals, up to 5 times. If the test continues to fail, execute the Packet Interface Test (#598) (**test board UUCSS**) to see if the problem is in the circuit pack. If the Packet Interface Test (#598) fails, refer to Packet Interface Test repair procedures. If the Packet Interface Test (#598) passes, refer to Packet Control Circuit Pack and Packet Bus repair procedures.
3	FAIL	Received no response to RSCL control link test frame. Retry command at 1-minute intervals, up to 5 times. If the problem persists, reset the circuit pack (**reset board UUCSS**). If test continues to fail, replace the circuit pack.
	PASS	RSCL control link connected.

Configurations

The following figure shows the configuration options for the TN2501AP (VAL) circuit pack within a system.

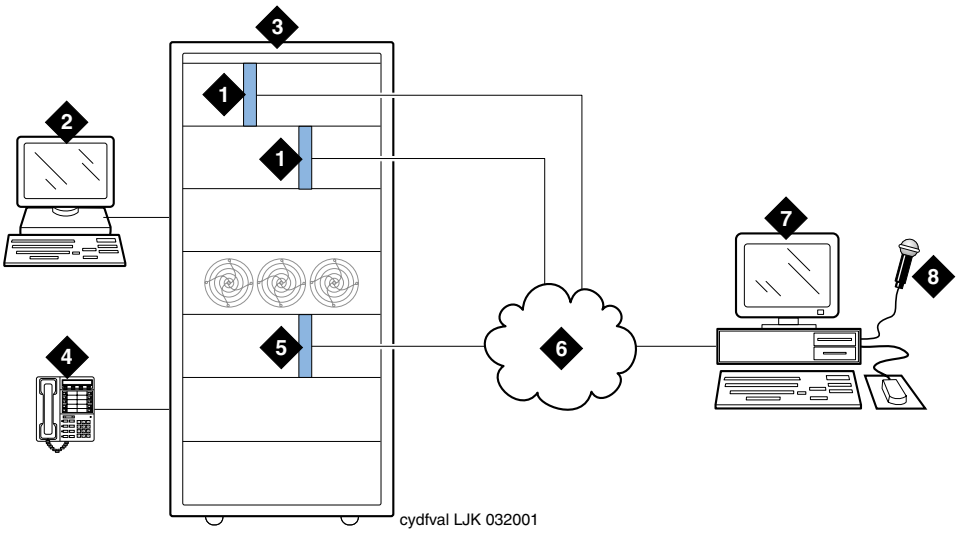

Figure Notes

1. TN2501AP VAL announcement circuit pack
2. System access terminal (SAT)
3. Switch
4. Phone for recording announcements
5. TN799C (C-LAN) is required when using IP SAT or VAL Manager.
6. Your LAN (See LAN cable)
7. computer or remote recording studio for
   - recording and storing announcements
   - FTP client application
   - VAL Manager application (PC only)
8. Microphone

Figure 10-104. VAL configuration options

Hardware specifications

The following table shows the required VAL hardware..

Part	Number	Comcode
TN2501AP	1	108772583
Backplane Adapter (Label reads IP Media Processor)	1	848525887

Faceplate LEDs

The following figure shows the 9 LEDs on the TN2051AP faceplate. Descriptions of each LED are in Table 10-701.

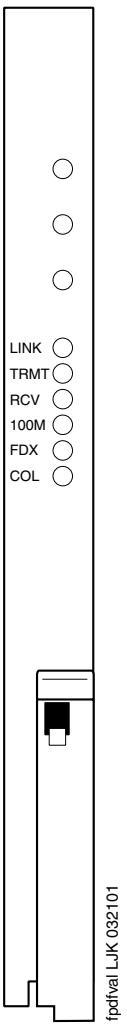

Figure 10-105. TN2501AP faceplate LEDs

The following table lists the TN2501AP faceplate LEDs, the type of behavior (on, off, flashing, or intermittent), and a description of the condition.

Table 10-701. TN2501AP LEDs

LED	Behavior	Description
Red	On solid	Circuit pack failure or a major or minor on-board alarm
Green	On solid	Firmware is self-downloading to the circuit pack or testing in progress.
Amber	On solid	Firmware is self-downloading to the circuit pack. **CAUTION:** *You can lose the resident firmware image file if you reset the circuit pack during firmware download. If this happens, FTP a new firmware image file to the VAL circuit pack and perform the Firmware download procedure again.*
Amber	Fast flash (100ms on/ 100ms off)	Occurs during circuit pack insertion or circuit pack reset which the announcement files are being copied from FLASH to RAM. If you reset the circuit pack during this time, your announcement files remain intact.
Amber	Slow flash (200ms on/ 200ms off)	Flashes during autosave while copying announcement files from RAM to FLASH. **CAUTION:** *You can lose the announcements on the circuit pack if you reset it during an autosave.*
LINK	On/off	Active ethernet link
TRMT	Intermittent	Transmit
RCV	Intermittent	Receive
100M	On/off	Off = 10MB ethernet connection
		On = 100MB ethernet connection
FDX	On/off	Off = half-duplex connection
		On = full duplex connection
COL	On/off	Off = no collision detected
		On = collisions detected

Other hardware

To establish LAN connections the TN2501AP circuit pack requires a

- Backplane Adapter that attaches to the Amphenol connector on the back of the cabinet, corresponding to the TN2501AP integrated announcement circuit pack slot.
- LAN cable that attaches to the Backplane Adapter.

Backplane Adapter

The following figure shows the Backplane Adapter (label reads IP Media Processor).

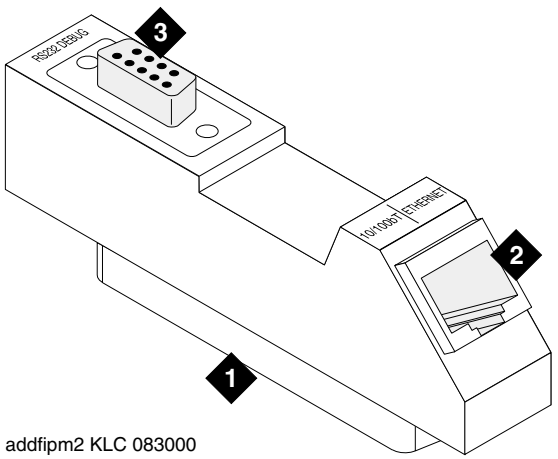

Figure Notes

1. Amphenol connector attaches to the back of the switch cabinet, corresponding to the TN2501AP circuit pack slot.
2. RJ-45 LAN cable connection
   - 10 Mbps uses Category 3 cable.
   - 100 Mbps uses Category 5 cable.
3. This connector is not used for VAL.

Figure 10-106. Backplane Adapter (Comcode 848525887)

LAN cable

The TN2501AP circuit pack does not include cables to connect the circuit pack to your LAN. The following table lists the cable category and connection port.

Ethernet connection speed	Cable	Connection description
10 Mbps	Category 3	Connects through the RJ45 jack (note #2 in Figure 10-106),
100 Mbps	Category 5	Connects through the RJ45 jack (note #2 in Figure 10-106),

Maintenance Commands

The following table lists several VAL-related maintenance commands and how to use the command for troubleshooting.

Table 10-702. VAL maintenance commands

Command	Use this command to
test board	Test both circuit pack- and port-level maintenance.
test port	Test any of the ports on the VAL circuit pack
test mo	Test either of the 2 maintenance objects on the VAL circuit pack
busyout board	Curtail activity on the circuit pack before resetting it (reset board).
release board	Resume activity on the circuit pack after busying out the VAL circuit pack or ports on it (busyout board or busyout port).
busyout port	Isolate a specific port usually during troubleshooting.
release port	Resume activity after busying out a port on the VAL circuit pack (busyout port).
reset board	Re-initialize the circuit pack in the system and upload announcement file information.
reset val	Reset the circuit pack if it is in the insane state and to override querying the board to determine if an announcement autosave is in process.
status data-module	Obtain general information about the data-module connection to port 33 on the VAL circuit pack
status firmware download	Obtain information about a demand or scheduled firmware download.
list sys-link	Generate a list of administered links and the general status of each.
status sys-link	Generate a detailed status report for a specific administered system link.
status link	Generate a status report about a specific administered ethernet link. (For VAL this means the administered ethernet link.)

Continued on next page

Table 10-702. VAL maintenance commands — *Continued*

Command	Use this command to
status val-ip	Generate an IP-related, MIB data status report.
netstat ip-route	Generate a report showing the status of the VAL IP routes on the VAL circuit pack.
list directory board	See the file contents of a VAL circuit pack by location.
remove file	Delete an announcement or firmware image file on a VAL circuit pack.
enable filesystem	Begin an FTP session into a specific TN2501AP circuit pack.
disable filesystem	End an FTP session into a specific TN2501AP circuit pack.
set ethernet-options	Manually or automatically set the ethernet connection parameters.
get ethernet options	Generate a report about a specific ethernet connection.
set boot-image	Direct the system to use 1 of 2 possible firmware image files on the TN2501AP circuit pack.
get boot-image	View the two firmware image parameters on the VAL circuit pack.

VAL-PT (Voice Announcements over LAN Packet/Port)

MO Name (in Alarm Log)	Alarm Level	Initial Command to Run[1]	Full Name of MO
VAL-PT	MAJOR	**test port UUCSSpp long**	VAL Port Maintenance
VAL-PT	MINOR	**test port UUCSSpp long**	VAL Port Maintenance
VAL-PT	WARNING	**test port UUCSSpp**	VAL Port Maintenance

1 *UU* is the universal cabinet number (1 for PPN, 2 - 3 for EPNs). *C* is the carrier designation (A, B, C, D, or E). *SS* is the number of the slot in which the circuit pack resides (01 to 21). *pp* is the two digit port number (01, 02, ...).

A remote socket control link (RSCL) links the VAL and the SPE to pass call control and other management information. Since one link serves all the ports on the circuit pack, maintenance of the RSCL is part of the VAL circuit pack maintenance.

VAL Congestion Controls

The switch activates congestion controls on VAL when it detects buffers exceeding the threshold. The switch releases the congestion controls when the VAL reports that its buffer level has returned to normal levels.

If congestion:	Then the switch:
Persists for a 14-minute interval	Raises MINOR alarm
Exhausts buffers	Raises MINOR alarm
Ceases for 12 minutes	Retires MINOR alarm

Error Log Entries and Test to Clear Value

Table 10-703. VAL-PT Error Log Entries

Error Type	Aux Data	Associated Test	Alarm Level	On/Off Board	Test to Clear Value
0[1]	0	Any	Any	Any	**test port UUCSSpp l**
1 (a)	0	SCOTCH Sync Looparound Test (#1275)	MINOR	ON	**test port UUCSSpp l r 3**
257 (b)	0		WARNING	OFF	
3585 (c)	0-1	TDM Looparound Test (#1285)	MAJOR	ON	**test port UUCSSpp l r 3**

1 There is no short test sequence for this MO. All tests are available in the Long Test Sequence. Refer to the appropriate test description and follow the recommended procedures.

Notes:

a. **Error Type 001**: SCOTCH Synchronous Looparound Test (#1275) failed.

   1. Test the port (**test port UUCSSpp long**).
   2. Refer to SCOTCH Synchronous Looparound Test (#1275) repair procedures.

b. **Error Type 257**: VAL port detected overrun or underrun condition that can indicate a hardware problem.

   1. Test for hardware problem (**test port UUCSSpp long**).
   2. Refer to SCOTCH Synchronous Looparound Test (#1275) repair procedures to verify repair.
   3. Clear the alarm (**test port UUCSSpp long clear**).

c. **Error Type 3585**: TDM Port Looparound Test (#1285) failed.

   1. Test the port (**test port UUCsspp long**).
   2. Refer to TDM Looparound Test (#1285) repair procedure.

System Technician-Demanded Tests: Descriptions and Error Codes

Investigate errors in the order they appear in the table below.

Table 10-704. System Technician-Demanded Tests: VAL-PT

Order of Investigation	Short Test Sequence	Long Test Sequence	D/ND[1]
TDM Looparound Test (#1285)		X	D
SCOTCH Synchronous Looparound Test (#1275)		X	D

1 D = Destructive, ND = Non-destructive

TDM Test (#1285)

This test is destructive.

This test verifies whether the VAL port can send and receive data on the TDM bus. This test has a tone generator send tones on a timeslot, and it has a tone receiver receive tones on another timeslot. The tones are looped through the record/playback port.

If the received tones:	Then:
Match the tones sent	The test passes.
Do not match the tones sent	The test fails.

Test failure indicates failure of one or more of the following components:

- VAL (TN2501) circuit pack
- TDM Bus
- Tone generator / tone receiver circuit pack

Table 10-705. TEST #1285 TDM Looparound Test

Error Code	Test Result	Description/Recommendation
1000	ABORT	The port is in use. Retry the command when the port is idle. You can force the port to the idle state with the **busyout port UUCSS** command. Escalate if the problem persists. This command is destructive, tearing down all calls and links using the port.
1002	ABORT	No TDM bus timeslots available for the test. Retry the command at 1-minute intervals, up to 5 times. Escalate if the problem persists.
1003	ABORT	No more tone receivers idle for use in this test. Retry the command at 1-minute intervals, up to 5 times. Escalate if the problem persists.
2000	ABORT	Did not receive circuit pack test response within the allowable time period. If this problem persists, reset the circuit pack (**busyout board UUCSS**, **reset board UUCSS**, and **release board UUCSS**). Repeat the test. If the problem persists, replace the circuit pack.
2012	ABORT	Internal system error. Retry the command at 1-minute intervals, up to 3 times. Escalate if the problem persists.
2100	ABORT	Could not allocate the necessary system resources to run test. Retry the command at 1-minute intervals, up to 5 times. Escalate if the problem persists.
	FAIL	Received tones do not match transmitted tones. Retry command at 1-minute intervals, up to 3 times. If the problem persists, refer to TDM-BUS, Tone Generator, and Tone Receiver repair procedures. If the problem persists, reset the board (**busyout board UUCSS**, **reset board UUCSS**, and **release board UUCSS**). Repeat the test. If the problem persists, replace the circuit pack.
	PASS	Port connections across the TDM bus function properly.

SCOTCH Synchronous Looparound Test (#1275)

This test is destructive.

This test verifies the circuit in the data path of a VAL announcement port call. This test fails if the data transmitted on the port does not match the data received in the looparound mode. Failure of this test indicates a port hardware fault on the circuit pack.

This test aborts if calls are using the port, or if the VAL link associated with the port is connected. To avoid this, at the SAT type **busyout port UUCSSpp**, which tears down all calls and links using the port.

Table 10-706. TEST #1275 SCOTCH Synchronous Looparound Test

Error Code	Test Result	Description/Recommendation
1000	ABORT	The port is in use. Retry the command when the port is idle. You can force the port to the idle state with the **busyout port UUCSS** command. This command is destructive, tearing down all calls and links using the port.
1002	ABORT	No TDM bus timeslots available for the test. Retry the command at 1-minute intervals, up to 5 times. Escalate if the problem persists.
1963	ABORT	The port is in use. Retry the command when the port is idle. You can force the port to the idle state with the **busyout port UUCSS** command. This command is destructive, tearing down all calls and links using the port.
2000	ABORT	Did not receive circuit pack test response within the allowable time period. If this problem persists, reset the circuit pack (**busyout board UUCSS**, **reset board UUCSS**, and **release board UUCSS**). If the problem persists, replace the circuit pack.
2012	ABORT	Internal system error. Retry the command at 1-minute intervals, up to 3 times. Escalate if the problem persists.

Continued on next page

Table 10-706. TEST #1275 SCOTCH Synchronous Looparound Test — *Continued*

Error Code	Test Result	Description/Recommendation
2100	ABORT	Could not allocate the necessary system resources to run test. Retry the command at 1-minute intervals, up to 5 times. Escalate if the problem persists.
	FAIL	VAL circuit pack detected test failure. If the problem persists, reset the circuit pack (**busyout board UUCSS**, **reset board UUCSS**, and **release board UUCSS**). If the problem persists, replace the circuit pack.
	PASS	Port circuitry functioning properly.

VC-BD

MO Name (in Alarm Log)	Alarm Level	Initial Command to Run[1]	Full Name of MO
VC-BD	MAJOR	test board PCSS l r#	Voice Conditioner Circuit Pack
VC-BD	MINOR	test board PCSS l r#	Voice Conditioner Circuit Pack
VC-BD	WARNING[2]	test board PCSS s r#	Voice Conditioner Circuit Pack

1 Where P is the port network number (1 for PPN and 2 or 3 for EPN); C is the carrier designation (for example, A, B, C, or D); and SS is the address of the slot in the carrier where the circuit pack is located (for example, 01, 02, ...).

2 Refer to XXX-BD (Common Port Board) Maintenance documentation.

CAUTION:
If the TN788 Voice Conditioner Circuit Pack (VC-BD) is not Vintage 2 or later, it must be replaced.

The TN788 Voice Conditioner Circuit Pack (VC-BD) is a service circuit pack that provides conditioning for the audio signals from multimedia equipment based on the CCITT H.221 standard. The TN788 transcodes, gain adjusts, and bridges the audio bit streams demultiplexed by the TN787 (MMI) circuit pack and transmits encoded, exclusive audio conference sums onto the TDM bus so that the MMI can multiplex the audio, video, and data streams for the H.221 endpoints.

Error Log Entries and Test to Clear Values

Table 10-707. VC-BD Error Log Entries

Error Type	Aux Data	Associated Test	Alarm Level	On/Off Board	Test to Clear Value
0[1]	0	Any	Any	Any	test board PCSS sh r 1
1 (a)	Any	None	MIN	ON	
18 (b)	0	busyout board PCSS	WNG	OFF	release board PCSS
257 (c)	Any	Control Channel Loop Test (#52)	MIN	ON	test board PCSS r 20
513 (d)	4352 to 4357				
769 (e)	4358				
1025 (f)	4363	NPE Audit Test (#50)			
1281 (g)	Any	SAKI Sanity Test (#53)	MAJ	ON	

Continued on next page

Table 10-707. VC-BD Error Log Entries — *Continued*

Error Type	Aux Data	Associated Test	Alarm Level	On/Off Board	Test to Clear Value
1293 to 1294 (h)	46088 to 46096	SAKI Sanity Test (#53)	MIN	ON	See note (g)
1538 (i)	46082		MIN	ON	

1 Run the short test sequence first. If all tests pass, run the long test sequence. Refer to the appropriate test description and follow the recommended procedures.

Notes:

a. The circuit pack stopped functioning or it was removed from the system. This alarm is logged approximately 11 minutes after the circuit pack is removed and/or the SAKI Sanity Test (#53) fails.

   To resolve this error, insert a circuit pack in the same slot as the error indicates, if the circuit pack is not already in the system. Or, if the circuit pack is in the system and the red LED is on, then follow instructions for Red alarms.

   CAUTION:
   If the TN788 Voice Conditioner Circuit Pack (VC-BD) is not Vintage 2 or later, it must be replaced.

b. This circuit pack is busied out by the **busyout board PCSS** command.

c. Transient communication problems exist between the switch and this circuit pack. Execute the **test board PCSS** command and refer to the repair procedures for the Control Channel Loop Around Test (#52).

d. The circuit pack detected an on-board hardware failure. The reported aux data values correspond to the following detected errors:

Error	Description
4352	External RAM error
4353	Internal RAM error
4355	ROM Checksum error
4357	Instruction set error

Reset the circuit pack by executing the **busyout board PCSS, reset board PCSS**, and **release board PCSS** commands. When it is reset, the circuit pack executes a set of tests to detect the presence of any of the above faults. The detection of one these errors during initialization causes the circuit pack to lock-up and appear insane to the system. See the repair procedures in footnote (a) for error type 1.

e. The circuit pack detects a program logic error. While no action is required, this error may lead to errors of other types being reported against this circuit pack.

f. The circuit pack cannot update NPE memory and read it back. This error type can be ignored, but it may lead to other error types being reported against this circuit pack.

g. A critical hardware failure has been detected on the circuit pack. Use **busyout board PCSS**, **reset board PCSS**, followed by **release board PCSS**. If test #53 passes, the on-board circuitry is healthy. Use **test board PCSS long clear** to retire the alarm. If test #53 fails, replace the circuit pack.

h. The circuit pack detected a critical hardware failure. Reset the circuit pack by issuing the **busyout board PCSS**, **reset board PCSS**, and **release board PCSS** commands. If the Circuit Pack Restart Test (#594) passes, then the on-board circuitry is healthy. Retire the alarm by issuing the **test board PCSS long clear** command. If the Circuit Pack Restart Rest (#594) fails, replace the circuit pack.

The reported error types correspond to the following detected errors:

Error	Description
1293	On-board auxiliary processor insane
1294	Internal memory access error

i. The circuit pack is hyperactive — it is flooding the switch with messages sent over the control channel. The circuit pack is taken out of service when a threshold number of these errors is reported to the switch. Clear the alarm by using **busyout board PCSS**, **reset board PCSS**, **test board PCSS long clear**, and **release board PCSS**. If the error recurs within 10 minutes, then replace the circuit pack.

System Technician-Demanded Tests: Descriptions and Error Code

Order of Investigation	Short Test Sequence	Long Test Sequence	D/ND[1]
Control Channel Loop-Around Test (#52) (a)	X	X	ND

1 D = Destructive; ND = Nondestructive

CAUTION:
If the TN788 Voice Conditioner Circuit Pack (VC-BD) is not Vintage 2 or later, it must be replaced.

Note:

a. Refer to the repair procedure described in the XXX-BD (Common Port Circuit Pack) maintenance documentation for a description of this test.

Control Channel Loop Around Test (#52)

Refer to the repair procedure described in the XXX-BD (Common Port Circuit Pack) maintenance documentation as Control Channel Loop Around Test (#52).

VC-DSPPT

MO Name (in Alarm Log)	Alarm Level	Initial Command to Run[1]	Full Name of MO
VC-DSPPT	MAJOR	test port PCSSpp l r#	Voice Conditioner DSP Port
VC-DSPPT	MINOR	test port PCSSpp l r#	Voice Conditioner DSP Port
VC-DSPPT	WARNING	test port PCSSpp l r#	Voice Conditioner DSP Port

1 Where P is the port network number (1 for PPN and 2 or 3 for EPN); C is the carrier designation (for example, A, B, C, or D); and SS is the address of the slot in the carrier where the circuit pack is located (for example, 01, 02, ...).

Each Voice Conditioner Circuit Pack (VC-BD) provides two types of resources:

1. Transcoder Resources used for encoding and decoding audio formats
2. Summer Resources used for summing audio from different sources

The eight Voice Conditioner DSP ports are the transcoder resources on the VC-BD.

Error Log Entries and Test to Clear Values

Table 10-708. VC-DSPPT Error Log Entries

Error Type	Aux Data	Associated Test	Alarm Level	On/ Off Board	Test to Clear Value
0[1]	0	Any	Any	Any	test port PCSSpp sh r 1
18 (a)	0	busyout port PCSSpp	WNG	OFF	release port PCSSpp
257 (b)	Any	NPE Crosstalk Test (#6)	MIN	ON	test port PCSSpp 1 r 3
513 (c)	Any	VC DSP Port Local TDM Loopback Test (#1104)	MIN	ON	test port PCSSpp sh r 3
778 to 781 (d)	Any	VC Port Reset DSP Test (#1106)	MAJ	ON	See note (d)
1025 (e)			WNG	ON	
1281 (f)	Any	VC DSP Port DSP Loopback Test #(1105)	MIN	ON	test port PCSSpp sh r 3
3840 (g)					

1 Run the short test sequence first. If all test pass, run the long test sequence. Refer to the appropriate test description and follow the recommended procedures.

Notes:

a. This port has been busied out by the **busyout port PCSSpp** command.

b. The VC DSP Port NPE Crosstalk Test(#1103) failed.

c. The VC DSP Port Local TDM Loopback Test(#1104) failed. Run the Long Test Sequence.

d. A critical hardware failure has been detected on the circuit pack. Reset the port by the **busyout port PCSSpp** and **reset port PCSSpp** commands. If the VC Reset DSP Test (#1106) passes, then the on-board circuitry is healthy. Retire the alarm with the **test port PCSSpp long clear** command.

e. The VC DSP port reported loss of framing on the Service Channel between the VC and MMI circuit packs.

f. The VC DSP Port DSP Loopback Test (#1105) failed.

g. The DSP corresponding to this port on the VC circuit pack reported a firmware error. No action is required.

System Technician-Demanded Tests: Descriptions and Error Codes

Always investigate tests in the order presented in the table below. By clearing error codes associated with the DSP NPE Crosstalk Test, for example, you may also clear errors generated from other tests in the testing sequence.

Order of Investigation	Short Test Sequence	Long Test Sequence	D/ND[1]
DSP NPE Crosstalk Test (#1103)		X	D
TDM Loopback Test (#1104)	X	X	D
DSP Loopback Test (#1105)	X	X	D

1 D = Destructive; ND = Nondestructive

VC DSP Port NPE Crosstalk Test (#1103)

This test is destructive.

The NPE controls port connectivity and gain and provides conferencing functions. The NPE Crosstalk test verifies that this port's NPE channel talks on the selected time slot and never crosses over to time slots reserved for other connections. If the NPE is not working correctly, one-way and noisy connections may be observed. This test is part of the port's long test sequence and takes approximately 20 to 30 seconds to complete.

Table 10-709. TEST #1103 VC DSP Port NPE Crosstalk Test

Error Code	Test Result	Description/Recommendation
1000 1001	ABORT	System resources required to run this test are not available. The port may be busy with a valid call. 1. Retry the command at 1-minute intervals a maximum of 5 times.
2012	ABORT	Internal system error
2100	ABORT	Could not allocate the necessary resources to run this test. 1. Retry the command at 1-minute intervals a maximum of 5 times.
0-3	FAIL	The NPE of the tested port was transmitting in error. This causes noisy and unreliable connections. 1. Replace circuit pack.
	PASS	The port is correctly using its allocated time slots. 1. To be sure that this is not an intermittent problem, repeat this test a maximum of 10 times to make sure that it continues to pass. 2. If complaints still persist, examine the station, connections, and wiring.

VC DSP Port Local TDM Loopback Test (#1104)

This test is destructive.

This test verifies the connectivity of a VC DSP Port across the TDM bus. It aborts if calls associated with the port are in progress. Failure of this test indicates an on-board fault associated with the port hardware on the circuit pack. The Loopback Test runs the following tests:

1. A Looparound test across the TDM bus.
2. A conference Circuit Test.

The tests are run in the above order; if one test fails, an error code is returned and the remaining tests in the sequence are not executed.

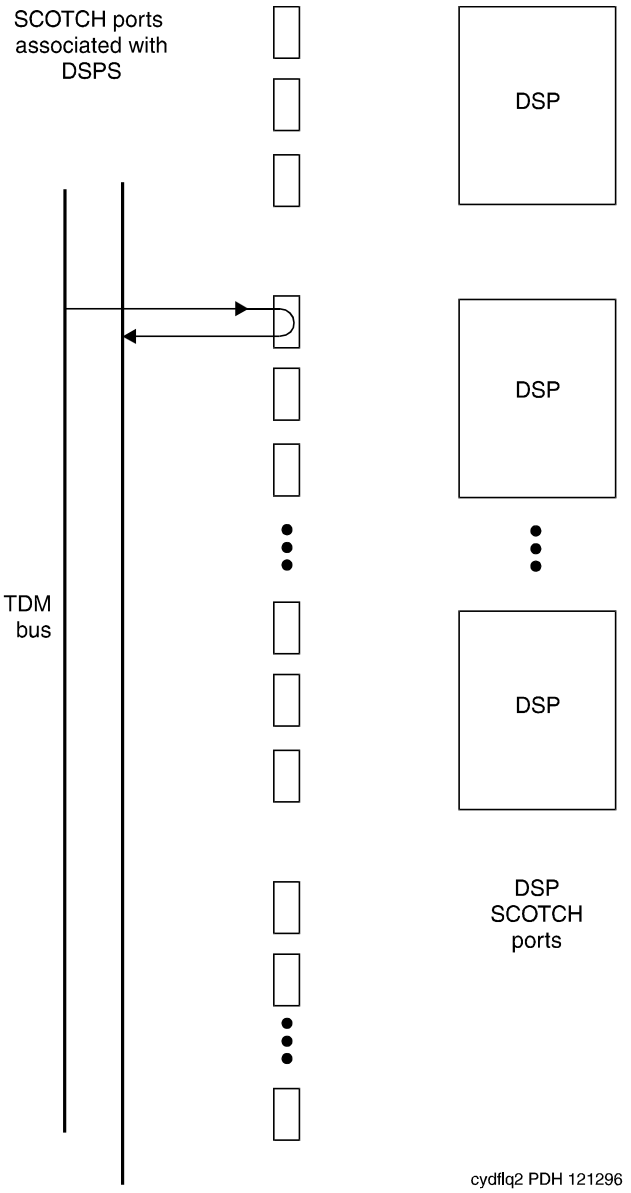

Figure 10-107. VC Circuit Pack DSP Port Local TDM Loopback Test

Table 10-710. TEST #1104 VC DSPPT Local TDM Loopback Test

Error Code	Test Result	Description/Recommendation
1000 1001	ABORT	System resources required to run this test are not available, or the port is busy with a valid call. 1. Retry the command at 1-minute intervals a maximum of 5 times.
1002	ABORT	The system could not allocate time slots for the test. The traffic load on the system is very high, or time slots may be out-of-service due to TDM-BUS errors. Refer to “TDM-BUS” to diagnose TDM Bus errors. 1. If the system has no TDM-BUS errors and is not handling heavy traffic, repeat the test at 1-minute intervals a maximum of 5 times.
1003	ABORT	The system could not allocate a Tone Detector for the test. The system is oversized for the number of Tone Detectors present, or some Tone Detectors are out-of-service. 1. Resolve any “TTR-LEV” errors. 2. Resolve any “TONE-PT” errors. 3. If neither condition exists, retry the test at 1-minute intervals.
1004	ABORT	The port is seized by a user for a valid call. Use the **status station** command for the station associated with this port and determine if the port is available for testing. 1. Retry the command at 1-minute intervals a maximum of 5 times.
2000	ABORT	Response to the test was not received from the VC-BD circuit pack within the allowable time period. 1. If this result occurs repeatedly, attempt to reset the port by using the **busyout port PCSSpp** and **reset port PCSSpp** commands. 2. If this result occurs again, replace the circuit pack.
2012	ABORT	Internal system error 1. Retry the command at 1-minute intervals a maximum of 5 times.
2100	ABORT	Could not allocate the necessary resources to run this test. 1. Retry the command at 1-minute intervals a maximum of 5 times.

Continued on next page

Table 10-710. TEST #1104 VC DSPPT Local TDM Loopback Test — *Continued*

Error Code	Test Result	Description/Recommendation
2103	ABORT	The system could not make the conference connection for the test. 1. Retry the command at 1-minute intervals a maximum of 5 times.
0-3	FAIL	The TDM Loop Around Test failed. 1. Replace circuit pack.
4-7	FAIL	The Conference Circuit Test failed. 1. Replace circuit pack.
	PASS	The VC DSP Port Local TDM Loop Around Test passed.

VC-DSP Port DSP Loopback Test (#1105)

This test is destructive.

This test verifies the connectivity of a VC-DSPPT across the TDM bus. It aborts if calls associated with the port are in progress. Failure of this test indicates an on-board fault associated with the port hardware on the circuit pack.

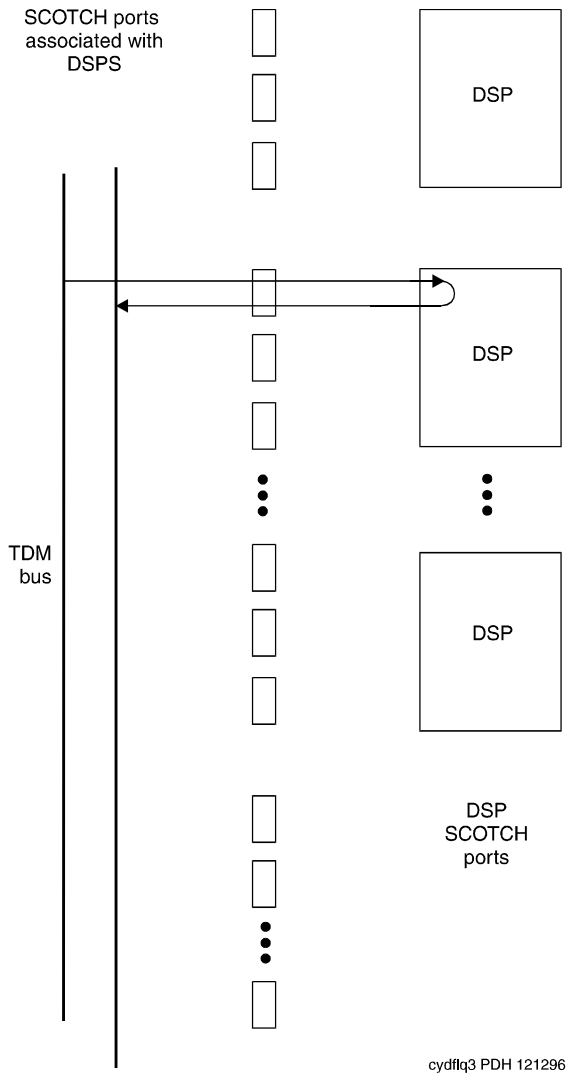

Figure 10-108. VC Circuit pack DSP Port DSP Looparound Test

Table 10-711. TEST #1105 VC-DSP Port DSP Loopback Test

Error Code	Test Result	Description/Recommendation
1000	ABORT	System resources required to run this test are not available, or the port is busy with a valid call. 1. Retry the command at 1-minute intervals a maximum of 5 times.
1002	ABORT	The system could not allocate time slots for the test, the traffic load on the system is very high, or time slots are out-of-service due to TDM-BUS errors. Refer to “TDM-BUS” to diagnose TDM Bus errors. 1. If the system has no TDM-BUS errors and is not handling heavy traffic, repeat the test at 1-minute intervals a maximum of 5 times.
1003	ABORT	The system could not allocate a Tone Detector for the test, the system is oversized for the number of Tone Detectors present, or some Tone Detectors are out-of-service. 1. Resolve any “TTR-LEV” errors. 2. Resolve any “TONE-PT” errors. 3. If neither condition exists, retry the test at 1-minute intervals a maximum of 5 times.
1004	ABORT	The port has been seized by a user for a valid call. Use the **status station** command for the station associated with this port and determine if the port is available for testing 1. Retry the command at 1-minute intervals a maximum of 5 times.
2000	ABORT	Response to the test request was not received from the VC-BD circuit pack within the allowable time period. 1. If this result occurs repeatedly, reset the circuit pack if the other ports are not in use by using the **busyout port PCSSpp** and **reset port PCSSpp** commands. 2. If this result occurs again, replace the circuit pack.
2012	ABORT	Internal system error 1. Retry the command at 1-minute intervals a maximum of 5 times.

Continued on next page

Table 10-711. TEST #1105 VC-DSP Port DSP Loopback Test — *Continued*

Error Code	Test Result	Description/Recommendation
2100	ABORT	Could not allocate the necessary system resources to run this test. 1. Rerun the test at 1-minute intervals a maximum of 5 times.
0, 1	FAIL	The VC-DSPPT DSP Loopback Test failed. 1. Replace the circuit pack.
	PASS	The VC DSPPT DSP Loopback Test passed

VC Port Reset DSP Test (#1106)

This test is destructive.

This test resets the VC-DSPPT and the DSP associated with it. As part of the reset procedure, the VC-DSPPT will execute a series of self- tests on the hardware. If these self- tests fail, the test will fail; otherwise the test will pass.

Before executing the test, the VC-DSPPT must be busied out by executing the **busy port PCSSpp** command. After the completion of the test, the VC-DSPPT must be released by executing the **release port PCSSpp** command.

Table 10-712. TEST #1106 VC Port Reset DSP Test

Error Code	Test Result	Description/Recommendation
1000	ABORT	System resources required to run this test are not available, or the port may be busy with a call. 1. Retry the command at 1-minute intervals a maximum of 5 times.
1015	ABORT	The VC-DSPPT is not busied out. 1. Busy out the VC-DSPPT by executing the **busy port PCSSpp** command and then retry the test.
2000	ABORT	Response to the test was not received from the VC-DSPPT within the allowable time period. 1. Retry the command at 1-minute intervals a maximum of 5 times. 2. If this result occurs again, replace the circuit pack.

Continued on next page

Table 10-712. TEST #1106 VC Port Reset DSP Test

Error Code	Test Result	Description/Recommendation
2012	ABORT	Internal system error 1. Retry the command at 1-minute intervals a maximum of 5 times.
2100	ABORT	Could not allocate the necessary resources for this test. 1. Retry the command at 1-minute intervals a maximum of 5 times.
	FAIL	The reset of the VC-DSPPT was unsuccessful. 1. Replace circuit pack.
	PASS	The VC-DSPPT was successfully reset. 1. Release the VC-DSPPT by executing the **reset port PCSSpp** command.

VC-LEV (Voice Conditioner DSP Port Level)

MO Name (in Alarm Log)	Alarm Level	Initial Command to Run	Full Name of MO
VC-LEV	MAJOR	See "Resolving VC-LEV Errors/Alarms"	VC-LEV

The MMCH feature must be enabled on the System-Parameters Customer-Options form before changing the fields.

The Voice Conditioner (VC) Port Level MO monitors VC efficiency by tracking the number of VC ports that are in-service, and then comparing that number with the value entered in the VC field on the System-Parameters Maintenance form. This `VCs` field is located under the Minimum Maintenance Thresholds section. The `VCs` field contains the minimum number of VC ports needed for the Multimedia Call Handling (MMCH) feature, and is an administrable field. The `VCs` field must contain a number between 0 and 126, and is entered by the system administrator. The MMCH feature must be enabled on the System-Parameters Customer-Options form before the `VCs` field can be changed to a number greater than 0. For example, administering 8 in that field means 1 circuit pack. The algorithm for determining that a low level of VC resources exists uses the number entered in the `VCs` field, and the number of VCs that are in-service in the system.

Each VC circuit pack contains 16 physical ports: 8 ports are reserved for VC-DSPPT ports, and the remaining 8 ports are designated as VC-SUMPT ports. The 8 DSP ports are made up of 4 encoder and 4 decoder resources that encode and decode audio formats. Thus, *one VC circuit pack is required for every 8 ports of MMCH port capacity*. If the number of in-service VC ports falls below the MMCH port capacity (value entered on the System-Parameters Maintenance form under the Minimum Maintenance Thresholds section and in the `VCs` field), a VEC-LEV error is logged. If this outage continues for 15 minutes a MAJOR alarm is raised.

Resolving VC-LEV Errors/Alarms

VC ports are a key part of the MMCH feature, any loss in the number of ports available for use degrades the MMCH customer defined service level.

If a VC circuit pack or port is busied out using the **busyout board** or **busyout port** command, these out-of-service ports are not included in the VC level calculation, thus allowing a technician to busy out a VC circuit pack for maintenance reasons without causing a MAJOR alarm to be raised.

NOTE:
When diagnosing a VC-LEV problem, resolve any alarms raised against VC-BD or VC-DSPPT maintenance objects. Clearing VC-BD or VC-DSPPT alarms may clear the VC-LEV alarm.

The VC circuit pack is maintained by the software similarly to the Tone Detector circuit pack. Tone Detector circuit packs may be removed and reinserted in any port board slot without administration. The same rule applies to VC circuit packs. If a VC circuit pack is removed from service logically (by failing the Archangel sanity scan test) or is removed from service physically (by physically removing the circuit pack from the carrier), no error/alarm is raised against VC-BD or VC-DSPPT maintenance objects. Therefore, if a VC-LEV error/alarm exists, and none has been raised against VC-BD or VC-DSPPT maintenance objects, a VC circuit pack may have been removed from service causing the VC-LEV error/alarm. To resolve a VC-LEV MAJOR alarm, restore the number of VC ports available for service to be equal to or more than the calculated port capacity (value entered in the `VCs` field).

To determine how many VC circuit packs are needed for MMCH:

1. Display the System-Parameters Maintenance form by executing the command **display system-parameters maintenance**.
2. Locate the number listed in the Minimum Maintenance Threshold (`VCs`) field. The MMCH feature requires one VC circuit pack for each four ports listed in the Minimum Maintenance Threshold (`VCs`) field.
3. Divide the Minimum Maintenance Threshold value by 8 to determine the number of VC circuit packs needed. For example, a port capacity of 12 listed in the Minimum Maintenance Threshold (`VCs`) field would require 2 VC circuit packs.
4. Use the **list configuration** command to verify that the number of VC circuit packs listed agrees with the required number of VC circuit packs (determined in step 3). If the number of VC circuit packs listed in the step 3 differs from the calculated number, restore the number of VC circuit packs to the correct value, in order to resolve the VC-LEV alarm.

Error Log Entries and Test to Clear Values

Table 10-713. VC-LEV Error Log Entries

Error Type	Aux Data	Associated Test	Alarm Level	On/ Off Board	Test to Clear Value
1 (a)	Any	None	MAJOR	OFF	

Notes:

a. The number of VC resources in the system that are in service has fallen below the calculated minimum value. If the number of in-service VC ports falls below the MMCH port capacity (value entered in the Minimum Maintenance Threshold `VCs` field on the system parameters maintenance form), a VEC-LEV error is logged. If this outage continues for 15 minutes a MAJOR alarm is raised. To resolve this alarm, correct the out-of-service problem by following the procedures below:

   1. See “VC-DSPPT” and “VC-BD” and resolve any associated alarms.
   2. If a VC-LEV error/alarm exist and none has been raised against VC-BD or VC-DSPPT maintenance objects, a VC circuit pack may have been removed from service causing the VC-LEV error/alarm. To resolve a VC-LEV MAJOR alarm, restore the number of VC ports available for service to be equal to or more than the calculated port capacity. See “Resolving VC-LEV ERRORS/ALARMS” for details.

System Technician-Demanded Tests: Descriptions and Error Code

There are no System Technician-Demanded test for VC-LEV.

VC-SUMPT

MO Name (in Alarm Log)	Alarm Level	Initial Command to Run[1]	Full Name of MO
VC-SUMPT	MAJ	test port PCSS l r#	Voice Conditioner Summer Port
VC-SUMPT	MIN	test port PCSS l r#	Voice Conditioner Summer Port
VC-SUMPT	WNG	test port PCSS s r#	Voice Conditioner Summer Port

1 Where UU is the universal cabinet number (1 for PPN and 2-3 for EPN); C is the carrier designation (for example, A, B, C, D, or E); SS is the address of the slot in the carrier where the circuit pack is located (for example, 01, 02, ...); and pp is the two digit port number (01, 02, 03, ...).

Each Voice Conditioner Circuit Pack (VC-BD) provides two types of resources:

1. Transcoder Resources that are used for encoding and decoding audio formats
2. Summer Resources that are used for summing audio formats from different sources.

The Voice Conditioner Summer ports (VC-SUMPT) are the summer resources on the VC-BD. There are 8 such ports on a VC-BD.

Error Log Entries and Test to Clear Values

Table 10-714. VC-SUMPT Error Log Entries

Error Type	Aux Data	Associated Test	Alarm Level	On/Off Board	Test to Clear Value
0[1]	0	Any	Any	Any	test port PCSSpp sh r 1
18 (a)	0	busyout port PCSS	WNG	OFF	release port PCSSpp
130 (b)			WNG	ON	test port PCSSpp sh
257 (c)	Any	Control Channel Loop Test (#52)	MIN	ON	test board PCSSpp 1 r 3
513 (d)	Any	VC Summer Port Local Loopback Test #(1100)	MIN	ON	test board PCSSpp sh r 3

1 Run the short test sequence first. If all test pass, run the long test sequence. Refer to the appropriate test description and follow the recommended procedures.

Notes:

a. This port has been busied out with the **busyout port PCSSpp** command.

b. The circuit pack has been removed or has been insane for more than 11 minutes. To clear the error, replace or reinsert the circuit pack.

c. The NPE Crosstalk Test(#1103) failed.

d. The VC Summer Port Local TDM Loopback Test(#1100) failed.

System Technician-Demanded Tests: Descriptions and Error Codes

Always investigate tests in the order presented in the table below. By clearing error codes associated with the Voice and Control Channel Local Loop Around Test, for example, you may also clear errors generated from other tests in the testing sequence.

Order of Investigation	Short Test Sequence	Long Test Sequence	D/ND[1]
NPE Crosstalk Test (#6) (a)		X	D
TDM Loopback Test (#1100)	X	X	D

1 D = Destructive; ND = Nondestructive

NPE Crosstalk Test (#6)

This test is destructive.

The NPE Crosstalk test verifies that this port's NPE channel talks on the selected time slot and never crosses over to time slots reserved for other connections. If the NPE is not working correctly, one-way and noisy connections may be observed. This test is part of the port's long test sequence and takes approximately 20 to 30 seconds to complete.

Table 10-715. TEST #6 NPE Crosstalk Test

Error Code	Test Result	Description/Recommendation
1000	ABORT	System resources required to run this test are not available. The port may be busy with a valid call. 1. Retry the command at 1-minute intervals a maximum of 5 times.
2012	ABORT	Internal system error
2100	ABORT	Could not allocate the necessary resources to run this test. 1. Retry the command at 1-minute intervals a maximum of 5 times.
	FAIL	The NPE of the tested port was transmitting in error, causing noisy and unreliable connections. 1. Replace the circuit pack.
	PASS	The port is correctly using its allocated time slots. 1. To be sure that this is not an intermittent problem, repeat this test a maximum of 10 times. 2. If complaints still persist, examine the station, connections, and wiring.

VC Summer Port Local TDM Loopback Test (#1100)

This test is destructive.

This test verifies the connectivity of a VC Summer Port across the TDM bus. It aborts if calls associated with the port are in progress. Failure of this test indicates an on-board fault associated with the port hardware on the circuit pack. The Loopback Test runs the following tests:

- A Looparound test across the TDM bus.
- A conference circuit test.

The tests are run in the above order. If the first test fails, the switch returns an error code, and the second test is not executed.

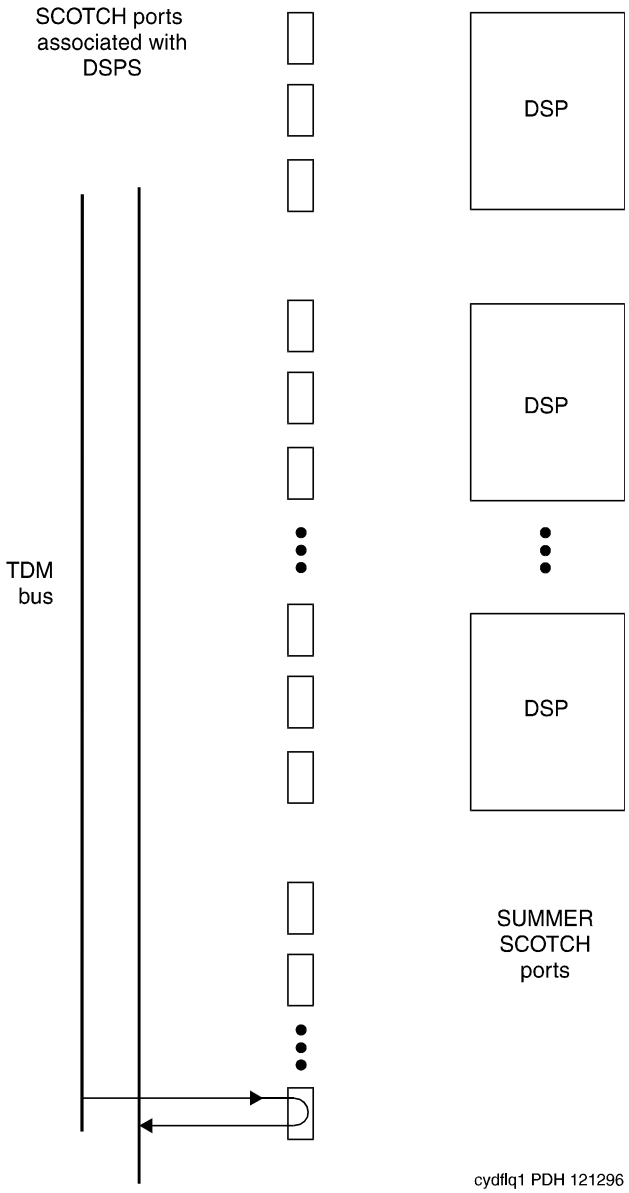

Figure 10-109. VC Circuit Pack Summer Port Loopback Test

Table 10-716. TEST #1100 VC Summer Port Local TDM Loopback Test

Error Code	Test Result	Description/Recommendation
1000	ABORT	System resources required to run this test are not available, or the port may be busy with a valid call. 1. Retry the command at 1-minute intervals a maximum of 5 times.
1002	ABORT	The system could not allocate time slots for the test. The traffic load on the system is very high or time slots are out-of-service due to TDM-BUS errors. Refer to TDM-BUS maintenance documentation to diagnose any active TDM Bus errors. 1. If the system has no TDM-BUS errors and is not handling heavy traffic, repeat the test at 1-minute intervals a maximum of 5 times.
1003	ABORT	The system could not allocate a Tone Detector for the test, the system is oversized for the number of Tone Detectors present, or some Tone Detectors are out-of-service. 1. Resolve any “TTR-LEV” errors. 2. Resolve any “TONE-PT” errors. 3. If neither condition exists, retry the test at 1-minute intervals a maximum of 5 times.
1004	ABORT	The port has been seized by a user for a valid call. Use **status station** for the station associated with this port to determine whether the port is available for testing. 1. Retry the command at 1-minute intervals a maximum of 5 times.

Continued on next page

Table 10-716. TEST #1100 VC Summer Port Local TDM Loopback Test — *Continued*

Error Code	Test Result	Description/Recommendation
2000	ABORT	Response to the test request was not received from the VC-BD circuit pack within the allowable time period. 1. If this result occurs repeatedly, reset the circuit pack if the other ports are not in use. Reset the circuit pack by issuing the **busyout board PCSS** and the **reset board PCSS** commands. 2. If this result occurs again, replace the circuit pack.
2012	ABORT	Internal system error
2100	ABORT	Could not allocate the necessary system resources to run this test.
2103	ABORT	The system could not make the conference connection for the test. 1. Retry the command at 1-minute intervals a maximum of 5 times.
0	FAIL	The TDM Loop Around Test failed.
1	FAIL	The Conference Circuit Test failed. 1. Replace circuit pack.
	PASS	The VC Summer Port Local TDM Loopback Test passed.

WAE-PORT (Wideband Access Endpoint Port)

MO Name (in Alarm Log)	Alarm Level	Initial Command to Run	Full Name of MO
WAE-PORT[1]	MINOR	test access-endpoint <extension> l	Wideband Access Endpoint Port
WAE-PORT	WARNING	test access-endpoint <extension>	Wideband Access Endpoint Port

1 For additional repair information, see also UDS1-BD (UDS1 Interface Circuit Pack) Maintenance documentation.

The Wideband Switching capability supports end-to-end connectivity between customer endpoints at data rates from 128 to 1536 kbps over T1 facilities and to 1984 kbps over E1 facilities. DEFINITY switching capabilities are extended to support wideband calls comprised of multiple DS0s that are switched end-to-end as a single entity.

The Wideband Switching capability extends the DEFINITY G3 Administered Connections feature to include non-signaling Wideband Access Endpoints. Endpoint application equipment with direct T1 or E1 interfaces may connect directly to the switch's line-side facilities. Application equipment without T1 or E1 interfaces requires a Terminal Adapter, such as a DSU/CSU. The terminal adapter or endpoint application equipment is connected to the Universal DS1 circuit pack (TN464C). These endpoints are administered as Access Endpoints, and they have no signaling interface to the switch. Instead, they simply transmit and receive data. (Some applications detect and respond to the presence or absence of data.) Calls are initiated from these endpoints using the Administered Connections feature.

Multiple Access Endpoints on one line-side UDS1 circuit pack (TN464C) facility are separate and distinct within the facility, and the endpoint application equipment must be administered to send and receive the correct data rate over the correct DS0s. All Administered Connections originating from Access Endpoints use the entire bandwidth administered for the Access Endpoint. An incoming call of a different data rate then that administered for the Access Endpoint cannot be routed to the Access Endpoint.

Although Wideband Access Endpoints are used primarily for line-side facilities, these endpoints can also be administered on network DS1 facilities to connect DEFINITY to non-switched network services, such as the AT&T fractional T-1 service. An example of this is the AT&T Static Integrated Network Access, where a trunk group to AT&T 4Ess Switched Services shares an access T-1 facility with a Wideband Access Endpoint. In this case, the Wideband Access Endpoint is connected to the AT&T fractional T-1 service, and it does not terminate on local endpoint equipment but is connected to a far-end CPE (for example, another

DEFINITY PBX) via the dedicated fractional T-1. All Wideband Access Endpoint functionality and operation is identical on both line-side and network facilities. However, because maintenance capabilities are limited to the Wideband Access Endpoint interface, and because faults can occur end-to-end, troubleshooting procedures based on an end-to-end view of the network is required.

Wideband Access Endpoint Port maintenance provides a strategy for maintaining a Wideband Access Endpoint Port via a port on the Universal DS1 interface circuit pack hardware. The maintenance strategy involves logging Wideband Access Endpoint Port hardware errors, running tests for port initialization, periodic and scheduled maintenance, system technician-demanded tests, and alarm escalation and resolution. Two different port service states are specified in the Wideband Access Endpoint Port maintenance. These states include *out-of-service*, where the port is in a deactivated state and cannot be used for calls, and *in-service*, where the port is in an activated state and can be used for calls. If the Universal DS1 Interface circuit pack (TN464C) is out-of-service, all ports on the Universal DS1 Interface circuit pack (TN464C) are placed into the out-of-service state.

Hardware Error Log Entries and Test to Clear Values

Wideband Access Endpoint Maintenance Error Log Entries

Error Type	Aux Data	Associated Test	Alarm Level	On/Off Board	Test to Clear Value
0[1]	0	Any	Any	Any	test access-endpoint <extension> sh r 1
18 (a)	0	busyout access-endpoint	WARNING	OFF	release access-endpoint <extension>
130 (b)		None	WARNING	ON	test access-endpoint <extension>
1281 (c)		Conference Circuit (Test #7)	MINOR	ON	test access-endpoint <extension> l r 4
1537 (d)		NPE Crosstalk Test (#6)	MINOR	ON	test access-endpoint <extension> l r 3
1793 (e)		None			test board PCSS long
3840 (f)	Any	Port Audit and Update (Test #36)			

1 Run the Short Test Sequence first. If all tests pass, run the Long Test Sequence. Refer to the appropriate test description and follow the recommended procedures.

Notes:

a. The wideband access endpoint has been busied out by a **busyout access-endpoint <extension>** command. No calls can be made to this extension.

b. The circuit pack has been removed, or it has been insane for more than 11 minutes. To clear the error, reinsert or replace the circuit pack.

c. The Conference Circuit Test (#7) failed on this port. See Test #7 for repair procedures.

d. The NPE Crosstalk Test (#6) failed on this port. See Test #6 for repair procedures.

e. There was a failure of the TN464C UDS1 Interface circuit pack. See UDS1-BD Maintenance documentation for details.

f. The Port Audit and Update Test (#36) failed due to an internal system error. Enter the **status access-endpoint <extension>** command and verify the status of the port. If the wideband access endpoint is out-of-service, enter the **release access-endpoint <extension>** command to put it back to in-service. Retry the test command. If the test continues to fail, escalate the problem.

System Technician-Demanded Tests: Descriptions and Error Codes

Always investigate tests in the order presented in the table below when inspecting errors in the system. By clearing error codes associated with the *NPE Crosstalk Test*, for example, you may also clear errors generated from other tests in the testing sequence.

Order of Investigation	Short Test Sequence	Long Test Sequence	D/ND[1]
NPE Crosstalk Test (#6)		X	ND
Conference Circuit Test (#7)		X	ND
Port Audit and Update Test (#36)	X	X	ND

1 D = Destructive; ND = Nondestructive

NPE Crosstalk Test (#6)

One or more Network Processing Elements (NPEs) reside on each circuit pack with a TDM Bus interface. (The TN464C UDS1 circuit pack has one SCOTCH-NPE chip instead of several NPE chips). The NPE controls port connectivity and gain, and it provides conferencing functions on a per-port basis. The NPE Crosstalk Test verifies that this port's NPE channel talks on the selected time slot and that it never crosses over to time slots reserved for other connections. If the NPE is not working correctly, one-way and noisy connections may be observed. This test is usually only part of a port's Long Test Sequence, and it takes between 20 and 30 seconds to complete.

Table 10-717. TEST #6 NPE Crosstalk Test

Error Code	Test Result	Description/Recommendation
	ABORT	System resources required for this test are not available. 1. Retry the command at one minute intervals a maximum of 5 times.
1000	ABORT	System resources required to run this test are not available. The port may be in use on a valid call. Use the **status access-endpoint <extension>** command to determine when the port is available for testing. 1. Retry the command at one minute intervals a maximum of 5 times. 2. If the test continues to abort, and if the port is not in use, escalate the problem.
1001	ABORT	System resources required for this test are not available. 1. Retry the command at one minute intervals a maximum of 5 times.
1002	ABORT	The system could not allocate time slots for the test. The system may be under heavy traffic conditions, or it may have time slots that are out-of-service due to TDM-BUS errors. The **status health** command can be used to determine if the system is experiencing heavy traffic. Refer to TDM-BUS Maintenance documentation to diagnose any active TDM-BUS errors. 1. If system has no TDM-BUS errors, and if it is not handling heavy traffic, repeat the test at one minute intervals a maximum of 5 times.

Continued on next page

Table 10-717. TEST #6 NPE Crosstalk Test — *Continued*

Error Code	Test Result	Description/Recommendation
1003	ABORT	The system could not allocate a tone receiver for the test. The system may be oversized for the number of Tone Detectors present, or some Tone Detectors may be out-of-service. The **list measurement tone-receiver** command displays information on the system's tone receivers. 1. Look for TTR-LEV errors in the Error Log. If errors are present, refer to TTR-LEV Maintenance documentation. 2. Look for TONE-PT errors in the Error Log. If errors are present, refer to TONE-PT Maintenance documentation. 3. If neither condition exists, retry the test at one minute intervals a maximum of 5 times.
1004	ABORT	The port has been seized by a user for a valid call. Use the **status access-endpoint <extension>** command to determine when the port is available for testing. The port is available when it is in the **in-service/idle** state. 1. Retry the command at one minute intervals a maximum of 5 times. 2. If the test continues to abort, and if the port is not in use, escalate the problem.
1020	ABORT	The test did not run due either to a previously existing error on the specific port or to a more general circuit pack error. 1. Examine the Error Log for existing errors against this port or the circuit pack, and attempt to diagnose the already existing error.
2000	ABORT	Response to the test request was not received within the allowable time period.
2100	ABORT	System resources required for this test are not available. 1. Retry the command at one minute intervals a maximum of 5 times.
	FAIL	The NPE of the tested port was found to be transmitting in error. This causes noisy and unreliable connections. 1. Replace the circuit pack.
	PASS	The port is correctly using its allocated time slots. 1. User-reported troubles on this port should be investigated by using other port tests and by examining the terminal adapter or the external wiring.

Conference Circuit Test (#7)

One or more Network Processing Elements (NPEs) reside on each circuit pack with a TDM Bus interface. (The TN464C UDS1 circuit pack has one SCOTCH-NPE chip instead of several NPE chips). The NPE controls port connectivity and gain, and it provides conferencing functions on a per-port basis. The Conference Circuit Test verifies that the NPE channel for the port being tested can correctly perform the conferencing function. The NPE is instructed to listen to several different tones and to conference the tones together. The resulting signal is then measured by a Tone Detector port. If the level of the tone is within a certain range, the test passes.

Table 10-718. TEST #7 Conference Circuit Test

Error Code	Test Result	Description/Recommendation
	ABORT	System resources required for this test are not available. 1. Retry the command at one minute intervals a maximum of 5 times.
1000	ABORT	System resources required to run this test are not available. The port may be in use on a valid call. Use the **status access-endpoint <extension>** command to determine when the port is available for testing.
1004	ABORT	The port has been seized by a user for a valid call. Use the **status access-endpoint <extension>** command to determine when the port is available for testing. The port is available when it is in the **in-service/idle** state. 1. Retry the command at one minute intervals a maximum of 5 times. 2. If the test continues to abort, and if the port is not in use, escalate the problem.
1020	ABORT	The test did not run due either to a previously existing error on the specific port or to a more general circuit pack error. 1. Examine the Error Log for existing errors against this port or circuit pack, and attempt to diagnose the previously existing error.

Continued on next page

Table 10-718. TEST #7 Conference Circuit Test — *Continued*

Error Code	Test Result	Description/Recommendation
2000	ABORT	Response to the test request was not received within the allowable time period.
2100	ABORT	System resources required for this test are not available. 1. Retry the command at one minute intervals a maximum of 5 times.
	FAIL	The NPE of the tested port did not conference the tones correctly. This causes noisy and unreliable connections. Although wideband calls do not use the conferencing feature on the NPE, this failure indicates problems with the circuit pack hardware. 1. Replace the circuit pack.
	PASS	The port can correctly conference multiple connections. 1. User-reported troubles on this port should be investigated by using other port tests and by examining the terminal adapter or the external wiring.

Port Audit and Update Test (#36)

This test sends port level translation data from switch processor to the UDS1 Interface circuit pack to ensure that the wideband access endpoint port's translation is correct.

Table 10-719. TEST #36 Audit and Update Test

Error Code	Test Result	Description/Recommendation
	ABORT	Internal System Error. 1. Retry the command at one minute intervals a maximum of 5 times.
1006	ABORT	The port is out-of-service. If the port is busied out: 1. Issue **release access-endpoint <extension>** command to put the port back into in-service. 2. Retry the test command. If the port is not busied out: 1. Check the error and alarm logs for WAE-PORT and UDS1-BD errors and alarms. Follow the recommended repair procedures.
2000	ABORT	Response to the test request was not received within the allowable time period.
2100	ABORT	Could not allocate the necessary system resources to run this test. 1. Retry the command at one minute intervals a maximum of 5 times.
	FAIL	Internal system error. 1. Retry the command at one minute intervals a maximum of 5 times.
	PASS	Port translation has been updated successfully.

XXX-BD (Common Port Circuit Pack)

The Common Port Circuit Pack Maintenance is a set of common tests used by all the circuit packs with the generic hardware that interfaces with the TDM bus. Circuit packs included in this category are listed on the following pages.

MO Name (in Alarm Log)	Alarm Level	Initial Command to Run[1]	Full Name of MO
XXX-BD[2]	MAJOR	test board PCSS	Common Port Circuit Pack Maintenance
XXX-BD[2]	MINOR	test board PCSS	Common Port Circuit Pack Maintenance
XXX-BD[2]	WARNING	test board PCSS	Common Port Circuit Pack Maintenance

1 Where P is the port network number (1 for PPN and 2 or 3 for EPN); C is the carrier designation (for example, A, B, C, D, or E); and SS is the address of the slot in the carrier where the circuit pack is located (for example, 01, 02,...etc.)

2 Refer to the appropriate circuit pack documentation to get the correct MO name displayed in this field. It usually ends with BD.

Notes:

a. All circuit pack suffixes (B,C, D, etc.) are also supported by the XXX-BD (Common Port Circuit Pack) Maintenance documentation.

b. The XXX-BD designation is also used in the SAT display in the case where a **reset board command** is issued to a circuit pack type which is in conflict to the actual circuit pack type administered for that slot or when a **reset board** command is issued to an empty circuit pack slot.

When any of the Common Port Circuit Packs (except the TN754 Digital Line and TN758 Pooled Modem circuit packs) are physically removed from the backplane, no alarm is logged for approximately 11 minutes. In the case of the Digital Line and Pooled Modem circuit packs, approximately 21 minutes elapse before an alarm is logged. When a circuit pack that has been removed is alarmed, the alarm type is minor and is classified as an on-board alarm. The time delay permits maintenance activity to be performed without triggering an additional alarm. **An alarm is logged only against a Common Port Circuit Pack on which ports have been administered.** See the next Note.

NOTE:
In a heavily loaded system, the interval between the removal of a Common Port Circuit Pack and the logging of the alarm may be several minutes longer.

XXX-BD Common Circuit Packs

The following list of circuit packs are listed by apparatus code, including circuit packs used in non-United States installations. .

Table 10-720. XXX-BD Common Circuit Packs

Apparatus Code	Name	Type
(TN566) (TN567)	DEFINITY AUDIX R3 System	Port Assembly
(TN2208)	Call Visor ASAI over the DEFINITY (LAN) Gateway R1	Port Assembly
TN417	Auxiliary Trunk	Port
TN419B	Tone-Clock	Control
TN420B/C	Tone Detector	Service
TN429	Direct Inward/Outward Dialing (DIOD) Trunk	Port
TN433	Speech Synthesizer	Service
TN436B	Direct Inward Dialing Trunk	Port
TN437	Tie Trunk	Port
TN438B	Central Office Trunk	Port
TN439	Tie Trunk	Port
TN447	Central Office Trunk	Port
TN457	Speech Synthesizer	Service
TN458	Tie Trunk	Port
TN459B	Direct Inward Dialing Trunk	Port
TN464C/ D/E/ F	DS1/E1 Interface - T1, 24 Channel - E1, 32 Channel	Port
TN465/B/C	Central Office Trunk	Port
TN467	Analog Line	Port
TN468B	Analog Line	Port
TN479	Analog Line	Port
TN497	Tie Trunk	Port
TN553	Packet Data Line	Port
TN556/B	ISDN-BRI 4-Wire S/T-NT Line (A-Law)	Port
TN570/B/C	Expansion Interface	Port
TN572	Switch Node Clock	Control
TN573/B	Switch Node Interface	Control
TN574	DS1C - T1, 24 Channel	Port
TN577	Packet Gateway - G3r Only	Port
TN722B	Digital Signal Level 1 Tie Trunk	Port
TN725B	Speech Synthesizer	Service

Continued on next page

Table 10-720. XXX-BD Common Circuit Packs — *Continued*

Apparatus Code	Name	Type
TN726/B	Data Line	Port
TN735	MET Line	Port
TN742	Analog Line	Port
TN744	Call Classifier	Service
TN744/B/C	Call Classifier - Detector	Service
TN744D	Call Classifier - Detector - Multi-Country	Service
TN746/B	Analog Line	Port
TN747B	Central Office Trunk	Port
TN748/B/C/D	Tone Detector	Service
TN750/B	Announcement	Service
TN750C	Announcement	Service
TN753	Direct Inward Dialing Trunk	Port
TN754/B	Digital Line 4-Wire DCP	Port
TN755B	Neon Power Unit	Power
TN756	Tone Detector	Service
TN758	Pooled Modem	Port
TN760B/C/D	Tie Trunk	Port
TN762B	Hybrid Line	Port
TN763B/C/D	Auxiliary Trunk	Port
TN765	Processor Interface	Control
TN767B/C/D/E	DS1 Interface - T1, 24 Channel	Port
TN768	Tone-Clock	Control
TN769	Analog Line	Port
TN771D	Maintenance/Test	Service
TN772	Duplication Interface	Control
TN775/B	Maintenance	Service
TN776	Expansion Interface	Port
TN777/B	Network Control	Control
TN778	Packet Control	Control
TN780	Tone-Clock	Control
TN786	Processor	Control
TN786B	Processor	Control
TN789	Radio Controller	Control
TN790	Processor	Control
TN791	Guest Line (16-Port Analog Line)	Port

Continued on next page

Table 10-720. XXX-BD Common Circuit Packs — *Continued*

Apparatus Code	Name	Type
TN797	Analog Trunk and Line	Port
TNCCSC-1	CCSC-1 PRI to DASS Converter	Port
TNCCSC-2	CCSC-2 ISDN PRI to DPNSS Converter	Port
TNPRI/BRI	PRI to BRI Converter	Port
TN2135	Analog Line	Port
TN2136	Digital Line 2-Wire DCP	Port
TN2138	Central Office Trunk	Port
TN2139	Direct Inward Dialing Trunk	Port
TN2140/B	Tie Trunk	Port
TN2144	Analog Line	Port
TN2146	Direct Inward Dialing Trunk	Port
TN2147/C	Central Office Trunk	Port
TN2149	Analog Line	Port
TN2180	Analog Line	Port
TN2181	Digital Line 2-wire DCP	Port
TN2182/B	Tone-Clock - Tone Detector and Call Classifier	Control
TN2183	Analog Line	Port
TN2184	DIOD Trunk	Port
TN2198	ISDN-BRI 2-Wire U Interface	Port
TN2199	Central Office Trunk	Port
TN2224	Digital Line, 24-Port, 2-Wire DCP	Control
TN2404	Processor	Control

Hardware Error Log Entries and Test to Clear Values

Common Port Circuit Pack Maintenance Error Log Entries

Error Type	Aux Data	Associated Test	Alarm Level	On/Off Board	Test to Clear Value
0[1]	0	Any	Any	Any	test board PCSS sh r 1
1(a)	0	Circuit pack removed or SAKI Sanity Test (#53)	MINOR	ON	
18(b)	0	busyout board PCSS	WARNING	OFF	release board PCSS
23(c)	0	None	WARNING	OFF	
36 (d)	4368	none			
125 (e)		None	MINOR	ON	
217[2] (f)	0	None	WARNING	ON	
257	65535	Control Channel Test (#52)	MINOR	ON	test board PCSS sh r 20
257 (g)	Any	None			
267 (f)	0	None	WARNING	ON	
513 (h)	Any	None	MINOR	ON	test board PCSS sh
769 (i)	4358	None			
1025 (j)	4363	NPE Audit Test (#50)			test board PCSS l r 20
1281 (k)		Ringing Application Test (#51)	MINOR	ON	test board PCSS r 2
1538 (l)	Any	None	WARNING/ MINOR	ON	
1793 (m)		Neon Test (#220)	MINOR	ON	test board PCSS r 2
3840 (n)	Any	None			
3999 (o)	Any	None			

1 Run the Short Test Sequence first. If all tests pass, run the Long Test Sequence. Refer to the appropriate test description and follow the recommended procedures.

2 G3iV1-1.286 or G3iV2-386 only

Notes:

a. This error indicates the circuit pack totally stopped functioning or it was physically removed from the system. This error type is not applicable to ANN-BD, DETR-BD, S-SYN-BD, M/T-BD, or CLSFY-BD.

NOTE:
The alarm is logged approximately 11 minutes after the circuit pack has been removed and/or SAKI Sanity Test (#53) fails.

If the circuit pack is not in the system, insert a circuit pack (in the same slot as the error indicates) to resolve this error. Or, if the circuit pack is in the system and the red LED is on, follow the instructions for “Red (alarm)” in the ‘‘Control and port circuit pack status LEDs’’ section in Chapter 7, ‘‘LED Interpretation’’ (See also the ‘‘Handling Control Circuit Packs’’ section in Chapter 5, ‘‘Routine Maintenance Procedures’’)

b. This error indicates the circuit pack has been busied out. Release the circuit pack via **release board PCSS**.

c. The circuit pack has been logically administered but not physically installed. The alarm should clear when the circuit pact is installed.

If the circuit pack is already installed:

1. Run **test board PCSS long** and look at any test failures or error codes generated.
2. If the test does not clear error 23, then execute **reset board PCSS** and run the long test again.
3. If the reset/test does not clear error 23, replace the circuit pack.

d. This error applies only to the Maintenance/Test circuit pack (TN771B or TN771C). The error indicates that the hardware associated with the Analog Trunk Testing port of the circuit pack failed to initialize. This port is **not** used in G3iV1.1-286 or G3iV2-386. Note, however, that when this error occurs, the Maintenance/Test circuit pack may report an invalid vintage. Although this error is not service-affecting, the Maintenance/Test circuit pack should be replaced.

e. A wrong circuit pack is inserted in the slot where this circuit pack is logically administered. To resolve this problem, either remove the wrong circuit pack and insert the logically administered circuit pack OR use the **change circuit-pack** command to readminister this slot to match the circuit pack inserted.

f. This error applies to the Maintenance/Test circuit pack (TN771D), Tone Detector (TN748B, TN748C, or TN748D), and Call Classifier (TN748) circuit packs. For the Maintenance/Test circuit pack, the error indicates that there is more than one Maintenance/Test circuit pack in the port network. For the Tone Detector or Call Classifier packs, the error indicates that there are more than 10 circuit packs in the system. Remove the circuit pack against which the error is logged.

g. This error indicates transient communication problems with this circuit pack. This error is not service-affecting and no action is required.

h. This error, when reported with Aux data in the range of 4352 to 4358, indicates that the circuit pack has reported an on-board hardware failure. The circuit pack continuously tests the hardware and report the results approximately every 10 minutes. If the hardware problem is resolved, the “leaky bucket” strategy should clear the alarm in approximately 30 minutes. However, if the alarm does NOT clear in 30 minutes, the circuit pack should be replaced.

i. This error can be ignored, but look for other errors on this circuit pack.

j. This error is not service-affecting and no action is required.

k. This error indicates that no ringing current is detected. Run Test #51, Ringing Application Test, and follow the procedures for Test #51. This error is only applicable to Analog Line circuit packs.

l. The hyperactive circuit pack is out-of-service and may exhibit one or more of the following symptoms:

   1. The common circuit pack level tests such as Test #51 and/or Test #220 are aborting with error code 2000.
   2. The tests run on the ports of this circuit pack are returning with a NO-BOARD.
   3. A busyout/release of the circuit pack has no affect on test results.
   4. A **list configuration** command shows that the circuit pack and ports are properly installed.

   If the XXX-BD is not a TN754 Digital Line Circuit Pack (DIG-BD), and if this error happens again within 15 minutes, replace the circuit pack. If the XXX-BD is a TN754 Digital Line Circuit Pack (DIG-BD), check the alarm level. If the alarm level is a WARNING, this indicates that users are probably causing the hyperactivity by playing with their digital stations. If the circuit pack is really hyperactive, this alarm is upgraded to a MINOR alarm within one hour. If the alarm level is a MINOR alarm, replace the circuit pack. (Refer to the ‘‘Handling Control Circuit Packs’’ section in Chapter 5, ‘‘Routine Maintenance Procedures’’.)

m. This error indicates that no neon current is detected. Run Test #220, Neon Test, and follow the procedures for Test #220. This error is applicable only to TN769 and TN746 Analog Line circuit packs.

n. This error is not service-affecting and no action is required.

o. Error type 3999 indicates that the circuit pack sent a large number of control channel messages to the switch within a short period of time. If error type 1538 is also present, then the circuit pack was taken out-of-service due to hyperactivity. If error type 1538 is not present, then the circuit pack has not been taken out-of-service, but it has generated 50% of the messages necessary to be considered hyperactive. This may be completely normal during heavy traffic periods. However, if this error type is logged when the circuit pack is being lightly used, it may indicate a problem with the circuit pack or the equipment attached to it.

System Technician-Demanded Tests: Descriptions and Error Codes

Always investigate tests in the order presented in the table below when inspecting errors in the system. By clearing error codes associated with the *Control Channel Loop Around Test*, for example, you may also clear errors generated from other tests in the testing sequence.

Order of Investigation	Short Test Sequence	Long Test Sequence	Reset Board Sequence	D/ ND[1]
NPE Audit Test (#50)		X		ND
Ringing Application Test (#51) (a)	X	X		ND
Control Channel Loop Around Test (#52)	X	X		ND
SAKI Sanity Test (#53)		X	D	
Neon Test (#220) (b)	X	X		ND

1 D = Destructive; ND = Nondestructive

a. Only applicable to Analog Line circuit packs.

b. Only applicable to TN746 and TN769 Analog Line circuit packs.

NPE Audit Test (#50)

The system sends a message to the on-board microprocessor to update the network connectivity translation for all the Network Processing Elements (NPEs) on the circuit pack.

Table 10-721. TEST #50 NPE Audit Test

Error Code	Test Result	Description/Recommendation
none or 2100	ABORT	System resources required for this test are not available.
1019	ABORT	Test already in progress.
	FAIL	Internal System Error. 1. Retry the command at 1-minute intervals a maximum of 5 times.
	PASS	The circuit pack's NPEs have been updated with their translation.
	EXTRA BD	Certain circuit packs have limitations on how many circuit packs can be in the system or port network such as the Maintenance/Test circuit pack (TN771B or TN771C), the Tone Detector circuit pack (TN748B, TN748C or TN748D) and the Call Classifier (TN744). The Maintenance/Test circuit pack allows only one circuit pack per port network. The Tone Detector and Call Classifier allow only 10 circuit packs in each system. All additional circuit packs return EXTRA-BD and should be removed.
any	NO BOARD	This is normal if the test is being done when (a) the circuit pack is not physically in the system or (b) the system is booting up. Otherwise, there is some inconsistency between the physical configuration and the data kept in the system. 1. Verify that the circuit pack is physically in the system. 2. Verify that the system is not in a stage of booting up. 3. Retry the command at 1-minute intervals for a maximum of 5 times.

Ringing Application Test (#51)

This test checks the ringing application circuitry common to all ports on an Analog Line circuit pack.

Table 10-722. TEST #51 Ringing Application Circuit Test

Error Code	Test Result	Description/Recommendation
1000 or 2100	ABORT	Could not allocate the necessary system resources to run test.
	ABORT	Could not allocate the necessary system resources to run test. The circuit pack is not installed. Internal System Error.
2000	ABORT	There was no response from the board. 1. If error type 1538 (hyperactivity) is present in the error log, follow the maintenance strategy that is recommended for this error type. 2. Run the **busyout board**, **reset board**, and **release busy board** commands, and then retest. 3. If the test still aborts, dispatch with the circuit pack. 4. Check the off-board wiring and the terminal, and, if there are no problems found, replace the circuit pack.
1004	ABORT	The port was seized by a valid call during the test. The test has been aborted. Use the **display port PCSSpp** command to determine the station extension. Use the **status station** command to determine the service state of the port. If the service state indicates that the port is in use, the port is unavailable for certain tests. (Refer to the “Status Commands” section in Chapter 8, ‘‘Maintenance Commands and Trouble-Clearing Aids’’ for a full description of all possible states.) You must wait until the port is idle before retesting. 1. Retry the command at 1-minute intervals a maximum of 5 times. 2. If the test continues to abort and the port is idle, escalate the problem.

Continued on next page

Table 10-722. TEST #51 Ringing Application Circuit Test — *Continued*

Error Code	Test Result	Description/Recommendation
1008	ABORT	Could not allocate a ringing circuit for one of the following reasons: all the ringing circuits are in use; the ringing generator is defective; ringing generator is not wired correctly. 1. If the test continues to abort, look for RING-GEN error in Error Log. a. If there are RING-GEN errors, refer to RING-GEN Maintenance documentation and try to resolve any problem(s). Go to Step 2. b. If there are no RING-GEN errors, and the test continues to abort, issue the **test board PCSS** command on other TN742, TN769, or TN746 Analog circuit packs. If an ABORT with error code 1008 occurs for this test on other circuit packs as well, the ringing generator may be defective or may not be wired properly. Refer to RING-GEN Maintenance documentation for details. If an ABORT with error code 1008 does NOT occur on the other ports, then all four ring generators are in use. Exit from this documentation. 2. Retry the command.

Continued on next page

Table 10-722. TEST #51 Ringing Application Circuit Test — *Continued*

Error Code	Test Result	Description/Recommendation
	FAIL	No ringing current is detected. The ringing application circuitry on this circuit pack probably is not healthy. 1. Retry the command again. 2. If the test continues to fail, look for RING-GEN error in Error Log. a. If there are RING-GEN errors, refer to the RING-GEN Maintenance documentation and try to resolve any problem(s). b. If there are no RING-GEN errors, replace the circuit pack. 3. Retry the command again.
	PASS	Ringing current is detected or this vintage of the Analog Line circuit pack does not support the Ringing Application Circuit Test. Analog Line circuit packs that DO NOT support Test #51 include TN712 Vintage 13 and earlier and TN742 Vintage 3 and earlier.
any	NO BOARD	This is normal if the test is being done when (a) the circuit pack is not physically in the system or (b) the system is booting up. Otherwise, there is some inconsistency between the physical configuration and the data kept in the system. 1. Verify that the circuit pack is physically in the system. Verify that the system is not in a stage of booting up. 2. Retry the command at 1-minute intervals for a maximum of 5 times.

Control Channel Loop Around Test (#52)

This test queries the circuit pack for its circuit pack code and vintage and verifies its records.

Table 10-723. TEST #52 Control Channel Loop Around Test

Error Code	Test Result	Description/Recommendation
none or 2100	ABORT	System resources required for this test are not available. 1. Retry the command at 1-minute intervals a maximum of 5 times.
	FAIL	The test failed because the circuit pack failed to return the circuit pack code or vintage. 1. Retry the command for a maximum of 5 times. 2. If the test still fails, issue the **busyout board**, **reset board**, and **release busy board** commands, and then retest. 3. If the problem continues, replace the circuit pack. 4. Run the test again.
	PASS	Communication with this circuit pack is successful.
	EXTRA BD	This result should only appear for the TN771B or TN771C Maintenance/Test circuit pack. More than one circuit pack has been installed in this port network. Remove this circuit pack.
any	NO BOARD	This is normal if the test is being done when (a) the circuit pack is not physically in the system or (b) the system is booting up. Otherwise, there is some inconsistency between the physical configuration and the data kept in the system. 1. Verify that the circuit pack is physically in the system. 2. Verify that the system is not in a stage of booting up. 3.) Retry the command at 1-minute intervals for a maximum of 5 times.

SAKI Sanity Test (#53)

This test is destructive.

This test resets the circuit pack.

This test is executed as part of the long test sequence only for the Tone-Clock circuit pack and DS1 interface circuit packs. All other common circuit packs can

be reset via **reset board PCSS** command. The **reset** command executes this test.

Table 10-724. TEST #53 SAKI Sanity Test

Error Code	Test Result	Description/Recommendation
none	ABORT	System resources required for this test are not available. 1. Retry the command at 1-minute intervals a maximum of 5 times.
1005	ABORT	Wrong circuit pack configuration to run this test. This error applies only to DS1 interface circuit packs. It means the DS1 interface circuit pack is providing timing for the system and, therefore, it cannot be reset without major system disruptions. 1. If the circuit pack needs to be reset, set synchronization to another DS1 interface circuit pack or the Tone-Clock circuit pack and try again. Refer to SYNC (Synchronization) Maintenance documentation.
1015	ABORT	Port is not out-of-service. 1. Busy out the circuit pack. 2. Execute command again.
2100	ABORT	System resources required for this test are not available. 1. Retry the command at 1-minute intervals a maximum of 5 times.
1	FAIL	The circuit pack failed to reset.
2	FAIL	The circuit pack failed to restart. 1. Execute command again. 2. If the problem persists, replace the circuit pack.
	PASS	The circuit pack initializes correctly. 1. Run the Short Test Sequence.
any	NO BOARD	This is normal if the test is being done when (a) the circuit pack is not physically in the system or (b) the system is booting up. Otherwise, there is some inconsistency between the physical configuration and the data kept in the system. 1. Verify that the circuit pack is physically in the system. 2. Verify that the system is not in a stage of booting up. 3. Retry the command at 1-minute intervals for a maximum of 5 times.

Neon Test (#220)

This test checks the voltage required to light the neon lamp on an analog terminal. A relay connects a 150V DC source from the backplane of the circuit pack onto the voltage bus, and another relay connects a 2K shunt from the bus to ground. Current in the line is then monitored to determine if the voltage is present.

The neon test runs only for TN746 and TN769 Analog circuit packs. If the circuit pack is not a TN746 or TN769, the test returns PASS, but there is no testing done to the circuit pack.

Table 10-725. TEST #220 Neon Test

Error Code	Test Result	Description/Recommendation
1004	ABORT	The port was seized by a valid call during the test. The test has been aborted. Use **display port PCSSpp** to determine the station extension. Use **status station** to determine the service state of the port. If the service state indicates that the port is in use, then the port is unavailable for certain tests. (Refer to the "Status Commands" section in Chapter 8, ''Maintenance Commands and Trouble-Clearing Aids'' for a full description of all possible states.) You must wait until the port is idle before retesting. 1. Retry the command at 1-minute intervals a maximum of 5 times.
1008	ABORT	Could not allocate a ringing circuit. Either all the ringing circuits are in use, or the ringing generator is defective or is not wired correctly. 1. Retry the command at 1-minute intervals a maximum of 5 times. 2. If the test continues to abort, look for RING-GEN errors in the Error Log. If an ABORT 1008 occurs for this test on other circuit packs as well, then the ringing generator may be defective or is not wired correctly (see errors for RING-GEN). If it doesn't occur on port test 48 for ANL-16-L, then all four ring phases are in use.

Continued on next page

Table 10-725. TEST #220 Neon Test — *Continued*

Error Code	Test Result	Description/Recommendation
1018	ABORT	There are not any translated ports on the circuit pack, or if there are ports, then none are administered to have “neon.” 1. Verify that there are ports administered on the circuit pack. If no ports are administered, no further action is required. 2. Make sure a TN755 or TN752 power unit circuit pack is installed. 3. Verify that you have neon sets connected (AT&T sets that may be neon sets are 500 and 2500 series, also some non-AT&T may also be neon sets). If no neon sets are connected to the circuit pack, the test continues to abort, but no further action is required. 4. If there are no neon sets connected to the circuit pack, at least one port needs to be translated with neon. To check if a port is translated with neon, use **display port PCSSpp** to determine the station extension of any station on this circuit pack. Use **display station <extension>** to determine if the port is administered with neon. The field “Message Waiting Indicator:” must be set to “neon” for at least one of the administered ports. If this field is not administered to “neon” the test continues to abort. This is acceptable because not all stations have neon lamps on their analog terminals. If none of the terminals have neon lamps, the the test continues to abort, but no further action is required.
1018	ABORT *(cont’d.)*	5. Retry the command again. 6. If the test continues to abort with neon translated ports, escalate the problem. 7. Retry the command at 1-minute intervals a maximum of 5 times. 8. If the test continues to abort, look for RING-GEN errors in the Error Log. If an ABORT 1008 occurs for this test on other circuit packs as well, then the ringing generator may be defective or is not wired correctly (see errors for RING-GEN). If it doesn’t occur on port test 48 for ANL-16-L, all four ring phases are in use. 9. If the test to continues to abort, escalate the problem. 10. Retry the command again. 11. If the test continues to abort with neon translated ports, escalate the problem.

Continued on next page

Table 10-725. TEST #220 Neon Test — *Continued*

Error Code	Test Result	Description/Recommendation
2000	ABORT	Response to the request was not received within the allowable time period.
2100	ABORT	Could not allocate the necessary system resources to run this test.
	ABORT	Could not allocate the necessary system resources to run this test. Internal System Error. 1. If Error Type 1538 is present in the Error Log, follow the recommended maintenance strategy.
	FAIL	The test failed because no neon current was detected. 1. Determine if there is a TN755 or TN752 power unit circuit pack installed in the same carrier as the TN746 or TN769 analog line circuit pack that failed the test. Look for the failure of test 220 on other TN746 or TN769 circuit packs in the carrier. If test 220 fails on the other circuit packs, replace the TN755 or TN752 power unit circuit pack. 2. Retry the command again. 3. If the test continues to fail, replace the circuit pack. 4. Retry the command again.
	PASS	This circuit pack is a TN746 or TN769 Analog Line circuit pack and the neon current is detected. This test also returns PASS for circuit packs that are not TN746 or TN769 circuit packs, but the test is not run on the circuit pack and the results of this test can be ignored.
any	NO BOARD	This is normal if the test is being done when (a) the circuit pack is not physically in the system or (b) the system is booting up. Otherwise, there is some inconsistency between the physical configuration and the data kept in the system. 1. Verify that the circuit pack is physically in the system. 2. Verify that the system is not in a stage of booting up. 3. Retry the command at 1-minute intervals for a maximum of 5 times.

Error Messages from Chapter 8: Maintenance Commands

A

busyout access-endpoint

Help Messages

If the user presses HELP after entering “busyout access-endpoint,” the following message appears:

```
Enter assigned extension
```

Error Messages

If the format for the extension is incorrect, the following error message is displayed:

```
Extension invalid
```

If the EPN on which the access endpoint resides is not accessible, the following message appears:

```
EPN is not available
```

If the extension is not administered, the following message appears:

```
Extension not assigned
```

If the object associated with the specified extension is not an access endpoint, the following message appears:

```
Extension assigned to object other than access-endpoint
```

If the board that contains the access endpoint is not inserted in the system, the following message appears:

```
Board not inserted
```

If the command entered is in conflict with another currently executing command, then a message appears showing the login id of the conflicting user and the conflicting command. The message is as follows:

```
'login id':'command' has a command conflict
```

If during the execution of a command a resource problem occurs that requires the user to restart the command, then the following message appears:

```
Command resources busy; Press CANCEL to clear, and then resubmit
```

If all of the available maintenance resources are currently in use, then the following message appears:

```
All maintenance resources busy; try again later
```

busyout board

This command will busyout each maintenance object on the specified board.

Help Messages

If the system technician presses HELP after entering “busyout board,” the following message appears:

```
Enter 5 character board number
```

Error Messages

If the format of the board location is incorrect, the following error message appears:

```
Port/Board invalid
```

If the EPN on which the board resides is not available, the following message appears:

```
EPN is not available
```

If a board is not inserted in the specified location, the following message appears:

```
Board not assigned
```

If the specified board does not have any maintenance objects associated with it, the following message appears:

```
No MO in this board
```

If the specified board is part of the DCS link, the board cannot be busied out unless the link itself is busied out first. If the DCS link is not busied out, the following message appears:

```
Must first busyout SCI link
```

If the specified board is an EI board and it is part of the active link, the following message appears:

```
Illegal Command for active object; use 'set' to switch to standby
```

If a busyout is attempted on an invalid board in the service slot, the following message appears:

```
Board invalid
```

If the command entered is in conflict with another currently executing command, then a message appears showing the login id of the conflicting user and the conflicting command. The message is as follows:

```
'login id':'command' has a command conflict
```

If during the execution of a command a resource problem occurs that requires the user to restart the command, then the following message appears:

```
Command resources busy; Press CANCEL to clear, and then resubmit
```

If all of the available maintenance resources are currently in use, then the following message appears:

```
All maintenance resources busy; try again later
```

busyout cdr-link

This command will busyout a maintenance object associated with the specified call detail recording (cdr)-link.

Help Messages

If the system technician presses HELP after entering “busyout cdr-link,” the following message appears:

```
primary     secondary
```

Error Messages

If the command entered is in conflict with another currently executing command, then a message appears showing the login id of the conflicting user and the conflicting command. The message is as follows:

```
'login id':'command' has a command conflict
```

If during the execution of a command a resource problem occurs that requires the user to restart the command, then the following message appears:

```
Command resources busy; Press CANCEL to clear, and then resubmit
```

If all of the available maintenance resources are currently in use, then the following message appears:

```
All maintenance resources busy; try again later
```

busyout data-module

This command will busyout a system technician specified data module or data channel.

Help Messages

If the system technician presses HELP after entering “busyout data-module,” the following message appears:

```
Enter assigned extension
```

Error Messages

If the length or format of the extension is incorrect, the following error message appears:

```
Extension invalid
```

If the specified extension is not administered, then the following message appears:

```
Extension not assigned
```

If the specified extension is not a data module or a data channel, then the following message appears:

```
Extension exists but assigned to a different object
```

If the EPN that contains the data module port is not available, the following message appears:

```
EPN is not available
```

If the board containing the data module port is part of the SCI link, the following message appears:

```
Cannot busyout/release part of SCI link
```

If the command entered is in conflict with another currently executing command, then a message appears showing the login id of the conflicting user and the conflicting command. The message is as follows:

```
'login id':'command' has a command conflict
```

If during the execution of a command a resource problem occurs that requires the user to restart the command, then the following message appears:

```
Command resources busy; Press CANCEL to clear, and then resubmit
```

If all of the available maintenance resources are currently in use, then the following message appears:

```
All maintenance resources busy; try again later
```

busyout journal-printer

This command will busyout a maintenance object associated with the system technician specified pms-log or wakeup-log.

Help Messages

If the system technician presses HELP after entering “busyout journal-printer,” the following object command word choices appears:

```
pms-log          wakeup-log
```

If the command entered is in conflict with another currently executing command, then a message appears showing the login id of the conflicting user and the conflicting command. The message is as follows:

```
’login id’:’command’ has a command conflict
```

If during the execution of a command a resource problem occurs that requires the user to restart the command, then the following message appears:

```
Command resources busy; Press CANCEL to clear, and then resubmit
```

If all of the available maintenance resources are currently in use, then the following message appears:

```
All maintenance resources busy; try again later
```

Error Message

```
Link not administered not enabled
```

busyout link

Help Messages

If the system technician presses HELP after entering “busyout link,” the following message appears:

```
Enter 1 character link number
```

Error Messages

If the link identifier is not valid, the following error message appears:

```
Link out of range, please press HELP
```

If the link is not administered, the following error message appears:

```
Link not administered or not enabled
```

If the command entered is in conflict with another currently executing command, then a message appears showing the login id of the conflicting user and the conflicting command. The message is as follows:

```
'login id':'command' has a command conflict
```

If during the execution of a command a resource problem occurs that requires the user to restart the command, then the following message appears:

```
Command resources busy; Press CANCEL to clear, and then resubmit
```

If all of the available maintenance resources are currently in use, then the following message appears:

```
All maintenance resources busy; try again later
```

busyout mis

This will busyout a specified management information system.

Help Messages

If the system technician presses HELP after entering “busyout mis” the following message appears:

```
Entry is not required
```

Error Messages

If the command entered is in conflict with another currently executing command, then a message appears showing the login id of the conflicting user and the conflicting command. The message is as follows:

```
'login id':'command' has a command conflict
```

If during the execution of a command a resource problem occurs that requires the user to restart the command, then the following message appears:

```
Command resources busy; Press CANCEL to clear, and then resubmit
```

If all of the available maintenance resources are currently in use, then the following message appears:

```
All maintenance resources busy; try again later
```

busyout modem-pool

This command will allow all members of a modem pool group to be busied out.

Help Messages

If the system technician presses HELP after entering “busyout modem-pool” the following message appears:

```
Enter assigned group number between 1-5
 Or press CANCEL to cancel the command
```

Error Messages

If the “busyout modem-pool” command is entered from a login for which the command is not valid, then the following message appears:

```
“busyout” is an invalid entry; please press HELP
```

If the group or member numbers entered are not in a valid format, the following message appears:

```
Identifier invalid
```

If the group number entered is not within the range of groups or the member number is not within the member range, then the following message appears:

```
Boards not assigned
```

If the specific group or member are not administered, then the following message appears:

```
Group not assigned, or group assigned but with no member
```

If a software fault is encountered while the command is executing, the following message appears:

```
Error encountered, can’t complete request
```

If the command entered is in conflict with another currently executing command, then a message appears showing the login id of the conflicting user and the conflicting command. The message is as follows:

```
’login id’:’command’ has a command conflict
```

If during the execution of a command a resource problem occurs that requires the user to restart the command, then the following message appears:

```
Command resources busy; Press CANCEL to clear, and then resubmit
```

If all of the available maintenance resources are currently in use, then the following message appears:

```
All maintenance resources busy; try again later
```

busyout packet-control

Help Messages

If the system technician presses HELP after entering “busyout packet-control,” the following message appears:

```
Enter Packet Control location: [cabinet(1)];carrier(A-B)
```

Error Messages

If this command is entered for a packet-control that resides on the stand-by control complex of a duplicated system, the following message appears:

```
Command only applies to the active Packet Control
```

If during the execution of a command a resource problem occurs that requires the user to restart the command, then the following message appears:

```
Command resources busy; Press CANCEL to clear, and then resubmit
```

If all of the available maintenance resources are currently in use, then the following message appears:

```
All maintenance resources busy; try again later
```

busyout pms-link

Help Messages

If the system technician presses HELP after entering “busyout pms-link” the following message appears:

```
Entry is not required
```

Error Messages

If the command entered is in conflict with another currently executing command, then a message appears showing the login id of the conflicting user and the conflicting command. The message is as follows:

```
'login id':'command' has a command conflict
```

If during the execution of a command a resource problem occurs that requires the user to restart the command, then the following message appears:

```
Command resources busy; Press CANCEL to clear, and then resubmit
```

If all of the available maintenance resources are currently in use, then the following message appears:

```
All maintenance resources busy; try again later
```

busyout port

Help Messages

If the system technician presses HELP after entering “busyout port,” the following message appears:

```
Enter 7 character port number
```

Error Messages

If the format of the port location is incorrect, the following error message appears:

```
Port/Board invalid
```

If the EPN on which the port resides is unavailable, the following message appears:

```
EPN is not available
```

If the board on which the port resides is not administered, the following error message appears:

```
Port not assigned
```

If the board on which the port resides is part of the SCI link, the following error message appears:

```
Cannot busyout/release part of SCI link
```

If the port is translated within a Wideband Access Endpoint, the following error message appears:

```
Port within wideband access endpt; Use busyout access-endpoint <ext> instead
```

If the command entered is in conflict with another currently executing command, then a message appears showing the login id of the conflicting user and the conflicting command. The message is as follows:

```
'login id':'command' has a command conflict
```

If during the execution of a command a resource problem occurs that requires the user to restart the command, then the following message appears:

```
Command resources busy; Press CANCEL to clear, and then resubmit
```

If all of the available maintenance resources are currently in use, then the following message appears:

```
All maintenance resources busy; try again later
```

busyout pri-endpoint

Help Messages

If the user presses HELP after entering “busyout pri-endpoint,” the following message appears:

```
Enter assigned extension
```

Error Messages

If the format for the extension is incorrect, the following error message appears:

```
Extension invalid
```

If the EPN on which the PRI endpoint resides is not accessible, the following message appears:

```
EPN is not available
```

If the extension is not administered, the following message appears:

```
Extension not assigned
```

If the object associated with the specified extension is not a PRI endpoint, the following message appears:

```
Extension assigned to object other than pri-endpoint
```

If the board that contains the PRI endpoint is not inserted in the system, the following message appears:

```
Board not inserted
```

If the command entered is in conflict with another currently executing command, then a message appears showing the login id of the conflicting user and the conflicting command. The message is as follows:

```
'login id':'command' has a command conflict
```

If during the execution of a command a resource problem occurs that requires the user to restart the command, then the following message appears:

```
Command resources busy; Press CANCEL to clear, and then resubmit
```

If all of the available maintenance resources are currently in use, then the following message appears:

```
All maintenance resources busy; try again later
```

busyout sp-link

Help Messages

If the system technician presses HELP after entering “busyout sp-link,” the following appears:

```
Entry is not required
```

Error Messages

If the system printer link is not administered, the following message appears:

```
Link not administered or not enabled
```

If during the execution of a command a resource problem occurs that requires the user to restart the command, then the following message appears:

```
Command resources busy; Press CANCEL to clear, and then resubmit
```

If all of the available maintenance resources are currently in use, then the following message appears:

```
All maintenance resources busy; try again later
```

busyout spe-standby

Help Messages

If the system technician presses HELP after entering “busyout spe-standby” the following message appears:

```
Entry is not required
```

Error Messages

If the command entered is in conflict with another currently executing command, then a message appears showing the login id of the conflicting user and the conflicting command. The message is as follows:

```
'login id':'command' has a command conflict
```

If this command is issued while an **upgrade software** command is active the following message appears:

```
Standby SPE upgrade in progress, command denied
```

busyout station

Help Messages

If the system technician presses HELP after entering “busyout station,” the following message appears:

```
Enter extension for an assigned station
```

Error Messages

If the format of the extension is incorrect, the following error message appears:

```
Extension invalid
```

If the specified extension is not administered, then the following message appears:

```
Extension not assigned
```

If the specified extension does not belong to a station or attendant console, the following message appears:

```
Extension exists but assigned to a different object
```

If the station port resides on an EPN that is unavailable, the following message appears:

```
EPN is not available
```

If the station port resides on a board that is not inserted in the system, the following message appears:

```
Board not assigned
```

If the station port resides on a board that is part of the SCI link, the following message appears:

```
Cannot busyout/release part of SCI link
```

If the command entered is in conflict with another currently executing command, then a message appears showing the login id of the conflicting user and the conflicting command. The message is as follows:

```
'login id':'command' has a command conflict
```

If during the execution of a command a resource problem occurs that requires the user to restart the command, then the following message appears:

```
Command resources busy; Press CANCEL to clear, and then resubmit
```

If all of the available maintenance resources are currently in use, then the following message appears:

```
All maintenance resources busy; try again later
```

busyout tdm

Help Messages

If the system technician presses HELP after entering “busyout tdm,” the following message appears:

```
Enter TDM bus location: [network(1-3)];carrier(A-B)
```

Error Messages

If the technician does not enter a port network number followed by bus, the following message appears:

```
Identifier invalid
```

If the port network on which the desired TDM bus resides is unavailable, the following message appears:

```
EPN is not available
```

If the command entered is in conflict with another currently executing command, then a message appears showing the login id of the conflicting user and the conflicting command. The message is as follows:

```
'login id':'command' has a command conflict
```

If during the execution of a command a resource problem occurs that requires the user to restart the command, then the following message appears:

```
Command resources busy; Press CANCEL to clear, and then resubmit
```

If all of the available maintenance resources are currently in use, then the following message appears:

```
All maintenance resources busy; try again later
```

busyout tone-clock

Help Messages

If the system technician presses HELP after entering “busyout tone-clock,” the following message appears:

```
Enter tone/clock location: [cabinet(1-3];(carrier(A-E))
```

Error Messages

If an identifier greater than 3 (three) characters is entered, or the cabinet entered is not a digit (number), the following message appears:

```
Identifier invalid
```

If the carrier entered is invalid, the following message appears:

```
Invalid carrier specified
```

If the cabinet entered is not within the valid range of cabinets or the cabinet is not administered, the following message appears:

```
Cabinet number not assigned
```

If there is no tone/clock board at the specified location, one of the following messages appears:

```
Board not inserted
Board not assigned
```

If the specified cabinet carrier location is that of a switch node, the following message appears:

```
Switch Node carrier specified; invalid command for SN carrier
```

If the cabinet carrier location entered is that of an EPN that is not available, the following message appears:

```
EPN is not available
```

If the tone/clock is active and the specified action is busyout, the following message appears:

```
Illegal Command for active object; use 'set' to switch to standby
```

If the command entered is in conflict with another currently executing command, then a message appears showing the login id of the conflicting user and the conflicting command. The message is as follows:

```
'login id':'command' has a command conflict
```

If during the execution of a command a resource problem occurs that requires the user to restart the command, then the following message appears:

```
Command resources busy; Press CANCEL to clear, and then resubmit
```

If all of the available maintenance resources are currently in use, then the following message appears:

```
All maintenance resources busy; try again later
```

busyout trunk

Help Messages

If the system technician presses HELP after entering “busyout trunk,” the following message appears:

```
Enter assigned trunk group number [or group/member]
```

Error Messages

If the format of the identifier is invalid, the following message appears:

```
Format invalid
```

If the range of the trunk group is incorrect, the following error message appears:

```
Trunk or trunk group invalid
```

If the specified trunk group is not administered or has no members, the following message appears:

```
Group not assigned, or group assigned but with no member
```

If the specified member is not administered, the following message appears:

```
Group member not assigned
```

If the specified trunk group is part of the SCI link, the following message appears:

```
Cannot busyout/release part of SCI link
```

If the command entered is in conflict with another currently executing command, then a message appears showing the login id of the conflicting user and the conflicting command. The message is as follows:

```
'login id':'command' has a command conflict
```

If during the execution of a command a resource problem occurs that requires the user to restart the command, then the following message appears:

```
Command resources busy; Press CANCEL to clear, and then resubmit
```

If all of the available maintenance resources are currently in use, then the following message appears:

```
All maintenance resources busy; try again later
```

cancel hardware-group

Help Messages

If the system technician presses help after entering “cancel hardware-group” the following message appears:

```
Entry is not required
```

Error Messages

If there is no “test hardware-group” command currently active to be canceled, the following message appears:

```
Command aborted - no hardware-group test in progress
```

If the command entered is in conflict with another currently executing command, then a message appears showing the login id of the conflicting user and the conflicting command. The message is as follows:

```
'login id':'command' has a command conflict
```

change circuit-packs

Help Messages

If the system technician presses HELP after entering “change circuit-packs” the following message appears:

```
Enter number between [1-3]
```

Error Messages

If the command entered is in conflict with another currently executing command, then a message appears showing the login id of the conflicting user and the conflicting command. The message is as follows:

```
'login id':'command' has a command conflict
```

If during the execution of a command a resource problem occurs that requires the user to restart the command, then the following message appears:

```
Command resources busy; Press CANCEL to clear, and then resubmit
```

If an invalid cabinet number is entered on the command line the following message appears:

```
"n" Identifier not assigned
```

change synchronization

Help Messages

If the user presses HELP after entering “change synchronization” the following message appears:

```
Entry is not required
```

Error Messages

If the command entered is in conflict with another currently executing command, then a message appears showing the login id of the conflicting user and the conflicting command. The message is as follows:

```
'login id':'command' has a command conflict.
```

change system-parameters maintenance

This command specifies and displays scheduled maintenance operations and maintenance support functions. It also activates and deactivates INADS alarm origination during repairs. To deactivate alarm origination:

1. Make a note of the current entries in the Alarm Origination and CPE Alarm fields so you can restore them later.
2. Change the `Alarm Origination to OSS Numbers` field to **neither**.
3. Change the `CPE Alarm Activation Level` field to **none**.
4. If daily scheduled maintenance must remain idle during a maintenance procedure, set the `Start Time` field to a time after the session ends. If daily Scheduled Maintenance is running and needs to be deactivated, set the `Stop Time` field to one minute after the current time.
5. Press Enter and verify that the screen displays the message:

   ```
   Command successfully completed
   ```

   NOTE:
   For earlier releases of system software, disable Cleared Alarm Notification and Restart Notification before submitting the form.

   NOTE:
   When finished working on the switch be sure to return all fields to their original settings.

Action/Object	Qualifier	Qualifier Description	Permissions	Defaults	Feature Interactions
change system-parameters maintenance		Examples: **change system-parameters maintenance**	init inads craft cust rcust	none	none

Output (Page One)

The following output example shows a display of *Page 1* of the **change system-parameters maintenance** command.

```
change system-parameters maintenance                                Page   1 of 3
                   MAINTENANCE-RELATED SYSTEM PARAMETERS

OPERATIONS SUPPORT PARAMETERS
            Product Identification: 1000000000
        First OSS Telephone Number: 5551212           Abbrev Alarm Report? y
       Second OSS Telephone Number: 5551213           Abbrev Alarm Report? n
  Alarm Origination to OSS Numbers: both
        Cleared Alarm Notification? y                Suspension Threshold: 5_
              Restart Notification? y
           Test Remote Access Port? n
        CPE Alarm Activation Level: none
              Packet Bus Activated? n
     Customer Access to INADS Port? n
       Repeat Dial Interval (mins): 7

SCHEDULED MAINTENANCE
                  Start Time: 22: 00                     Stop Time: 04: 00
           Daily Maintenance: daily               Save Translation: daily
                                           Command Time-out (hours): 2
 Control Channel Interchange: no          System Clocks Interchange: no
             SPE Interchange: no               EXP-LINK Interchange: no
```

Field Descriptions (Page One)

Operations Support Parameters

`Product Identification` Identifies switch to an Operations Support System (OSS): 10-digit number starting with 1.

`First OSS Telephone Number` Switch reports alarms first to the First OSS telephone number (for example, INADS or Trouble Tracker). The number must be obtained from the National Customer Support Center (NCSC) or the TSC. (**#** and ***** are not allowed in the telephone number.)

`Abbrev Alarm Report` Enables the Abbreviated Alarm Report feature for the first OSS. (**yes**)

`Second OSS Telephone Number`

The switch reports alarms secondly to the second OSS telephone number. For example, INADS or DEFINITY SNMP. The number must be obtained from the National Customer Support Center (NCSC) or the TSC. (**#** and ***** are not allowed in the telephone number.)

`Abbrev Alarm Report`

Enables the Abbreviated Alarm Report feature for the second OSS. (**no**)

`Alarm Origination to OSS Numbers`

Indicates one of four options for alarm origination (**neither**):

`both` = Major and Minor alarms result in an automatic call to both administered OSS telephone numbers.

`first-only` = Major and Minor alarms result in an automatic call to the first administered OSS number.

`neither` = alarm origination does not occur; reports are not sent to either number.

`second no-backup` = Major and Minor alarms result in an automatic call to the first administered OSS telephone number. If calling the first OSS telephone number fails four times, the switch calls the second administered OSS telephone number until calling the first OSS telephone number is successful.

If Alarm Origination is deactivated, Cleared Alarm Notification and Restart Notification deactivate, even though they may still be activate in the administration.

`Cleared Alarm Notification`

The switch originates calls to the OSS and sends an alarm resolution message once all previously-reported Major and Minor alarms are resolved. Activate Alarm Origination to enable Cleared Alarm Notification. (**no**)

`Restart Notification`

Enables the switch to originate calls to the OSS and report any system restarts caused by switch problems. Activate Alarm Origination to enable Restart Notification.

`Suspension Threshold`

Some problems cause alarms to be generated and resolved repeatedly. To detect these problems, the switch suspends Cleared Alarm Notification when it has reported the specified number of Cleared Alarm notifications in a 24 hour period. A suspended Cleared Alarm Notification reactivates with a successfully-completed “logoff” command, a system reset, or when the threshold is changed. This field is irrelevant if `Cleared Alarm Notification` or `Alarm Origination` are disabled. (1–15)

`Test Remote Access Port`

Indicates if remote access testing on the SYSAM circuit pack is active. This field should be set to **yes** when an INADS line is connected to the switch and a maintenance contract is in effect to maintain alarm origination capability.

If no equipment is connected to the remote access port, or if a trunk for remote access and alarm origination is not provided, running tests on the remote access port on the SYSAM results in test failures. This causes unnecessary maintenance alarms and allows potentially destructive tests to be run. To prevent this, set this field to **no**.

`CPE Alarm Activation Level`

Indicates the minimum level (Major, Minor or Warning) to activate Customer-Provided Equipment (CPE) alarm. If the level is **none**, the CPE does not activate for any alarm.

NOTE:
When the switch goes into Emergency Transfer, the CPE alarm activates regardless of the CPE Alarm Activation Level setting.

`Packet Bus Activated`

If this field is set to **yes**, maintenance software assumes that a Packet Control circuit pack is installed. If packet endpoints (for example, ASAI, and/or BRI) are administered, and maintenance testing runs on both the Packet Control circuit pack and Packet Bus, set this field to **yes** after a packet control circuit pack is installed. If a Packet Control circuit pack is not installed in the system, a major alarm is raised against the PKT-CTRL MO.

Change this field to **no** if no packet endpoints are administered, to ensure that no packet endpoints can be administered if the packet bus deactivated.

If a Packet Control circuit pack is not installed, then this field should be set to **no** (the only exception is system translations that do not have all required hardware).

`Customer Access to INADS Port`

To prevent customer login ID access to system administration and maintenance interface control, set this field to **no**. Avaya services has sole access to this field.

`Repeat Dial Interval (MMS)`

Number of minutes that the system must wait before attempting another call origination to an OSS. Lack of a far-end acknowledgment triggers the timer.

Scheduled Maintenance

`Start Time`

Hour and minute (24-hour notation) when daily scheduled maintenance starts

`Stop Time`

The hour and minute when scheduled daily maintenance ceases. If any daily maintenance operations are not completed by this time, the system notes its stopped sequence location and includes those operations during the next scheduled daily maintenance.

`Daily Maintenance`

This display-only field lists the standard test series run by maintenance software during daily maintenance.

`Save Translation`

Indicates days that translation data in memory automatically saves to the Mass Storage System disk and/or tape devices during scheduled maintenance. The operation saves to disk, then completes a backup to tape. Translation data saves to both SPEs, if systems have duplicated SPEs. (daily, days of the week, or no - prevents automatic saves)

`Control Channel Interchange`

Each port network has a pair of TDM busses (A and B). Each has a set of time slots dedicated to the control channel. One bus at a time carries the control channel in each PN. (daily, days of the week, or no - prevents interchanges). (**no**)

`System Clocks Interchange`

For High and Critical Reliability systems, this option initiates a Tone-Clock interchange in each port network possessing duplicated Tone-Clock circuit packs. Each port network interchanges into the standby Tone-Clock for 20 seconds and then back to the originally-active Tone-Clock. This field indicates the days that interchanges occur. (daily, days of the week, or no). “No” prevents interchanges. (**no**)

The system performs a Tone-Clock interchange, activating the stand by Tone-Clock. After the newly-active Tone-Clock circuit pack is tested, it provides system clocks for its native port network. Then the system interchanges to the originally active Tone-Clock circuit pack.

`SPE Interchange`

This field indicates the days SPE interchanges execute during scheduled maintenance, for duplicated SPE systems. (daily, days of the week, or no). **No** prevents scheduled interchanges. (**no**)

`EXP-LINK Interchange`

This field indicates if expansion links between port-networks interchange as part of scheduled maintenance. The value **daily** means that EXP-LINK interchanges automatically occur everyday. The value **no** means that EXP-LINK interchanges do not automatically occur as part of scheduled maintenance. Values represented by the days of the week mean that EXP-LINK interchanges automatically occur automatically on specified days. Since EXP-LINK interchanges apply to duplicated systems, simplex systems do not display this field. (**no**)

Output (Page Two)

The following example shows the output from *page 2* of the **change system-parameters maintenance** command.

```
change system-parameters maintenance                    Page 2 of 3

                   MAINTENANCE-RELATED SYSTEM PARAMETERS

MINIMUM MAINTENANCE THRESHOLDS ( Before Notification )
      TTRs: 4       CPTRs: 2       Call Classifier Ports: _
      MMIs: 0         VCs: 0

TERMINATING TRUNK TRANSMISSION TEST (Extension)
  Test Type 100:        Test Type 102:         Test Type 105:

ISDN MAINTENANCE
   ISDN-PRI TEST CALL Extension: _____   ISDN BRI Service SPID: _____

DS1 MAINTENANCE
   DSO Loop-Around Test Call Extension: ____

 SPE OPTIONAL BOARDS
    Packet Intf1? y      Packet Intf2? n     Packet Intf3? n
 Bus Bridge:____  Inter-Board Link Timeslots  Pt0:_  Pt1:_  Pt2:_
```

Field Descriptions (Page Two)

Minimum Maintenance Thresholds (Before Notification)

`TTRs`

When the number of touch tone receivers (TTRs) in service falls below this number (4 to 200), a WARNING alarm is raised against TTR-LEV. These are also known as dual-tone multifrequency receivers (DTMRs). There are 4 TTRs on each TN748, TN718, TN420, or TN756; TN2182 and TN744 (suffix C or later) each have 8 TTRs. To alarm the first occurrence of a TTR being taken out of service, set this field to the total number of TTRs in the switch.

`CPTRs`

When the number of call progress tone receivers in service falls below this number (2 to 100), a WARNING alarm is raised against TTR-LEV. These are also known as general purpose tone detectors (GPTDs). There are 2 CPTRs on each TN748, TN718, TN420, or TN756; TN2182 and TN744 (suffix C or later) each have 8 CPTRs. To alarm the first occurrence of a CPTR being taken out of service, set this field to the total number of CPTRs in the switch.

`Call Classifier Ports`

When the number of call classifier ports (CLSFY-PTs) in service falls below this number, a WARNING alarm is raised against TTR-LEV. Valid entries are 1 to 200. There are 8 ports on each TN744 or TN2182 circuit pack. To alarm the first occurrence of a CLSFY-PT being taken out of service, set this field to the total number of CLSFY-PTs. If there are no TN744 or TN2182 circuit packs in the system, leave this field blank.

`MMIs`

The MMIs field contains the minimum number of MMI ports needed for the Multimedia Call Handling (MMCH) feature to run efficiently. The MMCH feature must be enabled on the System-Parameters Customer-Options form before the MMIs field can be changed to a number greater than zero. If the number of in-service Multimedia Interface (MMI) ports falls below the minimum port capacity (valid entries between 0-128), a MMI-LEV error is logged. Each MMI circuit pack contains a maximum of 32 ports. To alarm the first occurrence of an MMI being taken out of service, set this field to the total number of MMI ports. If this outage continues for 15 minutes, a MAJOR alarm is raised.

`VCs`

The VCs field contains the minimum number of VC ports needed for the Multimedia Call Handling (MMCH) feature. The MMCH feature must be enabled on the System-Parameters Customer-Options form before the VCs field can be changed to a number greater than 0. Each VC circuit pack contains 16 physical ports: 8 ports are reserved for VC-DSPPT ports, and the remaining 8 ports are designated as VC-SUMPT ports. The 8 DSP ports are made up of 4 encoder and 4 decoder resources that encode and decode audio formats. Thus, *one VC circuit pack is required for every 8 ports of MMCH port capacity*. If the number of in-service VC ports falls below the MMCH port capacity (valid entries between 0 and 128), a VEC-LEV error is logged. To alarm the first occurrence of a VC port being taken out of service, set this field to the total number of VC ports. If this outage continues for 15 minutes a MAJOR alarm is raised.

Terminating Trunk Transmission Test (Extension)

`Test Type 100`

This field specifies extensions assigned to receive tie-trunk calls from other switches that have test line origination capability. The system responds by sending a sequence of test tones. Test Type 100 tests far end to near end loss and C-message by sending:

- 5.5 seconds of 1004 Hz tone at 0 dB
- Quiet until disconnect; disconnect is forced after one minute

`Test Type 102`

Test Type 102 tests far end to near end loss by sending:

- 9 seconds of 1004 Hz tone at 0 dB
- 1 second of quiet
- This cycle is repeated until disconnect; disconnect is forced after 24 hours.

`Test Type 105`

Test Type 105 tests 2-way loss, gain slope, and C-message and C-notch noise by sending:

- nine seconds of 1004 Hz at -16 dB
- one second of quiet
- nine seconds of 404 Hz at -16 dB
- one second of quiet
- nine seconds of 2804 Hz at -16 dB
- 30 seconds of quiet
- one-half second of Test Progress Tone (2225 Hz)
- approximately five seconds of quiet
- forced disconnect

ISDN Maintenance

`ISDN-PRI Test Call Extension`

This field indicates the extension used by far-end ISDN nodes to place calls to the system, for testing ISDN-PRI trunks between the far-end and the system.

`ISDN-BRI Service SPID`

This field shows if the link associates with the Service SPID. If the link is associated with the Service SPID. This number is the test SPID (0 – 99999) (under BRI-SET MO). Otherwise, this field is blank. Service SPID is a feature used by the system technician to check building wiring between the switch and the BRI endpoint.

DS1 Maintenance

`DSO Loop-Around Test Call Extension`

The extension used to set up a DSO loop around connection for testing non-ISDN DS1 trunks. The DSO Loop-Around Test Call feature is used primarily for testing DSO channels associated with non ISDN-PRI trunks. The loop-around is activated by dialing the test extension number; multiple DSO Loop-Around connections can be established by placing multiple calls to the loop-around extension.

SPE Optional Boards

`Packet Intfl?`

These fields indicate if a Disk circuit pack is present, and identify administered Packet Interface slots. If a Packet Interface circuit pack is present, the corresponding Packet Interface field is set to **y** when the system boots. No change to that field is allowed. If the system is equipped with duplicated SPEs, the `Packet Interface` field is set to **y** if either SPE carrier contains a Packet Interface circuit pack in the corresponding position. If a Packet Interface circuit pack is not present, the value for the `Packet Interface` field is read from translation data, and stored on disk or tape. If the field is set to **n**, a Packet Interface circuit pack may be administered by changing the corresponding `Packet Interface` field to **y**.

This field identifies the presence of `Packet Interface 1` (always set to **y** for csi and si models).

`Packet Intf2?`

This field identifies the presence of `Packet Interface 2` (always set to **y** for the si model). It is changeable for the csi model. If set to **y** for the csi model, the `Bus Bridge` and `Inter-Board Link Timeslots` fields display. Default is **n**.

`Packet Intf3?`

This field identifies the presence of `Packet Interface 3` (Unavailable in the si and csi models). It is changeable in the r model. Default is **n**.

`Bus Bridge`

(If `Packet Intf2` set to **y**) This field gives the location of the C-LAN circuit pack performing the bus bridge functionality when the packet bus is activated. Enter the 5-character circuit pack number (CCcss, where CC = cabinet number 1-3, c = carrier A-E, ss = slot number 0-20). Default is blank.

`Inter-Board Link Timeslot Pt0`

The number of timeslots to be used for port 0 on the Inter-Board Link. Displays only if the switch model type is csi and the `Packet Intf2` field is **y**. Enter the number of timeslots (**1**-**9**) to be used by this Inter-Board Link port. Default is **6**.

`Inter-Board Link Timeslot Pt1`

The number of timeslots to be used for port 1 on the Inter-Board Link. Displays only if switch model type is csi and the `Packet Intf2` field is **y**. Enter the number of timeslots (**1**-**3**) to be used by this Inter-Board Link port. Default is **1**.

`Inter-Board Link Timeslot Pt2`

The number of timeslots to be used for port 2 on the Inter-Board Link. Displays only if switch model type is csi and the `Packet Intf2` field is **y**. Enter the number of timeslots (**1**-**3**) to be used by this Inter-Board Link port. Default is **1**.

Output (Page Three)

The following example shows the output from *page 3* of the **change system-parameters maintenance** command.

```
   change system-parameters maintenance           Page 3 of 3

           MAINTENANCE-RELATED SYSTEM PARAMETERS

        Modem Connection: external
               Data Bits: 8
                  Parity: none

             Modem Name: _______

         RTS/CTS Enabled: \Q3      Auto Answer Ring Count (rings): S0=10
  Asynchronous Data Mode: &M0&Q0                        Dial Type: T
     DTE Auto-Data Speed: ______      Adjustable Make/Break Ratio:
Disable Data Compression: ______                     Dial Command: D
    Enable Error Control: ______               No Answer Time-out: S7=255
       Misc. Init. Param: ______________



Help/Error Message Line
```

Field descriptions (Page Three)

Modem Connection

On page 3 of the example forms, 11 fields disappear when the `Modem Connection?` field is set to **internal**. In this example the `Modem Connection` field is set to **external**, revealing the 11 fields.

The first 2 fields on page 3 establish the data format for transmitting serial data from the switch to the modem. The two valid combinations for these 2 fields are:

- Data Bits = 8, Parity = None
- Data Bits = 7, Parity = (odd, even, mark, or space)

`Modem Connection`	Valid entries are `internal` (default) or `external`.
`Modem Name`	This field is 20 characters long and will permit alpha-numeric characters to provide a unique qualifier for a given modem. ( )
`RTS/CTS Enabled`	This field will inform the modem that communication with the data source UART will be driven with RTS/CTS flow control. This field is 6 characters long and is case in-sensitive. (\Q3)

Asynchronous Data Mode	This field will configure the modem as an asynchronous communications device. This field is 8 characters long and is case in-sensitive. (&M0&Q0)
DTE Auto-Data Speed	This option will adjust the speed of the data source (DTE) UART to the outgoing (modem-to-modem) data rate. So, at maximum this speed would be 9600 baud. This field is 6 characters long and is case in-sensitive. Note that this field sets the link speed between the switch and the modem. It does not set the speed of the modem. It is not desirable to have the serial data fill the modem buffer faster than the outgoing data rate especially because data compression is disabled. ( )
Disable Data Compression	This field will turn off the default data compression algorithms that are in use by most consumer modems. This field is 6 characters long and is case in-sensitive. ( )
Enable Error Control	This field will turn on the V.42 LAPM and MNP error control protocols, if available on the modem. This field is 6 characters long and is case in-sensitive. This V.42/MNP/Buffer mode first attempts to negotiate V.42 error control with the remote modem. If this fails, then the modem transitions to MNP, and if this fails then no error control is used. ( )
Misc. Init. Param	This field supports any initialization parameters that are not already specified. The AT commands specified in this free-form field will be always the last initialization parameters to be sent to the external modem. This field is 20 characters long and is case in-sensitive. ( )
Auto-Answer Ring Count	This field controls the number of rings required before the modem automatically answers an incoming call, if and only if the switch doesn't answer first. (If the switch is healthy, it answers an incoming within the first few rings.) This field is 6 characters long and is case insensitive. Typically, the maximum permissible value for this register is 255. The values 1-255 denote the number of incoming ring cycles. (S0=10) **NOTE:** The number of rings is optimally set above 5, and if at all possible, keep the default of S0=10.
Dial Type	This field controls the type of inter-register signaling to be used between the modem and the Central Office. Use "T" for tone dialing and "P" for pulse dialing. The field length is be 3 characters long and is case in-sensitive. This field will be concatenated with the dial string. (T)
Adjustable Make/Break Ratio	This field can be of particular importance when using a modem that may be transferable from country to country. The intent of this field is to control the make/break ratios of pulses and DTMF dialing. The Intel product information has support for the different make/break options for pulse dialing only. Intel uses the option "&P0" to select a ratio of 39% make and 61% break for communication within the U.S. and Canada. The option "&P1" sets a ration of 33% make and 67% break for the U.K. and Hong Kong. This field is 5 characters long and is case in-sensitive. ( )
Dial Command	This field simply denotes the dialing command of the modem. This is a fairly standard command. (D)

`No Answer Time-Out`	Most off-the-shelf external modems provide a timer that abandons any outbound data call after a predetermined interval. Some modems provide for this timer to be disabled, thus allowing an outbound call to ring indefinitely. AT&T Paradyne does not provide this capability with their modem line, because it is generally undesirable to have an outbound call attempt ring indefinitely. The internal modem must have this parameter disabled or set to at least 255 seconds. This is a non-administrable parameter. For the external modem connection, this parameter will be the first initialization string to be transmitted to the external modem. This field will be visible on the administration form in display mode only. This hardcoded constant can be overridden for type approval applications, specifically in the U.K and other Western European nations, by the use of the “Misc. Init. Param:” field. (S7=255)

clear audits

Help Messages

If the technician presses HELP after entering “clear audits” the following message appears:

```
peak-hour    cumulative
```

Error Messages

If during the execution of a command a resource problem occurs that requires the user to restart the command, then the following message appears:

```
Command resources busy; Press CANCEL to clear, and then resubmit
```

If all of the available maintenance resources are currently in use, then the following message appears:

```
All maintenance resources busy; try again later
```

clear errors

Help Messages

If the system technician presses HELP after entering “clear errors,” the following message appears:

```
Entry is not required
```

Error Messages

If the command entered is in conflict with another currently executing command, then a message appears showing the login id of the conflicting user and the conflicting command. The message is as follows:

```
'login id':'command' has a command conflict
```

If during the execution of a command a resource problem occurs that requires the user to restart the command, then the following message appears:

```
Command resources busy; Press CANCEL to clear, and then resubmit
```

If all of the available maintenance resources are currently in use, then the following message appears:

```
All maintenance resources busy; try again later
```

clear interface

Help Messages

If HELP is pressed after entering “clear interface,” the following message appears:

```
Enter location: [cabinet(1)], carrier(A-B), pos(1-2)
```

Error Messages

If the specified carrier is not the active PE, the following message appears:

```
Command must be executed from active SPE
```

If the cabinet and carrier is invalid for a PPN, the following message appears:

```
Invalid port-network specified
```

If the carrier is not a valid carrier, the following message appears:

```
Invalid carrier specified
```

If the technician-entered carrier is not active, the following message appears:

```
Board invalid
```

If there is not a PI circuit pack administered for the specified position, but the specified carrier is active, the following error message appears:

```
Processor Interface (TN765) not started or is being started
```

If the command entered is in conflict with another currently executing command, then a message appears showing the login id of the conflicting user and the conflicting command. The message is as follows:

```
'login id':'command' has a command conflict
```

If, during the execution of a command, a resource problem occurs that requires the user to restart the command, then the following message appears:

```
Command resources busy; Press CANCEL to clear, and then resubmit
```

If all of the available maintenance resources are currently in use, then the following message appears:

```
All maintenance resources busy; try again later
```

clear isdn-testcall

Help Messages

If the system technician presses HELP after entering “clear isdn-testcall,” the following appears:

```
Enter group #/member #
```

Error Messages

If the specified format of the trunk location is incorrect, this message displays:

```
Format invalid
```

If the specified trunk group or member range is invalid, this message displays:

```
Trunk or trunk group invalid
```

If a trunk group and member is not specified, this message displays:

```
Must specify group/member pair
```

If the specified trunk group is not administered or has no members administered, this message displays:

```
Group not assigned, or group assigned but with no member
```

If the specified trunk group member is not administered, this message displays:

```
Group member not assigned
```

If the board on which the port resides is not administered, this message displays:

```
Port not assigned
```

If a test call is currently not in progress when the command is entered, this message displays:

```
Test Call not in progress
```

If the specified trunk is not an ISDN-PRI trunk, this message displays:

```
Invalid non ISDN-PRI trunk specified
```

If the test call has already completed, the following message appears:

```
Test Call already terminated
```

If, during the execution of a command, a resource problem occurs that requires the user to restart the command, this message displays:

```
Command resources busy; Press CANCEL to clear, and then resubmit
```

If all available maintenance resources are in use, this message displays:

```
All maintenance resources busy; try again later
```

Output

If the clear isdn-testcall command is successful, this message displays:

```
Command successfully completed
```

If the clear isdn-testcall command is unsuccessful, this message displays:

```
Error encountered, can't complete request
```

clear link

Help Messages

If the system technician presses HELP after entering "clear link," the following message appears:

```
Enter 1 character link number
```

Error Messages

If the link identifier is not within the valid range, the following error message appears:

```
Link out of range, please press HELP
```

If the link is not administered, the following error message appears:

```
Link not administered or not enabled
```

If the command entered is in conflict with another currently executing command, then a message appears showing the login id of the conflicting user and the conflicting command. The message is as follows:

```
'login id':'command' has a command conflict
```

If during the execution of a command a resource problem occurs that requires the user to restart the command, then the following message appears:

```
Command resources busy; Press CANCEL to clear, and then resubmit
```

If all of the available maintenance resources are currently in use, then the following message appears:

```
All maintenance resources busy; try again later
```

clear mst

Help Messages

If HELP is pressed after entering “clear mst,” the following message appears:

```
Entry is not required
```

Error Messages

If the command entered is in conflict with another currently executing command, then a message appears showing the login id of the conflicting user and the conflicting command. A conflict could occur if another user was executing an enable, disable or clear message sequence trace command at the same time. The message is as follows:

```
'login id':'command' has a command conflict
```

clear pkt

Help Messages

If the technician presses HELP after entering “clear pkt,” this message displays:

```
Enter port-network; port network number (1-3)
```

Error Messages

If the packet bus is not administered, this message displays:

```
Packet Bus is not activated, check system-parameters maintenance form
```

If all available maintenance resources are in use, this message displays:

```
All maintenance resources busy; try again later
```

clear port

Help Messages

If the system technician presses HELP after entering “clear port,” the following message appears:

```
Enter 7 character port number
```

Error Messages

If the port is not administered, the following error message appears:

```
Port not marked
```

If the command entered is in conflict with another currently executing command, then a message appears showing the login id of the conflicting user and the conflicting command. The message is as follows:

```
'login id':'command' has a command conflict
```

If during the execution of a command a resource problem occurs that requires the user to restart the command, then the following message appears:

```
Command resources busy; Press CANCEL to clear, and then resubmit
```

If all of the available maintenance resources are currently in use, then the following message appears:

```
All maintenance resources busy; try again later
```

copy update-file

Help Messages

If the system technician presses HELP after entering “copy update-file” on a duplex SPE system the following message appears:

```
['override']
```

Error Messages

If the standby SPE contains a newer patch file than the active SPE and the override option was NOT used, the following message appears:

```
Active SPE's update file is older than standby's
```

If the vintage of the standby SPE doesn’t match the vintage of the active SPE, the following message appears:

```
Update file vintage does not match standby SPE core vintage
```

If there is no update file on active processor, the following message appears:

```
No update file on tape
```

If the standby SPE is NOT in standby mode, the following message appears:

```
Cannot access the standby SPE at this time
```

If the active SPE cannot establish a communication path to the standby SPE, the following message appears:

```
Could not establish netcon data call between SPE's
```

If the command entered is in conflict with another currently executing command, then a message appears showing the login id of the conflicting user and the conflicting command. The message is as follows:

```
'login id':'command' has a command conflict
```

If the update file is too large to fit on device, the following message appears:

```
Update file is too large to fit on device
```

If the checksum of the files is not correct, the following message appears:

```
Update file checksum failed
```

If the update is successful the following message appears:

```
Command completed successfully
```

disable administered-connection

Help Messages

If the user presses HELP after entering “disable administered-connection,” the following message appears:

```
Enter assigned administered connection number(1-128) or 'all'
```

Error Messages

If the administered connection number entered is not “all” and is non numeric, the following message appears:

```
Identifier invalid
```

If the administered connection number entered is not within the valid range of connections, the following message appears:

```
Entry out of range
```

If the connection number entered is not administered, the following message appears:

```
Identifier not assigned
```

If the administered connection number entered is already disabled, the following message appears:

```
Administered connection already disabled
```

If the software data cannot be sent to the SAT, the following message appears:

```
Error encountered, can't complete request
```

If the command entered is in conflict with another currently executing command, then a message appears showing the login id of the conflicting user and the conflicting command. The message is as follows:

```
'login id':'command' has a command conflict
```

If during the execution of a command a resource problem occurs that requires the user to restart the command, then the following message appears:

```
Command resources busy; Press CANCEL to clear, and then resubmit
```

disable mst

Help Messages

If the user presses HELP after entering “disable mst,” the following message displays:

```
Entry is not required
```

Error Messages

If the command entered is in conflict with another currently executing command, then a message appears showing the login id of the conflicting user and the conflicting command. The message is as follows:

```
'login id':'command' has a command conflict
```

disable suspend-alm-orig

Help Messages

N is the maximum number of cabinets in the switch:

```
Enter board location:[cabinet(1-N)];
    carrier(A-E);slot(0-20)
```

disable synchronization-switch

Help Messages

If the system technician presses help after entering “disable synchronization” the following message appears:

```
Entry is not required
```

Error Messages

If the command entered is in conflict with another currently executing command, then a message appears showing the login id of the conflicting user and the conflicting command. The message is as follows:

```
'login id':'command' has a command conflict
```

If during the execution of a command a resource problem occurs that requires the user to restart the command, then the following message appears:

```
Command resources busy; Press CANCEL to clear, and then resubmit
```

If all of the available maintenance resources are currently in use, then the following message appears:

```
All maintenance resources busy; try again later
```

disable test-number

Help Messages

If the system technician presses HELP after entering “disable test-number,” the following message appears:

```
Enter test number
```

Error Messages

If the test-number entered is not a valid system test number, the following error message appears:

```
Test number invalid
```

If the command entered is in conflict with another currently executing command, then a message appears showing the login id of the conflicting user and the conflicting command. The message is as follows:

```
'login id':'command' has a command conflict
```

If during the execution of a command a resource problem occurs that requires the user to restart the command, then the following message appears:

```
Command resources busy; Press CANCEL to clear, and then resubmit
```

If all of the available maintenance resources are currently in use, then the following message appears:

```
All maintenance resources busy; try again later
```

display alarms

Help Messages

If the technician presses HELP after entering “display alarms” the following message appears:

```
['print' or 'schedule']
```

Error Messages

If during the execution of a command a resource problem occurs that requires the user to restart the command, then the following message appears:

```
Command resources busy; Press CANCEL to clear, and then resubmit
```

If all of the available maintenance resources are currently in use, then the following message appears:

```
All maintenance resources busy; try again later
```

Field Help

Following are the help messages that the system technician will see upon tabbing to the specified field and pressing the HELP key.

Active?	"n(o) y(es)"
Resolved?	"n(o) y(es)"
Major?	"n(o) y(es)"
Minor?	"n(o) y(es)"
Warning?	"n(o) y(es)"
Interval:	The interval field help is a list of objects. This list includes m(onth), h(our), d(ay), w(eek), a(ll).
	"From (month) "Enter month between 1-12"
From (day)	"Enter day between 0-31"
From (hour)	"Enter hour between 0-23"
From (minute)	"Enter minute between 0-59"
To (month)	"Enter month between 1-12"
To (day)	"Enter day between 0-31"
To (hour)	"Enter hour between 0-23"
To (minute)	"Enter minute between 0-59"
Cabinet:	"Enter cabinet number (1-3)"
Port Network:	"Enter port network number (1-3)"

Board Number:	"Enter 5 character board number; cabinet(01-3):carrier(A-E):slot(00-20)"
Port:	"Enter port number; [cabinet(1-3)]:carrier(A-E):slot(0-20):circuit(01-31)"
Category:	The category field help is a list of objects. This list includes the following: adm-conn, announce, bri/asai, card-mem, cdr, data-mod, detector, dup-spe, environ, exp-intf, ext-dev, generatr, inads-link, infc, maint, mbus, memory, misc, mnt-test, modem, netcon, pkt, pkt-ctrl pms/jrnl, procr, quick-st s-syn, stabd, stacrk, stations, sys-prnt, tape, tdm, tone, trkbd, trkcrk, trunk, wideband. For a table describing the category entries in greater detail, see the ‘‘display errors’’ command.
Extension:	“Enter assigned extension”
Trunk (group)	"Enter group number between 1-99"
Trunk (member)	"Enter group member between 1-99, or blank"

Field Error Messages

Following are the error messages that appears on the screen. The messages are displayed when the system technician tabs out of a field and the validation routines are executed. In the following messages, an “x” represents the character that was entered by the user.

Active?	""x" is an invalid entry; please press HELP"
Resolved?	""x" is an invalid entry; please press HELP"
Major?	""x" is an invalid entry; please press HELP"
Minor?	""x" is an invalid entry; please press HELP"
Warning?	""x" is an invalid entry; please press HELP"
Interval:	""x" is an invalid entry; please press HELP"
From (month)	"Entry must be all digits"
From (day)	"Entry must be all digits"
From (hour)	"Entry must be all digits"
From (minute)	"Entry must be all digits"
To (month)	"Entry must be all digits"
To (day)	"Entry must be all digits"
To (hour)	"Entry must be all digits"
To (minute)	"Entry must be all digits"
Cabinet:	"Entry invalid"
Port Network:	"Entry invalid"
Board Number:	"Board invalid"
Port:	"Port invalid"

Category:	“”xxxxxxxx” is an invalid entry; please press HELP”
Extension:	"Entry must be all digits"
Trunk (group)	"Entry must be all digits"
Trunk (member)	"Entry must be all digits"

display errors

Help Messages

If the technician presses HELP after entering “display errors” the following message appears:

```
['high-resolution'], ['print' or 'schedule']
```

Error Messages

If the software data cannot be sent to the SAT, the following message appears:

```
Error encountered, can't complete request
```

If during the execution of a command a resource problem occurs that requires the user to restart the command, then the following message appears:

```
Command resources busy; Press CANCEL to clear, and then resubmit
```

If all of the available maintenance resources are currently in use, then the following message appears:

```
All maintenance resources busy; try again later
```

Field Help

Following are the help messages that the system technician will see upon tabbing to the specified field and pressing the HELP key.

Error Type:	"Enter error type"
Error List:	The Error List field help provides the following help list: active-alarms, errors, cleared-errors.
Interval:	The interval field help provides the following help list: h(our), d(ay), w(eek), m(onth), a(ll).
From (month)	"Enter month between 1-12"
From (day)	"Enter day between 0-31"
From (hour)	"Enter hour between 0-23"
From (minute)	"Enter minute between 0-59"
To (month)	"Enter month between 1-12"
To (day)	"Enter day between 0-31"

To (hour)	"Enter hour between 0-23"
To (minute)	"Enter minute between 0-59"
Cabinet:	"Enter cabinet number (1-3)"
Port Network:	"Enter port network number (1-3)"
Board Number:	"Enter 5 character board number; cabinet(1-3):carrier(A-E):slot(0-20)"
Port:	"Enter port number; [cabinet(1-3)]:carrier(A-E):slot(0-20):circuit(01-31)"
Category:	The category field help is a list of objects. This list includes the following: adm-conn, announce, bri/asai, cdr, data-mod, detector, dup-spe, environ, exp-intf, ext-dev, generatr, inads-link, infc, maint, mbus, memory, misc, mnt-test, modem, netcon, pkt, pkt-ctrl pms/jrnl, procr, quick-st s-syn, stabd, stacrk, stations, sys-prnt, tape, tdm, tone, trkbd, trkcrk, trunks. This list pertains only to help messages.

Category	Maintenance Objects
adm-conn	ADM-CONN
announce	ANN-PT, ANN-BD
bri/asai	BRI-BD, BRI-PORT, ABRI-PORT, BRI-SET, ASAI-ADJ
card-mem	CARD-MEM, CAP-MEM, FL-DATA
cdr	CDR-LNK
data-mod	PDMODULE, TDMODULE, DT-LN-BD, DAT-LINE, DDP-PDM, DDP-TDM, BRI-DAT
detector	DTMR-PT, GPTD-PT, DETR-BD, TONE-BD
dup-spe	DUPINT, SHDW-CIR, SHDW-LINK, SPE-SELEC, STBY-SPE, TAPE, PROCR, MEM-BD, SW-CTL, CARR-POW, PR-MAINT, PI-BD, DATA-CHL, DATA-CON, DATA-BD, PKT-CTRL, CAP-MEM, PI-PT
environ	POWER, AC-POWER, CARR-POW, EMG-XFER, CABINET, DC-POWER, EXT-DEV, RING-GEN
exp-intf	TDM-CLK, TONE-BD, TONE-BD, SYNC, EXP-INTF, EXP-INTF, EXP-LINK, CARR-POW, AC-POWER, DC-POWER, MAINT, DUPINT, EPN-SNTY
ext-dev	CUST-ALM, EXT-DEV
generatr	TONE-PT, TONE-BD, TONE-BD, TDM-CLK, SYNC, STRAT-3
inads-link	INADS
infc	PI-LINK, PI-SCI, PI-BD, PI-PT, EXP-INTF, EXP-INTF, EXP-LINK, ISDN-LNK, PKT-CTRL, IDSN-SGRP, PGATE-BD, X25-PT
maint	MAINT, PR_MAINT
mbus	PROCR, MEM_BD, PR_MAINT, TAPE, DATA-BD, SW-CTL, DUPINT, PI-BD, PKT-CTRL
memory	MEM_BD
misc	TIME-DAY, ERR-LOG, MIS, PROC-SAN, SYSTEM, CONFIG

Category	Maintenance Objects
mnt-test	M/T-DIG, M/T-PKT, M/T-BD
modem	MODEM-PT, MODEM-BD
netcon	SW-CTL, DATA-CHL, DATA-BD, DATA-CON
pkt	PKT-BUS, PKT-CTRL M/T-PKT
pkt-ctrl	PKT-CTRL
pms/jrnl	PMS-LINK, JRNL-LNK
procr	PROCR, PR_MAINT
quick-st	MO_AN_STA, MO_DIG_STA, MO_SCS_STA, MO_PD_MODULE, MO_TD_ MODULE, MO_51D_TRM, MO_DTDM, MO_DL_PT, MO_16_PT, MO_AN2_STA, MO_ANN_PT, MO_PDT_PT, MO_PDG_STA, MO_BRI_PT, MO_BRI_EPT, MO_ BRI_VUSR, MO_BRI_DUSR, MO_ASAI, MO_DS_CO, MO_CO_TRK, MO_DS_DID, MO_DID_TRK, MO_DS_TIE, MO_TIE_TRK, MO_DSPRI_TRK, MO_DS_OPS, MO_ ANNOUNCE, MO_SN_PT, MO_TDMCLK, MO_LPRI, MO_ABRI_PT, MO_ASAI_ EPT, MO_ADX_PT, MO_X25_PT, MO_AUX_TRK, MO_TT_DET, MO_CPT_DET, MO_TGEN_BD, MO_PMOD, MO_CLAS_PT, MO_TGEN_BD, MO_LPMS, MO_ LJOURNAL, MO_LCDR, MO_PMSPRNT, MO_JNLPRNT, MO_PRICDR, MO_ SECCDR, MO_LSP, MO_EI_BD, MO_TDMBUS, MO_EPN_MB, MO_PACKET, MO_EPN_SANITY, MO_PROCESSOR, MO_MEMORY, MO_SYSAM, MO_ ARCHA, MO_MSSNET, MO_TAPE, MO_DISK, MO_SYSTEM, MO_TTR_LEV, MO_SYS_CONFIG, MO_CTONE_BD, MO_PNI_BD, MO_PACCON, MO_EAA, MO_LINK
s-syn	S-SYN-PT, S-SYN-BD
stabd	ANL-LINE, ANL-NE-LINE, DIG-LINE, AUDIX-PT, DDP-D-PT, HYB-LINE, MET-LINE, ANL-16-LINE, BRI-PORT, ABRI-PORT, DDP-B-PT, DDP-A-PT, BRI-SET, ASAI-ADJ, DDP-BSET, DDP-ASAI, ANL-BD, ANL-BD, DIG-BD, AUDIX-BD, NMI-BD, HYB-BD, MET-BD, ANL-BD, BRI-BD
stacrk	ANL-LINE, ANL-NE-LINE, DIG-LINE, AUDIX-PT, DDP-D-PT, HYB-LINE, MET-LINE, ANL-16-LINE, OPS-LINE
stations	ANL-LINE, ANL-NE-LINE, DIG-LINE, AUDIX-PT, DDP-D-PT, HYB-LINE, MET-LINE, ANL-16-LINE, OPS-LINE, BRI-PORT, ABRI-PORT, DDP-B-PT, DDP-A-PT, BRI-SET, ASAI-ADJ, DDP-BSET, DDP-ASAI
sys-prnt	SYS-PRNT
tape	TAPE, TAPE-DATA, PR-MAINT
tdm	SW-CTL, TDM-BUS
tone	TONE-PT, TONE-BD, TDM-CLK, SYNC, STRAT-3, TONE-BD, DTMR-PT, GPTD-PT, DETR-BD, TTR-LEV, CLSFY-BD, CLSFY-PT
trkbd	CO-TRK, DID-TRK, AUX-TRK, TIE-TRK, TIE-DS1, CO-DS1, DID-DS1, ISDN-TRK, CO-BD, DID-BD, AUX-BD, TIE-BD, DS1-BD, DS1-BD, UDS1-BD

Category	Maintenance Objects
trkcrk	CO-TRK, DID-TRK, AUX-TRK, TIE-TRK, TIE-DS1, CO-DS1, DID-DS1, IDSN-TRK, ISDN-LNK
trunks	CO-TRK, DID-TRK, AUX-TRK, TIE-TRK, TIE-DS1, CO-DS1, DID-DS1, ISDN-TRK, ISDN-LNK, PE-BCHL, WAE-PORT
wide-band	PE-BCHL, WAE-PORT

Extension:	"Enter assigned extension"
Trunk (group)	"Enter group number between 1-99"
Trunk (member)	"Enter group member between 1-99, or blank"

Field Error Messages

Following are the error messages that appears on the screen. The messages are displayed when the system technician tabs out of a field and the validation routines are executed. In the following messages, an “x” or “xxxxxxxx” represents the characters that were entered by the user.

Interval:	""x" is an invalid entry; please press HELP key"
Error Type:	"Entry must be all digits"
From (month)	"Entry must be all digits"
From (day)	"Entry must be all digits"
From (hour)	"Entry must be all digits"
From (minute)	"Entry must be all digits"
To (month)	"Entry must be all digits"
To (day)	"Entry must be all digits"
To (hour)	"Entry must be all digits"
To (minute)	"Entry must be all digits"
Cabinet	"Cabinet invalid"
Port Network Number:	"Port Network invalid"
Board Number:	"Board invalid"
Port:	"Port invalid"
Category:	“”xxxxxxxx” is an invalid entry; please press HELP”
Extension:	"Entry must be all digits"
Trunk (group)	"Entry must be all digits"
Trunk (member)	"Entry must be all digits"

display initcauses

Help Messages

If the system technician presses HELP after entering “display initcauses” the following message appears:

```
['print' or 'schedule']
```

Error Messages

If during the execution of a command a resource problem occurs that requires the user to restart the command, then the following message appears:

```
Command resources busy; Press CANCEL to clear, and then resubmit
```

If all of the available maintenance resources are currently in use, then the following message appears:

```
All maintenance resources busy; try again later
```

display memory-configuration

Help Messages

If the system technician presses help after entering “display memory-configuration” the following message appears:

```
Enter ['long'] ['print' or 'schedule']
```

Error Messages

If “display memory-configuration” is executed, the following error message will appear on the SAT status line:

```
"memory-configuration" is an invalid entry; please press HELP
```

If ““display memory-configuration long” is executed on a simplex system, the following error message will appear on the SAT status line:

```
"long" is an invalid identifier; please press HELP
```

If “display memory-configuration long” is executed when the standby processor is not available, the following message will appear on the SAT status line:

```
Cannot access the standby SPE at this time
```

display port

Help Messages

If the system technician presses help after entering “display port” the following message appears:

```
Enter assigned port, [’print’ or ’schedule’]
```

Error Messages

If the format for the port location is incorrect, the following message appears:

```
Identifier invalid
```

If the port location is not administered, the following message appears:

```
Identifier not assigned
```

If the specified port location is out of range, the following message appears:

```
Port/Board location invalid
```

If during the execution of a command a resource problem occurs that requires the user to restart the command, then the following message appears:

```
Command resources busy; Press CANCEL to clear, and then resubmit
```

display synchronization

Help Messages

If the system technician presses HELP after entering “display time” the following message appears:

```
[’print’ or ’schedule’]
```

Error Messages

If during the execution of a command a resource problem occurs that requires the user to restart the command, then the following message appears:

```
Command resources busy; Press CANCEL to clear, and then resubmit
```

If all of the available maintenance resources are currently in use, then the following message appears:

```
All maintenance resources busy; try again later
```

display system-parameters maintenance

Help Messages

The following help message appears when the system technician presses the help key after entering the **display system-parameters maintenance** command:

```
['Print' or 'schedule']
```

display time

Help Messages

If the system technician presses HELP after entering “display time” the following message appears:

```
['print' or 'schedule']
```

Error Messages

If during the execution of a command a resource problem occurs that requires the user to restart the command, then the following message appears:

```
Command resources busy; Press CANCEL to clear, and then resubmit
```

If all of the available maintenance resources are currently in use, then the following message appears:

```
All maintenance resources busy; try again later
```

download update-file

Help Messages

There is no associated help message as the command has no options.

Error Messages

If the vintage of the standby SPE doesn’t match the vintage of the active SPE, the following message appears:

```
Update file vintage does not match standby SPE core vintage
```

If the patch identifier in the update file does not match the patch identifier in memory, the following message appears:

```
Update file patch identifier does not match SPE patch identifier
```

If an update file which is created for a different system (i.e.,. a patch file is created for a tape system and downloaded to a flash system), the following message appears:

```
Update file designed for a different configuration, file will not be used
```

If the update file is too large to fit in the remaining space, the following message appears:

```
Update file is too large to fit on device
```

If the calculated file checksum is incorrect, the following message appears:

```
File checksum failed; file will not be used
```

If an invalid update file block was found, the following message appears:

```
Found a bad file block; file will not be used
```

If the total number of blocks listed in the header block of the update file did not match the number of blocks received by the SPE, the following message appears:

```
Received an invalid number of blocks; file will be ignored
```

The total number of subpatches listed in the header of the update file did not match the number of subpatches received by the switch

```
Received wrong number of subpatches for update file
```

RECOVERY PROCEDURES

This sections describes the procedures to be followed to recover from failures encountered during the download and application of the update file. The instructions apply to both simplex and duplex switches; additional detail is given when needed.

Error on the Transmission of the Download

If the error displayed on the terminal indicates that the download step in the process failed, there are several culprits:

1. The transmission line could have been noisy. Retry after making all the following checks. Failed attempts take up room in the hard patch file and may require a warm start to clear the file.
2. The user may have downloaded the tape/MIPS version of the patch instead of the flash version.
3. The vintage of the update file may not match the vintage of software currently running in the system. Check the customer’s vintage using “list config software” and patch vintage provided in the documentation.

4. The switch may have had difficulty in writing to the hard patch file. Check the hardware error log for processor/memory board failures.
5. The hard patch file may be full. Issue a “reset system 1". This should cause valid files to be applied and invalid ones to be erased.

Error on Application of the Patch

A patch may not have been applied for the following reasons:

1. The memory card was write-protected. Remove this protection and issue a **reset system x** command
2. The patch identifiers were inconsistent. Run **list configuration software** and compare the old_patch identifier with the values in the update file.
3. The LMM encountered a problem with the patch file. This is unlikely because the same checks, and more, were performed when the file was downloaded, prior to marking the file valid. This implies that the memory which stored the update file was corrupted. Apply the back out file immediately to back out the changes. Run the flash checksum test to make sure the system is back to its prepatch state. Check the validity of the file again with the development community and then try redownloading and applying the patch immediately.
4. The LMM reports a hard error. The symptoms of this is an entry in the hardware error log for the processor/memory board, if you’re lucky, or extremely odd switch behavior followed by SPE down mode if you’re not. The problem is that the LMM couldn’t complete the programming of memory with the result that memory is in a corrupted state. The only recovery is to visit the site armed with new software and processor/memory circuit packs.

   In a High or Critical Reliability System, the failure causes a switch to the standby processor. The hardware on the standby must be repaired and the patch redownloaded. (There was nothing wrong with the patch)

Good Application - Bad Patch

This error is caused, not by a failure in the download or application, but by a fault in the patch file itself. To recover from this type of problem, the back out file which backs out the patch should be downloaded and applied. Clearly, this requires that the system be sane enough to receive the file correctly and be able to apply it.

In a High or Critical Reliability System, the user has about eight minutes to recognize that a problem exists and force an interchange to the standby processor. If this can be done, the file on the newly active processor can be invalidated using a file containing a destroy tuple or the *wp byte* command. The standby can be restored to a normal state using the back out file.

Inconsistent Software Versions on a Duplicated Switch

Inconsistent software, as indicated by a failure in the data consistency test, can be caused by problems copying the update file to the standby or validation test failures on the standby. Unlike the tape or MIPS systems which revert to the same version of software as a result of a refresh, a flash system remains inconsistent until manually initiated steps are taken. Use the *list config software* command to determine the status of the vintages, patch identifiers and patch file data on both the active and standby processor.

1. If one processor looks as if it has been patched (updated patch identifier and no update file) and the other looks as if the patch file is still present (no patch identifier and valid update file), the application of the patch can be forced by making that processor active and requesting the system restart indicated in the accompanying documentation.
2. If one processor has a copy of the update file and the other doesn't (neither has been patched), the file can be copied using the command *copy update-file*.
3. If patch identifiers disagree but neither side has a valid update file, the missing patch should be redownloaded to the system. During the download process the file will pass the vintage test and be copied to the standby processor. Validation tests will then be run on both machines. On the next restart, the patch will be applied to memory. This procedure is less disruptive to the customer if the unpatched processor is the standby at the time of the restart.

enable administered-connection

Help Messages

If the user presses HELP after entering "enable administered-connection", the following message appears:

```
Enter assigned administered connection number(1-128) or 'all'
```

Error Messages

If the administered connection number entered is not "all" and is non numeric, the following message appears:

```
Identifier invalid
```

If the administered connection number entered is not within the valid range of connections, the following message appears:

```
Entry out of range
```

If the connection number entered is not administered, the following message appears:

```
Identifier not assigned
```

If the administered connection number entered is already enabled, the following message appears:

```
Administered connection already enabled
```

If the software data cannot be sent to the SAT, the following message appears:

```
Error encountered, can't complete request
```

If the command entered is in conflict with another currently executing command, then a message appears showing the login id of the conflicting user and the conflicting command. The message is as follows:

```
'login id':'command' has a command conflict
```

If during the execution of a command a resource problem occurs that requires the user to restart the command, then the following message appears:

```
Command resources busy; Press CANCEL to clear and then resubmit
```

enable mst

Help Messages

If you press Help after entering "enable mst", the following message displays:

```
Entry is not required
```

Error Messages

If the command conflicts with another currently executing command, a message displays the login ID of the conflicting user and the conflicting command.

```
'login id':'command' has a command conflict
```

enable suspend-alm-orig

Help Messages

```
Enter board or port location,
['off-board-only'], expires-in-hrs(1-72)
```

enable synchronization-switch

Help Messages

If the system technician presses help after entering “enable synchronization-switch” the following message appears:

```
Entry is not required
```

Error Messages

If the command entered is in conflict with another currently executing command, then a message appears showing the login id of the conflicting user and the conflicting command. The message is as follows:

```
'login id':'command' has a command conflict
```

If during the execution of a command a resource problem occurs that requires the user to restart the command, then the following message appears:

```
Command resources busy; Press CANCEL to clear, and then resubmit
```

If all of the available maintenance resources are currently in use, then the following message appears:

```
All maintenance resources busy; try again later
```

enable test-number

Help Messages

If the system technician presses help after entering “enable test-number” the following message appears:

```
Enter test number
```

Error Messages

If the command entered is in conflict with another currently executing command, then a message appears showing the login id of the conflicting user and the conflicting command. The message is as follows:

```
'login':'command' has a command conflict
```

If during the execution of a command a resource problem occurs that requires the user to restart the command, then the following message appears:

```
Command resources busy; Press CANCEL to clear, and then resubmit
```

If all of the available maintenance resources are currently in use, then the following message appears:

```
All maintenance resources busy
```

get vector

Help Messages

If the system technician presses help after entering “get vector” the following message appears:

```
['long'], ['print']
```

Error Messages

If a list configuration command is still executing while the “get vector” command is entered, the following message appears:

```
Still clearing previously canceled command; please try later
```

If during the execution of a command a resource problem occurs that requires the user to restart the command, the following message appears:

```
Command resources busy; Press CANCEL to clear, and then resubmit
```

If all of the available maintenance resources are currently in use, the following message appears:

```
All maintenance resources busy; try again later
```

list disabled-mos

Help Messages

If the system technician presses help after entering “list disabled-MOs” the following message appears:

```
['print' or 'schedule']
```

Error Messages

If during the execution of a command a resource problem occurs that requires the user to restart the command, then the following message appears:

```
Command resources busy; Press CANCEL to clear, and then resubmit
```

If all of the available maintenance resources are currently in use, then the following message appears:

```
All maintenance resources busy, try again later
```

list history

Help Messages

If the system technician presses HELP after entering “list history”, the following message appears:

```
['print' or 'schedule']
```

Error Messages

None.

list isdn-testcall

Help Messages

If the system technician presses help after entering “list isdn-testcall” the following message appears:

```
['print' or 'schedule']
```

Error Messages

If the software data cannot be sent to the SAT, the following message appears:

```
Error encountered, can't complete request.
```

If during the execution of a command a resource problem occurs that requires the user to restart the command, then the following message appears:

```
Command resources busy; Press CANCEL to clear, and then resubmit
```

If all of the available maintenance resources are currently in use, then the following message appears:

```
All maintenance resources busy
```

list marked-ports

Help Messages

If the system technician presses help after entering “list marked-ports” the following message appears:

```
['print' or 'schedule']
```

Error Messages

If during the execution of a command a resource problem occurs that requires the user to restart the command, then the following message appears:

```
Command resources busy; Press CANCEL to clear, and then resubmit
```

If all of the available maintenance resources are currently in use, then the following message appears:

```
All maintenance resources busy, try again later
```

list measurements

Help Messages

If the system technician presses HELP after entering “list measurements ds1”, the following list of options appears:

```
log      summary
```

If the system technician presses HELP after entering “list measurements ds1 log” or “list measurements ds1 summary”, the following message appears:

```
Enter board location: [cabinet(1-3)];carrier(A-E);slot(00-20),
['print' or 'schedule']
```

Error Messages

If the user enters an invalid format for a board location when entering a “list measurements ds1 log” or “list measurements ds1 summary” command, the following error message appears:

```
"entered value" Invalid slot address for DS1 board
```

If the user enters a board location that is not a DS1 board location or the location of an unadministered DS1 when entering a “list measurements ds1 log” or “list measurements ds1 summary” command, the following error message appears:

```
DS1 board has not been administered
```

If the user enters anything other than “log” or “summary” following “list measurements ds1”, the following error message appears:

```
"entered value" is an invalid entry; please press HELP
```

If the system time has not been set correctly, after entering “list measurements ds1 log ds1_location” or “list measurements ds1 summary ds1_location” the following error message appears:

```
Cannot get time from system clock
```

list mst

Help Messages

If the user presses HELP after entering “list mst” the following message appears:

```
Enter [ ’from’ 0-32767 ] [ ’count’ 1-9998 ]
   [ ’fifo’ or ’lifo’ or ’continuous’ ]
 [ ’auto-page’ ] [ ’print’ or ’schedule’ ]
```

Error Messages

If the command entered is in conflict with another currently executing command, then a message appears showing the login id of the conflicting user and the conflicting command. The message is as follows:

```
’login id’:’command’ has a command conflict
```

If during the execution of a command a resource problem occurs that requires the user to restart the command, then the following message appears:

```
Command resources busy; Press CANCEL to clear, and then resubmit
```

If all of the available maintenance resources are currently in use, then the following message appears:

```
All maintenance resources busy; try again later
```

list suspend-alm-orig

Help Messages

```
[‘print’ or ‘help’]
```

list testcalls

Help Messages

If the system technician presses HELP after entering “list testcalls”, the following message appears:

```
Please enter one of the following object command words:
                detail          summary
         Or press CANCEL to cancel the command
```

If the system technician presses HELP after entering “list testcalls detail”, the following message appears:

```
Enter [[’grp’ x],[’to-grp’ x],[’mem’ x],[’to-mem’ x] or [’port’ x]],
[[’result’ x] or [’not-result’ x]],[’count’ x],[’print’ or ’schedule’]
```

If the system technician presses HELP after entering “list testcalls summary”, the following message appears:

```
Enter [['grp' x],['to-grp' x],[['count' x],
        ['print'] or ['schedule']
```

Error Messages

If there are no records in the measurements database, the following message appears:

```
No data in the system to list
```

If an invalid identifier is entered, the following message appears:

```
“identifier” is an invalid entry; please press HELP
```

If an invalid count identifier is entered, the following message appears:

```
“identifier” is an invalid identifier; press RETURN to execute modified
                                    command
```

If an invalid port location or unadministered port location is entered, the following message appears:

```
“identifier” Identifier invalid
```

If the user entered trunk group number or the trunk group member number is not within a valid range, the following message appears:

```
Entry out of range
```

If the user entered trunk group number or the trunk group member number is not administered, or the user entered result is not found, the following message appears:

```
No records match the specified query options
```

mark port

Help Messages

If the system technician presses help after entering “mark port” the following message appears:

```
Enter 7 character port number
```

Error Messages

If during the execution of a command a resource problem occurs that requires the user to restart the command, then the following message appears:

```
Command resources busy; Press CANCEL to clear, and then resubmit
```

If all of the available maintenance resources are currently in use, then the following message appears:

```
All maintenance resources busy, try again later
```

monitor bcms

Help Messages

If the system technician presses HELP after entering “monitor bcms”, the following object command word choices appears:

```
Please enter one of the following object command words:
          skill         split          system
        Or press CANCEL to cancel the command
```

If the system technician presses HELP after entering “monitor bcms system” the following message appears:

```
Enter [measured split numbers separated by one space
 and/or split range in the format xx-xx], ['print']
        Or press CANCEL to cancel the command
```

If the system technician presses HELP after entering command “monitor bcms split” or “monitor bcms skill” the following message appears:

```
Enter a measured split or skill number(1-99), ['print']
        Or press CANCEL to cancel the command
```

Error Messages

If the split or skill number entered is non numeric, not administered, or invalid in any other way, the following message appears:

```
Invalid split number
```

If the split or skill number entered is not measured by BCMS or only measured externally, the following message appears:

```
Split is not measured by Basic Call Management System (BCMS)
```

If during the execution of a command a resource problem occurs that requires the user to restart the command, then the following message appears:

```
Command resources busy; Press CANCEL to clear, and then resubmit
```

If all of the available maintenance resources are currently in use, then the following message appears:

```
All maintenance resources busy; try again later
```

monitor health

Help Messages

If the system technician presses HELP after entering “monitor health” the following message appears:

```
Entry is not required
```

Error Messages

If during the execution of a command a resource problem occurs that requires the user to restart the command, then the following message appears:

```
Command resources busy; Press CANCEL to clear, and then resubmit
```

If all of the available maintenance resources are currently in use, then the following message appears:

```
All maintenance resources busy; try again later
```

Help Messages

If the system technician presses HELP after entering “monitor security-violations”, the following message appears:

```
['print']
```

Error Messages

If during the execution of a command a resource problem occurs that requires the user to restart the command, then the following message appears:

```
Command resources busy; Press CANCEL to clear, and then resubmit
```

If all of the available maintenance resources are currently in use, then the following message appears:

```
All maintenance resources busy; try again later
```

monitor system

Help Messages

If the system technician presses HELP after entering “monitor system”, the following object command word choices appears:

```
conn        view1        view2
              scr
```

If the system technician presses HELP after entering “monitor system conn” the following message appears:

```
Enter 3 port network numbers(xx-xx) ['pnn' x x x]
```

Error Messages

If the pnn number entered is non numeric, not administered, or invalid in any other way, one of following messages appears:

```
Object command word omitted; please press HELP
"xx" is an invalid identifier; press RETURN to execute modified command
```

If during the execution of a command a resource problem occurs that requires the user to restart the command, then the following message appears:

```
Command resources busy; Press CANCEL to clear, and then resubmit
```

If all of the available maintenance resources are currently in use, then the following message appears:

```
All maintenance resources busy; try again later
```

monitor traffic

Help Messages

If the system technician presses HELP after entering “monitor traffic”, the following object command word choices appears:

```
hunt-groups        trunk-groups
```

Error Messages

If during the execution of a command a resource problem occurs that requires the user to restart the command, then the following message appears:

```
Command resources busy; Press CANCEL to clear, and then resubmit
```

If all of the available maintenance resources are currently in use, then the following message appears:

```
All maintenance resources busy; try again later
```

monitor trunk

Help Messages

If the system technician presses HELP after entering “monitor trunk”, the following message appears:

```
Enter assigned trunk group(1-99) or [group/member(1-99)]
```

Error Messages

If the format of the trunk identifier is incorrect, the following error message appears:

```
Format invalid
```

If the trunk identifier is not in the valid range, the following error message appears:

```
Trunk or trunk group invalid
```

If the trunk group member is not administered, the following message appears:

```
Group member not assigned
```

If during the execution of a command a resource problem occurs that requires the user to restart the command, then the following message appears:

```
Command resources busy; Press CANCEL to clear, and then resubmit
```

If all of the available maintenance resources are currently in use, then the following message appears:

```
All maintenance resources busy; try again later
```

recycle carrier

Help Messages

If the system technician presses HELP after entering “recycle carrier” on a simplex SPE system, the following message appears:

```
Enter [cabinet(1-3)];carrier(B-E)
```

If the system technician presses HELP after entering “recycle carrier” on a duplex SPE system, the following message appears:

```
For cabinet 1 enter [cabinet(1)];carrier(C-E)
For cabinet 2-3 enter cabinet (2-3);carrier(B-E)
```

Error Messages

If no location is entered, the following message appears:

```
Identifier command word(s) omitted; please press help
```

If a location greater than three characters is entered, the following message appears:

```
Entry invalid
```

If the location entered is longer than 3 characters or less than 1 character the following appears:

```
Invalid carrier specified
```

If the cabinet and carrier specified are in an EPN that is not available, the following message appears:

```
EPN is not available
```

If a cabinet number of “1” or “01” is entered and the carrier specified is “A” or “B” in an SPE duplex system, the carrier specified is “A” in a SPE simplex system or if the “A” carrier is specified with a cabinet other than “1” or “01, or an SCC carrier location is given,” the following message appears:

```
Cannot recycle control carriers or XE carriers
```

If the command entered is in conflict with another currently executing command, then a message appears showing the login id of the conflicting user and the conflicting command. The message is as follows:

```
login id':'command' has a command conflict
```

refresh spe-standby

Help Messages

If the system technician presses HELP after entering “refresh spe-standby,” the following message appears:

```
Entry is not required
```

Error Messages

If the command entered is in conflict with another currently executing command, then a message appears showing the login id of the conflicting user and the conflicting command. The message is as follows:

```
'login id':'command' has a command conflict
```

release access-endpoint

Help Messages

If the user presses HELP after entering “release access-endpoint,” the following message appears:

```
Enter assigned extension
```

Error Messages

If the format for the extension is incorrect, the following error message appears:

```
Extension invalid
```

If the EPN on which the access endpoint resides is not accessible, the following message appears:

```
EPN is not available
```

If the extension is not administered, the following message appears:

```
Extension not assigned
```

If the object associated with the specified extension is not an access endpoint, the following message appears:

```
Extension assigned to object other than access-endpoint
```

If the board that contains the access endpoint is not inserted in the system, the following message appears:

```
Board not inserted
```

If the command entered is in conflict with another currently executing command, then a message appears showing the login id of the conflicting user and the conflicting command. The message is as follows:

```
'login id':'command' has a command conflict
```

If during the execution of a command a resource problem occurs that requires the user to restart the command, then the following message appears:

```
Command resources busy; Press CANCEL to clear, and then
resubmit
```

If all of the available maintenance resources are currently in use, then the following message appears:

```
All maintenance resources busy; try again later
```

release board

Help Messages

If the system technician presses HELP after entering “release board,” the following message appears:

```
Enter 5 character board number
```

Error Messages

If the format of the board location is incorrect, the following error message appears:

```
Port/Board invalid
```

If the EPN on which the board resides is not available, the following message appears:

```
EPN is not available
```

If a board is not inserted in the specified location, the following message appears:

```
Board not assigned
```

If the specified board does not have any maintenance objects associated with it, the following message appears:

```
No MO in this board
```

If the specified board is a EI board and it is part of the active link, the following message appears:

```
Illegal Command for active object; use 'set' to switch to
standby
```

If a reset is attempted on an invalid board in the service slot, the following message appears:

```
Board invalid
```

If the command entered is in conflict with another currently executing command, then a message appears showing the login id of the conflicting user and the conflicting command. The message is as follows:

```
'login id':'command' has a command conflict
```

If during the execution of a command a resource problem occurs that requires the user to restart the command, then the following message appears:

```
Command resources busy; Press CANCEL to clear, and then
resubmit
```

If all of the available maintenance resources are currently in use, then the following message appears:

```
All maintenance resources busy; try again later
```

release cdr-link

Help Messages

If the system technician presses HELP after entering “release cdr-link,” the following message appears:

```
Enter 'primary' or 'secondary'
```

Error Messages

If the cdr-link is not administered, then the following message appears:

```
Link not administered
```

If the command entered is in conflict with another currently executing command, then a message appears showing the login id of the conflicting user and the conflicting command. The message is as follows:

```
'login id':'command' has a command conflict
```

If during the execution of a command a resource problem occurs that requires the user to restart the command, then the following message appears:

```
Command resources busy; Press CANCEL to clear, and then
resubmit
```

If all of the available maintenance resources are currently in use, then the following message appears:

```
All maintenance resources busy; try again later
```

release data-module

Help Messages

If the system technician presses HELP after entering “release data-module,” the following message appears:

```
Enter assigned extension
```

Error Messages

If the length or format of the extension is incorrect, the following error message appears:

```
Extension invalid
```

If the specified extension is not administered, then the following message appears:

```
Extension not assigned
```

If the specified extension is not a data module or a data channel, then the following message appears:

```
Extension exists but assigned to a different object
```

If the EPN that contains the data module port is not available, the following message appears:

```
EPN is not available
```

If the board containing the data module port is part of the SCI link, the following message appears:

```
Cannot busyout/release part of SCI link
```

If the command entered is in conflict with another currently executing command, then a message appears showing the login id of the conflicting user and the conflicting command. The message is as follows:

```
'login id':'command' has a command conflict
```

If during the execution of a command a resource problem occurs that requires the user to restart the command, then the following message appears:

```
Command resources busy; Press CANCEL to clear, and then
resubmit
```

If all of the available maintenance resources are currently in use, then the following message appears:

```
All maintenance resources busy; try again later
```

release journal-printer

Help Messages

If the system technician presses HELP after entering “release journal-printer,” the following object command word choices appears:

```
pms-log     wakeup-log
```

If the command entered is in conflict with another currently executing command, then a message appears showing the login id of the conflicting user and the conflicting command. The message is as follows:

```
'login id':'command' has a command conflict
```

If during the execution of a command a resource problem occurs that requires the user to restart the command, then the following message appears:

```
Command resources busy; Press CANCEL to clear, and then
resubmit
```

If all of the available maintenance resources are currently in use, then the following message appears:

```
All maintenance resources busy; try again later
```

release link

Help Messages

If the system technician presses HELP after entering “release link,” the following message appears:

```
Enter 1 character link number
```

Error Messages

If the link identifier is not valid, the following error message appears:

```
Link out of range, please press HELP
```

If the link is not administered, the following error message appears:

```
Link not administered or not enabled
```

If the command entered is in conflict with another currently executing command, then a message appears showing the login id of the conflicting user and the conflicting command. The message is as follows:

```
'login id':'command' has a command conflict
```

If during the execution of a command a resource problem occurs that requires the user to restart the command, then the following message appears:

```
Command resources busy; Press CANCEL to clear, and then
resubmit
```

If all of the available maintenance resources are currently in use, then the following message appears:

```
All maintenance resources busy; try again later
```

release mis

Help Messages

If the system technician presses HELP after entering “release mis” the following message appears:

```
Entry is not required
```

If the command entered is in conflict with another currently executing command, then a message appears showing the login id of the conflicting user and the conflicting command. The message is as follows:

```
'login id':'command' has a command conflict
```

If during the execution of a command a resource problem occurs that requires the user to restart the command, then the following message appears:

```
Command resources busy; Press CANCEL to clear, and then
resubmit
```

If all of the available maintenance resources are currently in use, then the following message appears:

```
All maintenance resources busy; try again later
```

release modem-pool

Help Messages

If the system technician presses HELP after entering “release modem-pool” the following message appears:

```
Enter assigned group number between 1-5
Or press CANCEL to cancel the command
```

Error Messages

If the “release modem-pool” command is entered from a login for which the command is not valid, then the following message appears:

```
“release” is an invalid entry; please press HELP
```

If the group or member numbers entered are not in a valid format, the following message appears:

```
Identifier invalid
```

If the group number entered is not within the range of groups or the member number is not within the member range, then the following message appears:

```
Boards not assigned
```

If the specific group or member are not administered, then the following message appears:

```
Group not assigned, or group assigned but with no member
```

If a software fault is encountered while the command is executing, the following message appears:

```
Error encountered, can’t complete request
```

If the command entered is in conflict with another currently executing command, then a message appears showing the login id of the conflicting user and the conflicting command. The message is as follows:

```
'login id':'command' has a command conflict
```

If during the execution of a command a resource problem occurs that requires the user to restart the command, then the following message appears:

```
Command resources busy; Press CANCEL to clear, and then
resubmit
```

If all of the available maintenance resources are currently in use, then the following message appears:

```
All maintenance resources busy; try again later
```

release packet-control

Help Messages

If the system technician presses HELP after entering “release packet-control,” the following message appears:

```
Enter Packet Control location: [cabinet(1)];carrier(A-B)
```

Error Messages

If this command is entered for a packet-control that resides on the stand-by control complex of a High or Critical Reliability System, the following message appears:

```
Command only applies to the active Packet Control
```

If during the execution of a command a resource problem occurs that requires the user to restart the command, then the following message appears:

```
Command resources busy; Press CANCEL to clear, and then
resubmit
```

If all of the available maintenance resources are currently in use, then the following message appears:

```
All maintenance resources busy; try again later
```

release pms-link

Help Messages

If you press HELP after entering “release pms-link” the following message displays:

```
Entry is not required
```

If the command entered is in conflict with another currently executing command, then a message displays showing the login ID of the conflicting user and the conflicting command. The message is as follows:

```
'login id':'command' has a command conflict
```

If during the execution of a command a resource problem occurs that requires the user to restart the command, then the following message appears:

```
Command resources busy; Press CANCEL to clear, and then
resubmit
```

If all of the available maintenance resources are currently in use, the following message displays:

```
All maintenance resources busy; try again later
```

release port

Help Messages

If the system technician presses HELP after entering “release port,” the following message appears:

```
Enter 7 character port number
```

Error Messages

If the format of the port location is incorrect, the following error message appears:

```
Port/Board invalid
```

If the EPN on which the port resides is unavailable, the following message appears:

```
EPN is not available
```

If the board on which the port resides is not administered, the following error message appears:

```
Port not assigned
```

If the board on which the port resides is part of the SCI link, the following error message appears:

```
Cannot busyout/release part of SCI link
```

If the port is translated within a Wideband Access Endpoint, the following error message appears:

```
Port within wideband access endpt;
Use busyout access-endpoint <ext> instead
```

If the command entered is in conflict with another currently executing command, then a message appears showing the login id of the conflicting user and the conflicting command. The message is as follows:

```
'login id':'command' has a command conflict
```

If during the execution of a command a resource problem occurs that requires the user to restart the command, then the following message appears:

```
Command resources busy;
Press CANCEL to clear, and then resubmit
```

If all of the available maintenance resources are currently in use, then the following message appears:

```
All maintenance resources busy; try again later
```

release pri-endpoint

Help Messages

If the user presses HELP after entering “release pri-endpoint,” the following message appears:

```
Enter assigned extension
```

Error Messages

If the format for the extension is incorrect, the following error message appears:

```
Extension invalid
```

If the EPN on which the PRI endpoint resides is not accessible, the following message appears:

```
EPN is not available
```

If the extension is not administered, the following message appears:

```
Extension not assigned
```

If the object associated with the specified extension is not a PRI endpoint, the following message appears:

```
Extension assigned to object other than pri-endpoint
```

If the board that contains the PRI endpoint is not inserted in the system, the following message appears:

```
Board not inserted
```

If the command entered is in conflict with another currently executing command, then a message appears showing the login id of the conflicting user and the conflicting command. The message is as follows:

```
'login id':'command' has a command conflict
```

If during the execution of a command a resource problem occurs that requires the user to restart the command, then the following message appears:

```
Command resources busy;
Press CANCEL to clear, and then resubmit
```

If all of the available maintenance resources are currently in use, then the following message appears:

```
All maintenance resources busy; try again later
```

extension 22501 are in cabinet 1, carrier B, slot 20, circuit 1 to 6.

release sp-link

Help Messages

If the system technician presses HELP after entering “release sp-link,” the following appears:

```
Entry is not required
```

Error Messages

If the system printer link is not administered, the following message appears:

```
Link not administered or not enabled
```

If during the execution of a command a resource problem occurs that requires the user to restart the command, then the following message appears:

```
Command resources busy; Press CANCEL to clear, and then
resubmit
```

If all of the available maintenance resources are currently in use, then the following message appears:

```
All maintenance resources busy; try again later
```

release spe-standby

Help Messages

If the system technician presses HELP after entering “release spe-standby” the following message appears:

```
Entry is not required
```

Error Messages

If the command entered is in conflict with another currently executing command, then a message appears showing the login id of the conflicting user and the conflicting command. The message is as follows:

```
'login id':'command' has a command conflict
```

release station

Help Messages

If the system technician presses HELP after entering “release station,” the following message appears:

```
Enter extension for an assigned station
```

Error Messages

If the format of the extension is incorrect, the following error message appears:

```
Extension invalid
```

If the specified extension is not administered, then the following message appears:

```
Extension not assigned
```

If the specified extension does not belong to a station or attendant console, the following message appears:

```
Extension exists but assigned to a different object
```

If the station port resides on an EPN that is unavailable, the following message appears:

```
EPN is not available
```

If the station port resides on a board that is not inserted in the system, the following message appears:

```
Board not assigned
```

If the station port resides on a board that is part of the SCI link, the following message appears:

```
Cannot busyout/release part of SCI link
```

If the command entered is in conflict with another currently executing command, then a message appears showing the login id of the conflicting user and the conflicting command. The message is as follows:

```
'login id':'command' has a command conflict
```

If during the execution of a command a resource problem occurs that requires the user to restart the command, then the following message appears:

```
Command resources busy;
Press CANCEL to clear, and then resubmit
```

If all of the available maintenance resources are currently in use, then the following message appears:

```
All maintenance resources busy; try again later
```

release tdm

Help Messages

If the system technician presses HELP after entering “release tdm,” the following message appears:

```
Enter 'port-network', port network number (1-3),
 'bus', bus ('a' or 'b')
```

Error Messages

If the technician enters “bus” before “port-network,” the following message appears:

```
'bus' is an invalid identifier; please press HELP
```

If the technician does not enter all digits for the port-network number, the following message appears:

```
Entry must be all digits
```

If the technician enters a bus other than A or B, the following message appears:

```
Identifier invalid
```

If the technician enters a TDM bus identifier with a Port Network number that is not administered, the following message appears:

```
Port Network number not assigned
```

If the port network on which the desired TDM bus resides is unavailable, the following message appears:

```
EPN is not available
```

If the command entered is in conflict with another currently executing command, then a message appears showing the login id of the conflicting user and the conflicting command. The message is as follows:

```
'login id':'command' has a command conflict
```

If during the execution of a command a resource problem occurs that requires the user to restart the command, then the following message appears:

```
Command resources busy;
Press CANCEL to clear, and then resubmit
```

If all of the available maintenance resources are currently in use, then the following message appears:

```
All maintenance resources busy; try again later
```

release tone-clock

Help Messages

If the system technician presses HELP after entering “release tone-clock,” the following message appears:

```
Enter tone/clock location:
[cabinet(1-3)];(carrier(A-E))
```

Error Messages

If an identifier greater than 3 (three) characters is entered, or the cabinet entered is not a digit (number), the following message appears:

```
Identifier invalid
```

If the carrier entered is invalid, the following message appears:

```
Invalid carrier specified
```

If the cabinet entered is not within the valid range of cabinets or the cabinet is not administered, the following message appears:

```
Cabinet number not assigned
```

If there is no tone/clock board at the specified location, one of the following messages appears:

```
Board not inserted
Board not assigned
```

If the specified cabinet carrier location is that of a switch node, the following message appears:

```
Switch Node carrier specified;
invalid command for SN carrier
```

If the cabinet carrier location entered is that of an EPN that is not available, the following message appears:

```
EPN is not available
```

If the tone/clock is not busied out and the specified action is release, the following message appears:

```
Object is not busied out; can't release
```

If the command entered is in conflict with another currently executing command, then a message appears showing the login id of the conflicting user and the conflicting command. The message is as follows:

```
'login id':'command' has a command conflict
```

If during the execution of a command a resource problem occurs that requires the user to restart the command, then the following message appears:

```
Command resources busy;
Press CANCEL to clear, and then resubmit
```

If all of the available maintenance resources are currently in use, then the following message appears:

```
All maintenance resources busy; try again later
```

release trunk

Help Messages

If the system technician presses HELP after entering "release trunk," the following message appears:

```
Enter assigned trunk group number [or group/member]
```

Error Messages

If the format of the identifier is invalid, the following message appears:

```
Format invalid
```

If the range of the trunk group is incorrect, the following error message appears:

```
Trunk or trunk group invalid
```

If the specified trunk group is not administered or has no members, the following message appears:

```
Group not assigned,
or group assigned but with no member
```

If the specified member is not administered, the following message appears:

```
Group member not assigned
```

If the specified trunk group is part of the SCI link, the following message appears:

```
Cannot busyout/release part of SCI link
```

If the command entered is in conflict with another currently executing command, then a message appears showing the login id of the conflicting user and the conflicting command. The message is as follows:

```
'login id':'command' has a command conflict
```

If during the execution of a command a resource problem occurs that requires the user to restart the command, then the following message appears:

```
Command resources busy;
Press CANCEL to clear, and then resubmit
```

If all of the available maintenance resources are currently in use, then the following message appears:

```
All maintenance resources busy; try again later
```

reset board

Help Messages

If the system technician presses HELP after entering “reset board,” the following message appears:

```
Enter board location, ['repeat' (1-100)]
```

Error Messages

If the format of the board location is incorrect, the following error message appears:

```
Port/Board invalid
```

If the EPN on which the specified board is not available, the following message appears:

```
EPN is not available
```

If a board is not inserted in the specified location, then the following message appears:

```
Board not assigned
```

If the specified board is active, the following message appears:

```
Illegal command for active object;
use 'set' to switch to standby
```

If a reset is attempted on an invalid board in the service slot, the following message appears:

```
Board invalid
```

If the command entered is in conflict with another currently executing command, then a message appears showing the login id of the conflicting user and the conflicting command. The message is as follows:

```
'login id':'command' has a command conflict
```

If during the execution of a command a resource problem occurs that requires the user to restart the command, then the following message appears:

```
Command resources busy;
Press CANCEL to clear, and then resubmit
```

If all of the available maintenance resources are currently in use, then the following message appears:

```
All maintenance resources busy; try again later
```

reset interface

Help Messages

If you press HELP after entering “reset interface,” the following message displays:

```
Enter identifier: [cabinet(1)];carrier(A-B);position(1-2)
```

Error Messages

If the specified carrier is not the active PE, the following message appears:

```
Command must be executed from active SPE
```

If the technician-entered cabinet and carrier is invalid for a PPN, the following message appears:

```
Invalid port-network specified
```

If the technician-entered carrier is not a valid carrier, the following message appears:

```
Invalid carrier specified
```

If the technician-entered carrier is not active, the following message displays:

```
Board invalid
```

If the specified carrier/position processor interface circuit pack is not inserted, but the specified carrier is active, the following error message appears:

```
Processor Interface (TN765)
not started or is being started
```

If the command entered is in conflict with another currently executing command, then a message appears showing the login id of the conflicting user and the conflicting command. The message is as follows:

```
'login id':'command' has a command conflict
```

If the standby is entering maintenance mode when this command is executed, then the following message appears:

```
Cannot interrupt Standby SPE while entering
maintenance mode; please try later
```

If the standby SPE is not refreshed when this command is executed, then the following message appears:

```
Standby SPE memory not refreshed; use the
"refresh spe-standby" command.
```

If the standby SPE is not refreshed and the active SPE is hard selected via the SPE select switches when this command is executed, then the following message appears:

```
Active SPE locked via select switches;
Standby SPE memory not refreshed
```

If the standby SPE is busy with another task, then the following message appears:

```
Standby SPE busy with another task;
for information use "status system 1"
```

If the standby SPE is not available when this command is executed, then the following message appears:

```
Standby SPE not available;
for information use "status system 1"
```

If during the execution of a command a resource problem occurs that requires the user to restart the command, then the following message appears:

```
Command resources busy;
Press CANCEL to clear, and then resubmit
```

If all of the available maintenance resources are currently in use, then the following message appears:

```
All maintenance resources busy; try again later
```

reset maintenance

Help Messages

If the system technician presses HELP after entering “reset maintenance” the following message appears:

```
Enter cabinet([0]2-[0]3);[carrier(A)]
```

Error Messages

If the cabinet entered is non numeric or not within a valid range, the following message appears:

```
Cabinet number out of range; Enter 2 - 3
```

If the length of the user entered parameter exceeds three (3), or is in any other way invalid, the following message appears:

```
Entry invalid
```

If the command entered is in conflict with another currently executing command, then a message displays showing the login ID of the conflicting user and the conflicting command. The message is as follows:

```
’login id’:’command’ has a command conflict
```

reset spe-standby

Help Messages

If the system technician presses HELP after entering “reset spe-standby” on a duplex SPE system, the following message appears:

```
Enter standby SPE recovery level ’1’(WARM), ’2’(COLDII),
’3’(COLDI), ’4’(REBOOT) or ’5’(EXT REBOOT)
```

Error Messages

If the specified level is invalid (not 1-5), the following message appears:

```
System reset level invalid
```

If the standby SPE is not refreshed and the SPE Select switches are selecting the active SPE, the following message appears:

```
Active SPE locked via select switches;
Standby SPE memory not refreshed
```

If the standby SPE is not refreshed; the following message appears:

```
Standby SPE memory not refreshed; use the
"refresh spe-standby" command
```

reset system

Help Messages

If the system technician presses HELP after entering "reset system" on a simplex SPE system, the following message appears:

```
Enter system recovery level '1'(WARM), '2'(COLDII),
'3'(COLDI), '4'(REBOOT), or '5'(EXT REBOOT)
```

If the system technician presses HELP after entering "reset system" on a duplex

SPE system, the following message appears:

```
Enter system recovery level '1'(WARM), '2'(COLDII),
'3'(COLDI), '4'(REBOOT), or '5'(EXT REBOOT)
 or 'interchange ['health-override']'
```

Error Messages

If the CANCEL key is pressed after the command has been started, the following message appears:

```
This command may not be canceled
```

If the system reset level is not numeric or "interchange," the following message appears:

```
System reset level invalid
```

If the "health-override" option is specified with any level of 1 - 5, the following message appears:

```
The 'health-override' option is only used
with the 'interchange' level
```

If the command entered is in conflict with another currently executing command, then a message appears showing the login id of the conflicting user and the conflicting command. The message is as follows:

```
'login id':'command' has a command conflict
```

If this command is issued while an **upgrade software** command is active the following message appears:

```
Standby SPE upgrade in progress, command denied
```

restore announcements

Help Messages

If the system technician presses HELP after entering “restore announcements,” the following message appears:

```
Enter ['print' or 'schedule']
```

Error Messages

If the announcement data module cannot be accessed (upload/download port is active), the following message appears:

```
Announcement data module not available
```

If the announcement data module has been taken out of service, the following message appears:

```
Announcement data module out of service
```

If one or more of the announcement ports are in use, the following message appears:

```
Announcement port in use; please try later
```

If the announcement data module is not administered, the following message appears:

```
Required announcement data module not administered
```

If the announcement data module is not administered or is currently in use, the following message appears:

```
Required data module not administered or unavailable
```

If there is no announcement board in the system, the following message appears:

```
Integrated announcement board not present
```

If the NETCON data module is not administered or out of service the following message appears:

```
Required NETCON data module not
administered or out-of-service
```

If the NETCON data module is busy the following message appears:

```
Required NETCON data module unavailable
```

If the command entered is in conflict with another currently executing command, then a message appears showing the login id of the conflicting user and the conflicting command. The message is as follows:

```
'login id':'command' has a command conflict
```

resume hardware-group

Help Messages

If the system technician presses HELP after entering “resume hardware-group,” the following message appears:

```
Entry is not required
```

Error Messages

If there is no “test hardware-group” command to be resumed, i.e, no “test hardware-group” command was previously canceled, or some system recovery had occurred and no “test hardware-group” command had since been entered and subsequently canceled, then the following message appears:

```
Command aborted - no hardware-group
test available to resume
```

If the command entered is in conflict with another currently executing command, then a message appears showing the login id of the conflicting user and the conflicting command. The message is as follows:

```
'login id':'command' has a command conflict
```

If the previously entered hardware-group command used the “all-ports” option the following message appears:

```
Resume disallowed with 'all-ports'
option in original command
```

If the previously entered hardware-group command used the “SPE-interchange” option the following message appears:

```
Resume disallowed with 'SPE-interchange'
option in original command
```

save announcements

Help Messages

If the system technician presses HELP after entering “save announcements” on a simplex SPE system the following message appears:

```
Entry is not required
```

If the system technician presses HELP after entering “save announcements” on a duplex SPE system the following message appears:

```
Enter ['spe-active' or 'spe-standby']
```

Error Messages

If the announcement data module cannot be accessed (upload/download port is active), the following message appears:

```
Announcement data module not available
```

If the announcement data module is out of service, the following message appears:

```
Announcement data module out of service
```

If one or more of the announcement ports are in use, the following message appears:

```
Announcement port in use; please try later
```

If there are no announcements on the announcement board, the following message appears:

```
No announcements on board
```

If the announcement data module is not administered, the following message appears:

```
Required announcement data module not administered
```

If the announcement data module is not administered or is currently in use, the following message appears:

```
Required data module not administered or unavailable
```

If there is no announcement board in the system, the following message appears:

```
Integrated announcement board not present
```

If the standby processor times out, the following message appears:

```
Command timed out on standby processor
```

If an inconsistency between the NETCON data module and the announcement data module exists (e.g. both data modules using the same COR) the following message appears:

```
System error, please try later
```

If the NETCON data module is not administered or out of service the following message appears:

```
Required NETCON data module not
administered or out-of-service
```

If the NETCON data module is busy the following message appears:

```
Required NETCON data module unavailable
```

If the time of day is not set, the following message appears:

```
Please set the time of day before proceeding
```

If the standby SPE is inaccessible, the following message appears:

```
Cannot access the standby SPE at this time
```

If the command entered is in conflict with another currently executing command, then a message appears showing the login id of the conflicting user and the conflicting command. The message is as follows:

```
'login id':'command' has a command conflict
```

save translation

Help Messages

If the system technician presses HELP after entering “save translation” the following message appears:

```
Enter ['spe-active' or 'spe-standby']
```

Error Messages

If there is another tape activity currently running on the system, then the following message appears:

```
A tape command is active;
this command is not allowed at this time
```

If the user chooses that save be done on the standby processor, and the standby processor is inaccessible, then the following message appears:

```
Cannot access the standby SPE at this time
```

If the command entered is in conflict with another currently executing command, then a message appears showing the login id of the conflicting user and the conflicting command. The message is as follows:

```
'login id':'command' has a command conflict
```

set expansion-link

Help Messages

If the system technician presses HELP after entering “set expansion-interface,” the following message appears:

```
Enter board location:
[cabinet(1-3)];carrier(A-E);slot(0-20)
```

Error Messages

If the format of the specified expansion interface circuit pack is invalid, the following message appears:

```
Port/Board invalid
```

If the link associated with the entered EI location is already active, the following message appears:

```
EXP-INTF is already on active link
```

If the specified expansion interface is not configured in the system, the following message appears:

```
Board not assigned
```

If the specified expansion interface is already the active link, the following message appears:

```
EXP-INTF is already on active link
```

If the specified expansion interface is unable to become active, the following message appears:

```
Standby EXP-INTF Link is unable to take over
```

If there are no maintenance objects for the specified board, the following message appears:

```
No MO in this board
```

If the specified board is not an expansion interface board, the following message appears:

```
Address is not a valid Expansion Interface Board
```

If the command entered is in conflict with another currently executing command, then a message appears showing the login id of the conflicting user and the conflicting command. The message is as follows:

```
'login id':'command' has a command conflict
```

If during the execution of a command a resource problem occurs that requires the user to restart the command, then the following message appears:

```
Command resources busy;
Press CANCEL to clear, and then resubmit
```

If all of the available maintenance resources are currently in use, then the following message appears:

```
All maintenance resources busy; try again later
```

set options

Help Messages

If the user presses HELP after entering “set options,” the following message appears:

```
Entry is not required
```

Error Messages

If the command entered is in conflict with another currently executing command, then a message appears showing the login id of the conflicting user and the conflicting command. The message is as follows:

```
'login id':'command' has a command conflict
```

If during the execution of a command a resource problem occurs that requires the user to restart the command, then the following message appears:

```
Command resources busy;
Press CANCEL to clear, and then resubmit
```

If all of the available maintenance resources are currently in use, then the following message appears:

```
All maintenance resources busy; try again later
```

Field Help

Since all fields on the first page may have the same values, then pressing HELP in any field on the first page presents the following field help message:

```
m(inor) n(o) r(eport) w(arning) y(es)
```

The following is a description of the values:

m(inor)	Downgrade the major alarm to a minor alarm and report the alarm to INADS.
n(o)	Do not log the alarm or report it to INADS.
r(eport)	Downgrade the alarm to a warning and report the warning to INADS.
w(arning)	Downgrade the alarm to a warning, log it but do not report the alarm to INADS.
y(es)	Log and report the alarm to INADS.

All fields on page 2 may have the same values. Pressing HELP in any field on page 2 gives the following field help message:

```
Enter alarm group number: 1 to 4
```

The alarm group number is a way of distinguishing four different groups of alarms. These alarm groups allow the user to specify that alarms in different groups are handled differently from those in other groups.

Field Error Messages

All of the fields on the first page allow the same values. Only one error message is printed for all first page fields. If the value is not one of the listed characters (m,n,r,w,or y) then the following message appears:

```
"X" is an invalid entry; please press HELP key
```

All of the fields on page 2 allow the same values. If the value in one of these fields is not numeric, the following message appears:

```
Entry must be all digits
```

All of the fields on pages page 2 allow the same values. If the value in one of these fields is a digit other than 1, 2, 3, or 4, the following message appears:

```
Entry out of range
```

set signaling-group

Help Messages

If the system technician presses HELP after entering “set signaling-group,” the following appears:

```
Enter group identifier
```

Error Messages

If the specified group identifier is non numeric or out of range, the following message appears:

```
Signaling group invalid
```

If the specified group identifier is not administered, the following message appears:

```
No signaling group assigned
```

If during the execution of a command a resource problem occurs that requires the user to restart the command, then the following message appears:

```
Command resources busy;
Press CANCEL to clear, and then resubmit
```

If all of the available maintenance resources are currently in use, then the following message appears:

```
All maintenance resources busy; try again later
```

set synchronization

Help Messages

If the system technician presses HELP after entering “set synchronization,” the following message appears:

```
Enter DS1 board location or Tone-Clock location:
[(cabinet (1-3)]; carrier (A-E))
```

Error Messages

If the command entered is in conflict with another currently executing command, then a message appears showing the login id of the conflicting user and the conflicting command. The message is as follows:

```
'login id':'command' has a command conflict
```

If during the execution of a command a resource problem occurs that requires the user to restart the command, then the following message appears:

```
Command resources busy;
Press CANCEL to clear, and then resubmit
```

If all of the available maintenance resources are currently in use, then the following message appears:

```
All maintenance resources busy; try again later
```

Can not set synchronization to standby tone clock circuit pack.

```
Cannot set synchronization to standby tone/clock board.
```

set tdm

Help Messages

If the system technician presses HELP after entering “set tdm,” the following message appears:

```
Enter ’port-network’, port network number (1-3),
’bus’, bus (’a’ or ’b’); [’override’]
```

Error Messages

If the technician enters “bus” before “port-network,” the following message appears:

```
’bus’ is an invalid identifier; please press HELP
```

If the technician does not enter all digits for the port-network number, the following message appears:

```
Entry must be all digits
```

If the technician enters a bus other than A or B, the following message appears:

```
Identifier invalid
```

If the technician enters a Port Network number that is not administered, the following message appears:

```
Port Network number not assigned
```

If the command entered is in conflict with another currently executing command, then a message appears showing the login id of the conflicting user and the conflicting command. The message is as follows:

```
’login id’:’command’ has a command conflict
```

If during the execution of a command a resource problem occurs that requires the user to restart the command, then the following message appears:

```
Command resources busy;
Press CANCEL to clear, and then resubmit
```

If all of the available maintenance resources are currently in use, then the following message appears:

```
All maintenance resources busy; try again later
```

set time

Help Messages

If the system technician presses HELP after entering “set time,” the following message appears:

```
Entry is not required
```

Error Messages

If the system encounters an error in getting the current time of day, then the following message appears:

```
Error encountered, cannot complete request
```

If the command entered is in conflict with another currently executing command, then a message appears showing the login id of the conflicting user and the conflicting command. The message is as follows:

```
'login id':'command' has a command conflict
```

If during the execution of a command a resource problem occurs that requires the user to restart the command, then the following message appears:

```
Command resources busy;
Press CANCEL to clear, and then resubmit
```

If all of the available maintenance resources are currently in use, then the following message appears:

```
All maintenance resources busy; try again later
```

Field Help

Following are the help messages that the system technician will see upon tabbing to the specified field and pressing the HELP key.

Day of the Week:	A list of the days of the week will be presented on the bottom line. The help is longer than 80 characters, consequently, the "(MORE)" message will appear. In order to get the continuation of the list, the system technician needs to type another help key. The list of key words is: Monday, Tuesday, Wednesday, Thursday, Friday, Saturday, Sunday.
Day of the Month:	"Enter current day 1-31."
Month:	A list of the months of the year will be presented on the bottom line. The help is longer than 80 characters, consequently, the “(MORE)” message will appear. In order to get the continuation of the list, the system technician needs to select the HELP key. The list of key words is: January, February, March, April, May, June, July, August, September, October, November, December.
Year:	"Enter current year"

Hour:	"Enter number between 0-23"
Minute:	"Enter number between 0-59"
Second:	This field is restricted and consequently the system technician cannot tab to or change this value.

Field Error Messages

Following are the error messages that appears on the bottom of the screen. The messages are displayed when the system technician tabs out of a field and the validation routines are executed.

Day of the Week:	“”xxxxxx” is an invalid entry; please press HELP”
Day of the Month:	"Day invalid"
Month:	“”xxxx” is an invalid entry; please press HELP”
Year:	"Year invalid"
Hour:	"Hour invalid"
Minute:	"Minute invalid"

set tone-clock

Help Messages

If you press HELP after entering “set tone-clock,” the following message displays:

```
Enter tone/clock location:
[cabinet(1-3)];(carrier(A-E)) ['override']
```

Error Messages

If an identifier greater than 3 characters is entered, or the cabinet entered is not a digit (number), the following message appears:

```
Identifier invalid
```

If the carrier entered is invalid, the following message appears:

```
Invalid carrier specified
```

If the cabinet entered is not within the valid range of cabinets or the cabinet is not administered, the following message appears:

```
Cabinet number not assigned
```

If there is no tone/clock board at the specified location, one of the following messages appears:

```
Board not inserted
Board not assigned
```

If the cabinet carrier location entered is that of an EPN that is not available, the following message appears:

```
EPN is not available
```

If the board is not a TN768 tone/clock board, the following message displays:

```
Cannot set tdm bus or tone/clock boards;
need a TN768 board
```

If the command entered is in conflict with another currently executing command, then a message appears showing the login id of the conflicting user and the conflicting command. The message is as follows:

```
'login id':'command' has a command conflict
```

If during the execution of a command a resource problem occurs that requires the user to restart the command, then the following message appears:

```
Command resources busy;
Press CANCEL to clear, and then resubmit
```

If all of the available maintenance resources are currently in use, the following message displays:

```
All maintenance resources busy; try again later
```

set vector

Help Messages

If the system technician presses HELP after entering “set vector” on a simplex system, the following message appears:

```
Enter a memory dump vector value: (0-F)


The memory dump vector value is a hex value representing restart levels
 A hex value of '1' causes memory dumps to be taken on WARM restarts
 A hex value of '2' causes memory dumps to be taken on COLDII restarts
 A hex value of '4' causes memory dumps to be taken on COLDI restarts
 A hex value of '8' causes memory dumps to be taken on REBOOT restarts


All other hex values represent a combination of restart levels.
 The combination is determined by adding the hex values of the individual
 restarts together (e.g. a hex value of '3' causes memory dumps to
 be taken on WARM and COLDII restarts, a hex value of 'F' causes memory
 dumps to be taken on WARM, COLDII, COLDI, and REBOOT restarts, etc.)
```

If the system technician presses HELP after entering “set vector” on a duplex system, the following message appears:

```
Enter a memory dump vector value: (0-F),
 ['spe-active', 'spe-standby', 'spe-maint']


The memory dump vector value is a hex value representing restart levels
  A hex value of '1' causes memory dumps to be taken on WARM restarts
  A hex value of '2' causes memory dumps to be taken on COLDII restarts
  A hex value of '4' causes memory dumps to be taken on COLDI restarts
  A hex value of '8' causes memory dumps to be taken on REBOOT restarts


All other hex values represent a combination of restart levels.
  The combination is determined by adding the hex values of the individual
  restarts together (e.g. a hex value of '3' causes memory dumps to
  be taken on WARM and COLDII restarts, a hex value of 'F' causes memory
  dumps to be taken on WARM, COLDII, COLDI, and REBOOT restarts, etc.)
```

Error Messages

If the format of the condition (dump vector value) is invalid, the following message appears:

```
Entry invalid; please press HELP
```

If the command entered is in conflict with another currently executing command, then a message appears showing the login id of the conflicting user and the conflicting command. The message is as follows:

```
'login id':'command' has a command conflict
```

If during the execution of a command a resource problem occurs that requires the user to restart the command, then the following message appears:

```
Command resources busy; Press CANCEL to clear, and then
resubmit
```

If all of the available maintenance resources are currently in use, then the following message appears:

```
All maintenance resources busy; try again later
```

status access-endpoint

Help Messages

If the user presses HELP after entering “status access-endpoint,” the following message appears:

```
Enter assigned extension, ['print']
```

Error Messages

If the format for the extension is incorrect, the following message displays:

```
Extension invalid
```

If the extension is not administered, the following message displays:

```
Extension not assigned
```

If the object associated with the specified extension is not an access endpoint, the following message appears:

```
Extension assigned to object
other than access-endpoint
```

If the board that contains the access endpoint is not inserted in the system, the following message appears:

```
Board not inserted
```

If the EPN on which the access endpoint resides is not accessible, the following message appears:

```
EPN is not available
```

If during the execution of a command a resource problem occurs that requires the user to restart the command, then the following message appears:

```
Command resources busy;
Press CANCEL to clear, and then resubmit
```

If all of the available maintenance resources are currently in use, then the following message appears:

```
All maintenance resources busy; try again later
```

status administered-connection

Help Messages

If the system technician presses HELP after entering “status administered-connection,” the following message appears:

```
Enter assigned administered connection number(1-128),
[‘print‘]
```

Error Messages

If the user entered administered-connection number is in the wrong format, the following error message appears:

```
Identifier invalid
```

If the user entered administered-connection number is out of range (not between 1 and 128), the following error message appears:

```
Entry out of range
```

If the user entered administered-connection number is not administered, the following error message appears:

```
Identifier not assigned
```

If the software data cannot be sent to the SAT, the following message appears:

```
Error encountered can't complete request
```

If during the execution of a command a resource problem occurs that requires the user to restart the command, then the following message appears:

```
Command resources busy; Press CANCEL to clear, and then
resubmit
```

If all of the available maintenance resources are currently in use, then the following message appears:

```
All maintenance resources busy; try again later
```

status attendant

Help Messages

If the system technician presses HELP after entering "status attendant," the following message appears:

```
Enter assigned console(1-16), ['print']
```

Error Messages

If the entered console number is not a valid number from 1 through 16 the following message appears:

```
Console number invalid
```

If the console number is not administered, the following error message appears:

```
Console number not assigned
```

If a software fault is encountered while the command is executing, the following message appears:

```
Error encountered, can't complete request
```

If during the execution of a command a resource problem occurs that requires the user to restart the command, then the following message appears:

```
Command resources busy; Press CANCEL to clear, and then
resubmit
```

If all of the available maintenance resources are currently in use, then the following message appears:

```
All maintenance resources busy; try again later
```

status audits

Help Messages

If the technician presses HELP after entering “status audits,” the following message appears:

```
cumulative peak-hour
```

Error Messages

If the “print” option is specified and there is no printer attached to the terminal or if the printer is off line, then the following message appears:

```
Printer failed
```

If during the execution of a command a resource problem occurs that requires the user to restart the command, then the following message appears:

```
Command resources busy;
Press CANCEL to clear, and then resubmit
```

If all of the available maintenance resources are currently in use, then the following message appears:

```
All maintenance resources busy; try again later
```

status bri-port

Help Messages

If the system technician presses HELP after entering “status bri,” the following appears:

```
Enter an isdn-bri port location, ['print']
```

Error Messages

If the format of the port location is incorrect, the following message appears:

```
Port/Board invalid
```

If the port location entered is not between 5 and 7 characters long, the following message appears:

```
Port invalid
```

If the port is not administered, the following message appears:

```
Port not assigned
```

If the board associated with the entered port location is not inserted, the following message appears:

```
Board not inserted
```

If during the execution of a command a resource problem occurs that requires the user to restart the command, then the following message appears:

```
Command resources busy;
Press CANCEL to clear, and then resubmit
```

If all of the available maintenance resources are currently in use, then the following message appears:

```
All maintenance resources busy; try again later
```

status card-mem

Help Messages

If the system technician presses HELP after entering “status card-mem,” the following message appears for a duplex system:

```
Enter [cabinet(1)];carrier(A-B), [’print’]
[’print’]
```

Error Messages

If the carrier entered is invalid, the following message appears:

```
“entered value” is an invalid identifier;
press RETURN to execute modified command
```

If the NETCON board is not TN777B, then the following message appears:

```
Must install TN777B circuit pack
```

If the system is insane, the following message appears:

```
Error encountered, can't complete request
```

If the command entered is in conflict with another currently executing command, then a message appears showing the login id of the conflicting user and the conflicting command. The message is as follows:

```
'login id':'command' has a command conflict
```

If the standby is entering maintenance mode when this command is executed, then the following message appears:

```
Cannot interrupt Standby SPE while entering
maintenance mode; please try later
```

If the standby SPE is not refreshed when this command is executed, then the following message appears:

```
Standby SPE memory not refreshed;
use the "refresh spe-standby" command.
```

If the standby SPE is not refreshed and the active SPE is hard selected via the SPE select switches when this command is executed, then the following message appears:

```
Active SPE locked via select switches;
Standby SPE memory not refreshed
```

If the standby SPE is busy with another task, then the following message appears:

```
Standby SPE busy with another task;
for information use "status system 1"
```

If the standby SPE is not available when this command is executed, then the following message appears:

```
Standby SPE not available;
for information use "status system 1"
```

status cdr-link

Help Messages

If the system technician presses HELP after entering "status cdr-link", the following message appears:

```
['print']
```

Error Messages

If during the execution of a command a resource problem occurs that requires the user to restart the command, then the following message appears:

```
Command resources busy;
Press CANCEL to clear, and then resubmit
```

If all of the available maintenance resources are currently in use, then the following message appears:

```
All maintenance resources busy; try again later
```

status cleared-alarm-notif

Help Messages

```
['1' or '2']
```

status data-module

Help Messages

If the system technician presses HELP after entering “status data-module”, the following message appears:

```
Enter assigned extension, ['print']
```

Error Messages

If the format of the extension is incorrect, the following error message appears:

```
Extension invalid
```

If the extension is not administered, the following message appears:

```
Extension not assigned
```

If the object associated with the extension is not a data module, the following message appears:

```
Extension exists but assigned to a different object
```

If software fails to complete the command, one of the following messages appears:

```
No tests for this MO
EPN is not available
Board not assigned
Port not assigned
Error encountered, can't complete request
```

If during the execution of a command a resource problem occurs that requires the user to restart the command, then the following message appears:

```
Command resources busy;
Press CANCEL to clear, and then resubmit
```

If all of the available maintenance resources are currently in use, then the following message appears:

```
All maintenance resources busy; try again later
```

status hardware-group

Help Messages

If the system technician presses HELP after entering “status hardware-group”, the following message appears:

```
['print']
```

status health

Help Messages

If the system technician presses HELP after entering “status health”, the following object command word choices appears:

```
['print']
```

Error Messages

If during the execution of a command a resource problem occurs that requires the user to restart the command, then the following message appears:

```
Command resources busy;
Press CANCEL to clear, and then resubmit
```

If all of the available maintenance resources are currently in use, then the following message appears:

```
All maintenance resources busy; try again later
```

status interface

Help Messages

If the system technician presses HELP after entering “status interface”, the following message appears:

```
Enter location: [cabinet(1)], carrier (A-B),
          position(1-2); ['print']
```

Error Messages

If the specified carrier is not the active PE, the following message appears:

```
Port invalid
```

If the technician-entered cabinet and carrier is invalid for a PPN, the following message appears:

```
Entry is bad
```

If the technician-entered carrier is not a valid carrier, the following message appears:

```
Invalid carrier specified
```

If the technician-entered carrier is not active, the following error message will be entered:

```
Board invalid
```

If the specified carrier/position processor interface circuit pack is not inserted, but the specified carrier is active, the following error message appears:

```
Processor Interface (TN765) not
  started or is being started
```

If during the execution of a command a resource problem occurs that requires the user to restart the command, then the following message appears:

```
Command resources busy;
Press CANCEL to clear, and then resubmit
```

If all of the available maintenance resources are currently in use, then the following message appears:

```
All maintenance resources busy; try again later
```

status isdn-testcall

Help Messages

If the system technician presses HELP after entering “status isdn-testcall”, the following appears:

```
Enter group #/member # [’print’]
```

Error Messages

If the specified format of the trunk location is incorrect, the following message appears:

```
Format invalid
```

If the specified trunk group or member range is invalid, the following message appears:

```
Trunk or trunk group invalid
```

If a trunk group and member is not specified, the following message appears:

```
Must specify group/member pair
```

\If the specified trunk group is not administered or has no members administered, the following message appears:

```
Group not assigned,
or group assigned but with no member
```

If the specified trunk group member is not administered, the following message appears:

```
Group member not assigned
```

If a test call is currently not in progress when the command is entered, the following message appears:

```
Test Call not in progress
```

If the specified trunk is not an ISDN-PRI trunk, the following message appears:

```
Invalid non ISDN-PRI trunk specified
```

If software data cannot be sent to the SAT, the following message appears:

```
Error encountered, can’t complete request
```

If during the execution of a command a resource problem occurs that requires the user to restart the command, then the following message appears:

```
Command resources busy;
Press CANCEL to clear, and then resubmit
```

If all of the available maintenance resources are currently in use, then the following message appears:

```
All maintenance resources busy; try again later
```

status journal-link

Help Messages

If the system technician presses HELP after entering “status journal-link”, the following object command word choices appears:

```
pms-log       wakeup-log
```

Error Messages

If during the execution of a command a resource problem occurs that requires the user to restart the command, then the following message appears:

```
Command resources busy;
Press CANCEL to clear, and then resubmit
```

If all of the available maintenance resources are currently in use, then the following message appears:

```
All maintenance resources busy; try again later
```

status link

Help Messages

If the system technician presses HELP after entering “status link”, the following message appears:

```
Enter 1 character link number [’print’]
```

Error Messages

If the specified link number is invalid, the following message appears:

```
Link out of range, please press HELP
```

If the specified link number is not administered, the following message appears:

```
Link not administered
```

If during the execution of a command a resource problem occurs that requires the user to restart the command, then the following message appears:

```
Command resources busy;
Press CANCEL to clear, and then resubmit
```

If all of the available maintenance resources are currently in use, then the following message appears:

```
All maintenance resources busy; try again later
```

status logins

Help Messages

If the technician presses HELP after entering “status logins” the following message appears:

```
['print']
```

Error Messages

If during the execution of a command a resource problem occurs that requires the user to restart the command, then the following message appears:

```
Command resources busy;
Press CANCEL to clear, and then resubmit
```

If all of the available maintenance resources are currently in use, then the following message appears:

```
All maintenance resources busy; try again later
```

status mst

Help Messages

If you press HELP after entering “status mst”, the following message displays:

```
Entry is not required
```

Error Messages

If the command entered is in conflict with another currently executing command, then a message appears showing the login id of the conflicting user and the conflicting command. The message is as follows:

```
'login id':'command' has a command conflict
```

If during the execution of a command a resource problem occurs that requires the user to restart the command, then the following message appears:

```
Command resources busy;
Press CANCEL to clear, and then resubmit
```

If all of the available maintenance resources are currently in use, then the following message appears:

```
All maintenance resources busy; try again later
```

status packet-control

Help Messages

If the system technician presses HELP after entering “status packet-control”, the following message appears:

```
Enter Packet Control location:
   [cabinet(1)];carrier(A-B)
```

Error Messages

If this command is entered for a packet-control that resides on the stand-by control complex of a High or Critical Reliability System, the following message appears:

```
Command only applies to the active Packet Control
```

If during the execution of a command a resource problem occurs that requires the user to restart the command, then the following message appears:

```
Command resources busy;
Press CANCEL to clear, and then resubmit
```

If all of the available maintenance resources are currently in use, then the following message appears:

```
All maintenance resources busy; try again later
```

status periodic-scheduled

This command displays the status of periodic and scheduled maintenance testing performed by the system.

Help Messages

If the system technician presses HELP after entering “status period-scheduled”, the following message appears:

```
['print']
```

Error Messages

If during the execution of a command a resource problem occurs that requires the user to restart the command, then the following message appears:

```
Command resources busy;
Press CANCEL to clear, and then resubmit.
```

If all of the available maintenance resources are currently in use, then the following message appears:

```
All maintenance resources busy; try again later.
```

status pms-link

Help Messages

If the system technician presses HELP after entering “status pms-link”, the following message appears:

```
['print']
```

Error Messages

If during the execution of a command a resource problem occurs that requires the user to restart the command, then the following message appears:

```
Command resources busy;
Press CANCEL to clear, and then resubmit
```

If all of the available maintenance resources are currently in use, then the following message appears:

```
All maintenance resources busy; try again later
```

status pri-endpoint

Help Messages

If the user presses HELP after entering “status pri-endpoint”, the following message appears:

```
Enter assigned extension, ['print']
```

Error Messages

If the format for the extension is incorrect, the following error message appears:

```
Extension invalid
```

If the extension is not administered, the following message appears:

```
Extension not assigned
```

If the object associated with the specified extension is not a PRI endpoint, the following message appears:

```
Extension assigned to object other than pri-endpoint
```

If the board that contains the PRI endpoint is not inserted in the system, the following message appears:

```
Board not inserted
```

If the EPN on which the PRI endpoint resides is not accessible, the following message appears:

```
EPN is not available
```

If during the execution of a command a resource problem occurs that requires the user to restart the command, then the following message appears:

```
Command resources busy;
Press CANCEL to clear, and then resubmit
```

If all of the available maintenance resources are currently in use, then the following message appears:

```
All maintenance resources busy; try again later
```

status processor-channel

Help Messages

If the system technician presses HELP after entering “status processor-channel”, the following message appears:

```
Enter a processor-channel number 1-64 ['print']
```

Error Messages

If the technician-entered channel number is invalid, the following message appears:

```
Channel invalid
```

If during the execution of a command a resource problem occurs that requires the user to restart the command, then the following message appears:

```
Command resources busy;
Press CANCEL to clear, and then resubmit
```

If all of the available maintenance resources are currently in use, then the following message appears:

```
All maintenance resources busy; try again later
```

status signaling-group

Help Messages

If the system technician presses HELP after entering “status signaling-group”, the following appears:

```
Enter group identifier (1-8) ['print']
```

Error Messages

If the specified group identifier is non numeric or out of range, the following message appears:

```
Signaling group invalid
```

If the specified group identifier is not administered, the following message appears:

```
No signaling group assigned
```

If the software data cannot be sent to the SAT, the following message appears:

```
Error encountered, can't complete request
```

If during the execution of a command a resource problem occurs that requires the user to restart the command, then the following message appears:

```
Command resources busy;
Press CANCEL to clear, and then resubmit
```

If all of the available maintenance resources are currently in use, then the following message appears:

```
All maintenance resources busy; try again later
```

status sp-link

Help Messages

If the system technician presses HELP after entering "status sp-link", the following message appears:

```
['print']
```

Error Messages

If during the execution of a command a resource problem occurs that requires the user to restart the command, then the following message appears:

```
Command resources busy;
Press CANCEL to clear, and then resubmit
```

If all of the available maintenance resources are currently in use, then the following message appears:

```
All maintenance resources busy; try again later
```

status station

Help Messages

If the system technician presses HELP after entering “status station”, the following message appears:

```
Enter assigned extension, ['print']
```

Error Messages

If the extension format is incorrect, the following message appears:

```
Extension invalid
```

If the extension is not administered, the following message appears:

```
Extension not assigned
```

If the object associated with the extension is not a station or an attendant console, the following message appears:

```
Extension exists but assigned to a different object
```

Error Messages

If during the execution of a command a resource problem occurs that requires the user to restart the command, then the following message appears:

```
Command resources busy;
Press CANCEL to clear, and then resubmit
```

If all of the available maintenance resources are currently in use, then the following message appears:

```
All maintenance resources busy; try again later
```

status synchronization

Help Messages

If the system technician presses HELP after entering “status synchronization”, the following message appears:

```
['print']
```

Error Messages

If the command entered is in conflict with another currently executing command, then a message appears showing the login id of the conflicting user and the conflicting command. The message is as follows:

```
'login id':'command' has a command conflict
```

If during the execution of a command a resource problem occurs that requires the user to restart the command, then the following message appears:

```
Command resources busy;
Press CANCEL to clear, and then resubmit
```

If all of the available maintenance resources are currently in use, then the following message appears:

```
All maintenance resources busy; try again later
```

status system

Help Messages

If the system technician presses HELP after entering “status system”, the following message appears:

```
Please enter one of the following object command words:
                    1st-cabinet
                    2nd-cabinet
                    3rd-cabinet
                   all-cabinets
```

If the system technician presses HELP after entering “status system cabinet”, where “cabinet” is one of the object described above, the following message appears:

```
['print']
```

Error Messages

None

status trunk

Help Messages

If the system technician presses HELP after entering “status trunk”, the following message appears:

```
Enter assigned trunk group(1-99)
or [group/member(1-99)], [‘print‘]
```

Error Messages

If the format of the trunk identifier is incorrect, the following error message appears:

```
Format invalid
```

If the trunk identifier is not in the valid range, the following error message appears:

```
Trunk or trunk group invalid
```

If the trunk group is not administered or has no members, the following message appears:

```
Group not assigned, or group assigned
but with no member
```

If the trunk group member is not administered, the following message appears:

```
Group member not assigned
```

If during the execution of a command a resource problem occurs that requires the user to restart the command, then the following message appears:

```
Command resources busy;
Press CANCEL to clear, and then resubmit
```

If all of the available maintenance resources are currently in use, then the following message appears:

```
All maintenance resources busy; try again later
```

status tsc-administered

Help Messages

If the system technician presses HELP after entering “status tsc-administered” the following message appears:

```
Enter sig group # (1-8) /tsc index # (1-64),
['print']
```

Error Messages

If the format for the specified signaling group or the signaling group and TSC is incorrect, the following message appears:

```
Format invalid
```

If the specified signaling group number is out of range, the following message appears:

```
Signaling group invalid
```

If the specified signaling group is not administered, the following message appears:

```
No signaling group assigned
```

If the specified signaling group has no TSC assigned or the specified TSC is unadministered, the following message appears:

```
No TSC assigned
```

If the specified TSC number is out of range, the following message appears:

```
Tsc index invalid
```

If the software data cannot be sent to the SAT, the following message appears:

```
Error encountered, can't complete request
```

If during the execution of a command a resource problem occurs that requires the user to restart the command, then the following message appears:

```
Command resources busy;
Press CANCEL to clear, and then resubmit
```

If all of the available maintenance resources are currently in use, then the following message appears:

```
All maintenance resources busy; try again later
```

status tti

Help Messages

If the system technician presses HELP after entering "status tti", the following message appears:

```
['print']
```

Error Messages

If during the execution of a command a resource problem occurs that requires the user to restart the command, then the following message appears:

```
Command resources busy;
Press CANCEL to clear, and then resubmit.
```

If all of the available maintenance resources are currently in use, then the following message appears:

```
All maintenance resources busy; try again later.
```

test access-endpoint

Help Messages

If the user presses HELP after entering “test access-endpoint”, the following message appears:

```
Enter extension number, [’long’ or ’short’],
      [’repeat’ (1-100)], [’schedule’]
```

Error Messages

If the format for the extension is incorrect, the following error message appears:

```
Extension invalid
```

If the EPN on which the access endpoint resides is not accessible, the following message appears:

```
EPN is not available
```

If the extension is not administered, the following message appears:

```
Extension not assigned
```

If the object associated with the specified extension is not an access endpoint, the following message appears:

```
Extension assigned to object
 other than access-endpoint
```

If the board that contains the access endpoint is not inserted in the system, the following message appears:

```
Board not inserted
```

If the command entered is in conflict with another currently executing command, then a message appears showing the login id of the conflicting user and the conflicting command. The message is as follows:

```
’login id’:’command’ has a command conflict
```

If during the execution of a command a resource problem occurs that requires the user to restart the command, then the following message appears:

```
Command resources busy;
Press CANCEL to clear, and then resubmit
```

If all of the available maintenance resources are currently in use, then the following message appears:

```
All maintenance resources busy; try again later
```

test alarms

Help Messages

If the technician presses HELP after entering “test alarms” the following message appears:

```
Enter [’auto-page’], [’failures’], [’step’],
[’short’ or ’long’], [’repeat’ (1-100) or ’clear’]
```

Error Messages

If the command entered is in conflict with another currently executing command, then a message appears showing the login id of the conflicting user and the conflicting command. The message is as follows:

```
’login id’:’command’ has a command conflict
```

If during the execution of a command a resource problem occurs that requires the user to restart the command, then the following message appears:

```
Command resources busy;
Press CANCEL to clear, and then resubmit
```

If all of the available maintenance resources are currently in use, then the following message appears:

```
All maintenance resources busy; try again later
```

Field Help

Following are the help messages that the system technician will see upon tabbing to the specified field and pressing the HELP key.

Major?	"n(o) y(es)"
Minor?	"n(o) y(es)"
Warning?	"n(o) y(es)"
Interval:	"m(onth), h(our), d(ay), w(eek), a(ll)"
From month	"Enter month between 1-12"
From (day)	"Enter day between 0-31"
From (hour)	"Enter hour between 0-23"
From (minute)	"Enter minute between 0-59"
To (month)	"Enter month between 1-12"
To (day)	"Enter day between 0-31"
To (hour)	"Enter hour between 0-23"
To (minute)	"Enter minute between 0-59"
Cabinet:	"Enter cabinet number (1-3)"

Port Network:	"Enter port network number (1-3)"
Board Number:	"Enter 4 character board number; [cabinet(1-3)]:carrier(A-E):slot(0-21)"
Port:	"Enter port number; [cabinet(1-3)]:carrier(A-E):slot(0-21):circuit(1-24)"
Category:	“adm-conn, announce, bri/asai, card-mem, cdr, data-mod, detector, dup-spe, environ, ext-intf, ext-dev, generatr, inads-link, infc, maint, mbus, memory, misc, mnt-test, modem, netcon, pkt, pkt_ctrl, quick-st, pms/jrnl, procr, s-syn, stabd, stacrk, stations, sys-prnt, tape, tdm, tone, trkbd, trkcrk, trunks and wideband” (For a table describing the category entries in greater detail, see the “display errors” command.)
Extension:	"Enter assigned extension, or blank"
Trunk (group)	"Enter group number between 1-99"
Trunk (member)	"Enter group member between 1-99, or blank"

Field Error Messages

Following are the error messages that appears on the screen. The messages display when the system technician tabs out of a field and the validation routines are executed. In the following messages, an “x” represents the character that was entered by the user.

Major?	""x" is an invalid entry; please press HELP"
Minor?	""x" is an invalid entry; please press HELP"
Warning?	""x" is an invalid entry; please press HELP"
Interval:	""x" is an invalid entry; please press HELP key"
From (month)	"Entry must be all digits"
From (day)	“Entry must be all digits” “Day invalid”
From (hour)	“Entry must be all digits” “Hour invalid”
From (minute)	“Entry must be all digits” “Minute invalid”
To (month)	"Entry must be all digits"
To (day)	“Entry must be all digits” “Day invalid”
To (hour)	“Entry must be all digits” “Hour invalid”
To (minute)	“Entry must be all digits” “Minute invalid”
Cabinet:	"Invalid entry"

Port Network:	"Port Network invalid"
Board Number:	"Invalid entry"
Port:	"Port invalid"
Category:	“”xxxxxxxx” is an invalid entry; please press HELP”
Extension:	“Entry must be all digits” “Extension not assigned”
Trunk (group)	“Entry must be all digits” “Group not assigned, or group assigned but with no member”
Trunk (member)	“Entry must be all digits” “Number invalid” “Group member not assigned” “Trunk or trunk group invalid”

test analog-testcall

Help Messages

If the system technician presses HELP after entering “test analog-testcall” a message showing the following keywords appears:

```
trunk board     port
```

If the system technician presses HELP after entering “test analog-testcall trunk,” the following message appears:

```
Enter group number or group number/member number,
   ['full' or 'supervision' or   'no-selftest'
     or 'no-return-loss' or 'no-st-or-rl'],
         ['repeat 1-100'], ['schedule']
```

If the system technician presses HELP after entering “test analog-testcall port” the following message appears:

```
 Enter trunk port number ['full' or 'supervision'
       or 'no-selftest' or 'no-return-loss'
or 'no-st-or-rl'], ['repeat 1-100'], ['schedule']
```

If the system technician presses HELP after entering “test analog-testcall board” the following message appears:

```
Enter trunk board number, ['full' or 'supervision'
       or 'no-selftest' or 'no-return-loss'
or 'no-st-or-rl'], ['repeat 1-100'], ['schedule']
```

Error Messages

If the format for the trunk location is incorrect, the following message displays:

```
Format invalid
```

If the trunk group or member range is invalid, the following message displays:

```
Trunk or trunk group invalid
```

If the board is not inserted, the following message appears:

```
Board not inserted
```

If the specified board does not have any maintenance objects associated with it, the following message appears:

```
No MO in this board
```

If the EPN on which the board resides is not available, the following message appears:

```
EPN is not available
```

If there is a software communication problem, the following message displays:

```
Error encountered, can't complete request
```

If the trunk group is not administered, the following message displays:

```
Group not assigned, or group
assigned but with no member
```

If the trunk group member is not administered, the following message displays:

```
Group member not assigned
```

If no tests can be found for the associated MO, the following message appears:

```
No tests for this MO
```

If the command entered is in conflict with another currently executing command, then a message appears showing the login id of the conflicting user and the conflicting command. The message is as follows:

```
'login id':'command' has a command conflict
```

If during the execution of a command a resource problem occurs that requires the user to restart the command, then the following message appears:

```
Command resources busy;
Press CANCEL to clear, and then resubmit
```

If all of the available maintenance resources are currently in use, then the following message appears:

```
All maintenance resources busy; try again later
```

If the format for the board or port location is incorrect, the following message displays:

```
Port/Board invalid
```

test board

Help Messages

If the system technician presses HELP after entering “test board” the following message appears:

```
Enter board location, [’long’ or ’short’],
[’repeat’ (1-100) or ’clear’], [’schedule’]
```

Error Messages

If the format for the board location is incorrect, the following error message appears:

```
Port/Board invalid
```

If the EPN in which the specified board resides is not available, the following message appears:

```
EPN is not available
```

If the specified board is not configured in the system, the following message appears:

```
Board not assigned
```

If the request for all maintenance objects associated with the board fails, the following message appears:

```
No MO in this board
```

If no tests can be found for the associated MO, the following message displays:

```
No tests for this MO
```

If the specified board is a Switch Node Interface (SNI) board which resides on the active Port Network Connectivity (assuming PNC is duplicated) and a long test has been specified, the following message appears:

```
Must busyout specified object first
```

If the command entered is in conflict with another currently executing command, then a message appears showing the login id of the conflicting user and the conflicting command. The message is as follows:

```
’login id’:’command’ has a command conflict
```

If during the execution of a command a resource problem occurs that requires the user to restart the command, then the following message appears:

```
Command resources busy;
Press CANCEL to clear, and then resubmit
```

If all of the available maintenance resources are currently in use, then the following message appears:

```
All maintenance resources busy; try again later
```

test card-mem

Help Messages

If the system technician presses HELP after entering “test card-mem”, the following message appears for a simplex switch configuration:

```
Enter [’long’ or ’short’], [’repeat’ (1-100)
     or ’clear’], [’schedule’]
```

For a duplex switch configuration, the following message appears:

```
Enter [cabinet(1)];carrier(A-B), [’long’ or ’short’],
     [’repeat’ (1-100) or ’clear’], [’schedule’]
```

Error Messages

If the SPE is not active, the following message appears:

```
Command must be executed from active SPE
```

If the carrier entered is invalid, the following message appears:

```
“entered value” is an invalid identifier;
press RETURN to execute modified command
```

If the NETCON board is not TN777B, the following message appears:

```
Must install TN777B circuit pack
```

If the command entered is in conflict with another currently executing command, then a message appears showing the login id of the conflicting user and the conflicting command. The message is as follows:

```
’login id’:’command’ has a command conflict
```

If the standby is entering maintenance mode when this command is executed, then the following message appears:

```
Cannot interrupt Standby SPE while entering
    maintenance mode; please try later
```

If the standby SPE is not refreshed when this command is executed, then the following message appears:

```
Standby SPE memory not refreshed;
use the “refresh spe-standby” command.
```

If the standby SPE is not refreshed and the active SPE is hard selected via the SPE select switches when this command is executed, then the following message appears:

```
Active SPE locked via select switches;
Standby SPE memory not refreshed
```

If the standby SPE is busy with another task, then the following message appears

```
Standby SPE busy with another task;
for information use "status system 1"
```

If the standby SPE is not available when this command is executed, then the following message appears:

```
Standby SPE not available;
for information use "status system 1"
```

test cdr-link

Help Messages

If the system technician presses HELP after entering "test cdr-link" the following message appears:

```
Enter 'primary' or  'secondary'
```

If the system technician presses HELP after entering "test cdr-link primary" or "test cdr-link secondary" the following message appears:

```
Enter ['long' or 'short'],
['repeat' (1-100) or 'clear'], ['schedule']
```

Error Messages

If the link is not administered, the following error message appears:

```
Link not administered or not enabled
```

If no tests can be found for the link, the following message appears:

```
No tests for this MO
```

If the command entered is in conflict with another currently executing command, then a message appears showing the login id of the conflicting user and the conflicting command. The message is as follows:

```
'login id':'command' has a command conflict
```

If during the execution of a command a resource problem occurs that requires the user to restart the command, then the following message appears:

```
Command resources busy;
Press CANCEL to clear, and then resubmit
```

If all of the available maintenance resources are currently in use, then the following message appears:

```
All maintenance resources busy; try again later
```

test customer-alarm

Help Messages

If the system technician presses HELP after entering “test customer-alarm” on a simplex SPE system, the following message appears:

```
Enter [cabinet(1-3)],[’long’ or ’short’],
 [’repeat’(1-100) or ’clear’], [’schedule’]
```

If the system technician presses HELP after entering “test customer-alarm” on a duplex SPE system the following message appears:

```
For cabinet 1 enter [cabinet(1)];
carrier (A-B),[’long’ or ’short’],
[’repeat’(1-100) or ’clear’], [’schedule’]
For cabinet 2-3 enter cabinet(2-3),[’long’ or ’short’],
[’repeat’(1-100) or ’clear’], [’schedule’]
```

Error Messages

If the location identifier entered is not valid, the following message appears:

```
Command aborted; please try later
```

If the command entered is in conflict with another currently executing command, then a message appears showing the login id of the conflicting user and the conflicting command. The message is as follows:

```
’login id’:’command’ has a command conflict
```

test data-module

Help Messages

If the system technician presses HELP after entering “test data-module” the following message appears:

```
Enter extension, [’long’ or ’short’],
[’repeat’ (1-100) or ’clear’], [’schedule’]
```

Error Messages

If the extension format is invalid, the following error message would be displayed:

```
Extension invalid
```

If the extension is not administered, the following message appears:

```
Extension not assigned
```

If the object associated with the specified extension is not a data module or a data channel, the following message appears:

```
Extension exists but assigned to a different object
```

If the EPN that contains the data module port is not accessible, the following message appears:

```
EPN is not available
```

If the board that contains the data port is not configured in the system, the following message appears:

```
Board not assigned
```

If no tests can be found for the current MO, the following message appears:

```
No tests for this MO
```

If the command entered is in conflict with another currently executing command, then a message appears showing the login id of the conflicting user and the conflicting command. The message is as follows:

```
'login id':'command' has a command conflict
```

If during the execution of a command a resource problem occurs that requires the user to restart the command, then the following message appears:

```
Command resources busy;
Press CANCEL to clear, and then resubmit
```

If all of the available maintenance resources are currently in use, then the following message appears:

```
All maintenance resources busy; try again later
```

test ds1-loop

Help Messages

If the system technician presses HELP after entering “test ds1-loop” the following message appears:

```
Enter DS1 board location,
['cpe-loopback-jack-test-begin [number-of-bits bit-pattern]' or
 'far-csu-loopback-test-begin' or 'one-way-span-test-begin' or
    'end-loopback/span-test' or 'inject-single-bit-error' or
                 'ds1/csu-loopback-tests']
```

Error Messages

If the format for the board location is incorrect, the following error message appears:

```
Port/Board invalid
```

If the EPN in which the specified board resides is not available, the following message appears:

```
EPN is not available
```

If the specified board is not inserted in the system, the following message appears:

```
Board not inserted
```

If the command entered is in conflict with another currently executing command, then a message appears showing the login id of the conflicting user and the conflicting command. The message is as follows:

```
'login id':'command' has a command conflict
```

If during the execution of a command a resource problem occurs that requires the user to restart the command, then the following message appears:

```
Command resources busy; Press CANCEL to clear, and then resubmit
```

If all of the available maintenance resources are currently in use, then the following message appears:

```
All maintenance resources busy; try again later
```

If the “test ds1-loop” command is executed and the “Version” field on the “system-parameters customer-options” form is not V5 or later, then the following message appears:

```
G3 Version must be V5 or later
```

If the “test ds1-loop” command is executed on a circuit pack other than TN464F or TN767E or later DS1 board, then the following message appears:

```
Command valid for TN464F or TN767E or
  later release DS1 circuit packs
```

If the “inject-single-bit-error” parameter is selected, but no CPE Loopback Jack, far-end CSU, or one-way span test is active on the DS1 circuit pack, then the following message appears:

```
Parameter valid only if a loopback/span test is active on the DS1
```

test duplication-interface

Help Messages

If the system technician presses HELP after entering “test duplication-interface,” the following message appears:

```
Enter [network(1);carrier(A-B) [’long’ or ’short’],
     [’repeat’ (1-100) or ’clear’], [’schedule’]
```

Error Messages

For any system, if a user entered parameter is not among those listed in the “Parameters” section, the following message appears:

```
Entry invalid
```

If an invalid port network is specified, the following message appears:

```
Invalid port-network specified
```

If an invalid carrier is specified, the following message appears:

```
Invalid carrier specified
```

If the standby is entering maintenance mode when this command is executed, then the following message appears:

```
Cannot interrupt Standby SPE while entering
    maintenance mode; please try later
```

If the standby SPE is not refreshed when this command is executed, then the following message appears:

```
Standby SPE memory not refreshed;
use the “refresh spe-standby” command.
```

If the standby SPE is not refreshed and the active SPE is hard selected via the SPE select switches when this command is executed, then the following message appears:

```
Active SPE locked via select switches;
   Standby SPE memory not refreshed
```

If the standby SPE is busy with another task, then the following message appears:

```
Standby SPE busy with another task;
for information use “status system 1"
```

If the standby SPE is not available when this command is executed, then the following message appears:

```
Standby SPE not available;
for information use “status system 1"
```

If the command entered is in conflict with another currently executing command, then a message appears showing the login id of the conflicting user and the conflicting command. The message is as follows:

```
'login id':'command' has a command conflict
```

test environment

Help Messages

If the system technician presses HELP after entering “test environment,” the following message appears:

```
Enter [cabinet(1-3)],['long' or 'short'],
['repeat'(1-100) or 'clear'],['schedule']
```

Error Messages

If the entered cabinet location is greater than two characters or otherwise invalid, the following error message appears:

```
Identifier invalid
```

If the indicated EPN is not available, the following message appears:

```
EPN is not available
```

If the command entered is in conflict with another currently executing command, then a message appears showing the login id of the conflicting user and the conflicting command. The message is as follows:

```
'login id':'command' has a command conflict
```

test hardware-group

Help Messages

If the system technician presses HELP after entering “test hardware-group” the following message appears:

```
board cabinet carrier spe system
```

If the system technician presses HELP after entering “test hardware-group board” the following message appears:

```
Enter board location: [cabinet (1-3);
     carrier (A-E);slot(00-20)]
```

If the system technician presses HELP after entering “test hardware-group cabinet” the following message appears:

```
Enter cabinet (1-3)
```

If the system technician presses HELP after entering “test hardware-group carrier” the following message appears:

```
Enter carrier location:
['cabinet'(1-3)]; carrier (A-E)
```

If the system technician presses HELP after entering “test hardware-group system” the following message appears:

```
Entry is not required
```

If the system technician presses HELP after entering “test hardware-group spe” the following message appears:

```
Entry is not required
```

Error Messages

If there is another “test hardware-group” active the following message appears:

```
Command aborted - another hardware-group
test already in progress
```

If an “add station” command is entered for a non-customer translated port at the same time as it is being tested because of the “test hardware-group” command with the ’all-ports’ option the request to “add station” will fail and the following message appears:

```
Object in use; please try later
```

If an invalid physical location is specified with the “test hardware-group board” command the following message appears:

```
Board invalid
```

If an unassigned board is specified with the “test hardware-group board” command the following message appears:

```
Board not assigned
```

If an invalid carrier is specified with the “test hardware-group carrier” command the following message appears:

```
Invalid carrier specified
```

If an invalid cabinet is specified with the “test hardware-group cabinet” command the following message appears:

```
Invalid cabinet specified
```

If the command entered is in conflict with another currently executing command, then a message appears showing the login id of the conflicting user and the conflicting command. The message is as follows:

```
'login id':'command' has a command conflict
```

Field Help

Following are the help message that the system technician will see upon tabbing to the specified field and pressing the HELP key.

Test sequence	Enter short or long
Test Repetition	Enter repeat or continuously
count:	Enter repeat number between 1-99
Auto-page?	n(o) y(es)
Background?	n(o) y(es)
Failures?	n(o) y(es)
All-ports?	n(o) y(es)
SPE-interchange?	n(o) y(es)

Field Error Message

Following are the error message that appears on the screen. The message are displayed when the system technician tabs out of a field and the validation routines are executed. In the following messages, an “x” represents what was entered by the user.

Test sequence	"x" is an invalid entry, please press HELP
Test Repetition	"x" is an invalid entry, please press HELP
	"x" The background option cannot be chosen with continuous testing
count:	Entry must be all digits
	Entry out of range
Auto-page?	"x" is an invalid entry, please press HELP
	"x" The auto-page and background options may not both be activated
Background?	"x" is an invalid entry, please press HELP
	"x" The background option cannot be chosen with continuous testing
	"x" The auto-page and background options may not both be activated
Failures?	"x" is an invalid entry, please press HELP
All-ports?	"x" is an invalid entry, please press HELP
SPE-interchange?	"x" is an invalid entry, please press HELP

test inads-link

Help Messages

If the system technician presses HELP after entering “test inads-link” the following message appears:

```
['1' or '2']
```

If the command entered is in conflict with another currently executing command, then a message appears showing the login id of the conflicting user and the conflicting command. The message is as follows:

```
'login id':'command' has a command conflict
```

If during the execution of a command a resource problem occurs that requires the user to restart the command, then the following message appears:

```
Command resources busy;
Press CANCEL to clear, and then resubmit
```

If all of the available maintenance resources are currently in use, then the following message appears:

```
All maintenance resources busy; try again later
```

test interface

Help Messages

If the system technician presses HELP after entering “test interface” the following message appears:

```
Enter [cabinet(1)];carrier(A-B), pos(1-2),
  ['long' or 'short'], ['repeat' (1-100)
        or 'clear'], ['schedule']
```

Error Messages

If the specified carrier is not the active PE, the following message appears:

```
Command must be executed from active SPE
```

If the technician-entered cabinet and carrier is invalid for a PPN, the following message appears:

```
Invalid port-network specified
```

If the technician-entered carrier is not a valid carrier, the following message appears:

```
Invalid carrier specified
```

If the technician-entered carrier is not active, the following error message will be entered:

```
Board invalid
```

If the specified carrier/position processor interface circuit pack is not inserted, but the specified carrier is active, the following error message appears:

```
No such MO's lname/pname
```

If the command entered is in conflict with another currently executing command, then a message appears showing the login id of the conflicting user and the conflicting command. The message is as follows:

```
'login id':'command' has a command conflict
```

If the standby is entering maintenance mode when this command is executed, then the following message appears:

```
Cannot interrupt Standby SPE while entering
    maintenance mode; please try later
```

If the standby SPE is not refreshed when this command is executed, then the following message appears:

```
Standby SPE memory not refreshed;
use the "refresh spe-standby" command.
```

If the standby SPE is not refreshed and the active SPE is hard selected via the SPE select switches when this command is executed, then the following message appears:

```
Active SPE locked via select switches;
Standby SPE memory not refreshed
```

If the standby SPE is busy with another task, then the following message appears:

```
Standby SPE busy with another task;
for information use "status system 1"
```

If the standby SPE is not available when this command is executed, then the following message appears:

```
Standby SPE not available;
for information use "status system 1"
```

If during the execution of a command a resource problem occurs that requires the user to restart the command, then the following message appears:

```
Command resources busy;
Press CANCEL to clear, and then resubmit
```

If all of the available maintenance resources are currently in use, then the following message appears:

```
All maintenance resources busy; try again later
```

test isdn-testcall

Help Messages

If the system technician presses HELP after entering “test isdn-testcall” the following message appears:

```
Enter group #/member # [’minutes’ (1-120)],
[’schedule’]
```

Error Messages

If the specified format of the trunk location is incorrect, the following message appears:

```
Format invalid
```

If the specified trunk group or member range is invalid, the following message appears:

```
Trunk or trunk group invalid
```

If a trunk group and member is not specified, the following message appears:

```
Must specify group/member pair
```

If the specified trunk group is not administered or has no members administered, the following message appears:

```
Group not assigned, or group assigned
but with no member
```

If the specified trunk group member is not administered, the following message appears:

```
Group member not assigned
```

If the specified trunk is not an ISDN-PRI trunk, the following message appears:

```
Invalid non ISDN-PRI trunk specified
```

If no tests can be found for the associated MO, the following message appears:

```
No tests for this MO
```

If an ISDN-PRI test call has already been started, the following message appears:

```
There is a test call already in progress
```

If the software data cannot be sent to the SAT, the following message appears:

```
Error encountered, can’t complete request
```

If the command entered is in conflict with another currently executing command, then a message appears showing the login id of the conflicting user and the conflicting command. The message is as follows:

```
'login id':'command' has a command conflict
```

If during the execution of a command a resource problem occurs that requires the user to restart the command, then the following message appears:

```
Command resources busy;
Press CANCEL to clear, and then resubmit
```

If all of the available maintenance resources are currently in use, then the following message appears:

```
All maintenance resources busy; try again later
```

test journal-printer

Help Messages

If the system technician presses HELP after entering “test journal-printer”, the following object command word choices appears:

```
pms-log    wakeup-log
```

Error Messages

If the link is not administered, the following error message appears:

```
Link not administered or not enabled
```

If no tests can be found for the link, the following message appears:

```
No tests for this MO
```

If the command entered is in conflict with another currently executing command, then a message appears showing the login id of the conflicting user and the conflicting command. The message is as follows:

```
'login id':'command' has a command conflict
```

If during the execution of a command a resource problem occurs that requires the user to restart the command, then the following message appears:

```
Command resources busy;
Press CANCEL to clear, and then resubmit
```

If all of the available maintenance resources are currently in use, then the following message appears:

```
All maintenance resources busy; try again later
```

test led

Help Messages

If the system technician presses HELP after entering “test led” the following message appears:

```
Enter [’all’ or ’cabinet’ (1-3)],
[’long’ or ’short’ ], [’repeat’ (1-100)]
```

Error Messages

If there is an error in the input to the command, where “x” is the invalid input, the following message appears:

```
“x” is an invalid identifier;
press RETURN to execute modified command
```

If the command entered is in conflict with another currently executing command, then a message appears showing the login id of the conflicting user and the conflicting command. The message is as follows:

```
’login id’:’command’ has a command conflict
```

test link

Help Messages

If the system technician presses HELP after entering “test link” the following message appears:

```
Enter link number(1-8), [’long’ or ’short’],
  [’repeat’ (1-100) or ’clear’], [’schedule’]
```

Error Messages

If the link number is not within the valid range, then the following error message appears:

```
Link out of range, please press HELP
```

If the link has not been administered, then the following message appears:

```
Link not administered or not enabled
```

If there are no tests for the current MO, the following message appears:

```
No tests for this MO
```

If the command entered is in conflict with another currently executing command, then a message appears showing the login id of the conflicting user and the conflicting command. The message is as follows:

```
’login id’:’command’ has a command conflict
```

If during the execution of a command a resource problem occurs that requires the user to restart the command, then the following message appears:

```
Command resources busy;
Press CANCEL to clear, and then resubmit
```

If all of the available maintenance resources are currently in use, then the following message appears:

```
All maintenance resources busy; try again later
```

test maintenance

Help Messages

If the system technician presses HELP after entering “test maintenance”, the following message appears:

```
Enter [cabinet(2-3)];carrier(A)],
['long' or 'short'],   ['repeat'(1-100)
or 'clear'], ['schedule']
```

Error Messages

For any system, if the entered value is invalid, the following message appears:

```
Identifier invalid
```

If the port network specified is not available, the following message appears:

```
EPN is not available
```

If the command entered is in conflict with another currently executing command, then a message appears showing the login id of the conflicting user and the conflicting command. The message is as follows:

```
'login id':'command' has a command conflict
```

test memory

Help Messages

If the system technician presses HELP after entering “test memory” on a simplex SPE system the following message appears:

```
Enter [cabinet(1)];carrier(A),
['long' or 'short'],   ['repeat' (1-100)
or 'clear'], ['schedule']
```

If the system technician presses HELP after entering “test disk” on a duplex SPE system the following message appears:

```
Enter [cabinet(1)];carrier(A-B),
['long' or 'short'],   ['repeat' (1-100)
or 'clear'], ['schedule']
```

Error Messages

For SPE duplex systems, if no carrier is entered on the command line, the following message appears:

```
A carrier must be specified for duplex systems
```

For any system, if the length of the user entered parameter exceeds five (5), the following message appears:

```
Entry invalid
```

On any system, if any cabinet other than “1” or “01” is specified, the following message appears:

```
Only cabinet '1' may be specified for this command
```

If a carrier is entered which is not valid for the current system configuration (for example, anything other than “A” or “B” for SPE duplex and anything other than the ’a’ carrier for SPE simplex), the following message appears:

```
Carrier out of range;
Enter 'a' if SPE simplex, 'a' or 'b' if SPE duplex
```

If the standby SPE was specified, and it does not respond, the following message appears:

```
Standby SPE not available;
for information use 'status system'
```

If an invalid position number is entered, the following message appears:

```
Board position is invalid
```

If a non administered circuit pack location is entered, the following message appears:

```
Memory Board not assigned
```

If the command entered is in conflict with another currently executing command, then a message appears showing the login id of the conflicting user and the conflicting command. The message is as follows:

```
'login id':'command' has a command conflict
```

If during the execution of a command a resource problem occurs that requires the user to restart the command, then the following message appears:

```
Command resources busy;
Press CANCEL to clear, and then resubmit
```

If all of the available maintenance resources are currently in use, then the following message appears:

```
All maintenance resources busy; try again later
```

test modem-pool

Help Messages

If the system technician presses HELP after entering “test modem-pool” the following message appears:

```
Enter group #(1-5) or group #/member #,
['long' or 'short'], ['repeat' (1-100)],
['schedule'] or press CANCEL to cancel the command
```

Error Messages

If the “test modem-pool” command is entered from a login for which the command is not valid, then the following message appears:

```
"test" is an invalid entry; please press HELP
```

If the group or member numbers entered are not digits, then the following message appears:

```
Identifier invalid
```

If the group number or member number entered is not within the valid range of groups or members, the following message appears:

```
Boards not assigned
```

If the group is not administered or is administered but with no members, the following message appears:

```
Group not assigned, or group
assigned but with no member
```

If the a member is assigned, but the port is does not exist in the system, then the following message appears:

```
Port not assigned
```

If there are no tests found for the maintenance object, the following message appears:

```
No tests for this MO
```

If the command entered is in conflict with another currently executing command, then a message appears showing the login id of the conflicting user and the conflicting command. The message is as follows:

```
'login id':'command' has a command conflict
```

If during the execution of a command a resource problem occurs that requires the user to restart the command, then the following message appears:

```
Command resources busy;
Press CANCEL to clear, and then resubmit
```

If all of the available maintenance resources are currently in use, then the following message appears:

```
All maintenance resources busy; try again later
```

test network-control

Help Messages

If the system technician presses HELP after entering “test network-control” the following message appears for a simplex switch configuration:

```
Enter [’long’ or ’short’], [’repeat’ (1-100)
or ’clear’], [’schedule’]
```

For a duplex switch configuration, the following message appears:

```
Enter [cabinet(1)];carrier(A-B),
[’long’ or ’short’], [’repeat’ (1-100)
or ’clear’], [’schedule’]
```

Error Messages

If the SPE is not active, the following message appears:

```
Command must be executed from active SPE
```

If the carrier entered is invalid, the following message appears:

```
“entered value” is an invalid identifier;
press RETURN to execute modified command
```

If the NETCON board is not TN777B, the following message appears:

```
Must install TN777B circuit pack
```

If the entered standby carrier cannot be retrieved, the following message appears:

```
Error encountered, can’t complete request
```

If there aren’t any tests found for this MO, the following message appears:

```
No tests for this MO
```

If the command entered is in conflict with another currently executing command, then a message appears showing the login id of the conflicting user and the conflicting command. The message is as follows:

```
’login id’:’command’ has a command conflict
```

If during the execution of a command a resource problem occurs that requires the user to restart the command, then the following message appears:

```
Command resources busy;
Press CANCEL to clear, and then resubmit
```

If all of the available maintenance resources are currently in use, then the following message appears:

```
All maintenance resources busy; try again later
```

If the standby is entering maintenance mode when this command is executed, then the following message appears:

```
Cannot interrupt Standby SPE while entering
maintenance mode; please try later
```

If the standby SPE is not refreshed when this command is executed, then the following message appears:

```
Standby SPE memory not refreshed;
use the "refresh spe-standby" command.
```

If the standby SPE is not refreshed and the active SPE is hard selected via the SPE select switches when this command is executed, then the following message appears:

```
Active SPE locked via select switches;
Standby SPE memory not refreshed
```

If the standby SPE is busy with another task, then the following message appears:

```
Standby SPE busy with another task;
for information use "status system 1"
```

If the standby SPE is not available when this command is executed, then the following message appears:

```
Standby SPE not available;
for information use "status system 1"
```

test packet-control

Help Messages

If the system technician presses HELP after entering "test packet-control", the following message appears:

```
Enter [cabinet(1)]; carrier (A-B),
['long' or 'short'], ['repeat' (1-100)
or 'clear'], ['schedule']
```

Error Messages

If this command is executed on the standby SPE and this SPE is busy at the moment, the following appears:

```
Standby SPE busy;
See status system for more details
```

If during the execution of a command a resource problem occurs that requires the user to restart the command, then the following message appears:

```
Command resources busy;
Press CANCEL to clear, and then resubmit
```

If all of the available maintenance resources are currently in use, then the following message appears:

```
All maintenance resources busy; try again later
```

test pkt

Help Messages

If the system technician presses HELP after entering “test pkt” the following message appears:

```
Enter ’port-network’, port network number (1-3),
     [’long’ or ’short’], [’repeat’ (1-100)
            or ’clear’], [’schedule’]
```

Error Messages

If the technician does not enter all digits for the port-network number, the following message appears:

```
Entry must be all digits
```

If the port network on which the desired Packet bus resides is unavailable, the following message appears:

```
EPN is not available
```

For any system, if the length of the user entered parameter “port network” exceeds 3 the following message appears:

```
Entry invalid
```

If the packet bus is not activated the following message appears:

```
Packet Bus is not activated,
check system-parameters maintenance form
```

If no tests can be found for the associated MO, the following message appears:

```
No tests for this MO
```

If the software data cannot be sent to the SAT, the following message appears:

```
Error encountered, can't complete request
```

If the command entered is in conflict with another currently executing command, then a message appears showing the login id of the conflicting user and the conflicting command. The message is as follows:

```
'login id':'command' has a command conflict
```

If during the execution of a command a resource problem occurs that requires the user to restart the command, then the following message appears:

```
Command resources busy;
Press CANCEL to clear, and then resubmit
```

If all of the available maintenance resources are currently in use, then the following message appears:

```
All maintenance resources busy; try again later
```

test pms-link

Help Messages

If the system technician presses HELP after entering "test pms-link" the following message appears:

```
Enter ['long' or 'short'],
['repeat' (1-100) or 'clear'], ['schedule']
```

Error Messages

If the link is not administered, the following error message appears:

```
Link not administered or not enabled
```

If no tests can be found for the link, the following message appears:

```
No tests for this MO
```

If the command entered is in conflict with another currently executing command, then a message appears showing the login id of the conflicting user and the conflicting command. The message is as follows:

```
'login id':'command' has a command conflict
```

If during the execution of a command a resource problem occurs that requires the user to restart the command, then the following message appears:

```
Command resources busy;
Press CANCEL to clear, and then resubmit
```

If all of the available maintenance resources are currently in use, then the following message appears:

```
All maintenance resources busy; try again later
```

test port

Help Messages

If the system technician presses HELP after entering “test port” the following message appears:

```
Enter port location, [’long’ or ’short’],
[’repeat’ (1-100) or ’clear’], [’schedule’]
```

Error Messages

If the format for the port location is incorrect, the following error message appears:

```
Port/Board invalid
```

If the EPN on which the port resides is not accessible, the following message appears:

```
EPN is not available
```

If the board on which the port resides is not configured in the system, the following message appears:

```
Port not assigned
```

If there are no tests found for this maintenance object, the following message appears:

```
No tests for this MO
```

If the command entered is in conflict with another currently executing command, then a message appears showing the login id of the conflicting user and the conflicting command. The message is as follows:

```
’login id’:’command’ has a command conflict
```

If during the execution of a command a resource problem occurs that requires the user to restart the command, then the following message appears:

```
Command resources busy;
Press CANCEL to clear, and then resubmit
```

If all of the available maintenance resources are currently in use, then the following message appears:

```
All maintenance resources busy; try again later
```

test pri-endpoint

Help Messages

If the user presses HELP after entering “test pri-endpoint”, the following message appears:

```
Enter extension number, [’long’ or ’short’],
[’repeat’ (1-100)], [’schedule’]
```

Error Messages

If the format for the extension is incorrect, the following error message appears:

```
Extension invalid
```

If the EPN on which the PRI endpoint resides is not accessible, the following message appears:

```
EPN is not available
```

If the extension is not administered, the following message appears:

```
Extension not assigned
```

If the object associated with the specified extension is not a PRI endpoint, the following message appears:

```
Extension assigned to object other than pri-endpoint
```

If the board that contains the PRI endpoint is not inserted in the system, the following message appears:

```
Board not inserted
```

If the command entered is in conflict with another currently executing command, then a message appears showing the login id of the conflicting user and the conflicting command. The message is as follows:

```
’login id’:’command’ has a command conflict
```

If during the execution of a command a resource problem occurs that requires the user to restart the command, then the following message appears:

```
Command resources busy;
Press CANCEL to clear, and then resubmit
```

If all of the available maintenance resources are currently in use, then the following message appears:

```
All maintenance resources busy; try again later
```

test processor

Help Messages

If the system technician presses HELP after entering “test processor” on a simplex SPE system the following message appears:

```
Enter [’long’ or ’short’],
[’repeat’(1-100) or ’clear’], [’schedule’]
```

If the system technician presses HELP after entering “test processor” on a duplex SPE system the following message appears:

```
Enter [cabinet(1)];carrier(A-B),
[’long’ or ’short’],
[’repeat’(1-100) or ’clear’], [’schedule’]
```

Error Messages

For SPE duplex systems, if no carrier is entered on the command line, the following message appears:

```
A carrier must be specified for duplex systems
```

For any system, if the length of the user entered parameter exceeds three (3), the following message appears:

```
Entry invalid
```

On any system, if any cabinet other than “1” or “01” is specified, the following message appears:

```
Only cabinet ’1’ may be specified for this command
```

If a carrier is entered which is not valid for the current system configuration (for example, anything other than “A” or “B” for SPE duplex and anything other than the ’a’ carrier for SPE simplex), the following message appears:

```
Carrier out of range;
Enter ’a’ if SPE simplex, ’a’ or ’b’ if SPE duplex
```

If the standby SPE was specified, and it does not respond, the following message appears:

```
Standby SPE not available;
for information use ’status system’
```

If the command entered is in conflict with another currently executing command, then a message appears showing the login id of the conflicting user and the conflicting command. The message is as follows:

```
’login id’:’command’ has a command conflict
```

If during the execution of a command a resource problem occurs that requires the user to restart the command, then the following message appears:

```
Command resources busy;
Press CANCEL to clear, and then resubmit
```

If all of the available maintenance resources are currently in use, then the following message appears:

```
All maintenance resources busy; try again later
```

test shadow-link

Help Messages

If the system technician presses HELP after entering “test shadow-link” the following message appears:

```
Enter [’long’ or ’short’],
[’repeat’ (1-100) or ’clear’], [’schedule’]
```

Error Messages

If the command entered is in conflict with another currently executing command, then a message appears showing the login id of the conflicting user and the conflicting command. The message is as follows:

```
’login id’:’command’ has a command conflict
```

If the standby is entering maintenance mode when this command is executed, then the following message appears:

```
Cannot interrupt Standby SPE while entering
maintenance mode; please try later
```

If the standby SPE is not refreshed when this command is executed, then the following message appears:

```
Standby SPE memory not refreshed;
use the “refresh spe-standby” command.
```

If the standby SPE is not refreshed and the active SPE is hard selected via the SPE select switches when this command is executed, then the following message appears:

```
Active SPE locked via select switches;
Standby SPE memory not refreshed
```

If the standby SPE is busy with another task, then the following message appears

```
Standby SPE busy with another task;
for information use “status system 1"
```

If the standby SPE is not available when this command is executed, then the following message appears:

```
Standby SPE not available;
for information use "status system 1"
```

test signaling-group

Help Messages

If the system technician presses HELP after entering "test signaling-group", the following appears:

```
Enter group identifier (1-8), ['long' or 'short'],
    ['repeat' (1-100) or 'clear'], ['schedule']
```

Error Messages

If the specified group identifier is non numeric or out of range, the following message appears:

```
Signaling group invalid
```

If the specified group identifier is not administered, the following message appears:

```
No signaling group assigned
```

If no tests can be found for the associated MO, the following message appears:

```
No tests for this MO
```

If the software data cannot be sent to the SAT, the following message appears:

```
Error encountered, can't complete request
```

If during the execution of a command a resource problem occurs that requires the user to restart the command, then the following message appears:

```
Command resources busy;
Press CANCEL to clear, and then resubmit
```

If all of the available maintenance resources are currently in use, then the following message appears:

```
All maintenance resources busy; try again later
```

test sp-link

Help Messages

If the system technician presses HELP after entering “test sp-link”, the following appears:

```
Enter [’long’ or ’short’], [’schedule’]
```

Error Messages

If the system printer link is not administered, the following message appears:

```
Link not administered or not enabled
```

If during the execution of a command a resource problem occurs that requires the user to restart the command, then the following message appears:

```
Command resources busy;
Press CANCEL to clear, and then resubmit
```

If all of the available maintenance resources are currently in use, then the following message appears:

```
All maintenance resources busy; try again later
```

test spe-standby

Help Messages

If the system technician presses HELP after entering “test spe-standby” the following message appears:

```
Enter [’long’ or ’short’],
[’repeat’ (1-100) or ’clear’], [’schedule’]
```

Error Messages

If the command entered is in conflict with another currently executing command, then a message appears showing the login id of the conflicting user and the conflicting command. The message is as follows:

```
’login id’:’command’ has a command conflict
```

If the standby is entering maintenance mode when this command is executed, then the following message appears:

```
Cannot interrupt Standby SPE while entering
    maintenance mode; please try later
```

If the standby SPE is not refreshed when this command is executed, then the following message appears:

```
Standby SPE memory not refreshed;
use the "refresh spe-standby" command.
```

If the standby SPE is not refreshed and the active SPE is hard selected via the SPE select switches when this command is executed, then the following message appears:

```
Active SPE locked via select switches;
Standby SPE memory not refreshed
```

If the standby SPE is busy with another task, then the following message appears:

```
Standby SPE busy with another task;
for information use "status system 1"
```

If the standby SPE is not available when this command is executed, then the following message appears:

```
Standby SPE not available;
for information use "status system 1"
```

test station

Help Messages

If the system technician presses HELP after entering "test station" the following message appears:

```
Enter extension, ['long' or 'short'],
['repeat' (1-100) or 'clear'], ['schedule']
```

Error Messages

If the format for the extension is incorrect, the following error message appears:

```
Extension invalid
```

If the EPN on which the port resides is not accessible, the following message appears:

```
EPN is not available
```

If the extension is not administered, the following message appears:

```
Extension not assigned
```

If the object associated with the specified extension is not a station, the following message appears:

```
Extension exists but assigned to a different object
```

If the board that contains the port is not inserted in the system, the following message appears:

```
Board not assigned
```

If the command entered is in conflict with another currently executing command, then a message appears showing the login id of the conflicting user and the conflicting command. The message is as follows:

```
'login id':'command' has a command conflict
```

If during the execution of a command a resource problem occurs that requires the user to restart the command, then the following message appears:

```
Command resources busy;
Press CANCEL to clear, and then resubmit
```

If all of the available maintenance resources are currently in use, then the following message appears:

```
All maintenance resources busy; try again later
```

test synchronization

This command updates all the boards involved with synchronization.

Help Messages

If the system technician presses HELP after entering “test synchronization”, the following message appears:

```
Enter ['long' or 'short'], ['repeat' (1-100)
or 'clear'], ['schedule']
```

Error Messages

If there are no tests found for synchronization maintenance object, the following message appears:

```
No tests for this MO
```

If the command entered is in conflict with another currently executing command, then a message appears showing the login id of the conflicting user and the conflicting command. The message is as follows:

```
'login id':'command' has a command conflict
```

If during the execution of a command a resource problem occurs that requires the user to restart the command, then the following message appears:

```
Command resources busy; Press CANCEL to clear, and then resubmit
```

If all of the available maintenance resources are currently in use, then the following message appears:

```
All maintenance resources busy; try again later
```

test tdm

Help Messages

If the system technician presses HELP after entering “test tdm” the following message appears:

```
Enter ’port-network’, port network number (1-3),
[’long’ or ’short’], [’repeat’ (1-100) or ’clear’], [’schedule’]
```

Error Messages

If the technician does not enter all digits for the port-network number, the following message appears:

```
Entry must be all digits
```

If the technician enters a Port Network number that is not administered, the following message appears:

```
Port Network number not assigned
```

If the port network on which the desired TDM bus resides is unavailable, the following message appears:

```
EPN is not available
```

If the command entered is in conflict with another currently executing command, then a message appears showing the login id of the conflicting user and the conflicting command. The message is as follows:

```
’login id’:’command’ has a command conflict
```

If during the execution of a command a resource problem occurs that requires the user to restart the command, then the following message appears:

```
Command resources busy; Press CANCEL to clear, and then resubmit
```

If all of the available maintenance resources are currently in use, then the following message appears:

```
All maintenance resources busy; try again later
```

test tone-clock

Help Messages

If the system technician presses HELP after entering “test tone-clock” the following message appears:

```
Enter [[cabinet(1-3)];carr(A-B)],['long' or 'short'],
      ['repeat' (1-100) or 'clear'], ['schedule']
```

Error Messages

If an identifier greater than 3 (three) characters is entered, or the cabinet entered is not a digit (number), the following message appears:

```
Identifier invalid
```

If the carrier entered is invalid, the following message appears:

```
Invalid carrier specified
```

If the cabinet entered is not within the valid range of cabinets or the cabinet is not administered, the following message appears:

```
Cabinet number not assigned
```

If there is no tone/clock board at the specified location, one of the following messages appears:

```
Board not inserted
Board not assigned
```

If the specified cabinet carrier location is that of a switch node, the following message appears:

```
Switch Node carrier specified; invalid command for SN carrier
```

If the cabinet carrier location entered is that of an EPN that is not available, the following message appears:

```
EPN is not available
```

If the command entered is in conflict with another currently executing command, then a message appears showing the login id of the conflicting user and the conflicting command. The message is as follows:

```
'login id':'command' has a command conflict
```

If during the execution of a command a resource problem occurs that requires the user to restart the command, then the following message appears:

```
Command resources busy; Press CANCEL to clear, and then resubmit
```

If all of the available maintenance resources are currently in use, then the following message appears:

```
All maintenance resources busy; try again later
```

test trunk

Help Messages

If the system technician presses HELP after entering “test trunk” the following message appears:

```
Enter group # or group #/member #, [’long’ or ’short’],
      [’repeat’ (1-100) or ’clear’], [’schedule’]
```

Error Messages

If the format for the trunk location is incorrect, the following error message would be displayed:

```
Format invalid
```

If the trunk group or member range is invalid, the following message appears:

```
Trunk or trunk group invalid
```

If a software fault is encountered while the command is executing, the following message appears:

```
Error encountered, can’t complete request
```

If the trunk group is not administered, the following message appears:

```
Group not assigned, or group assigned but with no member
```

If the trunk group member is not administered, the following message appears:

```
Group member not assigned
```

If there are no tests found for this maintenance object, the following message appears:

```
No tests for this MO
```

If the command entered is in conflict with another currently executing command, then a message appears showing the login id of the conflicting user and the conflicting command. The message is as follows:

```
’login id’:’command’ has a command conflict
```

If during the execution of a command a resource problem occurs that requires the user to restart the command, then the following message appears:

```
Command resources busy;
Press CANCEL to clear, and then resubmit
```

If all of the available maintenance resources are currently in use, then the following message appears:

```
All maintenance resources busy; try again later
```

test tsc-administered

Help Messages

If the system technician presses HELP after entering “test tsc-administered” the following message appears:

```
Enter group # (1-8) or group #, [/tsc index (1-64)],
[’repeat’ (1-100)], [’schedule’]
```

Error Messages

If the format for the specified signaling group or the signaling group and TSC is incorrect, the following message appears:

```
Format invalid
```

If the specified signaling group number is out of range, the following message appears:

```
Signaling group invalid
```

If the specified signaling group is not administered, the following message appears:

```
No signaling group assigned
```

If the specified signaling group has no TSC assigned or the specified TSC is unadministered, the following message appears:

```
No TSC assigned
```

If the specified TSC number is out of range, the following message appears:

```
Tsc index invalid
```

If the software data cannot be sent to the SAT, the following message appears:

```
Error encountered, can’t complete request
```

If no tests can be found for the associated MO, the following message appears:

```
No tests for this MO
```

If the command entered is in conflict with another currently executing command, then a message appears showing the login id of the conflicting user and the conflicting command. The message is as follows:

```
’login id’:’command’ has a command conflict
```

If during the execution of a command a resource problem occurs that requires the user to restart the command, then the following message appears:

```
Command resources busy;
Press CANCEL to clear, and then resubmit
```

If all of the available maintenance resources are currently in use, then the following message appears:

```
All maintenance resources busy; try again later
```

traceroute

This command provides the ability to trace the route of packets originated from DEFINITY IP boards through the LAN. The output shows the ip address of each router or host (hop) that the packets encounter and the time elapsed between each hop. If a DEFINITY IP board has trouble communicating with a far-end device, the traceroute command can determine “how far” packets get toward the destination.

DEFINITY IP boards include:

- TN799B (or later suffix) CLAN board
- TN802B Medpro board

The output form lists:

- Hops traversed from source to destination
- IP addresses of the hop points and the final destination
- Observed round-trip delay from the source to each hop point

If no reply is received from a potential hop point, the `IP Address` field contains stars (*), which indicates a timeout condition.

The primary use of this command is to determine quickly and unambiguously if the fault lies within Avaya-provided equipment or if the fault is with the LAN or LAN administration to which the Avaya DEFINITY Server is connected.

Action/ Object	Qualifier	Qualifier Description	Permissions	Defaults	Feature Interactions
traceroute	***ip-address***	where IP address is www.xxx.yyy.zzz	init inads craft customer	Primary	None
	node-name	from node-name form			
	board	cabinet-carrier-slot address of the IP circuit pack			
	clan-port	port 1-17			
		Example: **traceroute ip-address 123.4.56.789 board 1C14**			

Output

The following shows an example output for the C-LAN **traceroute** command. For Medpro or Prowler boards, the **clan-port (1-17)** qualifier does not appear.

```
traceroute ip-address 135.9.1.22 board 1C14  clan-port (1-17)

                            TRACE ROUTE RESULTS

Hop             Time(ms)            IP Address

0               from address        135.9.1.22
1               03,10,05            134.9.14.23
2               11,20,03            134.9.5.103
3               22,01,25            106.245.27.205
4               22,01,25 !N         106.245.27.205
```

Field descriptions

`clan-port` This CLAN entry identifies the port on the CLAN board from which the traceroute command is issued. This field appears *only* if the board is a CLAN board.

`Hop` The node number (in sequence). The first node (0) is the address from which the traceroute command is issued.

`Time (ms)` Time from the board to each intermediate destination in milliseconds. If an error occurs at a node, the entry is repeated with an error code immediately following the time. Error codes and their meanings are:

- ! Unable to reach port
- !N Unable to reach network
- !H Unable to reach host
- !P Failure between endpoints
- !F Need fragmentation of data packet
- !S Source return failure
- !X Packet blocked by filter

`IP Address` The 32-bit network address.

upgrade software

Help Messages

If the system technician presses HELP after entering “upgrade software,” the following message appears:

```
Entry is not required
```

If no card-mem is loaded into the system, the following message appears:

```
Software card-mem is not inserted in the system
```

If a wrong card-mem is loaded into the system, the following message appears:

```
Incorrect card-mem loaded; insert software card-mem
```

If the directory information on the software card-mem is corrupted or the card-mem is not formatted properly, the following message appears:

```
Software card-mem not readable; try another card-mem
```

If this command is in conflict with another currently executing command, then a message appears showing the login id of the conflicting user and the conflicting command. The message is as follows:

```
'login id':'command' has a command conflict
```

If the checksum on the software card-mem is bad, the following message appears:

```
Bad checksum on software card-mem; try another card-mem
```

If the software upgrade failed in the standby SPE, the following message appears:

```
No response on upgrade status from standby SPE, command failed
```

If the software card-mem in the standby SPE is not replaced with a translation card-mem within 2 minutes, the following message appears:

```
No translation card-mem inserted
in the standby SPE, command aborted
```

If the flash text checksum failed after the standby upgrade, the following message appears:

```
Standby SPE text checksum failed, command aborted
```

If the software card-mem is not inserted in the active SPE within 2 minutes after the prompting string: “REPLACE TRANSLATION CARD-MEM ON <active carrier> WITH SOFTWARE CARD-MEM,” the command has to be retried again and the following message appears:

```
No software card-mem inserted in active SPE; command aborted
```

If the SPE-select switches are thrown to prevent the SPE-interchange during a software upgrade, the following message appears:

```
SPE select switches thrown; upgrade complete only on standby
```

If the standby SPE is not in the standby mode and is busy running tests, the following message appears:

```
Standby SPE busy with another task;
for information use 'status system'
```

If the standby SPE has not completed initialization, the following message appears:

```
Standby SPE memory not refreshed; Use 'refresh spe-standby'
```

If the active SPE cannot communicate with the standby SPE after the standby SPE is properly upgraded, the following message appears:

```
Upgrade failed; no communication with
  standby after new software booted
```

If the SPE-interchange failed and the new software cannot be run in the active SPE, the following message appears:

```
Software upgrade failed, could not perform an interchange
```

Index

Numerics

120A ICSU 5-63
2900/715 BCS 3-1
715 BCS 3-1

A

ACA, see Automatic Circuit Assurance
administration
  circuit packs 10-1841
  logins 3-9
  terminals 3-1
ADX12-BD 10-257
ADX8D-BD 10-257
ADX8D-RS 10-258
air filters 5-25
alarm logs 1-6, 10-1
Alarm Origination to OSS Numbers 8-36, A-19
alarms
  classifications 1-7
  error reporting 1-7
  logs 1-6, 3-2, 10-1
  major 1-7
  minor 1-7
  off-board 1-7
  on-board 1-7
  Terminal Alarm Notification 7-2
  warning 1-7
American National Standards Institute, see ANSI
analog
  carrier signal 1-12
analog port
  insertion loss 1-20
Analog Tie Trunk Back-to-Back testing 5-35
analog transmission by a modem 1-12
analog-to-analog
  echo path delay 1-23
  frequency response 1-19
  intermodulation distortion 1-21
  peak noise level 1-23
  quantization distortion loss 1-21
analog-to-digital
  coder/decoder 1-12
  frequency response 1-19
  intermodulation distortion 1-21
  peak noise level 1-23
  quantization distortion loss 1-22
announcements, recorded 5-20
ANSI 1-18
application protocols 1-16 to 1-23
Asynchronous Data Unit
  proprietary signal 1-12
ATM (Asynchronous Transfer Mode)
  B-channel 10-214
  circuit emulation service (CES) 10-214
  D-channel 10-214
  signaling group 10-214
  trunking 10-214
attendant consoles, LEDs 7-6
AUDIX circuit pack (ADXDP-BD) 10-15
AUDIX digital port (ADXDP-PT) 10-16
Automatic Circuit Assurance (ACA) 5-26
AXA12-BD 10-257
AXA12-RS 10-258
AXD12-RS 10-258

B

background tests 1-8
  fixed interval 1-8
  scheduled 1-8
batteries 5-25
Busy Verification of Terminals and Trunks 5-27

C

cabinets
  configurations 2-2
capabilities, system 1-9 to 1-23
carrier lead appearances
  110 cross-connect field 5-38
carrier power units, LEDs 7-6
CE marks 4
CEPT1 1-12
channel associated signaling (CAS) 10-1831
character code
  8-bit 1-12
characteristics, transmission 1-18 to 1-23
circuit packs
  administration 10-1841
  duplication 7-4
  duplication interface indicators 7-5
  failures on the packet bus 9-6
  Generic 3r 2-1
  maintenance 7-3
  Net Packet/Packet Interface 8-210, 8-212
  packet bus 9-1
  processor 7-3
  status LEDs 7-8
  TN2036 voltage range 5-50
  TN2182 10-1007, 10-1163
  TN2242 10-1831
  TN2305 10-214
  TN2306 10-214
  TN464 10-611

circuit packs, (continued)
TN464F 10-1831
TN722 10-611
TN767 10-611
TN768 10-1007, 10-1163, 10-1721
TN780 10-1721
TN802 MAPD 10-1037
TONE-BD, tone-clock 10-1007, 10-1163
tone-clock 10-1007, 10-1163
universal DS1 (UDS1) interface 10-611, 10-919, 10-1037, 10-1069, 10-1831
CLAN-BD 10-393
clocks, system 10-1007, 10-1163, 10-1721
CODEC 1-12
coder/decoder, analog-to-digital, see CODEC
codes
service 1-23
cold starts
with translations loading 4-3
without translations loading 4-3
commands
categories 3-10
companding 10-1787
Conference, Transfer, and Call-Forwarding Denial 1-16
configurations
cabinets 2-2
hardware 2-1
connectivity
rules 1-14
connectivity, packet bus 9-5
control and port circuit pack status LEDs 7-7
control carrier power units 5-10
control circuit packs
expansion port networks (EPNs) 5-4
PPN 5-2
replacing 5-2
reseating 5-2
unseating 5-2
Control LAN Circuit Pack 10-393
CO-trunk-to-digital interface frequency response 1-19
country codes 10-1787
cursor keys 3-2

D

data
service unit 1-11
Data Communications Equipment, see DCE
Data Line Circuit Pack 10-695
data terminal equipment 1-9
data-link layer, OSI 1-9
DCE 1-9
D-channel
protocol 1-9
DCP 1-11
DEC VT220 terminals 3-25
delay, echo path 1-23
demand tests 1-8
diagnostic tests 4-2
DIG-IP-STN 10-551
Digital IP Station 10-551
Digital Multiplexed Interface 1-12
digital port
insertion loss 1-20
Digital Signal Level 1 (DS1) 1-12
digital-to-analog
peak noise level 1-23
quantization distortion loss 1-22
digital-to-digital
echo path delay 1-23
Disconnect Supervision 1-15
display alarms command 4-8
display capacity 8-60
display communication interface 8-70
distortion
intermodulation 1-21
quantization loss 1-21
DS0 channels 10-1838
DS1
CO trunk (CO-DS1) 10-584
interface circuit packs 10-611, 10-919, 10-1037, 10-1069, 10-1831
option jumpers 10-1841
signaling 10-611
trunks 10-919, 10-1037, 10-1069, 10-1831
DS1 Interface Circuit Pack 10-611
DS1 loopback 5-58
DS1 span 5-59
DS1 span test 5-59
DS1 span, T1 5-58
DS1-BD 10-611
DSO frequency response 1-19
DSU, see Data Service Unit
DTE, see data terminal equipment
DT-LN-BD 10-695
duplication circuit packs 7-4
duplication interface 4-12
duplication interface circuit packs
indicators 7-5
LEDs 7-4
Duplication-Related System Parameters form 8-112

E

E&M mode tests 5-36
echo path delay 1-23
Echo-Return Loss 1-22
editing keys 3-2
EIA 1-18
electromagnetic compatibility standards 3, xxxiii
Electronic Industries Association, see EIA
enhanced integrated CSU 10-1840

ERL, see Echo-Return Loss
error
  control 1-9
error logs 1-6
error reporting 1-7
errors
  logs 1-6
  reporting 1-7
European conference of postal and telecommunications rate 1, see CEPT1
expansion interface circuit packs
  expansion port networks (EPNs) 5-4
expansion port networks (EPNs)
  control circuit packs 5-4
  expansion interface circuit packs 5-4

F

Facility Interface Code 1-24
Facility Test Calls 5-28
  system access tones 5-32
  System Tone Test Call 5-32
  Time Slot Test Call 5-30
  Touch-Tone (DTMF) Receiver Test Call 5-29
  Trunk Test Call 5-28
fan sub-assembly 5-18
fans 5-18
FCC 1-23
feature capacities 1-9 to 1-23
Federal Communications Commission, see FCC
FIC, see Facility Interface Code
First OSS Telephone Number 8-35, 8-114, A-18
flow control 1-9
frequency response
  analog-to-analog 1-19
  analog-to-digital 1-19

G

Global AC MCC (J58890CH) 10-1345

H

H.323 B-Channel 10-870
H.323 IP Station 10-880
H323-BCH 10-870
hardware
  configurations 2-1
  power 2-1
holdover battery 2-3

I

ID xxx
impedances
  loop in 1-22
  termination 1-22
Incomplete Command Time-out 10-343, 10-609
insertion loss 1-20
interface
  physical 1-11
intermodulation distortion 1-21
Internet Telephony Server (ITS-E) 10-1037
intervening switching systems 1-14
ISDN
  BRI definition 1-11
  D-channel treatment 1-9
  PRI definition 1-11
ISDN-PLK 10-941
ISDN-PRI
  DS0 channels 10-919, 10-1037, 10-1069, 10-1831
  troubleshooting 5-42
  troubleshooting test call problems 5-46

J

jacks, network 1-24
Japan Radio Corporation external converter 10-1832, 10-1833

K

keyboards 3-2
keys
  cursor 3-2
  DEC VT220 terminals 3-25
  editing 3-2
  transaction 3-2

L

layers, protocol 1-11
LEDs
  alarms 7-3
  attendant consoles 7-6
  carrier power units 7-6
  control and port circuit pack status 7-7
  definition 7-1
  duplication interface circuit pack 7-4

LEDs, (continued)
indicators on maintenance/processor circuit packs 7-3
maintenance circuit pack 7-3
power distribution units 7-6
processor circuit pack 7-3
LGATE-BD 10-259
License-Error Mode 10-1007
LIC-ERR (License-Error Mode) 10-1007
list configuration 8-139
list configuration license 8-143
list history 8-150
list ip-route 8-152
logging in 3-3
Login Administration screen 3-9
login IDs 3-3
login procedure 3-3
Login Prompt form 3-6
logins
administration 3-9
changing attributes 3-9
removing 3-6
testing 3-6
logoff screen 3-22
loop input impedances 1-22
loopback jack 5-58
loss
echo return 1-22
insertion 1-20
quantization distortion 1-21
single-frequency 1-22

M

Maintenance 10-1385
maintenance
architecture 1-1
background testing 1-8
circuit packs 7-3
interfaces 3-1
on-site 9-2
packet bus 9-8
packet bus software 9-9
preventative procedures 5-24
procedures 5-1
remote 9-2
subsystem 1-1
system's overall functions 1-1
testing 1-8
maintenance object repair procedures
ANL-16-L (16-Port Neon Analog Line) 10-63
ANL-BD (Analog Line Circuit Pack) 10-85
ANL-LINE (8-Port Analog Line), ANL-NE-L (8-Port Neon Analog Line) 10-86
ANN-BD (Announcement Circuit Pack) 10-111
ANNOUNCE (Announce) 10-166
ANN-PT (Announcement Port) 10-154
maintenance object repair procedures, (continued)
BRI-PORT (ISDN-BRI Port), ABRI-PORT (ASAI ISDN-BRI Port) 10-267
BRI-SET, ASAI-ADJ, BRI-DAT 10-292
CABINET (Cabinet Sensors) 10-323
CARR-POW (Carrier Port Power Unit) for DC-Powered Systems 10-377
CLSFY-BD (Call Classifier Circuit Pack) 10-411
CLSFY-PT (Call Classifier Port) 10-412
CO-BD (Central Office Trunk Circuit Pack) 10-418
CO-DS1 (DS1 CO Trunk) 10-419
CONFIG (System Configuration) 10-465
DID-BD (Direct Inward Dial Trunk Circuit Pack) 10-519
DID-DS1 (DS1 DID Trunk) 10-520
DID-TRK (DID Trunk) 10-532
DIG-BD (Digital Line Circuit Pack) 10-551
DIG-LINE (Digital Line) 10-551
DIOD-TRK (DIOD Trunk) [G1.2SE] 10-596
DTMR-PT [Dual Tone Multifrequency Port (TTR)] 10-696
ERR-LOG (Error Log) 10-739
ETR-PT (Enhanced Tone Receiver Port) 10-752
EXT-DEV ADMIN? Y (External Device Alarm) 10-822
HYB-LINE (Hybrid Line) 10-886
M/T-BD (Maintenance-Test Circuit Pack) [G3iV1.1-286, G3iV2-386] 10-1144
M/T-DIG (Maintenance-Test Digital Port) [G3iV1-1.286, G3iV2-386] 10-1145
M/T-PKT (Maintenance-Test Packet Bus Port) [G3iV1.1-286, G3iV2-386] 10-1158
MODEM-PT (Modem Pool Port) 10-1096
OPS-LINE (DS1 OPS Line) 10-1166
PDMODULE, TDMODULE (Data Module) 10-1182
RING-GEN (Analog Ring Generator) 10-1459
S-SYN-BD (Speech Synthesis Circuit Pack) 10-1468
S-SYN-PT (Speech Synthesis Port) 10-1469
SVC-SLOT (Service Slot) 10-1569
TIE-TRK (Tie Trunk) 10-1755
TONE-BD (Tone-Clock Circuit Pack) 10-1783
TONE-PT (Tone Generator) 10-1802
TSC-ADM (Administered Temporary Signaling Connections) [G3iV1.1-286, G3iV2-386] 10-1820
TTR-LEV (TTR Level) 10-1826
XXX-BD (Common Port Circuit Pack) 10-2001
maintenance objects (MOs)
definition 1-6
maintenance/test analog port (M/T-ANL) 10-1134
management terminals 3-1
Manager G3MT terminals 3-1
Manager I terminals 3-1
MAP Manager I Loop Around Test (#228) 10-1387
MAPD 10-1081
measurements
security 3-6
Media Processor 10-919, 10-1069, 10-1081
Memory Board Check Test (#631) 10-1387
memory cards
errors 5-22
failures 5-22

Memory Error Detection Test (#87) 10-1387
Memory Functional Test (#332) 10-1387
mismatch of signals 1-14
Modem Connection 8-43, 8-120, A-26
MTP Analog Loop Around Test (#103) 10-1387
MTP Aux Loop Around Test (#229) 10-1387
MTP Dual Port Ram Test (#104) 10-1387
MTP Outpulse Relay Test (#102) 10-1387
MTP Reset Test (#101) 10-1387
MTP Sanity Handshake Test (#106) 10-1387

N

NetMeeting 10-880
network
    jacks 1-24
network control circuit packs 5-3
network interface 5-63
No License Mode 10-1163
noise
    peak level 1-23
NO-LIC (NO License) 10-1163

O

on-site maintenance 9-2
Open System Interconnect model 1-9
    data-link layer 1-9
    physical layer 1-9
option jumpers
    TN464 10-1841
    universal DS1 (UDS1) interface circuit packs 10-1841
OSI, see Open System Interconnect model
OSS Numbers field 8-34, A-17

P

Packet Bus 10-1261
Packet bus 10-942
packet bus
    circuit pack failures 9-6
    circuit packs 9-1, 9-5
    connectivity 9-5
    fault correction procedures 9-10
    fault Isolation/correction 9-1
    fault isolation/correction tools 9-3
    maintenance 9-8
    maintenance objects (MOs) 9-5
    maintenance software 9-9
    TDM bus 9-8
Packet Interface 10-1290
Password Expiration screen 3-6
PBX standard RS-464A 1-18
pcANYWHERE 10-1043
PCM-encoded analog signal 1-12, 1-15
peak noise level 1-23
performance 1-9 to 1-23
    echo-return loss 1-22
    single-frequency return loss 1-22
physical
    layer, OSI 1-9
pinout
    H600-513 cable 10-1834
PKT-BUS 10-942, 10-1261
PKT-INT 10-1290
port network connectivity (PNC) 8-111
port-to-port insertion loss 1-20
power
    controls 2-2
    options available 2-2
    removing 5-5
    restoring 5-7
    service interruptions 2-3
    supplies 5-18
power distribution units
    LEDs 7-6
power supply sub assemblies 5-16
preventative maintenance
    procedures 5-24
PRI 1-11
PRI endpoint problems
    troubleshooting 5-44
private line service codes 1-23
Processor Non-maskable Interrupt Test (#82) 10-1387
Processor ROM Checksum Test (#80) 10-1387
Processor Sanity Timer Test (#83) 10-1387
Processor Software Initiated Interrupt Test (#77) 10-1387
PROCR 10-1385
Proshare 10-880
protocols
    8-bit character code 1-12
    ADU 1-12
    analog 1-12
    BRI 1-11
    CEPT1 1-12
    DCP 1-11
    Digital Multiplexed Interface 1-12
    for applications 1-16 to 1-23
    layers 1-11
    PRI 1-11
    summary of states 1-13
    system 1-9
    voice-grade data 1-12
PSTN fallback 10-1041

Q

quantization distortion loss 1-21

R

Read All Memory Test (#85) 10-1387
rear panel connector 1-24
reboots 4-1
Recorded Announcements screen, *see* Announcements/Audio Sources screen
recorded announcements, saving 5-20
reliability systems 6-1
remote maintenance 9-2
REN, see ringer equivalency numbers
reset system 1 4-2
reset system 2 4-3
reset system 3 4-3
reset system 4 4-4
reset system 5 4-5
reset translation-id 8-277
ringer equivalency numbers 1-24
RS-232
    interface 1-11
RS-449
    physical interface 1-11
RS-464A 1-18
rules, connectivity 1-14

S

safety precautions xxx
Save Announcements screen 5-22
Save Translation screen 5-21
screen forms 3-5
Second OSS Telephone Number 8-35, 8-114, A-19
security
    measurements 3-6
service
    codes 1-23
Service Marks xxxiv
SFRL, see single-frequency return loss 1-22
signals
    mismatch 1-14
    PCM-encoded analog 1-15
simplex mode tests 5-40
single-frequency return loss 1-22
software upgrades
    systems without high or critical reliability 5-23
specifications 1-9 to 1-23
SPE-down mode 4-8
SPE-interchange 4-7
SRP-EPN 10-1516
standard reliability systems 3-2
standards
    electromagnetic compatibility 3
standby SPE 4-7
station-to-CO trunk frequency response 1-19
station-to-digital interface frequency response 1-19
station-to-station frequency response 1-19
summary of protocol states 1-13
Survivable Remote Expansion Port Network (SREPN) 10-1516
switch
    transmission characteristics 1-18 to 1-23
switch processing elements (SPE) 8-111
Switch-Based Bulletin Board 3-22
synchronization 1-9
system
    insertion loss 1-20
    protocols 1-9
    quantization distortion loss 1-21
    specifications 1-9 to 1-23
system access tones
    Facility Test Calls 5-32
system features
    troubleshooting system resources 5-25
system reboots 4-4, 4-5
system resets
    reasons for 4-1
System Tone Test Call 5-32

T

T1 DS1 span 5-58
tape drive heads 5-25
TDM bus
    clocks 10-1007, 10-1163, 10-1721
    packet bus 9-8
TDM bus clock (TDM-CLK) 10-1721
technical specifications 1-9 to 1-23
terminal
    equipment port wiring 1-23
Terminal Alarm Notification
    alarms 7-2
    description 7-2
terminals
    2900/715 BCS 3-1
    715 BCS 3-1
    administration 3-1, 3-2
    DEC VT220 3-25
    keyboards 3-2
    management 3-1
    Manager G3MT 3-1
    Manager I 3-1
Terminating Trunk Transmission (TTT)
    tests 5-42
termination impedances 1-22

testing
background 1-8
demand 1-8
maintenance 1-8
system technician-demanded 10-924, 10-1072, 10-1083, 10-1854
tests
analog tie trunk back-to-back 5-35
E&M mode 5-36
logins 3-6
simplex mode 5-40
Terminating Trunk Transmission (TTT) 5-42
tests and audits
#11 Digital Line Electronic Power Feed Test 10-576, 10-1452
#1201 Digital Terminal Remote Loop Around Test 10-569
#1209 Board Loopback Test 10-662
#1209 DS1 Board Loopback Test 10-663, 10-1904
#1210 CSU Equipment Loopback Test 10-666, 10-667, 10-1907
#1211 CSU Repeater Loopback Test 10-671, 10-672, 10-1911
#1212 CPE Loopback Jack Test 10-675, 10-1915
#1213 Far CSU Loopback Test 10-680, 10-1920
#1214 One-Way Span Test 10-684, 10-1925
#1215 Inject Single Bit Error Test 10-687, 10-1929
#1216 End Loopback/Span Test 10-690, 10-1932
#122 Cabinet Temperature Query Test [Non-Variable Speed Fans] 10-332
#1227 ICSU Status LEDs Test 10-693, 10-1935
#126 Power Unit Recycle Test 10-372, 10-387
#127 Power Unit Query Test 10-374, 10-389
#13 Voice and Control Channel Local Loop Test 10-577, 10-728
#135 Internal Loop Around Test 10-627, 10-1860
#138 Loss of Signal Alarm Inquiry Test 10-630, 10-631, 10-1865, 10-1937
#139 Blue Alarm Inquiry Test 10-639, 10-1875
#139 Red Alarm Inquiry Test 10-643
#140 Red Alarm Inquiry Test 10-642, 10-1879
#140AY Loop Around Test 10-146
#141 Yellow Alarm Inquiry Test 10-646, 10-647, 10-1884
#142 Major Alarm Inquiry Test 10-650, 10-1889
#143 Minor Alarm Inquiry Test 10-652, 10-1892
#144 Slip Alarm Inquiry Test 10-655, 10-1685, 10-1895
#145 Misframe Alarm Inquiry Test 10-658, 10-659, 10-1899
#146 Translation Update Test 10-662, 10-927, 10-1066, 10-1076, 10-1903
#148 TDM Bus Clock Circuit Status Inquiry Test 10-1728
#149 TDM Bus Clock Slip Inquiry Test 10-1730
#150 TDM Bus Clock PPM Inquiry Test 10-1732
#151 TDM Bus Clock Parameter Update Test 10-1733
#16 DIG-LINE Station Lamp Updates Test 10-580, 10-731, 10-1453
tests and audits, (continued)
#161 Loop Around Test 10-82, 10-275, 10-1671
#17 Station (Digital) Audits Test 10-582, 10-1455
#205 Channel Administration Memory Array (CAMA) Test 10-158
#206 Playback Speech Memory Array (PSMA) Test 10-160
#208 Angel-Speech Processor (SP) Handshake Test 10-141
#209 Announcement Checksum Test 10-142
#211 Super Frame Match Inquiry Test 10-150
#212 Clock Match Inquiry Test 10-151
#222 140AY Channel Sanity Inquiry Test 10-165
#240 Expansion Interface Local Looparound 10-222
#242 Expansion Interface Lightwave Transceiver Loopa-round 10-1085, 10-1087
#252 Circuit Pack Restart Test 10-401, 10-402
#255 Signaling Link State Check Test 10-200
#256 Service State Audit Test 10-201
#257 Call State Audit Test 10-203
#258 ISDN Test Call 10-204
#270 Clear Error Counters 10-192, 10-291, 10-1670
#314 DS1 CO Dial Tone Seizure Test 10-594
#314 DS1CO Dial Tone Seizure Test 10-433
#35 Battery Feed Test 10-72, 10-94
#36 Port Audit and Update Test 10-431, 10-593
#36 Station Status and Translation Audits and Updates 10-55, 10-1438
#36 Station Status and Translation Audits and Updates Test 10-97
#36 Station Status and Translation Audits and Updates Test (#36) 10-75
#40 Tone Generator Transmission Test 10-1807
#42 Tone Detection Verification Test 10-414
#46 Clock Health Inquiry Test 10-1800
#47 Loop Around and Conference Test 10-100
#48 Station Present Test 10-57, 10-78, 10-106, 10-1440
#50 NPE Connection Audit Test 10-622, 10-1060, 10-1856
#52 Control Channel Loop Around Test 10-623, 10-924, 10-1061, 10-1073, 10-1857
#52 Control Channel Loop-Around Test 10-213, 10-401
#53 SAKI Sanity Test 10-625, 10-926, 10-928, 10-932, 10-1062, 10-1074, 10-1079, 10-1080, 10-1858
#574 Board Type Check Test 10-1734
#595 LANBIC Receive Parity Error Counter Test 10-265, 10-403, 10-1660
#596 Receive FIFO Overflow Error Counter Test 10-404
#597 Invalid LAPD Frame Error Counter Test 10-405
#598 Packet Interface Test 10-406
#599 Packet Gateway Switched Port Loop-Around Test 10-1356
#6 NPE Crosstalk Test 10-66, 10-89, 10-423, 10-589
#600 Congestion Query Test 10-408
#601Link Status Test 10-409, 10-1364

tests and audits, (continued)
#610 Packet Gateway Port Local Loop-Around Test 10-744, 10-745, 10-1358
#613 Level 1 State Inquiry Test 10-748, 10-750, 10-875, 10-879, 10-1362
#618 BRI Port Local LAN Loop Around 10-186, 10-277, 10-1673
#619 BRI Port Local TDM Loop Around 10-280, 10-1675
#620 Electronic Power Feed Restoral 10-282
#621 Level 1 Status Inquiry 10-188, 10-283, 10-1680
#622 Electronic Power Feed Inquiry 10-287
#624 Layer 1 Transmission Error Counter Test 10-190, 10-191, 10-289
#625 Receive FIFO Overflow Error Counter Test 10-290, 10-1677, 10-1678
#626 Signaling Link Status Test 10-180, 10-307
#627 BRI Remote Loop Back 10-310
#628 BRI XID 10-313
#629 BRI Layer 3 Query 10-316, 10-1683
#630 BRI Set Audits 10-319
#637 Remote Layer 3 Query 10-224, 10-876, 10-929, 10-1077
#651 Standby Reference Health Check Test 10-1735
#7 Conference Circuit Test 10-50, 10-69, 10-426, 10-591
#844-848 Transmission Test 10-460, 10-1777
#884 Memory Checksum Test 10-918, 10-1303
#885 Private Loop Around Tests 10-1307
#886 Maintenance Loop Around Test 10-1311
#887 Read and Clear Board Counters 10-1313
#888 Active-Standby Peer Link Test 10-1317
#9 Digital Line NPE Crosstalk Test 10-573, 10-725
#976 Session Status Query Test 10-877, 10-883, 10-884, 10-929, 10-1077, 10-1360
#985 System Link Status 10-1602
Text Checksum Test (#86) 10-1387
Time Slot Test Call 5-30
TN2036 circuit packs 5-50
TN2182 circuit packs
international settings 10-1787
time division multiplex (TDM) bus clocks 10-1721
tone-clock 10-1007, 10-1163
TN2242 10-1831
TN2401 10-44, 10-111, 10-341, 10-480, 10-485, 10-503, 10-916, 10-1261, 10-1290, 10-1571
TN2501AP (integrated announcements)
faceplate LEDs, interpretation 10-1960
TN2793B 10-111
TN464 circuit packs
DS1 interface 10-611, 10-919, 10-1037, 10-1069, 10-1831
option jumpers 10-1841
trunks 10-1839
TN464C 10-611
TN722 circuit packs 10-611
TN767 circuit packs 10-611
TN768 circuit packs
description 10-1007, 10-1163
international settings 10-1787
time division multiplex (TDM) bus clocks 10-1721
TN780 circuit packs
international settings 10-1787
time division multiplex (TDM) bus clocks 10-1721
TN786B 10-1385
TN790 4-4, 6-22, 6-27
TN793B 10-111
TN794 10-44, 10-111, 10-341, 10-480, 10-485, 10-503, 10-916, 10-1261, 10-1290, 10-1571
TN797 10-111, 10-1819
TN799 10-393
TN799 (C-LAN)
in Voice Announcements over LAN (VAL) application 10-1958
TN799B 8-496, A-151
TN802B 8-496, 10-919, 10-1069, 10-1081, A-151
tone generators 10-1007, 10-1163
tone-clock circuit packs
international settings 10-1787
time division multiplex (TDM) bus clocks 10-1721
TN2182 10-1007, 10-1163
tones
Italian 10-1787
Touch-Tone (DTMF) Receiver Test Call 5-29
traceroute A-151
Trademarks xxxiv
transaction keys 3-2
Transfer on Ringing 1-16
TRANS-ID
Changing the grace period interval 10-1817
Processor circuit pack replacement 10-1815
TRANS-ID (Translation-ID) 10-1814
transmission
characteristics 1-18 to 1-23
errors 1-9
stream 1-9
TR-LN-BD 10-1819
trouble-clearing 10-1
troubleshooting
backplane voltage problems 5-50
control carrier power units 5-10
ISDN-PRI problems 5-42
ISDN-PRI test call problems 5-46
PRI endpoint problems 5-44
VAL 10-1962
Trunk Group Busy/Warning Indicators to Attendant 5-27
Trunk Group form 5-37
Trunk Identification by Attendant 5-27
trunk speed 1-15
Trunk Test Call 5-28
trunking facilities 1-14
trunks, DS1 10-919, 10-1037, 10-1069, 10-1831
TTC privante networking (Japan) 10-1831
TTT, see Terminating Trunk Transmission (TTT)

U

UDS1 Interface Circuit Pack 10-1831
universal DS1 (UDS1) interface circuit packs 10-611, 10-919, 10-1037, 10-1069, 10-1831, 10-1841

V

V.35 1-11
Voice Announcements over LAN (VAL)
    backplane adapter—Comcode 10-1958
    backplane adapter—installing 10-1961
    equipment configuration 10-1957
    maintenance objects 10-1940
    troubleshooting commands 10-1962
voice-grade
    data 1-12
voltages 5-50

W

warm starts 4-2
wiring
    premises 1-23
    terminal equipment ports 1-23