DEFINITY®
Enterprise Communications Server

CallVisor® ASAI Applications Over MAPD

555-230-136
Issue 3
May 2002

Notice

Every effort was made to ensure that the information in this book was complete and accurate at the time of printing. However, information is subject to change.

Preventing Toll Fraud

"Toll fraud" is the unauthorized use of your telecommunications system by an unauthorized party (for example, a person who is not a corporate employee, agent, subcontractor, or working on your company's behalf). Be aware that there may be a risk of toll fraud associated with your system and that, if toll fraud occurs, it can result in substantial additional charges for your telecommunications services.

Avaya Fraud Intervention

If you suspect you are being victimized by toll fraud and you need technical support or assistance, call the appropriate Avaya National Customer Care Center telephone number. Users of the MERLIN®, PARTNER®, and System 25 products should call 1 800 628-2888. Users of the System 75, System 85, DEFINITY® Generic 1, 2 and 3, and MutiVantage products should call 1 800 643-2353.

Providing Telecommunications Security

Telecommunications security (of voice, data, and/or video communications) is the prevention of any type of intrusion to (that is, either unauthorized or malicious access to or use of your company's telecommunications equipment) by some party.
Your company's "telecommunications equipment" includes both this Avaya product and any other voice/data/video equipment that could be accessed via this Avaya product (that is, "networked equipment").

An "outside party" is anyone who is not a corporate employee, agent, subcontractor, or working on your company's behalf. Whereas, a "malicious party" is anyone (including someone who may be otherwise authorized) who accesses your telecommunications equipment with either malicious or mischievous intent.

Such intrusions may be either to/through synchronous (time-multiplexed and/or circuit-based) or asynchronous (character-, message-, or packet-based) equipment or interfaces for reasons of:

- Utilization (of capabilities special to the accessed equipment)
- Theft (such as, of intellectual property, financial assets, or toll-facility access)
- Eavesdropping (privacy invasions to humans)
- Mischief (troubling, but apparently innocuous, tampering)
- Harm (such as harmful tampering, data loss or alteration, regardless of motive or intent)

Be aware that there may be a risk of unauthorized intrusions associated with your system and/or its networked equipment. Also realize that, if such an intrusion should occur, it could result in a variety of losses to your company (including, but not limited to, human/data privacy, intellectual property, material assets, financial resources, labor costs, and/or legal costs).

Your Responsibility for Your Company's Telecommunications Security

The final responsibility for securing both this system and its networked equipment rests with you – an Avaya customer's system administrator, your telecommunications peers, and your managers. Base the fulfillment of your responsibility on acquired knowledge and resources from a variety of sources including but not limited to:

- Installation documents
- System administration documents
- Security documents
- Hardware-/software-based security tools
- Shared information between you and your peers
- Telecommunications security experts

To prevent intrusions to your telecommunications equipment, you and your peers should carefully program and configure your:

- Avaya provided telecommunications systems and their interfaces
- Avaya provided software applications, as well as their underlying hardware/software platforms and interfaces
- Any other equipment networked to your Avaya products

Avaya does not warrant that this product or any of its networked equipment is either immune from or will prevent either unauthorized or malicious intrusions. Avaya will not be responsible for any charges, losses, or damages that result from such intrusions.

Trademarks

Adobe, Adobe Acrobat, and the Adobe logo are registered trademarks of Adobe Systems, Inc.
CallVisor, CentreVu, DEFINITY, and the Avaya logotype are registered trademarks of Avaya, Inc.
Avaya, MultiVantage, DEFINITY One, and DEFINTY ProLogix are trademarks of Avaya, Inc.
Dialogic CT-Connect is a trademark of Dialogic Corporation.
AIX and is a trademark of the International Business Machine Corporation.
IBM is a registered trademark of the International Business Machines Corporation.

How to get Help

If you need additional help, the following services are available. You may need to purchase an extended service agreement to use some of these services. Contact your Avaya representative for more information.

- DEFINITY Helpline +1 800 225 7585
  (for help with feature administration and system applications)
- Avaya National Customer Care Center +1 800 344-9670 (for help with ASAI)
- Avaya Toll Fraud Intervention +1 800 643 2353
- Avaya Corporate Security +1 800 822 9009

How to Order More Copies

Call:	US Voice:	1 800 457 1235
	US Fax:	1 800 457 1764
	non-US Voice:	+1 410 568 3680
	non-US Fax:	+1 410 891 0207

Write: Globalware Solutions
200 Ward Hill Avenue
Haverhill, MA 01835 USA
Attention: Avaya Account Manager

Contents

Preface — About this Document xiii

- Introduction xiii
- Purpose of this Document xiii
- Reason for Reissue xiii
- Intended Audience xiii
  - System Installers xiv
  - System Administrators xiv
- Structure of this Document xiv
- Related Documents xv
- Avaya Products and Service Web Sites xv

1 Overview of the MAPD 1-1

- Introduction 1-1
- In this chapter 1-1
- Overview of the MAPD 1-2
  - MAPD Price Element Codes (PECS) 1-2
    - A tip to explain software “configurations” 1-2
    - For more information about Price Element Codes 1-2
- The MAPD as a PC 1-3
- Computer Telephony Software on the MAPD 1-5
  - CVLAN System Software — Basic Components 1-5
  - CVLAN System Software — What it Does 1-5
  - DLG Software 1-6
- Message Rates and DEFINITY Limits 1-7
- Service Boundaries — No Customer LAN Troubleshooting 1-7
- MAPD Administration 1-7
- Upgrading Your Existing System 1-8
- Security Considerations 1-8

2 Installing the MAPD 2-1

- Overview 2-1
- In this Chapter 2-2

Contents

- Planning: Task 1 — Planning the Installation 2-3
  - Inspecting the Site 2-3
    - General Site Requirements 2-3
    - DEFINITY Software Requirements 2-3
    - DEFINITY Hardware Requirements — Available Slots in Switch Carrier 2-4
  - Identifying the Configuration 2-6
    - Components in a Typical Configuration 2-7
    - LAN Connection (RJ45) 2-7
    - 10Base-T Hub Based LANs 2-7
    - Administration/Port B 2-8
    - Maintenance/Port A — Avaya Remote Access 2-8
- Planning: Task 2 — Determining the Location for the MAPD in the Switch 2-9
  - Arranging Circuit Packs 2-9
  - Slot and Carrier Restrictions 2-9
  - Locating and Identifying MAPD System Slots 2-9
  - How MAPD Slots are Numbered 2-9
- Planning: Task 3 — Familiarizing Yourself with the MAPD System Assembly 2-11
- Installation: Task 1 — Gathering the Required Tools 2-13
- Installation: Task 2 — Reviewing the Safety Guidelines 2-13
- Installation: Task 3 — Installing the MAPD Assembly in the Switch 2-14
  - Precautions 2-14
  - Installing the MAPD in an AC Powered Switch 2-15
  - Installing the MAPD in a DC Powered Switch 2-18
- Planning: Task 4 — Connecting to the LAN 2-22
  - Setting Up the LAN Connection and Establishing the Service Boundary 2-23
  - Customer Responsibilities 2-23
  - Avaya Responsibilities 2-23
- Planning: Task 5 — Evaluating the Terminal Requirements (Optional) 2-25
  - Temporary vs. Permanent Terminal Installations 2-25
  - Direct Connections vs. Modem Connections 2-25
  - The MAPD Admin Port is Configured as Data Terminal Equipment (DTE) 2-26
  - Installing a Terminal via a Direct Connection 2-26

Contents

- Installation: Task 4a — Installing a Terminal Using a Direct Connection to a DC Switch 2-27
  - Installation Procedure for a Terminal Using a Direct Connection to a DC Switch 2-28
- Installation: Task 4b — Installing a Terminal Using a Direct Connection to a DC Switch 2-30
  - Installation Procedure for a Terminal Using a Direct Connection to a DC Switch 2-31
- Installation: Task 4c — Install a Terminal Using Modem Connections 2-32
  - Installation Procedure for a Terminal Using Modem Connections 2-33
- Installation: Task 5 — Connect the Maintenance Modem 2-35
- Installation: Task 6 — Finalize and Test the Hardware 2-37

3 Setting up the MAPD Configuration 3-1

- Introduction 3-1
  - Who Should Use this Chapter 3-1
  - Related Documents 3-1
- In this Chapter 3-2
- Task 1: DEFINITY Administration 3-3
  - Procedure to Configure MAPD in the Switch and Establish a Link 3-3
- MAPD Administration 3-6
- Task 1: Basic Administration — Logging in to the MAPD System 3-6
  - Procedure to Log in 3-7
- MAPD Task 1: Setting the MAPD Clock 3-9
  - Procedure to Set the MAPD Clock 3-9
- MAPD Task 2: Assigning the MAPD Machine ID (Optional) 3-11
  - Procedure for Assigning the MAPD Machine ID 3-11
- MAPD Task 3: Rebooting the MAPD 3-12
  - Procedure for Rebooting the MAPD 3-12
- MAPD Task 4: Testing MAPD/LAN Connectivity (Optional) 3-13

Contents

- Task 5: Pinging the MAPD — Customer 3-13
  - Procedure to Ping the MAPD — Customer 3-13
- Task 5A, Alternative Procedures 3-13
  - Task 5A1, Alternative Procedure to Ping the MAPD Itself — If Customer Is Unavailable 3-14
    - Guidelines for Evaluating an Internal MAPD Ping 3-15
  - Task 5A2, Alternative Procedure — Pinging the Customer's Network Server — If Customer is Unavailable 3-16
    - Guidelines for Evaluating a Client Network Ping 3-18
- MAPD Task 5: Registering the System 3-19
- Task 6: Deactivating and Activating Logins 3-19
  - Procedure for Deactivating and Activating Logins 3-19
- Task 7: Performing a Backup of the Removable Medium 3-20

4 CVLAN and DLG System Administration 4-1

- Getting Started 4-1
- Screen/System Conventions 4-1
- Logging On 4-2
- Moving Around the System 4-3
  - Using the Function Keys 4-4
- List of Screens (DLG and CV/LAN) 4-5
- List of Screens (DLG) 4-7
- Field Names and Descriptions 4-8
  - Main Menu (DLG) 4-8
  - Main Menu (DLG and CV/LAN) 4-9
  - Login/Password Administration 4-11
    - Add Logins 4-13
    - Change Passwords 4-15
  - TCP/IP Administration 4-17
    - This Host 4-18
    - Local Host Table 4-20
    - Local Host Table — Add Host 4-22
    - Network Routing Information 4-24

Contents

Network Routing Information — Network Routing Daemon 4-25
Network Routing Information — Default Gateway 4-26
Network Routing Information — Network Routing Table 4-28
Network Routing Table — Add Routes 4-30
Port Administration 4-32
Application Port Assignment 4-33
DLG Administration 4-34
Add Client Link 4-36
CV/LAN Administration 4-38
CV/LAN Administration — Clients for Node ID signalXX 4-40
Clients for Node ID signalXX — Add Client 4-42
CV/LAN Administration — Assign Port for Node ID signalXX 4-43
Maintenance (DLG) **4-44**
Maintenance (DLG and CV/LAN) 4-45
Removable Media Operations 4-47
Set System Time and Date 4-49
Reset System (DLG) 4-52
Reset System (DLG and CV/LAN) 4-53
System Logs 4-55
Security Logs 4-56
Security Logs — Login Attempt Log 4-57
Security Logs — Client Access Log 4-58
Security Logs — System Reset Log 4-59
Security Logs — Command Log 4-60
Diagnostics 4-61
Diagnostics — Ping Host 4-62
Diagnostics — Hardware Alarms 4-63
Diagnostics — Hardware Status 4-64
Application Components 4-65
CV/LAN Utilities 4-66
CV/LAN Utilities — ASAI Test 4-67
CV/LAN Utilities — ASAI Trace 4-68
CV/LAN Utilities — ISDN Trace 4-69
CV/LAN Utilities — ISDN Alarm 4-70
DLG Port Status/Control 4-71

Contents

DLG Port Status/Control — Message Collection Period 4-75
CV/LAN Port Status/Control 4-77
CV/LAN Port Status/Control — Message Collection Period 4-80

5 CVLAN System Administration 5-1

- List of Screens (CV/LAN) 5-1
- Field Names and Descriptions 5-3
  - Main Menu (CV/LAN) 5-3
  - Login/Password Administration 5-4
    - Add Logins 5-6
    - Change Passwords 5-8
  - TCP/IP Administration 5-10
    - This Host 5-11
    - Local Host Table 5-13
    - Local Host Table — Add Host 5-15
    - Network Routing Information 5-17
    - Network Routing Information — Network Routing Daemon 5-18
    - Network Routing Information — Default Gateway 5-19
    - Network Routing Information — Network Routing Table 5-21
    - Network Routing Table — Add Routes 5-23
    - CV/LAN Administration 5-25
    - CV/LAN Administration — Clients for Node ID signalXX 5-27
    - Clients for Node ID signalXX — Add Client 5-29
    - CV/LAN Administration — Assign Port for Node ID signalXX 5-30
  - Maintenance 5-31
    - Removable Media Operations 5-32
    - Set System Time and Date 5-33
    - Reset System (CV/LAN) 5-36
    - System Logs 5-38
    - Security Logs 5-39
    - Security Logs — Login Attempt Log 5-40
    - Security Logs — Client Access Log 5-41

Contents

Security Logs — System Reset Log 5-42
Security Logs — Command Log 5-43
Diagnostics 5-44
Diagnostics — Ping Host 5-45
Diagnostics — Hardware Alarms 5-46
Diagnostics — Hardware Status 5-47
Application Components 5-48
CV/LAN Utilities 5-49
CV/LAN Utilities — ASAI Test 5-50
CV/LAN Utilities — ASAI Trace 5-51
CV/LAN Utilities — ISDN Trace 5-52
CV/LAN Utilities — ISDN Alarm 5-53
CV/LAN Port Status/Control 5-54
CV/LAN Port Status/Control — Message Collection Period (CV/LAN) 5-57

6 DLG System Administration 6-1

- List of Screens (DLG) 6-1
- Field Names and Descriptions 6-3

Main Menu (DLG) 6-3
Login/Password Administration 6-4
Add Logins 6-6
Change Passwords 6-8
TCP/IP Administration 6-10
This Host 6-11
Local Host Table 6-13
Local Host Table — Add Host 6-15
Network Routing Information 6-17
Network Routing Information — Network Routing Daemon 6-18
Network Routing Information — Default Gateway 6-19
Network Routing Information — Network Routing Table 6-21
Network Routing Table — Add Routes 6-23
DLG Administration 6-25
Add Client Link 6-27
Maintenance (DLG) 6-29

Contents

Removable Media Operations 6-30
Set System Time and Date 6-32
Reset System (DLG) 6-35
System Logs 6-36
Security Logs 6-37
Security Logs — Login Attempt Log 6-38
Security Logs — Client Access Log 6-39
Security Logs — System Reset Log 6-40
Security Logs — Command Log 6-41
Diagnostics 6-42
Diagnostics — Ping Host 6-43
Diagnostics — Hardware Alarms 6-44
Diagnostics — Hardware Status 6-45
Application Components 6-46
DLG Port Status/Control 6-47
DLG Port Status/Control — Message Collection Period 6-51

A PBX Carrier Configuration Worksheets A-1

- Worksheet A-1: Port Slot Assignments (Before Carrier Arrangement) A-2
- Worksheet A-2: Port Assignments (for Carrier Rearrangement) A-3
- Worksheet A-3: Port Slot Locations for the MAPD System Assembly A-4

B Terminal and Modem Option Settings B-1

- Worksheet B-1: Terminals/Modems B-2
- Terminal Option Settings B-3
- Modem Option Settings B-4
  - Setting up the US Robotics Sportster External 33.6 Fax Modem for the Local Console Port (Admin/Port B) B-4
  - Setting up the US Robotics Sportster External 33.6 Fax Modem for the Maintenance Port (Maint/Port A) B-4

Contents

Setting up a Generic Modem for use with the Local Console Port (Admin/Port B) B-5

C Ordering Information C-1

- Complete System C-1
- Primary Equipment C-2

D Troubleshooting Procedure D-1

- Bringing up the MAPD System D-2
- Solving Terminal Connection Problems D-2
- Solving Connectivity Problems D-3

E Sample Customer Configurations E-1

- Example 1. Secure LAN with Defaults E-2
- Example 2. Multiple Secure LANs E-3

F Returning the MAPD System to its Original State F-1

G Project Manager Worksheet G-1

- Worksheet G-1 Gather Networking Information G-2

Contents

H **Upgrading the MAPD System** **H-1**

I **Network Latency Requirements on LAN/WAN Connections from a CTI Server to the MAPD I-1**

J **MAPD Price Element Code Descriptions** **J-1**

- PEC Descriptions J-1
  - Existing PECs J-1
  - New PECs J-1
  - PECs and Corresponding SAP Codes J-5
  - CVLAN Feature Matrix J-5

GL **Glossary** **GL-1**

IN **Index** **IN-1**

Preface — About this Document

Introduction

This document represents an information hybrid. In a sense, it is two documents in one — a hardware installation document and a software administration document. The architecture of the document reflects the nature of the product. The product is a hardware platform (essentially a computer) that can run separate and independent software applications.

Purpose of this Document

The purpose of this document is to enable you to install the Multi-Application Platform for DEFINITY (MAPD) and to carry out administrative tasks associated with the two applications that can run on the MAPD — CallVisor ASAI PC LAN and CallVisor ASAI DEFINITY LAN Gateway.

Reason for Reissue

There are no new technical changes with this release.

Intended Audience

This document is directed toward two audiences — hardware installers and system administrators. The next two sections describe the skill and knowledge levels that this document assumes for each audience.

System Installers

This document (especially Chapters 1, 2, and 3) assumes that system installers are familiar with the following:

- installing circuit packs in both the DEFINITY ECS and DEFINITY PROLOGIX carriers
- physically setting up LAN connections (including Data Communications Equipment and Data Terminal Equipment, modems, null modems, etc)
- installing a maintenance modem and terminal
- basic DEFINITY administration (determining software version, assigning ports and so on)

System Administrators

This document assumes that system administrators are familiar with the following tasks:

- basic knowledge of the UNIX operating system
- setting up LAN connectivity (administering TCP/IP connections)
- basic DEFINITY administration

Structure of this Document

The information in this document is grouped into the following chapters:

- Chapter 1, ‘‘Overview of the MAPD’’ provides a component level description of the MAPD.
- Chapter 2, ‘‘Installing the MAPD’’ explains how to install the MAPD in a DEFINITY ECS or a DEFINITY PROLOGIX carrier.
- Chapter 3, ‘‘Setting up the MAPD Configuration’’ describes the platform-related administrative tasks involved in setting up the DEFINITY system as well as the MAPD.
- Chapter 4, ‘‘CVLAN and DLG System Administration’’ provides a reference to the administrative screens for both the DLG application and the PC LAN application (for MAPD boards that are running both software applications).
- Chapter 5, ‘‘CVLAN System Administration’’ provides a reference to the administrative screens for the PC LAN application only (for MAPD boards that are running the PC LAN application only)
- Chapter 6, ‘‘DLG System Administration’’ provides a reference to the administrative screens for the DLG application (for MAPD boards that are running the DLG application only).

Related Documents

This section lists both switch related documents (such as DEFINITY ECS and DEFINITY ONE) and adjunct documents (such as the CentreVu Computer Telephony Documents).

- *DEFINITY Systems Release 10 Library CD*, 555-233-822. This CD includes a comprehensive set of DEFINITY documents. This is the primary resource for information about the DEFINITY system.
- *CentreVu Computer Telephony, Telephony Services and CallVisor PC Installation*. This document describes administering the MAPD in the context of CentreVu Computer Telephony (CVCT). The CentreVu Computer Telephony CD ROM includes this document.

Avaya Products and Service Web Sites

Use the following URLs for more information.

- For information about Avaya products and service, go to http://www.avaya.com
- For product documentation for all Avaya products and related documentation, go to http://www.avaya.com/support

Overview of the MAPD

1

Introduction

This describes the Multi-Application Platform for DEFINITY (MAPD) and the two Computer Telephony (CT) software applications that reside on it.

In this chapter

This chapter contains the following topics:

Topic	See Page
Overview of the MAPD	page 1-2
The MAPD as a PC	page 1-3
Computer Telephony Software Applications on the MAPD	page 1-5

Overview of the MAPD

The Multi-Application Platform for DEFINITY (MAPD) is a system assembly. Think of it as a computer that resides in the DEFINITY switch.

MAPD Price Element Codes (PECS)

This section describes the MAPD equipment identifiers, also referred to as Price Element Codes or “PECs.” Because PECs refer to the MAPD hardware system assembly and each of the software components, they provide a convenient way of sorting out the hardware from the software. See Table 1-1.

Table 1-1. Price Element Codes

If the PEC is...	Then it refers to...
1273 MPD	Hardware assembly. This is more than just the MAPD circuit pack, it includes all of the “PC-like” components, including the MAPD circuit pack. ■ The Part Number of the MAPD circuit pack is TN801B.
1273 CVL	Software. This is the CallVisor PC LAN (CVLAN) server software, which resides on the PCMCIA FlashDisk (on the MAPD), if the customer orders CVLAN.
1273 LAN	Software. This is the DEFINITY LAN Gateway (DLG) software, which resides on the PCMCIA FlashDisk (on the MAPD), if the customer orders DLG.

A tip to explain software “configurations”

In this sense, configuration refers to the software application or applications that are pre installed on the MAPD. Here are the three possible configurations.

- CVLAN server software (1273 CVL) only
- DLG software (1273 LAN) only
- Both the CVLAN (1273 CVL) server software and the DLG (1273 LAN) software.

For more information about Price Element Codes

This document is being reissued to reflect three new PEC codes. For a complete listing of Price Element Codes along with part numbers and manufacturing codes (also called comcodes) see Appendix C.

The MAPD as a PC

Because the MAPD system assembly is essentially a PC that resides in the switch, it consists of the components you would expect to find in a PC, such as:

- Pentium Processor card (233 MHZ)

  The Pentium processor is configured with 32 MB of (socketed) Dynamic Random Access Memory (DRAM).
- Peripheral Component Interconnect (PCI) and Industry Standard Architecture (ISA) bus interfaces.
- Integrated Drive Electronics (IDE) disk drive. Software applications run on the IDE drive.
- Personal Computer Memory Card International Association interface (PCMCIA) SanDisk 10 MB hard drive (for use with PCMCIA FlashDisk)
- A local serial port (Admin/Port B)
- An additional serial port (Maint/Port A) for modem connection
- Synchronous packet adjunct serial port (DCIU, reserved for future use).
- Liquid Crystal Display (LCD) panel for diagnostics.

The MAPD system assembly (1273 MPD) includes cabling assemblies and a modem.

See Figure 1-2 for an illustration of the MAPD.

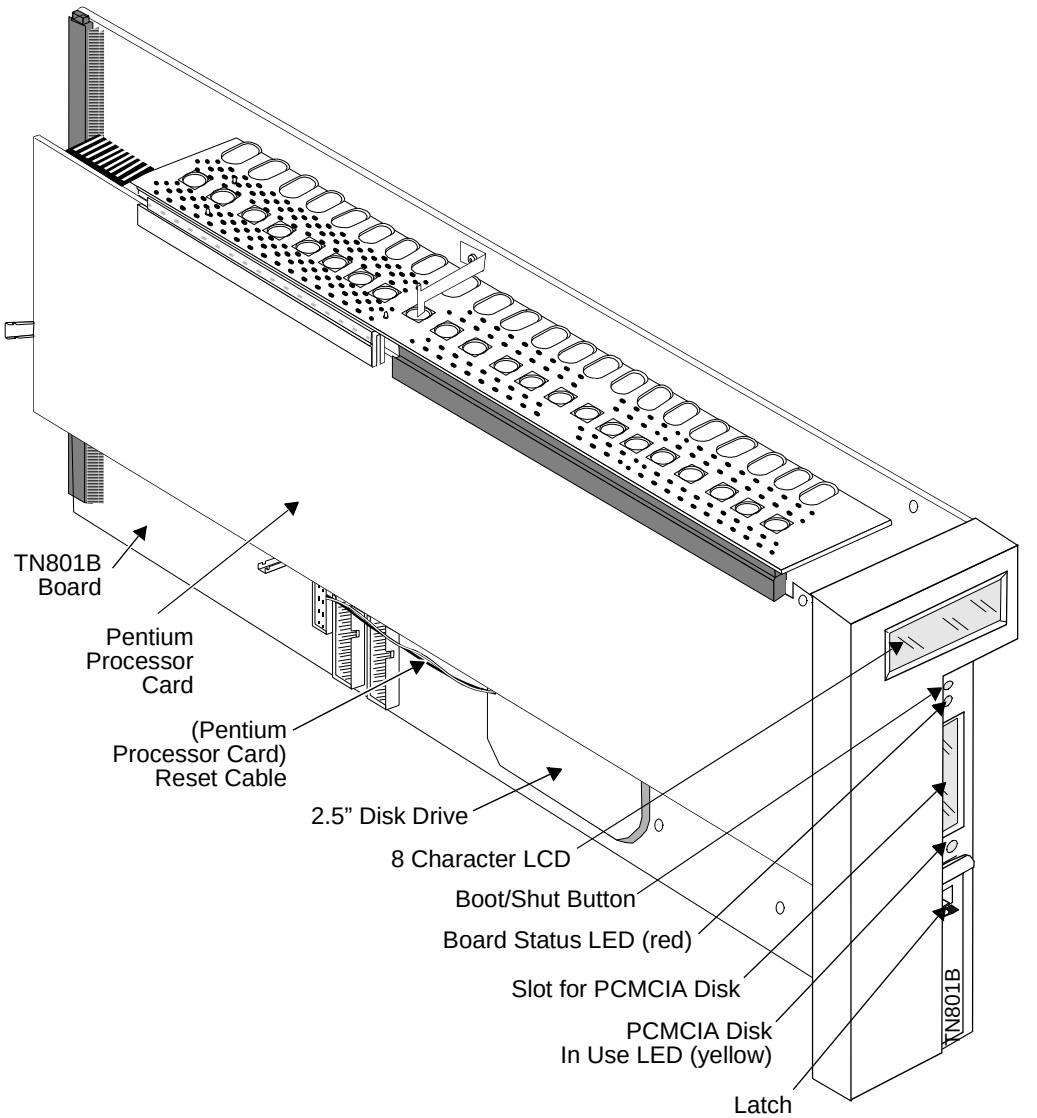

Figure 1-1. MAPD System Assembly

Computer Telephony Software on the MAPD

This section describes the following two computer telephony software applications that run on the MAPD:

- CallVisor ASAI PC LAN (also referred to as CVLAN).
- CallVisor DEFINITY LAN Gateway (DLG)

CVLAN System Software — Basic Components

The CVLAN application consists of two separate components:

- **Server**

  The CVLAN server requires no installation — it is pre installed (by the factory) on the IDE drive. Because the CV/LAN application is integrated on the MAPD, it eliminates the need for an adjunct PC.

- **Client**

  The CVLAN client software, which resides on a client workstation or server, requires installation on the appropriate workstation or client PC.

NOTE:
The MAPD board is not shipped with the client software. The latest version of the CVLAN Client software is available at http://support.avaya.com/ccenter/cti/cvlan/sd/

CVLAN System Software — What it Does

CVLAN (server and client) software provides a complete set of CTI development capabilities. As a multifaceted product it provides:

- a C-language based Application Programming Interface (API) that enables you to design and implement Computer Telephony Integration (CTI) applications for a DEFINITY switch.
- an administrative interface, setting up, maintaining, and troubleshooting ASAI links
- multi threaded processing, which is capable of handling up to 60 simultaneous TCP socket connections, and a maximum of 8 ASAI links.

Although CV/LAN over the MAPD is provided with a default set of administered parameters, it is highly likely that many customers will administer the MAPD parameters and client information to conform to their networks.

DLG Software

The software that provides the DEFINITY LAN Gateway application on the system assembly comes preloaded on the system when it is shipped from the factory.

The function of the software is to act as a mapper (or Brouter) for ASAI messages. It links an ISDN network (the DEFINITY system call control) to a TCP/IP network (computer client) by moving ASAI messages back and forth from Q.921 synchronous data frames to TCP/IP Ethernet packets. It also associates computer clients (by their TCP/IP network addresses) to physical ports on the DEFINITY systems that are administered as ASAI extensions.

This mapping provides a virtual point-to-point connection between a particular computer client and an associated port on the DEFINITY system. This arrangement continues to support ASAI ability to sense when a a particular computer client connection is lost and to send an alarm. It also provides a more secure environment by fixing the addresses of the clients that may receive this service.

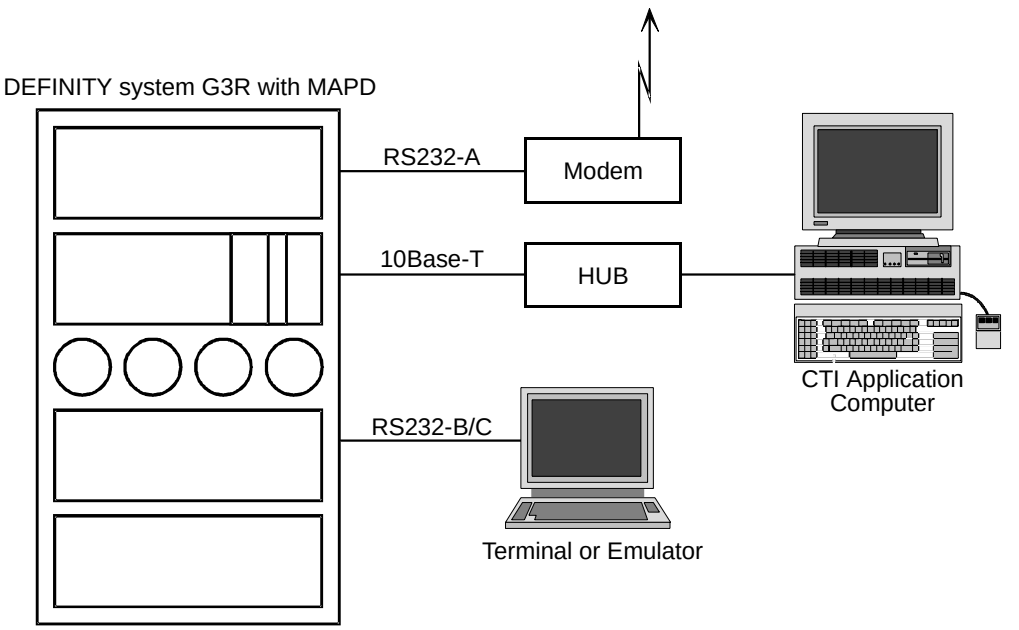

Figure 1-2. MAPD System in the DEFINITY System

Message Rates and DEFINITY Limits

On the MAPD system, in DEFINITY ECS, 240 messages per second can be processed in full duplex mode. This is equivalent to the bandwidth of 8 BRI ASAI links.

On the MAPD System in DEFINITY **ProLogix** up to 120 messages per second can be processed in full duplex mode. This is equivalent to the bandwidth of 4 BRI ASAI links. These are the MAPD TN801B board limits and these messages will be distributed among all the links on the board in any fashion.

There is also a DEFINITY system limit. Refer to the DEFINITY system document, System Description, 555-230-211. The DEFINITY system limitation must be considered regardless of the number of MAPD, MFB, or BRI ASAI links.

Service Boundaries — No Customer LAN Troubleshooting

Avaya support services for the MAPD system will not troubleshoot a customer LAN. If the customer LAN is experiencing difficulties, customers should follow the escalation path supplied by their LAN provider.

MAPD Administration

Depending on the system setup desired, customers can configure and administer the MAPD system in several ways:

- Using telnet over TCP/IP
- Using a dumb terminal dedicated to the MAPD circuit pack
- Using the RS-232 port of a PC or host attached to the MAPD circuit pack.

A menu-driven interface offers ease of administration, and help screens are available if assistance is needed. In addition, security features explained in the section, “Security Considerations,’’ in this chapter will help in guarding against unauthorized access.

Upgrading Your Existing System

If you want to upgrade your DEFINITY system with the MAPD system to a non-supported DEFINITY system, you must first upgrade it with a field maintenance release of R6.1 or later software.

NOTE:
For MAPD support on ProLogix, you must upgrade to field release 6.3.2 or later.

This software can be configured in either V5 or V6 mode on the Customer Options Systems Parameters Administration Form. If you upgrade from a G3V4 DEFINITY system or earlier releases, this will be a hardware as well as a software upgrade. Contact the Technical Service Center at 1 800 248-1234 for more information. (You will be prompted for your Social Security Number and 4-digit PIN.)

Security Considerations

Toll fraud is an unauthorized use of a company's telecommunications system by an unauthorized third party. The MAPD system offers the following security features to help prevent toll fraud and protect against unauthorized users gaining access to the system and learning the contents of the calls:

- Password protection — The system requires administrators to provide a password before access is granted. Also, when the system is installed, default passwords are changed to help guard against unauthorized access.
- Audit trail — The MAPD system provides selective logging of an audit trail of operations carried across the interface. Users can view a set of Security Logs to learn such information as failed login attempts, unauthorized client access attempts, time of the MAPD system resets, and commands executed from Administration/Maintenance screens.

This system does not support an encrypted/secured protocol.Therefore:

- It is possible for a criminal hacker to "spoof" the system by reverse engineering the protocol and then "impersonating" a valid client.
- Telnet transmissions of logins, passwords, and administrative information cannot be guaranteed to be secure.

This is more likely to happen if the hacker has physical access to the Ethernet LAN or to a system attached to the Ethernet LAN that supports the MAPD system. The customers are encouraged to help protect the system and reduce the possibility of toll fraud by attaching the system assembly and its clients to an isolated, physically secure Ethernet (not connected to any other Ethernet).

Installing the MAPD

2

This chapter is primarily for Avaya services personnel. Typically, Avaya installs the MAPD system.

Overview

Installing the Multi-Application Platform for DEFINITY (MAPD) consists of two basic phases — planning the installation and carrying out the installation tasks. This chapter describes the tasks and activities for both phases.

In this Chapter

This chapter divides topics into two basic categories, planning-oriented tasks, and installation-oriented tasks.

NOTE:
Use this topic table as a checklist for carrying out the tasks described in Chapter 2.

Topic
"Planning: Task 1 — Planning the Installation"
"Planning: Task 2 — Determining the Location for the MAPD in the Switch"
"Planning: Task 3 — Familiarizing Yourself with the MAPD System Assembly"
"Installation: Task 1 — Gathering the Required Tools"
"Installation: Task 2 — Reviewing the Safety Guidelines"
"Installation: Task 3 — Installing the MAPD Assembly in the Switch"
"Planning: Task 4 — Connecting to the LAN"
"Planning: Task 5 — Evaluating the Terminal Requirements (Optional)"
"Installation: Task 4a — Installing a Terminal Using a Direct Connection to a DC Switch"
"Installation: Task 4b — Installing a Terminal Using a Direct Connection to a DC Switch"
"Installation: Task 4c — Install a Terminal Using Modem Connections"
"Installation: Task 5 — Connect the Maintenance Modem"
"Installation: Task 6 — Finalize and Test the Hardware"

Planning: Task 1 — Planning the Installation

Planning the installation involves the following basic activities:

- Reading this entire chapter — before you attempt to install the hardware, read all of Chapter 2.
- Inspecting the site
- Gathering the required tools
- Reviewing the safety guidelines
- Checking components and connectivity

Inspecting the Site

Inspecting the site involves verifying that the DEFINITY switch can accommodate the MAPD in terms of software and hardware. Make sure the switch meets the following requirements.

General Site Requirements

- A LAN connection available to the system prior to hookup. This connection to the LAN is provided by the customer for Avaya at an agreed-upon demarcation point.
- Easy access for cabling.
- Good work space for the system administrator and/or operators.
- Temperature range of 50 to 100 F (10 to 38 C), with the ideal range between 50 and 80 F.
- Humidity range of 20 percent to 80 percent noncondensing. In addition, make sure that the site is secure and provides protection from excessive sunlight, heat, cold, chemicals, static electricity, magnetic fields, vibration, and grime.

DEFINITY Software Requirements

- For DEFINITY system, an R5 system, or higher (requires R6.1 or later system software in V5 or V6 mode)
- For ProLogix, system software Release 6.3.2, or later, is required.
- ASAI must be enabled on the DEFINITY system Customer Options Form for the system to be fully operational.

DEFINITY Hardware Requirements — Available Slots in Switch Carrier

If you are installing a MAPD in an existing switch, three contiguous slots in a switch carrier are required to house the MAPD system in either a DEFINITY ECS or DEFINITY PROLOGIX as described in the following list. (See Appendix A "PBX Carrier Configuration Worksheets," for worksheets.)

- DEFINITY ECS System carrier — three contiguous slots. For example, slots 16 to 18 (see Figure 2-1). Any slots can be used
- DEFINITY PROLOGIX carrier — slots 6, 7, and the spacer (see Figure 2-2,). Although any slots can be used, If you use slots 6 and 7 in a DEFINITY PROLOGIX, the MAPD takes up only two slots instead of three.

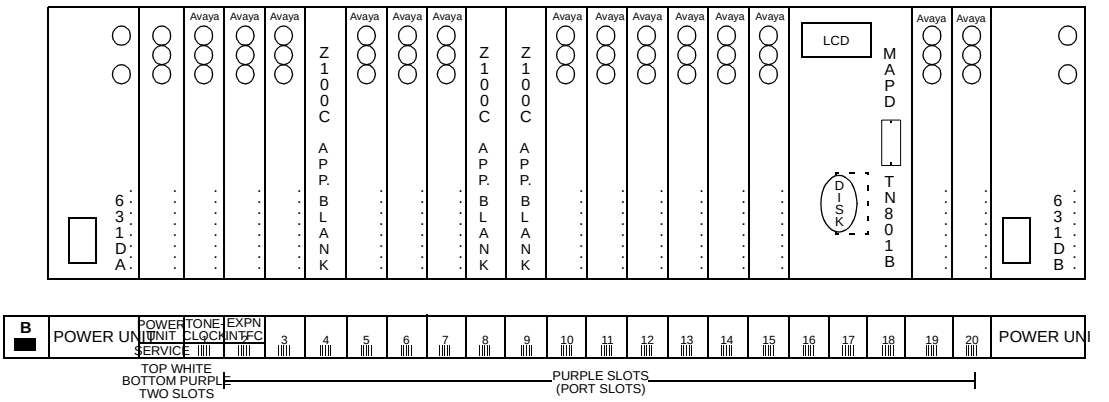

Figure 2-1. MAPD System in a DEFINITY System Carrier

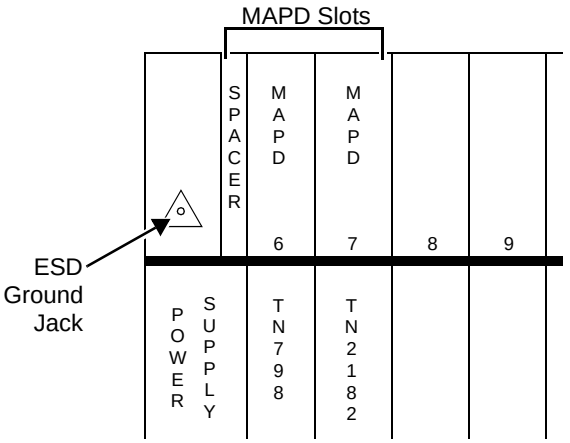

Figure 2-2. MAPD System in a DEFINITY ProLogix Carrier

Identifying the Configuration

Before you set up the MAPD evaluate your configuration requirements and your connectivity arrangements. Figure 2-3 depicts the MAPD cabling connectors and the connectivity arrangements they support.

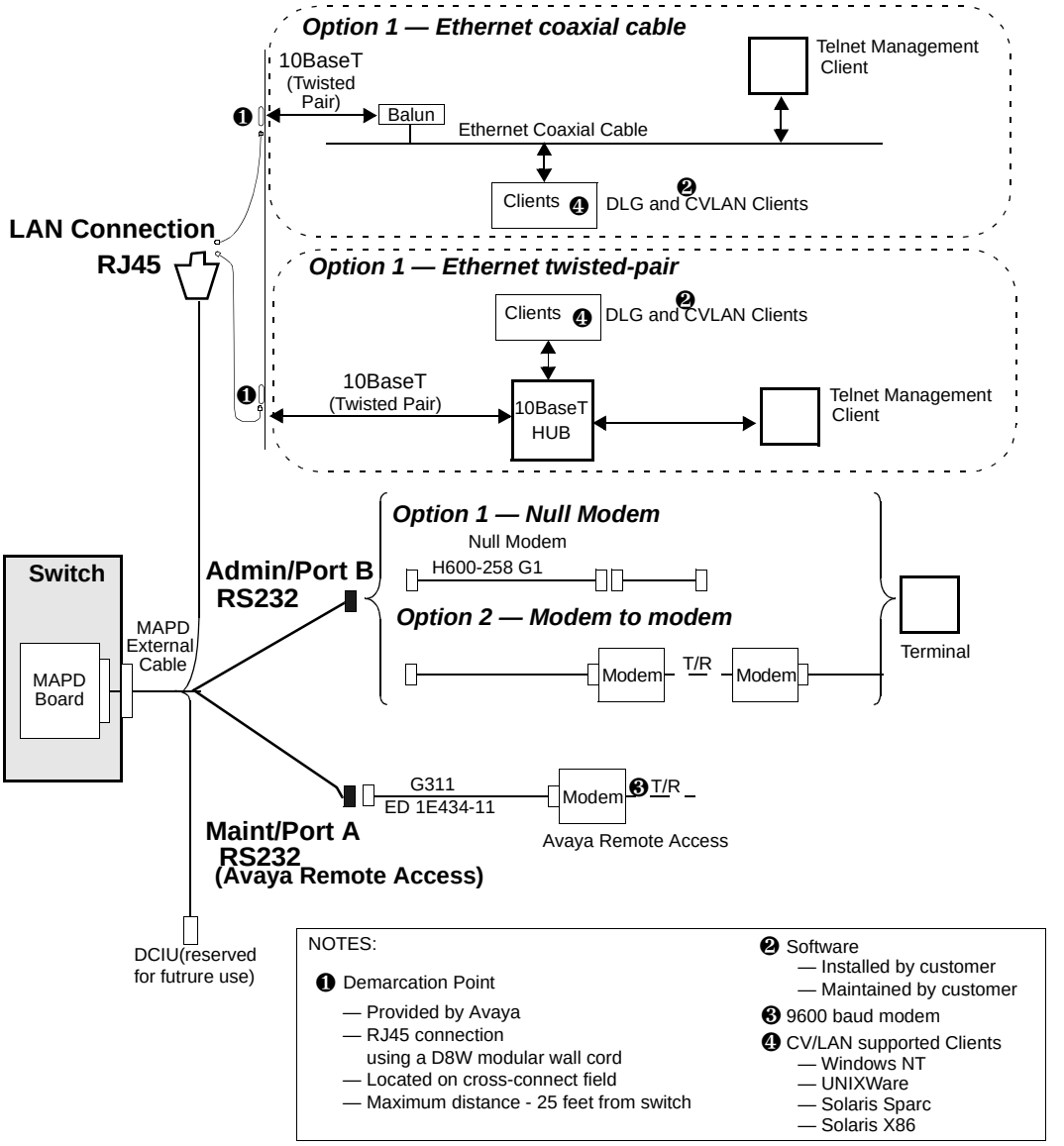

Figure 2-3. MAPD External Cabling and Connection Options

Components in a Typical Configuration

This section describes some of the components depicted in Figure 2-3.

LAN Connection (RJ45)

The LAN Connection area of Figure 2-3 depicts two connection options for a Telnet Management Client: Ethernet coaxial cable or Ethernet twisted pair.

- **Option 1 — Ethernet coaxial cable**

  Reading from right to left, the “Telnet management client” can be any PC that has access to the MAPD (using Telnet, for example). The Telnet management client is connected to a “LAN server,” which could be a CVCT CVLAN Server or a Telephony Services adjunct (for DLG based applications). Notice that the “LAN server” connects via Ethernet to a “Balun,” which, in turn is connected to a 10BaseT twisted pair.(A Balun is required for connecting a **bal**anced line — coaxial — to an **un**balanced line — twisted pair.) The 10Base T, which is an “RJ45 connection” connects to the Ethernet cable on the MAPD external assembly. In a CTI implementation, arrangement A would be used for call control. It is functionally equivalent to Option 2, the Ethernet twisted pair.

- **Option 2 — Ethernet Twisted Pair**

  Reading from right to left, the “Telnet management client” can be any PC that has access to the MAPD (using Telnet, for example). The Telnet management client is connected to a “LAN server,” which could be a CVCT Telephony Server. The “LAN server” connects via 10BaseT (twisted pair) to the Ethernet cable on the MAPD external assembly. In a CTI implementation, arrangement B would be used for call control. It is functionally equivalent to Option 1, the Ethenet coaxial cable.

10Base-T Hub Based LANs

A 10Base-T Hub based LAN is an Ethernet LAN that works on twisted pair wiring, which resembles telephone cabling. 10Base-T Ethernet LANs work on home runs in which the wire from each workstation snakes directly to the 10Base-T Hub (similar to the wiring of a phone system). Advantages of 10BaseT LANs: if one machine crashes, it does not bring down the whole network. 10Base-T Hubs often come with sophisticated management software.

WARNING:

The 10Base-T Ethernet connection is only intended for use within a building. To protect the system from lightning or other external disturbances, a router or LAN device that provides voltage suppression should be used.

Link Integrity

Link integrity must be enabled on the port on which the MAPD is to be connected.

Administration/Port B

Administrative Terminals can connect to the MAPD to provide administrative access to the MAPD with a direct terminal connection.

- **Option 1 — Null Modem**

  Option 1 depicts administrative access to the MAPD using a null modem (a crossover connector that takes the place of two modems). This arrangement is typically used in the “switch room” and is usually considered the primary administrative access method for the local administrator. It is functionally equivalent to Option 2, Modem to Modem.

- **Option 2 — Modem to Modem**

  The section of Figure 1 labeled as D depicts a direct terminal connection to the MAPD using two modems (instead of a null modem.).This arrangement is typically used in the switch room and is usually considered the primary administrative access method for the local administrator. It is functionally equivalent to Option 1, Null Modem.

Maintenance/Port A — Avaya Remote Access

This section of Figure 1 depicts remote access to a MAPD via a modem. For domestic applications this is used by craft services personnel for diagnostics.

Planning: Task 2 — Determining the Location for the MAPD in the Switch

Use this section to determine where the MAPD is to be housed in the switch.

Arranging Circuit Packs

If you need to rearrange in the DEFINITY switch to accommodate the MAPD system assembly, use "Worksheet A-2: Port Assignments (for Carrier Rearrangement)" to plan the location of the circuit packs before physically rearranging them.

Slot and Carrier Restrictions

A maximum of three MAPD system assemblies per carrier are allowed. One per carrier is preferred so that one carrier power supply failure will not take down multiple units. The MAPD assembly occupies three contiguous slots in the DEFINITY system Cabinet. The rightmost slot must be a port slot, (indicated by purple color). See Appendix A, ‘‘PBX Carrier Configuration Worksheets,’’ for information about rearranging circuit packs and slot restrictions.

Multi-carrier Cabinet Requirements

Placement in a DEFINITY system multi-carrier cabinet should be such that the MAPD system assemblies are not vertically aligned.

Locating and Identifying MAPD System Slots

The system assembly requires three contiguous port slots in the switch carrier. In this description, the three slots are referred to as the first, second, and third slots with the understanding that they can be any three contiguous port slots.

How MAPD Slots are Numbered

The slots are numbered from left to right on the front panel of the switch cabinet, and from right to left on the rear panel as shown in Figure 2-3, and Figure 2-4. The three port slots are occupied by the MAPD system assembly as follows:

- The first and second slots are covered by the Pentium processor card and PCI/ISA side plane and are not connected to the switch backplane or amphenol connectors.
- The third slot is connected to the TN801B MAPD Board

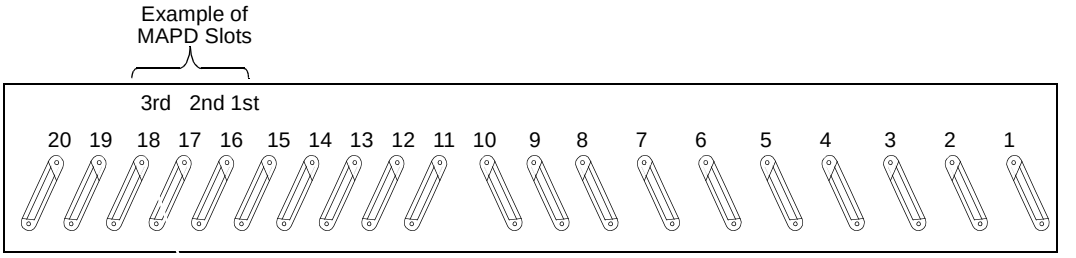

Figure 2-4. Rear-Panel View of DEFINITY ECS System

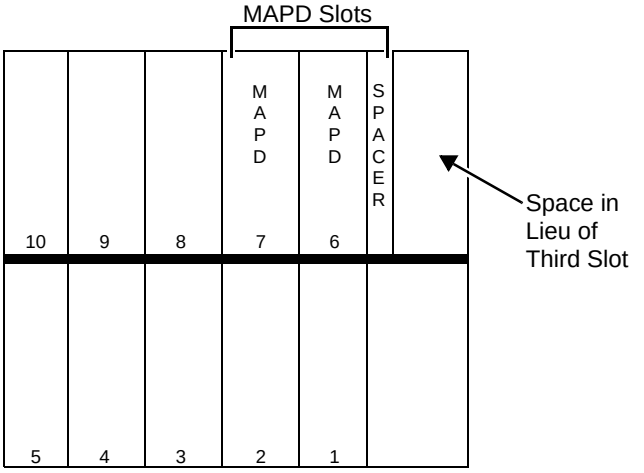

Figure 2-5. Rear View of MAPD in DEFINITY ProLogix

Planning: Task 3 — Familiarizing Yourself with the MAPD System Assembly

This section provides a diagram of the complete MAPD system assembly (Figure 2-6) along with a diagram of the eight-character LCD display on the front panel of the TN801B MAPD (Figure 2-1.)

See Appendix C to be sure that all the required parts have been ordered and shipped correctly.

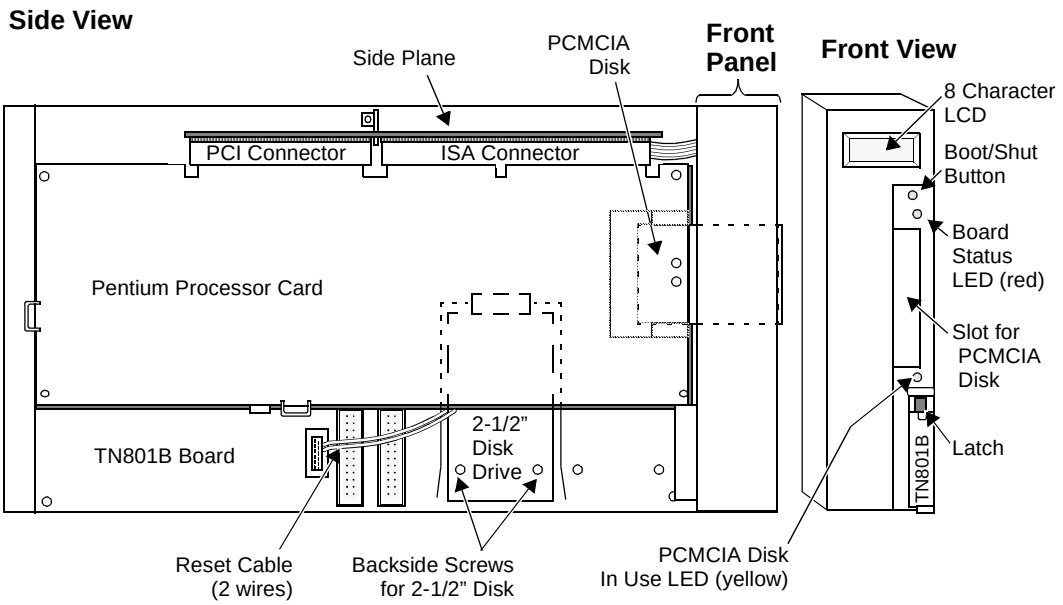

Figure 2-6. MAPD System Assembly (J58890MA-1)

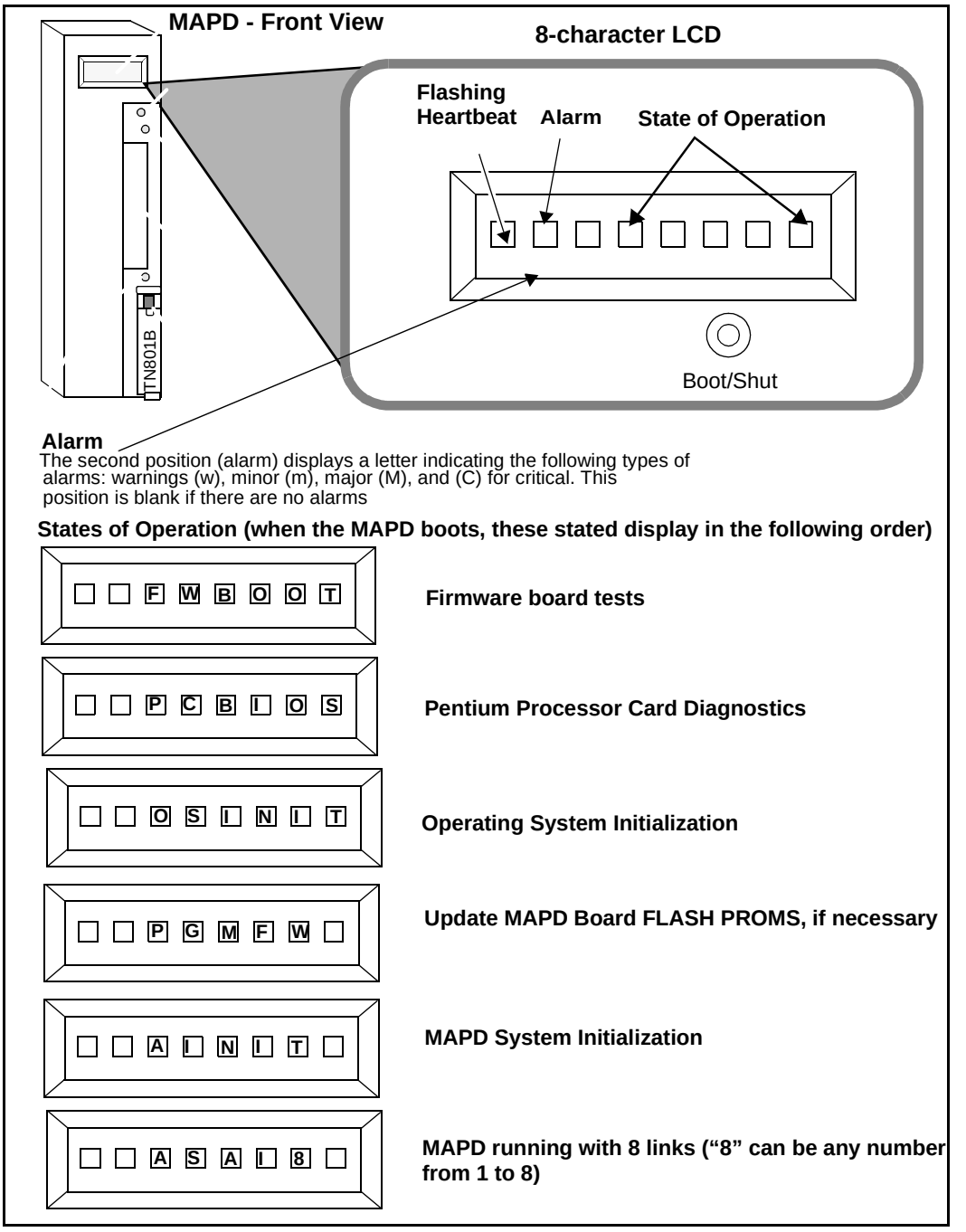

Figure 2-7. MAPD System LCD Display

Installation: Task 1 — Gathering the Required Tools

To install a MAPD system, you need the following tools:

- Narrow width, flat-blade screwdriver
- Antistatic grounded wrist strap
- Punch-down tool

Installation: Task 2 — Reviewing the Safety Guidelines

Always follow these precautions whenever working with electronic equipment.

WARNING:
Electronic equipment can be damaged by electrostatic discharge. Do not touch any electronic component unless you are properly grounded.

DANGER:
Do not touch the switch backplane while installing the MAPD system. The backplane contains dangerous voltage and current.

To prevent damage to the equipment and yourself, follow these guidelines:

- Make sure you are familiar with the procedures necessary to prevent electrostatic damage to the equipment.
- Properly ground a wrist strap.
- Place the grounded wrist strap on your bare wrist. (The wrist strap must contact your bare skin directly — do not wear it over your clothes.)
- Do not remove the system assembly from the polyethylene bag until:
  - — Your wrist strap is on your wrist and properly grounded.
  - — You have made room in the switch carrier and you are ready to insert the system assembly in the carrier.
  - — The system assembly adapter cable is appropriately connected to the back of the switch (see Task 5, Step 2 in the section, "Installation: Task 3 — Installing the MAPD Assembly in the Switch," in this chapter).

If you need to work on the system assembly — that is, disassemble it — place the assembly on a grounded antistatic work mat.

Installation: Task 3 — Installing the MAPD Assembly in the Switch

This section describes the tasks needed to install the MAPD system hardware and peripheral hardware. The MAPD system installation tasks are the same for all switch types. These tasks include:

- Task 1: Install the MAPD system assembly

  Before beginning these tasks, refer to the following worksheets:

  — "Worksheet A-1: Port Slot Assignments (Before Carrier Arrangement)"

  — "Worksheet A-2: Port Assignments (for Carrier Rearrangement)"

  — "Worksheet A-3: Port Slot Locations for the MAPD System Assembly"

Appendix B, “Terminal and Modem Option Settings”

- “Worksheet B-1: Terminals/Modems”
- Task 2: Connect to the LAN
- Task 3: Install the terminal (optional)
- Task 4: Connect the Maintenance modem
- Task 5: Finalize and test the hardware

Precautions

You must follow this precautionary guideline for all installation scenarios.

WARNING:

To prevent damage to the MAPD system assembly, make sure that you (or the factory, for new switches) have connected the system assembly adapter cable to the port connector on the back of the switch (as described in Task 5, Step 2, "Installation: Task 3 — Installing the MAPD Assembly in the Switch") before you insert the system assembly in the switch carrier.

You can install the system assembly in the switch when the switch is powered on or off. When the assembly is inserted in the slots of the switch carrier, it will automatically power up, run diagnostics, and boot. To avoid a disk crash, never remove the assembly without first completing the shutdown procedure to shut down the MAPD system (and allowing the disk to completely spin down). For the same reason, do not cycle the power on the switch (for example, during switch acceptance tests) once the system assembly is inserted unless you have first shut down the MAPD system. Refer to the "Reset System (DLG and CV/LAN)" section in Chapter 4 for the shutdown procedure.

Installing the MAPD in an AC Powered Switch

Using "Worksheet A-3: Port Slot Locations for the MAPD System Assembly," follow the steps below to install the system assembly.

1. Remove any existing cables from the third slot of the three contiguous slots reserved for the MAPD system. For example, if you are going to install the MAPD system in slots 7 through 9 of carrier A, remove the I/O cables from slot 9. (This is the slot that provides connectivity to the TN801B MAPD circuit pack.)
2. Attach the male D-type amphenol connector from the MAPD Board cable (H600-475 G-2) to the MAPD Board (TN801B) port connector in the third slot of the MAPD system slots on the back of the switch. (See Figure 2-8.)

NOTE:
You must connect this adapter cable directly to the port connector on the switch. If you install another cable between the switch and this cable, the MAPD system will not operate correctly.

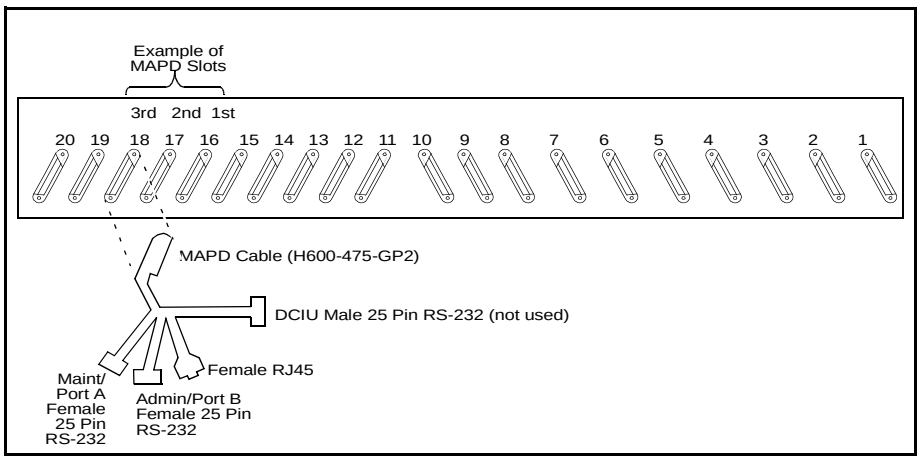

Figure 2-8. Attaching the MAPD Cable

3. Insert the SanDisk PCMCIA FlashDisk that came with the system in the rightmost PCMCIA slot in the faceplate of the TN801B board. The top of the disk should be facing left.

4. Insert the system assembly (see Figure 2-9) into the switch cabinet as follows:

   Holding the system assembly by the top and bottom edges of the TN801B MAPD Board, line up the MAPD Board with the bottom guide of the right most of the 3 slots reserved for the MAPD system in the switch carrier.

   CAUTION:
   The faceplate of the MAPD system is designed to be easily removed. Do not lift the assembly with the faceplate alone.

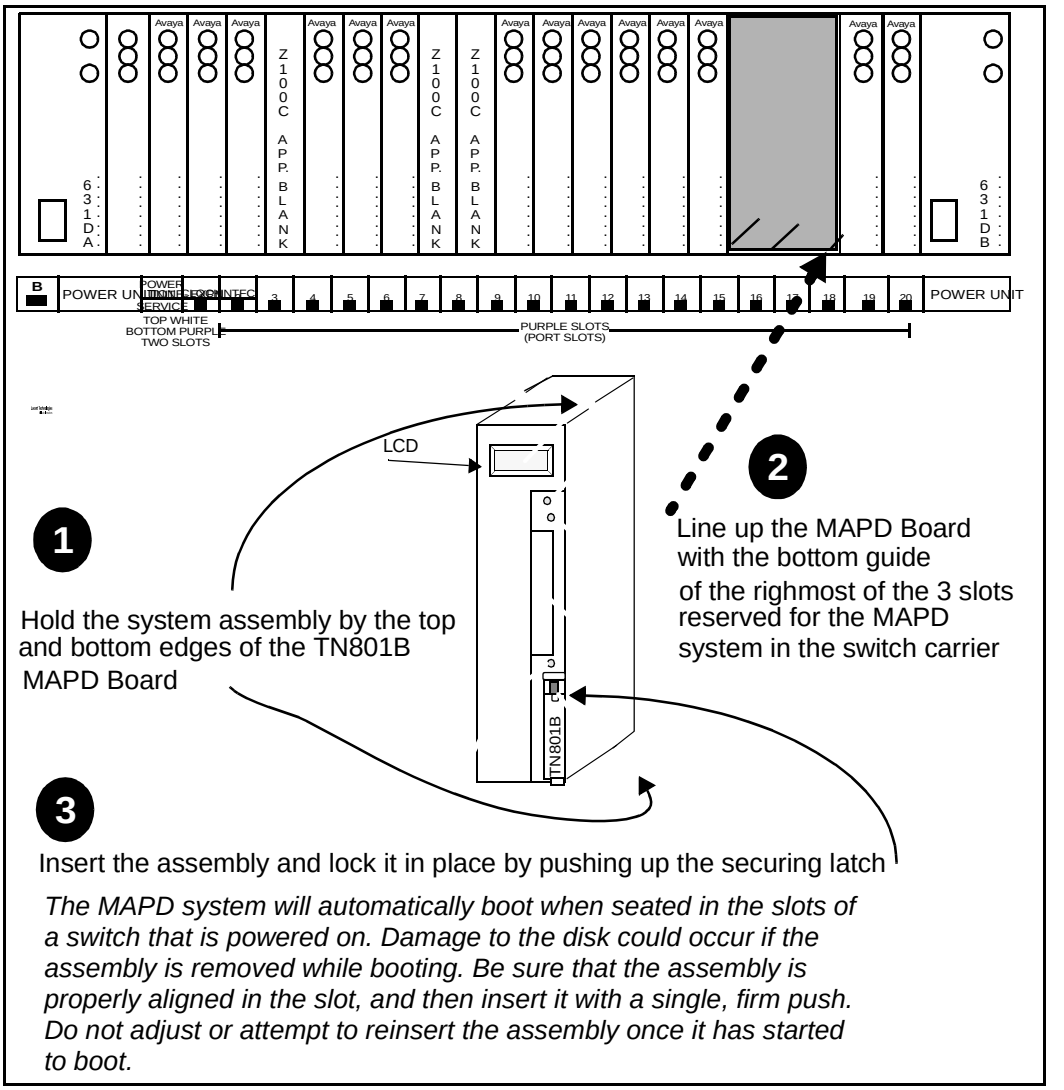

Figure 2-9. Installing the TN801B in a DEFINITY ECS (AC)

5. Insert the assembly and lock it in place by pushing up the securing latch. If the switch is powered on, the MAPD system will boot automatically. If the switch is not powered on, wait until it is, and then proceed to Step 6.

   WARNING:
   The MAPD system will automatically boot when seated in the slots of a switch that is powered on. Damage to the disk could occur if the assembly is removed while booting. Be sure that the assembly is properly aligned in the slot, and then insert it with a single, firm push. Do not adjust or attempt to reinsert the assembly once it has started to boot.

6. As the MAPD system comes up, watch the Liquid Crystal Display on the faceplate (see Figure 2-7). The LCD identifies the MAPD states and alarms. When the MAPD system is coming up, the LCD should display the following states (in order):

   - **`FWBOOT`** (firmware board tests)
   - **`PCBIOS`** (Pentium processor card diagnostics)
   - **`OSINIT`** (operating system initialization)
   - **`PGMFW`** (update MAPD FLASH PROMS, if necessary)
   - **`AINIT`** (MAPD System Initialization)

     NOTE:
     If the system does not come up to the AINIT state within 10 minutes (4 to 7 minutes is average), contact the Technical Service Center (TSC) for assistance.

   - **`ASAI` *x*** (MAPD running with ***x*** established ASAI links)

Installing the MAPD in a DC Powered Switch

Using "Worksheet A-3: Port Slot Locations for the MAPD System Assembly," follow the steps below to install the system assembly.

1. Remove any existing cables from the third slot of the three contiguous slots reserved for the MAPD system. For example, if you are going to install the MAPD system in slots 7 through 9 of carrier A, remove the I/O cables from slot 9. (This is the slot that provides connectivity to the TN801B MAPD circuit pack.)
2. Connect the MAPD system assembly adapter cable to the port connector on the back of the switch. (See Figure 2-10)

   Attach the male D-type amphenol connector on the MAPD Board cable (H600-475 G-2) to the MAPD Board (TN801B), the third slot of the MAPD system slots.

   NOTE:
   You must connect this adapter cable directly to the port connector on the switch. If you install another cable between the switch and this cable, the MAPD system will not operate correctly.

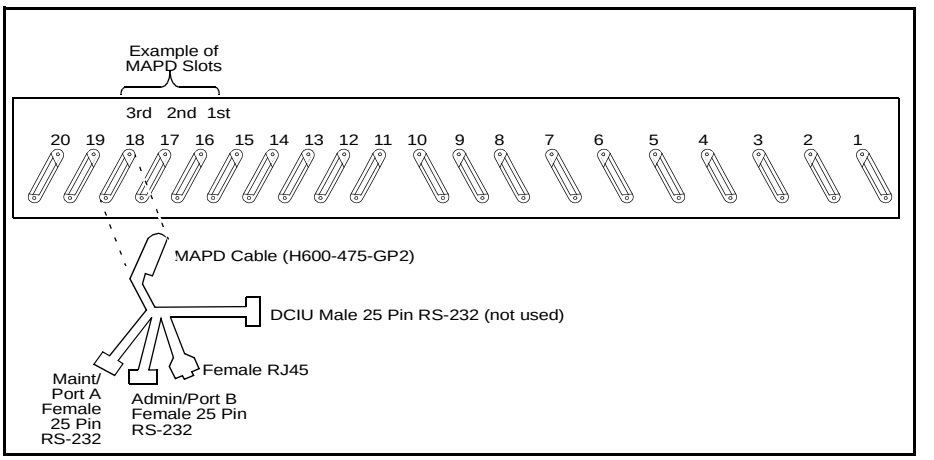

Figure 2-10. Attaching the MAPD Cable

3. Install the 116A isolating data interface

   a. Attach the male end of a null modem (supplied with the MAPD system PEC) to the RS-232C connector on the MAPD external cable labeled Admin/Port B. Attach the male connector of a 116A to the other end of the null modem.

   b. If you are attaching anything other than an isolated modem to the Maint/Port A connector on the MAPD cable, you must install an isolator on this interface also. Attach the male end of a null modem (supplied with the MAPD system PEC) to the RS-232C connector on the MAPD external cable labeled
   Maint/Port A. Attach the male connector of a 116A to the other end of the null modem.

4. Insert the SanDisk PCMCIA FlashDisk that came with the system in the rightmost PCMCIA slot in the faceplate of the TN801B board. The top of the disk should be facing left.

5. Insert the system assembly (see Figure 2-10) into the switch cabinet as follows:

   Holding the system assembly by the top and bottom edges of the TN801B MAPD Board, line up the MAPD Board with the bottom guide of the right most of the 3 slots reserved for the MAPD system in the switch carrier.

   CAUTION:
   The faceplate of the MAPD system is designed to be easily removed. Do not lift the assembly with the faceplate alone.

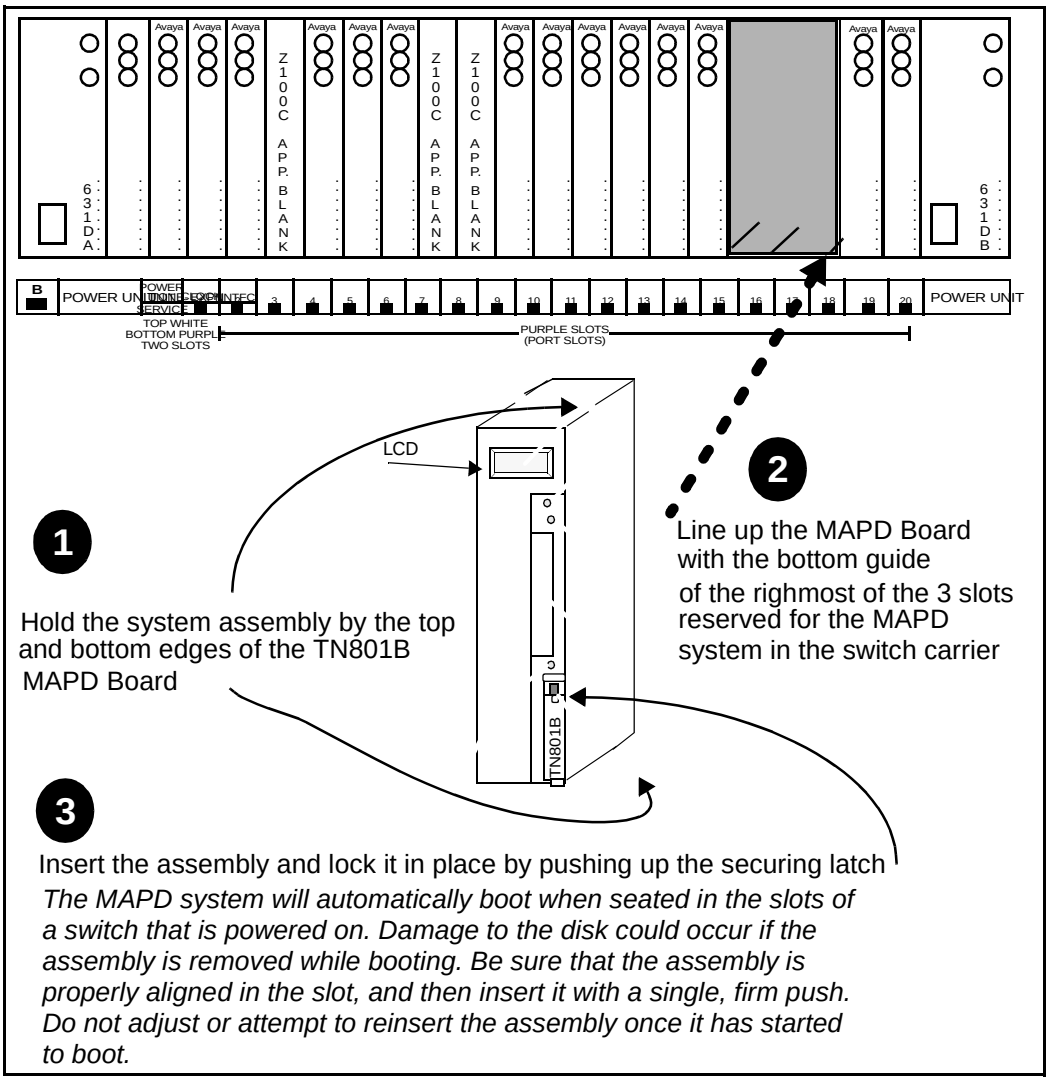

Figure 2-11. Installing the TN801B in a DEFINITY ECS (DC)

6. Insert the assembly and lock it in place by pushing up the securing latch. If the switch is powered on, the MAPD system will boot automatically. If the switch is not powered on, wait until it is, and then proceed to Step 6.

WARNING:

The MAPD system will automatically boot when seated in the slots of a switch that is powered on. Damage to the disk could occur if the assembly is removed while booting. Be sure that the assembly is properly aligned in the slot, and then insert it with a single, firm push. Do not adjust or attempt to reinsert the assembly once it has started to boot.

7. As the MAPD system comes up, watch the Liquid Crystal Display (LCD) on the faceplate (see Figure 2-7). The LCD identifies the MAPD states and alarms. When the MAPD system is coming up, the LCD should display the following states (in order):
   - **FWBOOT** (firmware board tests)
   - **PCBIOS** (Pentium processor card diagnostics)
   - **OSINIT** (operating system initialization)
   - **PGMFW** (update MAPD FLASH PROMS, if necessary)
   - **AINIT** (MAPD System Initialization)

     NOTE:
     If the system does not come up to the AINIT state within 10 minutes (4 to 7 minutes is average), contact the Technical Service Center (TSC) for assistance.

   - **ASAI *x*** (MAPD running with ***x*** established ASAI links)

Planning: Task 4 — Connecting to the LAN

The MAPD Board cable has four connectors available for outside connections:

- RJ45 Local Area Network (LAN)
- Admin/Port B, RS-232 (Local administration port)
- Maint/Port A, RS-232 (Remote Maintenance Port)
- DCIU, RS-232 (Reserved for future use)

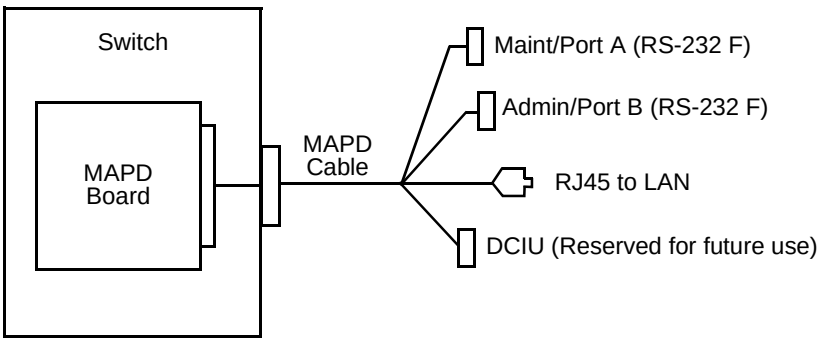

Figure 2-12. MAPD Board Cable Connections

Setting Up the LAN Connection and Establishing the Service Boundary

Avaya is responsible for connecting the RJ45 LAN connector to the customer LAN — the customer LAN is the service boundary. Here are the basic responsibilities of both the customer and Avaya.

Customer Responsibilities

The customer is responsible for the following:

- A 10Base-T twisted pair cable with a male RJ-45 connector at the wall field, no further than 25 feet from the back of the switch where MAPD resides.
  - Typically a 104A connecting block is mounted on the wall within reach of this connector.
- LAN administration on the MAPD system.
- After cutover, the customer is also responsible for maintaining the TCP/IP addresses, and administration on the MAPD system unless otherwise specified by contract.

Avaya Responsibilities

Installing the MAPD in the switch

- Connecting to the customer LAN (Avaya service technicians dispatched for MAPD system installation and maintenance are not authorized to troubleshoot the customer LAN
  - Installing a 104A connecting block, if necessary
- Connecting the Administrative Terminal
- Connecting the remote terminal
- Initial administration (described in Chapter 3)

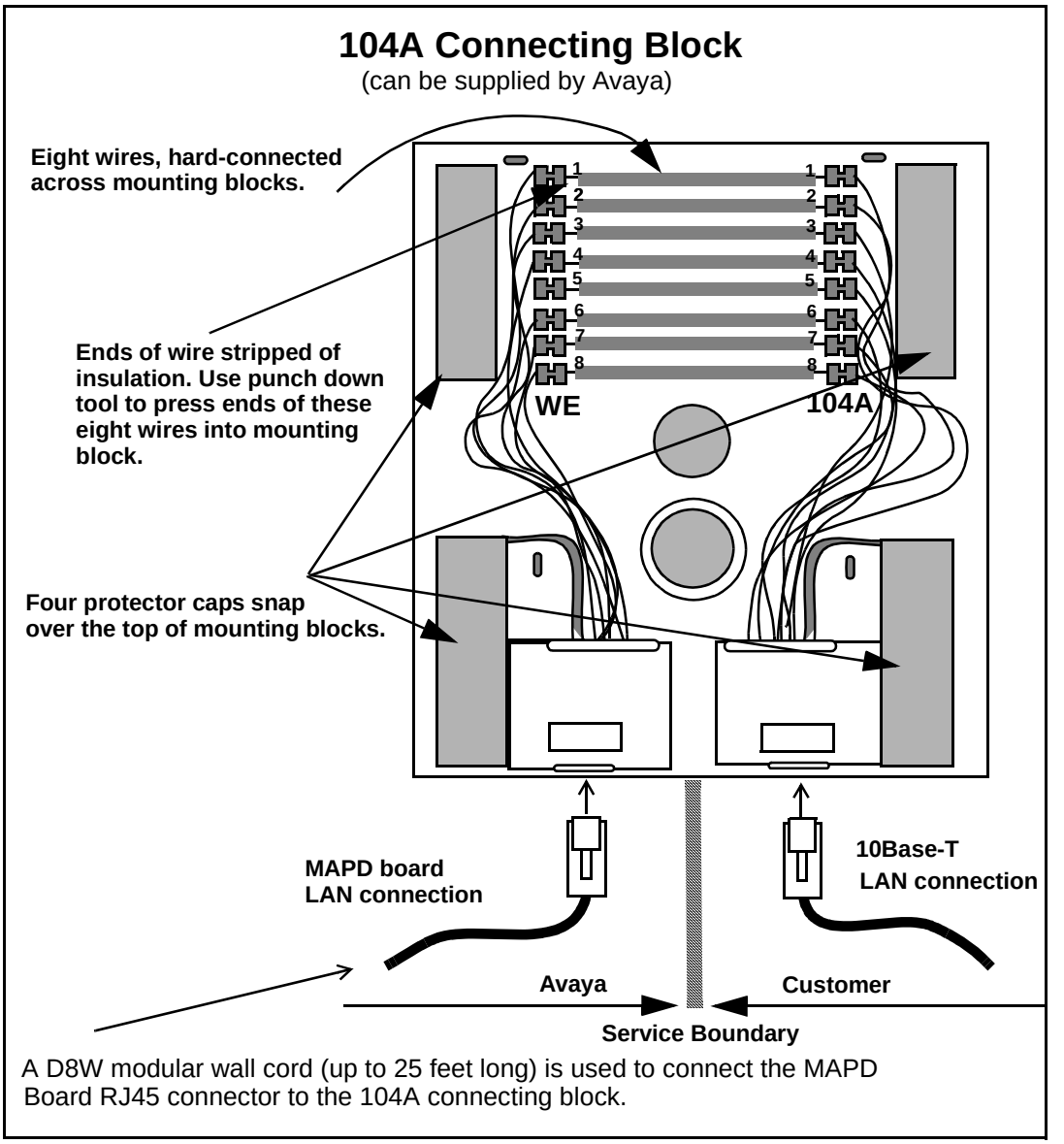

Figure 2-13. 104A Connecting Block

Planning: Task 5 — Evaluating the Terminal Requirements (Optional)

This section contains several installation scenarios that address different site requirements:

- Installing a terminal that uses a Direct Connection
  - — AC powered switch
  - — DC powered switch
- Installing a Terminal that uses a Modem

NOTE:
Installing the terminal is an optional task, but the temporary installation described below is recommended to facilitate initial administration of the MAPD system.

Temporary vs. Permanent Terminal Installations

You can install a terminal or a terminal emulator device, such as a PC or laptop, to perform administration and maintenance operations. The terminal may be permanently installed, or may be temporarily installed when direct administration or maintenance is desired. The connection for a directly attached terminal is always available for Avaya services personnel. This terminal is usually connected via a direct cable to Admin/Port B, but can be connected remotely if desired.

NOTE:
Once initial administration is completed, the directly connected terminal may be disconnected and further administration and maintenance may be accomplished over the LAN with a terminal emulator that supports Telnet access.

Direct Connections vs. Modem Connections

The terminal can be connected to Admin/Port B by either a direct connection or by using modems.

- If you are connecting a PC using G3-MA software (formerly SAT-PC) as a MAPD administration/maintenance terminal, see *DEFINITY Communications System Generic 3 Management Applications Station Provisioning*, 555-229-202, for installation instructions.
- If you are connecting a generic PC with a terminal emulation package, you must ensure that the terminal emulation package is set to support a terminal type listed in Appendix B, “Terminal and Modem Option Settings.”

The MAPD Admin Port is Configured as Data Terminal Equipment (DTE)

Keep in mind that the MAPD system Admin/Port B is configured as a (DTE), data terminal equipment. Therefore, you may need to install a null modem to complete the DTE/DCE pair when connecting the Admin/Port B to a terminal.

MAPD Port Usage

The MAPD external cable has three RS-232C connectors labeled Maint/Port A, Admin/Port B and DCIU (reserved for future use). The administration and maintenance terminal should be connected to Admin/Port B. Some system diagnostic messages, created only when the system is initializing, are sent to Maint/Port A. These additional messages are not useful during normal operation of the system.

Installing a Terminal via a Direct Connection

This section includes two installation scenarios, one for a DC Switch, and one for an AC Switch.

Installation: Task 4a — Installing a Terminal Using a Direct Connection to a DC Switch

Refer to Figure 2-14 (ignore the shaded area of the figure) while you perform this task. Notice that the RS232 Admin/Port B connector can accommodate either a DTE connection or a DCE connection. Use the connection method that is appropriate for your installation.

NOTE:
This task assumes that you have connected a null modem and 116A isolator to the Admin/Port B connector on the MAPD cable as shown in Task 5, Step 3 "Installation: Task 3 — Installing the MAPD Assembly in the Switch".

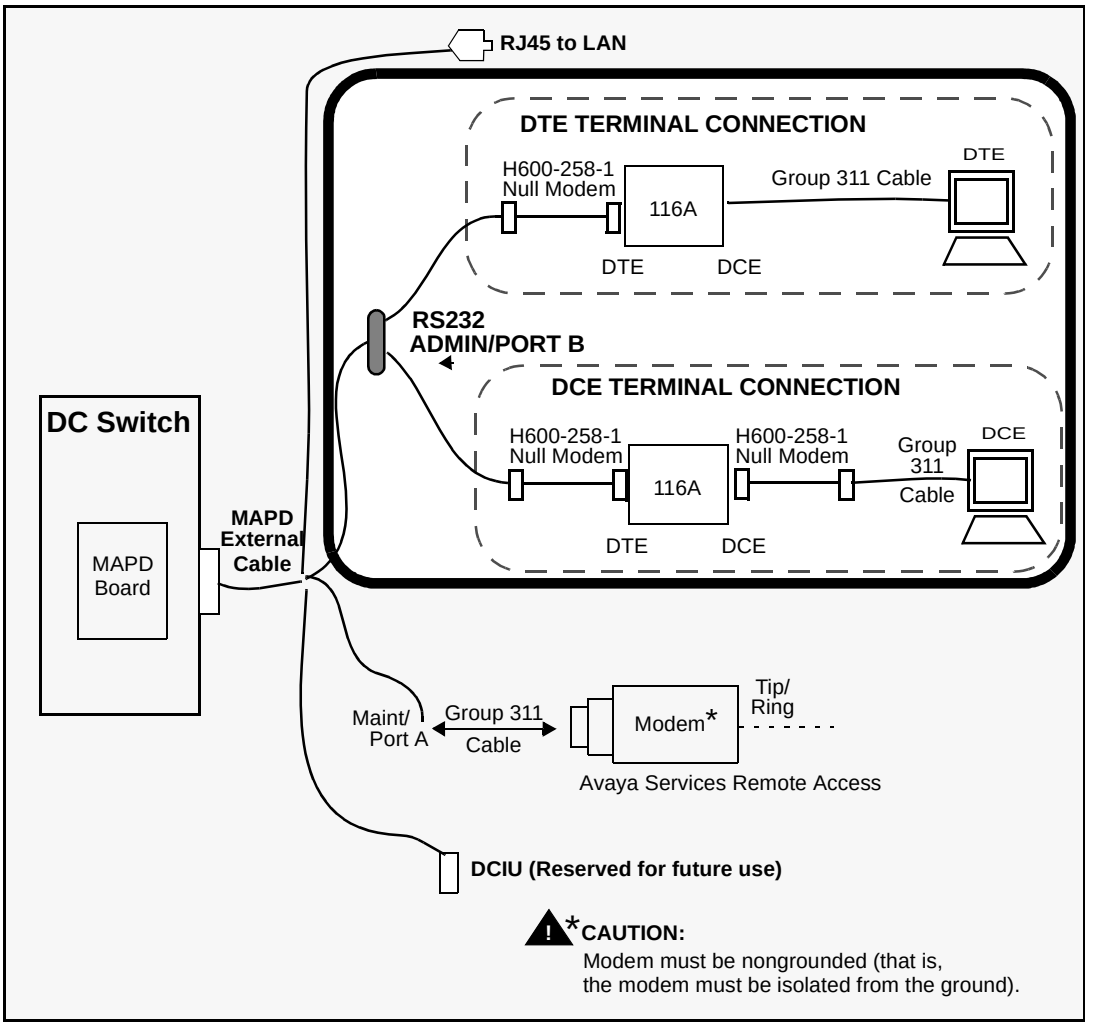

Figure 2-14. Installing a Terminal via Direct Connection in a DC Switch

Installation Procedure for a Terminal Using a Direct Connection to a DC Switch

1. If you are installing a new terminal, unpack it according to the instructions supplied with the terminal.
2. Place the terminal on a suitable table within 15 feet of the switch cabinet if you have a 20-foot ED1E434-11G311 cable, or within 45 feet if you have a 50-foot ED1E434-11G311 cable, and connect the keyboard.

3. Follow Step a *or* b to connect the terminal to the MAPD system.
   a. If connecting to a DCE port,
      1. Attach one end of an ED1E434-11G311 cable (supplied with the MAPD system PEC) to the female connector on 116A isolator.
      2. Attach the other end of the cable to the RS-232 connector on the back of the terminal. Then go to step 4.
   b. If connecting to a DTE port, attach the male end of another H600-258 G-1 null modem to the female connector on the 116A isolator.
      - For a 715 BCT, attach the other end of the ED1E434-11G311 cable to the DCE connector on the back of the terminal. Then go to step 4.
      - For a 513 or equivalent BCT, attach the other end to the female connector on an H600-258 G-1 null modem.
      1. Attach one end of an ED1E434-11G311 cable (supplied with the MAPD system PEC) to the female end of the null modem.
      2. Then connect the other end of the G311 cable to the RS-232 connector on the back of the terminal. Go to next step.
4. Plug the terminal power cord into a wall outlet and power on the terminal.
5. Set the terminal options. See Appendix B, ‘‘Terminal Option Settings,’’ for a complete list of option settings for supported terminals.

NOTE:
When installing a serial printer on all but a 610 or 615 BCT, set the options on the printer as described in the manual supplied with the printer, then set the corresponding options on the terminal to match. On the 610/615, set the terminal options first, then set the printer options.

- If the terminal is installed correctly (and the MAPD system is in either the AINIT or ASAI state), the screen displays the login prompt.
- If the terminal does not display the login prompt when the MAPD system is in the above state, try pressing **Return** a few times. If the login prompt still does not appear, write down the state displayed on the LCD and then see the troubleshooting procedure for terminal connections in Appendix D, ‘‘Troubleshooting Procedure.’’

Installation: Task 4b — Installing a Terminal Using a Direct Connection to a DC Switch

Refer to Figure 2-15 (ignore the shaded area of the figure) while you perform this task. Notice that the RS232 Admin/Port B connector can accommodate either a DTE connection or a DCE connection. Use the connection method that is appropriate for your installation.

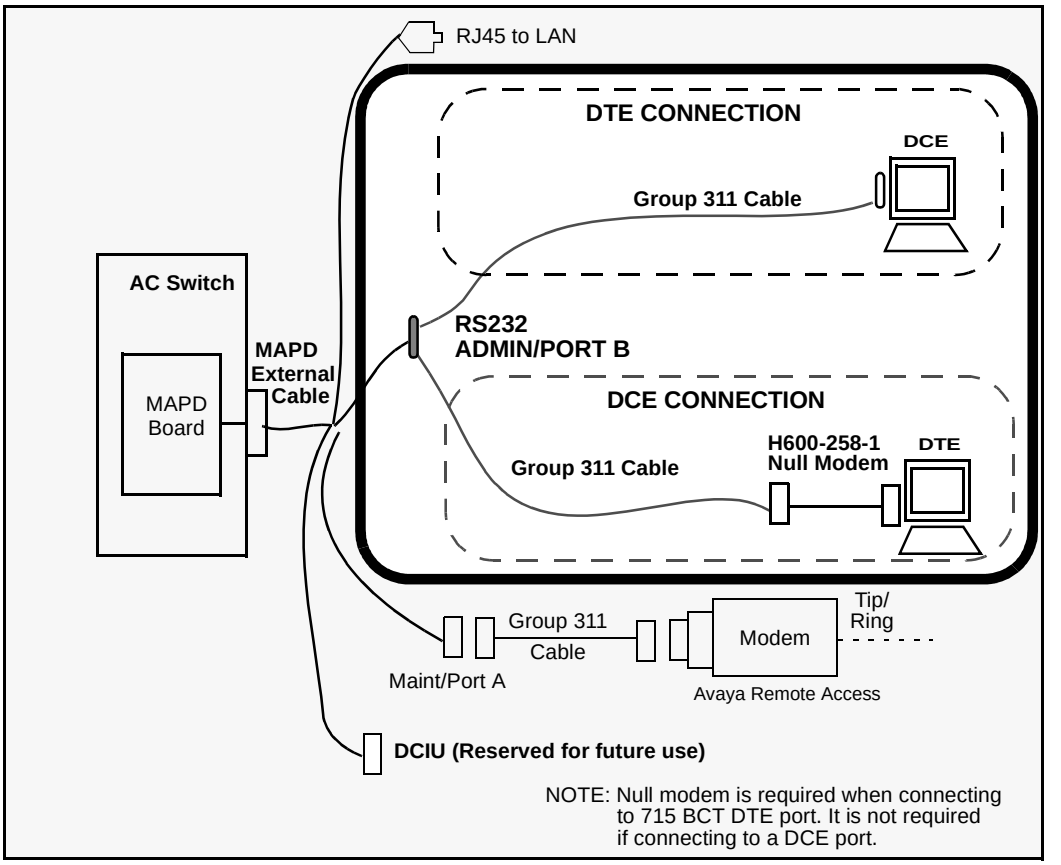

Figure 2-15. Installing a Terminal Via Direct Connection in an AC Switch

Installation Procedure for a Terminal Using a Direct Connection to a DC Switch

1. If you are installing a new terminal, unpack it according to the instructions supplied with the terminal.
2. Place the terminal on a suitable table within 15 feet of the switch cabinet if you have a 20-foot ED1E434-11G311 cable, or within 45 feet if you have a 50-foot ED1E434-11G311 cable, and connect the keyboard.
3. Attach one end of an ED1E434-11G311 cable (supplied with the MAPD system PEC) to the RS-232 connector labeled Admin/Port B on the MAPD external cable.
4. Follow Step a *or* b.
   a. If connecting to a DCE port, attach the other end of the ED1E434-11G311 cable to the RS-232 connector on the back of the terminal. Then go to Step 4.
   b. If connecting to a DTE port, attach the male end of an H600-258 G-1 null modem to the RS-232 connector on the back of the terminal.
5. Plug the terminal power cord into a wall outlet and power on the terminal.
6. Set the terminal options. See Appendix B, ‘‘Terminal Option Settings,’’ for a complete list of option settings for supported terminals.

NOTE:
When installing a serial printer on all but a 610 or 615 BCT, set the options on the printer as described in the manual supplied with the printer, then set the corresponding options on the terminal to match. On the 610/615, set the terminal options first, then set the printer options.

- If the terminal is installed correctly (and the MAPD system is in either the AINIT or ASAI state), the screen displays the login prompt.
- If the terminal does not display the login prompt when the MAPD system is in the above state, try pressing **Return** a few times. If the login prompt still does not appear, write down the state displayed on the LCD and then see the troubleshooting procedure for terminal connections in Appendix D, ‘‘Troubleshooting Procedure.’’

Installation: Task 4c — Install a Terminal Using Modem Connections

This task describes how to connect a terminal via a modem to Admin/Port B of the MAPD. Refer to Figure 2-16 (ignore the shaded area of the figure), while you perform this task. To make sure the modems that you are installing are on the list of supported peripherals, see Appendix B, "Worksheet B-1: Terminals/Modems."

NOTE:
This task can also be used for remote connection to the Maint/Port A.

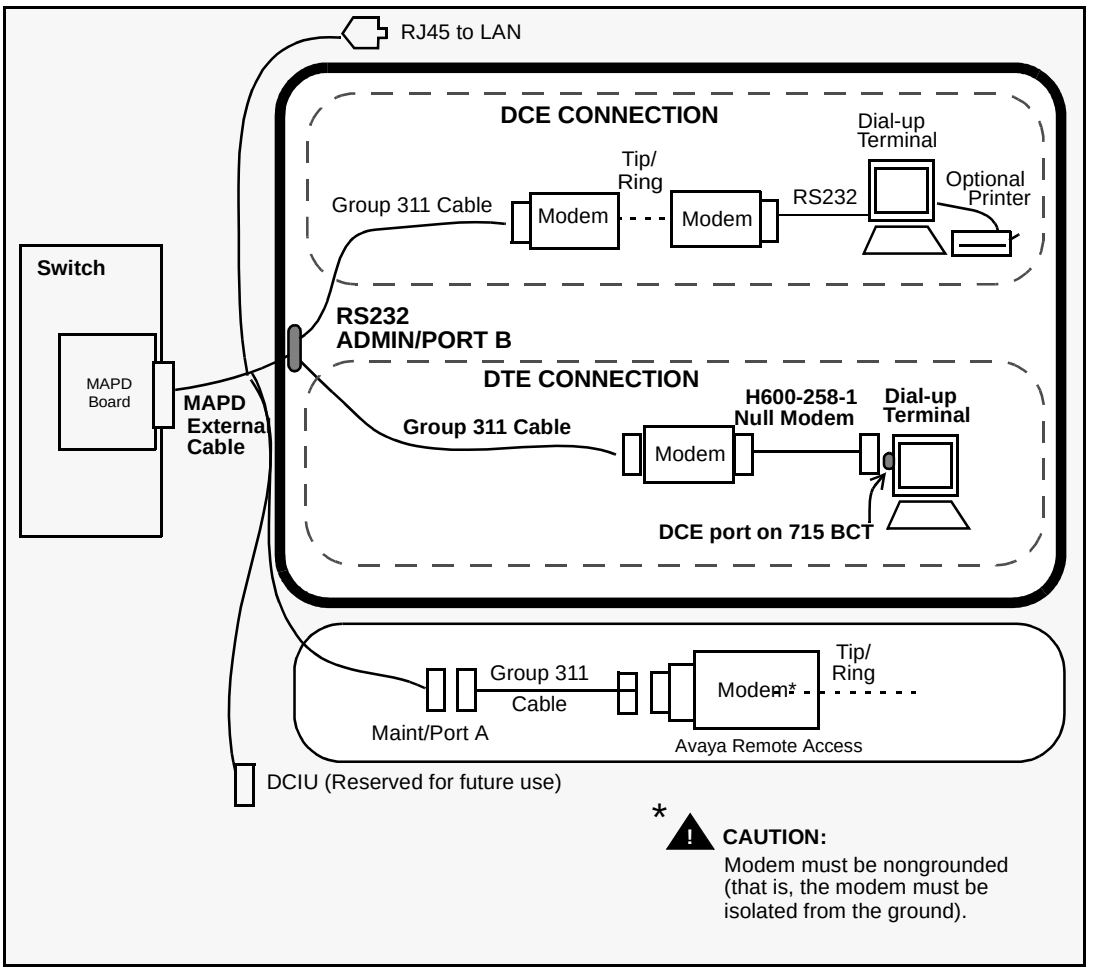

Figure 2-16. Connecting a terminal to the MAPD via Modem

Installation Procedure for a Terminal Using Modem Connections

1. In the room where the switch and MAPD system are located, place one modem between the MAPD system and a telephone jack close enough so that the cables can easily reach. Also make sure the modem is within reach of a power outlet.
2. Attach one end of the ED1E434-11G311 cable to the RS-232 connector labeled Admin/Port B on the MAPD cable. Attach the other end to the female 25-pin connector on the modem.
3. Attach the connector on one end of a modular cord to the modem, and attach the other connector to a telephone outlet.
4. Plug the modem power cord into a wall outlet and power on the modem.
5. Set the modem options, refer to Appendix B, ''Terminal and Modem Option Settings,'' for a list of option settings for supported modems and terminals.
6. Connect a modem to the terminal (locally or remotely) as follows:
   a. If you are installing a new terminal, unpack it according to the instructions supplied with the terminal.
   b. Place the terminal on a suitable table and connect the keyboard.
   c. Attach one end of an RS-232 cable to a serial RS-232 port on the terminal (the DTE port on a 715 BCT), and attach the other end to the modem (if it is not already connected).

      NOTE:
      If you connect the modem to the DCE port on a 715 BCT, you must also connect a null modem cable between the modem and the 715 BCT.

   d. Attach the connector on one end of a modular cord to the modem, and attach the other end to a telephone outlet.
   e. Plug the modem power cord into a wall outlet.
   f. Plug the terminal power cord into a wall outlet.
7. Power on the terminal and modem.

8. Set the options on the terminal and modem. Refer to Appendix B, ‘‘Terminal and Modem Option Settings,’’ for a list of option settings for all supported terminals and modems.

   NOTE:
   When installing a serial printer on all but a 610 or 615 BCT, set the options on the printer as described in the manual supplied with the printer, then set the corresponding options on the terminal to match. On the 610/615, set the terminal options first, and then set the printer options.

9. At the terminal, enter AT. If the modem is installed correctly, it responds with “OK” (written on the terminal screen).
10. Enter ATDT and the telephone number of the modem connected to the MAPD system Admin port (listed in Appendix B).
    - If the terminal is installed correctly (and the MAPD system is in either ASAI or AINIT state), the screen displays the login prompt.
    - If the terminal does not display the login prompt when the MAPD system is in one of the above states, try pressing **Return** a few times. If the login prompt still does not appear, write down the state displayed on the LCD, and then see the procedure for terminal connections in Appendix D, ‘‘Troubleshooting Procedure.’’
11. Log in to the MAPD system (see Chapter 3,). If you can log in successfully, the modem and terminal options are set correctly.

Installation: Task 5 — Connect the Maintenance Modem

For this task, make sure you have the correct ED1E434-11G311 cable (in a length between 5 and 50 feet). Refer to Figure 2-17 (ignore the shaded areas) as you complete this task.

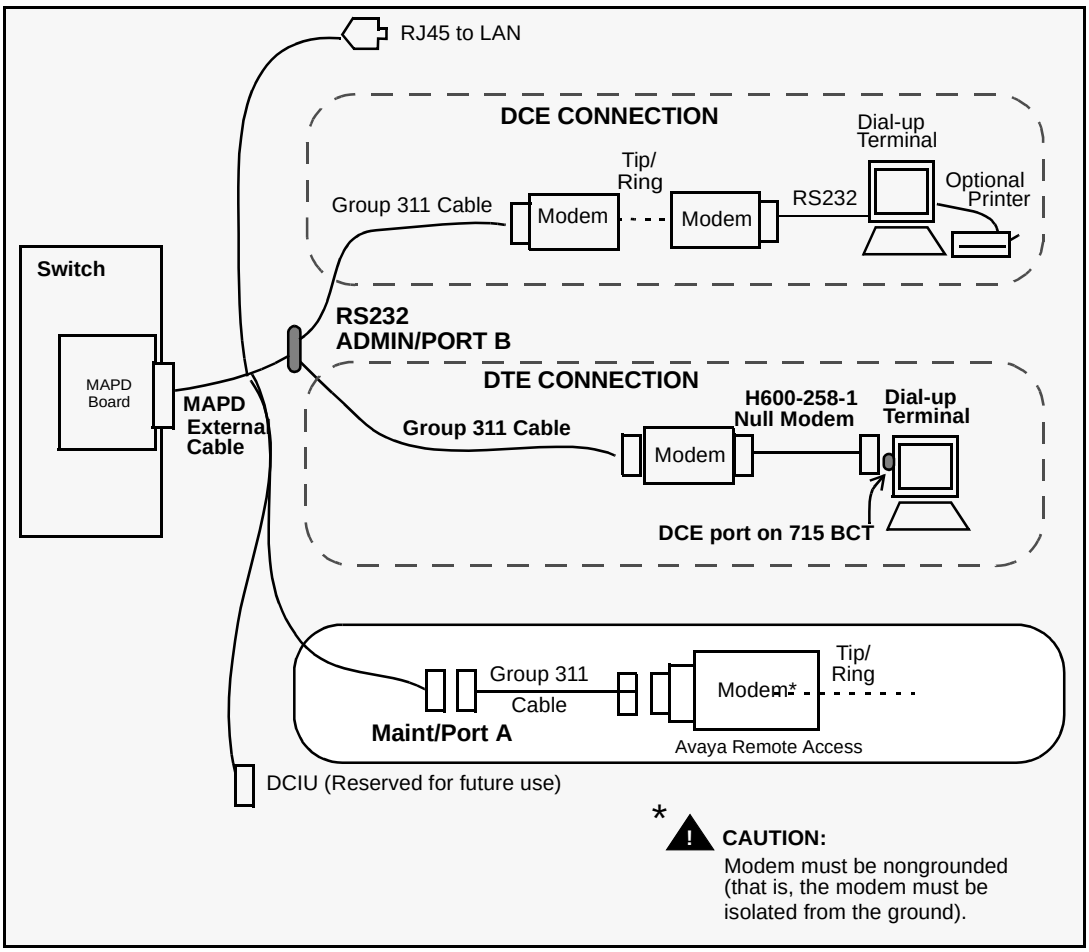

Figure 2-17. Connecting the Maintenance Modem

1. Physically connect one end of the cable to the modem and the other end to the MAPD maintenance port (Maint/Port A).
2. Set the modem options as per "Modem Option Settings" in Appendix B, and if necessary, connect the modem to a phone jack and power on.

3. Use the Steps in "Installation: Task 4c — Install a Terminal Using Modem Connections" in this chapter to establish communication with the modem connected to Maint/Port A.

   g. Attach one end of an RS-232 cable to a serial RS-232 port on the terminal (the DTE port on a 715 BCT), and attach the other end to the modem (if it is not already connected).

      NOTE:
      If you connect the modem to the DCE port on a 715 BCT, you must also connect a null modem cable between the modem and the 715 BCT.

   h. Attach the connector on one end of a modular cord to the modem, and attach the other end to a telephone outlet.

4. Plug the modem power cord into a wall outlet.

5. After you have connected to the modem, record the telephone number. You will call the TSC and give them the telephone number of the modem in a later procedure.

Installation: Task 6 — Finalize and Test the Hardware

This task is required for all installation scenarios to verify that the MAPD system hardware and software components are installed properly.

1. At the DEFINITY G3-MT, enter `list configuration board <loc>.`

   The DEFINITY system displays the System Configuration Screen with columns (fields) for Board Number, Board Type, Code, and so on.

2. From the System Configuration screen, check under `Board Type for` **`MAPD BOARD`**; under `Code` you should see **`TN801B`** (which corresponds to the MAPD board entry).

3. At the front panel of the MAPD circuit pack, verify that the LCD displays ASAI along with the number of established links. For example **`ASAI 8`**. This confirms that the MAPD system is in the ASAI state with 8 links.

4. From the MAPD terminal verify that the terminal and modems (if applicable) are connected and set up correctly.

5. At the login prompt, type `craft` and press **Return**. (If the login prompt is not displayed, press **Return** once or twice.)

   NOTE:
   To send the information to the MAPD system, press **Return** (located on the right side of your keyboard) after you type a command, or a response to a prompt. On some keyboards, this key is labeled **Enter** instead of **Return** If your keyboard has both **Return** and **Enter** (as on the 513 and 615 keyboards), use **Return**.

   System response: **`Password`**

6. Enter the default password for the craft login.

   System response: **`Terminal Type (513, 715, 4410, 4425,vt100, vt220,...): [xterm]`**

7. Enter one of the following:

   - `513` for a 513 BCT or 715 BCT; enter `513` also for a 610/615 BCT or a PC with a 513 emulation package. (Since 513 is the default, just press **Return** to select it.)
   - `4410` for a 4410 or 5410 terminal; enter `4410` also for a 610/615 BCT or a PC with a 4410 emulation package.
   - `4425` for a 4425 or 5425 terminal
   - `5420` for a 5420 or 4415 terminal
   - `g3-ma` for a G3-MA terminal
   - `vt220` (or other terminal listed in Appendix B, "Worksheet B-1: Terminals/Modems")

If the terminal and modems (if applicable) are connected properly and the options are set correctly, the system responds with the MAPD Main Menu.

8. Place the label containing the MAPD system shutdown warning next to the cabinet power switch.
9. Place the maintenance log label near the system assembly.

NOTE:
Labels are supplied with the MAPD system hardware.

Setting up the MAPD Configuration

3

Setting up the MAPD in a CTI Configuration

Introduction

With this chapter, the emphasis shifts from installation to administration. In Chapter 3 the primary objective is to establish communications between the switching domain (the DEFINITY system) and the computing domain, up to the network boundary.

Who Should Use this Chapter

Establishing connectivity is a cooperative effort between Avaya and the customer. Some of the tasks, such as switch administration and testing client connectivity to the switch are geared toward customers. Other tasks, such as administering the MAPD are geared toward Avaya service technicians.

Related Documents

This chapter assumes that ASAI is enabled on the DEFINITY system Customer Options Form for the system.

In this Chapter

The following table describes the initial administration tasks necessary for establishing communications between the switching domain and the computing domain. Notice that tasks are labeled in terms of audience, based on who is responsible for carrying out the tasks (Avaya, Customer, or all for both Avaya and the Customer).

NOTE:
Use this topic table as a checklist for carrying out the tasks described in Chapter 3. Please read through all of Chapter 3 before attempting to perform any of the tasks.

Topic	Audience
"Task 1: DEFINITY Administration"	All
"Task 1: DEFINITY Administration"	Customer
"MAPD Administration"	Avaya
"Task 1: Basic Administration — Logging in to the MAPD System"	Customer
"MAPD Task 1: Setting the MAPD Clock"	Avaya
"MAPD Task 2: Assigning the MAPD Machine ID (Optional)"	Avaya
"MAPD Task 3: Rebooting the MAPD"	Avaya
"MAPD Task 4: Testing MAPD/LAN Connectivity (Optional)"	All
"Task 5: Pinging the MAPD — Customer"	Customer
"Task 5A, Alternative Procedures"	Avaya
"MAPD Task 5: Registering the System"	Avaya
"Task 6: Deactivating and Activating Logins"	All
"Task 7: Performing a Backup of the Removable Medium"	All

Task 1: DEFINITY Administration

Task 1 is performed by the customer from the DEFINITY System Administration Terminal (SAT). The objective of this task is to make sure the MAPD is set up correctly in the switch and to administer a link.

NOTE:
Whenever you change the System-Parameters Customer-Options Form, you must log out for the changes to take effect.

Procedure to Configure MAPD in the Switch and Establish a Link

Step 1 of this procedure recommends using the **change circuit packs command** instead of the **display circuit packs command**. By using the **change** form of the command, you can effect changes if they are necessary

1. Log in to the DEFINITY system.
1. Type **`change circuit packs`**.

   The system displays a CARRIER screen similar to Screen 2-1.

```
change circuit-packs 1                                    Page 1 of 5

----------------------------------------------------------------------


                                 CARRIER 1A

 Slot Code   Sfx   Name                    Slot Code     Sfx     Name
  01: ______  ____                          11: ______    ____
  02: ______  ____                          12: ______    ____
  03: ______  ____                          13: ______    ____
  04: ASAIM1  ____RESERVED-LANGATE          14: ______    ____
  05: ASAIM1  ____RESERVED-LANGATE          15: ______    ____
  06: TN801   __B__ MAPD BOARD              16: ______    ____
  07: ______  ____
  08: ______  ____
  09: ______  ____
  10: ______  ____
  '#' indicates circuit pack conflict
```

The entry for the MAPD indicates that the system fully recognizes the board (no conflicts exist).

Screen 3-1. Change Circuit-Packs, Carrier Screen

2. Check the CARRIER screen to see if the MAPD is fully recognized by the system. To do this, locate the entry for the MAPD and make sure that there are no circuit pack conflicts (denoted by a #).

   For example in Screen 3-1, the following entry `06: TN801 B MAPD BOARD` indicates that no circuit pack conflict exists, and the MAPD is fully recognized by the system.

   - If you discover a conflict, for example

     06: TN801 B MAPD BOARD #

     Determine where the MAPD is physically installed in the switch (in terms of carrier, cabinet and slot), and make the appropriate changes on the CARRIER screen. Recall that you will have to log out for the changes to take effect.

3. Type **`list config all`** to determine what ports are available on the MAPD for adding a station.

   The system displays the SYSTEM CONFIGURATION screen, similar to the example in Screen 3-2. Notice that to the right of the listing for the MAPD (1A 06 MAPD BOARD TN801B 000001) are u entries (under Assigned Ports) that indicate unused ports for you to administer

```
list configuration all                          There are twelve unassisgned
                                                or available ports on the MAPD
Page 1                                          Each u represents an available
                                                port.

----------------------------------------------------------------------
                            SYSTEM CONFIGURATION

Board
Number      Board Type      Code      Vintage                Assigned Ports
1A01    EXPANSION INTF     TN776      000001
1A02    EXPANSION INTF     TN776      000001
1A03
1A04    RESERVED LGATE     TN801      MAPD            u  u  u u  u u  u u
1A05    RESERVED LGATE     TN801      MAPD            u  u  u u  u u  u u
1A06    MAPD BOARD        TN801B      000001          u  u  u u  u u  u u
                                                      u  u  u u  u u  u u
                                                      u  u  u u  u u  u u
The MAPD logically occupies three
slots on a port carrier.
```

Screen 3-2. List Configuration, SYSTEM CONFIGURATION

4. Under Assigned ports, overwrite each u with a two digit port number for each port that you want to assign on the MAPD. For example overwrite the first u with **01**.

   With this step you are essentially completing the final attribute of a port address, which consists of four attributes (cabinet, carrier, slot and port). In this example, the complete port address is **1A0601**

5. Type **add station**.

   The system displays a STATION screen similar to Screen 3-3.

```
add station 1008                                          Page  1 of  2   SPE A
-------------------------------------------------------------------------------
                                  STATION


Extension: 1008
     Type: ASAI____                                                    TN: 1__
     Port: 1A0601__                                                   COR: 1_
     Name: ____________________                                       COS: 1_
                                       Hunt-to Station: _____

STATION OPTIONS




BRI OPTIONS
              XID? n     Fixed TEI? y  TEI: 1_
      MIM Support? n
                        CRV Length: 2

-------------------------------------------------------------------------------
```

Screen 3-3. Add Station, STATION Screen, Page 1 of 2

6. Follow Steps a through i to add an ASAI-enabled station. Completing the STATION screen administers an adjunct IP link between DEFINITY and the customer's network server.

   a. In the `Extension:` field, type any valid extension on the dial plan. For example, **1008**.

   b. In the `Type:` field, type **ASAI** (Keep in mind that ASAI must also be administered on the individual LAN Gate ports on the MAPD.)

   c. In the `Port:` field, type the complete port address, for example **1A0601** (refers to the ports you assign on the MAPD).

   d. In the `Name:` field, type the name of the customer' network server.

   e. In the `XID:` field, type **n**

   f. In the `Fixed TEI:` field, type **y**

g. In the `MIM Support:` field, type **n**

h. In the `CRV Length:` field, type **2**

i. In the `Event Minimization:` field accept the default value **n**

For all other fields, accept the default values (some fields may be on page 2 of the STATION screen).

MAPD Administration

MAPD administration tasks are performed by Avaya. The objective of these tasks is to establish connectivity to the customer's network, and, ultimately, to register the customer's system with Avaya Technical Support Center (TSC). Other pre-administration tasks (logging in) and post-administration tasks (backing up the system), are covered in this section also.

- MAPD Task 1: Setting the MAPD Clock (mandatory for all installations)
- MAPD Task 2: Assigning the MAPD Machine ID (optional)
- MAPD Task 3: Rebooting the MAPD
- MAPD Task 4: Testing MAPD/LAN connectivity (optional)
- MAPD Task 5: Registering and Backing up the system

Task 1: Basic Administration — Logging in to the MAPD System

All of the MAPD administrative tasks (Task 1 through Task 7) require you to log in to the MAPD system from the MAPD administrative terminal (which can be either a remote terminal or a terminal located in the switch room).

This task is an orientation task. The objective of this task is to log in to the MAPD system and get to the Main Menu. Before you start the procedure to log in, refer to Appendix B for terminal and modem settings. You will need this information to complete Step 3.

Procedure to Log in

Follow these steps to get to log in to the MAPD and get to the Main Menu.

NOTE:
To avoid reprinting Steps 1 through 5 of this procedure for Tasks 1 through 5, the procedures for Tasks 1 through 5 assume that you are logged in to the MAPD system and are starting at the Main Menu.

1. At the login prompt, enter `craft`

   System response: **`Password`**

2. Enter the default password for the craft login.

   System response: **`Terminal Type (513, 715, 4410, 4425,vt100, vt220,...): [xterm]`**

3. Enter one of the following:

   - `513` for a 513 BCT or 715 BCT; enter `513` also for a 610/615 BCT or a PC with a 513 emulation package. (Since 513 is the default, you can just press **RETURN** to select it.)
   - `4410` for a 4410 or 5410 terminal; enter `4410` also for a 610/615 BCT or a PC with a 4410 emulation package.
   - `4425` for a 4425 or 5425 terminal
   - `5420` for a 5420 or 4415 terminal
   - `g3-ma` for a G3-MA
   - `vt220` (or other terminal listed in Appendix B, "Terminal and Modem Option Settings.")

4. The system displays the Main Menu.

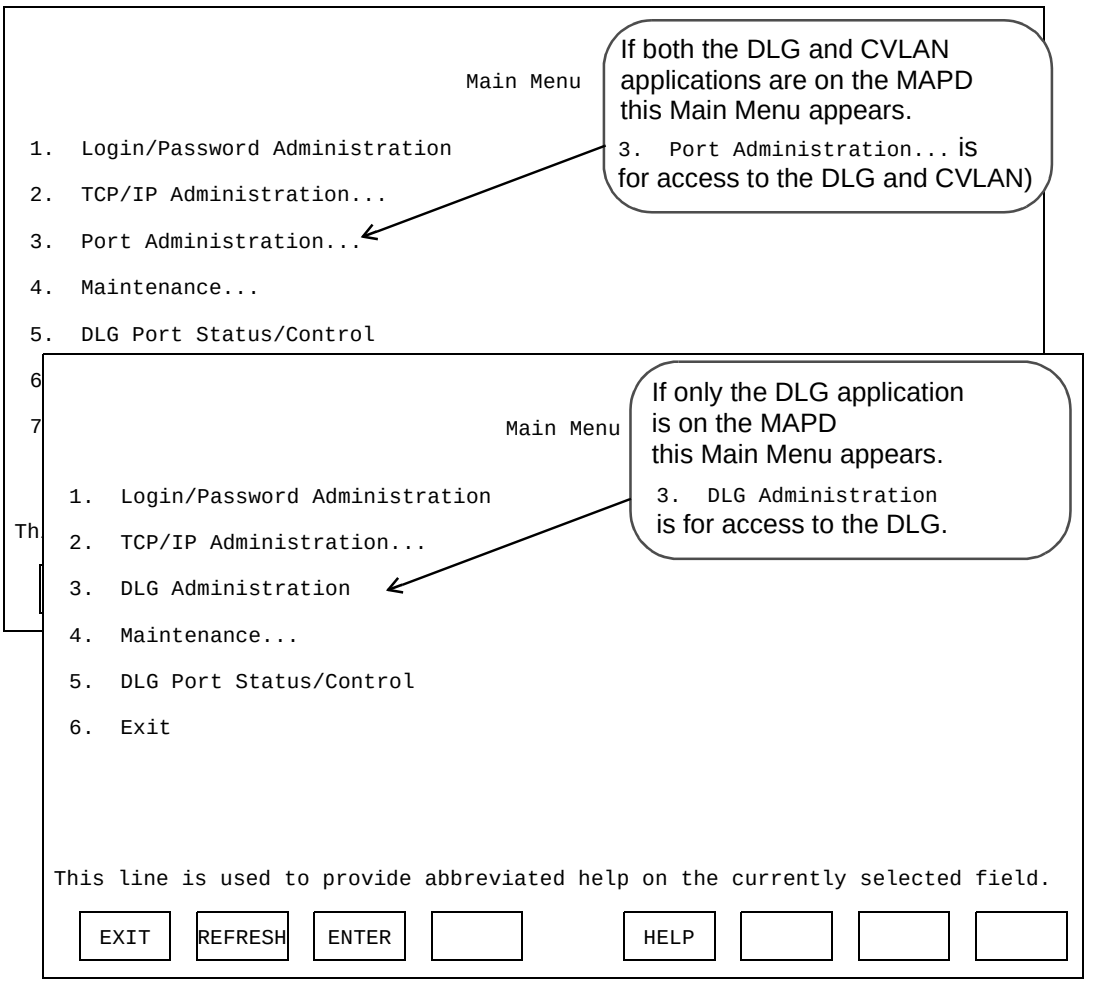

Screen 3-4. MAPD Main Menu (DLG and CV/LAN)

MAPD Task 1: Setting the MAPD Clock

The objective of this task is set the MAPD system time, date and time zone. For a complete description of the Set System Time and Date screen see "Set System Time and Date" on page 4-49.

Procedure to Set the MAPD Clock

This procedure assumes that you have logged into the MAPD system and are at the Main Menu (see "Task 1: Basic Administration — Logging in to the MAPD System" on page 3-6.)

Follow these steps to set the MAPD clock.

1. From the Main Menu, select **`4. Maintenance`**

   The System displays the Maintenance Menu.

2. From the Maintenance Menu, select **`2. Set System Time and Date`**.

   The system displays the Maintenance, Set System Time and Date screen.

```
                                Maintenance
                        Set System Time and Date


            Time: __:__              Month: __      Day: __      Year: ____

                        Standard Timezone Information
                          ST Name:          __________
                          Offset Time:      __:__
                          Direction (E/W): _

                        Daylight Savings Timezone Information
                          DST Name:        ___________




This line is used to provide abbreviated help on the currently selected field.

  CANCEL   REFRESH   ENTER   CLEAR          HELP
```

Screen 3-5. MAPD Maintenance, Set System Time and Date

3. In the `Time:` field, enter the time of day in hours and minutes (hh:mm), based on a 24-hour clock. For example, **`14:00`** (for 2:00 p.m.).

4. In the `Month:` field, enter a two-digit month identifier. For example **`04`** (for April).
5. In the `Day:` field, enter a two-digit identifier for the day of the week. For example **`05`** (for Friday).
6. In the `Year:` field enter the four-digit calendar year. For example, **`2002`**.
7. In the ST Name field, enter the name or abbreviation of the standard time zone for your location. For example, **`Pacific`**.
8. In the Offset Time field, enter four digit value for the number of hours that vary from Universal Time (also known as Greenwich Mean Time). For example, if you select Pacific for your time zone, the offset time is **`08:00`**.
9. In the `Direction E/W:` field enter either E or W. This field refers to the direction your location is from the Universal Time zone (If you enter Pacific in Step 6, you would enter **`W`** for offset.
10. (This step is optional) In the DST Name: field, enter the name of the time zone you specified in Step 7 (for example, **`Pacific`**). Keep in mind that when you specify a time zone in the DST Name field, you are setting an alternate time zone that follows U.S. Daylight Savings rules.
11. Press **ENTER** when you have completed the fields for the “Maintenance, Set System Time and Date” screen.

    The system returns you to the Maintenance Screen.
12. Press **CTRL-F 1** (EXIT) to return to the Main Menu.

MAPD Task 2: Assigning the MAPD Machine ID (Optional)

The objective of this task is to identify the MAPD (so the customer LAN can recognize it). This task is necessary only if the customer is attaching the MAPD system to an existing TCP/IP LAN.

NOTE:
Avaya support services for the MAPD system will not troubleshoot a customer LAN. If the customer LAN is experiencing difficulties, customers should follow the escalation path supplied by their LAN provider.

Procedure for Assigning the MAPD Machine ID

This procedure assumes that you have logged into the MAPD system and are at the Main Menu (see "Task 1: Basic Administration — Logging in to the MAPD System" on page 3-6.)

Follow these steps to assign the MAPD machine id.

1. From the MAPD Main Menu Select `TCP/IP Administration.`

   The system displays the TCP/IP Administration Screen.

2. Select `This Host`.

   The system displays The TCP/IP Administration, This Host screen.

```
                    TCP/IP Administration
                          This Host

          Host Name:        ______________________________

          Host IP Address:  __________________

          Subnet Mask:      __________________




This line is used to provide abbreviated help on the currently selected field.

 CANCEL   REFRESH   ENTER   CLEAR        HELP
```

Screen 3-6. MAPD TCP/IP Administration, This Host

3. If a different host name from the default (definity) is desired, in the `Host Name:` field, type the new name to be assigned to this MAPD system. The machine name must be from 1 to 20 characters in length.
4. If an IP address other than the default (192.168.25.10) is desired, type the new IP address in the `Host IP Address` field.
5. If a subnet mask is desired, type the subnet mask name in the `Subnet Mask` field.
6. Press **ENTER** to save the changes.
7. Press **CTRL-F 1** (EXIT) until you reach the Main Menu.

MAPD Task 3: Rebooting the MAPD

The objective of this task is to restart the MAPD operating system.

Procedure for Rebooting the MAPD

This procedure assumes that you have logged into the MAPD system and are at the Main Menu (see "Task 1: Basic Administration — Logging in to the MAPD System" on page 3-6.)

Follow these steps to reboot the MAPD system.

1. From the Main Menu select **`4. Maintenance`**.

   The system displays the Maintenance menu.
2. From the Maintenance Menu, select, **`3. Reset System`**.

   The system displays the Maintenance, Reset System menu.
3. From the Maintenance, Reset System menu, select **`2. Reboot System`**.

   The system displays messages during the reboot.

- If you reboot from the system console, the login prompt will appear when the procedure is complete.
- If you reboot from a remote connection, you have to reconnect later (approximately 5 to 10 minutes).

MAPD Task 4: Testing MAPD/LAN Connectivity (Optional)

Task 4 is a cooperative task between Avaya and the customer. The objective of this task is to ensure that connectivity exists between the MAPD and the customer's network.

Make sure you are familiar with the configuration you are testing. For more information, see Appendix E, "Sample Customer Configurations."

NOTE:
Connectivity to the MAPD system from a subscriber PC is not part of the acceptance testing for this feature. Customers are responsible for verifying that their LAN is communicating with the subscriber PCs.

Task 5: Pinging the MAPD — Customer

The objective of this task is to determine if the MAPD's IP address is recognized by the customer's network. **The customer's LAN administrator performs this task.**

Procedure to Ping the MAPD — Customer

From the LAN administration terminal, perform a standard LAN ping test into the MAPD based on the addressing information used in "MAPD Task 2: Assigning the MAPD Machine ID (Optional)".

The following example depicts pinging the MAPD with the default IP address. If you administered your MAPD IP address for a private LAN, that is you changed the default, use that IP address instead of the default.

`ping -n20 -l64 192.168.25.10` (default IP address)

Task 5A, Alternative Procedures

Task 5, Alternative Procedures provides two tasks to carry out only if the customer is not available for acceptance testing.

- "Task 5A1, Alternative Procedure to Ping the MAPD Itself — If Customer Is Unavailable"
- "Task 5A2, Alternative Procedure — Pinging the Customer's Network Server — If Customer is Unavailable"

Task 5A1, Alternative Procedure to Ping the MAPD Itself — If Customer Is Unavailable

NOTE:
This test is internal to the MAPD system, and does not access the customer's LAN. The MAPD is pinging itself.

1. From the MAPD Main Menu, Select 4. `Maintenance`
2. The system displays the Maintenance Menu.
3. Select **`6. Diagnostics`**
4. The system displays the Maintenance, Diagnostics screen.
5. Select **`1. Ping Host`**
6. The system displays the Maintenance Diagnostics, Ping Host screen.

```
                                Maintenance
                                Diagnostics
                                 Ping Host


                  Host Name or IP Address: ____________________
                  Packet count:            ___
                  Packet size:             ___


This line is used to provide abbreviated help on the currently selected field.

 CANCEL  REFRESH  ENTER  CLEAR        HELP
```

Screen 3-7. MAPD, Maintenance Diagnostics, Ping Host

7. In the `Host Name or IP address` field type the host name or IP address of the MAPD. For example, **`192.168.25.10`**
8. In the `Packet Count` field, type **`20`** (recommended),
9. In the `Packet size` field, type **`64`** (recommended).
10. Press **Enter** to complete the Ping Host screen.

The MAPD sends 20 packet messages to itself, listens for responses, and issues a series of messages similar to the following.

```
The messages which follow are the result of your last request.
At the <EOF> : prompt press return to continue.

64 bytes from 192.168.25.10: icmp_seq*0,  time=0. xx
64 bytes from 192.168.25.10: icmp_seq*1,  time=0. xx
64 bytes from 192.168.25.10: icmp_seq*2,  time=0. xx
64 bytes from 192.168.25.10: icmp_seq*3,  time=0. xx
64 bytes from 192.168.25.10: icmp_seq*4,  time=0. xx
64 bytes from 192.168.25.10: icmp_seq*5,  time=0. xx
64 bytes from 192.168.25.10: icmp_seq*6,  time=0. xx
64 bytes from 192.168.25.10: icmp_seq*7,  time=0. xx
64 bytes from 192.168.25.10: icmp_seq*8,  time=0. xx
64 bytes from 192.168.25.10: icmp_seq*9,  time=0. xx

----192.168.25.10 PING statistics----
20 packets submitted, 20 packets received. 0 percent packet loss
round-trip (ms) min/avg/max =x/x/x
<EOF>:
```

Screen 3-8. Results of Pinging the MAPD

11. Based on the "Guidelines for Evaluating an Internal MAPD Ping", examine the test results that are displayed at the bottom of the screen. For example.

```
----(address) PING statistics----

x packets submitted, y packets received. z percent
packet loss
round-trip (ms) min/avg/max =aa/bb/cc
```

Guidelines for Evaluating an Internal MAPD Ping

The results displayed in the packet loss field (z) will be either 0 percent or 100 percent. Recall that this test is internal to the MAPD system, and does not access the customer's LAN.

- If the test reports 0 percent packet loss, the test was successful. Continue with the next step in this procedure.
- If the test reports 100 percent packet loss, the test failed. If it failed, verify that you did use the correct address for the MAPD system assembly. If you did, then contact your remote maintenance center. After the problem has been resolved, repeat the test and then continue with the following steps.

Task 5A2, Alternative Procedure — Pinging the Customer's Network Server — If Customer is Unavailable

Follow these steps to ping the customer's network server.

1. From the MAPD Main Menu, Select 4. `Maintenance`
2. The system displays the Maintenance Menu.
3. Select **`6.Diagnostics`**
4. The system displays the Maintenance, Diagnostics screen.
5. Select **`1. Ping Host`**
6. In the Host Name or IP address field type the host name or IP address of the CTI Server. For example, **`192.168.25.20`**

   (If you choose to enter IP Address instead of Name and if this is the IP address of the client).
7. In the Packet Count field, type **`20`** (recommended).
8. In the Packet size field, type **`64`** (recommended).
9. Press **Enter** to complete the Ping Host screen.

The MAPD system sends packet messages (20 in this example) to the client, and listens for responses.It displays messages similar to the following.

```
The messages which follow are the result of your last request.
At the <EOF> : prompt press return to continue.

64 bytes from 192.168.25.20: icmp_seq*0,  time=0. xx
64 bytes from 192.168.25.20: icmp_seq*1,  time=0. xx
64 bytes from 192.168.25.20: icmp_seq*2,  time=0. xx
64 bytes from 192.168.25.20: icmp_seq*3,  time=0. xx
64 bytes from 192.168.25.20: icmp_seq*4,  time=0. xx
64 bytes from 192.168.25.20: icmp_seq*5,  time=0. xx
64 bytes from 192.168.25.20: icmp_seq*6,  time=0. xx
64 bytes from 192.168.25.20: icmp_seq*7,  time=0. xx
64 bytes from 192.168.25.20: icmp_seq*8,  time=0. xx
64 bytes from 192.168.25.10: icmp_seq*9,  time=0. xx

----192.168.25.20 PING statistics----
20 packets submitted, 20 packets received. 0 percent packet loss
round-trip (ms) min/avg/max =0/0/0
<EOF>:
```

Screen 3-9. Results of Pinging the Client

10. Read the next section "Guidelines for Evaluating a Client Network Ping" and examine the test results that are displayed at the bottom of the screen. For example.

    ```
    ----(address) PING statistics----
    ```

    ```
    x packets submitted, y packets received. z percent
    packet loss
    ```

    ```
    round-trip (ms) min/avg/max =aa/bb/cc
    ```

Guidelines for Evaluating a Client Network Ping

The results displayed in the packet loss field (z) will range from 0 percent to 100 percent. The number of packets that are “lost” (need to be retransmitted), will vary from LAN to LAN. For some LANs, 0 percent packet loss is normal, while for others, 10 percent or 20 percent loss is normal. The degree of packet transmission over a LAN depends upon the distance between machines, the number of users on the LAN, and the number of machines on the LAN.

If You Observe 0 to 49 Percent Loss

Consider this test successful if the MAPD system reports a packet loss percentage in the range from 0 to 49 percent. Contact the customer LAN or system administrator, however, if the packet loss is from 10 to 49 percent. The customer administrator should be advised that the send and receive packets test (PING test) showed the loss. A loss in this range may cause the MAPD system to experience slow response time. Possible causes for this type of loss include network congestion, or a faulty device on the network.

If You Observe Packets out-of-sequence

For a successful test (0 to 49 percent), also examine the `icmp_seq = field`. If one or two of the packets appear out of sequence, then the condition is acceptable. If, however, more than two packets are out of sequence (for example, 0, 2, 5, 3, 1...), then inform the customer administrator. Out-of-sequence packets may indicate network congestion or misrouting.

If You Observe 50 to 99 Percent Loss

Consider this test a failure if the packet loss value is in the range of 50 to 99 percent. In this range, the MAPD will be extremely slow, or will completely fail to communicate even though it has made a connection to the LAN. If you have a system that is reporting a 50 percent to 99 percent packet loss, cancel and refer to the troubleshooting procedure for a TCP/IP connection in Appendix D, “Troubleshooting Procedure.”

If this test has completely failed and the system reports a 100 percent packet loss, verify that you used the correct address. The test does not report if the test failure is due to sending the packets to an incorrect or nonexistent machine. A 100 percent packet loss indicates that the MAPD system has not established communication over the LAN to the test machine address.

If you entered the right address, cancel and refer to the troubleshooting procedure for a TCP/IP connection in Appendix D, “Troubleshooting Procedure.”

MAPD Task 5: Registering the System

Avaya services registers the MAPD system by calling the TSC at 1 800 248-1111.

Be prepared to provide the TSC with the following information

- the remote access port number
- customer name
- installation location
- order number

NOTE:
Registration needs to be done only once for the MAPD system for tasks 6 and 7.

Task 6: Deactivating and Activating Logins

Task 6 is a cooperative task between Avaya and the Customer. The customer must be present for the customer login activation. If the customer cannot be present, the service technician should leave a message for the customer to contact the Avaya TSC at: 1 800 248-1111

- "MAPD Task 5: Registering the System" is a prerequisite to Task 6.

Procedure for Deactivating and Activating Logins

1. Avaya service technician logs out of the system.
2. Customer contacts the Avaya TSC to activate customer login.

   NOTE:
   At this point the Avaya craft login becomes inactive. Reestablishment of the services login requires coordination with the TSC through the TSC dispatch process.

3. Avaya TSC activates login.
4. Customer is required to enter a password the first time he or she logs in. **Avaya Services will have no knowledge of this password.**

Customers should see the screen "Change Passwords" in Chapter 4, ‘‘CVLAN and DLG System Administration’’ to change accessible passwords.

Task 7: Performing a Backup of the Removable Medium

The Removable medium refers to the SanDisk PCMCIA FlashDisk, which is part of the MAPD system order. (See Appendix C, “Ordering Information.”)

The SanDisk PCMCIA FlashDisk should already have been inserted as described in Step 3 of "Installation: Task 3 — Installing the MAPD Assembly in the Switch" (Chapter 2).

1. At the front panel of the MAPD, make sure the SanDisk PCMCIA FlashDisk is inserted in the slot for the PCMCIA disk.
2. The Avaya service technician assists the TSC in performing a backup of the system.

NOTE:
Recall that the craft login has been deactivated at this point.

3. The TSC accesses the screen, “Removable Media Operations” in Chapter 3, and performs `Save Configuration Data to Removable Media.`
4. When the backup has completed, the field technician labels and dates this disk as the backup disk.

CVLAN and DLG System Administration

4

This chapter presents the screens used to administer and maintain the system. Sample configurations are located in Appendix E, “Sample Customer Configurations.”

Getting Started

This section provides detailed information about the screens, procedures for logging on, and procedures for moving among screens.

Screen/System Conventions

The screen and system conventions are listed below.

NOTE:
The top right corner of all the screens is reserved for a “***HARDWARE ALARMS***” message. If this message is displayed on any screen, contact the TSC.[1]

- Not all the function keys apply to all the screens.
- Information in read-only fields is static. It reflects conditions present at the time the screen is displayed, and is not updated in real-time as conditions change.
- A selected field is the one where the cursor currently resides.

1. All the alarms associated with the MAPD system are not automatically transmitted to TSC.

- If you make a mistake while typing data on a line, backspace and overwrite the characters or use [CLEAR] to clear the field. If you have already passed the line that has the mistake, use [TAB] or the arrow keys to return to the field, and type over the characters.
- Menu items followed by three dots (...) have submenus.
- When data is added on a screen, after you press [ENTER], the previous screen reappears with the cursor positioned at the beginning of the new entry. (The new data is in alphabetical or numerical sequence, depending on how the data is organized for that screen.)
- When the prompt: **`Are you sure?`** appears, the user must press [RETURN] after entering `Y` or `N`.
- In this document DLG stands for the DEFINITY LAN Gateway application and CV/LAN stands for the CallVisor ASAI PC LAN application.

Logging On

1. At the login prompt, enter your login and press [RETURN].

   The password prompt (**`PASSWORD:`**) appears.

   NOTE:
   If a login prompt is not displayed, press [RETURN] a few times. If it still does not appear, see “Bringing Up the MAPD System, in Appendix D.

2. Enter your password and press [RETURN]. You are prompted for your terminal type as follows:

   `Terminal Type (513, 715, 4410, 4425,vt100, vt220,...): [xterm]`

   The default is 513.

3. Enter your terminal type and press [RETURN]

   The Main Menu appears. For information about this menu, see the section, "Field Names and Descriptions" in this chapter.

Moving Around the System

The methods for moving around the screens on the MAPD are as follows:

1. You can use the **function keys** on the bottom of the screen NXTPG, PRVPG, NXTDAY, and PRVDAY to move around screens, as applicable.

   NOTE:
   An alternate method of using function keys is to press the CTRL key, and while holding it down, press F. Then release both keys and press the number corresponding to the function key. For example, function key 3 is EXIT.You may press CTRL F 3 instead, in the manner just explained.

   This method is helpful if the keyboard does not properly send or have function keys and works for any terminal type.

   See Table 4-1, "Using the Function Keys" for an explanation of the function keys.

2. You can press the TAB key to move among fields.
3. You can use the **arrow keys** on your keyboard to move up, down, left, or right on the screen.
4. On **menu screens**, you can place the cursor on the number to the left of a menu item on a menu screen and press the ENTER function key. This displays the first screen pertaining to that item.

   Alternatively, you can type the number of your selection and this selects the menu

Using the Function Keys

Table 4-1. Function Keys

Pressing this key	Does This
ACTION	Toggles to activate or deactivate CV/LAN ISDN alarm.
ADD	Accesses new screen for adding data.
APPL	Appears on Application Port Assignment screen. Toggles port assignment between DLG and CV/LAN applications.
ASSIGN	Assigns port numbers to node IDs for CV/LAN.
CANCEL	Aborts operation and returns you to previous menu or screen.
CHGPW	Appears on the Login/Password Administration screen. Displays the screen for changing passwords.
CLEAR	Clears the field the cursor is located on.
CLIENT	Displays a list of clients associated with a node ID.
DELETE	Deletes data the cursor is on (either an item or a line depending on the screen). Prompts: **`Are you sure? (Y/N)`** before deleting data.
DROP	Drops connections to clients.
ENTER	On menu screens, executes the selected action. On other screens, enters updates or additions typed and returns you to previous screen.
EXIT	On menu screens, redisplays previous screen. Returns you to login prompt from Main Menu.
HELP	Displays help screen for selected field. Then, when RETURN is pressed, redisplays screen from which help was requested.
MSGPER	On DLG and CV/LAN Port Status/Control screen, accesses Message Collection Period screen.
NXTDAY	Accesses next day's data. On the last day, wraps to first day.
NXTPG	Displays next page of a multi-page screen. On the last page, wraps to first page.
PORT	Accesses screen to associate a port to a node ID.
PRVDAY	Accesses previous day's data. On the first day, wraps to last day.

Continued on Next Page

Table 4-1. Function Keys — *Continued*

Pressing this key	Does This
PRVPG	Displays previous page of a multi-page screen. On the first page, wraps to last page.
REFRESH	Redraws the screen.
STATE	Alternates a field's value.
UPDATE	Updates the screen with current information.

NOTE:
Any key appearing on this table that is mentioned in this document should be considered a function key and not a regular key on the keyboard.

List of Screens (DLG and CV/LAN)

A list of the system administration screens appears below. This list shows the screen hierarchy and all the screens that will appear if both CV/LAN and DLG are installed.

Main Menu (DLG and CV/LAN) page 4-9

Login/Password Administration page 4-11

- Add Login page 4-13
- Change Passwords page 4-15

TCP/IP Administration page 4-17

- This Host page 4-18
- Local Host Table page 4-20
  - Add Host page 4-22
- Network Routing Information page 4-24
  - Network Routing Daemon page 4-25
  - Default Gateway page 4-26
  - Network Routing Table page 4-28
    - Add Routes page 4-30

Port Administration page 4-32

- Application Port Assignment page 4-33
- DLG Administration page 4-34
  - Add Client Link page 4-36
- CV/LAN Administration page 4-38

Clients for Node ID signalXX page 4-40

Add Client page 4-42

Assign Port for Node ID signalXX page 4-43

Maintenance (DLG and CV/LAN) page 4-45

Removable Media Operations page 4-47

Set System Time and Date page 4-49

Reset System (DLG and CV/LAN) page 4-53

System Logs page 4-55

Security Logs page 4-56

Login Attempt Log page 4-57

Client Access Logs page 4-58

System Reset Log page 4-59

Command Logs page 4-60

Diagnostics page 4-61

Ping Host page 4-62

Hardware Alarms page 4-63

Hardware Status page 4-64

Application Components page 4-65

CV/LAN Utilities page 4-66

ASAI Test page 4-67

ASAI Trace page 4-68

ISDN Trace page 4-69

ISDN Alarm page 4-69

DLG Port Status/Control page 4-71

Message Collection Period page 4-75

CV/LAN Port Status/Control page 4-77

Message Collection Period page 4-80

List of Screens (DLG)

A list of the system administration screens appears below. This list depicts the screen hierarchy and all the screens that will appear if only DLG is installed.

Main Menu (DLG) page 4-8

Login/Password Administration page 4-11

- Add Logins page 4-13
- Change Passwords page 4-15

TCP/IP Administration page 4-17

- This Host page 4-18
- Local Host Table page 4-20
  - Add Host page 4-22
- Network Routing Information page 4-24
  - Network Routing Daemon page 4-25
  - Default Gateway page 4-26
  - Network Routing Table page 4-28
    - Add Routes page 4-30

DLG Administration page 4-34

- Add Client Link page 4-36

Maintenance (DLG) page 4-44

- Removable Media Operations page 4-47
- Set System Time and Date page 4-49
- Reset System (DLG) page 4-52
- System Logs page 4-55
- Security Logs page 4-56
  - Login Attempt Log page 4-57
  - Client Access Logs page 4-58
  - System Reset Log page 4-59
  - Command Logs page 4-60
- Diagnostics page 4-61
  - Ping Host page 4-62
  - Hardware Alarms page 4-63
  - Hardware Status page 4-64
- Application Components page 4-65

DLG Port Status/Control page 4-71

- Message Collection Period page 4-75

Field Names and Descriptions

Main Menu (DLG)

```
                                Main Menu

 1.  Login/Password Administration

 2.  TCP/IP Administration...

 3.  DLG Administration

 4.  Maintenance...

 5.  DLG Port Status/Control

 6.  Exit



This line is used to provide abbreviated help on the currently selected field.

  EXIT   REFRESH   ENTER                    HELP
```

Screen 4-1. Main Menu (DLG)

Main Menu (DLG and CV/LAN)

```
                                Main Menu

 1.  Login/Password Administration

 2.  TCP/IP Administration...

 3.  Port Administration...

 4.  Maintenance...

 5.  DLG Port Status/Control

 6.  CV/LAN Port Status/Control

 7.  Exit


This line is used to provide abbreviated help on the currently selected field.

  EXIT   REFRESH   ENTER                    HELP
```

Screen 4-2. Main Menu (DLG and CV/LAN)

NOTE:
This screen will appear only if CV/LAN is also installed.

Menu Item	Description
Login/Password Administration	Allows administrators to add and delete user logins. Allows administrators and users to modify passwords.
TCP/IP Administration	Provides access to all administrable network data: network name, IP address of the MAPD board the user is accessing, all locally known hosts, and all network routing information.
Port Administration	Provides access to administration of virtual BRI ports. Only applies to Screen 4-2.
DLG Administration	Provides access to a screen for viewing, adding, and deleting DLG Clients. Only applies to Screen 3-1.
Maintenance	Provides access to maintenance functions: formatting media, saving and restoring configuration data, setting time and date, resetting the system, viewing system/security logs, and pinging other hosts.

Menu Item	Description
DLG Port Status/Control	Provides access to DLG port status and control data. Allows users to view status information and terminate client connections.
CV/LAN Port Status/Control	Provides access to CV/LAN port status and control data. Allows users to view status information and terminate client connections. Only applies to Screen 3-2.
Exit	Logs user out of the system.

To use this menu, select the number of the task you wish to perform. (Press the number, or press TAB or use the arrow keys to move the cursor to the desired number, and press ENTER.)

Login/Password Administration

NOTE:
Only the primary administrator using login = `asai_adm` is allowed to add or delete logins. (The ADD and DELETE keys only appear for the primary administrator login.) Also, only the `asai_adm` login can be used to change a password for any login.

```
                    Login/Password Administration

          Login                Login                Login
_______________      _______________      _______________
_______________      _______________      _______________
_______________      _______________      _______________
_______________      _______________      _______________
_______________      _______________      _______________
_______________      _______________      _______________
_______________      _______________      _______________
_______________      _______________      _______________
_______________      _______________      _______________
_______________      _______________      _______________
_______________      _______________      _______________
_______________      _______________      _______________
_______________      _______________      _______________
_______________      _______________      _______________
_______________      _______________      _______________
_______________      _______________      _______________

This line is used to provide abbreviated help on the currently selected field.

 CANCEL  REFRESH  ADD  DELETE        HELP  CHGPW
```

Screen 4-3. Login/Password Administration

This screen is used to view and delete logins. It also provides access to the **Add Logins** and **Change Passwords** screens. Logins are listed in alphabetical order. A maximum of 45 logins may be administered.

Field Name	Description
Login	Lists all administered logins. Maximum login length is 15 characters.

Use this screen as follows:

- To delete a login:
  1. Press TAB or use the arrow keys to move to the login you want to delete, and then press DELETE.
  2. The following prompt appears: **`Are you sure? (Y/N).`** Type Y and press RETURN. The screen reappears, minus the deleted login.

     If you type `N` and press RETURN the cursor reappears at the beginning of the line, and the login is not deleted.
  3. Repeat steps 1 and 2 until you have deleted all desired logins. Then press EXIT and the Main Menu reappears.
- To change a login's password, press CHGPW to access the screen for changing passwords.
- To add a login, press ADD to access the **Add Logins** screen.

Add Logins

NOTE:
Only the primary administrator using the `asai_adm` login is allowed to add logins and passwords.

NOTE:
If the primary administrator attempts to add a login that already exists, an error message is displayed.

```
                    Login/Password Administration
                              Add Logins



                         Login: _____________



This line is used to provide abbreviated help on the currently selected field.

  CANCEL   REFRESH   ENTER   CLEAR        HELP
```

Screen 4-4. Add Logins

When you add a login using this screen, after you press the ENTER function key the previous screen reappears with the cursor positioned at the beginning of the new entry.

Field Name	Description
Login	The login to be added. Maximum length is 15 characters.

Use this screen as follows:

1. Type the login you want to add to the system.
2. Press (ENTER) to submit the login.
3. The following prompt appears: **`New password:`**

   Type the password to be associated with the login and press (RETURN).

   Passwords follow normal UNIX® naming conventions. These are:

   - Each password must have at least 6 characters.
   - Each password must contain at least two alphabetic characters and at least 1 numeric or special character. “Alphabetic” includes all uppercase and lowercase letters.
   - Each password must differ from the user’s login name and any reverse or circular shift of that login name. (Corresponding uppercase and lowercase letters are considered equivalent.)
   - A new password must differ from the old one by at least three characters.

   NOTE:
   The `asai_adm` login that the primary administrator uses is not bound by these conventions when making up passwords.

4. The following prompt appears: **`Re-enter password:`**

   Re-enter the password at the prompt and press (RETURN) again. If you entered the password the same way both times, the password is added and the **Login/Password Administration** screen reappears. Repeat this procedure for each login and password you want to add.

Change Passwords

NOTE:
Any user may change his or her password. However, the primary administrator uses the `asai_adm` login to change any user's password.

```
Type Old Password
Type New Password
Re-Type New Password
```

Screen 4-5. Change Passwords

This screen is used to change user passwords. Passwords should be hard to guess and should not contain the following:

- all the same characters (for example, 1111, xxxx)
- sequential characters (for example, 1234, abcd)
- character strings that can be associated with you or your business, such as your name, birthday, business name, phone number, or social security number
- actual words and commonly-used names

Passwords should use as great a variety of characters as possible. For example, if both numbers and letters are permitted, the password should contain both. Passwords should be changed regularly, at least on a quarterly basis. Recycling old passwords is not recommended.

Field Name	Description
Old Password	The existing password. It appears on the screen only for logins other than the primary administrator.
New Password	The password you want to change the existing password to.

Use this screen as follows:

1. Logins other than the primary administrator:

   Type the old password and press RETURN. If you entered it correctly, the following prompt appears: **`New Password`**

2. All logins:

   Type the new password and press RETURN.

   The following prompt appears: **`Re-Type New Password`**

3. Re-type the new password and press RETURN**.**

   If you entered the new password the same way both times, the password is changed. The screen you were on previously (**`Login/Password Administration`**) reappears.

TCP/IP Administration

```
                          TCP/IP Administration

1. This Host
2. Local Host Table
3. Network Routing Information...
4. Exit









This line is used to provide abbreviated help on the currently selected field.
  EXIT   REFRESH   ENTER                    HELP
```

Screen 4-6. TCP/IP Administration

Menu Item	Description
This Host	Provides access to data identifying this circuit pack on the network, including machine's host name, IP address, and subnet mask.
Local Host Table	Provides access to screens for viewing, adding, or deleting all **locally** known client hosts.
Network Routing Information...	Provides access to Network Routing Information, including state of the network routing daemon, default gateway data, and other network routes. Accesses screens for viewing, deleting, or adding information.
Exit	Returns you to previous menu.

To use this menu, select the number of the task you wish to perform. (Press the number, or press TAB or use the arrow keys to move the cursor to the desired number, and press ENTER.)

This Host

```
                    TCP/IP Administration
                          This Host

          Host Name:        ______________________________

          Host IP Address:  __________________

          Subnet Mask:      __________________



This line is used to provide abbreviated help on the currently selected field.

 CANCEL   REFRESH   ENTER   CLEAR        HELP
```

Screen 4-7. This Host

This screen is used to assign a host name to the MAPD Board. The name must be unique in the domain to which the board is attached.

NOTE:
For changes to be implemented, you must reboot the system. See the Screens 4-25, "Reset System (DLG)" and "Reset System (DLG and CV/LAN)" in this chapter.

Field Name	Field Description	R[1]
Host Name	Host name of this circuit pack. **Default = definity.** Maximum field size = 20 characters.	R
Host IP Address	IP address of this circuit pack. **Default = 192.168.25.10** Maximum field size =15 characters.	R
Subnet Mask	Subnet Mask used by this circuit pack. **Change only if alternate network subnetting is desired**. Value = x.x.x.x, where x is a number between 0 and 255, depending on first 2 digits of Host IP address. **Default = blank**. Maximum field size = 15 characters.	

1. R = Required field.

Use this screen as follows:

1. Type the host name, IP address, and, optionally, the subnet mask. Press TAB or use the arrow keys to move from field to field.

   (If you want to clear the Subnet Mask, move to that field, press CLEAR and then press ENTER.)

2. Press CANCEL if you decide not to enter the data, or, when you have finished typing data, press ENTER to submit the host data. The **TCP/IP Administration** menu reappears.

Local Host Table

```
                          TCP/IP Administration                    Page
                           Local Host Table                      X of X

   IP Address        Host Name                   Aliases

   _______________   ___________________________ ________________________________
   _______________   ___________________________ ________________________________
   _______________   ___________________________ ________________________________
   _______________   ___________________________ ________________________________
   _______________   ___________________________ ________________________________
   _______________   ___________________________ ________________________________
   _______________   ___________________________ ________________________________
   _______________   ___________________________ ________________________________
   _______________   ___________________________ ________________________________
   _______________   ___________________________ ________________________________
   _______________   ___________________________ ________________________________
   _______________   ___________________________ ________________________________
   _______________   ___________________________ ________________________________
   _______________   ___________________________ ________________________________
   _______________   ___________________________ ________________________________

This line is used to provide abbreviated help on the currently selected field.

   CANCEL   REFRESH   ADD   DELETE        HELP        NXTPG   PRVPG
```

Screen 4-8. Local Host Table

This screen is used to resolve host names. Each locally known host appears on this screen in alphabetical order by host name. A maximum of 84 local hosts may be administered. Defaults or preadministered entries may appear when the screen is first accessed. Users can add or change entries.

Field Name	Description
IP Address	IP address of locally known host. Maximum field size = 15 characters.
Host Name	Name of locally known host. Several defaults are provided. Maximum field size = 20 characters.
Aliases	Additional names associated with this host. Maximum field size = 35 characters. Multiple aliases are separated by spaces. Entries starting with a “#” sign are comments. A “#” may be placed anywhere in the field, but anything following the “#” is considered a comment and ignored.

Use this screen as follows:

- Press NXTPG or PRVPG to access other hosts.
- To delete a host entry:
  1. Press TAB or use the arrow keys to move the cursor to the line you want to delete, and then press DELETE**.**
  2. The following prompt appears: **`Are you sure? (Y/N)`**. Type Y and press RETURN. When the screen reappears, the host is removed.
- To add a host, press ADD to access the **Add Host** screen.

Local Host Table — Add Host

```
                          TCP/IP Administration
                             Local Host Table
                                 Add Host

IP Address          Host Name                   Aliases
_______________     _________________________   ______________________________



This line is used to provide abbreviated help on the currently selected field.
  CANCEL   REFRESH   ENTER   CLEAR        HELP
```

Screen 4-9. Add Host

This screen is used to add hosts. When you add a host using this screen, after you press the ENTER function key, the previous screen reappears with the cursor positioned at the beginning of the new entry.

Field Name	Description
IP Address	IP address of locally known host. Maximum field size = 15 characters.
Host Name	Name of locally known host. Maximum field size = 20 characters.
Aliases	Additional names associated with this host. Maximum field size = 35 characters. Multiple aliases are separated by spaces. Entries starting with a “#” sign are comments. A “#” may be placed anywhere in the filed, but anything following the “#” is considered a comment and ignored.

Use this screen as follows:

1. Type the IP address, host name, and any aliases. Type all aliases on one line, but leave a space between each alias.
2. Press the ENTER function key to submit the data.
3. Access the **Add Hosts** screen again and repeat steps 1 and 2 for each new host to be added.

Network Routing Information

```
                          TCP/IP Administration
                      Network Routing Information

1.  Network Routing Daemon

2.  Default Gateway

3.  Network Routing Table

4.  Exit









This line is used to provide abbreviated help on the currently selected field.

  EXIT   REFRESH   ENTER                  HELP
```

Screen 4-10. Network Routing Information

Menu Item	Description
Network Routing Daemon	Allows the user to enable or disable the automatic network routing daemon.
Default Gateway	Allows the user to administer a default gateway.
Network Routing Table	Provides access to all information about other network routes.
Exit	Redisplays the TCP/IP Administration menu.

To use this menu, select the number of the task you wish to perform. (Press the number, or press TAB or use the arrow keys to move the cursor to the desired number, and press ENTER.)

Network Routing Information — Network Routing Daemon

```
                    TCP/IP Administration
                 Network Routing Information
                    Network Routing Daemon


            Network routing daemon state: ___









This line is used to provide abbreviated help on the currently selected field.

 CANCEL  REFRESH                    HELP  STATE
```

Screen 4-11. Network Routing Daemon

This screen is used to view and change the state of the network routing daemon. The `Network routing daemon state` field is filled in when the screen first appears.

Field Name	Description
Network routing Daemon state	Either `on` or `off`. When on, the network routing daemon can automatically find routes to other networks. **Default = on**.

Use this screen as follows:

- If you do not want to change the network routing daemon state, press CANCEL to exit the screen.
- If you want to change the network routing daemon state, press STATE to change the state.

  The following prompt appears: **`Are you sure? (Y/N)`**. Type `Y` and press RETURN**.** The screen reappears with the new state displayed.

  If you type `N` and press RETURN**,** the state is not changed.
- When the desired state is displayed, press CANCEL**.** The **Network Routing Information** menu reappears.

Network Routing Information — Default Gateway

```
                          TCP/IP Administration
                       Network Routing Information
                             Default Gateway

     Name or IP Address: ______________________________      Status: _____



This line is used to provide abbreviated help on the currently selected field.

  CANCEL   REFRESH   ENTER   CLEAR          HELP
```

Screen 4-12. Default Gateway

A default gateway allows the MAPD to communicate with other hosts in other LANs. The Default Gateway screen is used to:

1. Initially identify the default gateway to the MAPD;
2. Change the Name or IP Address and check the Status, or;
3. Verify that the MAPD board is not communicating with another host because the Status of the Default Gateway is “down.”

This screen is protected against multiple users making simultaneous changes as follows:

- If a user presses (ENTER), the system checks to see if the information that was displayed upon entry to this screen has changed.
- If it has, the data is not entered and the user is apprised of the problem and exited from the screen. The previous screen (**TCP/IP Administration**) reappears.

Field Name	Description
Name or IP Address	Name or IP Address of the default gateway, the machine used to route all traffic destined for other networks, for which a specific route is not known. Maximum field size = 20 characters.
Status	Either up or down. If down, the gateway is not willing to route traffic for the MAPD.

Use this screen as follows:

- To enter data the first time, or to change data:
  1. Type the name or IP Address of the gateway to be added.
  2. Press CANCEL if you do not want to add the Name or IP Address you typed, or press ENTER to submit the name or IP address.

     The TCP/IP Administration — Network Routing Information menu reappears. Next time when the **Default Gateway** screen is displayed, the data that was entered or changed will be filled in.
- To remove the default gateway that appears in the field, press CLEAR and then ENTER**.**
- If you are only viewing the screen, press CANCEL to return to the **TCP/IP Administration — Network Routing Information** menu.

Network Routing Information — Network Routing Table

```
                          TCP/IP Administration                    Page
                     Network Routing Information                 x of x
                        Network Routing Table

     Destination                 Type       Gateway                     Status

    ___________________________  _________  ___________________________  ______
    ___________________________  _________  ___________________________  ______
    ___________________________  _________  ___________________________  ______
    ___________________________  _________  ___________________________  ______
    ___________________________  _________  ___________________________  ______
    ___________________________  _________  ___________________________  ______
    ___________________________  _________  ___________________________  ______
    ___________________________  _________  ___________________________  ______
    ___________________________  _________  ___________________________  ______
    ___________________________  _________  ___________________________  ______
    ___________________________  _________  ___________________________  ______
    ___________________________  _________  ___________________________  ______
    ___________________________  _________  ___________________________  ______

This line is used to provide abbreviated help on the currently selected field.

 CANCEL   REFRESH   ADD   DELETE        HELP        NXTPG   PRVPG
```

Screen 4-13. Network Routing Table

This screen has two uses.

1. If automatic routing is not enabled (see Screen 4-13, "Network Routing Daemon"), users can administer the set of network routes.
2. If automatic routing is enabled, it displays the current set of network routes provided by the Network Routing Daemon.

Routes appear on this screen in numerical order by IP address. A maximum of 65 routes may be administered.

NOTE:
If the routing daemon is enabled, the ADD and DELETE keys do not appear on this screen.

Field Name	Description
Destination	Name or IP address of a host, or a partial IP address of a network. Maximum field size = 20 characters.
Type	The type of destination, either `host` or `network`. (Most routes are to network destinations.)
Gateway	Name or IP address of the gateway, the machine used to route all traffic to the given destination. Maximum field size = 20 characters.
Status	Either `up` or `down`. If `down`, the gateway is not willing to route any traffic.

Use this screen as follows:

- Use [NXTPG] and [PRVPG] to step through the pages.
- To delete route entries:
  1. Press [TAB] or use the arrow keys to move the cursor to the line you want to delete, and then press [DELETE]**.** (This deletes the entire line.)
  2. The following prompt appears: **`Are you sure? (Y/N).`** Type `Y` and press [RETURN]**.**

     If you type `N` and press [RETURN], the cursor reappears at the beginning of the line and the line is not deleted.
  3. Repeat steps 1 and 2 until you have deleted all desired routes. Then press [CANCEL] and the **Network Routing Information** menu reappears.
- To add routes, press [ADD] to access the **Add Routes** screen.

Network Routing Table — Add Routes

```
                          TCP/IP Administration
                      Network Routing Information
                         Network Routing Table
                               Add Routes

     Destination                        Type      Gateway
     ____________________________      _______    ____________________________


This line is used to provide abbreviated help on the currently selected field.

   CANCEL   REFRESH   ENTER   CLEAR          HELP
```

Screen 4-14. Add Routes

This screen is used to add network routes. A maximum of 65 routes may be added.

When you add a route, after you press the (ENTER) function key, the previous screen reappears with the cursor positioned at the beginning of the new entry.

Field Name	Description
Destination	Name or IP address of a host, or a partial IP address of a network. Maximum field size = 20 characters.
Type	The type of destination, either `host` or `network`. (Most routes are to network destination.)
Gateway	Name or IP address of the gateway, the machine used to route all traffic to the given destination. Maximum field size = 20 characters.

Use this screen as follows:

1. Type the destination, type, and gateway of the route to be added. Press TAB or use the arrow keys to move from field to field.
2. Press CANCEL if you do not want to add what you just typed, or press ENTER to enter the data. The **Network Routing Information** — **Network Routing Table** screen reappears.
3. Access this screen again and repeat steps 1 and 2 for each new route to be added.

Port Administration

```
                              Port Administration

1.  Application Port Assignment

2.  DLG Administration

3.  CV/LAN Administration

4.  Exit









This line is used to provide abbreviated help on the currently selected field.

  EXIT   REFRESH   ENTER                    HELP
```

Screen 4-15. Port Administration

NOTE:
This screen will appear only if CV/LAN is also installed.

Menu Item	Description
Application Port Assignment	Provides access to screens for assigning the DEFINITY system BRI ports to either the DLG or CallVisor CV/LAN applications.
DLG Administration	Provides access to a screen for viewing, adding, and deleting DLG Clients.
CV/LAN Administration	Provides access to all administrable CV/LAN data.
Exit	Returns you to preceding menu.

To use this menu, select the number of the task you wish to perform. (Press the number, or press RETURN or use the arrow keys to move the cursor to the desired number, and press ENTER.)

Application Port Assignment

```
                    Port Administration
              Application Port Assignment


              Port          Application
               01          _________________
               02          _________________
               03          _________________
               04          _________________
               05          _________________
               06          _________________
               07          _________________
               08          _________________
               09          _________________
               10          _________________
               11          _________________
               12          _________________

This line is used to provide abbreviated help on the currently selected field.

 CANCEL  REFRESH  ENTER  [    ]        HELP  APPL  [    ]  [    ]
```

Screen 4-16. Application Port Assignment

NOTE:
This screen will appear only if CV/LAN is also installed.

Field Name	Description
Application	This field has 3 possible settings: **DLG, CV/LAN**, or blank. The APPL function key is used to step through these choices.

Use this screen as follows:

- To change the application assigned to a port:
  1. Press TAB or use the arrow keys to move the cursor to the line you want to change, and then press APPL until the desired application is shown.
  2. Repeat step 1 until you have changed all desired ports and then press ENTER to submit the changes. The previous screen will appear.
  3. If you do not want any of the changes press CANCEL. The previous screen will appear.

DLG Administration

```
                              DLG Administration

      Port    Client Name or IP Address   Client Link       Client Status
       __     ________________________      __              __________
       __     ________________________      __              __________
       __     ________________________      __              __________
       __     ________________________      __              __________
       __     ________________________      __              __________
       __     ________________________      __              __________
       __     ________________________      __              __________
       __     ________________________      __              __________

This line is used to provide abbreviated help on the currently selected field.

  CANCEL   REFRESH   ADD   DELETE        HELP        UPDATE
```

Screen 4-17. DLG Administration

This screen is used to associate clients with ASAI ports on the DEFINITY system. Links appear in numerical sequence by port number. A maximum of eight links may be administered, but depending on your system and the number of ASAI links you have purchased, you may not be able to make use of all eight entries. One default entry appears on the screen until it is changed: **`Port = 1, Client Name = client`**, **`Client Link = 1`**. The IP address of `client` is 192.168.25.20.

This screen is protected against multiple users making simultaneous changes as follows: If a user presses ADD or DELETE, the system checks whether the information that was displayed upon entry to this screen has changed. If it has, the ADD or DELETE is not performed and the user is apprised of the problem and exited from the screen.

Field Name	Description
Port	Port number used on the DEFINITY system. Valid range is 1 to 12. Each port can only be assigned once.
Client Name or IP Address	Host name or IP address of the client machine authorized to connect to this port. (Network name of the adjunct.) Must be resolvable by the local host table, or be an IP address. Maximum field size = 20 characters.
Client Link	Link number from 1 to 8, used by client when connecting to this port, if client has more than 1 logical link into the DLG. **Default = 1**.
Client Status	**Read-only**. Either **`in use`** or **`idle`**. Idle client states may be modified or deleted. If you attempt to delete a port which is in use, the ASAI link associated with that port is disconnected.

Use this screen as follows:

- To delete a port:
  1. Press [TAB] or use the arrow keys to move the cursor to the line you want to delete, and then press [DELETE]. (This deletes the entire line.)
  2. The following prompt appears: **`Are you sure? (Y/N)`**. Type `Y` and press [RETURN].

     If you type `N` and press [RETURN], the cursor reappears at the beginning of the line and the line is not deleted.
  3. Repeat steps 1 and 2 until you have deleted all desired ports. Then press [CANCEL] and the Main Menu reappears.
- To add a port, press [ADD] to access the **Add Client Link** screen.
- To update the screen with current information, press [UPDATE].

Add Client Link

```
                          DLG Administration
                           Add Client Links


        Port              Client Name or IP Address         Client Link
         __               ________________________             __









This line is used to provide abbreviated help on the currently selected field.

  CANCEL   REFRESH   ENTER   CLEAR        HELP
```

Screen 4-18. Add Client Link

This screen is used to add client links. When you add a client link, after you press the ENTER function key, the previous screen (**DLG Administration**) appears with the cursor at the beginning of the new entry.

This screen is protected against multiple users making simultaneous changes as follows: If a user presses ENTER, the system checks whether the information that was displayed upon entry to this screen has changed. If it has, the data is not entered and the user is apprised of the problem and exited from the screen.

Field Name	Description
Port	Port number used on the DEFINITY system. Valid range is 1 to 12. Each port can only be assigned once.
Client Name or IP Address	Host name or IP address of the client machine authorized to connect to this port. (Network name of the adjunct.) Must be resolvable by the local host table, or be an IP address. Maximum field size = 20 characters.
Client Link	Link number from 1 to 8, used by client when connecting to this port if client has more than 1 logical link into the DLG. **Default = 1**.

Use this screen as follows:

1. Type the port, client name, and number of the first client link you want to add. Press TAB or use the arrow keys to move from field to field.
2. Press CANCEL if you do not want to add what you just typed, or press ENTER to enter the data. The previous screen reappears.
3. Access the **Add Client Link** screen again and repeat steps 1 and 2 for each client link to be added.

CV/LAN Administration

```
                              CV/LAN Administration

                   Node ID   Port   Heartbeat State   Number of Clients


                  signal01   __         ____                ____
                  signal02   __         ____                ____
                  signal03   __         ____                ____
                  signal04   __         ____                ____
                  signal05   __         ____                ____
                  signal06   __         ____                ____
                  signal07   __         ____                ____
                  signal08   __         ____                ____





This line is used to provide abbreviated help on the currently selected field.

  CANCEL  REFRESH                          HELP   STATE  CLIENT   PORT
```

Screen 4-19. CV/LAN Administration

NOTE:
This screen will appear only if CV/LAN is also installed.

Field Name	Description
Node ID	**Read-only**. Node ID used by CV/LAN clients.
Port	Port number used on the DEFINITY system. Valid range is 1 to 12. Each port can only be assigned once.
Heartbeat State	The state of the ASAI heartbeat sever for this node ID. Either ASAI **on** or **off**.
Number of Clients	The number of clients administered to use this node ID.

Use this screen as follows:

- To change the heartbeat state of a node ID:
  1. Press TAB or use the arrow keys to move the cursor to the line you want to change, and then press STATE.
  2. The following prompt appears: **`Are you sure? (Y/N)`**. Type `Y` and press RETURN.

     If you type `N` and press RETURN, the cursor reappears at the beginning of the line and the state is not changed.
  3. Repeat steps 1 and 2 until you have changed the heartbeat state for all the desired node IDs. Then press CANCEL and the previous screen will appear.
- To view or modify the list of clients using a node ID, press TAB or use the arrow keys to move the cursor to the line you want to view or modify, and then press CLIENT. You will then be placed into the **CV/LAN Administration — Assign Port for Node ID signalXX** screen.
- To modify the port number for a node ID, press TAB or use the arrow keys to move the cursor to the line you want to modify, and then press PORT. You will then be placed into the **CV/LAN Administration — Assign Port for Node ID signalXX** screen.

CV/LAN Administration — Clients for Node ID signalXX

```
                          CV/LAN Administration                    Page
                     Clients for Node ID signalXX                 X of X

Client Name or IP Address    Status      Client Name or IP Address    Status
__________________________  __________   __________________________  __________
__________________________  __________   __________________________  __________
__________________________  __________   __________________________  __________
__________________________  __________   __________________________  __________
__________________________  __________   __________________________  __________
__________________________  __________   __________________________  __________
__________________________  __________   __________________________  __________
__________________________  __________   __________________________  __________
__________________________  __________   __________________________  __________
__________________________  __________   __________________________  __________
__________________________  __________   __________________________  __________
__________________________  __________   __________________________  __________
__________________________  __________   __________________________  __________
__________________________  __________   __________________________  __________
__________________________  __________   __________________________  __________

This line is used to provide abbreviated help on the currently selected field.
 CANCEL   REFRESH   ADD   DELETE        HELP      UPDATE   DROP
```

Screen 4-20. Clients for Node ID signalXX

NOTE:
This screen will appear only if CV/LAN is also installed.

This screen is used to associate CV/LAN clients with ASAI ports on the DEFINITY system. It allows the user to add up to 60 entries per port.

Field Name	Description
signalXX	**Read-only**. Node ID number used by CV/LAN clients.
Client Name or IP Address	Host name or IP address of the client machine authorized to connect to this port. (Network name of the adjunct.) Must be resolvable by the local host table, or be an IP address. Maximum field size = 20 characters.
Status	**Read-only**. Either **`in use`** or **`idle`**. Idle client states may be modified or deleted. If you attempt to delete a client which is in use, the connection to that client will be disconnected.

Use this screen as follows:

- To drop the connection to a client:

Press TAB or use the arrow keys to move the cursor to the entry whose connection you want to drop, and then press DROP.

4. The following prompt appears: **`Are you sure? (Y/N)`**. Type Y and press RETURN.

   If you type N the cursor reappears where it was and the connection is not dropped.

5. Repeat Steps 1 and 2 until you have dropped all desired connections. Then press CANCEL and the previous screen will appear.

- To delete a client:

1. Press TAB or use the arrow keys to move the cursor to the entry of the client you want to delete, and then press DELETE.
2. The following prompt appears: **`Are you sure? (Y/N)`**. Type Y and press RETURN.

   If you type N the cursor reappears where it was and the client is not deleted.

3. Repeat Steps 1 and 2 until you have dropped all desired clients. Then press CANCEL and the previous screen will appear.

To add a client, press ADD to get to the **CV/LAN Administration — Add Client** screen.

Clients for Node ID signalXX — Add Client

```
                    CV/LAN Administration
              Clients For Node ID signalXX
                       Add Clients


                 Client Name or IP Address
                 ________________________



This line is used to provide abbreviated help on the currently selected field.

 CANCEL   REFRESH   ENTER   CLEAR        HELP
```

Screen 4-21. Add Client

NOTE:
This screen will appear only if CV/LAN is also installed.

This screen is used to add CV/LAN clients for a specific node ID. A maximum of 60 clients may be administered.

Field Name	Description
signalXX	**Read-Only**. Node ID number used by CV/LAN clients.
Client Name or IP Address	Host name or IP address of the client machine authorized to connect to this port. (Network name of the adjunct.) Must be resolvable by the local host table, or by an IP address. Maximum field size = 20 characters.

Use this screen as follows:

1. Type the client name or IP address you want to add.
2. Press CANCEL if you do not want to add what you just typed, or press ENTER to submit the data. The previous screen will appear.
3. Access the Add Client screen again and repeat steps 1 and 2 for each client to be added.

CV/LAN Administration — Assign Port for Node ID signalXX

```
                    CV/LAN Administration
                Assign Port For Node ID signalXX

                 Currently Assigned to Port __

                        Available Ports
                         00 (unassign)
                          __
                          __
                          __
                          __
                          __
                          __
                          __
                          __
                          __
                          __
                          __
                          __

This line is used to provide abbreviated help on the currently selected field.

  CANCEL   REFRESH                    HELP                  ASSIGN
```

Screen 4-22. Assign Port for Node ID signalXX

NOTE:
This screen will appear only if CV/LAN is also installed.

This screen is used to assign a DEFINITY system virtual BRI port number to a node ID number. Only port numbers which are assigned to the CV/LAN application and are not assigned to other node ID numbers, will appear in the list.

Field Name	Description
signalXX	**Read-only**. Node ID number used by CV/LAN clients.
Available Ports	Port number used on the DEFINITY system. Valid range is 1 to 12.

Use this screen as follows:

1. Press TAB or use the arrow keys to move the cursor to the port number you want to assign (port 00 is used to unassign the node ID), and then press ASSIGN.
2. The following prompt appears: **`Are you sure? (Y/N)`**. Type `Y` and press RETURN.

   If you type `N` the cursor reappears where it was and the port number is not changed.
3. Then press CANCEL and the previous screen will appear.

Maintenance (DLG)

```
                                  Maintenance

 1.  Removable Media Operations...

 2.  Set System Time and Date

 3.  Reset System...

 4.  System Logs

 5.  Security Logs...

 6.  Diagnostics...

 7.  Application Components

 8.  Exit

This line is used to provide abbreviated help on the currently selected field.

  [CANCEL] [REFRESH] [ENTER] [      ]        [HELP] [      ] [      ] [      ]
```

Screen 4-23. Maintenance (DLG)

Maintenance (DLG and CV/LAN)

```
                                Maintenance

 1.  Removable Media Operations...

 2.  Set System Time and Date

 3.  Reset System...

 4.  System Logs

 5.  Security Logs...

 6.  Diagnostics...

 7.  Application Components

 8.  CV/LAN Utilities...

 9.  Exit
This line is used to provide abbreviated help on the currently selected field.

  CANCEL   REFRESH   ENTER                    HELP
```

Screen 4-24. Maintenance (DLG and CV/LAN)

NOTE:
This screen will appear only if CV/LAN is also installed.

Menu Item	Description
Removable Media Operations...	Provides access to the Removable Media Operations menu.
Set System Time and Date	Allows the user to set system time and date, including time zone.
Reset System...	Provides access to the Reset System menu.
System Logs	Provides access to System Logs.
Security Logs...	Provides access to Security Logs menu.
Diagnostics...	Provides access to the Diagnostics Menu.

Menu Item	Description
Application Components	Provides access to identification information about each application.
CV/LAN Utilities	Provides access to a variety of CV/LAN utilities. Only applies to screen 4 -24.
Exit	Returns the user to previous screen.

To use this menu, press the number of the screen you wish to access, or press TAB or use the arrow keys to move the cursor to the desired number, and press ENTER.

Removable Media Operations

```
                                Maintenance
                        Removable Media Operations

 1.  Format Removable Media

 2.  Save Configuration Data To Removable Media

 3.  Restore Configuration Data From Removable Media

 4.  Exit





This line is used to provide abbreviated help on the currently selected field.

  CANCEL   REFRESH   ENTER                    HELP
```

Screen 4-25. Removable Media Operations

Menu Item	Description
Format Removable Media	Instructs the system to format the removable media.
Save Configuration Data to Removable Media	Instructs the system to start a backup of all its configuration data.
Restore Configuration Data From Removable Media	Begins restoring configuration data from removable media. **The system must be rebooted after performing a restore.**
Exit	Returns you to previous screen.

Use this screen as follows:

1. Select the activity you want to perform. Press the corresponding number, or press TAB or use the arrow keys and press ENTER.
2. For each activity, the following prompt appears: **`Are you sure? (Y/N)`**. Type `Y` and press RETURN. The activity is shown on the screen in real time.

   If you type `N` and press RETURN, this screen reappears.
3. After the activity you select is completed, the **Maintenance** menu reappears.

Set System Time and Date

```
                                Maintenance
                          Set System Time and Date


            Time: __:__              Month: __      Day: __     Year: ____

                         Standard Timezone Information
                           ST Name:         __________
                           Offset Time:     __:__
                           Direction (E/W): _

                         Daylight Savings Timezone Information
                           DST Name:       ___________




This line is used to provide abbreviated help on the currently selected field.

  CANCEL   REFRESH   ENTER   CLEAR          HELP
```

Screen 4-26. Set System Time and Date

This screen is used to set the system time, date, and time zone. Setting a second time zone is optional.

Field Name	Description
Time	Hours and minutes (xx:xx), plus a time zone name up to 10 characters (for example, EDT). The time zone to the right of the time field is the time zone currently in use and is display-only.
Month	Two digits (01-12)
Day	Two digits (01-31)
Year	Four digits (xxxx)
Standard Timezone Information Name:	The name or abbreviation of the standard time zone for your location. A list of standard abbreviations follows this table.

Field Name	Description
Offset Time:	The number of hours that vary from Universal Time (also known as Greenwich Mean Time). See standard time zone.
Direction (E/W)	The direction your location is from the Universal Time zone, east (E) or west (W).
Daylight Savings Timezone Information Name	The name or abbreviation of a second, optional time zone. A list of standard abbreviations follows this table. If you enter any value, this time zone follows U.S. Daylight Savings rules. In the U.S., Daylight Savings begins on the first Sunday of April at 2 am. Standard Time begins on the last Sunday of October at 2 am. If this field is blank, then Daylight Savings does not apply.

Standard Time Zone Name	Standard Time Zone Abbreviation	Daylight Savings Abbreviation	Offset Time	(Offset) Direction
Greenwich	GMT	GDT	00:00	W
Atlantic	AST	ADT	04:00	W
Eastern	EST	EDT	05:00	W
Central	CST	CDT	06:00	W
Mountain	MST	MDT	07:00	W
Pacific	PST	PDT	08:00	W
Yukon	YST	YDT	08:00	W
Alaska	none (use full name)	none (use full name)	10:00	W
Hawaii	HST	HDT	10:00	W
Beijing	BST	BDT	11:00	W

To use this screen:

1. On the top line, type the time, month, day, and year. Press TAB or use the arrow keys to move from field to field.
2. Under **`Standard Timezone Information,`** type the name or abbreviation in the **`name`** field, the offset time, and the direction, as follows:
   - If you enter a name or abbreviation from the list in this section, then you do not have to enter offset time or direction.
   - If you leave this field blank, or if you clear the offset time or direction, they are supplied automatically from the preceding table standard time zone.

- If you enter a name or abbreviation that is **not** in the table, then you must also enter offset time and direction.

  NOTE:
  The system determines the time zone that appears to the right of the **`Time`** field in the top line of the screen according to what is entered in these fields and the current date and time.

3. If you do not want to enter a second time zone, be sure **`DST Name`** is clear and then skip to step 4.

   If you do want to enter a second time zone that follows U.S. Daylight Savings rules, under **`Daylight Savings Timezone Information`**, type the name or abbreviation in the Name field as you did in step 2. However, note the following conventions for this field:

   - If you type **any** value in this field, then you are setting an alternate timezone that follows U.S. Daylight Savings rules.
   - If you want a second time zone but do not want U.S. Daylight Savings rules to apply, then make sure the field is blank and manually change the system clock on the appropriate date.

4. Press ENTER when you are done typing data. The **Maintenance** menu reappears.

Reset System (DLG)

```
                                Maintenance
                               Reset System

 1.  Shutdown

 2.  Reboot System

 3.  Restart DLG

 4.  Exit









This line is used to provide abbreviated help on the currently selected field.

  CANCEL   REFRESH   ENTER                    HELP
```

Screen 4-27. Reset System (DLG)

Reset System (DLG and CV/LAN)

```
                                Maintenance
                               Reset System

 1.  Shutdown

 2.  Reboot System

 3.  Restart DLG

 4.  Restart CV/LAN

 5.  Exit





This line is used to provide abbreviated help on the currently selected field.

  CANCEL   REFRESH   ENTER                HELP
```

Screen 4-28. Reset System (DLG and CV/LAN)

NOTE:
This screen will appear only if CV/LAN is also installed.

Menu Item	Description
Shutdown	Shuts down the entire system. **Required before powering down the system or removing system assembly.**
Reboot System	Reinitializes all hardware and software on the system assembly.
Restart DLG	Reintializes the DLG application.
Restart CV/LAN	Reintializes the CallVisor CV/LAN application.Only applies to screen 4-28.
Exit	Returns you to the previous menu.

Use this screen as follows:

1. Select the activity you want to perform. Press the number or press TAB or use the arrow keys and press ENTER.
2. The following prompt appears: **`Are you sure? (Y/N)`**. Type Y and press RETURN.

   If you type N and press RETURN, this screen reappears.
3. For **`Shutdown`**:

   It is advisable to run this from the system console.
4. For **`Reboot System`**:

   The screen displays messages during the reboot. If you run this from the system console, the login prompt will appear when the procedure is complete. From a remote connection, you have to reconnect later (approximately 5 to 10 minutes).
5. For **`Restart DLG`** or **`Restart CV/LAN`**:

   The application will be restarted. This may be done from either the system console or a remote connection.

System Logs

```
      <Date>                        Maintenance                    Page XXXX of XXXX
                                    System Logs
Time     Type     Process    Description
_______  ______   ________   ________________________________________________________

This line is used to provide abbreviated help on the currently selected field.
  CANCEL   REFRESH   NXTDAY   PRVDAY        HELP      NXTPG   PRVPG
```

Screen 4-29. System Logs

This screen displays up-to-the-minute information on system activity, including errors.

Field Name	Description
Date	Month, day and year (MM/DD/YYYY) changes as you move among dates. If an asterisk (*) follows the day, this indicates an overflow log for this date. This second log should be considered a separate day when moving through days.
Time	Time of the log entry (Hour:Minutes:Seconds)
Type	Severity of the log entry (**FYI, WARNING**, or **CRITICAL**)
Process	The process that created the log entry. Examples are **oam_ui** and **Brouter**.
Description	Description of the log entry

To use this screen, press NXTDAY and PRVDAY to move among days. Press NXTPG and PRVPG to step through multiple pages.

Security Logs

```
                                Maintenance
                               Security Logs

 1.  Login Attempt Log

 2.  Client Access Logs

 3.  System Reset Log

 4.  Command Logs

 5.  Exit









This line is used to provide abbreviated help on the currently selected field.

  CANCEL   REFRESH   ENTER                    HELP
```

Screen 4-30. Security Logs

Menu Item	Description
Login Attempt Log	Lists login attempts that failed after 5 or more attempts.
Client Access Logs	Provide access to all client connection attempts.
System Reset Log	Provides access to all system boot records.
Command Logs	List all commands executed from administration/maintenance screens, such as adding a new login. List all changes to parameters.

Use this screen as follows:

1. Select the item for which you would like to see the information. Press the number, or press TAB or use the arrow keys and press ENTER**.** The applicable screen appears.
2. When you are done viewing data, press Exit to return to the **Maintenance** menu.

Security Logs — Login Attempt Log

```
                          Maintenance                    Page X of X
                          System Logs
                       Login Attempt Log

Date and Time        User            Terminal Port

CANCEL  REFRESH                  HELP          NXTPG   PRVPG
```

Screen 4-31. Login Attempt Log

Field Name	Description
Date and Time	Date and time of the invalid login attempt.
User	Login of the user who attempted to log in. After five failed login attempts occur, all are logged. If fewer than five are attempted, then none is logged.
Terminal Port	MAPD port through which the login attempt was made.

To view information on this screen, press NXTPG and PRVPG to step through multiple pages.

Security Logs — Client Access Log

```
   <Date>                          Maintenance                  Page XXXX of XXXX
                                 Security Logs
                               Client Access Logs
Time     Type      Process  Description
_______  ________  _______  ____________________________________________________
This line is used to provide abbreviated help on the currently selected field.
  CANCEL   REFRESH   NXTDAY   PRVDAY        HELP        NXTPG   PRVPG
```

Screen 4-32. Client Access Log

Field Name	Description
Date	Month, day, and year (MM/DD/YYYY) changes as you move among dates. If an asterisk (*) follows the day, this indicates an overflow log for this date. This second log should be considered a separate day when moving through days.
Time	Time of the client access (Hour:Minutes:Seconds).
Type	Severity Indicator (**FYI, WARNING**, or **CRITICAL**).
Process	Process that created the log entry. Examples are `Brouter` and **oam_ui**.
Description	Description of the client access activity. Example: **client/3520 TCP_Connect**.

To use this screen, press NXTDAY and PRVDAY to move among days. Press NXTPG and, PRVPG to step through multiple pages.

Security Logs — System Reset Log

```
                          Maintenance                    Page XXXX of XXXX
                         Security Logs
                       System Reset Log

Time      Date          Description
____      ________      ____________________________________________________

CANCEL  REFRESH  [     ]  [     ]        HELP  [     ]  NXTPG  PRVPG
```

Screen 4-33. System Reset Log

Field Name	Description
Time	Time of the reset (Hour:Minutes:Seconds).
Date	Date of the reset (MM/DD/YY).
Description	Description of the reset (system boot).

To use this screen, press NXTPG and PRVPG to step through multiple pages.

Security Logs — Command Log

```
     <Date>                        Maintenance                    Page XXXX of XXXX
                                   Security Logs
                                    Command Logs
 Time      User            Description
 ____      ____            ___________________________________________________

 This line is used to provide abbreviated help on the currently selected field.
   CANCEL   REFRESH   NXTDAY   PRVDAY        HELP        NXTPG   PRVPG
```

Screen 4-34. Command Log

Field Name	Description
Date	Month, day, and year (MM/DD/YYYY) changes as you move among dates. If an asterisk (*) follows the day, this indicates an overflow log for this date. This second log should be considered a separate day when moving through days.
Time	Time of the client access (Hour:Minutes:Seconds).
User	The login_id of the user executing the command.
Description	Description of the command that was executed. **Example: delete: route: 135.20.87 network asaimapd.**

This screen displays up-to-the-minute data for the current day. Most recent data is displayed first.

To use this screen, press NXTDAY and PRVDAY keys to move among days. Press NXTPG and PRVPG to step through multiple pages.

Diagnostics

```
                                   Maintenance
                                   Diagnostics

 1.  Ping Host

 2.  Hardware Alarms

 3.  Hardware Status

 4.  Exit









This line is used to provide abbreviated help on the currently selected field.

  CANCEL   REFRESH   ENTER                    HELP
```

Screen 4-35. Diagnostics

This screen allows the user to test connections and check alarms and status for hardware.

Menu Item	Description
Ping Host	Provides access to the Ping Host Screen.
Hardware Alarms	Displays hardware alarms.
Hardware Status	Displays hardware status.
Exit	Returns you to the previous menu.

Use this screen as follows:

1. Select the item for which you would like to see the information. Press the number, or press TAB or use the arrow keys and press ENTER. The applicable screen appears.
2. When you are done viewing data, press EXIT to return to the **Maintenance** menu.

Diagnostics — Ping Host

```
                                  Maintenance
                                  Diagnostics
                                   Ping Host


                    Host Name or IP Address: ____________________
                    Packet count:            ___
                    Packet size:             ___









This line is used to provide abbreviated help on the currently selected field.

  CANCEL   REFRESH   ENTER   CLEAR        HELP
```

Screen 4-36. Ping Host

This screen allows the user to test the connection between the MAPD and any host.

Field Name	Description
Host Name or IP Address	Name or IP address of the host you are trying to ping. Maximum field size = 20 characters.
Packet Count	The number of packets sent between the MAPD and the host. Valid range is 1-999. **Default = 1**.
Packet Size	The size of the packets sent between the MAPD and the host. Valid range is 64-999. **Default = 64**.

Use this screen as follows:

1. Type the host name, IP Address, packet count, and packet size. Use TAB or the arrow keys to move from field to field.
2. When you are done entering data, press ENTER to enter the data, or CANCEL to return to the **Maintenance** menu. If you press ENTER, this displays the results and redisplays this screen. (You can do multiple pings.)

Diagnostics — Hardware Alarms

```
TN Code/Vintage:
        TN801B   V1
FW Version:
        BOOT=777        APPL=15000
RM Version:
        BOOT=0.1.444    APPL=0.1.4
Alarm Count: 2
        platform ambient temperature is high [WARNING]
        voltage out of range [MINOR]



(EOF):
```

Screen 4-37. Hardware Alarms

This is a read-only screen that displays any hardware alarms.

Field Name	Description
TN Code/Vintage	Displays the MAPD (TN801B) board code and vintage as reported by the DEFINITY system.
FW Version	Displays the firmware versions.
RM Version	Displays the remote maintenance firmware versions.
Alarm Count	Displays the number of active alarms followed by a description of each alarm and its severity.

NOTE:
Contact the TSC if there are any alarms or if any of the tests fail.

Use this screen as follows:

- Press RETURN to return to the **Diagnostics** menu.

Diagnostics — Hardware Status

```
TN Code/Vintage:
        TN801B   V1
FW Version:
        BOOT=777        APPL=15000
RM Version:
        BOOT=0.1.444    APPL=0.1.4

Alarm Count: 2
        platform ambient temperature is high [WARNING]
        voltage out of range [MINOR]

Temperatures:
            actual           min             max
Temp1    99.71 deg F    75.00 deg F     104.00 deg F
Temp2    85.53 deg F    75.00 deg F     104.00 deg F

Voltages:
            actual           min             max
+VEE      +12.18V         +11.40V         +12.60V
-VEE      -12.12V         -12.60V         -11.40V
+VCC       +5.11V          +4.75V          +5.25V
-VCC       -5.19V          -5.25V          -4.75V
3.3V       +3.32V          +3.13V          +3.46V

(EOF):
```

Screen 4-38. Hardware Status

This is a read-only screen that displays hardware status.

Field Name	Description
TN Code/Vintage	Displays the MAPD (TN801B) board code and vintage as reported by the DEFINITY system.
FW Version	Displays the firmware version.
RM Version	Displays the remote maintenance firmware version.
Alarm count	Displays the number of active alarms followed by a description of each alarm and its severity.

NOTE:
Contact the TSC if any alarms exist or if any tests fail.

Use this screen as follows:

- Press RETURN to return to the **Diagnostics** menu.

Application Components

```
=========== Application Packages ===========
DLG             DLG application
                (MAPD) Release 2.0, Issue 2.01
brm             BRM driver
                (MAPD) Release 2.0, Issue 2.01
cvasai          AVAYA CALLVISOR PC ASAI
                (MAPD) 6.1.0
cvisdn          AVAYA CALLVISOR PC ISDN
                (MAPD) 6.1.0
cvlansrv        AVAYA CV/LAN SERVER
                (MAPD) 6.1.0
cvmapd          AVAYA CALLVISOR PC OAM
                (MAPD) 6.1.0
klog            MAPD klog driver
                (MAPD) Release 2.0, Issue 2.01
mapd-ae         MAPD Application Environment
                (MAPD) Release 2.0, Issue 2.01

============ Platform Packages =============
angl            ANGEL Driver
                (MAPD) Release 2.0, Issue 2.01
bri             BRI Driver
                (MAPD) Release 2.0, Issue 2.01
:
```

Screen 4-39. Application Components

The above screen shows a sample output screen from the Application Components.

CV/LAN Utilities

```
                                Maintenance
                             CV/LAN Utilities

 1.  ASAI Test

 2.  ASAI Trace

 3.  ISDN Trace

 4.  ISDN Alarm

 5.  Exit





This line is used to provide abbreviated help on the currently selected field.

   EXIT    REFRESH   ENTER                    HELP
```

Screen 4-40. CV/LAN Utilities

NOTE:
This screen will appear only if CV/LAN is also installed.

Menu Item	Description
ASAI Test	Tests communication with the DEFINITY system for each node ID using ASAI heartbeats.
ASAI Trace	Decodes an ASAI message stream.
ISDN Trace	Traces messages through the kernel protocol stack. Used in debugging.
ISDN Alarm	Activates or deactivates ASAI maintenance alarming on the DEFINITY system.
Exit	Returns you to preceding menu.

To use this menu, select the number of the task you wish to perform. (Press the number, or press TAB or use the arrow keys to move the cursor to the desired number, and press ENTER.)

CV/LAN Utilities — ASAI Test

```
Heartbeat with switch for ASAI node signal01 was successful.

Heatbeat with switch for ASAI node signal02 was successful.

Unexpected capability = C_ABORT for ASAI node signal03 received.
The capability expected was C_HB_CONF
Primitive type response for ASAI node signal03 !=C_POS_ACK
Primitive type response received = C_REQUEST
Heartbeat test with switch for ASAI node signal03 failed.
```

Screen 4-41. ASAI Test

NOTE:
This screen will appear only if CV/LAN is also installed.

The above screen shows a sample output screen from the ASAI test CV/LAN utility.

CV/LAN Utilities — ASAI Trace

```
Wed Oct 16 12:16:00 1996

**********************************************

<3P Domain Request> ADJ=>sw {0}crv=0006 sec=505.39
Domain: Extension            24051
**********************************************


**********************************************
SW->adj *0* crv=8006 sec=505.42

<Event Notif>     ADJ=>sw *0*crv=0008 sec=507.60
Domain: Vector Dir Number   24100
**********************************************


**********************************************
SW->adj *0* crv-8008 sec=507.67

<Event Report>     SW->adj *0*crv=8006 sec 508.42
```

Screen 4-42. ASAI Trace

NOTE:
This screen will appear only if CV/LAN is also installed.

The above screen shows a sample output screen from the ASAI trace CV/LAN utility.

CV/LAN Utilities — ISDN Trace

```
50539 IPCI gviSendSignal/0 MSG_TR[0]: 95 1c 00 08 02 00 06 64 96 1c 14 91
50539 IPCI gviSendSignal/12 MSG_TR[0]: a1 11 02 01 03 02 01 c4 40 09 96 49
50539 IPCI gviSendSignal/24 MSG_TR[0]: 06 83 32 34 30 35 b1 00 00 00 00 00
50542 IPCI rcv cc/0 MSG_TR[0]: 91 0e 00 08 02 80 06 62 96 1c 06 91
50542 IPCI rcv cc/12 MSG_TR[0]: a2 03 02 01 03 00 00 00 00 00 00 00
50760 IPCI gviSendSignal/0 MSG_TR[0]: 95 1c 00 08 02 00 08 64 96 1c 14 91
50760 IPCI gviSendSignal/12 MSG_TR[0]: a1 11 02 01 03 02 01 8a 40 09 96 49
50760 IPCI gviSendSignal/24 MSG_TR[0]: 06 8c 32 34 31 30 b0 00 00 00 00 00
50767 IPCI rcv cc/0 MSG_TR[0]: 91 0e 00 08 02 80 08 62 96 1c 06 91
50767 IPCI rcv cc/12 MSG_TR[0]: a2 03 02 01 03 00 00 00 00 00 00 00
50842 IPCI rcv cc/0 MSG_TR[0]: 91 1e 00 08 02 80 06 62 96 1c 16 91
50842 IPCI rcv cc/12 MSG_TR[0]: a1 13 02 01 02 02 01 95 40 0b 10 02
50842 IPCI rcv cc/24 MSG_TR[0]: 02 68 96 44 01 81 47 01 97 00 00 00
51063 IPCI rcv cc/0 MSG_TR[0]: 91 36 00 08 02 80 06 62 96 1c 2e 91
51063 IPCI rcv cc/12 MSG_TR[0]: a1 2b 02 01 02 02 01 95 40 23 0c 06
51063 IPCI rcv cc/24 MSG_TR[0]: 80 32 34 30 35 31 10 02 02 68 6c 06
51063 IPCI rcv cc/36 MSG_TR[0]: 80 32 34 30 35 31 70 06 80 32 34 31
51063 IPCI rcv cc/48 MSG_TR[0]: 30 30 96 44 01 81 47 01 9d 00 00 00
51066 IPCI rcv cc/0 MSG_TR[0]: 91 33 00 08 02 80 08 62 96 1c 2b 91
51066 IPCI rcv cc/12 MSG_TR[0]: a1 28 02 01 02 02 01 95 40 20 10 02
51066 IPCI rcv cc/24 MSG_TR[0]: 02 68 6c 06 80 32 34 30 35 31 70 06
51066 IPCI rcv cc/36 MSG_TR[0]: 80 32 34 31 30 30 96 47 01 91 49 06
51066 IPCI rcv cc/48 MSG_TR[0]: 8c 32 34 31 30 b0 00 00 00 00 00 00
```

Screen 4-43. ISDN Trace

NOTE:
This screen will appear only if CV/LAN is also installed.

The above screen shows a sample output screen from the ISDN trace CV/LAN utility.

CV/LAN Utilities — ISDN Alarm

```
                                Maintenance
                             CV/LAN Utilities
                                ISDN Alarm



                 Node ID: __   Timeout: ____   Action: __________



This line is used to provide abbreviated help on the currently selected field.

  CANCEL   REFRESH   ENTER                    HELP   ACTION
```

Screen 4-44. ISDN Alarm

NOTE:
This screen will appear only if CV/LAN is also installed.

This screen can be used to activate or deactivate ASAI alarms on the DEFINITY system for a specific virtual BRI port.

Field Name	Description
Node ID	Node ID number used by CV/LAN clients.
Timeout	The maximum amount of time in seconds you are willing to wait for the DEFINITY system to respond to the activate/deactivate request.
Action	**Read only**. This field determines if an activate or deactivate message will be sent to the DEFINITY system.

Use this screen as follows:

- To activate or deactivate ASAI alarms on the DEFINITY system for a specific virtual BRI port, enter the port number, timeout and press ACTION until the desired action is displayed. Then press ENTER.

DLG Port Status/Control

```
                         DLG Port Status/Control

          DEFINITY     TCP/IP       DLG     Messages    Messages    Message
            Port       Connection   Service     to         from      Period
Port       State       State       State    DEFINITY    DEFINITY   (minutes)

 __   _________   __________  _________    ____        ____        ___
 __   _________   __________  _________    ____        ____        ___
 __   _________   __________  _________    ____        ____        ___
 __   _________   __________  _________    ____        ____        ___
 __   _________   __________  _________    ____        ____        ___
 __   _________   __________  _________    ____        ____        ___
 __   _________   __________  _________    ____        ____        ___
 __   _________   __________  _________    ____        ____        ___


This line is used to provide abbreviated help on the currently selected field.

 CANCEL   REFRESH   [      ]   MSGPER        HELP   STATE   UPDATE   DROP
```

Screen 4-45. DLG Port Status/Control

This screen can be used to change a port's service state or close a port's TCP connection. Changing the port's service state affects the port's other states as well.

Field Name	Description
Port	Port number (1-12) used by the DEFINITY system. To determine which client is associated with a particular port, See the Screen 4-19, ''DLG Administration.''
DEFINITY system Port State	**Read-only**. Possible port states are as follows: ■ **NOT CONNECTED** — The BRI port is not administered (or is busied out) on the DEFINITY system or Layer 1 is down. ■ **CONNECTED DOWN** — The BRI port is administered on the DEFINITY system but Layer 2 is not established. ■ **CONNECTED** — The BRI port is administered on the DEFINITY system and Layer 2 is established. ■ **BUSIEDOUT** — The BRI Port is administered on the DEFINITY system but has been busied out in the BRI driver on the MAPD. ■ **SW INTF DN** — The DEFINITY system interface (angel) is down. ■ **SW INTF DN BSY** — The DEFINITY system interface (angel) is down and the BRI Port has been busied out in the BRI driver on the MAPD.

Field Name	Description
TCP/IP Connection State	**Read-only**. ■ **`REACHABLE`** — The client is responding to ICMP echo requests (host recognizes client but cannot communicate). ■ **`UNREACHABLE`** — The client is not responding to ICMP echo requests (host does not recognize client). ■ **`CLOSED`** — The TCP connection has been closed. ■ **`LISTEN`** — TCP is listening for incoming connections. ■ **`SYN SENT`** — TCP is actively trying to establish a connection. ■ **`SYN RECEIVED`** — Initial synchronization of the TCP connection is under way. ■ **`ESTABLISHED`** — The TCP connection has been established. This is the steady state when the client is connected. ■ **`CLOSE WAIT`** — The client has closed its TCP connection. The MAPD's TCP is waiting for a close. ■ **`FIN WAIT 1`** — The MAPD's TCP connection is initiating a close. ■ **`CLOSING`** — The MAPD's TCP has notified the client's TCP of its intent to close. It is now awaiting acknowledgment. ■ **`LAST ACK`** — The client has closed its TCP connection. The MAPD has closed its TCP connection and is now awaiting acknowledgment. ■ **`FIN WAIT 2`** — The MAPD's TCP connection has initiated a close and is now awaiting shutdown from the client's TCP. ■ **`TIME WAIT`** — The MAPD has closed its TCP connection and is waiting for retransmission of the shutdown from the client's TCP. ■ **`UNKNOWN`** — Self-explanatory. Contact the TSC.
DLG Service State	Either **`in service`** or **`busied out.`**

Field Name	Description
Messages to the DEFINITY system	**Read-only**. The number of messages sent to the DEFINITY system in the last message collection period.
Messages from the DEFINITY system	**Read-only**. The number of messages sent by the DEFINITY system in the last message collection period.
Messages Period (minutes)	The time period (in minutes) during which messages are sent and received. This is a per-port number entered on the **Message Collection Period** screen. **Default = 30**.

Use this screen as follows:

- To change the port's service state:
  1. Press TAB or use the arrow keys to move to the desired port.
  2. Press STATE to toggle the service state:

     NOTE:
     Busying a port out causes that port's TCP connection (if one exists) to be closed. No new connections are permitted on that port until the port is placed back in service.

  3. The following prompt appears: **`Are you sure? (Y/N)`**. Type Y and press RETURN**.** The **DLG Port Status/Control** screen reappears, showing the changed state.

     If you type N and press RETURN the **DLG Port Status/Control** screen immediately reappears.
- To update the screen with current information, press UPDATE
- To close a port's TCP connection:
  1. Press TAB or use the arrow keys to move to the desired port.
  2. Press DROP to close the port's TCP connection.

     NOTE:
     New connections are permitted on this port.

  3. The following prompt appears: **`Are you sure? (Y/N)`**. Type Y and press RETURN**.** The **DLG Port Status/Control** screen reappears, showing the change.

     If you type N and press RETURN the **DLG Port Status/Control** screen immediately reappears.
- To set the Message Collection Period for a port, select the port and press MSGPER**.** The **Message Collection Period** screen appears. If no ports are administered, pressing MSGPER does nothing.

DLG Port Status/Control — Message Collection Period

```
                    DLG Port Status/Control
                  Message Collection Period



        Port: XX          Client: YY      Link: ZZ

                           Period: ____



This line is used to provide abbreviated help on the currently selected field.

 CANCEL  REFRESH  ENTER  CLEAR        HELP
```

Screen 4-46. Message Collection Period

This screen enables you to set the message collection period for a port. When the screen is first displayed, a port number (1 to 12) replaces **xx** in the **Port** field, the client's name or IP address replaces **yy** in the **Client** field, and the client's link replaces **zz** in the **Link** field. The port number comes from the previous screen (whatever port the cursor was on).

After you enter a value for **Period** on this screen and press ENTER the previous screen reappears with the cursor positioned at the beginning of the new entry. Changing the collection period clears the traffic counts (messages to the DEFINITY system and messages from the DEFINITY system) on the **DLG Port Status/Control** screen.

Field Name	Description
Port	The port for which messages are to be collected. Display-only.
Client	The client name or IP address for which messages are to be collected. Display-only.
Link	The client link for which messages are to be collected.
Period	The time period (in minutes) during which messages are to be collected. Range = 1-720. **Default = 30**.

Use this screen as follows:

1. Type the desired time period, in minutes, up to 12 hours.
2. When you are done entering the data, press ENTER. The screen you were on previously (**DLG Port Status/Control**) reappears.

CV/LAN Port Status/Control

```
                         CV/LAN Port Status/Control

                DEFINITY        Number of     CV/LAN     Messages  Messages  Message
     Node        Port            Client      Service       to        from     Period
Port  ID        State        Connections    State      DEFINITY  DEFINITY (minutes)

 __  __  ________________  _______  _____________  _______  _______   ___
 __  __  ________________  _______  _____________  _______  _______   ___
 __  __  ________________  _______  _____________  _______  _______   ___
 __  __  ________________  _______  _____________  _______  _______   ___
 __  __  ________________  _______  _____________  _______  _______   ___
 __  __  ________________  _______  _____________  _______  _______   ___
 __  __  ________________  _______  _____________  _______  _______   ___
 __  __  ________________  _______  _____________  _______  _______   ___


 Press STATE, DROP, or MSGPER to effect this entry

 CANCEL  REFRESH          MSGPER        HELP   STATE   UPDATE   DROP
```

Screen 4-47. CV/LAN Port Status/Control

NOTE:
This screen will appear only if CV/LAN is also installed.

This screen can be used to view and/or change message traffic statistics.

Field Name	Description
Port	Port number (1-12) used by the DEFINITY system. See the "CV/LAN Administration" screen to determine which clients are associated with a particular port.
Node ID	Node ID used by CV/LAN Clients.
The DEFINITY system Port State	**Read-only**. Possible port states are as follows: ■ **NOT CONNECTED** — The BRI port is not administered (or is busied out) on the DEFINITY system, or Layer 1 is down. ■ **CONNECTED DOWN** — The BRI port is administered on the DEFINITY system but Layer 2 is not established. ■ **CONNECTED** — The BRI port is administered on the DEFINITY system and Layer 2 is established.

Field Name	Description
The DEFINITY system Port State (continued)	■ **BUSIEDOUT** — The BRI Port is administered on the DEFINITY system but has been busied out in the BRI driver on the MAPD. ■ **SW INTF DN** — The DEFINITY system interface (angel) is down. ■ **SW INTF DN BSY** — The DEFINITY system interface (angel) is down and the BRI Port has been busied out in the BRI driver on the MAPD.
Number of Client Connections	**Read-only**. Number of currently connected clients.
CV/LAN Service State	Either `in` **service** or **out of service**.
Messages to the DEFINITY system	**Read-only**. The number of messages sent to the DEFINITY system in the last message collection period.
Messages from the DEFINITY system	**Read-only**. The number of messages sent by the DEFINITY system in the last message collection period.
Message Period	The time period (in minutes) during which messages are sent and received. This is a per port number. **Default = 30**.

Use this screen as follows:

- To change the port's CV/LAN service state:
  1. Press [TAB] or use the arrow keys to move to the desired port.
  2. Press [STATE] to toggle the Service State.

     NOTE:
     Busying a port out causes that port's TCP connection (if one exists) to be closed. No new connections are permitted on that port until the port is placed back in service.

  3. The following prompt appears: **Are you sure? (Y/N)**. Type Y and press [RETURN]. The **CV/LAN Port Status/Control** screen reappears showing the changed state.

     If you type N and press [RETURN], the **CV/LAN Port Status/Control** screen immediately reappears.

- To drop all client connections for a specific port:
  1. Press TAB or use the arrow keys to move to the desired port.
  2. Press DROP to drop all client connections.

     NOTE:
     New connections are permitted on this port

  3. The following prompt appears: **`Are you sure? (Y/N)`**. Type `Y` and press RETURN. The **CV/LAN Port Status/Control** screen reappears showing the change.

     If you type `N` and press RETURN, the **CV/LAN Port Status/Control** screen will reappear.
- To set the Message Collection Period for a port, select the port and press MSGPER. The **Message Collection Period** screen appears. If no ports are administered, pressing MSGPER does nothing.

CV/LAN Port Status/Control — Message Collection Period

```
                    CV/LAN Port Status/Control
                     Message Collection Period


                  Node ID: signalXX   Port: yy

                          Period: ____


This line is used to provide abbreviated help on the currently selected field.

 CANCEL   REFRESH   ENTER   CLEAR        HELP
```

Screen 4-48. Message Collection Period

NOTE:
This screen will appear only if CV/LAN is also installed.

This screen enables you to set the message collection period for a port. When this screen is first displayed, a port number (1 to 12) replaces **yy** in the **port** field. The port number comes from the previous screen (whichever port the cursor was on).

After you enter a value for **Period** on this screen and press ENTER the previous screen reappears with the cursor positioned at the beginning of the new entry. Changing the collection period clears the traffic counts (messages to the DEFINITY system and messages from the DEFINITY system) on the **CV/LAN Port Status/Control** screen.

Field Name	Description
Node ID	**Read-only**. Node ID number used by CV/LAN clients.
Port	The port for which messages are to be collected. **Display-only**.
Period	The time period (in minutes) during which messages are to be collected. Range = 1-720**. Default = 30.**

Use this screen as follows:

1. Type the desired time period, in minutes, up to 12 hours**.**
2. When you are done entering the data, press (ENTER). The screen you were on previously (**CV/LAN Port Status/Control**) will reappear.

CVLAN System Administration

5

This chapter presents the screens used to administer and maintain the CV/LAN system. See Appendix E, "Sample Customer Configurations".

List of Screens (CV/LAN)

A list of the system administration screens appears below. This list depicts the screen hierarchy that will appear if only CV/ LAN is installed.

Main Menu (CV/LAN) page 5-3

Login/Password Administration page 5-4

- Add Logins page 5-6
- Change Passwords page 5-8

TCP/IP Administration page 5-10

- This Host page 5-11
- Local Host Table page 5-13
  - Add Host page 5-15
- Network Routing Information page 5-17
  - Network Routing Daemon page 5-18
  - Default Gateway page 5-19
  - Network Routing Table page 5-21
    - Add Routes page 5-23

CV/LAN Administration page 5-25

- Clients for Node ID signalXX page 5-27

Add Client page 5-29

Assign Port for Node ID signalXX page 5-30

Maintenance page 5-31

Removable Media Operations page 5-32

Set System Time and Date page 5-33

Reset System (CV/LAN) page 5-36

System Logs page 5-38

Security Logs page 5-39

Login Attempt Log page 5-40

Client Access Logs page 5-41

System Reset Log page 5-42

Command Logs page 5-43

Diagnostics page 5-44

Ping Host page 5-45

Hardware Alarms page 5-46

Hardware Status page 5-47

Application Components page 5-48

CV/LAN Utilities page 5-49

ASAI Test page 5-50

ASAI Trace page 5-51

ISDN Trace page 5-52

ISDN Alarm page 5-53

CV/LAN Port Status/Control page 5-54

Message Collection Period page 5-57

Field Names and Descriptions

Main Menu (CV/LAN)

```
                                  Main Menu

 1. Login/Password Administration

 2. TCP/IP Administration...

 3. CV/LAN Administration

 4. Maintenance...

 5. CV/LAN Port Status/Control

 6. Exit



This line is used to provide abbreviated help on the currently selected field.

  EXIT   REFRESH   ENTER                    HELP
```

Screen 5-1. Main Menu (CV/LAN)

Login/Password Administration

NOTE:
Only the primary administrator using login = `asai_adm` is allowed to add or delete logins. (The [ADD] and [DELETE] keys only appear for the primary administrator login.) Also, only the `asai_adm` login can be used to change a password for any login.

```
                    Login/Password Administration

              Login                Login                Login
        ________________     ________________     ________________
        ________________     ________________     ________________
        ________________     ________________     ________________
        ________________     ________________     ________________
        ________________     ________________     ________________
        ________________     ________________     ________________
        ________________     ________________     ________________
        ________________     ________________     ________________
        ________________     ________________     ________________
        ________________     ________________     ________________
        ________________     ________________     ________________
        ________________     ________________     ________________
        ________________     ________________     ________________
        ________________     ________________     ________________
        ________________     ________________     ________________
        ________________     ________________     ________________

This line is used to provide abbreviated help on the currently selected field.

 CANCEL  REFRESH  ADD  DELETE        HELP  CHGPW
```

Screen 5-2. Login/Password Administration

This screen is used to view and delete logins. It also provides access to the **Add Logins** and **Change Passwords** screens. Logins are listed in alphabetical order. A maximum of 45 logins may be administered.

Field Name	Description
Login	Lists all administered logins. Maximum login length is 15 characters.

Use this screen as follows:

- To delete a login:
  1. Press TAB or use the arrow keys to move to the login you want to delete, and then press DELETE.
  2. The following prompt appears: **`Are you sure? (Y/N).`** Type Y and press RETURN. The screen reappears, minus the deleted login.

     If you type N and press RETURN the cursor reappears at the beginning of the line, and the login is not deleted.
  3. Repeat steps 1 and 2 until you have deleted all desired logins. Then press EXIT and the Main Menu reappears.
- To change a login's password, press CHGPW to access the screen for changing passwords.
- To add a login, press ADD to access the **Add Logins** screen.

Add Logins

NOTE:
Only the primary administrator using the `asai_adm` login is allowed to add logins and passwords.

NOTE:
If the primary administrator attempts to add a login that already exists, an error message is displayed.

```
                    Login/Password Administration
                              Add Logins



                         Login: _____________



This line is used to provide abbreviated help on the currently selected field.

  CANCEL   REFRESH   ENTER   CLEAR        HELP
```

Screen 5-3. Add Logins

When you add a login using this screen, after you press the ENTER function key the previous screen reappears with the cursor positioned at the beginning of the new entry.

Field Name	Description
Login	The login to be added. Maximum length is 15 characters.

Use this screen as follows:

1. Type the login you want to add to the system.
2. Press (ENTER) to submit the login.
3. The following prompt appears: **`New password:`**

   Type the password to be associated with the login and press (RETURN).

   Passwords follow normal UNIX® naming conventions. These are:

   - Each password must have at least 6 characters.
   - Each password must contain at least two alphabetic characters and at least 1 numeric or special character. “Alphabetic” includes all uppercase and lowercase letters.
   - Each password must differ from the user’s login name and any reverse or circular shift of that login name. (Corresponding uppercase and lowercase letters are considered equivalent.)
   - A new password must differ from the old one by at least three characters.

   NOTE:
   The `asai_adm` login that the primary administrator uses is not bound by these conventions when making up passwords.

4. The following prompt appears: **`Re-enter password:`**

   Re-enter the password at the prompt and press (RETURN) again. If you entered the password the same way both times, the password is added and the **Login/Password Administration** screen reappears. Repeat this procedure for each login and password you want to add.

Change Passwords

NOTE:
Any user may change his or her password. However, the primary administrator uses the `asai_adm` login to change any user's password.

```
Type Old Password
Type New Password
Re-Type New Password
```

Screen 5-4. Change Passwords

This screen is used to change user passwords. Passwords should be hard to guess and should not contain the following:

- all the same characters (for example, 1111, xxxx)
- sequential characters (for example, 1234, abcd)
- character strings that can be associated with you or your business, such as your name, birthday, business name, phone number, or social security number
- actual words and commonly-used names

Passwords should use as great a variety of characters as possible. For example, if both numbers and letters are permitted, the password should contain both. Passwords should be changed regularly, at least on a quarterly basis. Recycling old passwords is not recommended.

Field Name	Description
Old Password	The existing password. It appears on the screen only for logins other than the primary administrator.
New Password	The password you want to change the existing password to.

Use this screen as follows:

1. Logins other than the primary administrator:

   Type the old password and press RETURN. If you entered it correctly, the following prompt appears: **`New Password`**

2. All logins:

   Type the new password and press RETURN.

   The following prompt appears: **`Re-Type New Password`**

3. Re-type the new password and press RETURN**.**

   If you entered the new password the same way both times, the password is changed. The screen you were on previously (**`Login/Password Administration`**) reappears.

TCP/IP Administration

```
                          TCP/IP Administration

1. This Host
2. Local Host Table
3. Networking Routing Information...
4. Exit









This line is used to provide abbreviated help on the currently selected field.

  EXIT   REFRESH   ENTER                    HELP
```

Screen 5-5. TCP/IP Administration

Menu Item	Description
This Host	Provides access to data identifying this circuit pack on the network, including machine's host name, IP address, and subnet mask.
Local Host Table	Provides access to screens for viewing, adding, or deleting all **locally** known client hosts.
Network Routing Information...	Provides access to Network Routing Information, including state of the network routing daemon, default gateway data, and other network routes. Accesses screens for viewing, deleting, or adding information.
Exit	Returns you to previous menu.

To use this menu, select the number of the task you wish to perform. (Press the number, or press TAB or use the arrow keys to move the cursor to the desired number, and press ENTER.)

This Host

```
                    TCP/IP Administration
                          This Host

          Host Name:        ______________________________

          Host IP Address:  __________________

          Subnet Mask:      __________________



This line is used to provide abbreviated help on the currently selected field.

 CANCEL  REFRESH  ENTER  CLEAR        HELP
```

Screen 5-6. This Host

This screen is used to assign a host name to the MAPD Board. The name must be unique in the domain to which the board is attached.

NOTE:
For changes to be implemented, you must reboot the system. See the Screens, "Reset System (CV/LAN)" and in this chapter.

Field Name	Description	R[1]
Host Name	Host name of this circuit pack. **Default = definity.** Maximum field size = 20 characters.	R
Host IP Address	IP address of this circuit pack. **Default = 192.168.25.10** Maximum field size = 15 characters.	R
Subnet Mask	Subnet Mask used by this circuit pack. **Change only if alternate network subnetting is desired**. Value = x.x.x.x, where x is a number between 0 and 255, depending on first 2 digits of Host IP address. **Default = blank**. Maximum field size = 15 characters.	O

1. R = Required field

Use this screen as follows:

1. Type the host name, IP address, and, optionally, the subnet mask. Press [TAB] or use the arrow keys to move from field to field.

   (If you want to clear the Subnet Mask, move to that field, press [CLEAR] and then press [ENTER].)

2. Press [CANCEL] if you decide not to enter the data, or, when you have finished typing data, press [ENTER] to submit the host data. The **TCP/IP Administration** menu reappears.

Local Host Table

```
                          TCP/IP Administration                    Page
                           Local Host Table                      X of X

  IP Address        Host Name                   Aliases

  _______________   ___________________________ ________________________________
  _______________   ___________________________ ________________________________
  _______________   ___________________________ ________________________________
  _______________   ___________________________ ________________________________
  _______________   ___________________________ ________________________________
  _______________   ___________________________ ________________________________
  _______________   ___________________________ ________________________________
  _______________   ___________________________ ________________________________
  _______________   ___________________________ ________________________________
  _______________   ___________________________ ________________________________
  _______________   ___________________________ ________________________________
  _______________   ___________________________ ________________________________
  _______________   ___________________________ ________________________________
  _______________   ___________________________ ________________________________

This line is used to provide abbreviated help on the currently selected field.

  CANCEL   REFRESH   ADD   DELETE        HELP        NXTPG   PRVPG
```

Screen 5-7. Local Host Table

This screen is used to resolve host names. Each locally known host appears on this screen in alphabetical order by host name. A maximum of 84 local hosts may be administered. Defaults or preadministered entries may appear when the screen is first accessed. Users can add or change entries.

Field Name	Description
IP Address	IP address of locally known host. Maximum field size = 15 characters.
Host Name	Name of locally known host. Several defaults are provided. Maximum field size = 20 characters.
Aliases	Additional names associated with this host. Maximum field size = 35 characters. Multiple aliases are separated by spaces. Entries starting with a “#” sign are comments. A “#” may be placed anywhere in the field, but anything following the “#” is considered a comment and ignored.

Use this screen as follows:

- Press NXTPG or PRVPG to access other hosts.
- To delete a host entry:
  1. Press TAB or use the arrow keys to move the cursor to the line you want to delete, and then press DELETE**.**
  2. The following prompt appears: **`Are you sure? (Y/N)`**. Type Y and press RETURN. When the screen reappears, the host is removed.
- To add a host, press ADD to access the **Add Host** screen.

Local Host Table — Add Host

```
                          TCP/IP Administration
                             Local Host Table
                                 Add Host

IP Address          Host Name                    Aliases
_______________     ________________________     ______________________________



This line is used to provide abbreviated help on the currently selected field.
  CANCEL   REFRESH   ENTER   CLEAR        HELP
```

Screen 5-8. Add Host

This screen is used to add hosts. When you add a host using this screen, after you press the ENTER function key, the previous screen reappears with the cursor positioned at the beginning of the new entry.

Field Name	Description
IP Address	IP address of locally known host. Maximum field size = 15 characters.
Host Name	Name of locally known host. Maximum field size = 20 characters.
Aliases	Additional names associated with this host. Maximum field size = 35 characters. Multiple aliases are separated by spaces. Entries starting with a “#” sign are comments. A “#” may be placed anywhere in the filed, but anything following the “#” is considered a comment and ignored.

Use this screen as follows:

1. Type the IP address, host name, and any aliases. Type all aliases on one line, but leave a space between each alias.
2. Press the ENTER function key to submit the data.
3. Access the **Add Hosts** screen again and repeat Steps 1 and 2 for each new host to be added.

Network Routing Information

```
                          TCP/IP Administration
                       Network Routing Information

1.  Network Routing Daemon

2.  Default Gateway

3.  Network Routing Table

4.  Exit









This line is used to provide abbreviated help on the currently selected field.

  EXIT   REFRESH   ENTER                    HELP
```

Screen 5-9. Network Routing Information

Menu Item	Description
Network Routing Daemon	Allows the user to enable or disable the automatic network routing daemon.
Default Gateway	Allows the user to administer a default gateway.
Network Routing Table	Provides access to all information about other network routes.
Exit	Redisplays the TCP/IP Administration menu.

To use this menu, select the number of the task you wish to perform. (Press the number, or press TAB or use the arrow keys to move the cursor to the desired number, and press ENTER.)

Network Routing Information — Network Routing Daemon

```
                    TCP/IP Administration
                Network Routing Information
                  Network Routing Daemon


            Network routing daemon state: ___









This line is used to provide abbreviated help on the currently selected field.
 CANCEL  REFRESH                    HELP  STATE
```

Screen 5-10. Network Routing Daemon

This screen is used to view and change the state of the network routing daemon. The `Network routing daemon state` field is filled in when the screen first appears.

Field Name	Description
Network routing daemon state	Either `on` or `off`. When on, the network routing daemon can automatically find routes to other networks. **Default = on**.

Use this screen as follows:

- If you do not want to change the network routing daemon state, press CANCEL to exit the screen.
- If you want to change the network routing daemon state, press STATE to change the state.

  The following prompt appears: **`Are you sure? (Y/N)`**. Type `Y` and press RETURN**.** The screen reappears with the new state displayed.

  If you type `N` and press RETURN**,** the state is not changed.
- When the desired state is displayed, press CANCEL**.** The **Network Routing Information** menu reappears.

Network Routing Information — Default Gateway

```
                    TCP/IP Administration
                Network Routing Information
                      Default Gateway

     Name or IP Address: ______________________________      Status: _____



This line is used to provide abbreviated help on the currently selected field.

  CANCEL   REFRESH   ENTER   CLEAR        HELP
```

Screen 5-11. Default Gateway

A default gateway allows the MAPD to communicate with other hosts in other LANs. The Default Gateway screen is used to:

1. Initially identify the default gateway to the MAPD;
2. Change the Name or IP Address and check the Status, or;
3. Verify that the MAPD board is not communicating with another host because the Status of the Default Gateway is “down.”

This screen is protected against multiple users making simultaneous changes as follows:

- If a user presses ENTER**,** the system checks to see if the information that was displayed upon entry to this screen has changed.
- If it has, the data is not entered and the user is apprised of the problem and exited from the screen. The previous screen (**TCP/IP Administration**) reappears.

Field Name	Description
Name or IP Address	Name or IP Address of the default gateway, the machine used to route all traffic destined for other networks, for which a specific route is not known. Maximum field size = 20 characters.
Status	Either up or down. If down, the gateway is not willing to route traffic for the MAPD.

Use this screen as follows:

- To enter data the first time, or to change data:
  1. Type the name or IP Address of the gateway to be added.
  2. Press CANCEL if you do not want to add the Name or IP Address you typed, or press ENTER to submit the name or IP address.

     The TCP/IP Administration — Network Routing Information menu reappears. The next time the **`Default Gateway`** screen is displayed, the data that was entered or changed will be filled in.
- To remove the default gateway that appears in the field, press CLEAR and then ENTER.
- If you are only viewing the screen, press CANCEL to return to the **TCP/IP Administration — Network Routing Information** menu.

Network Routing Information — Network Routing Table

```
                          TCP/IP Administration                    Page
                     Network Routing Information                 x of x
                        Network Routing Table

     Destination                 Type       Gateway                     Status

   ___________________________  _________  ___________________________  ______
   ___________________________  _________  ___________________________  ______
   ___________________________  _________  ___________________________  ______
   ___________________________  _________  ___________________________  ______
   ___________________________  _________  ___________________________  ______
   ___________________________  _________  ___________________________  ______
   ___________________________  _________  ___________________________  ______
   ___________________________  _________  ___________________________  ______
   ___________________________  _________  ___________________________  ______
   ___________________________  _________  ___________________________  ______
   ___________________________  _________  ___________________________  ______
   ___________________________  _________  ___________________________  ______
   ___________________________  _________  ___________________________  ______

This line is used to provide abbreviated help on the currently selected field.

 CANCEL   REFRESH   ADD   DELETE        HELP        NXTPG   PRVPG
```

Screen 5-12. Network Routing Table

This screen has two uses.

1. If automatic routing is not enabled (see the Screen, "Network Routing Daemon,") users can administer the set of network routes.
2. If automatic routing is enabled, it displays the current set of network routes provided by the Network Routing Daemon.

Routes appear on this screen in numerical order by IP address. A maximum of 65 routes may be administered.

NOTE:
If the routing daemon is enabled, the ADD and DELETE keys do not appear on this screen.

Field Name	Description
Destination	Name or IP address of a host, or a partial IP address of a network. Maximum field size = 20 characters.
Type	The type of destination, either `host` or `network`. (Most routes are to network destinations.)
Gateway	Name or IP address of the gateway, the machine used to route all traffic to the given destination. Maximum field size = 20 characters.
Status	Either `up` or `down`. If `down`, the gateway is not willing to route any traffic.

Use this screen as follows:

- Use [NXTPG] and [PRVPG] to step through the pages.
- To delete route entries:
  1. Press [TAB] or use the arrow keys to move the cursor to the line you want to delete, and then press [DELETE]**.** (This deletes the entire line.)
  2. The following prompt appears: **`Are you sure? (Y/N).`** Type `Y` and press [RETURN]**.**

     If you type `N` and press [RETURN], the cursor reappears at the beginning of the line and the line is not deleted.
  3. Repeat steps 1 and 2 until you have deleted all desired routes. Then press [CANCEL] and the **Network Routing Information** menu reappears.
- To add routes, press [ADD] to access the **Add Routes** screen.

Network Routing Table — Add Routes

```
                          TCP/IP Administration
                       Network Routing Information
                          Network Routing Table
                                Add Routes

     Destination                        Type      Gateway
     ____________________________      _______    ____________________________


This line is used to provide abbreviated help on the currently selected field.

   CANCEL   REFRESH   ENTER   CLEAR          HELP
```

Screen 5-13. Add Routes

This screen is used to add network routes. A maximum of 65 routes may be added.

When you add a route, after you press the ENTER function key, the previous screen reappears with the cursor positioned at the beginning of the new entry.

Field Name	Description
Destination	Name or IP address of a host, or a partial IP address of a network. Maximum field size = 20 characters.
Type	The type of destination, either `host` or `network`. (Most routes are to network destination.)
Gateway	Name or IP address of the gateway, the machine used to route all traffic to the given destination. Maximum field size = 20 characters.

Use this screen as follows:

1. Type the destination, type, and gateway of the route to be added. Press TAB or use the arrow keys to move from field to field.
2. Press CANCEL if you do not want to add what you just typed, or press ENTER to enter the data. The **Network Routing Information — Network Routing Table** screen reappears.
3. Access this screen again and repeat Steps 1 and 2 for each new route to be added.

CV/LAN Administration

```
                              CV/LAN Administration

                 Node ID   Port   Heartbeat State   Number of Clients


                signal01   __        ____                ____
                signal02   __        ____                ____
                signal03   __        ____                ____
                signal04   __        ____                ____
                signal05   __        ____                ____
                signal06   __        ____                ____
                ‌signal07   __        ____                ____
                signal08   __        ____                ____





This line is used to provide abbreviated help on the currently selected field.

  CANCEL   REFRESH                          HELP   STATE   CLIENT   PORT
```

Screen 5-14. CV/LAN Administration

Field Name	Description
Node ID	**Read-only**. Node ID used by CV/LAN clients.
Port	Port number used on the DEFINITY system. Valid range is 1 to 12. Each port can only be assigned once.
Heartbeat State	The state of the ASAI heartbeat sever for this node ID. Either ASAI **on** or **off**.
Number of Clients	The number of clients administered to use this node ID.

Use this screen as follows:

- To change the heartbeat state of a node ID:
  1. Press TAB or use the arrow keys to move the cursor to the line you want to change, and then press STATE**.**
  2. The following prompt appears: **`Are you sure? (Y/N)`**. Type `Y` and press RETURN.

     If you type `N` and press RETURN, the cursor reappears at the beginning of the line and the state is not changed.

3. Repeat Steps 1 and 2 until you have changed the heartbeat state for all the desired node IDs. Then press CANCEL and the previous screen will appear.

- To view or modify the list of clients using a node ID, press TAB or use the arrow keys to move the cursor to the line you want to view or modify, and then press CLIENT. You will then be placed into the **CV/LAN Administration — Assign Port for Node ID signalXX** screen.
- To modify the port number for a node ID, press TAB or use the arrow keys to move the cursor to the line you want to modify, and then press PORT. You will then be placed into the **CV/LAN Administration — Assign Port for Node ID signalXX** screen.

CV/LAN Administration — Clients for Node ID signalXX

```
                          CV/LAN Administration                    Page
                     Clients for Node ID signalXX                 X of X

Client Name or IP Address    Status      Client Name or IP Address    Status
__________________________  __________   __________________________  __________
__________________________  __________   __________________________  __________
__________________________  __________   __________________________  __________
__________________________  __________   __________________________  __________
__________________________  __________   __________________________  __________
__________________________  __________   __________________________  __________
__________________________  __________   __________________________  __________
__________________________  __________   __________________________  __________
__________________________  __________   __________________________  __________
__________________________  __________   __________________________  __________
__________________________  __________   __________________________  __________
__________________________  __________   __________________________  __________
__________________________  __________   __________________________  __________
__________________________  __________   __________________________  __________
__________________________  __________   __________________________  __________

This line is used to provide abbreviated help on the currently selected field.
 CANCEL   REFRESH   ADD   DELETE        HELP        UPDATE   DROP
```

Screen 5-15. Clients for Node ID signalXX

This screen is used to associate CV/LAN clients with ASAI ports on the DEFINITY system. It allows the user to add up to 60 entries per port.

Field Name	Description
signalXX	**Read-only**. Node ID number used by CV/LAN clients.
Client Name or IP Address	Host name or IP address of the client machine authorized to connect to this port. (Network name of the adjunct.) Must be resolvable by the local host table, or be an IP address. Maximum field size = 20 characters.
Status	**Read-only**. Either **`in use`** or **`idle`**. Idle client states may be modified or deleted. If you attempt to delete a client which is in use, the connection to that client will be disconnected.

Use this screen as follows:

- To drop the connection to a client:
  1. Press TAB or use the arrow keys to move the cursor to the entry whose connection you want to drop, and then press DROP.

2. The following prompt appears: **`Are you sure? (Y/N)`**. Type Y and press [RETURN].

   If you type `N` the cursor reappears where it was and the connection is not dropped.

3. Repeat Steps 1 and 2 until you have dropped all desired connections. Then press [CANCEL] and the previous screen will appear.

- To delete a client:

  1. Press [TAB] or use the arrow keys to move the cursor to the entry of the client you want to delete, and then press [DELETE].
  2. The following prompt appears: **`Are you sure? (Y/N)`**. Type Y and press[RETURN]**.**

     If you type `N` the cursor reappears where it was and the client is not deleted.
  3. Repeat Steps 1 and 2 until you have dropped all desired clients. Then press [CANCEL] and the previous screen will appear.

- To add a client, press [ADD] to get to the **CV/LAN Administration — Add Client** screen.

Clients for Node ID signalXX — Add Client

```
                    CV/LAN Administration
              Clients For Node ID signalXX
                       Add Clients


                Client Name or IP Address
                _________________________


This line is used to provide abbreviated help on the currently selected field.

 CANCEL  REFRESH  ENTER  CLEAR        HELP
```

Screen 5-16. Add Client

This screen is used to add CV/LAN clients for a specific node ID. A maximum of 60 clients may be administered.

Field Name	Description
signalXX	**Read-Only**. Node ID number used by CV/LAN clients.
Client Name or IP Address	Host name or IP address of the client machine authorized to connect to this port. (Network name of the adjunct.) Must be resolvable by the local host table, or by an IP address. Maximum field size = 20 characters.

Use this screen as follows:

1. Type the client name or IP address you want to add.
2. Press CANCEL if you do not want to add what you just typed, or press ENTER to submit the data. The previous screen will appear.
3. Access the Add Client screen again and repeat Steps 1 and 2 for each client to be added.

CV/LAN Administration — Assign Port for Node ID signalXX

```
                    CV/LAN Administration
              Assign Port For Node ID signalXX

                Currently Assigned to Port __

                       Available Ports
                        00 (unassign)
                         __
                         __
                         __
                         __
                         __
                         __
                         __
                         __
                         __
                         __
                         __
                         __

This line is used to provide abbreviated help on the currently selected field.

 CANCEL  REFRESH                    HELP                  ASSIGN
```

Screen 5-17. Assign Port for Node ID signalXX

This screen is used to assign a DEFINITY system virtual BRI port number to a node ID number. Only port numbers which are assigned to the CV/LAN application and are not assigned to other node ID numbers, will appear in the list.

Field Name	Description
signalXX	**Read-only**. Node ID number used by CV/LAN clients.
Available Ports	Port number used on the DEFINITY system. Valid range is 1 to 12.

Use this screen as follows:

1. Press TAB or use the arrow keys to move the cursor to the port number you want to assign (port 00 is used to unassign the node ID), and then press ASSIGN.
2. The following prompt appears: **`Are you sure? (Y/N)`**. Type Y and press RETURN.

   If you type N the cursor reappears where it was and the port number is not changed.
3. Then press CANCEL and the previous screen will appear.

Maintenance

```
                                Maintenance

 1.  Removable Media Operations...

 2.  Set System Time and Date

 3.  Reset System...

 4.  System Logs

 5.  Security Logs...

 6.  Diagnostics...

 7.  Application Components

 8.  CV/LAN Utilities...

 9.  Exit
This line is used to provide abbreviated help on the currently selected field.

  CANCEL   REFRESH   ENTER                    HELP
```

Screen 5-18. Maintenance

Menu Item	Description
Removable Media Operations...	Provides access to the Removable Media Operations menu.
Set System Time and Date	Allows the user to set system time and date, including time zone.
Reset System...	Provides access to the Reset System menu.
System Logs	Provides access to System Logs.
Security Logs...	Provides access to Security Logs menu.
Diagnostics...	Provides access to the Diagnostics Menu.
Application Components	Provides access to identification information about each application.
CV/LAN Utilities	Provides access to a variety of CV/LAN utilities.
Exit	Returns the user to previous screen.

To use this menu, press the number of the screen you wish to access, or press TAB or use the arrow keys to move the cursor to the desired number, and press ENTER.

Removable Media Operations

```
                                Maintenance
                        Removable Media Operations

 1.  Format Removable Media

 2.  Save Configuration Data To Removable Media

 3.  Restore Configuration Data From Removable Media

 4.  Exit





This line is used to provide abbreviated help on the currently selected field.

  CANCEL   REFRESH   ENTER                    HELP
```

Screen 5-19. Removable Media Operations

Menu Item	Description
Format Removable Media	Instructs the system to format the removable media.
Save Configuration Data to Removable Media	Instructs the system to start a backup of all its configuration data.
Restore Configuration Data From Removable Media	Begins restoring configuration data from removable media. **The system must be rebooted after performing a restore.**
Exit	Returns you to previous screen.

Use this screen as follows:

1. Select the activity you want to perform. Press the corresponding number, or press TAB or use the arrow keys and press ENTER**.**
2. For each activity, the following prompt appears: **`Are you sure? (Y/N)`**. Type `Y` and press RETURN**.** The activity is shown on the screen in real time.

   If you type `N` and press RETURN, this screen reappears.
3. After the activity you select is completed, the **Maintenance** menu reappears.

Set System Time and Date

```
                                Maintenance
                          Set System Time and Date


            Time: __:__              Month: __      Day: __     Year: ____

                         Standard Timezone Information
                           ST Name:         __________
                           Offset Time:     __:__
                           Direction (E/W): _

                         Daylight Savings Timezone Information
                           DST Name:       ___________




This line is used to provide abbreviated help on the currently selected field.

  CANCEL   REFRESH   ENTER   CLEAR          HELP
```

Screen 5-20. Set System Time and Date

This screen is used to set the system time, date, and time zone. Setting a second time zone is optional.

Field Name	Description
Time	Hours and minutes (xx:xx), plus a time zone name up to 10 characters (for example, EDT). The time zone to the right of the time field is the time zone currently in use and is display-only.
Month	Two digits (01-12)
Day	Two digits (01-31)
Year	Four digits (xxxx)
Standard Timezone Information Name:	The name or abbreviation of the standard time zone for your location. A list of standard abbreviations follows this table.

Field Name	Description
Offset Time:	The number of hours that vary from Universal Time (also known as Greenwich Mean Time). See Standard Time Zone.
Direction (E/W)	The direction your location is from the Universal Time zone, east (E) or west (W).
Daylight Savings Timezone Information Name	The name or abbreviation of a second, optional time zone. A list of standard abbreviations follows this table. If you enter any value, this time zone follows U.S. Daylight Savings rules. In the U.S., Daylight Savings begins on the first Sunday of April at 2 a.m. Standard Time begins on the last Sunday of October at 2 a.m. If this field is blank, then Daylight Savings does not apply.

Standard Time Zone Name	Standard Time Zone Abbreviation	Daylight Savings Abbreviation	Offset Time	(Offset) Direction
Greenwich	GMT	GDT	00:00	W
Atlantic	AST	ADT	04:00	W
Eastern	EST	EDT	05:00	W
Central	CST	CDT	06:00	W
Mountain	MST	MDT	07:00	W
Pacific	PST	PDT	08:00	W
Yukon	YST	YDT	08:00	W
Alaska	none (use full name)	none (use full name)	10:00	W
Hawaii	HST	HDT	10:00	W
Beijing	BST	BDT	11:00	W

To use this screen:

1. On the top line, type the time, month, day, and year. Press TAB or use the arrow keys to move from field to field.
2. Under **`Standard Timezone Information,`** type the name or abbreviation in the **`name`** field, the offset time, and the direction, as follows:
   - If you enter a name or abbreviation from the list in this section, then you do not have to enter offset time or direction.
   - If you leave this field blank, or if you clear the offset time or direction, they are supplied automatically from the preceding table.

- If you enter a name or abbreviation that is **not** in the table, then you must also enter offset time and direction.

  NOTE:
  The system determines the time zone that appears to the right of the **`Time`** field in the top line of the screen according to what is entered in these fields and the current date and time.

3. If you do not want to enter a second time zone, be sure **`DST Name`** is clear and then skip to Step 4.

   If you do want to enter a second time zone that follows U.S. Daylight Savings rules, under **`Daylight Savings Timezone Information`**, type the name or abbreviation in the Name field as you did in Step 2. However, note the following conventions for this field:

   - If you type **any** value in this field, then you are setting an alternate timezone that follows U.S. Daylight Savings rules.
   - If you want a second time zone but do not want U.S. Daylight Savings rules to apply, then make sure the field is blank and manually change the system clock on the appropriate date.

4. Press ENTER when you are done typing data. The **Maintenance** menu reappears.

Reset System (CV/LAN)

```
                                Maintenance
                               Reset System

 1.  Shutdown

 2.  Reboot System

 3.  Restart CV/LAN

 4.  Exit









This line is used to provide abbreviated help on the currently selected field.

  CANCEL   REFRESH   ENTER                    HELP
```

Screen 5-21. Reset System (CV/LAN)

Menu Item	Description
Shutdown	Shuts down the entire system. **Required before powering down the system or removing system assembly.**
Reboot System	Reinitializes all hardware and software on the system assembly.
Restart CV/LAN	Reintializes the CallVisor PC CV/LAN Application**.**
Exit	Returns you to previous menu.

Use this screen as follows:

1. Select the activity you want to perform. Press the number or press (TAB) or use the arrow keys and press (ENTER)**.**
2. The following prompt appears: **`Are you sure? (Y/N)`**. Type Y and press (RETURN)**.**

   If you type N and press (RETURN), this screen reappears.
3. For **`Shutdown`**:

   It is advisable to run this from the system console.

4. For **`Reboot System`**:

   The screen displays messages during the reboot. If you run this from the system console, the login prompt will appear when the procedure is complete. From a remote connection, you have to reconnect later (approximately 5 to 10 minutes).

5. For **`Restart CV/LAN`**:

   The application will be restarted. This may be done from either the system console or a remote connection.

System Logs

```
      <Date>                        Maintenance                  Page XXXX of XXXX
                                    System Logs
Time     Type     Process    Description
_______  ______   ________   ____________________________________________________



This line is used to provide abbreviated help on the currently selected field.
  CANCEL   REFRESH   NXTDAY   PRVDAY        HELP      NXTPG   PRVPG
```

Screen 5-22. System Logs

This screen displays up-to-the-minute information on system activity, including errors.

Field Name	Description
Date	Month, day and year (MM/DD/YYYY) changes as you move among dates. If an asterisk (*) follows the day, this indicates an overflow log for this date. This second log should be considered a separate day when moving through days.
Time	Time of the log entry (Hour:Minutes:Seconds)
Type	Severity of the log entry (**FYI, WARNING,** or **CRITICAL**)
Process	The process that created the log entry. Examples are **oam_ui** and **Brouter**.
Description	Description of the log entry

To use this screen, press NXTDAY and PRVDAY to move among days. Press NXTPG and PRVPG to step through multiple pages.

Security Logs

```
                                Maintenance
                               Security Logs

 1.  Login Attempt Log

 2.  Client Access Logs

 3.  System Reset Log

 4.  Command Logs

 5.  Exit





This line is used to provide abbreviated help on the currently selected field.

  CANCEL   REFRESH   ENTER                    HELP
```

Screen 5-23. Security Logs

Menu Item	Description
Login Attempt Log	Lists login attempts that failed after 5 or more attempts.
Client Access Logs	Provide access to all client connection attempts.
System Reset Log	Provides access to all system boot records.
Command Logs	List all commands executed from administration/maintenance screens, such as adding a new login. List all changes to parameters.

Use this screen as follows:

1. Select the item for which you would like to see the information. Press the number, or press TAB or use the arrow keys and press ENTER**.** The applicable screen appears.
2. When you are done viewing data, press Exit to return to the **Maintenance** menu.

Security Logs — Login Attempt Log

```
                                Maintenance                    Page X of X
                                System Logs
                             Login Attempt Log

Date and Time        User              Terminal Port

CANCEL  REFRESH                   HELP            NXTPG   PRVPG
```

Screen 5-24. Login Attempt Log

Field Name	Description
Date and Time	Date and time of the invalid login attempt.
User	Login of the user who attempted to log in. After five failed login attempts occur, all are logged. If fewer than five are attempted, then none is logged.
Terminal Port	MAPD port through which the login attempt was made.

To view information on this screen, press NXTPG and PRVPG to step through multiple pages.

Security Logs — Client Access Log

```
<Date>                          Maintenance                  Page XXXX of XXXX
                              Security Logs
                            Client Access Logs
Time     Type      Process  Description
_______  ________  _______  ____________________________________________________

This line is used to provide abbreviated help on the currently selected field.
 CANCEL  REFRESH  NXTDAY  PRVDAY        HELP        NXTPG  PRVPG
```

Screen 5-25. Client Access Log

Field Name	Description
Date	Month, day, and year (MM/DD/YYYY) changes as you move among dates. If an asterisk (*) follows the day, this indicates an overflow log for this date. This second log should be considered a separate day when moving through days.
Time	Time of the client access (Hour:Minutes:Seconds).
Type	Severity Indicator (**FYI, WARNING**, or **CRITICAL**).
Process	Process that created the log entry. Examples are `brouter` and **oam_ui**.
Description	Description of the client access activity. Example: **client/3520 TCP_Connect**.

To use this screen, press NXTDAY and PRVDAY to move among days. Press NXTPG and, PRVPG to step through multiple pages.

Security Logs — System Reset Log

```
                          Maintenance                    Page XXXX of XXXX
                         Security Logs
                       System Reset Log

Time      Date          Description
____      ________      ____________________________________________________

CANCEL  REFRESH  [     ]  [     ]        HELP  [     ]  NXTPG  PRVPG
```

Screen 5-26. System Reset Log

Field Name	Description
Time	Time of the reset (Hour:Minutes:Seconds).
Date	Date of the reset (MM/DD/YY).
Description	Description of the reset (system boot).

To use this screen, press NXTPG and PRVPG to step through multiple pages.

Security Logs — Command Log

```
     <Date>                        Maintenance                    Page XXXX of XXXX
                                   Security Logs
                                    Command Logs
 Time       User            Description
 _____      _____           ________________________________________________________

 This line is used to provide abbreviated help on the currently selected field.
   CANCEL   REFRESH   NXTDAY   PRVDAY          HELP        NXTPG    PRVPG
```

Screen 5-27. Command Log

Field Name	Description
Date	Month, day, and year (MM/DD/YYYY) changes as you move among dates. If an asterisk (*) follows the day, this indicates an overflow log for this date. This second log should be considered a separate day when moving through days.
Time	Time of the client access (Hour:Minutes:Seconds).
User	The login_id of the user executing the command.
Description	Description of the command that was executed. **Example: delete: route: 135.20.87 network asaimfb**

This screen displays up-to-the-minute data for the current day. Most recent data is displayed first.

To use this screen, press NXTDAY and PRVDAY keys to move among days. Press NXTPG and PRVPG to step through multiple pages.

Diagnostics

```
                                   Maintenance
                                   Diagnostics

 1.  Ping Host

 2.  Hardware Alarms

 3.  Hardware Status

 4.  Exit









This line is used to provide abbreviated help on the currently selected field.

  CANCEL   REFRESH   ENTER                    HELP
```

Screen 5-28. Diagnostics

This screen allows the user to test connections and check alarms and status for hardware.

Menu Item	Description
Ping Host	Provides access to the Ping Host Screen.
Hardware Alarms	Displays hardware alarms.
Hardware Status	Displays hardware status.
Exit	Returns you to the previous menu.

Use this screen as follows:

1. Select the item for which you would like to see the information. Press the number, or press TAB or use the arrow keys and press ENTER. The applicable screen appears.
2. When you are done viewing data, press EXIT to return to the **Maintenance** menu.

Diagnostics — Ping Host

```
                                Maintenance
                                Diagnostics
                                 Ping Host


                    Host Name or IP Address: ____________________
                    Packet count:            ___
                    Packet size:             ___









This line is used to provide abbreviated help on the currently selected field.

  CANCEL   REFRESH   ENTER   CLEAR        HELP
```

Screen 5-29. Ping Host

This screen allows the user to test the connection between the MAPD and any host.

Field Name	Description
Host Name or IP Address	Name or IP address of the host you are trying to ping. Maximum field size = 20 characters.
Packet Count	The number of packets sent between the MAPD and the host. Valid range is 1-999. **Default = 1**.
Packet Size	The size of the packets sent between the MAPD and the host. Valid range is 64-999. **Default = 64**

Use this screen as follows:

1. Type the host name, IP Address, packet count, and packet size. Use TAB or the arrow keys to move from field to field.
2. When you are done entering data, press ENTER to enter the data, or CANCEL to return to the **Maintenance** menu. If you press ENTER, this displays the results and redisplays this screen. (You can do multiple pings.)

Diagnostics — Hardware Alarms

```
The messages which follow are the result of your last request.
At the : prompt press RETURN to view more messages.
At the (EOF): prompt press RETURN to continue.

TN Code/Vintage:
        TN801B   V2
FW Version:
        BOOT=PIFN 20496, FW version 16, Dev_id O, Comp_id 10
        APPL=PIFN 20496, FW version 16, Dev_id O, Comp_id 10
RM Version:
        BOOT=1.0.8(boot)
        APPL=1.0.8

Active: APPL
Alarm Count: 0

(no alarms)





(EOF):
```

Screen 5-30. Hardware Alarms

This is a read-only screen that displays any hardware alarms.

Field Name	Description
TN Code/Vintage	Displays the MAPD (TN801B) board code and vintage as reported by the DEFINITY system.
FW Version	Displays the firmware versions.
RM Version	Displays the remote maintenance firmware versions.
Alarm Count	Displays the number of active alarms followed by a description of each alarm and its severity.

NOTE:
Contact the TSC if there are any alarms or if any of the tests fail.

Use this screen as follows:

- Press RETURN to return to the **Diagnostics** menu.

Diagnostics — Hardware Status

```
TN Code/Vintage:
        TN801B   V1
FW Version:
        BOOT=777        APPL=15000
RM Version:
        BOOT=0.1.444    APPL=0.1.4

Alarm Count: 2
        platform ambient temperature is high [WARNING]
        voltage out of range [MINOR]

Temperatures:
           actual           min             max
Temp1    99.71 deg F    75.00 deg F     104.00 deg F
Temp2    85.53 deg F    75.00 deg F     104.00 deg F

Voltages:
           actual           min             max
+VEE      +12.18V         +11.40V         +12.60V
-VEE      -12.12V         -12.60V         -11.40V
+VCC       +5.11V          +4.75V          +5.25V
-VCC       -5.19V          -5.25V          -4.75V
3.3V       +3.32V          +3.13V          +3.46V

(EOF):
```

Screen 5-31. Hardware Status

This is a read-only screen that displays hardware status.

Field Name	Description
TN Code/Vintage	Displays the MAPD (TN801B) board code and vintage as reported by the DEFINITY system.
FW Version	Displays the firmware version.
RM Version	Displays the remote maintenance firmware version.
RM Version	Displays the remote maintenance firmware version.
Alarm count	Displays the number of active alarms followed by a description of each alarm and its severity.

NOTE:
Contact the TSC if any alarms exist or if any tests fail.

Use this screen as follows:

- Press RETURN to return to the **Diagnostics** menu.

Application Components

```
=========== Application Packages ===========
DLG             DLG application
                (MAPD) Release 2.0, Issue 2.01
brm             BRM driver
                (MAPD) Release 2.0, Issue 2.01
cvasai          AVAYA CALLVISOR PC ASAI
                (MAPD) 6.1.0
cvisdn          AVAYA CALLVISOR PC ISDN
                (MAPD) 6.1.0
cvlansrv        AVAYA CV/LAN SERVER
                (MAPD) 6.1.0
cvmapd          AVAYA CALLVISOR PC OAM
                (MAPD) 6.1.0
klog            MAPD klog driver
                (MAPD) Release 2.0, Issue 2.01
mapd-ae         MAPD Application Environment
                (MAPD) Release 2.0, Issue 2.01

============ Platform Packages =============
angl            ANGEL Driver
                (MAPD) Release 2.0, Issue 2.01
bri             BRI Driver
                (MAPD) Release 2.0, Issue 2.01
:
```

Screen 5-32. Application Components

The above screen shows a sample output screen from the Application Components.

CV/LAN Utilities

```
                                Maintenance
                             CV/LAN Utilities

 1.  ASAI Test

 2.  ASAI Trace

 3.  ISDN Trace

 4.  ISDN Alarm

 5.  Exit





This line is used to provide abbreviated help on the currently selected field.

  EXIT   REFRESH   ENTER                    HELP
```

Screen 5-33. CV/LAN Utilities

Menu Item	Description
ASAI Test	Tests communication with the DEFINITY system for each node ID using ASAI heartbeats.
ASAI Trace	Decodes an ASAI message stream.
ISDN Trace	Traces messages through the kernel protocol stack. Used in debugging.
ISDN Alarm	Activates or deactivates ASAI maintenance alarming on the DEFINITY system.
Exit	Returns you to preceding menu.

To use this menu, select the number of the task you wish to perform. (Press the number, or press TAB or use the arrow keys to move the cursor to the desired number, and press ENTER.)

CV/LAN Utilities — ASAI Test

```
Heartbeat with switch for ASAI node signal01 was successful.

Heatbeat with switch for ASAI node signal02 was successful.

Unexpected capability = C_ABORT for ASAI node signal03 received.
The capability expected was C_HB_CONF
Primitive type response for ASAI node signal03 !=C_POS_ACK
Primitive type response received = C_REQUEST
Heartbeat test with switch for ASAI node signal03 failed.
```

Screen 5-34. ASAI Test

The above figure shows a sample output screen from the ASAI test CV/LAN utility.

CV/LAN Utilities — ASAI Trace

```
Wed Oct 16 12:16:00 1996

***********************************************

<3P Domain Request> ADJ=>sw {0}crv=0006 sec=505.39
Domain: Extension            24051
***********************************************


***********************************************
SW->adj *0* crv=8006 sec=505.42

<Event Notif>     ADJ=>sw *0*crv=0008 sec=507.60
Domain: Vector Dir Number   24100
***********************************************


***********************************************
SW->adj *0* crv-8008 sec=507.67

<Event Report>      SW->adj *0*crv=8006 sec 508.42
```

Screen 5-35. ASAI Trace

The above figure shows a sample output screen from the ASAI trace CV/LAN utility.

CV/LAN Utilities — ISDN Trace

```
39302 CVBRI downlink message/12 MSG_TR[2]: 01 00 00 00 00 00 00 00 00 00 00 00
39302 CVBRI downlink message/0 MSG_TR[1]: 08 02 80 7f 5a 96 1c 0b 91 a1 08 02
39302 CVBRI downlink message/12 MSG_TR[1]: 01 00 00 00 00 00 00 00 00 00 00 00
39322 CVBRI uplink message/0 MSG_TR[4]: 86 04 00 7f 64 00 0c 00 13 00 08 02
39322 CVBRI uplink message/0 MSG_TR[5]: 86 05 00 7f 64 00 0c 00 01 00 00 00
39322 CVBRI downlink message/0 MSG_TR[4]: 08 02 80 7f 5a 96 1c 0b 91 a1 08 02
39322 CVBRI downlink message/12 MSG_TR[4]: 01 00 00 00 00 00 00 00 00 00 00 00
39322 CVBRI downlink message/0 MSG_TR[5]: 08 02 80 7f 5a 96 1c 0b 91 a1 08 02
39322 CVBRI downlink message/12 MSG_TR[5]: 01 00 00 00 00 00 00 00 00 00 00 00
51343 CVBRI uplink message/0 MSG_TR[1]: 86 01 00 7f 64 96 0c 00 91 a1 08 02
51344 CVBRI uplink message/0 MSG_TR[2]: 86 02 00 7f 64 00 0c 00 01 00 00 00
51344 CVBRI downlink message/0 MSG_TR[1]: 08 02 80 7f 5a 96 1c 0b 91 a1 08 02
51344 CVBRI downlink message/12 MSG_TR[1]: 01 00 00 00 00 00 00 00 00 00 00 00
51344 CVBRI downlink message/0 MSG_TR[2]: 08 02 80 7f 5a 96 1c 0b 91 a1 08 02
51344 CVBRI downlink message/12 MSG_TR[2]: 01 00 00 00 00 00 00 00 00 00 00 00
51363 CVBRI uplink message/0 MSG_TR[5]: 86 05 00 7f 64 00 0c 00 13 00 08 02
51364 CVBRI uplink message/0 MSG_TR[4]: 86 04 00 7f 64 00 0c 00 13 00 08 02
51364 CVBRI downlink message/0 MSG_TR[5]: 08 02 80 7f 5a 96 1c 0b 91 a1 08 02
51364 CVBRI downlink message/12 MSG_TR[5]: 01 00 00 00 00 00 00 00 00 00 00 00
51364 CVBRI downlink message/0 MSG_TR[4]: 08 02 80 7f 5a 96 1c 0b 91 a1 08 02
51364 CVBRI downlink message/12 MSG_TR[4]: 01 00 00 00 00 00 00 00 00 00 00 00
```

Screen 5-36. ISDN Trace

The above figure shows a sample output screen from the ISDN trace CV/LAN utility.

CV/LAN Utilities — ISDN Alarm

```
                              Maintenance
                           CV/LAN Utilities
                              ISDN Alarm



                 Node ID: __   Timeout: ____   Action: __________



This line is used to provide abbreviated help on the currently selected field.

  CANCEL   REFRESH   ENTER                    HELP   ACTION
```

Screen 5-37. ISDN Alarm

This screen can be used to activate or deactivate ASAI alarms on the DEFINITY system for a specific virtual BRI port.

Field Name	Description
Node ID	Node ID number used by CV/LAN clients.
Timeout	The maximum amount of time in seconds you are willing to wait for the DEFINITY system to respond to the activate/deactivate request.
Action	**Read only**. This field determines if an activate or deactivate message will be sent to the DEFINITY system.

Use this screen as follows:

- To activate or deactivate ASAI alarms on the DEFINITY system for a specific virtual BRI port, enter the port number, timeout and press ACTION until the desired action is displayed. Then press ENTER.

CV/LAN Port Status/Control

```
                         CV/LAN Port Status/Control

                DEFINITY        Number of     CV/LAN     Messages  Messages  Message
     Node        Port            Client      Service       to        from     Period
Port  ID        State        Connections    State      DEFINITY  DEFINITY (minutes)

___  __  ________________  _______  _____________  ________  ________   ___
___  __  ________________  _______  _____________  ________  ________   ___
___  __  ________________  _______  _____________  ________  ________   ___
___  __  ________________  _______  _____________  ________  ________   ___
___  __  ________________  _______  _____________  ________  ________   ___
___  __  ________________  _______  _____________  ________  ________   ___
___  __  ________________  _______  _____________  ________  ________   ___
___  __  ________________  _______  _____________  ________  ________   ___


Press STATE, DROP, or MSGPER to effect this entry

CANCEL  REFRESH  [      ]  MSGPER        HELP  STATE  UPDATE  DROP
```

Screen 5-38. CV/LAN Port Status/Control

This screen can be used to view and/or change message traffic statistics.

Field Name	Description
Port	Port number (1-12) used by the DEFINITY system. See the CV/LAN Administration screen to determine which clients are associated with a particular port.
Node ID	Node ID used by CV/LAN clients.
DEFINITY Port State	**Read-only**. Possible port states are as follows: ■ **`NOT CONNECTED`** — The BRI port is not administered (or is busied out) on the DEFINITY system, or Layer 1 is down. ■ **`CONNECTED DOWN`** — The BRI port is administered on the DEFINITY system but Layer 2 is not established. ■ **`CONNECTED`** — The BRI port is administered on the DEFINITY system and Layer 2 is established.

Field Name	Description
DEFINITY Port State (continued)	■ **BUSIEDOUT** — The BRI Port is administered on the DEFINITY system but has been busied out in the BRI driver on the MAPD. ■ **SW INTF DN** — The DEFINITY system interface (angel) is down. ■ **SW INTF DN BSY** — The DEFINITY system interface (angel) is down and the BRI Port has been busied out in the BRI driver on the MAPD.
Number of Client Connections	**Read-only**. Number of currently connected clients.
CV/LAN Service State	Either in **service** or **out of service**.
Messages to the DEFINITY	**Read-only**. The number of messages sent to the DEFINITY system in the last message collection period.
Messages from the DEFINITY	**Read-only**. The number of messages sent by the DEFINITY system in the last message collection period.
Message Period	The time period (in minutes) during which messages are sent and received. This is a per port number. **Default = 30**.

Use this screen as follows:

- To change the port's CV/LAN service state:
  1. Press TAB or use the arrow keys to move to the desired port.
  2. Press STATE to toggle the Service State.

     NOTE:
     Busying a port out causes all TCP connections on that port (if any exist) to be closed. No new connections are permitted on that port until the port is placed back in service.

  3. The following prompt appears: **Are you sure? (Y/N)**. Type Y and press RETURN. The **CV/LAN Port Status/Control** screen reappears showing the changed state.

     If you type N and press RETURN, the **CV/LAN Port Status/Control** screen immediately reappears.

- To drop all client connections for a specific port:
  1. Press TAB or use the arrow keys to move to the desired port.
  2. Press DROP to drop all client connections.

     NOTE:
     New connections are permitted on this port

  3. The following prompt appears: **`Are you sure? (Y/N)`**. Type `Y` and press RETURN. The **CV/LAN Port Status/Control** screen reappears showing the change.

     If you type `N` and press RETURN, the **CV/LAN Port Status/Control** screen will reappear.
- To set the Message Collection Period for a port, select the port and press MSGPER. The **Message Collection Period** screen appears. If no ports are administered, pressing MSGPER does nothing.

CV/LAN Port Status/Control — Message Collection Period (CV/LAN)

```
                    CV/LAN Port Status/Control
                     Message Collection Period


                  Node ID: signalXX   Port: yy

                          Period: ____









This line is used to provide abbreviated help on the currently selected field.

 CANCEL   REFRESH   ENTER   CLEAR        HELP
```

Screen 5-39. Message Collection Period (CV/LAN)

This screen enables you to set the message collection period for a port. When this screen is first displayed, a port number (1 to 12) replaces `YY` in the `port` field. The port number comes from the previous screen (whichever port the cursor was on).

After you enter a value for `Period` on this screen and press (ENTER) the previous screen reappears with the cursor positioned at the beginning of the new entry. Changing the collection period clears the traffic counts (messages to the DEFINITY system and messages from the DEFINITY system) on the **CV/LAN Port Status/Control** screen.

Field Name	Description
Port	The port for which messages are to be collected. **Display-only**.
Period	The time period (in minutes) during which messages are to be collected. Range = 1-720**. Default = 30.**

Use this screen as follows:

1. Type the desired time period, in minutes, up to 12 hours**.**
2. When you are done entering the data, press (ENTER). The screen you were on previously (**CV/LAN Port Status/Control**) will reappear.

DLG System Administration

6

This chapter presents the screens used to administer and maintain the DLG system. Sample configurations are located in “Sample Customer Configurations,” Appendix E.

List of Screens (DLG)

A list of the system administration screens appears below. This list depicts the screen hierarchy and all the screens that will appear if only DLG is installed.

Main Menu (DLG) page 6-3

Login/Password Administration page 6-4

- Add Logins page 6-6
- Change Passwords page 6-8

TCP/IP Administration page 6-10

- This Host page 6-11
- Local Host Table page 6-13
  - Add Host page 6-15
- Network Routing Information page 6-17
  - Network Routing Daemon page 6-18
  - Default Gateway page 6-19
  - Network Routing Table page 6-21
    - Add Routes page 6-23

DLG Administration page 6-25

Add Client Link page 6-27

Maintenance (DLG) page 6-29

Removable Media Operations page 6-30

Set System Time and Date page 6-32

Reset System (DLG) page 6-35

System Logs page 6-36

Security Logs page 6-37

Login Attempt Log page 6-38

Client Access Logs page 6-39

System Reset Log page 6-40

Command Logs page 6-41

Diagnostics page 6-42

Ping Host page 6-43

Hardware Alarms page 6-44

Hardware Status page 6-45

Application Components page 6-46

DLG Port Status/Control page 6-47

Message Collection Period page 6-51

Field Names and Descriptions

Main Menu (DLG)

```
                                  Main Menu

 1.  Login/Password Administration

 2.  TCP/IP Administration...

 3.  DLG Administration

 4.  Maintenance...

 5.  DLG Port Status/Control

 6.  Exit



This line is used to provide abbreviated help on the currently selected field.

  [ EXIT ] [REFRESH] [ ENTER ] [      ]        [ HELP ] [      ] [      ] [      ]
```

Screen 6-1. Main Menu (DLG)

Login/Password Administration

NOTE:
Only the primary administrator using login = `asai_adm` is allowed to add or delete logins. (The ADD and DELETE keys only appear for the primary administrator login.) Also, only the `asai_adm` login can be used to change a password for any login.

```
                    Login/Password Administration

              Login                Login                Login
        ________________     ________________     ________________
        ________________     ________________     ________________
        ________________     ________________     ________________
        ________________     ________________     ________________
        ________________     ________________     ________________
        ________________     ________________     ________________
        ________________     ________________     ________________
        ________________     ________________     ________________
        ________________     ________________     ________________
        ________________     ________________     ________________
        ________________     ________________     ________________
        ________________     ________________     ________________
        ________________     ________________     ________________
        ________________     ________________     ________________
        ________________     ________________     ________________
        ________________     ________________     ________________

This line is used to provide abbreviated help on the currently selected field.

 CANCEL  REFRESH  ADD  DELETE        HELP  CHGPW
```

Screen 6-2. Login/Password Administration

This screen is used to view and delete logins. It also provides access to the **Add Logins** and **Change Passwords** screens. Logins are listed in alphabetical order. A maximum of 45 logins may be administered.

Field Name	Description
Login	Lists all administered logins. Maximum login length is 15 characters.

Use this screen as follows:

- To delete a login:
  1. Press TAB or use the arrow keys to move to the login you want to delete, and then press DELETE.
  2. The following prompt appears: **`Are you sure? (Y/N).`** Type Y and press RETURN. The screen reappears, minus the deleted login.

     If you type N and press RETURN the cursor reappears at the beginning of the line, and the login is not deleted.
  3. Repeat steps 1 and 2 until you have deleted all desired logins. Then press EXIT and the Main Menu reappears.
- To change a login's password, press CHGPW to access the screen for changing passwords.
- To add a login, press ADD to access the **Add Logins** screen.

Add Logins

NOTE:
Only the primary administrator using the `asai_adm` login is allowed to add logins and passwords.

NOTE:
If the primary administrator attempts to add a login that already exists, an error message is displayed.

```
                    Login/Password Administration
                              Add Logins



                         Login: _____________



This line is used to provide abbreviated help on the currently selected field.

  CANCEL   REFRESH   ENTER   CLEAR        HELP
```

Screen 6-3. Add Logins

When you add a login using this screen, after you press the ENTER function key the previous screen reappears with the cursor positioned at the beginning of the new entry.

Field Name	Description
Login	The login to be added. Maximum length is 15 characters.

Use this screen as follows:

1. Type the login you want to add to the system.
2. Press (ENTER) to submit the login.
3. The following prompt appears: **`New password:`**

   Type the password to be associated with the login and press (RETURN).

   Passwords follow normal UNIX® naming conventions. These are:

   - Each password must have at least 6 characters.
   - Each password must contain at least two alphabetic characters and at least 1 numeric or special character. “Alphabetic” includes all uppercase and lowercase letters.
   - Each password must differ from the user’s login name and any reverse or circular shift of that login name. (Corresponding uppercase and lowercase letters are considered equivalent.)
   - A new password must differ from the old one by at least three characters.

   NOTE:
   The `asai_adm` login that the primary administrator uses is not bound by these conventions when making up passwords.

4. The following prompt appears: **`Re-enter password:`**

   Re-enter the password at the prompt and press (RETURN) again. If you entered the password the same way both times, the password is added and the **Login/Password Administration** screen reappears. Repeat this procedure for each login and password you want to add.

Change Passwords

NOTE:
Any user may change his or her password. However, the primary administrator uses the `asai_adm` login to change any user's password.

```
Type Old Password
Type New Password
Re-Type New Password
```

Screen 6-4. Change Passwords

This screen is used to change user passwords. Passwords should be hard to guess and should not contain the following:

- all the same characters (for example, 1111, xxxx)
- sequential characters (for example, 1234, abcd)
- character strings that can be associated with you or your business, such as your name, birthday, business name, phone number, or social security number
- actual words and commonly-used names

Passwords should use as great a variety of characters as possible. For example, if both numbers and letters are permitted, the password should contain both. Passwords should be changed regularly, at least on a quarterly basis. Recycling old passwords is not recommended.

Field Name	Description
Old Password	The existing password. It appears on the screen only for logins other than the primary administrator.
New Password	The password you want to change the existing password to.

Use this screen as follows:

1. Logins other than the primary administrator:

   Type the old password and press RETURN. If you entered it correctly, the following prompt appears: **`New Password`**

2. All logins:

   Type the new password and press RETURN.

   The following prompt appears: **`Re-Type New Password`**

3. Re-type the new password and press RETURN**.**

   If you entered the new password the same way both times, the password is changed. The screen you were on previously (**`Login/Password Administration`**) reappears.

TCP/IP Administration

```
                          TCP/IP Administration

1. This Host
2. Local Host Table
3. Network Routing Information...
4. Exit









This line is used to provide abbreviated help on the currently selected field.
  EXIT   REFRESH   ENTER                    HELP
```

Screen 6-5. TCP/IP Administration

Menu Item	Description
This Host	Provides access to data identifying this circuit pack on the network, including machine's host name, IP address, and subnet mask.
Local Host Table	Provides access to screens for viewing, adding, or deleting all **locally** known client hosts.
Network Routing Information...	Provides access to Network Routing Information, including state of the network routing daemon, default gateway data, and other network routes. Accesses screens for viewing, deleting, or adding information.
Exit	Returns you to previous menu.

To use this menu, select the number of the task you wish to perform. (Press the number, or press TAB or use the arrow keys to move the cursor to the desired number, and press ENTER.)

This Host

```
                    TCP/IP Administration
                          This Host

          Host Name:        ______________________________

          Host IP Address:  __________________

          Subnet Mask:      __________________



This line is used to provide abbreviated help on the currently selected field.

 CANCEL   REFRESH   ENTER   CLEAR        HELP
```

Screen 6-6. This Host

This screen is used to assign a host name to the MAPD Board. The name must be unique in the domain to which the board is attached.

NOTE:
For changes to be implemented, you must reboot the system. See the Screens 3-25, "Reset System (DLG)" and in this chapter.

Field Name	Field Description	R[1]
Host Name	Host name of this circuit pack. **Default = definity.** Maximum field size = 20 characters.	R
Host IP Address	IP address of this circuit pack. **Default = 192.168.25.10** Maximum field size =15 characters.	R
Subnet Mask	Subnet Mask used by this circuit pack. **Change only if alternate network subnetting is desired**. Value = x.x.x.x, where x is a number between 0 and 255, depending on first 2 digits of Host IP address. **Default = blank**. Maximum field size = 15 characters.	

1. R = Required field.

Use this screen as follows:

1. Type the host name, IP address, and, optionally, the subnet mask. Press TAB or use the arrow keys to move from field to field.

   (If you want to clear the Subnet Mask, move to that field, press CLEAR and then press ENTER.)

2. Press CANCEL if you decide not to enter the data, or, when you have finished typing data, press ENTER to submit the host data. The **TCP/IP Administration** menu reappears.

Local Host Table

```
                          TCP/IP Administration                    Page
                           Local Host Table                      X of X

  IP Address        Host Name                   Aliases
  _______________   ________________________    ________________________________
  _______________   ________________________    ________________________________
  _______________   ________________________    ________________________________
  _______________   ________________________    ________________________________
  _______________   ________________________    ________________________________
  _______________   ________________________    ________________________________
  _______________   ________________________    ________________________________
  _______________   ________________________    ________________________________
  _______________   ________________________    ________________________________
  _______________   ________________________    ________________________________
  _______________   ________________________    ________________________________
  _______________   ________________________    ________________________________
  _______________   ________________________    ________________________________
  _______________   ________________________    ________________________________
  _______________   ________________________    ________________________________

This line is used to provide abbreviated help on the currently selected field.

  CANCEL   REFRESH   ADD   DELETE        HELP   [ ]   NXTPG   PRVPG
```

Screen 6-7. Local Host Table

This screen is used to resolve host names. Each locally known host appears on this screen in alphabetical order by host name. A maximum of 84 local hosts may be administered. Defaults or preadministered entries may appear when the screen is first accessed. Users can add or change entries.

Field Name	Description
IP Address	IP address of locally known host. Maximum field size = 15 characters.
Host Name	Name of locally known host. Several defaults are provided. Maximum field size = 20 characters.
Aliases	Additional names associated with this host. Maximum field size = 35 characters. Multiple aliases are separated by spaces. Entries starting with a “#” sign are comments. A “#” may be placed anywhere in the field, but anything following the “#” is considered a comment and ignored.

Use this screen as follows:

- Press NXTPG or PRVPG to access other hosts.
- To delete a host entry:
  1. Press TAB or use the arrow keys to move the cursor to the line you want to delete, and then press DELETE**.**
  2. The following prompt appears: **`Are you sure? (Y/N)`**. Type Y and press RETURN. When the screen reappears, the host is removed.
- To add a host, press ADD to access the **Add Host** screen.

Local Host Table — Add Host

```
                          TCP/IP Administration
                            Local Host Table
                                Add Host

IP Address          Host Name                   Aliases
_______________     _________________________   ______________________________


This line is used to provide abbreviated help on the currently selected field.
  CANCEL   REFRESH   ENTER   CLEAR        HELP
```

Screen 6-8. Add Host

This screen is used to add hosts. When you add a host using this screen, after you press the ENTER function key, the previous screen reappears with the cursor positioned at the beginning of the new entry.

Field Name	Description
IP Address	IP address of locally known host. Maximum field size = 15 characters.
Host Name	Name of locally known host. Maximum field size = 20 characters.
Aliases	Additional names associated with this host. Maximum field size = 35 characters. Multiple aliases are separated by spaces. Entries starting with a “#” sign are comments. A “#” may be placed anywhere in the filed, but anything following the “#” is considered a comment and ignored.

Use this screen as follows:

1. Type the IP address, host name, and any aliases. Type all aliases on one line, but leave a space between each alias.
2. Press the ENTER function key to submit the data.
3. Access the **Add Hosts** screen again and repeat steps 1 and 2 for each new host to be added.

Network Routing Information

```
                          TCP/IP Administration
                       Network Routing Information

1.  Network Routing Daemon

2.  Default Gateway

3.  Network Routing Table

4.  Exit









This line is used to provide abbreviated help on the currently selected field.

  EXIT   REFRESH   ENTER                    HELP
```

Screen 6-9. Network Routing Information

Menu Item	Description
Network Routing Daemon	Allows the user to enable or disable the automatic network routing daemon.
Default Gateway	Allows the user to administer a default gateway.
Network Routing Table	Provides access to all information about other network routes.
Exit	Redisplays the TCP/IP Administration menu.

To use this menu, select the number of the task you wish to perform. (Press the number, or press TAB or use the arrow keys to move the cursor to the desired number, and press ENTER.)

Network Routing Information — Network Routing Daemon

```
                    TCP/IP Administration
                Network Routing Information
                  Network Routing Daemon


            Network routing daemon state: ___









This line is used to provide abbreviated help on the currently selected field.
 CANCEL  REFRESH                    HELP  STATE
```

Screen 6-10. Network Routing Daemon

This screen is used to view and change the state of the network routing daemon. The `Network routing daemon state` field is filled in when the screen first appears.

Field Name	Description
Network routing Daemon state	Either `on` or `off`. When on, the network routing daemon can automatically find routes to other networks. **Default = on**.

Use this screen as follows:

- If you do not want to change the network routing daemon state, press CANCEL to exit the screen.
- If you want to change the network routing daemon state, press STATE to change the state.

  The following prompt appears: **`Are you sure? (Y/N)`**. Type `Y` and press RETURN**.** The screen reappears with the new state displayed.

  If you type `N` and press RETURN**,** the state is not changed.
- When the desired state is displayed, press CANCEL**.** The **Network Routing Information** menu reappears.

Network Routing Information — Default Gateway

```
                    TCP/IP Administration
                Network Routing Information
                      Default Gateway

     Name or IP Address: ______________________________      Status: _____



This line is used to provide abbreviated help on the currently selected field.

  CANCEL   REFRESH   ENTER   CLEAR        HELP
```

Screen 6-11. Default Gateway

A default gateway allows the MAPD to communicate with other hosts in other LANs. The Default Gateway screen is used to:

1. Initially identify the default gateway to the MAPD;
2. Change the Name or IP Address and check the Status, or;
3. Verify that the MAPD board is not communicating with another host because the Status of the Default Gateway is “down.”

This screen is protected against multiple users making simultaneous changes as follows:

- If a user presses ENTER**,** the system checks to see if the information that was displayed upon entry to this screen has changed.
- If it has, the data is not entered and the user is apprised of the problem and exited from the screen. The previous screen (**TCP/IP Administration**) reappears.

Field Name	Description
Name or IP Address	Name or IP Address of the default gateway, the machine used to route all traffic destined for other networks, for which a specific route is not known. Maximum field size = 20 characters.
Status	Either up or down. If down, the gateway is not willing to route traffic for the MAPD.

Use this screen as follows:

- To enter data the first time, or to change data:
  1. Type the name or IP Address of the gateway to be added.
  2. Press CANCEL if you do not want to add the Name or IP Address you typed, or press ENTER to submit the name or IP address.

     The TCP/IP Administration — Network Routing Information menu reappears. Next time when the **Default Gateway** screen is displayed, the data that was entered or changed will be filled in.
- To remove the default gateway that appears in the field, press CLEAR and then ENTER**.**
- If you are only viewing the screen, press CANCEL to return to the **TCP/IP Administration — Network Routing Information** menu.

Network Routing Information — Network Routing Table

```
                          TCP/IP Administration                    Page
                     Network Routing Information                 x of x
                        Network Routing Table

     Destination                 Type       Gateway                     Status

   ___________________________  _________  ___________________________  ______
   ___________________________  _________  ___________________________  ______
   ___________________________  _________  ___________________________  ______
   ___________________________  _________  ___________________________  ______
   ___________________________  _________  ___________________________  ______
   ___________________________  _________  ___________________________  ______
   ___________________________  _________  ___________________________  ______
   ___________________________  _________  ___________________________  ______
   ___________________________  _________  ___________________________  ______
   ___________________________  _________  ___________________________  ______
   ___________________________  _________  ___________________________  ______
   ___________________________  _________  ___________________________  ______
   ___________________________  _________  ___________________________  ______

This line is used to provide abbreviated help on the currently selected field.

 CANCEL   REFRESH   ADD   DELETE        HELP   [    ]   NXTPG   PRVPG
```

Screen 6-12. Network Routing Table

This screen has two uses.

1. If automatic routing is not enabled (see Screen 3-13, "Network Routing Daemon"), users can administer the set of network routes.
2. If automatic routing is enabled, it displays the current set of network routes provided by the Network Routing Daemon.

Routes appear on this screen in numerical order by IP address. A maximum of 65 routes may be administered.

NOTE:
If the routing daemon is enabled, the ADD and DELETE keys do not appear on this screen.

Field Name	Description
Destination	Name or IP address of a host, or a partial IP address of a network. Maximum field size = 20 characters.
Type	The type of destination, either `host` or `network`. (Most routes are to network destinations.)
Gateway	Name or IP address of the gateway, the machine used to route all traffic to the given destination. Maximum field size = 20 characters.
Status	Either `up` or `down`. If `down`, the gateway is not willing to route any traffic.

Use this screen as follows:

- Use [NXTPG] and [PRVPG] to step through the pages.
- To delete route entries:
  1. Press [TAB] or use the arrow keys to move the cursor to the line you want to delete, and then press [DELETE]**.** (This deletes the entire line.)
  2. The following prompt appears: **`Are you sure? (Y/N).`** Type `Y` and press [RETURN]**.**

     If you type `N` and press [RETURN], the cursor reappears at the beginning of the line and the line is not deleted.
  3. Repeat steps 1 and 2 until you have deleted all desired routes. Then press [CANCEL] and the **Network Routing Information** menu reappears.
- To add routes, press [ADD] to access the **Add Routes** screen.

Network Routing Table — Add Routes

```
                    TCP/IP Administration
                Network Routing Information
                   Network Routing Table
                         Add Routes

Destination                          Type      Gateway
____________________________         _______   ____________________________



This line is used to provide abbreviated help on the currently selected field.

 CANCEL   REFRESH   ENTER   CLEAR        HELP
```

Screen 6-13. Add Routes

This screen is used to add network routes. A maximum of 65 routes may be added.

When you add a route, after you press the ENTER function key, the previous screen reappears with the cursor positioned at the beginning of the new entry.

Field Name	Description
Destination	Name or IP address of a host, or a partial IP address of a network. Maximum field size = 20 characters.
Type	The type of destination, either `host` or `network`. (Most routes are to network destination.)
Gateway	Name or IP address of the gateway, the machine used to route all traffic to the given destination. Maximum field size = 20 characters.

Use this screen as follows:

1. Type the destination, type, and gateway of the route to be added. Press TAB or use the arrow keys to move from field to field.
2. Press CANCEL if you do not want to add what you just typed, or press ENTER to enter the data. The **Network Routing Information — Network Routing Table** screen reappears.
3. Access this screen again and repeat steps 1 and 2 for each new route to be added.

DLG Administration

```
                              DLG Administration

      Port    Client Name or IP Address   Client Link       Client Status
       __     ________________________      __              ___________
       __     ________________________      __              ___________
       __     ________________________      __              ___________
       __     ________________________      __              ___________
       __     ________________________      __              ___________
       __     ________________________      __              ___________
       __     ________________________      __              ___________
       __     ________________________      __              ___________

This line is used to provide abbreviated help on the currently selected field.

  CANCEL   REFRESH   ADD   DELETE        HELP        UPDATE
```

Screen 6-14. DLG Administration

This screen is used to associate clients with ASAI ports on the DEFINITY system. Links appear in numerical sequence by port number. A maximum of eight links may be administered, but depending on your system and the number of ASAI links you have purchased, you may not be able to make use of all eight entries. One default entry appears on the screen until it is changed: **`Port = 1, Client Name = client,`**
`Client Link = 1`. The IP address of `client` is 192.168.25.20.

This screen is protected against multiple users making simultaneous changes as follows: If a user presses ADD or DELETE, the system checks whether the information that was displayed upon entry to this screen has changed. If it has, the ADD or DELETE is not performed and the user is apprised of the problem and exited from the screen.

Field Name	Description
Port	Port number used on the DEFINITY system. Valid range is 1 to 12. Each port can only be assigned once.
Client Name or IP Address	Host name or IP address of the client machine authorized to connect to this port. (Network name of the adjunct.) Must be resolvable by the local host table, or be an IP address. Maximum field size = 20 characters.
Client Link	Link number from 1 to 8, used by client when connecting to this port, if client has more than 1 logical link into the DLG. **Default = 1**.
Client Status	**Read-only**. Either **`in use`** or **`idle`**. Idle client states may be modified or deleted. If you attempt to delete a port which is in use, the ASAI link associated with that port is disconnected.

Use this screen as follows:

- To delete a port:
  1. Press [TAB] or use the arrow keys to move the cursor to the line you want to delete, and then press [DELETE]. (This deletes the entire line.)
  2. The following prompt appears: **`Are you sure? (Y/N)`**. Type `Y` and press [RETURN].

     If you type `N` and press [RETURN], the cursor reappears at the beginning of the line and the line is not deleted.
  3. Repeat steps 1 and 2 until you have deleted all desired ports. Then press [CANCEL] and the Main Menu reappears.
- To add a port, press [ADD] to access the **Add Client Link** screen.
- To update the screen with current information, press [UPDATE].

Add Client Link

```
                          DLG Administration
                           Add Client Links

        Port              Client Name or IP Address         Client Link
         __               ________________________             __









This line is used to provide abbreviated help on the currently selected field.

  CANCEL   REFRESH   ENTER   CLEAR        HELP
```

Screen 6-15. Add Client Link

This screen is used to add client links. When you add a client link, after you press the ENTER function key, the previous screen (**DLG Administration**) appears with the cursor at the beginning of the new entry.

This screen is protected against multiple users making simultaneous changes as follows: If a user presses ENTER, the system checks whether the information that was displayed upon entry to this screen has changed. If it has, the data is not entered and the user is apprised of the problem and exited from the screen.

Field Name	Description
Port	Port number used on the DEFINITY system. Valid range is 1 to 12. Each port can only be assigned once.
Client Name or IP Address	Host name or IP address of the client machine authorized to connect to this port. (Network name of the adjunct.) Must be resolvable by the local host table, or be an IP address. Maximum field size = 20 characters.
Client Link	Link number from 1 to 8, used by client when connecting to this port if client has more than 1 logical link into the DLG. **Default = 1**.

Use this screen as follows:

1. Type the port, client name, and number of the first client link you want to add. Press TAB or use the arrow keys to move from field to field.
2. Press CANCEL if you do not want to add what you just typed, or press ENTER to enter the data. The previous screen reappears.
3. Access the **Add Client Link** screen again and repeat steps 1 and 2 for each client link to be added.

Maintenance (DLG)

```
                                Maintenance

 1.  Removable Media Operations...

 2.  Set System Time and Date

 3.  Reset System...

 4.  System Logs

 5.  Security Logs...

 6.  Diagnostics...

 7.  Application Components

 8.  Exit

This line is used to provide abbreviated help on the currently selected field.

  CANCEL   REFRESH   ENTER                    HELP
```

Screen 6-16. Maintenance (DLG)

Removable Media Operations

```
                                Maintenance
                        Removable Media Operations

 1.  Format Removable Media

 2.  Save Configuration Data To Removable Media

 3.  Restore Configuration Data From Removable Media

 4.  Exit



This line is used to provide abbreviated help on the currently selected field.

  CANCEL   REFRESH   ENTER                    HELP
```

Screen 6-17. Removable Media Operations

Menu Item	Description
Format Removable Media	Instructs the system to format the removable media.
Save Configuration Data to Removable Media	Instructs the system to start a backup of all its configuration data.
Restore Configuration Data From Removable Media	Begins restoring configuration data from removable media. **The system must be rebooted after performing a restore.**
Exit	Returns you to previous screen.

Use this screen as follows:

1. Select the activity you want to perform. Press the corresponding number, or press TAB or use the arrow keys and press ENTER.
2. For each activity, the following prompt appears: **`Are you sure? (Y/N)`**. Type `Y` and press RETURN. The activity is shown on the screen in real time.

   If you type `N` and press RETURN, this screen reappears.
3. After the activity you select is completed, the **Maintenance** menu reappears.

Set System Time and Date

```
                                Maintenance
                          Set System Time and Date


            Time: __:__              Month: __      Day: __     Year: ____

                         Standard Timezone Information
                           ST Name:         __________
                           Offset Time:     __:__
                           Direction (E/W): _

                         Daylight Savings Timezone Information
                           DST Name:       ___________




This line is used to provide abbreviated help on the currently selected field.

  CANCEL   REFRESH   ENTER   CLEAR          HELP
```

Screen 6-18. Set System Time and Date

This screen is used to set the system time, date, and time zone. Setting a second time zone is optional.

Field Name	Description
Time	Hours and minutes (xx:xx), plus a time zone name up to 10 characters (for example, EDT). The time zone to the right of the time field is the time zone currently in use and is display-only.
Month	Two digits (01-12)
Day	Two digits (01-31)
Year	Four digits (xxxx)
Standard Timezone Information Name:	The name or abbreviation of the standard time zone for your location. A list of standard abbreviations follows this table.

Field Name	Description
Offset Time:	The number of hours that vary from Universal Time (also known as Greenwich Mean Time). See standard time zone.
Direction (E/W)	The direction your location is from the Universal Time zone, east (E) or west (W).
Daylight Savings Timezone Information Name	The name or abbreviation of a second, optional time zone. A list of standard abbreviations follows this table. If you enter any value, this time zone follows U.S. Daylight Savings rules. In the U.S., Daylight Savings begins on the first Sunday of April at 2 am. Standard Time begins on the last Sunday of October at 2 am. If this field is blank, then Daylight Savings does not apply.

Standard Time Zone Name	Standard Time Zone Abbreviation	Daylight Savings Abbreviation	Offset Time	(Offset) Direction
Greenwich	GMT	GDT	00:00	W
Atlantic	AST	ADT	04:00	W
Eastern	EST	EDT	05:00	W
Central	CST	CDT	06:00	W
Mountain	MST	MDT	07:00	W
Pacific	PST	PDT	08:00	W
Yukon	YST	YDT	08:00	W
Alaska	none (use full name)	none (use full name)	10:00	W
Hawaii	HST	HDT	10:00	W
Beijing	BST	BDT	11:00	W

To use this screen:

1. On the top line, type the time, month, day, and year. Press TAB or use the arrow keys to move from field to field.
2. Under **`Standard Timezone Information,`** type the name or abbreviation in the **`name`** field, the offset time, and the direction, as follows:
   - If you enter a name or abbreviation from the list in this section, then you do not have to enter offset time or direction.
   - If you leave this field blank, or if you clear the offset time or direction, they are supplied automatically from the preceding table standard time zone.

- If you enter a name or abbreviation that is **not** in the table, then you must also enter offset time and direction.

  NOTE:
  The system determines the time zone that appears to the right of the **`Time`** field in the top line of the screen according to what is entered in these fields and the current date and time.

3. If you do not want to enter a second time zone, be sure **`DST Name`** is clear and then skip to step 4.

   If you do want to enter a second time zone that follows U.S. Daylight Savings rules, under **`Daylight Savings Timezone Information`**, type the name or abbreviation in the Name field as you did in step 2. However, note the following conventions for this field:

   - If you type **any** value in this field, then you are setting an alternate timezone that follows U.S. Daylight Savings rules.
   - If you want a second time zone but do not want U.S. Daylight Savings rules to apply, then make sure the field is blank and manually change the system clock on the appropriate date.

4. Press ENTER when you are done typing data. The **Maintenance** menu reappears.

Reset System (DLG)

```
                                Maintenance
                               Reset System

 1.  Shutdown

 2.  Reboot System

 3.  Restart DLG

 4.  Exit









This line is used to provide abbreviated help on the currently selected field.

  CANCEL   REFRESH   ENTER                    HELP
```

Screen 6-19. Reset System (DLG)

System Logs

```
      <Date>                        Maintenance                  Page XXXX of XXXX
                                    System Logs
Time     Type     Process    Description
_______  ______   ________   ________________________________________________________

This line is used to provide abbreviated help on the currently selected field.
  CANCEL   REFRESH   NXTDAY   PRVDAY        HELP      NXTPG   PRVPG
```

Screen 6-20. System Logs

This screen displays up-to-the-minute information on system activity, including errors.

Field Name	Description
Date	Month, day and year (MM/DD/YYYY) changes as you move among dates. If an asterisk (*) follows the day, this indicates an overflow log for this date. This second log should be considered a separate day when moving through days.
Time	Time of the log entry (Hour:Minutes:Seconds)
Type	Severity of the log entry (**FYI, WARNING**, or **CRITICAL**)
Process	The process that created the log entry. Examples are **oam_ui** and **Brouter**.
Description	Description of the log entry

To use this screen, press NXTDAY and PRVDAY to move among days. Press NXTPG and PRVPG to step through multiple pages.

Security Logs

```
                                Maintenance
                               Security Logs

 1.  Login Attempt Log

 2.  Client Access Logs

 3.  System Reset Log

 4.  Command Logs

 5.  Exit





This line is used to provide abbreviated help on the currently selected field.

  CANCEL   REFRESH   ENTER                    HELP
```

Screen 6-21. Security Logs

Menu Item	Description
Login Attempt Log	Lists login attempts that failed after 5 or more attempts.
Client Access Logs	Provide access to all client connection attempts.
System Reset Log	Provides access to all system boot records.
Command Logs	List all commands executed from administration/maintenance screens, such as adding a new login. List all changes to parameters.

Use this screen as follows:

1. Select the item for which you would like to see the information. Press the number, or press TAB or use the arrow keys and press ENTER**.** The applicable screen appears.
2. When you are done viewing data, press Exit to return to the **Maintenance** menu.

Security Logs — Login Attempt Log

```
                                Maintenance                    Page X of X
                                System Logs
                             Login Attempt Log

Date and Time        User            Terminal Port

CANCEL  REFRESH                  HELP            NXTPG   PRVPG
```

Screen 6-22. Login Attempt Log

Field Name	Description
Date and Time	Date and time of the invalid login attempt.
User	Login of the user who attempted to log in. After five failed login attempts occur, all are logged. If fewer than five are attempted, then none is logged.
Terminal Port	MAPD port through which the login attempt was made.

To view information on this screen, press NXTPG and PRVPG to step through multiple pages.

Security Logs — Client Access Log

```
<Date>                          Maintenance                  Page XXXX of XXXX
                              Security Logs
                            Client Access Logs
Time     Type      Process  Description
_______  ________  _______  ____________________________________________________



This line is used to provide abbreviated help on the currently selected field.
 CANCEL  REFRESH  NXTDAY  PRVDAY        HELP        NXTPG  PRVPG
```

Screen 6-23. Client Access Log

Field Name	Description
Date	Month, day, and year (MM/DD/YYYY) changes as you move among dates. If an asterisk (*) follows the day, this indicates an overflow log for this date. This second log should be considered a separate day when moving through days.
Time	Time of the client access (Hour:Minutes:Seconds).
Type	Severity Indicator (**FYI, WARNING**, or **CRITICAL**).
Process	Process that created the log entry. Examples are `Brouter` and **oam_ui**.
Description	Description of the client access activity. Example: **client/3520 TCP_Connect**.

To use this screen, press NXTDAY and PRVDAY to move among days. Press NXTPG and, PRVPG to step through multiple pages.

Security Logs — System Reset Log

```
                                Maintenance                 Page XXXX of XXXX
                               Security Logs
                             System Reset Log

Time      Date            Description
____      ________        ____________________________________________________

CANCEL  REFRESH  [      ]  [      ]        HELP  [      ]  NXTPG  PRVPG
```

Screen 6-24. System Reset Log

Field Name	Description
Time	Time of the reset (Hour:Minutes:Seconds).
Date	Date of the reset (MM/DD/YY).
Description	Description of the reset (system boot).

To use this screen, press NXTPG and PRVPG to step through multiple pages.

Security Logs — Command Log

```
     <Date>                        Maintenance                    Page XXXX of XXXX
                                   Security Logs
                                    Command Logs
 Time       User            Description
 _____      _____           ________________________________________________________

 This line is used to provide abbreviated help on the currently selected field.
   CANCEL   REFRESH   NXTDAY   PRVDAY          HELP        NXTPG   PRVPG
```

Screen 6-25. Command Log

Field Name	Description
Date	Month, day, and year (MM/DD/YYYY) changes as you move among dates. If an asterisk (*) follows the day, this indicates an overflow log for this date. This second log should be considered a separate day when moving through days.
Time	Time of the client access (Hour:Minutes:Seconds).
User	The login_id of the user executing the command.
Description	Description of the command that was executed. **Example: delete: route: 135.20.87 network asaimapd.**

This screen displays up-to-the-minute data for the current day. Most recent data is displayed first.

To use this screen, press NXTDAY and PRVDAY keys to move among days. Press NXTPG and PRVPG to step through multiple pages.

Diagnostics

```
                                   Maintenance
                                   Diagnostics

 1.  Ping Host

 2.  Hardware Alarms

 3.  Hardware Status

 4.  Exit









This line is used to provide abbreviated help on the currently selected field.

  CANCEL   REFRESH   ENTER                    HELP
```

Screen 6-26. Diagnostics

This screen allows the user to test connections and check alarms and status for hardware.

Menu Item	Description
Ping Host	Provides access to the Ping Host Screen.
Hardware Alarms	Displays hardware alarms.
Hardware Status	Displays hardware status.
Exit	Returns you to the previous menu.

Use this screen as follows:

1. Select the item for which you would like to see the information. Press the number, or press TAB or use the arrow keys and press ENTER. The applicable screen appears.
2. When you are done viewing data, press EXIT to return to the **Maintenance** menu.

Diagnostics — Ping Host

```
                                Maintenance
                                Diagnostics
                                 Ping Host


                    Host Name or IP Address: ____________________
                    Packet count:            ___
                    Packet size:             ___









This line is used to provide abbreviated help on the currently selected field.

  CANCEL   REFRESH   ENTER   CLEAR        HELP
```

Screen 6-27. Ping Host

This screen allows the user to test the connection between the MAPD and any host.

Field Name	Description
Host Name or IP Address	Name or IP address of the host you are trying to ping. Maximum field size = 20 characters.
Packet Count	The number of packets sent between the MAPD and the host. Valid range is 1-999. **Default = 1**.
Packet Size	The size of the packets sent between the MAPD and the host. Valid range is 64-999. **Default = 64**.

Use this screen as follows:

1. Type the host name, IP Address, packet count, and packet size. Use TAB or the arrow keys to move from field to field.
2. When you are done entering data, press ENTER to enter the data, or CANCEL to return to the **Maintenance** menu. If you press ENTER, this displays the results and redisplays this screen. (You can do multiple pings.)

Diagnostics — Hardware Alarms

```
TN Code/Vintage:
        TN801B   V1
FW Version:
        BOOT=777        APPL=15000
RM Version:
        BOOT=0.1.444    APPL=0.1.4
Alarm Count: 2
        platform ambient temperature is high [WARNING]
        voltage out of range [MINOR]



(EOF):
```

Screen 6-28. Hardware Alarms

This is a read-only screen that displays any hardware alarms.

Field Name	Description
TN Code/Vintage	Displays the MAPD (TN801B) board code and vintage as reported by the DEFINITY system.
FW Version	Displays the firmware versions.
RM Version	Displays the remote maintenance firmware versions.
Alarm Count	Displays the number of active alarms followed by a description of each alarm and its severity.

NOTE:
Contact the TSC if there are any alarms or if any of the tests fail.

Use this screen as follows:

- Press RETURN to return to the **Diagnostics** menu.

Diagnostics — Hardware Status

```
TN Code/Vintage:
        TN801B   V2
FW Version:
        BOOT=PIFN 20496, FW version 16, Dev_id 0, Comp_id 10
        APPL=PIFN 20496, FW version 16, Dev_id 0, Comp_id 10
RM Version:
        BOOT=1.0.8 (boot)
        APPL=1.0.8

Active: APPL

Alarm Count: 0
        (no alarms)
Temperatures:
           actual           min             max
Temp1    91.64 deg F    40.00 deg F     158.00 deg F
Temp2    84.80 deg F    40.00 deg F     158.00 deg F

Voltages:
           actual           min             max
+VEE      +12.10V         +11.40V         +12.60V
-VEE      -12.15V         -12.60V         -11.40V


:
```

Screen 6-29. Hardware Status

This is a read-only screen that displays hardware status.

Field Name	Description
TN Code/Vintage	Displays the MAPD (TN801B) board code and vintage as reported by the DEFINITY system.
FW Version	Displays the firmware version.
RM Version	Displays the remote maintenance firmware version.
Alarm count	Displays the number of active alarms followed by a description of each alarm and its severity.

NOTE:
Contact the TSC if any alarms exist or if any tests fail.

Use this screen as follows:

- Press RETURN to return to the **Diagnostics** menu.

Application Components

```
=========== Application Packages ===========
DLG             DLG application
                (MAPD) Release 2.0, Issue 2.01
brm             BRM driver
                (MAPD) Release 2.0, Issue 2.01
cvasai          AVAYA CALLVISOR PC ASAI
                (MAPD) 6.1.0
cvisdn          AVAYA CALLVISOR PC ISDN
                (MAPD) 6.1.0
cvlansrv        AVAYA CV/LAN SERVER
                (MAPD) 6.1.0
cvmapd          AVAYA CALLVISOR PC OAM
                (MAPD) 6.1.0
klog            MAPD klog driver
                (MAPD) Release 2.0, Issue 2.01
mapd-ae         MAPD Application Environment
                (MAPD) Release 2.0, Issue 2.01

============ Platform Packages =============
angl            ANGEL Driver
                (MAPD) Release 2.0, Issue 2.01
bri             BRI Driver
                (MAPD) Release 2.0, Issue 2.01
:
```

Screen 6-30. Application Components

The above screen shows a sample output screen from the Application Components.

DLG Port Status/Control

```
                         DLG Port Status/Control

          DEFINITY     TCP/IP       DLG     Messages    Messages    Message
            Port       Connection   Service     to         from      Period
Port       State       State       State    DEFINITY    DEFINITY   (minutes)

 __   _________   __________  _________    ____        ____        ___
 __   _________   __________  _________    ____        ____        ___
 __   _________   __________  _________    ____        ____        ___
 __   _________   __________  _________    ____        ____        ___
 __   _________   __________  _________    ____        ____        ___
 __   _________   __________  _________    ____        ____        ___
 __   _________   __________  _________    ____        ____        ___
 __   _________   __________  _________    ____        ____        ___


This line is used to provide abbreviated help on the currently selected field.

 CANCEL  REFRESH  [      ]  MSGPER        HELP  STATE  UPDATE  DROP
```

Screen 6-31. DLG Port Status/Control

This screen can be used to change a port's service state or close a port's TCP connection. Changing the port's service state affects the port's other states as well.

Field Name	Description
Port	Port number (1-12) used by the DEFINITY system. To determine which client is associated with a particular port, See the Screen 3-19, ''DLG Administration.''
DEFINITY system Port State	**Read-only**. Possible port states are as follows: ■ **`NOT CONNECTED`** — The BRI port is not administered (or is busied out) on the DEFINITY system or Layer 1 is down. ■ **`CONNECTED DOWN`** — The BRI port is administered on the DEFINITY system but Layer 2 is not established. ■ **`CONNECTED`** — The BRI port is administered on the DEFINITY system and Layer 2 is established. ■ **`BUSIEDOUT`** — The BRI Port is administered on the DEFINITY system but has been busied out in the BRI driver on the MAPD. ■ **`SW INTF DN`** — The DEFINITY system interface (angel) is down. ■ **`SW INTF DN BSY`** — The DEFINITY system interface (angel) is down and the BRI Port has been busied out in the BRI driver on the MAPD.

Field Name	Description
TCP/IP Connection State	**Read-only**. ■ **`REACHABLE`** — The client is responding to ICMP echo requests (host recognizes client but cannot communicate). ■ **`UNREACHABLE`** — The client is not responding to ICMP echo requests (host does not recognize client). ■ **`CLOSED`** — The TCP connection has been closed. ■ **`LISTEN`** — TCP is listening for incoming connections. ■ **`SYN SENT`** — TCP is actively trying to establish a connection. ■ **`SYN RECEIVED`** — Initial synchronization of the TCP connection is under way. ■ **`ESTABLISHED`** — The TCP connection has been established. This is the steady state when the client is connected. ■ **`CLOSE WAIT`** — The client has closed its TCP connection. The MAPD's TCP is waiting for a close. ■ **`FIN WAIT 1`** — The MAPD's TCP connection is initiating a close. ■ **`CLOSING`** — The MAPD's TCP has notified the client's TCP of its intent to close. It is now awaiting acknowledgment. ■ **`LAST ACK`** — The client has closed its TCP connection. The MAPD has closed its TCP connection and is now awaiting acknowledgment. ■ **`FIN WAIT 2`** — The MAPD's TCP connection has initiated a close and is now awaiting shutdown from the client's TCP. ■ **`TIME WAIT`** — The MAPD has closed its TCP connection and is waiting for retransmission of the shutdown from the client's TCP. ■ **`UNKNOWN`** — Self-explanatory. Contact the TSC.
DLG Service State	Either **`in service`** or **`busied out.`**

Field Name	Description
Messages to the DEFINITY system	**Read-only**. The number of messages sent to the DEFINITY system in the last message collection period.
Messages from the DEFINITY system	**Read-only**. The number of messages sent by the DEFINITY system in the last message collection period.
Messages Period (minutes)	The time period (in minutes) during which messages are sent and received. This is a per-port number entered on the **Message Collection Period** screen. **Default = 30**.

Use this screen as follows:

- To change the port's service state:
  1. Press TAB or use the arrow keys to move to the desired port.
  2. Press STATE to toggle the service state:

     NOTE:
     Busying a port out causes that port's TCP connection (if one exists) to be closed. No new connections are permitted on that port until the port is placed back in service.

  3. The following prompt appears: **`Are you sure? (Y/N)`**. Type Y and press RETURN**.** The **DLG Port Status/Control** screen reappears, showing the changed state.

     If you type N and press RETURN the **DLG Port Status/Control** screen immediately reappears.
- To update the screen with current information, press UPDATE
- To close a port's TCP connection:
  1. Press TAB or use the arrow keys to move to the desired port.
  2. Press DROP to close the port's TCP connection.

     NOTE:
     New connections are permitted on this port.

  3. The following prompt appears: **`Are you sure? (Y/N)`**. Type Y and press RETURN**.** The **DLG Port Status/Control** screen reappears, showing the change.

     If you type N and press RETURN the **DLG Port Status/Control** screen immediately reappears.
- To set the Message Collection Period for a port, select the port and press MSGPER**.** The **Message Collection Period** screen appears. If no ports are administered, pressing MSGPER does nothing.

DLG Port Status/Control — Message Collection Period

```
                          DLG Port Status/Control
                         Message Collection Period



            Port: XX           Client: YY      Link: ZZ

                             Period: ____



This line is used to provide abbreviated help on the currently selected field.

  CANCEL   REFRESH   ENTER   CLEAR        HELP
```

Screen 6-32. Message Collection Period

This screen enables you to set the message collection period for a port. When the screen is first displayed, a port number (1 to 12) replaces **xx** in the **Port** field, the client's name or IP address replaces **yy** in the **Client** field, and the client's link replaces **zz** in the **Link** field. The port number comes from the previous screen (whatever port the cursor was on).

After you enter a value for **Period** on this screen and press ENTER the previous screen reappears with the cursor positioned at the beginning of the new entry. Changing the collection period clears the traffic counts (messages to the DEFINITY system and messages from the DEFINITY system) on the **DLG Port Status/Control** screen.

Field Name	Description
Port	The port for which messages are to be collected. Display-only.
Client	The client name or IP address for which messages are to be collected. Display-only.
Link	The client link for which messages are to be collected.
Period	The time period (in minutes) during which messages are to be collected. Range = 1-720. **Default = 30**.

Use this screen as follows:

1. Type the desired time period, in minutes, up to 12 hours.
2. When you are done entering the data, press ENTER. The screen you were on previously (**DLG Port Status/Control**) reappears.

PBX Carrier Configuration Worksheets

A

This appendix contains worksheets helpful in installing the MAPD system. Worksheet A-1 is used to obtain an inventory of your present circuit pack arrangement in the PBX. Worksheet A-2 is for help in determining how to rearrange these circuit packs to “free up” three slots for the MAPD system assembly. Worksheet A-3 is for listing the slots that the system assembly will occupy.

Guidelines for using these worksheets are as follows:

1. Move as few circuit packs as possible.
2. Locate three contiguous slots in the DEFINITY system Cabinet. The right most slot must be a port slot, (indicated by purple color).
3. Three MAPD system assemblies per carrier are permitted. One per carrier is preferred so that one carrier power supply failure will not take down multiple units.
4. Start placement from the left side of the carrier.
5. Placement in a DEFINITY system Multi-Carrier Cabinet should be such that MAPD system assemblies are not vertically aligned. For example, in a standard reliability R6si system if the TN801B board in the assembly is placed in slot 7 of the J58890AH control carrier A, then the second TN801B board could be placed in slot 18 of the port carrier B, and the third in slot 12 of the port carrier C.
6. For ProLogix, the preferred slots are 06 and 07 in the cabinet.

Worksheet A-1: Port Slot Assignments (Before Carrier Arrangement)

Date _____

Prepared By _____

Contact Telephone Number _____

Complete the following worksheet to indicate how circuit packs are currently arranged in the PBX carrier.

On this worksheet, the slots are numbered as seen from the *front* of the carrier, with slot 1 on the far left and slot 20 on the far right. It is not necessary to fill in the worksheet for all existing circuit packs; simply specify the circuit packs that must be moved (if any) in the carrier reconfiguration process.

Carrier Function	CARRIER A[1]	CARRIER B	CARRIER C	CARRIER D	CARRIER E
port slot 1					
port slot 2					
port slot 3					
port slot 4					
port slot 5					
port slot 6					
port slot 7					
port slot 8					
port slot 9					
port slot 10					
port slot 11					
port slot 12					
port slot 13					
port slot 14					
port slot 15					
port slot 16					
port slot 17					
port slot 18					
port slot 19					
port slot 20					

1. Occasionally there are control slots to the left of the port slots in these carriers.

Worksheet A-2: Port Assignments (for Carrier Rearrangement)

Date _____

Prepared By _____

Contact Telephone Number _____

Complete the following worksheet to indicate how circuit packs should be arranged in the PBX carrier before the MAPD system is installed. On the worksheet, the slots are numbered as seen from the front of the carrier, with slot 1 on the far left and slot 20 on the far right. It is not necessary to fill in the worksheet for all the existing circuit packs; simply specify the new positions or circuit packs that must be moved (if any) and then indicate the three slots the MAPD system is to occupy.

Use the information in this appendix to determine the carrier into which the MAPD system should be installed.

Carrier Function	CARRIER A	CARRIER B	CARRIER C	CARRIER D	CARRIER E
port slot 1					
port slot 2					
port slot 3					
port slot 4					
port slot 5					
port slot 6					
port slot 7					
port slot 8					
port slot 9					
port slot 10					
port slot 11					
port slot 12					
port slot 13					
port slot 14					
port slot 15					
port slot 16					
port slot 17					
port slot 18					
port slot 19					
port slot 20					

Worksheet A-3: Port Slot Locations for the MAPD System Assembly

Date _____

Prepared By _____

Contact Telephone Number _____

On the table below, specify the locations of the three contiguous slots into which the MAPD system assembly is to be installed.

Slot occupied by MAPD	Digital Port Equipment Location
first	
second	
third	

The three contiguous slots are administered with codes or left blank as shown below.

Switch	Slot 1	Slot 2	Slot 3
R5 and higher (provisioned with R6.3 or later software in V5 or V6 mode)	Reserved	Reserved	TN801B

Terminal and Modem Option Settings

B

This appendix contains:

- A worksheet for use in determining what terminals and modems you will use with the MAPD system
- Information on option settings

Worksheet B-1: Terminals/Modems

Date _____

Prepared By _____

Contact Telephone Number _____

To the AE:

Complete this worksheet with the customer before configuring and ordering the MAPD system.

Options	Terminal 1	Terminal 2
What type of terminal would you like to use? Options are: 715 BCT,513 BCT, 4410, 4415, 4425, 5410, 5420, 5425, 610 and 615 (using 513, 4410, or 4425 emulation cartridge), or a PC with a 513 or 4410 emulation package or G3-MA. Also, the Cross-Talk software tool (via 513 emulation), or Telnet with an emulated terminal type vt100, vt220, vt320, vt950, ibm3101, ibm5051, hp2621, hp2624, ansi, wyse50, wyse60, or PC. (The 715 BCT terminal allows an administrator to toggle between the DEFINITY system administration screens and MAPD system screens.)		
How would you like the terminal connected to the MAPD system? You can implement any of the following: ■ Directly via cables ■ Via modem The standard modem will be the Sportster® External 33.6 fax modem from US Robotics. Instructions on how to properly setup this modem are provided in Section, "Setting up the US Robotics Sportster External 33.6 Fax Modem for the Local Console Port (Admin/Port B)" in this Appendix, and it can be ordered from Avaya. Other modems can also be used provided they are properly setup.		
What length cables would you like for the terminals? Default is 50 feet: other options are 10, 20. 30, or 40.		

Terminal Option Settings

Set the options listed below to the corresponding setting for your terminal. Refer to the manual for your terminal for available options and the procedure to set them.

Option	Setting
Speed	9600
Duplex	full
Send parity	space
Check parity	no
Memory access	scroll
Clock	async
Return key	CR
Newline on LF	no
Autowrap	on
Cursor	steady
Key click	off
Margin bell	off
Transmission	char
Columns	80
Send from	cursor
Send edit seq	yes
Send graphics	no
Enter key	Esc-S-B
Block terminator	
Answerback	

Modem Option Settings

Specific information on how to set up the US Robotics Sportster external 33.6 fax modem is given below. This involves writing parameters to the modem's NVRAM (Non-Volatile Random Access Memory). Generic information is also given with which other modems may be configured. For these other modems, set the option(s) listed below on your modem, then save the software settings in the modem's NVRAM. Refer to the appropriate modem manual for available software options and the procedure for setting them.

NOTE:
The following step must be completed before connecting the US Robotics modem to the system.

Setting up the US Robotics Sportster External 33.6 Fax Modem for the Local Console Port (Admin/Port B)

- On the back of the modem, configure DIP switches 1, 3, 4, and 8 in the down or **On** position.
- On the back of the modem, configure DIP switches 2, 5, 6, and 7 in the Up or **Off** position.
- Attach one end of the server cable to your modem and the other end to your terminal or PC.
- Configure the terminal or communications software setup to 9600 Baud.
- Enter the terminal mode of the communications software if it is being used or on the terminal type the following:

  `AT`

  and press RETURN or control-M on the keyboard. The modem should respond "**OK**".
- Enter the following command:

  `AT&F&H2&I2&B0&W`

  and press RETURN or Control-M on the keyboard. The modem should respond "**OK**".

Setting up the US Robotics Sportster External 33.6 Fax Modem for the Maintenance Port (Maint/Port A)

No special setup is required, the factory default and configuration for the modem will work for this interface.

Setting up a Generic Modem for use with the Local Console Port (Admin/Port B)

The following parameters should be set for any modems that will be connected to the Admin/Port B. Refer to your particular modem documentation for information on storing these parameters in the modem's NVRAM.

Auto Answer after 1 ring
Ignore DTR
Use XON/OFF flow control
Suppress Local Echo
DTE speed-floating

Ordering Information

C

This appendix contains a listing of Price Element Codes (PECs) along with part numbers and manufacturing codes (also called comcodes) for primary and optional components comprising the MAPD system and the two applications that can run on it: the CV/LAN and the DLG.

Complete System

Description	QTY	PEC
MAPD System (TN801B V5)	1	1273-MPD
DEFINITY LAN GATEWAY R2 SOFTWARE	1	1273 LAN
CV/LAN SOFTWARE R8.2 and CLIENT SOFTWARE[1]	1	1273-CVL
US Robotics external modem (33.6k)	1	2569-839

1. You can access the CVLAN Client Software at the following url: http://support.avaya.com/ccenter/cti/cvlan/sd/

The hardware, software and documentation included in these Price Element Codes is listed in Table C-2.

Primary Equipment

Description	PEC	Comcode MANF. CODE	QTY	Attribute
MAPD CIRCUIT PACK TN801B V5	1273-MPD	103557542	1	
MAPD PROCESOR CARD 120 MHZ		407624444	1	
32MB SIMM 2X16		407701747	1	
PCMCIA SanDisk hard drive 10mb (SanDisk PCMCIA FlashDisk)		407811199	1	
NULL MODEM		H600-258 G-1	2	
INTERNAL DEFINITY RESET CABLE		H600-455 G-1	1	
EXTERNAL CABLE ASSEMBLY Y		H600-475 G-2	1	
MAPD ASSEM KIT & DRAWING		J58890MA1 L-1	1	
D8W Cable		103786828	1	
IDE DISK DRIVE (LAN GW AND CV/LAN PG-5E165)		J58890TL1 L-1	1	
One of the following is selected by the customer:				
MODEM CA 50 FT ED1E434-11G311 (Default)		601001365	1	LNG11 (D)
MODEM CA 20 FT ED1E434-11G311		601087091	1	LNG25
MODEM CA 30 FT ED1E434-11G311		601087109	1	LNG27
MODEM CA 40 FT ED1E434-11G311		601087117	1	LNG28
MODEM CA 10 FT ED1E434-11G311		601087083	1	LNG50
One of the following is selected by the customer:				
116A ISOLATOR DC DEF ONLY		106005242	2	ISO01
NO MATL AC DEFINITY ONLY (Default)		011111111	1	ISO99 (D)
One of the following is selected by the customer:				
Will ship loose YES		011111111	1	WSL01
Will ship loose NO (Default)		011111111	1	WSL02 (D)
(RTU) DEFINITY LAN Gateway Software	1273-LAN	J58890TL1 L-3		
(RTU) CV/LAN SOFTWARE	1273-CVL	J58890TL1 L-4		
ASAI Software Documentation CD-ROM DCMTN-585-246-801 ISSUE 7	700201387	108617002	1	
CV/LAN R6 SPARC CLIENT SFTW		107958407	1	
CV/LAN R6 WIN NT CLIENT SOFTWARE		108107012	1	
US Robotics external modem (33.6K)	2569-839	407-633-999	1	

Description	PEC	Comcode MANF. CODE	QTY	Attribute
104A Connecting Block		103 116 943	1	Must be ordered separately
CVLAN R6 Upgrade to CVLAN R8 provisioned in V6 mode	1273-CVU		1	
Provisions CVLAN R8 Software already installed on the MAPD to V8 mode	1273-CU8		1	Procedure done remotely
CVLAN R8 on a new MAPD provisioned for V8 out of the factory	1273-CV8		1	

Troubleshooting Procedure

D

This appendix contains the following procedures:

- Bringing up the MAPD System
- Solving Terminal Connection Problems
- Solving Connectivity Problems

Contact ASAI post implementation support group of the Technical Support Center (TSC) in the U.S. at 1 800 242-2121.

If these procedures do not solve the problem, contact the Technical Support Center (TSC) in the U.S. at 1 800 242-2121.

If you are a customer outside the U.S., please consult your Avaya vendor.

Bringing up the MAPD System

Use the procedure below if you cannot get a login prompt.

NOTE:
ASAI must be enabled on the DEFINITY Customer Options Form for the system to be fully operational.

1. First check the power, connections, cables, settings, and terminal and /or modem speed if you are connected via a modem. If the modem appears to be locked up, type * @; this may fix the remote access problem.
2. If you still cannot reach the MAPD system, make sure the terminal, cables and/or modem are working properly by testing them at another location (such as the switch SAT).

NOTE:
If the terminal cables and/or modem work correctly at this other location, but the login prompt for MAPD is still not displayed, it may be necessary to dispatch a technician to the site.

Solving Terminal Connection Problems

1. Check all the physical connections.
2. Make sure that the terminal is powered up.
3. Check the following if a modem is being used:
   - Physical connections of the modem
   - Speed settings and other dip switches of the modem
   - The modem is powered up
4. Check the terminal speed settings.
5. Test the terminal on an entirely different system.
6. Test the modem on an entirely different system.
7. If the terminal is still not working, it may be necessary to dispatch a technician to the site.

Solving Connectivity Problems

In general, link connectivity problems can be diagnosed fairly quickly. For clients' ASAI requests to complete successfully, the ISDN BRI link to the DEFINITY system must be up and the application must have TCP connectivity to the CV/LAN server on the MAPD. Release 5.0 of the CV/LAN client software allows the use of the
"asai_test" command over the LAN. To test connectivity to the DEFINITY system through a MAPD with hostname or IP address XYZ over ASAI link "signal01," execute the following command:

```
asai_test XYZ 1
```

The command "asai_test" will be located under /usr/adm/cvlan/bin directory to avoid confusion with the `/usr/bin/asai_test` command that performs a similar test to the switch using the CallVisor ASAI API.

If the asai_test command cannot establish TCP connectivity to the CV/LAN server on the MAPD, the client running the command is probably not administered on the MAPD. A CV/LAN application must be able to readily identify an error via the asai_errval() client API call. If a client cannot connect to the CV/LAN server on the MAPD, the application will retrieve the `C_INVALID_CLIENT` cause. This shows that perhaps the client has not been administered on the MAPD and therefore failed authentication by the CV/LAN server. Contact the MAPD system administrator to add the client to the list of hosts that are allowed to access the system.

If the ISDN BRI link to the switch is down, asai_test cannot send heartbeat to the switch. The CV/LAN application on the MAPD offers a variety of utilities and status screens to diagnose the problem. The recommended procedure is as follows:

1. Log into the MAPD.
2. Access the Screen, "Main Menu (CV/LAN)" in Chapter 3, ''Setting up the MAPD Configuration.''
3. Select the Screen, "Maintenance" in Chapter 3, "Setting up the MAPD Configuration" and then the Screen "System Logs", and note pertinent errors on the link.
4. Select the Screen "CVLAN Port Status/Control" in Chapter 3, ''Setting up the MAPD Configuration.'' Check both the CV/LAN service State and the DEFINITY system Port State. If the DEFINITY system Port State is other than CONNECTED, there is no ISDN connectivity to the switch. Try Busy/Release of the appropriate BRI port on the switch. Then press [UPDATE] button on the CV/LAN Port Status/Control screen.

5. If the DEFINITY system Port State does not change. Reset the link by pressing the STATE button on the “CV/LAN Port Status/Control” Screen. This will reset the protocol stack associated with this particular link.
6. If the problem persists, escalate[1].

1. For additional Troubleshooting Techniques, consult the “CallVisor PC ASAI Installation and Reference.” Avaya support services for the MAPD system will not troubleshoot a customer LAN. If the customer LAN is experiencing difficulties, customers should follow the escalation path supplied by their LAN provider.

Sample Customer Configurations

E

This appendix contains two examples of how a customer might configure a system using CallVisor ASAI PC LAN over MAPD. It requires knowledge of TCP/IP networking. “Example 1. Secure LAN with Defaults,” shows CV/LAN application already administered with default values and client/server requiring administration. “Example 2, Multiple Secure LANs,” shows three different clients of the MAPD system assembly, each on a physically different network from the system assembly. Subnetting may also be used in this example.

A secure LAN is one in which only machines that are known to the network can connect to the network.

Example 1. Secure LAN with Defaults

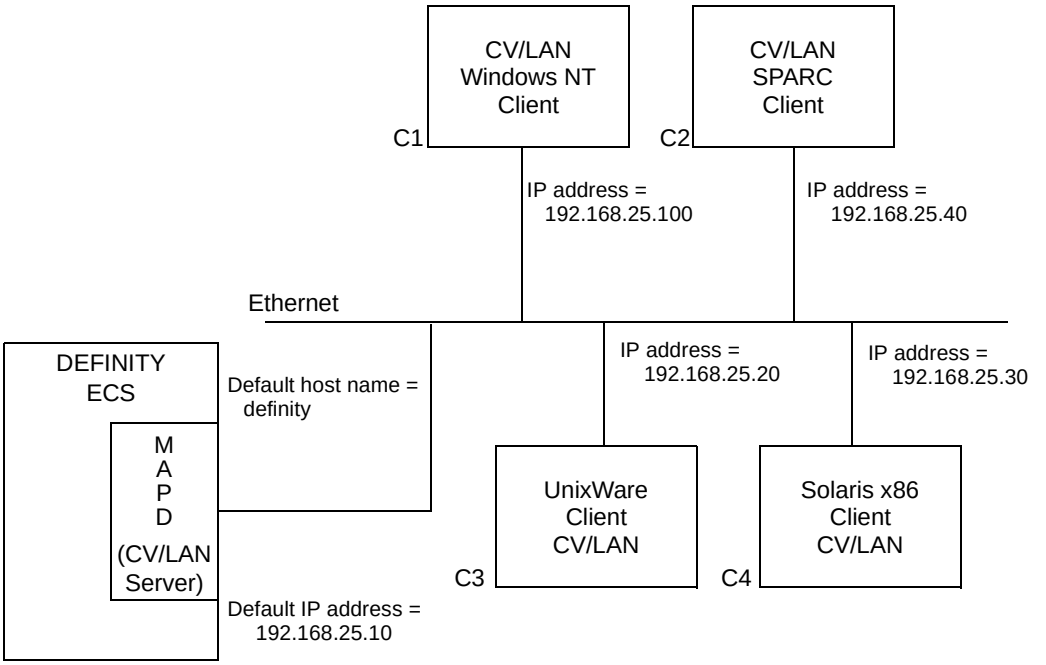

This sample configuration shows the CV/LAN application over MAPD shipped from the factory with defaults already administered (default hostname = *definity* and default IP address = *192.168.25.10)* with the CV/LAN running on the MAPD and four clients, C1, C2, C3, and C4 on the same subnet.

NOTE:
You should add the MAPD system assembly host name (*definity*) and IP address (*192.168.25.10*) to the address resolution mechanism.

Example 2. Multiple Secure LANs

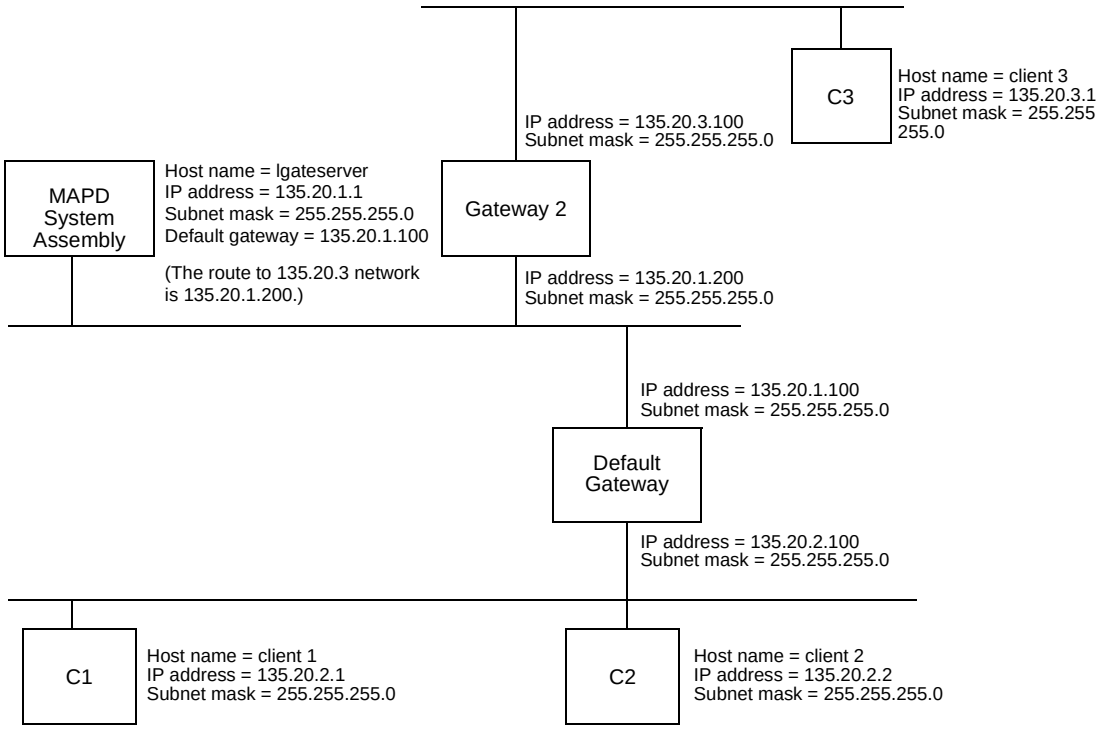

This sample configuration shows the CV/LAN application with different clients on networks physically different from that of the MAPD system assembly. The default gateway leads to clients C1 and C2, and gateway 2 leads to client C3. This sample configuration requires that the CV/LAN application and the clients be administered, as follows:

- Administer the system assembly:
  1. From the Main Menu, choose TCP/IP Administration. Then choose This Host.
     a. Change the host name to a name you have made up (*lgateserver* in this example).
     b. Do the same for the host IP address (*1354.20.1.1* in this example) and, if subnetting is used, the subnet mask *(255.255.255.0* in this example).
  2. From The TCP/IP Administration Main Menu, choose Local Host Table.
     a. Delete the default client.
     b. Press ADD to access the Add Host Screen. Add the host name and IP address for client 1 (C1).

c. Access the Add Host screen again and do the same for clients 2 and 3 (C2 and C3).

d. You will be on the Local Host Table screen when done. Exit the screen to return to the TCP/IP Administration Main Menu.

3. Administer the CV/LAN as follows. On the Main Menu, select CV/LAN Administration.

   a. Delete the default entry.

   b. Press (ADD) to access the Add Client Link screen. Add an entry for client 1 on the appropriate port and client link.

   c. Access the Add Client Link screen again and do the same for clients 2 and 3 (C2 and C3).

   d. You will be on the CV/LAN Administration screen when done. Exit the screen to return to the Main Menu.

4. Reboot the system as follows. On the Main Menu, select Maintenance. Then select Reset System. When the Reset System screen appears, select Reboot System.

5. After the reboot, from the Main Menu, choose TCP/IP Administration. Next choose Network Routing Information, and then choose Network Routing Daemon.

   — Turn the routing daemon **On** if there is a router on the same network as *lgateserver*, which is broadcasting routes to all networks where clients reside.

   — Turn the routing daemon **Off** if there is no router or if manual routes are preferred.

6. If the Network Routing Daemon is **On**, press (CANCEL) to exit from the screen. Exit twice more to return to the Main Menu.

   If the Network Routing Daemon is **Off**, do the following:

   a. Administer the default gateway. Press (CANCEL) on the Network Routing Daemon screen to access the Network Routing Information Main Menu. Select Default Gateway. On this screen, enter the IP address of the default gateway (for this example, enter `135.20.1.100`) and press (ENTER)**.** The Network Routing Information Main Menu reappears.

   b. Select Network Routing Table and then press (ADD) to access the Add Routes screen. Administer gateway 2 on this screen.

      For this example, you would enter:

DESTINATION	**TYPE**	**GATEWAY**
`135.20.3`	`NETWORK`	`135.20.1.200`

      When you press (ENTER), the Network Routing Table screen reappears. Exit until you reach the Main Menu.

- Administration of Each Client (C1, C2, and C3):
  1. Administer the client name, IP address, and subnet mask (if not already done).
  2. Add the MAPD system assembly (*lgateserver* in this example) to the address resolution mechanism.
  3. Administer the routes for the clients to reach the MAPD system assembly.

Returning the MAPD System to its Original State

F

WARNING:

This procedure should only be performed by a Avaya services technician.

After using this procedure, you must reconfigure the MAPD applications or restore the configuration parameters from the backup SanDisk PCMCIA FlashDisk.

This procedure describes how to return the MAPD (with its associated applications) to its original state if it should crash.

1. Make sure the administrative and/or maintenance terminal is physically connected (either directly or through a modem) to Maint/Port A on the TN801B board.
2. Power down the MAPD system assembly by disengaging it from the DEFINITY system carrier.
3. Insert the PCMCIA Installation disk into the TN801B, and re-insert the MAPD system assembly.
4. When the system is coming up, the terminal screen displays a message similar to the following:

```
                    Avaya

                    Copyright (C) 1985-1989 Phoenix Technologies Ltd.
                    Copyright (C) 1996 Texas Microsystems, Inc.
                    All Rights Reserved

The P5120C 120 MHz Industrial Computer BIOS, Version 4.28.MAP-D 1.4
640K Base, 031744K Extended, 256K External Cache

PCMCIA drive   - Calluna Technology CT260MC 247Mb
PCMCIA drive bootable...<CTRL-C> twice for PCMCIA boot.

                                        .
                                        .
                                        .
```

NOTE:
The PC memory test can be aborted by pressing the SPACE key while it is running.

5. Boot from the PCMCIA Disk by pressing CTRL C twice in quick succession when you see the *`PCMCIA drive bootable`*... line appear on the screen.

WARNING:
*Once the **`PCMCIA boot drive bootable`**... line appears on the screen, you only have 5 seconds to enter the CTRL C sequence. If you fail to enter it in time, you must reset the system (either by power down, reboot, or through the remote maintenance interface) to attempt again.*

At this point, the system will boot from the PCMCIA Disk, and a screen similar to the following appears

```
Booting UnixWare...

UnixWare 2.1.2 for the Intel386(tm) Family

Copyright 1984-1995 Novell, Inc., 1996 The Santa Cruz Operation, Inc.
All Rights Reserved.

TN800 driver (mapdmux) - Version 0.1
MAINT DRIVER INIT
RMB DRIVER INIT
0:0,7,0: HBA          : (ide,1) Generic ESDI/IDE/ATA
  0,0,0: DISK         : Generic IDE/ESDI        1.00
1:0,7,0: HBA          : (ide,2) Generic ESDI/IDE/ATA
  0,0,0: DISK         : Generic IDE/ESDI        1.00

                                        .
                                        .
                                        .
```

NOTE:
If the screen shows LynnSoft PC Card Software loaded, then you did not successfully boot from the PCMCIA Disk. In this case, you must reset (either by power down, reboot, or through the remote maintenance interface) and attempt again.

The login prompt appears when the system has finished rebooting.

NOTE:
When the system is rebooted, the console will be reset while the firmware is downloaded. The download process should take less then 30 seconds after the initial login prompt is displayed. Press the RETURN key to display the login prompt again.

```
Welcome to UnixWare 2.1.2
The system's name is definity.

Console Login:


TN800 MAPD Remote Maintenance Port
defaults are:
LCP: 9600 8N1   COM2: 9600 8N1
RMP: 9600 8N1   COM1: 9600 8N1




TN800 MAPD Remote Maintenance Port
defaults are:
LCP: 9600 8N1   COM2: 9600 8N1
RMP: 9600 8N1   COM1: 9600 8N1
```

6. Press RETURN to display the login prompt, and login as `root` with the default root password.
7. Type `installIDE` to recreate the IDE disk image. This process will take place approximately 8 to 10 minutes.

NOTE:
If the installation script detects the presence of UNIX already on the IDE disk, it will prompt you for confirmation before over-writing it. If you proceed, all of the original contents on the IDE disk will be lost.

8. Shutdown the system, by typing `shutdown -g0 -y`. A screen similar to the following will appear:

```
# shutdown -g0 -y
UX:shutdown: INFO:
Shutdown started.       Wed Sept 24 13:46:28 EST 1997

# UX:init: INFO: New run level: 0
UX:/sbin/rc0: INFO: The system is coming down.  Please wait.
UX:K00ANNOUNCE: INFO: System services are now being stopped.

Press any key to reboot...
```

9. Remove the PCMCIA installation disk, and insert the customer's backup SanDisk PCMCIA FlashDisk.
10. Press any key to reboot the system, and boot from the internal IDE disk (for example, do **NOT** enter the CTRL C sequence this time).
11. At the login prompt, login with the services login (default password) and become root with `su - root`.
12. If the DEFINITY LAN Gateway application needs to be installed, type

    `pkgadd -n DLGset`

NOTE:
Before loading the DEFINITY LAN Gateway application, verify that the customer has purchased it.

13. If the CV/LAN application needs to be installed, type

    `pkgadd -n cvlan`.

NOTE:
Before loading the CV/LAN application, verify that the customer has purchased it.

14. Evoke the screens by typing `eth_oam`.

15. Restore the customer's system configuration from the backup SanDisk PCMCIA FlashDisk using the following menu steps:
    - Select "Maintenance" from the Main Menu.
    - Select "Removable Media Operations" from the Maintenance Menu.
    - Select `Restore Configuration Data` from Removable Media Operations.
16. After the customer's system configuration is restored, reboot the system:
    - Return to the "Maintenance" Menu.
    - Select "Reset System (CV/LAN).
    - Select `Reboot System`.

NOTE:
If the CV/LAN application was installed, the UNIX kernel will be rebuilt when the system is shut down. This will take several minutes. In addition, when the system is coming up, a new kernel environment will be setup, which may also take a few minutes.

17. Following the reboot, have the customer log in at the login prompt.

Project Manager Worksheet

G

This appendix contains a worksheet for the Avaya Project Manager for providing assistance in the customer installation. The on-site system technician uses the networking information on this worksheet during installation.

Worksheet G-1 Gather Networking Information

Date _____

Prepared By _____

Contact Telephone Number _____

The basic LAN addressing information you supply here will be used by the on-site Avaya Service technician during installation.

Field	Default	Desired
TCP/IP Address		
Subnet Mask		
Default Gateway IP Address		

NOTE:
All three addresses appear in the form *nnn.nnn.nnn.nnn*, where each *nnn* can be a number between 0 and 255.

Upgrading the MAPD System

H

WARNING:
This procedure should only be performed by a Avaya services technician.

This procedure describes how to upgrade the MAPD System (with its associated applications) with new software.

1. Make sure the administrative and/or maintenance terminal is physically connected (either directly or through a modem) to Maint/Port A on the TN801B board.
2. Make sure the customer's backup SanDisk PCMCIA FlashDisk is inserted in the TN801B board. If it is not, shut down the system, insert it, and reboot the system.
3. Log onto the MAPD System with the "services" login and evoke the screens by typing `eth_oam`.
4. Save the customer's system configuration on the backup SanDisk PCMCIA FlashDisk using the following menu steps:
   - Select "Maintenance" from the Main Menu
   - Select "Removable Media Operations" from the Maintenance Menu.
   - Finally, select `Save Configuration Data to Removable Media`.

5. After the configuration data is saved, shut down the system:
   - Return to “Maintenance” Menu.
   - Select “Reset System (CV/LAN.)”
   - Select `Shutdown`.

A screen similar to the following is displayed:

```
processing....



UX:init: INFO: New run level: 0
UX:/sbin/rc0: INFO: The system is coming down.  Please wait.
UX:K00ANNOUNCE: INFO: System services are now being stopped.

Press any key to reboot...
```

6. Remove the customer’s backup SanDisk PCMCIA FlashDisk and insert PCMCIA Installation disk into the TN801B board (the top of the disk should be facing left), and then press any key to reboot.
7. When the system is coming up, the terminal screen displays a message similar to the following:

```
                    Avaya

                    Copyright (C) 1985-1989 Phoenix Technologies Ltd.
                    Copyright (C) 1996 Texas Microsystems, Inc.
                    All Rights Reserved

The P5120C 120 MHz Industrial Computer BIOS, Version 4.28.MAP-D 1.4
640K Base, 031744K Extended, 256K External Cache

PCMCIA drive   - Calluna Technology CT260MC 247Mb
PCMCIA drive bootable...<CTRL-C> twice for PCMCIA boot.

                                          .
                                          .
                                          .
```

NOTE:
The PC memory test can be aborted by pressing the SPACE key while it is running.

8. Boot from the PCMCIA Disk by pressing CTRL C twice in quick succession when you see the **`PCMCIA drive bootable`** line appear on the screen.

WARNING:
*Once the **`PCMCIA drive bootable`** line appears on the screen, you only have 5 seconds to enter the CTRL C sequence. If you fail to enter it in time, you must reset the system (either by power down, reboot, or through the remote maintenance interface) to attempt again.*

At this point, the system will boot from the PCMCIA Disk, and a screen similar to the following appears:

```
Booting UnixWare...
UnixWare 2.1.2 for the Intel386(tm) Family

Copyright 1984-1995 Novell, Inc., 1996 The Santa Cruz Operation, Inc.
All Rights Reserved.

TN800 driver (mapdmux) - Version 0.1
MAINT DRIVER INIT
RMB DRIVER INIT
0:0,7,0: HBA          : (ide,1) Generic ESDI/IDE/ATA
  0,0,0: DISK         : Generic IDE/ESDI        1.00
1:0,7,0: HBA          : (ide,2) Generic ESDI/IDE/ATA
  0,0,0: DISK         : Generic IDE/ESDI        1.00

                                    .
                                    .
                                    .
```

NOTE:
If the screen shows LynnSoft PC Card Software loaded (see the following screen), then you did not successfully boot from the PCMCIA Disk. In this case, you must reset the system (either by power down, reboot, or through the remote maintenance interface) and attempt again.

The login prompt appears when the system has finished rebooting.

NOTE:
When the system is rebooted, the console will be reset while the firmware is downloaded. The download process should take less than 30 seconds after the initial login prompt is displayed. Press the RETURN key to display the login prompt again.

```
Welcome to UnixWare 2.1.2
The system's name is definity.

Console Login:


TN800 MAPD Remote Maintenance Port
defaults are:
LCP: 9600 8N1   COM2: 9600 8N1
RMP: 9600 8N1   COM1: 9600 8N1




TN800 MAPD Remote Maintenance Port
defaults are:
LCP: 9600 8N1   COM2: 9600 8N1
RMP: 9600 8N1   COM1: 9600 8N1
```

9. Press [RETURN] to display the login prompt and login as `root` with the default root password.
10. Type `installIDE` to recreate the IDE disk image. This process will take approximately 8 to 10 minutes.

NOTE:
If the installation script detects the presence of UNIX already on the IDE disk, it will prompt you for confirmation before over-writing it. If you proceed, all the original contents on the IDE disk will be lost.

11. Shut down the system by typing `shutdown -g0 -y`. A screen similar to the following will appear:

```
# shutdown -g0 -y
UX:shutdown: INFO:
Shutdown started.       Wed Sept 24 13:46:28 EST 1997

# UX:init: INFO: New run level: 0
UX:/sbin/rc0: INFO: The system is coming down.  Please wait.
UX:K00ANNOUNCE: INFO: System services are now being stopped.

Press any key to reboot...
```

12. Remove the PCMCIA installation disk, and insert the customer's backup SanDisk PCMCIA FlashDisk.
13. Press any key to reboot the system, and boot from the internal IDE disk (do **NOT** enter the [CTRL] [C] sequence this time).

14. At the login prompt, login with the services login (default password) and become root with `su - root`.
15. To install the DEFINITY LAN Gateway application, type

    `pkgadd-n DLGset`.

NOTE:
Before loading the CV/LAN application, verify that the customer has purchased it.

16. If the CV/LAN application needs to be installed, type

    pkgadd -n cvlan.

NOTE:
Before loading the CV/LAN application, verify that the customer has purchased it.

17. Evoke the screens by typing `eth_oam`.
18. Restore the customer's system configuration from the backup SanDisk PCMCIA FlashDisk using the following menu steps:
    - Select "Maintenance" from the Main Menu.
    - Select "Removable Media Operations" from the Maintenance Menu.
    - Select `Restore Configuration Data` from Removable Media.
19. After the customer's system configuration is restored, reboot the system.
    - Return to the "Maintenance"
    - Select "Reset System (CV/LAN.)"
    - Select `Reboot System`.

NOTE:
If the CV/LAN application was installed, the UNIX kernel will be rebuilt when the system is shut down. This will take several minutes. In addition, when the system is coming up, a new kernel environment will be setup which may also take a few minutes.

20. Following the reboot, have the customer log in at the login prompt.

Network Latency Requirements on LAN/WAN Connections from a CTI Server to the MAPD

I

This section describes the network latency requirements, on the customer's network, needed to support CTI links over a LAN/WAN. These are links, connected via a LAN/WAN, between the CTI platform server machine and the MAPD (or LAN Gateway) in a DEFINITY ECS.

1. No more than a 200 ms average round trip packet delivery time as measured with "ping" over every one hour time period.
2. Periodic spiked delays of no more than five seconds while maintaining the 200 ms average round trip delivery time as measured with "ping" over every one hour time period.

These requirements are needed to maintain the CTI link over a LAN/WAN.

Vectors with "adjunct route" steps to the CTI server are connected over this LAN/WAN link.

If the switch is going to issue route requests, then the associated "wait" step must always have a value greater then the largest periodic spiked delay. With a maximum of five seconds allowed (as stated above), your "wait" step should be greater than five seconds. If you can guarantee periodic spiked delays less than five seconds, you can reduce the "wait" step time out accordingly.

If no response to a route select is received by the switch, the call will follow the remaining vector steps in this specific vector. In other words, you should program the vector to deal with the possibility that the "adjunct route" step might time out.

MAPD Price Element Code Descriptions

J

PEC Descriptions

This section describes the current set of existing and new Price Element Codes for the MAPD.

Existing PECs

The following PECs already exist. After the GA cut over for the TN801B V5 MAPD, these PECs will reference the new hardware and software.

- **1273-cvl**

  CVLAN Server release 8.2, provisioned in V6 mode

- **1273-lan**

  DLG release 2.0, Issue 2.03

- **1273-mpd**

  TN801B V5

New PECs

These are the new PECs that have been created for the CVLAN Server release 8.2 on the MAPD.

- **1273-cvu**

  MAPD CVLAN upgrade PEC; to upgrade CVLAN R6.x to CVLAN R8.2 V6

- **1273-cu8**

  MAPD CVLAN upgrade PEC; to upgrade CVLAN R8.2 V6 to CVLAN R8.2 V8

- **1273-cv8**

  Factory provisioned MAPD CVLAN R8.2 V8

Following is a full description of these new PECs:

1273-cvu

Used to upgrade the CVLAN Server release 6.x on all vintage MAPD hardware currently installed at all locations to CVLAN Server release 8.2 provisioned in V6 mode. The DLG software is also upgraded. This upgrade requires a site visit by an Avaya Remote Field Engineer (RFE). This PEC only applies to MAPDs currently installed at the customer's site. It requires an Avaya RFE to bring the MAPD upgrade disk into the customer's location and physically insert it into the MAPD. The RFE then calls the Technical Support Center (TSC,) and the TSC engineer dials up this MAPD and performs the upgrade procedure. This is the same upgrade procedure used by the RFE and TSC, in place today, to upgrade the MAPD from CVLAN Server release 6.0.4 to CVLAN Server release 6.1.0.

This PEC code will also be used as a bug fix release for CVLAN release 6.1.0.

Feature enhancements available upgrading the MAPD from CVLAN Server release 6.x to CVLAN Server release 8.2 provisioned in V6 Mode, PEC 1273-cvu.

These are the same set of features available on a factory provisioned MAPD configured with CVLAN Server release 8.2 in V6 Mode, PEC 1273-cvl.

Features available to CVLAN applications independent of the CVLAN Client release.

Upgrading the CVLAN Server on the MAPD to CVLAN Server release 8.2 presents several feature enhancements to the MAPD and CVLAN applications. Certain application feature enhancements are only recognized using the CVLAN Client release 8.2 API set available in the CVLAN Client release 8.2 package. The features listed below are not dependent on using the CVLAN Client release 8.2 package. These following feature enhancements are recognized regardless of which CVLAN Client release is in use. In other words, the following feature enhancements are recognized using either CVLAN Client release 6.1 or 8.2.

- CVLAN per link ASAI association limit increase to 4096

  This upgrade will increase the CVLAN per link ASAI association limit from 2048 to 4096. These ASAI associations are used for Call Control and Domain Control of DEFINITY switch resources.

- Customer accessible CVLAN ASAI message tracing utility

  This upgrade will enhance the MAPD with a customer accessible CVLAN ASAI message tracing utility. This CVLAN ASAI message tracing utility fully supports the ASAI message protocol used in all versions of the DEFINITY switch. It is the only Avaya tool, available today, which will properly decode the full set of ASAI protocol messages used in all DEFINITY switches currently in production. It is only available when PEC 1273-cvl or 1273-cvu (CVLAN RTU) is ordered for the MAPD.

- ASAI Performance Measurement Utilities – only accessible to Avaya Technical Support staff.

  This upgrade will enhance the MAPD platform to provide an ASAI performance measurement utility over DLG and CVLAN links. This utility is used to measure and monitor the ASAI message rates through the MAPD. In addition to viewing the real time ASAI message rates, this utility can be used to store up to 20 occurrences per MAPD port (all 12), that exceed a pre-administered ASAI message rate threshold from the application to the switch.

Features available to CVLAN applications using CVLAN Client release 8.2 or greater.

Upgrading the CVLAN Server on the MAPD to CVLAN Server release 8.2 presents several feature enhancements to the MAPD and applications. Certain application feature enhancements are only recognized using the CVLAN Client release 8.2 API set available in the CVLAN Client release 8.2 package. The features listed below are dependent on using the CVLAN Client release 8.2 package. These following feature enhancements are only passed to CVLAN applications using CVLAN Client release 8.2 or greater.

The following ASAI features implemented in DEFINITY release 8.x and greater are supported by the CVLAN release 8.2 API. The CVLAN Client release 8.2 API set is available starting in CVLAN Client release 8.2. CVLAN applications must be developed and run with CVLAN Client release 8.2 or greater to gain access to the following feature enhancements. As stated above, these features require the MAPD to be running CVLAN Server release 8.2 provisioned in V6 or V8 mode.

- Pending Work Mode Changes

  This feature provides ASAI applications with the capability to change the current work mode of an agent, while the agent is busy (currently on a call). The "pending change" takes effect as soon as all active or held calls at this agent’s extension are cleared. Value Query responses for agent status that have a pending work mode change will include a new pending work mode change IE indicating the pending work mode which will take effect after the current call is ended.

- Trunk Group Information and Calling Party Number in Event Reports

  Starting with R8, ASAI provides both trunk group information (trunk group number and trunk member number) and Calling Party Number information (if this information is available) to adjunct applications. Calling Party Number and trunk group information is no longer mutually exclusive. This enhancement provides the user with trunk group information in addition to the Calling Party Number (CPN), even if the CPN is known.

  In previous releases, trunk group information was provided only if the CPN was not known, and it was only provided for inbound calls. Starting with R8, trunk information is provided for inbound and outbound calls (including DCS calls) and switch-classified calls.

- Starting with R8, a list of up to five trunk IDs is also provided in the conference and transfer events and in the third party merge acknowledgment.

1273-cu8

Used to provision the CVLAN Server release 8.2 software already installed on the MAPD to V8 mode. This procedure is done remotely by the TSC on MAPD systems running CVLAN Server release 8.2 provisioned in V6 mode, which are currently installed, at the customer's site.

1273-cv8

This PEC is used to order the new CVLAN Server release 8.2 on a new MAPD provisioned for V8 mode out of the factory. This PEC will describe a factory procedure for loading 1273-cvl and then how to provision CVLAN R8.2 on the MAPD for V8 mode.

Feature Enhancements with this upgrade (1273-cu8) or factory order (1273-cv8)

In addition to the feature enhancements gained from upgrading the MAPD from CVLAN Server release 6.x to CVLAN Server release 8.2 in V6 mode, the following additional feature enhancements are included when provisioning the CVLAN Server release 8.2 on the MAPD from V6 mode to V8 mode.

Features available to CVLAN applications independent of the CVLAN Client release.

Upgrading the CVLAN Server release 8.2 on the MAPD to run in V8 mode presents several feature enhancements to CVLAN applications. Certain application feature enhancements are only recognized using the CVLAN Client release 8.2 API set available in the CVLAN Client release 8.2 package. The feature listed below is not dependent on using the CVLAN Client release 8.2 package.

The following feature enhancement is recognized by CVLAN applications using CVLAN Client release 6.1 or 8.2.

- Increased Number of Active Adjunct Route Requests

  Beginning with DEFINITY R8, the ECS will allow an increased number of outstanding (unacknowledged) Route Request messages. Prior to release 8, outstanding Route Requests were limited to 126. In release 8, the DEFINITY G3R will allow up to 2000 outstanding route requests and the G3I/G3SI will allow up to 300 outstanding route requests. The increased adjunct route requests are available only on DEFINITY systems administered as V8, enabled with ASAI Link Version 4, and CRV lengths administered as 2 bytes.

Features available to CVLAN applications using CVLAN Client API 8.2 or greater.

The following ASAI feature implemented in DEFINITY release 8.x and greater is supported by the CVLAN Client release 8.2 API set available in the CVLAN Client release 8.2 package. CVLAN applications must be developed and run with CVLAN Client release 8.2 or greater to gain access to the following feature enhancement. As stated above, the following feature requires the MAPD is running the CVLAN Server release 8.2 provisioned in V8 mode.

- Increased Size of the User to User Information (UUI) Field from 32 bytes to 96 bytes.

  Starting with release 8, ASAI supports sending up to 96 bytes of user to user information (UUI). Prior to release 8, ASAI supported a maximum of 32 bytes of UUI. For event reporting, ASAI supports up to 96 bytes if the DEFINITY version is release 8 and the link version is 4 or above. Otherwise, the UUI provided in event reports is truncated to 32 bytes.

PECs and Corresponding SAP Codes

Following are the new and existing PECodes and their corresponding SAP codes:

PECodes	SAP Codes
1273-cvl	SAP 107814
1273-lan	SAP 108917
1273-mpd	SAP 112320
1273-cvu	SAP 173727
1273-cu8	SAP 173728
1273-cv8	SAP 173729

CVLAN Feature Matrix

The following is a MAPD CVLAN Server and CVLAN Client feature and compatibility matrix. This matrix should be used to determine the correct CVLAN client version and MAPD CVLAN Server provisioned mode (V6 or V8) required to achieve the desired set of ASAI features for your specific CVLAN configuration.

CVLAN Client Release	MAPD CVLAN Server Release 8.2.1 Provisioned in V6 Mode	MAPD CVLAN Server Release 8.2.1 Provisioned in V8 Mode
CVLAN Client Release 6.1.6 or earlier	■ CVLAN per link ASAI association limit increase to 4096 ■ Customer accessible CVLAN ASAI message tracing utility ■ ASAI Performance Measurement Utilities	■ Not Compatible
CVLAN Client Release 6.1.7	■ CVLAN per link ASAI association limit increase to 4096 ■ Customer accessible CVLAN ASAI message tracing utility ■ ASAI Performance Measurement Utilities	■ CVLAN per link ASAI association limit increase to 4096 ■ Customer accessible CVLAN ASAI message tracing utility ■ ASAI Performance Measurement Utilities ■ Increased Number of Active Adjunct Route Requests
CVLAN Client Release 8.2.1 or greater	■ CVLAN per link ASAI association limit increase to 4096 ■ Customer accessible CVLAN ASAI message tracing utility ■ ASAI Performance Measurement Utilities ■ Pending Work Mode Changes ■ Trunk Group Information and Calling Party Number in Event Reports	■ CVLAN per link ASAI association limit increase to 4096 ■ Customer accessible CVLAN ASAI message tracing utility ■ ASAI Performance Measurement Utilities ■ Increased Number of Active Adjunct Route Requests ■ Pending Work Mode Changes ■ Trunk Group Information and Calling Party Number in Event Reports ■ Increase of the User to User Information (UUI) Field from 32 bytes to 96 bytes.

Glossary

Numeric

10Base-T
A network baseband medium that uses twisted pair wire and operates at 10MB per second.

A

Adjunct
See **Application**.

Administration
The process of setting up a system (such as a switch so that it will function as desired. Options and defaults are normally set up (translated) by the system administrator or by remote services personnel.

Alarms
Hardware, software, or environmental problems that may affect system operation. These faults are classified as major, minor, warning, or critical. They are recorded into an alarm log which can be accessed either locally or remotely on a terminal connected to the system.

API
Application Programming Interface. A set of functions and data items that allow a programmer to define an application to a particular interface.

Application
A process on a client computer that requests and receives ASAI services and capabilities through a program library or network service. The terms *application* and *adjunct* are sometimes used interchangeably. *See also* **ASAI Application**.

Adjunct Switch Application Interface (ASAI)

1. The Avaya recommendation for Computer Telephony Integration (CTI) based on the CCITT Q.932 protocol.
2. An option on the DEFINITY Enterprise Communications Server (ECS) that enables the ASAI messaging interface. Also called CallVisor ASAI.

Adjunct Services Application Interface (ASAI).
A messaging interface between the switch and an Adjunct Processor (AP) that allows the AP to perform call monitoring and control functions.

ASAI application
An application running on an ASAI client computer written to request service of a library that provides direct access to ASAI messages. *See also* **Application**.

Adjunct Services Application Interface (ASAI) link
An ISDN BRI or Ethernet interface configured to support ASAI.

ASAI Port
A logically unique access for ASAI services from the DEFINITY system. This port is differentiated via an extension number and via a physical port number assignment.

B

Basic Rate Interface (BRI)
One of two interfaces within ISDN, the other being PRI. BRI provides two bearer B-channels at 64 KB per second and a data D-channel at 16 KB per second. The bearer B-channels are designed for PCM (pulse code modulation) voice, video conferencing, group 4 fax machines, etc., while the data D-channel function is to bring in information about incoming calls and take out information about outgoing calls.

Baun
On the DEFINITY LAN Gateway connection, the adapter needed to connect the twisted-pair breakout cable to the coaxial building wire distribution system.

BIOS
Basic Input Output System. Firmware resident in a PC system which maps a given hardware realization into a standardized software interface (interrupts, I/O addresses, etc.) and which also provides for diagnostic and testing functions for the hardware including testing of peripheral devices.

BIST
Built in Self Test. Functions available in some device designs which allow the said devices to self test.

Boot
The operation to start a computer system by loading programs from disk to main memory (booting is part of system initialization).

Bridge
A router that connects two or more networks and forwards packets among them. Usually, bridges operate at the physical network level, for example, an Ethernet bridge connects two physical Ethernet cables and forwards from one cable to the other exactly those packets that are not local. Bridges differ from repeaters because bridges store and forward complete packets while repeaters forward electrical signals. *See* **BRouter**.

Brouter
Bridge/Router. In local area networking, a device that combines the dynamic routing capability of an internetwork **router** with the ability of a **bridge** to interconnect dissimilar LANs. It has the ability to route one or more protocols and bridge all other traffic. The DEFINITY LAN Gateway application links ISDN and TCP/IP at both a physical and addressing level. *See* **bridge** and **router**.

Business Communications Terminal (BCT)
The recommended terminal for system maintenance and administration.

C

Call Reference Value (CRV)
An identifier present in ISDN messages that associates a related sequence of messages. In ASAI, the CRVs distinguish between associations.

Circuit Pack
A card on which electrical circuits are printed, and integrated circuit (IC) chips, and electrical components are installed. A circuit pack is installed in a switch carrier.

CISPR
International Special Committee on Radio Interference. Cross-European committee that specifies regulatory standards for its European member states.

Client
For the DEFINITY LAN Gateway, a computer which is a consumer of ASAI service. User of services provided by a server.

Configuration
The combination of hardware and software that defines a computer or telecommunications system and also determines how it will operate.

CPU card
Passive-bus self-contained PC subsystem (iX86 processors) derived from a third party vendor (for example, Radiuses or Texas Micro, Inc.) which includes DRAM sockets, industry standard 16-bit ISA and 32-bit PCI bus interfaces, serial and parallel port interfaces, IDE (and possibly SCSI) peripheral interfaces, and possibly 10Base-T interfaces in an industry standard PC expansion card form factor.

Craft login
The Avaya login used by Avaya technicians during the installation and initialization of ASAI over the DEFINITY LAN Gateway system.

CV/LAN
CallVisor ASAI PC Local Area Network.

D

Data Terminal Equipment (DTE)
Equipment consisting of the endpoints in a connection over a data circuit. For example, in a connection between a data terminal and a host, the terminal, the host, and their associated modems make up the DTE. DTE usually consists of the following functional units: control logic, buffer store, and one or more input or output devices or computers. DTE can contain error control, synchronization, and telephone-identification capabilities.

DCE
Data Communications Equipment.

DCIU
Data Communications Interface Unit. Generic term for X.25 & BX.25 data communications path between an Avaya DEFINITY or System 85PBX and an adjunct processor.

Default
An alternative value, attribute or option that is assumed by the system when none has been specified by the user.

DEFINITY LAN Gateway (DLG)
An application that currently resides on the MAPD and provides a function of tunneling ASAI messages into IP packets for transport between a customer's CTI server and the DEFINITY system.

Diagnostics
Programs that run on the computer part of the PBX to check for actual as well as potential faults and problems in the system. Diagnostics normally run automatically at pre-defined intervals.

Disk Drive
A mechanical device that stores data on and retrieves data from one or more disks.

DRAM
Dynamic Random Access Memory. Memory used on the Passive Bus CPU Card.

E

Electronics Industries Association (EIA)
A trade association of the electronics industry that establishes electrical and functional standards.

ESAI
Ethernet-Switch Application Interface. *Also see* Ethernet.

ESD
ElectroStatic Discharge. Discharge of electrons from foreign bodies (for example, service personnel) into a board for which board design must include protection measures to avoid damage on ESD discharges.

Ethernet
A local area network that connects computers, printers, workstations, terminals etc. within the same building. Ethernet operates over twisted wire and over coaxial cable at speeds up to 10 mbps. For LAN interconnections, Ethernet is a physical link and data link protocol.

F

FCC
Federal Communication Commission. U.S. regulatory body which dictates Part 15 (radiated emissions) and Part 68 (conducted emission) requirements on telephony equipment.

Firmware
Software stored in a ROM/PROM/EPROM/EEPROM FLASHROM to operate a control application.

FLASH Memory
Non-volatile memory used in the platform on the TN Parent Board and on the Passive Bus CPU card to preserve memory contents on loss of power. Contents alterable under software control.

Flashware
Software stored in a Flash PROM.

G

G3MT
G3 Management Terminal. It is also known as System Access Terminal (SAT). The primary craftsperson interface into a DEFINITY system for administrative and maintenance functions.

H

HDD
Hard Disk Drive.

Heartbeat Indication
The status of the MAPD is indicated by two flashing buttons that appear on the faceplate panel LCD of the system assembly.

Host
A computer, connected to a network, that processes data from data-entry devices.

I

IDE
Generic PC standard for interconnection of media devices to the PC motherboard.

Initialization
The process of bringing a system to a predetermined operational state. The start-up procedure tests hardware and flashware; loads the boot file system programs, and locates, mounts, and opens other required file systems; and starts normal service.

Integrated Services Digital Network (ISDN)
A public or private network that provides end-to-end digital communications for all services to which users have access by a limited set of standard multipurpose user-network interfaces defined by the CCITT. Through internationally accepted standard interfaces, ISDN provides digital circuit-switched or packet-switched communications within the network and links to other ISDNs to provide national and international digital communications.

Internet Control Message Protocol (ICMP)
A standard that provides several diagnostic functions and can send error packets to hosts. ICMP uses the basic support of IP and is an integral part of IP.

Internet Protocol (IP)
IP is a part of the TCP/IP family of protocols that describes software that tracks the Internet address of nodes, routes outgoing messages, and recognizes incoming messages. In a gateway, IP connects networks at OSI network Level 3 and above.

I/O
Input/Output. Two contexts: I/O functions on processor busses, and for the MAPD platform, accesses to tip/ring type functions (for example, 10Base-T access) via the 50 pin designated space in port carrier hardware.

ISA
Industry Standard Architecture.

L

LAN Interface

In MAPD, an interface which conforms to all applicable IEEE standards for 10Base-T (10 Mb/sec Baseband Twisted Pair) LANs.

LAN printing
Printing to a network print server or to a printer that exists as a network node.

Light Emitting Diode (LED)
A red-light indicator on the panel of the system faceplate that shows the status of operations and possible fault conditions. An unlit LED indicates a healthy system. When flashing, the LED indicates a software problem. When the LED is steadily lit, a hardware problem exists.

Liquid Crystal Display (LCD)
The 10-character alphanumeric display on the faceplate panel of the DEFINITY LAN that automatically shows the status of the system including alarms.

Link
See **Adjunct Switch Application Interface link.**

Local Area Network (LAN)
A networking arrangement designed for a limited geographical area. Generally, a LAN is limited in range to a maximum of 6.2 miles and provides high-speed carrier service with low error rates.

Login
A unique code that identifies and authenticates a user to the system.

M

MAC
Media Access Control. Data-link layer protocol that governs access to transmission media.

MCU
Multi-Point Control Unit

MAPD
DEFINITY Multi-Application Platform is an open platform which allows direct integration of applications into the DEFINITY product line and which also provides integrated connectivity to 10Base-T legacy LANs. The platform is also known as the DEFINITY LAN Platform. The platform allows leveraging third party hardware and software for applications across BCS.

MFB
Multi-Function Board. A sandwich board, actually comprised of two circuit boards, TN 566 and TN2170. The MFB is used for DEFINITY AUDIX and DEFINITY LAN Gateway applications and can be viewed as the predecessor of the MAPD.

Modem
MOdulator-DEModulator. A device that converts digital signals to analog signals for transmission across telephone circuits. The analog signals are converted back to the original digital data signals by another modem at the other end of the circuit.

N

NVRAM
Non-Volatile Random Access Memory that retains data even when the power is lost.

O

Operating System
The set of programs that runs the hardware and interprets the software commands.

Operations, Administration, and Maintenance (OAM)
A state of system operation where the core processes of the multifunction board are accessed, including system initialization, resource configuration, forms interface, entry into the maintenance subsystem, and file system access.

P

PCI
Peripheral Component Interconnect. A local bus technology that allows SCSI host adapters, video cards, and other peripherals to send data directly to and receive data directly from the CPU.

PCMCIA Devices
Personal Computer Memory Card International Association Devices. These devices include FLASH memory, hard drives, tape drives, LAN interfaces, Modems, etc. which are available from third party vendors in standardized small form factors.

Ping
A program that is used to test and debug networks. It sends an ICMP Echo packet to a specified host and waits for a response. It reports on the success or failure of its operation as well as associated statistics that accompany the test.

R

Reboot
A system reboot clears major system problems (such as the corruption of program memory). It also runs automatically whenever the system is powered up.

Router
Any machine responsible for making decisions about which of the several paths the network (or Internet) traffic will follow. At the lowest level, a physical network bridge is a router because it chooses whether to pass packets from one physical wire to another. Within a long haul network, each individual packet switch is a router because it chooses routes for individual packets. In the Internet, each IP gateway is a router because it uses IP destination addresses to choose routes. *See* **Brouter**.

S

SAT
System Access Terminal. The primary craftsperson interface into a DEFINITY System for administrative and maintenance functions.

Shutdown States
States of system operation where either a technician can shut down the system for maintenance, or where a critical error condition brings down the system. In either case, file systems are closed and the system can be powered down and removed from the carrier.

T

TCP/IP Port
Transmission Control Protocol/Internetworking Protocol. A numbered access “subaddress” for an IP address that usually indicates the service or application that is desired to engage in a communications session.

Technical Service Center
The Tier 3 services group who remotely maintains and diagnoses a MAPD system using a set of forms generated on a computer terminal.

Telnet
The TCP/IP protocol governing the exchange of character-oriented terminal data. Also, the process by which a person using one computer can sign on to a computer in another city, state, or country. With Telnet, a user can work from a PC as if it were a terminal attached to another machine by a hard-wired line.

V

Vintage
An internal code used to identify the release and/or version of a circuit pack.

Index

Numerics

116A isolating data interface, 2-19

A

activate/deactivate login, 3-19
Add Client
    fields and description, 5-29
    screen, 5-29
Add Client Link
    commands, 4-37, 6-28
    menu items, 4-36, 6-27
    screen, 4-36, 6-27
    security, 4-36, 6-27
Add Host, 4-22, 6-15
    commands, 4-22, 4-23, 5-16, 6-15, 6-16
    fields and description, 4-22, 5-15, 6-15
    screen, 4-22, 5-15, 6-15
Add Logins
    asai_adm, 4-13, 6-6
    commands, 4-13, 4-14, 5-7, 6-6, 6-7
    field name and description, 4-13, 6-6
    screen, 5-6
Add logins
    asai_adm, 5-6
Add Routes, 4-30, 6-23
    commands, 4-31, 5-24, 6-24
    fields and description, 5-23
    screen, 4-30, 5-23, 6-23
add station command, 3-5
add/delete login, 4-12, 5-4, 5-5, 6-5
administration
    add/delete login/password, 4-11, 6-4
    DLG and CV/LAN, 4-9
    DLG and CV/LAN login/password, 4-9
    DLG and CV/LAN maintenance, 4-10
    DLG and CV/LAN TCP/IP, 4-9
    DLG and CV/LAN usage commands, 4-10
    login/password, 4-11, 6-4
    Login/Password Administration commands, 5-5
    login/password commands, 4-12, 6-5
    login/password screen, 5-4
    switch, 3-3
    TCP/IP, 5-10
Administration/Port B, 2-22
alarms, hardware messages, 4-1
amphenol connector, 2-15, 2-18
Application Component, 4-65, 6-46
Application Components screen, 5-48
application installation command, F-4
Application Port Assignment
    menu items, 4-33
    screen, 4-33
ASAI
    Test screen, 5-50
    Trace screen, 5-51
Assign Port for Node ID signalXX
    fields and description, 5-30
    screen, 5-30
Assigning MAPD machine ID, 3-11
audit trail, 1-8

B

backup of removable medium, 3-20
before carrier arrangement worksheet, A-2
board interfaces and support, TN801, 1-3
boot completion check, H-3
bringing up the MAPD system, D-2

C

cables, B-2
call reference value, 3-6
capacity on MAPD system, 1-7
carrier functions, port slots, A-3
carrier, restrictions, 2-9
change circuit packs command, 3-4
Change Passwords
    commands, 5-9
    conventions, 4-15, 6-8
    field name and description, 4-16, 6-9
    fields and description, 5-8
    screen, 5-8
    steps, 4-16, 6-9
change passwords, 5-4
changing password, 4-14, 6-7
changing, password, 5-7
checking for successful boot, H-3
Client Access Log
    fields and descriptions, 5-41
    screen, 5-41
Clients for Node ID signalXX, 4-40
    fields and descriptions, 5-27
    screen, 5-27
Clients for Node ID signalXX, Add Client, 4-42
command
    add station, 3-5
    change circuit packs, 3-3
Command Log
    fields and description, 5-43
    screen, 5-43
commands, This Host, 5-12

connecting
a terminal via modems, 2-32
modem, B-4
system cables, 2-22
the maintenance modem, 2-35
connection state, TCP/IP, 4-73, 6-49
considerations
safety, 2-13
security, 1-8
conventions for screens, 4-1
craft login, 2-37
CRV length, 3-6
customer configuration, H-1
Customer Options Form, 3-1
CV/LAN
Administration screen, 4-38
application installation command, H-5
application with clients on networks, E-3
Assign Port for Node ID signalXX, 4-43
definition, 4-2
Message Collection Period, 4-80, 5-57
Message Collection Period fields and description, 5-57
Port Status/Control, 4-77
CV/LAN Administration
commands, 5-25
fields and description, 5-25
screen, 5-25
CV/LAN Port Status/Control
fields and description, 5-54
screen, 5-54
CV/LAN Utilities, 4-66
ASAI Test, 4-67, 5-50
ASAI Trace, 4-68, 5-51
commands, 4-66
ISDN Alarm, 4-70, 5-53
ISDN Trace, 4-69, 5-52
menu items, 4-66
menu items and description, 5-49
screen, 5-49
CVLAN Port Status/Control commands, 4-78

D

data terminal equipment, 2-25
Default Gateway
commands, 4-26, 5-20, 6-19
fields and description, 5-20
menu items, 4-27, 6-20
screen, 5-19
Default Gateway screen, 4-26, 6-19
default, terminal type, 4-2
definition
CV/LAN, 4-2
DLG, 4-2
DEFINITY ECS Port States, 4-78
Diagnostics, 4-61, 6-42
Hardware Alarms, 4-63, 5-46, 6-44
Hardware Status, 4-64, 5-47, 6-45
menu items and description, 5-44
Ping Host, 4-62, 5-45, 6-43
screen, 5-44
direct connection for terminal, 2-26, 2-30
DLG
application installation command, H-4, H-5
definition, 4-2
main menu screen, 4-8, 6-3
Message Collection Period, 4-75, 6-51
Port Status/Control, 4-10, 4-71, 6-47
Port Status/Control commands, 4-74, 6-50
Reset System, 4-52, 6-35
DLG Administration
commands, 4-35, 6-26
links, 4-34, 6-25
menu items, 4-35, 6-26
screen, 4-34, 6-25
security, 4-34, 6-25
DTE, see data terminal equipment, 2-25

E

evoking the screens, H-1
examples of system configuration, E-1
extension, switch, 3-5

F

Fax Modem for the Maintenance Port, B-4
field
CRV length, 3-6
extension, 3-5
MIM support, 3-6
port, 3-5
TEI, 3-5
type, 3-5
XID, 3-5
field names and descriptions, 4-8, 5-3, 6-3
fixed TEI field, 3-5
flash disk, PCMCIA, 2-38
function keys
for moving around the screen, 4-4
for moving around the system, 4-3

G

generic PC connection, 2-25
guidelines for using worksheets, A-1

H

hardware
alarms message, 4-1
test, 2-37
Hardware Alarms
fields and description, 5-46
screen, 5-46
Hardware Status
fields and description, 5-47
screen, 5-47
host name, 3-12

I

ID, MAPD machine, 3-11
IDE disk image, H-4
initial
switch administration, 3-3
installation
LAN System assembly, 2-14
steps, 2-15, 2-18
installing
116A isolating data interface, 2-19
a terminal through direct connection, 2-26, 2-30
a terminal via modems, 2-32, 2-33
new terminal, 2-28, 2-31
terminal, 2-25
instructions, MAPD assembly and client administration, E-3
interface
116A isolating data, 2-19
ISDN Alarm
fields and description, 5-53
screen, 5-53
ISDN Trace screen, 5-52
items, menu, 4-2

L

labels for MAPD, 2-38
LAN
System assembly installation, 2-14
LAN/Client connection test, 3-13
length of cables, B-2
limitations on capacity, 1-7
limits on MAPD system assemblies, A-1
list of screens, 5-1
list of screens (DLG and CVLAN), 4-5
list of screens (DLG), 4-7, 6-1
local administration port B, 2-22
Local Host Table, 4-20, 6-13
commands, 4-21, 6-14
fields and description, 4-20, 5-13, 6-13
screen, 4-20, 5-13, 6-13
login, 2-29, 2-31, 2-34, 2-37
activate/deactivate, 3-19
add, 4-13, 4-14, 5-6, 5-7, 6-6, 6-7
add/delete, 5-5
asai_adm, 5-6
change password, 5-5
prompt, 4-2
Login Attempt Log
fields and description, 5-40
screen, 5-40
Login/Password Administration
commands, 4-12, 6-5
fields and description, 4-11, 6-4
Login/Password administration screen, 5-4
logins, 5-9
add/delete, 5-4
loss, packet percent, 3-18

M

machine ID, MAPD, 3-11
Main Menu
DLG and CV/LAN fields, 4-9
DLG and CV/LAN screen, 4-9
DLG screen, 4-8, 6-3
main menu
(CV/LAN) screen, 5-3
Maintenance
(DLG and CV/LAN), 4-45
(DLG) screen, 4-44, 6-29
menu items and description, 5-31
screen, 5-31
maintenance modem connection, 2-35
Maintenance/Port A, 2-22
MAPD
board cable connectors, 2-22
external cable, 2-26
labels, 2-38
required switches, A-4
system administration, 1-7
system capacity, 1-7
system slots, 2-9
MAPD system
reboot, 3-12
menu
item, 4-20, 6-13
items, 4-2, 4-24, 6-17
Message Collection Period description, 4-75, 6-51
messages
hardware alarms, 4-1
MIM support, 3-6
modem connection, 2-33, B-2

modem option settings, B-4
modems and terminals, B-2
moving around the system
    function keys, 4-3, 4-4
    screens, 4-3
multiple secure LANs, E-3

N

name, host, 3-12
Network Routing Daemon
    field names and description, 5-18
    menu item, 4-25, 6-18
    screen, 4-25, 5-18, 6-18
    screen commands, 4-25, 6-18
Network Routing Information
    (Main Menu), 4-24, 6-17
    menu items and descriptions, 4-24, 5-17, 6-17
    screen, 4-24, 5-17, 6-17
Network Routing Table
    commands, 4-28, 6-21
    field names and description, 5-22
    menu items, 4-29, 6-22
    route administration, 5-21
    screen, 4-28, 5-21, 6-21
networking information, G-2
networking information for on-site technician, G-1
new IP address, 3-12
new terminal installation, 2-28, 2-31
null modem connection, 2-33, 2-36
null modem for DTE, 2-26

O

options
    modem settings, B-4
    terminal connections, B-2
    terminal settings, B-3
    terminals and modems, B-2
options form, customer, 3-1
ordering
    information, C-1

P

packet loss, percent, 3-18
packets out of sequence, 3-18
parameters, 1-6
password, 2-37, 4-2
    change, 5-4
    changing, 5-7
    changing conventions, 4-15, 6-8
    changing rules, 5-8
    changing screen, 4-15, 5-8, 6-8
    prompt, 4-2
    protection, 1-8
    setting, 5-9
password, changing, 5-5
PC memory test, F-2
PCMCIA disk, 2-38
PCMCIA Flash Disk, 2-19
Ping Host
    fields and description, 5-45
    screen, 5-45
ping the host test, 3-15
port
    Administration Assignment, commands, 4-33
    service states, 4-72, 6-48
Port Administration
    commands, 4-32
    menu items, 4-32
port slot assignment worksheet, A-2
port, LAN Gateway ports, 3-5
powering down the MAPD system assembly, F-1
precautions
    for installing the MAPD system assembly, 2-14
problems
    connectivity resolution, D-3
    login prompt, 2-29, 2-31
project manager worksheet, G-1
protecting the system, 1-8

R

range, temperature, 2-3
rebooting MAPD system, 3-12, H-2
remote maintenance port A, 2-22
Removable Media Operations, 4-47, 6-30
    menu items and description, 5-32
    screen, 5-32
Removable Media Operations commands, 4-48, 6-31
required information for networking, G-2
required tools for installation, 2-13
Reset System (DLG and CV/LAN), 4-53
restrictions, carrier and slot, 2-9
results of pinging the host, 3-15
root password, F-4, H-4
RS-232C connectors, 2-26
rules for safety, 2-13

S

safety considerations, 2-13
sample CV/LAN configuration, E-2
SanDisk, 2-19
saving customer configuration, H-1
screen
  Add Client, 5-29
  Add Client Link, 4-36, 6-27
  Add Host, 4-22, 5-15, 6-15
  Add Logins, 4-13, 5-6, 6-6
  Add Routes, 4-30, 5-23, 6-23
  Application Component, 4-65, 6-46
  Application Components, 5-48
  Application Port Assignment, 4-33
  ASAI
    Trace, 5-51
  ASAI Test, 5-50
  Assign Port for Node ID signalXX, 5-30
  Change Password, 4-15, 6-8
  Change Passwords
    commands, 5-8
  Client Access Log, 4-58, 5-41, 6-39
  Clients for Node ID signalXX, 4-40, 5-27
  Clients for Node ID signalXX, Add Client, 4-42
  Command Log, 5-43
  Command Logs, 4-60, 6-41
  CV/LAN Administration, 4-38, 5-25
  CV/LAN Assign Port for Node ID signalXX, 4-43
  CV/LAN Message Collection Period, 4-80
  CV/LAN Port Status/Control, 4-77, 5-54
  CV/LAN Utilities, 4-66, 4-67, 5-49
  CV/LAN Utilities, ASAI Trace, 4-68
  CV/LAN Utilities, ISDN Alarm, 4-70
  CV/LAN Utilities, ISDN Trace, 4-69
  Default Gateway, 4-26, 5-19, 6-19
  Diagnostics, 4-61, 5-44, 6-42
  Diagnostics Hardware Status, 4-64, 6-45
  Diagnostics, Hardware Alarms, 4-63, 6-44
  Diagnostics, Ping Host, 4-62, 6-43
  DLG Administration, 4-34, 6-25
  DLG and CV/LAN (Main Menu), 4-9
  DLG Main Menu, 4-8, 6-3
  DLG Message Collection Period, 4-75, 6-51
  DLG Port Status/Control, 4-71, 6-47
  Hardware Alarms, 5-46
  Hardware Status, 5-47
  ISDN Alarm, 5-53
  ISDN Trace, 5-52
  Local Host Table, 4-20, 5-13, 6-13
  Login Attempt Log, 4-57, 5-40, 6-38
  Login/Password Administration, 4-11, 5-4, 6-4
  main menu (CV/LAN), 5-3
  Maintenance, 5-31
  Maintenance (DLG and CV/LAN), 4-45
  Maintenance (DLG), 4-44, 6-29
screen, (continued)
  Message Collection Period (CV/LAN), 5-57
  Network Routing Daemon, 4-25, 5-18, 6-18
  Network Routing Information, 4-24, 5-17, 6-17
  Network Routing Table, 4-28, 5-21, 6-21
  Ping Host, 5-45
  Port Administration, 4-32
  Removable Media Operations, 4-47, 5-32, 6-30
  Reset System (DLG and CV/LAN), 4-53
  Reset System (DLG), 4-52, 6-35
  Security Logs, 4-56, 5-39, 6-37
  Set System Time and Date, 4-49, 5-33, 6-32
  System Logs, 5-38
  System Reset Log, 4-59, 5-42, 6-40
  TCP/IP Administration, 4-17, 6-10
  This Host, 4-18, 5-11, 6-11
screens, 5-1
  conventions, 4-1
  function keys, 4-1
  list (DLG and CVLAN), 4-5
  list (DLG), 4-7, 6-1
  moving around the system, 4-3
secure LAN with defaults, E-2
security considerations, 1-8
Security Logs, 4-56, 6-37
  Client Access Log, 4-58, 6-39
  Command Logs, 4-60, 6-41
  Login Attempt Log, 4-57, 6-38
  menu items and description, 5-39
  screen, 5-39
  System Reset Log, 4-59, 6-40
service states for port states, 4-72, 6-48
services login, H-1
Set System Time and Date
  commands, 4-50, 6-33
  fields and description, 5-33
  screen, 4-49, 5-33, 6-32
  standard time zones for different countries, 4-50, 6-33
setting
  a Generic Modem for Local Console Port, B-5
  password, 2-37
  US Robotics faxmodem, B-4
setting new IP address, 3-12
settings
  modem option, B-4
  terminal option, B-3
slot
  connections, 2-9
slot and carrier restrictions, 2-9
slot locations for the MAPD system assembly, A-4
slots
  MAPD System, 2-9
solving connection problems, D-3
solving terminal connection problems, D-2
standard modem, B-2
state
  AINIT, 2-29, 2-31
  ASAI, 2-29, 2-31

steps
for installing new terminal, 2-28, 2-31
for terminal connection via modem, 2-32, 2-33
installation, 2-15, 2-18
system backup, 3-20
subnet mask, 3-12
switch
administration, 3-3
extension, 3-5
switches, for MAPD usage, A-4
system
backup, 3-20
configuration, 1-7
configuration examples, E-1
reboot, F-4
upgrade, 1-8
System Logs
fields and description, 5-38
screen, 5-38
System Logs screen, 4-55, 6-36
System Reset Log
fields and description, 5-42
screen, 5-42
System slots
MAPD, 2-9

T

TCP/IP
Administration, 4-17, 6-10
administration, 5-10
connection state, 4-73, 6-49
domain name servers, 5-10
exit, 5-10
host, 5-10
local host table, 5-10
network routing information, 5-10
TCP/IP Administration screen, 5-10
technical support center
for connection problems, D-1
for problem solution, D-1
for system upgrade, 1-8
technician, on-site information, G-1
temperature range, 2-3
temporary installation, 2-25
terminal
connection options, B-2
installation, 2-25
option settings, B-3
terminal type, 4-2
default, 2-37, 4-2
terminals and modems, B-2
test, ping the host, 3-15
testing hardware, 2-37
testing LAN/Client connectivity, 3-13
This Host
commands, 4-18, 5-12, 6-11
fields and description, 4-18, 5-11, 6-11
menu items, 4-18, 6-11
screen, 4-18, 5-11, 6-11
throughput capacity, 1-7
TN801 board support and interfaces, 1-3
toll fraud, 1-8
tools for installation, 2-13
type, ASAI, 3-5

U

UNIX kernel rebuild for CV/LAN, F-5
upgrading the MAPD system with new software, H-1
upgrading the system, 1-8
US Robotics faxmodem, B-4
using function keys, 4-3

W

worksheets
A-1, port slot assignments before carrier arrangement, A-2
A-2, port assignments, carrier rearrangement, A-3
A-3, port slot locations for MAPD system assembly, A-4
project manager, G-1
usage guidelines, A-1

X

XID field, 3-5