Lucent Technologies
Bell Labs Innovations

Call Accounting Systems

Cost Allocator Version 2
Administration, Operation, and Maintenance

555-006-506
Issue 1
October 1992

Contents

About This Document 1

- Purpose 1
- Intended Audience 1
- How This Document is Organized 1
- Conventions Used in this Document 3
- Trademarks and Service Marks Used in this Document 3
- Related Resources 4
- How to Make Comments About This Document 5

1 Basics of Call Accounting 1-1

- Why Call Accounting 1-2
- Outside Your Business 1-2
  - The National Network 1-2
  - The International Network 1-3
  - Telephone Companies and Equal Access 1-3
  - Trunks and Services 1-4
- Inside Your Business 1-5
  - Call Detail Recording 1-5
  - Answer Supervision 1-6
- When the Inside and Outside Meet 1-6

2 System Overview 2-1

- Network Design 2-2
- CA V2 Basic Package Features 2-4
- CA V2 Software Options 2-6
- System Operations 2-6
- Hardware Components 2-8
- Switch Interface 2-10
- Connectivity 2-12
- System Capacities 2-13

3 Call Rating Overview 3-1

- Basic Rating 3-2
- Carrier Information 3-3
- Telephone System Configuration 3-3
- Call Types 3-5
- Dialed Digit Processing 3-6
- Taxes and Adjustments 3-8
- Rating Sample Call Records 3-10

4 User Interface 4-1

- Logging In 4-2
- Using the Menu System 4-3
- Using the Data Entry Screens 4-4
- Using Keyboard and Database Commands 4-6
- Using the On-Line Help Feature 4-8
- Changing Menu Color Settings 4-9
- Logging Off 4-10

5 Setup Procedures 5-1

- Installation Review 5-2
- Setting Up CA V2 System Parameters 5-3
  - Entering Printer Information 5-3
  - Entering Device Information 5-4
  - Entering Alarm Information 5-5
  - Entering the User-Defined Reporting Period 5-6
  - Entering Call-Record Information 5-7
- Setting Up Site Parameters 5-8
  - Installing a Site 5-8
  - Entering Site Information 5-10
  - Entering the Telephone System Configuration 5-11
  - Entering the Dialed Digit Processing Table 5-13
  - Entering Call-Collection Information 5-14
  - Entering Call Type Adjustments 5-16
- Creating the Organization Tables 5-17
  - Entering the Organization Level Headings 5-17
  - Entering the Cost Center Table 5-19
  - Entering the Owners Table 5-20
  - Entering the Account Code Table 5-22
  - Entering the Authorization Code Table 5-23
- Entering Security Levels 5-24
- Final Preparations 5-25
  - Deleting All Call Records 5-25
  - Backing Up the System 5-26
  - Starting Call Costing 5-27
  - Starting Call Collection 5-27

6 Reporting Procedures 6-1

- General Information About Standard CA V2 Reports 6-2
- Defining and Generating a Selection Report 6-6
- Defining and Generating an Organization Detail Report 6-10
- Defining and Generating Allocation Reports 6-12
  - Allocation Detail Report 6-13
  - Allocation Summary Report 6-16
- Defining and Generating Account Code Reports 6-17
  - Account Code Detail Report 6-17
  - Account Code Summary Report 6-18

- Defining and Generating a Call Type Report 6-18
- Defining and Generating a Facilities Group Report 6-19
- Defining and Generating a Frequently Called Numbers Report 6-19
- Generating Tables 6-20
- Scheduling Reports 6-21
- Viewing and Printing Reports on File 6-24
- Applications Tips 6-25

Spot Telephone Abuse 6-25
Allocate Costs 6-25
Generate Revenue 6-26
Bill Back Clients 6-26
Measure Productivity 6-26
Stop Facilities Misuse 6-26
Optimize Network 6-27
Analyze Your Telephone Bill 6-27

7 **Database Management Procedures** 7-1

- Managing the Call Record Database 7-2

Editing Call-Record Collection Parameters 7-2
Editing Call-Collection Configuration 7-3
Editing Stored Call Records 7-7
Scheduling Call-Record Deletion 7-8

- Managing the Call-Rating Database 7-9

Editing Site Information 7-9
Editing the Telephone System Configuration 7-10
Editing the Dialed Digit-Processing Table 7-14
Editing Call Type Adjustments 7-16
Editing Carrier Information 7-18
Editing the Holiday Table 7-21
Editing the Rate Tables 7-21

- Managing the Organization Database 7-24

Editing the Organization Hierarchy Levels 7-24
Editing Cost Center Information 7-25
Making Global Cost Center Updates 7-27
Editing Owner Information 7-28
Making Global Owner Updates 7-30
Editing Account Code Information 7-31
Editing Authorization Code Information 7-33

- Managing the System Database 7-34

Editing the Printers Configuration 7-35
Editing the Devices Configuration 7-36
Editing Call-Collection Port Information 7-36
Editing the Alarm Parameters 7-38
Setting Up Multi-Site Summary Reports 7-39
Scheduling Multi-Site Polling 7-40
Editing Multi-Site Polling Information 7-41
Editing the User Defined Reporting Period 7-42
Editing the Security Levels 7-43

8 Standard Operating Procedures 8-1
- Using the System Status Menu 8-2
- Stopping and Starting Call Rating 8-3
- Backing-Up CA V2 8-3
- Performing Other Standard Operations 8-4
  - Adding Sites 8-4
  - Removing Sites 8-5
  - Installing PBX Interfaces 8-6
  - Installing Software Updates and Modules 8-6
  - Loading Bulk Data Files 8-7

9 Maintenance and Troubleshooting Procedures 9-1
- Invoking the UNIX Shell 9-2
- Restarting Application Processes 9-2
- Viewing and Interpreting Log Files 9-2
- Acknowledging Alarms 9-4
- Reporting Trouble 9-5
- Basic Troubleshooting 9-6

A Menu System A-1

B Menu Accessibility by Security Level B-1

C Report and Table Samples C-1

D UNIX File Tree D-1

Glossary GL-1

Index IN-1

About This Document

Purpose

This document is intended to guide those who want to understand the Cost Allocator Version 2 (CA V2) system, how it operates, and how it fits into a telecommunications network. It provides detailed instructions for managing the system and for generating reports.

Intended Audience

This document is written for the following audiences:

- Telecommunications managers who wish to use the information in CA V2 reports
- System managers responsible for maintaining CA V2
- Technical marketing consultants and support specialists, including those who install CA V2

How This Document Is Organized

This document describes every CA V2 function, with similar activities or functions grouped together in chapters. Introductory chapters precede the body of the CA V2 function descriptions; appendixes provide additional reference material.

First-time users should read the following material:

- Chapter 1, *Basics of Call Accounting,* introducing the basic telephone industry and call-accounting concepts.
- Chapter 2, *System Overview,* describing the design and flow of a CA V2 system. System feature highlights are discussed, as well as the CA V2 software options.
- Chapter 4, *User Interface,* providing detailed instructions to acquaint the user with the operation of CA V2's menu and screen systems.

Users who wish to run reports should read the following material:

- Chapter 6, *Reporting Procedures,* describing all call-accounting reports and how to generate them.
- Appendix C, *Sample Reports and Tables,* showing sample printouts of call-accounting reports.

Users with the task of entering setup information from the planning forms should read the following material:

- Chapter 5, *Setup Procedures,* describing the tasks to customize your system after receiving it from the installer, and prior to starting operations. A flow chart showing the order of setup tasks is also included.

System administrators should read the following material:

- Chapter 3, *Call Rating Overview,* describing the process of costing a raw call record and the functions it involves.
- Chapter 7, *Database Management Procedures,* describing standard tasks used to maintain and or update CA V2's databases.
- Chapter 8, *Standard Operating Procedures,* describing those system functions used during normal operation of CA V2.
- Chapter 9, *Maintenance and Troubleshooting Procedures,* describing the procedures to perform nonstandard operations or operations under error conditions and how to report a problem that cannot be resolved.
- Appendix B, *CA V2 Utilities,* describing additional tools for system management.

Appendix A contains a menu tree showing the menu placement of every CA V2 function. A list of abbreviations, a glossary, and an index appear at the end of the document.

Conventions Used in this Document

The following typographic conventions are used in this document:

- Keys that you press are shown in brackets — for example:

  Press <ESC>.

- Two or more keys that you press simultaneously are shown together in brackets — for example:

  Press <Ctrl-c>.

- Some commands in a data-entry screen are executed by typing the first letter of the command name (shown in brackets) in upper or lower case — for example:

  Press <U>pdate.

- The word “enter” in a procedure means to type a value and press <↵> (the carriage return in your keyboard) — for example:

  Enter **y** to continue.

- Information displayed on the screen is shown in `constant-width` type — for example:

  The message `Rating Running.` appears.

- User entries are shown in **`constant-width bold`** type if they must be typed exactly as shown, or in *italic* type if they are variables — for example:

  At the `login:` prompt, enter **`v2`**

- Variables supplied by you or the system are shown in *italic* type — for example:

  `User` *login_name* `has been entered.`

Trademarks and Service Marks Used in This Document

The following trademarks and service marks are used in this document:

- DEFINITY, DIMENSION PBX, MERLIN, and SPIRIT are registered trademarks and service marks of AT&T.

- UNIX is a trademark of UNIX System Laboratories, Inc.

- MCI and PRISM are registered service marks of MCI Communications Corporation.
- MITEL SX is a trademark of MITEL Corporation.
- NEC is a trademark of NEC TELEPHONES, INC.
- ROLM is a trademark of ROLM Corporation.
- SL1 is a trademark of NORTHERN Telecom Limited.

Related Resources

The following documents may provide you with additional information:

- *Cost Allocator Version 2 Installation* (555-006-111) — manual directed at AT&T technicians and/or others interested in understanding or performing an installation.
- CA V2 optional module documentation — user manuals that describe the installation and operation of the software options, including the following:

  Cost Allocator Version 2 Enhanced Reporting Module (555-006-508)

  Cost Allocator Version 2 Integrated Poller Module (555-006-509)

  Cost Allocator Version 2 Enhanced Rating I Module (555-006-510)

  Cost Allocator Version 2 Enhanced Rating II Module (555-006-511)

  Cost Allocator Version 2 Enhanced Chargeback Module (555-006-512)
- *Call Detail Recording Unit/SE* (555-006-215) — installation and administration manual for the CDRU/SE.
- *Call Detail Recording Unit/Small* (555-006-212) — installation and administration manual for the CDRU/S.
- *UNIX System V/386 Release 3.2.3 Operations/System Administration* — administration manual for the UNIX operating system, running on a 6386 WGS processor.
- *UNIX System V/386 Release 3.2.3 FACE User's Administrator's Guide* — administration manual for the 6386 WGS under UNIX System V, using the FACE menu system.

How to Make Comments about This Document

Reader comment cards are included at the beginning of this document. We are interested in your suggestions for improving this document and urge you to fill out a card and send it in. If the reader comment cards have been removed from this document, please send your comments to:

AT&T Technical Publications Department
Room 22-2c11
11900 North Pecos Street
Denver, Colorado 80234

Basics of Call Accounting

1

The AT&T Cost Allocator Version 2 (CA V2) system is a new tool designed specifically to help you control and administer telecommunications costs in your business. Before describing it in detail, this chapter provides some basic background on call accounting in general.

This chapter is organized into the following sections:

- *Why Call Accounting* — touches on the need for cost reduction and resource management.
- *Outside Your Business* — is an introduction to such telephony concepts as the public switched network, long distance carriers, trunks, and private networks.
- *Inside Your Business* — continues with basic concepts regarding telephone traffic routing at your premises.
- *When the Inside and Outside Meet* — discusses the options in meeting required services that are cost-effective and how the AT&T CA V2 system can provide the information to help you to make informed decisions.

Why Call Accounting?

Using telephones costs money. In small as well as large companies, telephone expense is a major budgetary item, and rising costs are a concern to every manager.

- Reducing costs and optimizing resources go hand in hand. ("Am I using my telephone services to the fullest?" "Do I have a problem with unauthorized use of services?" "What kind of facilities will serve me best?")
- Then, there is the problem of allocating expenses. ("Who gets charged for these calls?" "How do I bill back clients? …company departments? …divisions?")
- The total picture is not always clear. ("Can our calling patterns be handled better with special services? …is the expense justified?" "Is there a trend in long distance calling? …is it company-wide? …what are our offices in the south doing?")

The AT&T CA V2 system can help you answer these and similar questions.

Doing so is not difficult; however, there are some concepts concerning telecommunications management — the national telephone network, your own telephone system, and basic call accounting — that should be familiar before you use the AT&T CA V2.

Outside Your Business

Let's begin by looking at how the public switched network functions in this country and abroad.

The National Network

The structure of the national public telephone network has changed rapidly in recent years due to the breakup of the Bell System and advances in telecommunications technology. Today's national network grew from, and retains many characteristics of, the traditional telephone network briefly described below.

The traditional national public telephone network is built on the central office (CO) system. COs are switching offices that provide the equipment to route and connect calls originating from any point. Calls are directed from the caller into the CO and out to the number called. When you dial a local call, the first three digits identify the CO, or *exchange,* serving the calling line; the last four digits identify the called line, or *station.*

Each user is connected to a local CO. The local COs are connected to each other with intermediate COs, which provide the link to larger COs in a hierarchy of increasingly larger groups up to a regional CO. In a long-distance call, a 3-digit area code identifies the regional link to a group of local COs.

Depending on the call destination, several COs may be used to reach the called party — across the street or across the nation. The hierarchy of COs forms the national telephone network, as suggested in Figure 1-2.

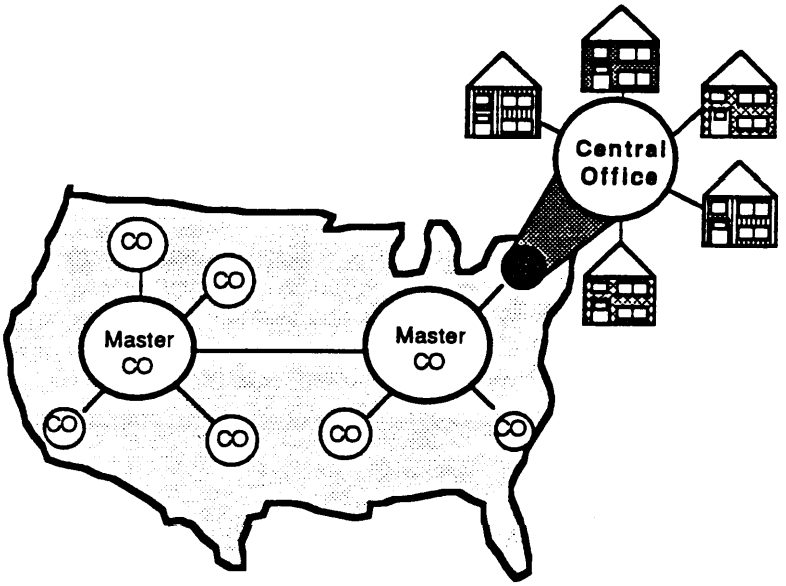

Figure 1-2. Hierarchy of Central Switching Offices in the National Network

The International Network

The international network follows a similar system of local central switching offices, connected to a hierarchy of larger groups. This network also has a numbering plan to connect callers from different parts of the world. The calling pattern is a 1- to 3-digit *country code,* followed by the specific national network calling pattern (area or city code, local exchange, and user line number).

Telephone Companies and Equal Access

Local telephone companies offer a variety of services in local and long distance voice and data communications. These companies, such as AT&T Consumer Communications Services and AT&T Business Communications Services, are called *carriers.*

Local telephone companies operate the COs that carry and switch calls via a local exchange. They lease the *lines* that connect a customer's premises to a CO and provide access to long-distance and international services offered by other carriers for calls outside their local access transport area (LATA). (A LATA covers many COs.)

Long-distance carriers — also called interexchange carriers — provide telephone service between LATAs. The AT&T Communications Services companies provide direct distance dial (DDD), international direct distance dial (IDDD), and operator assistance through CO lines. These companies also provide custom long-distance services such as toll-free numbers, wide area telecommunications service (PROWATS), foreign exchange (FX), tie, private lines, and ISDN services.

According to the agreement established with the breakup of the Bell System, local telephone companies are reprogramming their larger electronic COs so that their customers can have the same type of connection — that is “equal access” — to any long-distance carrier’s network. In areas where equal access has been implemented, subscribers can dial 1 plus the area code and local number to place a call and have it served by their selected primary carrier. To access another carrier’s services, subscribers can dial a carrier’s assigned 10-xxx or 950-xxxx code, then the area code and local number. This code is called the interexchange carrier code (IXC).

Trunks and Services

The term *trunk* designates telephone cabling that connects the private switch (PBX) to a CO or outside switch. The term *tie line* usually designates telephone cabling that connects one private switch to another. Tie lines are also called *intermachine trunks.* The following are commonly used types of telephone trunks and tie lines.

- A CO trunk is a point-to-point line between the local CO and, for example, your PBX.
- An FX trunk connects a PBX system to a remotely located CO. This allows you to place “outside” calls through the remote exchange. FX services are charged at a flat monthly fee for the leased line and not per call (per-call toll charges are billed separately). This type of trunk is commonly used by businesses that place frequent calls to a specific remote location.
- A tie line *ties* together two private switches. Users at either end can dial extensions as if they were on premises and can also make *local* calls through the remote exchange. Because this service is also charged at a flat monthly fee, intra-company call costs can be dramatically reduced.
- WATS trunk provides in-bound or out-bound access to wider areas than a single point tie or FX trunk. Each WATS trunk (incoming or outgoing) can access one of the service areas defined for a location. Interstate service areas are arranged in concentric bands starting outside the subscriber's home state; in-state WATS service covers only the subscriber's state.
- *Out-WATS* service is used to place calls by the subscriber; *in-WATS* is used to receive calls — toll-free for the caller, paid by the subscriber. Although distance establishes the base rate for WATS, total charges are based on bulk usage of a particular line (or group of lines). The greater the usage, the lower the rates.

Inside Your Business

As in the telephone network, businesses large and small face similar traffic problems — how to route and connect telephones in the most efficient and cost-effective manner.

To organize this traffic, businesses install private telephone switching systems, using a KTS (key telephone system) or a PBX (private branch exchange) — or they subscribe to a Centrex service. The system selected depends upon telephone usage and features needed.

- KTSs are relatively small switches — typically, for less than 30 telephone lines — that use programmable "keys" for choosing the specific lines to place an outside call. KTSs may also offer hold, transfer, and other call-management features.

- PBXs are large-equipment systems that coordinate the use of all trunks. PBX features may include sophisticated in-house services like call forwarding, automatic call backs, and programmable route selection for placing outside calls.

- Centrex services are provided by some telcos, whereby subscribers share CO facilities, and thus acquire PBX-like capabilities.

Among the features of private telephone switches, the most important to call accounting is Call Detail Recording (CDR). Answer Supervision, another feature important to call accounting, is not as commonly found on switches as CDR.

Call Detail Recording

CDR-capable systems can output an electronic record of every call routed through the system. This record “details” call-management information, including the following:

- Time and date of call
- Call duration
- Call origin (extension or incoming trunk)
- Call destination (extension or outgoing trunk)
- Trunk or carrier service used
- Authorization code (if used)
- Account code (if used)
- Number dialed

Such records are used by CA V2 to allocate call costs and produce all the management reports.

Answer Supervision

Answer Supervision is a switch capability that detects when a call is answered. Telephone charges start when the telephone company billing equipment detects that the called party has answered the telephone. Some private switches, however, cannot tell when a call has completed its connection. To compensate, these switches reduce the “duration” reported in the call record by a fixed (or adjustable) amount.

The AT&T CA V2 can set up additional corrections to the duration reported by the switch, if required. This flexibility allows the system to closely match a call’s actual duration (and the charge computed by the telephone company) if answer supervision is not available.

When the Inside and Outside Meet

Controlling telecommunication costs starts by finding a balance between services needed by a business, carrier services available, and, of course, whether the service costs are justifiable.

In order to make informed decisions, telecommunications managers now follow one of two approaches — a local or central approach — for aquiring and processing call-record data. A local approach involves special-purpose computer systems that process data received directly from the switch on premises. A central approach involves multiple locations that transfer call-record data to a common location. This approach requires a local call collector system, a poller system to retrieve data from remote sites, and a processor system to organize the polled data into meaningful reports.

CA V2 is a central processing system with an optional poller function that can report total calling traffic from a business complex of up to 255 widely dispersed sites. The advantages of such a system include the following:

- Complete coverage that results in improving overall network performance and a wealth of information to reduce costs and assess current needs.
- Organization reports that allow flexible cost allocation consistent with your company’s corporate structure and billing practices.
- Online access and ad hoc reports that provide managers with current and historical data, either as summaries of trends and traffic patterns or as details to pinpoint problem areas.
- Latest call pricing — optionally available as periodic rate updates — that results in accurate costing of calls without requiring the user to update a complex database of telephone tariffs.
- Supports ISDN technology that allows subscribers of services like Megacom 800 to pinpoint distribution of incoming calls to a call center.

System Overview

2

AT&T Cost Allocator Version 2 (CA V2) is a full-featured call accounting system that provides call-record collection, rating, and reporting. This chapter describes the basic system components, operation, and configuration, as well as the options that can be separately purchased. The chapter is divided into the following sections:

- *Network Design* — describes the overall architecture of a telecommunications network and CA V2's position in this design.
- *Basic System Features* —describes some of the standard features of CA V2.
- *Software Options* — introduces the add-on modules that allow CA V2 further customization, such as volume discounting or allocation of services and equipment charges.
- *System Operations* — describes the flow of call-record information in a working system.
- *Hardware Components* — describes the hardware required by the CA V2 system. It includes a configuration diagram for all standard and optional devices.
- *Switch Interface* — describes the boards, cables and connectors required to provide a wall field or junction point accessible to a CA V2 installer.
- *Connectivity* — describes the cabling configuration to connect all standard and optional devices.
- *System Capacities* — presents the maximum capacities of the CA V2 databases.

Network Design

The AT&T CA V2 system is a comprehensive telecommunication management package for a business, university, or government installation ranging in size from a single facility to a multisite business complex. CA V2 performs the processing of call records in a call detail acquisition and processing (CDAP) network that includes call-record collector systems at remote sites and an poller system that regulates the transfer of data to the central processor.

The CDAP network design includes the following components:

- CA V2 *software* is available in two base models to accommodate systems with 500 or 20,000 telephone extensions. The 5 software options available are described later in this chapter.

- CA V2 resides on an AT&T 6386/25, 6386E/33 WGS, or 6386E/33 WGS Model S *processor* running under UNIX System V/386 Release 3.2.3, with the hardware configuration described later in this chapter.

- *Switches* that CA V2 supports include AT&T and non-AT&T models. CA V2 accepts 15-, 18-, and 24-word formatted and unformatted ASCII standard or Integrated Services Digital Network (ISDN) records from the following AT&T switches:

  - AT&T System 75 (R1V1, R1V2, R1V3, XEV2, and XEV3)
  - System 85 (R2V4)
  - DEFINITY Generic 1, Generic 2, and Generic 3
  - DIMENSION PBXs (FP 8, 11, and 12)
  - DIMENSION Prelude

  CA V2 can also accept standard ASCII records from the following AT&T and non-AT&T switches:

  - System 25 (R2V1)
  - AT&T SPIRIT 2448, MERLIN, and MERLIN II (FM 2, 4) key systems
  - ROLM 9751
  - Northern Telecom SL1-X11
  - NEC 2400
  - MITEL SX 100/200/2000

- *Call Collectors* are required in remote sites to store call records from the switch until they can be safely transmitted to the processing center via scheduled polls. CA V2 can accept the polled record of any of the above switches from the following AT&T systems:

  - 94A Local Storage Units (94A LSU)
  - Call Detail Recording Utility (CDRU) residing on a 3B2 or a 6386 processor
  - Call Detail Recording Unit/Small (CDRU/S) and Call Detail Recording Unit/SE (CDRU/SE)

In some cases central-site switches use a directly connected CDRU to act as a buffer for call-record storage.

- The CA V2 *Integrated Poller* option polls call-record collectors at remote sites.

A CA V2 site — typically, a building serviced by a single telephone switch — is the organizational entity that is the source of call records. CA V2 can accommodate up to 255 sites at widely dispersed locations. Telephone activity is gathered from the switch onsite and passed to CA V2 via one of several methods: a direct connection to CA V2, or if the Integrated Poller option is installed, via a modem linked to a collecting device. CA V2 processes and stores the costed records in central data files, where they become available for reports. The figure below displays a typical multisite configuration of an integrated CDAP network. It includes the connection to an AT&T facility used for customer support via remote access.

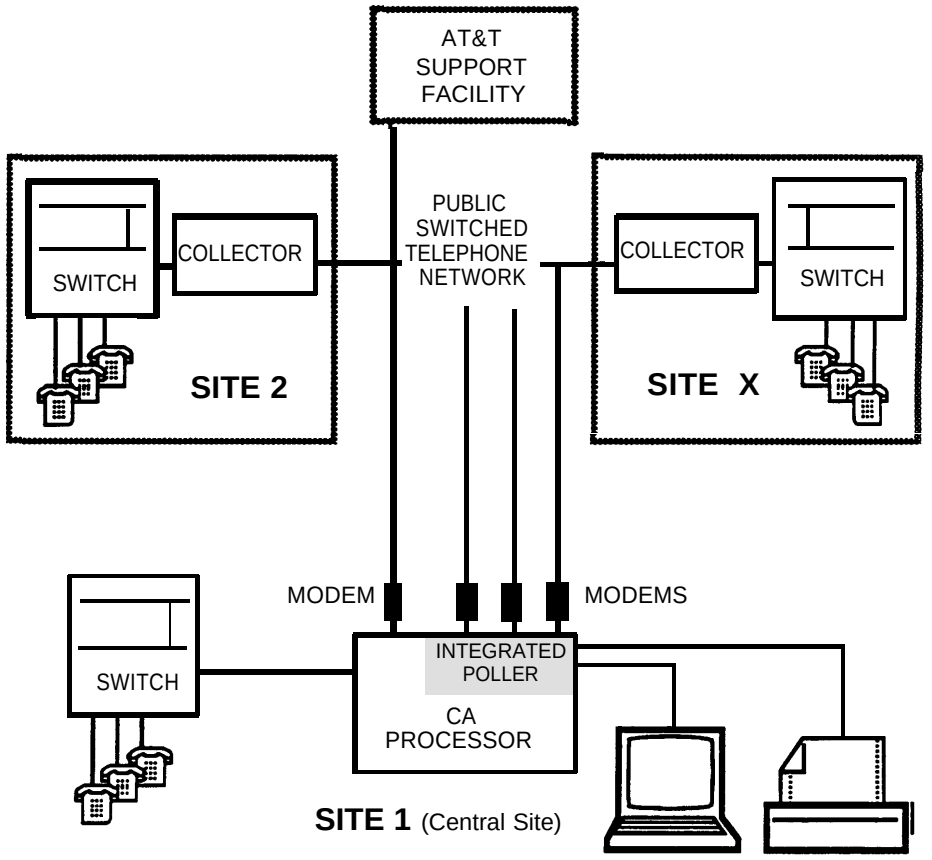

Figure 2-1. An Integrated System Architecture

CA V2 Basic Package Features

The basic CA V2 package is designed to offer a complete stand-alone call accounting system, with maximum flexibility to meet the needs of a variety of today's business environments. The following list describes some of the features.

- Multiuser Application Environment — CA V2 can be accessed by up to four concurrent users. This allows a variety of activities, such as database administration or report generation, to be accomplished at the same time.

- User Security Levels — To protect the system and its contents from unauthorized use while allowing full access to the system administrator, CA V2 has 4 user security levels. The system administrator defines a security level, Iogin ID and password for all system users. Upon login, each user's menu accessibility is limited according to their security level. Security levels are defined in the following paragraphs. A complete procedure for entering user security levels is found in chapter 7, *Editing Security Levels.* Appendix B contains a complete list of the functions accessible to each security level.

  Level 1 Security — Allows the user to manually invoke standard reports at the specified site and/or organization level.

  Level 2 Security — Allows the user all level 1 functionality plus some database maintenance at the specified sites and/or organization levels. The maintenance is limited to establishing or modifying the owner, cost center, account code and authorization code databases.

  Level 3 Security — Allows the user all level 2 functionality plus maintenance of most call rating and system level databases and report scheduling.

  Level 4 Security — Allows the user access to all functions and generally is defined for access to all sites and organization levels. This level is typically reserved for the system administrator (the system allows only one level 4 user at a time) and includes responsibility for defining and updating other users' security levels. Access to the UNIX shell is also available.

- Flexible Organization Hierarchy — CA V2 uses a flexible organization heirarchy scheme that allows the user to define the number and name of their company's organizational levels. In this way reporting criteria can be narrowly focused to allow highly detailed or specific reports. Other functions that utilize the organization table, such as security levels, are similarly affected.

The figure below shows a sample organization structure with seven levels. The first and highest level is always company. The last two levels are also fixed as cost center and owner, respectively. Between company and cost center, the user can define any number of levels, limited only by a 78-character maximum. If some parts of a company's structure do not include all the defined levels, they can be left blank. The flexible hierarchy eliminates extra default levels and allows asymmetrical structures to be accurately portrayed. A complete procedure for creating the organization hierarchy is found in chapter 7, *Managing the Organization Database.*

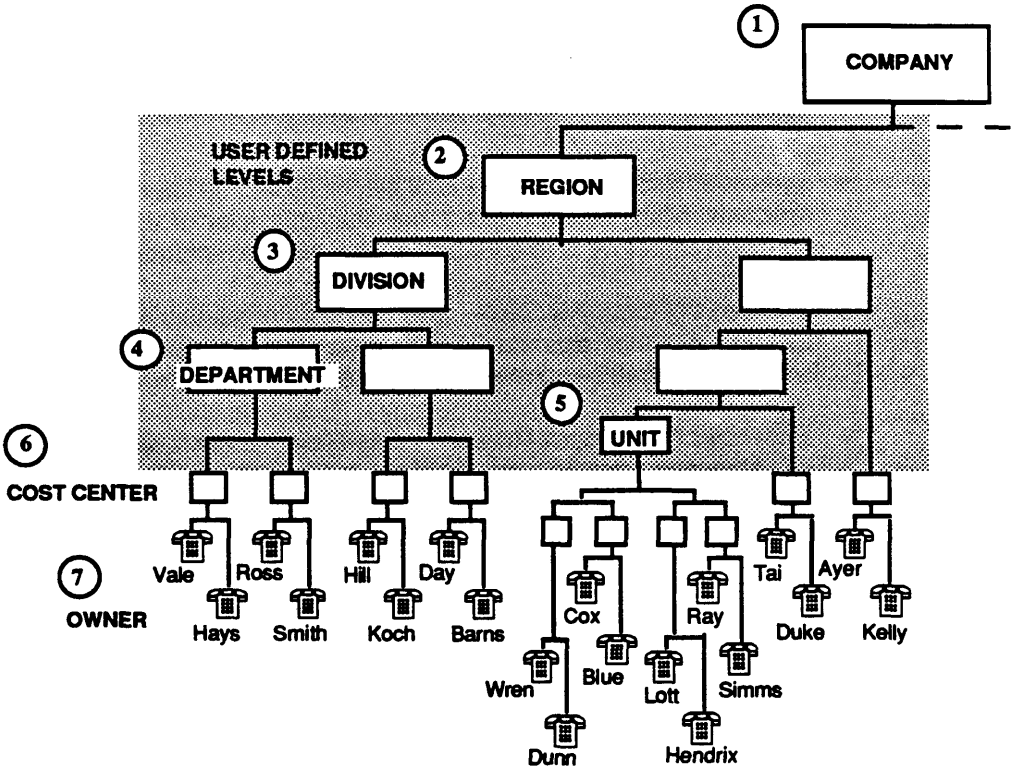

Figure 2-2. Flexible Organization Hierarchy

- Full Reporting Capabilities — The strength of a call-accounting system is its ability to create reports. CA V2 offers a comprehensive range of reports, as well as the means to select criteria within very limited or very broad parameters. Chapter 6, *Reporting Procedures,* gives a detailed description of each report and tips on analyzing and applying the information they contain.

- Online Help — This feature allows users to access a help window display, called a "topic," that contains reference material for each CA V2 function. Positioning the cursor on a menu item and pressing <F1> displays that topic's information. Help can also be accessed from within function screens by using the <F1> key. Once the topic is displayed, highlighted cross-references allow access to other related topics.

CA V2 Software Options

The options listed below are available to complement the standard CA V2 package. Documentation detailing each module's installation and operation is contained in separate documents that are provided with the option.

- Enhanced Reporting Module — offers two additional reports — the Facilities Used Report and the Call Distribution Report. In addition, it contains the Custom Report Module, used to create reports in user-defined formats based on CA V2's call accounting database.
- Integrated Poller Module — adds the capacity to poll and administer a site's CDRU.
- Enhanced Rating I Module — enables the system to identify and utilize data derived from billing tapes. It also allows the application of volume discounts to specified carrier rates and the scheduling of automatic call recosting.
- Enhanced Rating II Module — available to purchasers of the Enhanced Rating I Module. It further expands CA V2's customized rating ability to include ISDN costing and enables up to eight carrier services, per site, to be loaded.
- Enhanced Chargeback Module — provides a means to identify services and equipment charges as a portion of the overall cost of a telephone system, allocates these charges within the organization structure, and upgrade functionality for generating reports containing this information.

System Operations

The flow of call-record information in a working system is illustrated in Figure 2-3. The steps below reference the diagram.

1. When a phone call is placed at a CA V2 site, it is routed to the local CO and then to its final destination. Incoming calls are routed to the switchboard and/or station (extension).
2. The telephone switch on premises prepares an electronic record of the transaction.
3. The local telco billing equipment records the transaction for monthly billing.

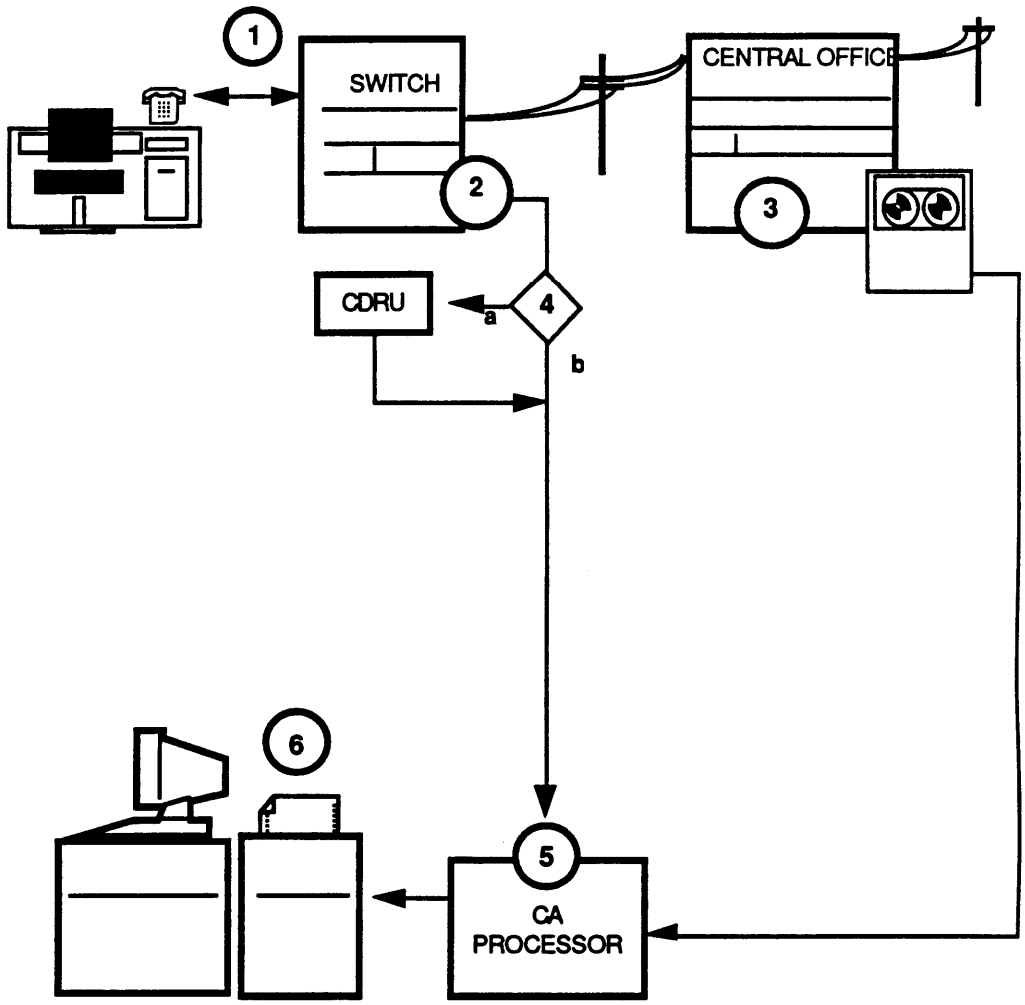

Figure 2-3. Operational Flowchart

NOTE:

CA V2 can accept call-record billing tapes only if the Enhanced Rating I option is installed. Some local telcos offer billing-tape services to their customers to record such charges as credit card calls, collect calls, telegrams, etc., that cannot be recorded by a switch. At the end of a monthly billing period, tapes are forwarded to customers for processing and the data is added to the site's call-record database.

4a. If the switch is connected to a call collector, the call record is stored until the next polling session scheduled with the Integrated Poller occurs.

4b. If the switch is connected to the CA V2 processor, the call record goes directly to the CA V2 input buffer.

5. CA V2 background tasks regulate data transfers from direct switch or CDRU connections. When the CA V2 input buffer reaches its programmed occupancy threshold, call records are processed, rated, and stored in each site's database.

6. Stored call record information from all sources is available for reports.

Hardware Components

The figure below displays typical configurations to support the following functions:

- Standard CA V2 functions for a single site (item numbers 1 to 5)
- AT&T remote maintenance support (item 6)
- Standard CA V2 interface for additional serial ports (items 7)
- Integrated Poller option (item 8)

Table 2-1 lists the components, shown in Figure 2-4, that are supported by CA V2.

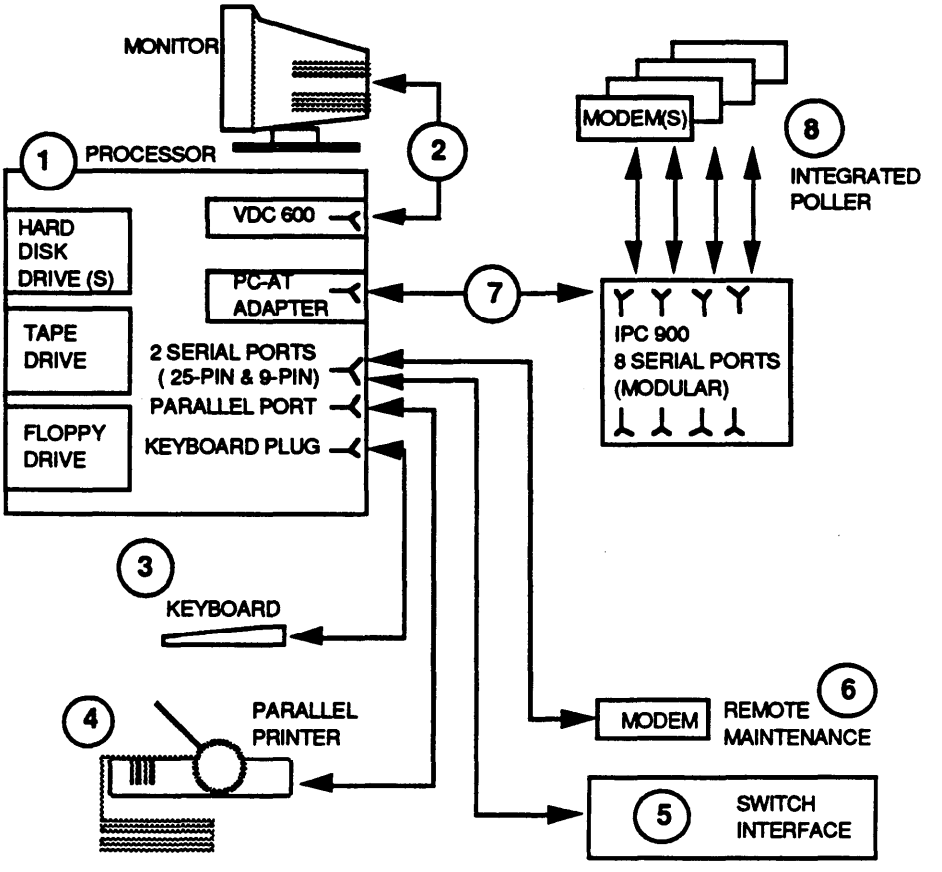

Figure 2-4. CA V2 Hardware Configuration

Table 2-1. CA V2 Hardware Components

Item	Description	PEC
1, 3	**PROCESSOR**	
	6386E/33 WGS Floor Standing — 300-Mb hard disk†	3714-325
	6386/33 WGS Model S Floor Standing — 300-Mb SCSI hard disk‡	3715-328
	† Can install an additional 300 Mb ESDI hard disk (PEC 37735) or 600-Mb SCSI hard disk (PEC 37768) ‡ Can install one or two additional 600 Mb SCSI hard disks (PEC37768)	
2	**VIDEO**	
	Video Display Controller (VDC) 600 board	37376
	323 VGA (monochrome) or 329 VGA (color) monitor	37372 or 37375
4	**PRINTER**	
	Dot matrix printers (not recommended for high volume printing)	
	■ 570 — parallel interface, 80-column carriage, 250 characters per minute	3333-570
	■ 571 — parallel interface, wide carriage, 250 characters per minute	3333-571
	Laser printer (not recommended for more than 3000 pages per month)	
	■ AT&T 593 — parallel, horizontal/vertical print on letter/legal page, 6 pages per minute	
	Parallel interface cable to 6386 WGS	2724-89G
5	**SWITCH INTERFACE**	
	Interface to wall field required — see *Switch Interface for* connectivity details	
	Cable from wall field jack to 6386 or IPC ports — see *Connectivity*	
6, 8	**MODEMS**	
	Hayes Optima (2400 baud) full duplex	63183
	Cable from modem to 6386 or IPC ports — see *Connectivity*	
7	**INTELLIGENT PORTS CARD (IPC) 900**	
	Serial port controller, PC-AT bus adapter, and T-adapter with 8 RJ45 ports	37750

Switch Interface

Figure 2-5 shows the cabling of the listed AT&T switches to a wall field or junction point accessible to a CA V2 installer. Table 2-2 describes the boards, cable, and connector details shown in Figure 2-5.

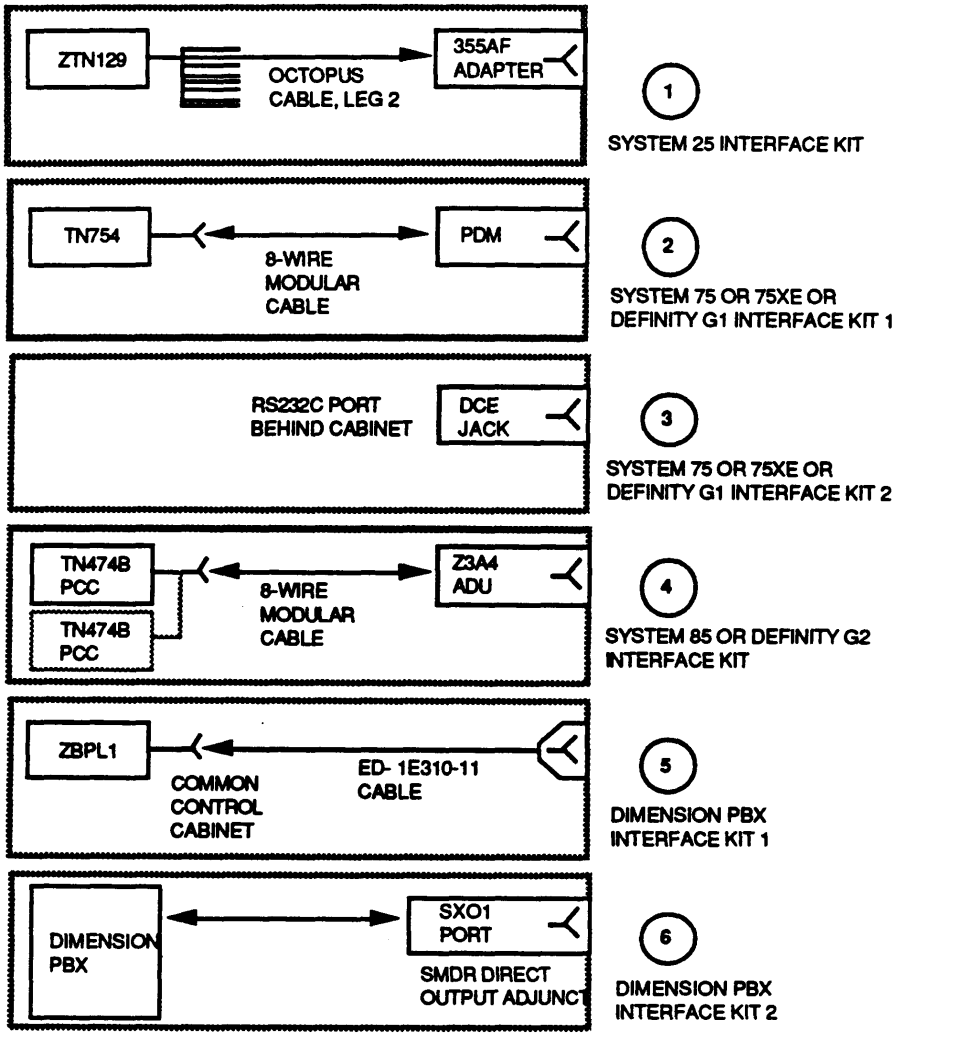

Figure 2-5. Switch Interface Kits

Table 2-2. Switch Interfaces

Item	Description	PEC
1	**SYSTEM 25**	
	ZTN129 processor circuit pack (included with the switch)	
	Octopus cable (15 ft)	2720-05P
	355AF adapter (modular-to-25 pin, female adapter)	2750-A25
2,3	**SYSTEM 75, 75XE, DEFINITY G1**	
	TN754 digital line circuit pack (included with the switch)	
	8-wire modular cable (7-ft/14-ft/25-ft)	2725-07G/N/S
	Processor data module (PDM)	2161-PDM
	DCE 25-pin female jack (included with the switch)	
4	**SYSTEM 85, DEFINITY G2**	
	TN474B PCC pack (included with the switch)	
	8-wire modular cable (7-ft/14-ft/25-ft)	2725-07G/N/S
	Z3A4 ADU (with female DB-25 EIA cord)	2169-004
5,6	**DIMENSION PBX**	
	ZBPL1 circuit pack and cable to common control carrier cabinet or SMDR Direct Output Adjunct, SX01 port — included with the switch	
	ED-1E310-11 cable (50-ft, 6-wire cable, terminated in female DB-25 connector)	96910

Other AT&T and non-AT&T switches that were not listed must provide a wall field with a 25-pin female connector, capable of transceiving RS232C signals, as follows:

- CA V2 sends signals on pin 2 (transmit data — TD), pin 4 (request to send — RTS), and pin 20 (data terminal ready — DTR). The switch must detect DTR so that it does not send records before CA V2 is ready to receive them.

- CA V2 expects signals on pin 3 (receive data — RD) and pin 8 (data carrier detect — DCD). If DCD is not normally supplied by the switch, it must be made active by connecting a jumper wire from an active pin — CTS to DCD or DSR to DCD.

Connectivity

The figure and table below display the cabling configuration for the 6386 and IPC 900 serial ports.

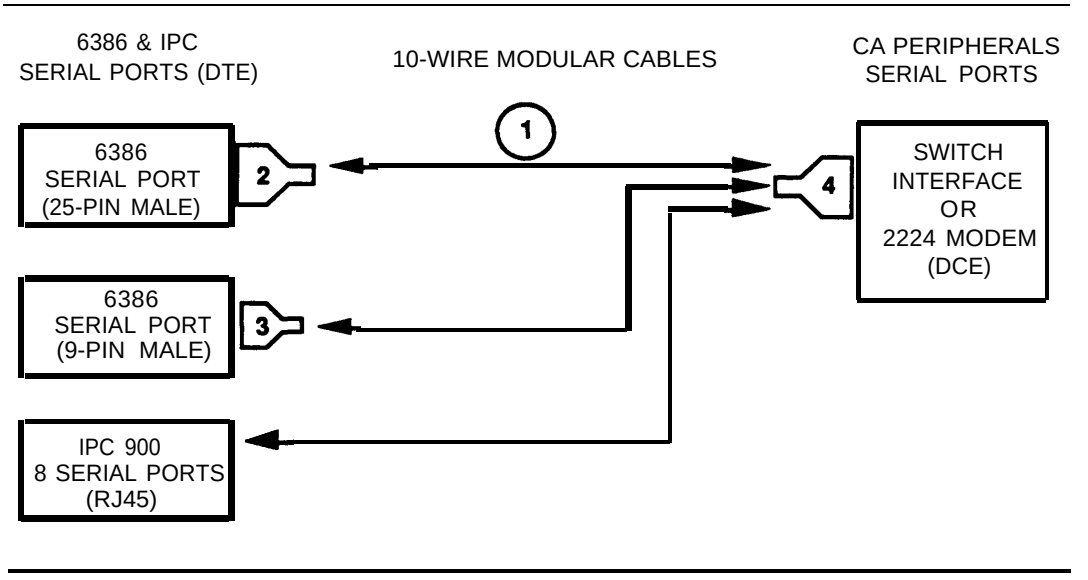

Figure 2-6. CA V2 Connectivity

Table 2-3. Cabling Configuration

Item	Description	PEC
1	10-wire modular cable (RJ45)	37776 (10-ft), 37778 (25-ft), 37780 (50-ft)*
2	ACU/modem connector RJ45-to-25 pin (female)	37788
3	Straight-through connector RJ45-to 9-pin adapter (female)	37802
4	ACU/modem connector RJ45-to-25 pin adapter (male)	37786

* For distances greater than 50 feet, short-haul modems must be used in pairs

System Capacities

The table below displays the maximum capacities of CA V2 databases.

TABLE 2-4. CA V2 Database Capacities

Item	Hard Disk	Capacity
Call Records*	One 300-Mb hard disk	550,000
	One 300-Mb and one 600-Mb hard disks	2,100,000
	One 300-Mb, one 600-Mb and one 1.0-Gb hard disks	4,300,000
	One 600-Mb and two 1.0-Gb hard disks	9,500,000
Extensions	20,000 (Model 10000 Plus)	
Directory Entries Departments Cost Centers	Unlimited	
Account Codes	1,000,000	
Sites	225	
Trunk Groups Facilities Access Codes	50 per site	
Trunks	4000 per site	
Call Types	75 per site	
Dialed Digit Processing	1000 entries per site	

* Calculations based on:

1. A call records is 230 bytes.
2. The CA V2 processor is dedicated to CA V2.
3. CA V2 files are distributed over the physical hard disks in the manner suggested in the *Cost Allocator Version 2.0 Installation* manual (555-006-111).

Call Rating Overview

3

This chapter describes the process of costing a raw call record and the features involved. It is divided into the following sections.

- *Basic Rating* — describes how rate tables work.
- *Carrier Information* — describes the carrier information generated by a site installation.
- *Telephone System Configuration* — describes how the rating structure is determined by the telephone system hierarchy.
- *Call Types* — defines a call type, discusses the difference in basic and custom rated site naming conventions, and lists all defaults.
- *Dialed Digit Processing* —describes how special dialing patterns can be identified and rated by specified methods.
- *Taxes and Adjustments* —describes the tax and adjustment structure and where it fits into the rating process.
- *Rating Sample Call Records* — illustrates a call record and how its components “point” to costing methods.

Basic Rating

Rates for direct-dial and operator-assisted long-distance calls are structured into tables, based on the following factors:

- Distance — computed from a grid of area code (NPA) and exchanges (NXX) between the call origin and destination. This grid plots every NPA/NXX combination into a mileage band with respect to an origin.
- Duration of the call — each mileage band may set a rate for an initial time interval (in seconds) and another rate for subsequent time intervals.
- Carrier rates — Separately purchased rating tables are shipped on disks with up to two carriers services (such as AT&T, Sprint, or MCI) per disk. Local rates are based on a site's local exchange carrier. International rates are computed using the primary or secondary carrier's rates. When the carriers publish new rates the tables can be updated with the `Software Upgrade & Modules` function.
- Rate period in effect at the time of the call — rates vary based on the time of day, day of the week, and holidays. Discounts can be rate-period specific (that is, applied to portions of a call) or not (applied to the entire call, at the rate in effect at the start time of the call).

Local and international rates follow a similar structure, depending on the local billing scheme (fixed, message units, etc.) and country zone (country codes replace the mileage computation by area code/exchange).

The figure below illustrates the use of CA V2 rate tables in costing a 10-minute call to area code 716, exchange 385 (292-mile band) placed on a Friday at 4:55 pm.

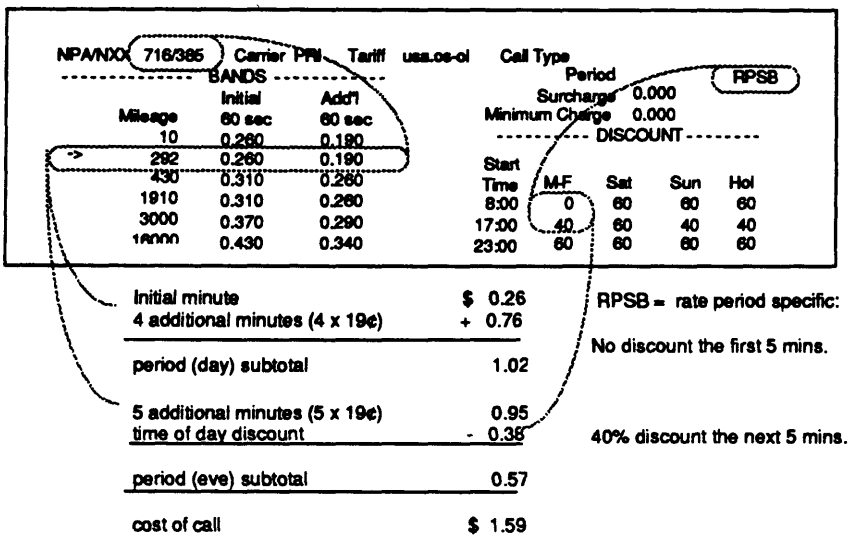

Figure 3-2. Rate-Table Costing

The rate tables can be edited to adjust the rates, time intervals, and discounts (see *Editing the Rate Tables* in chapter 7). However, manually updating rate tables is time consuming and prone to errors. Periodic rate updates are available from AT&T which include area code changes that cannot be added by editing.

Carrier Information

When a site is installed, rate tables are loaded into the processor. When a tariffed *carrier* is indicated in the call-record costing process, these tables are accessed.

After installation is complete, the carriers and other related information can be viewed and/or edited using the `Carrier Information` function. Some data fields are for information only and cannot be edited including the `Carrier Number` and `Carrier Name.` The carrier number is used in the `Telephone System Configuration` function to link a service facility to a carrier rate table. Also provided by the installation, but editable, is the `Carrier Dialing Prefix.` This number is the sequence of dialed digits used to access the carrier's network and appears in a 10xxx format. If you are in an equal-access area, this number should not be changed. If not, the carrier's local phone number, generally a 950xxxx number, should be substituted. These prefixes are most important for identifying and costing nonprimary tariffed calls. Primary rates are used to rate CO calls without dialing prefixes.

A complete description of the `Edit Carrier Information` function and a procedure for its use is in chapter 7, *Database Management Procedures.*

NOTE:

The Enhanced Rating II module allows installation of additional custom carrier services increasing the possible maximum to 8 carrier services per site (each with standard and operator-assisted rating). The Enhanced Rating II document (555-006-511), contains a complete description of the upgraded capabilities this module provides and the procedure for increasing the number of custom rate tables per site.

Telephone System Configuration

In CA V2, your telephone system is configured as a hierarchy to reflect the manner in which a switch groups telephone trunk lines according to the way its site is billed for their use. The CA V2 structure begins with the *site* (the source of call records) and continues with the following levels:

- Up to 50 *trunk groups* attached to a site. A facility group is associated with a type of telephone service or *facility.*
- *Dial access codes* to which the facility groups are connected. A CA V2 site can accommodate up to 50 dial access codes.

- Up to 4000 *trunk lines* per site.

The `Edit Telephone System Configuration` function links a rating method to the telephone system hierarchy so that a basic cost is calculated for each call. The trunk line and site numbers contained in a call record point to a dial access code, where the type of rating (tariffed or otherwise), the rate, and the carrier are identified.

When unidentified trunk lines are reported in a call record they are attached to the dial access code ????? and costed using a CO facility's primary carrier rate table.

Figure 3-3 illustrates the CA V2 telephone system structure and how it translates to data entry in the `Edit Telephone System Configuration` screen. As you can see from the sample data-entry screen, rating information is defined at the third detail level. A complete procedure for the data entry is located in chapter 7, *Entering the Telephone System Configuration.*

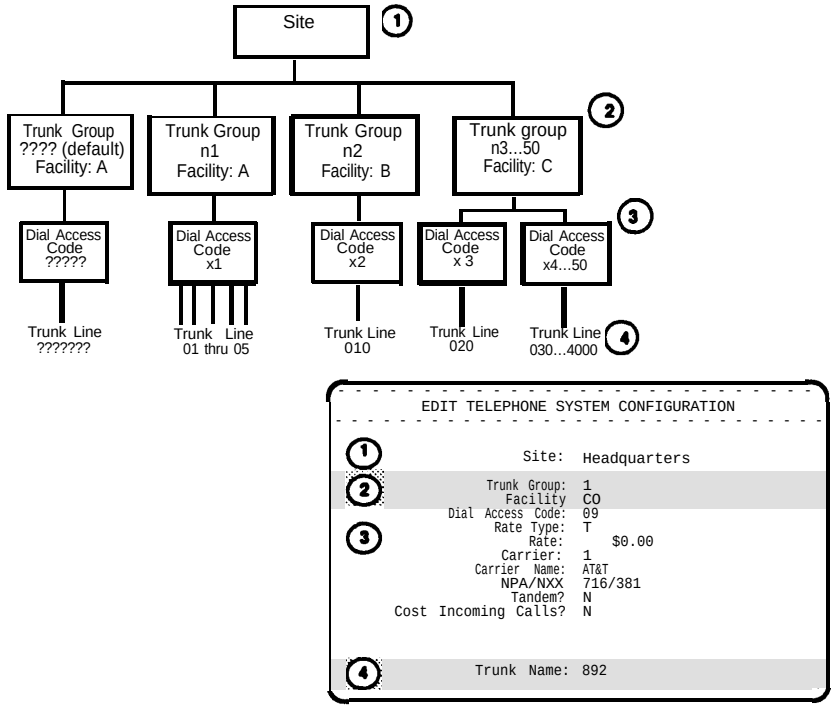

Figure 3-3. Sample Telephone System Configuration

Call Types

A call type is the name that categorizes each call. The process of identifying and categorizing calls serves the following purposes:

- It allows cost adjustments to be made to a group of calls that may be using several different rating schemes.
- It allows reports to be generated on the basis of call types to show how your facilities are being used.

A call is named on the basis of its type of costing (tariffed or nontariffed), as defined for each facility in the `Edit Telephone System Configuration` function.

Calls that are costed with a tariff rate table are generally associated with a CO facility. A CO facility assigns internally-derived call-type names that reflect the destination of the call.

The following call-type naming conventions are used:

- National calls: LOCAL (local calls for the site), IS-IL (in-state, in-LATA), IS-OL (in-state out-of-LATA), OS-IL (out-of-state, in-LATA), OS-OL (out-of-state, out-of-LATA)
- Other calls: IDDD (international direct dial), INCOM (incoming), SPCL (special number from the dialed digit processing table), ZERO+ (operator assisted)

For nontariffed (flat rate) facilities, call-type names are user-defined, and are generally derived from the facility name assigned in the `Edit Telephone System Configuration` function. For example, a facility using a tie-line service would be named *TIE1* and the calls determined to be using that facility would have the call type name *TIE1.*

NOTE:

You create call types to identify the types of calls received on tape using `Edit Tape Rating Configuration` (a function of the Enhanced Rating I module). A complete procedure to identify call records received on tape is in the Enhanced Rating I document, (555-006-510).

CA V2 provides the following default list to be used to name facilities, call types in the Dialed Digit Processing table, or call types for records received on tape. Call types introduced using the `Edit Telephone System Configuration` function are added to the default list.

CCSA	Common Control Switching Arrangement (private network)
DILIT	Dial-it service (weather, time, etc.)
FX	Foreign exchange call
IWTSn	Incoming (only), band n WATS call
MAT-N	Marine/aircraft/train call, originated in North America
MAT-O	Marine/aircraft/train call, originated overseas
MOB-N	Mobile phone call, originated in North America
MOB-O	Mobile phone call, originated overseas
MSNGR	Messenger service call
MTS-I	Measured call, international
MTS-M	Measured call, marine/aircraft/train
MTS-N	Measured call, North America
MTS-O	Measured call, originated overseas
MTS-R	Measured call, radio linked
NDC-N	Nondial conference call, originated in North America
NDC-O	Nondial conference call, originated overseas
PICPH	Picture phone call
RADIO	Radio link call
SPRAD	Sent paid radio link call
TELGR	Telegram
TIE	Tie-line call
VERFY	Verification service call
WATS	Outgoing WATS line (1-6)
IWTS	Incoming WATS line (1-6)

Use the `Call Type Adjustments` function to view the list and/or adjust the call-type default values in the list that follows.

- Minimum duration - or the call is thrown out (default = 30 seconds for most call types)
- Minimum charge - if the recorded charge is less than the minimum, then the minimum is stored in the call record (default = $0.00)
- Markups, surcharges and tax exemptions charges are added or subtracted from the reported cost of a call (markup/surcharge default = $0.00, tax exemptions default = N)
- Network correction time is subtracted from a call's duration to account for dialing, connecting, or other non-conversational activity (default = 15 seconds)

In the rating process, the call type database is referred to twice. The first time to make minimum duration comparisons and network corrections. Other call-type adjustments are made before a call's cost is reported.

Dialed Digit Processing

CA V2 includes a default dialed digit processing (DDP) table for each site, with values similar to those in Table 3-1. Use the table is to identify special dialed number patterns that require additional processing to be properly interpreted and rated. The dialing pattern can require special processing for a specific trunk group or applicable to all trunk groups.

During rating, the dialed digits reported on the call records are compared to the DDP table and, upon a match, one of several actions occur:

- The call is discarded, or
- It is rated according to the information in the DDP table and substitute digits are inserted if specified.

The default table handles most of the dialed number exceptions, such as those listed below, and may not require any additions or corrections.

- Operator-assisted calls are directed to use the primary carrier's operator-assisted rates; the call type is set to ZERO+.

NOTE:

Operator-assisted calls dialed via MCI's equal-access code (10222) are directed to use the special-purpose trunk group 9999 that takes care of costing at secondary carrier's rates. If a site's rate tables do not contain MCI'S rates for secondary carrier, this DDP entry for equal-access code should be changed.

- Calls to directory assistance, "dial-it" services, and 800 and 900 service numbers are costed at special rates (these values should be updated at installation, as they may vary for each locality); the call type is set to SPCL.
- Incompletely dialed calls are identified and discarded.

Table 3-1. Default Dialed-Digit Processing Table

Search for:	Cost As:					
Dialed Digits	Cost Rate Method	Trunk Group	Dialed Digits	Call Type	Sub. Digits?	Explanation
0%	Trunk $.00			ZERO+	N	Operator assisted calls
011????????%	Trunk $.00				N	International direct dial
10???0%	Trunk $.00		0%	ZERO+	Y	IXC operator assisted
10???011%	Trunk $.00		011%		Y	IXC international
411	Per call $.43			SPCL	N	Local information
?411	Per call $.43			SPCL	N	Local information
911	Per call $.00			SPCL	N	Emergencies
?11	Per call $.00			SPCL	N	Other services
5551212	Per call $.43			SPCL	N	Local information
?5551212	Per call $.43			SPCL	N	Local information
???5551212	Per call $.60			SPCL	N	Long distance information
????5551212	Per call $.60			SPCL	N	Long disttance information
800????????%	Per call $.00			SPCL	N	Toll-free numbers
1800????????%	Per call $.00			SPCL	N	Toll-free numbers

Table 3-1. Default Dialed-Digit Processing Table (concluded)

Search for: Dialed Digits	Cost As: Cost Rate Method	Trunk Group	Dialed Digits	Call Type	Sub. Digits?	Explanation
900???????%	Per min $.50			SPCL	N	900 service numbers
1900????????%	Per min $.50			SPCL	N	900 service numbers
976????	Per min $.50			SPCL	N	Dial-it services
?	Discard				N	Incompletely dialed call
??	Discard				N	Incompletely dialed call
???	Discard				N	Incompletely dialed call
????	Discard				N	Incompletely dialed call
?????	Discard				N	Incompletely dialed call
??????	Discard				N	Incompletely dialed call

Some instances when you should add to the dialed-digit processing table are:

- To identify specific dialing patterns as a particular call type.
- To cost calls with “speed-dialed” numbers. Some switches report speed-dialed numbers as the call prefix instead of the full carrier access code. To cost the call, substitute the full carrier access code.
- To recognize and report the call destination when a second access code on a tie line (dialed to place an off-network call) or a routing code (RNX) for networks such as ETN are used. Replace the codes with the appropriate area code and exchange.
- To mask sensitive phone numbers or lines that require privacy. Replace the last 4 digits dialed by a masking number — for example 9999.
- To identify specific incoming calls on an ANI trunk and apply a billing scheme to them.

A complete procedure for changing the DDP table is in chapter 7, *Editing the Dialed-Digit Processing Table.*

Taxes and Adjustments

CA V2 allows taxes and adjustments to be applied to telephone usage through several functions. Using the `Edit Site Information` function, you define a tax structure for each site by indicating a percentage in each category: federal, state, county, and other. In both the `Call Type Adjustments` and `Cost Centers` functions, exemptions are assigned to any of the four categories. To apply a tax to a call, the conditions in both databases, call type and cost center, must agree.

Markups (or discounts) and surcharges are applied in the following manner:

- Call type markups and surcharges are applied, in a prescribed formula (detailed below), after the telephone system configuration or the DDP database has determined the call type. The call type database also contains each type's minimum charge.

- Cost center markups can be applied after the extension reported on the call record identifies an owner and, in turn, a cost center.

When a call record is processed, it is rated according to a tariff, a per-call or per-minute rate, or a DDP entry. That amount is stored in the call-record database. The greater of the following two values is the reported cost of a call:

- Call Type Minimum Charge

- [Call Cost + (Call Cost $\times$ Markup $\times$ 0.01) + Surcharge] $\times$ [1 + (Tax $\times$ 0.01)]

In detail reports, taxes are shown on a separate line directly above the subtotal; in summary reports, taxes are included in the subtotals and totals.

NOTE:

If the Enhanced Chargeback module is installed, taxes for federal, state, local, and other categories are defined and attached to any service or piece of equipment included in the system. A complete process for enabling these taxes is described in the Enhanced Chargeback document (555-006-512).

Rating Sample Call Records

The following figure shows how CA V2 rates several sample call records. The numbers reference the listings below the illustrations.

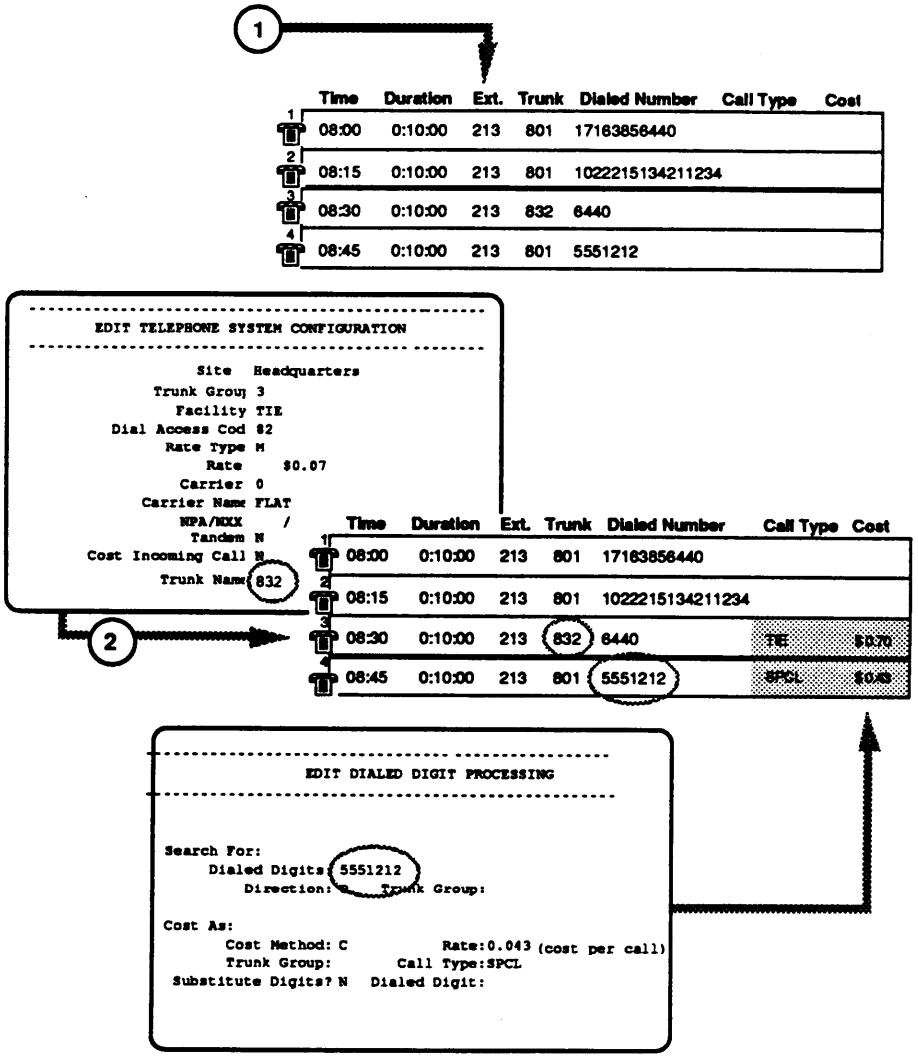

1 Extension 213 places four calls.

2 The telephone system configuration identifies the cost of a TIE call using the reported trunk to identify the associated dial access code and its billing scheme.

3 The sequence of the dialed numbers matches an entry of the DDP table. The call is assigned the SPCL call type.

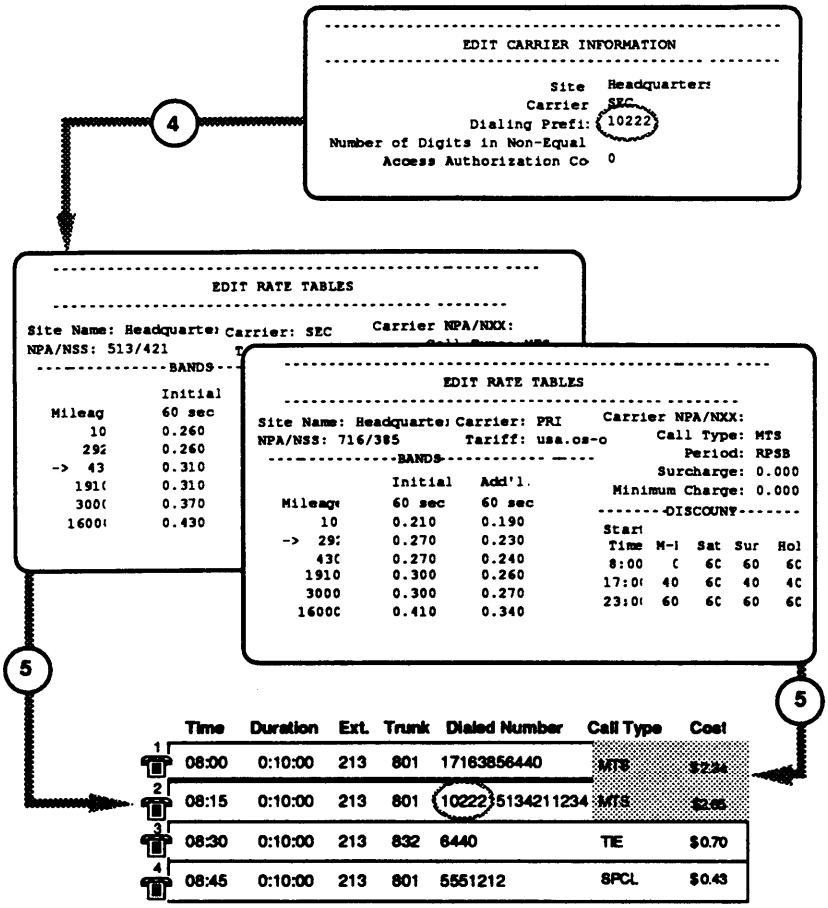

4 The carrier information identifies the secondary carrier.

5 The rate tables finad the distance to the area called and calculate the cost of long-distance calls using the appropriate carrier's table.

Figure 3-4. Call Costing

User Interface

4

In general, CA V2 has three types of users, determined by their security levels: operators who manually generate reports (Level 1), operators who generate reports and perform database maintenance (Levels 2 and 3), and a system administrator (Level 4).

This chapter describes the system's physical appearance and the use of the menu system and data entry screens. It is divided into the following sections:

- *Logging In* — describes how to access the CA V2 application.
- *Using the Menu System* — describes the appearance of the menu system and how to access functions.
- *Using the Data Entry Screens* — describes how to use the data entry screens to complete a database management function or to generate a report.
- *Using Keyboard and Database Commands* — describes special functions associated with the keyboard and how to use CA V2's database commands.
- *Using Online Help* — describes how to use the online help feature.
- *Changing Color Settings* — describes how to create menu color schemes.
- *Logging Off* — describes how to leave the CA V2 application.

Logging In

To access the application, log into CA V2 using the *login ID* assigned to you as part of the security feature, `"cav2"` for example.

```
login: cav2
```

NOTE:

Your CA V2 login ID cannot be the same as your UNIX system login.

The system prompt `Password:` appears.

Provide your password if you have one. The CA V2 main menu, similar to the one shown in Figure 3-1, appears on display.

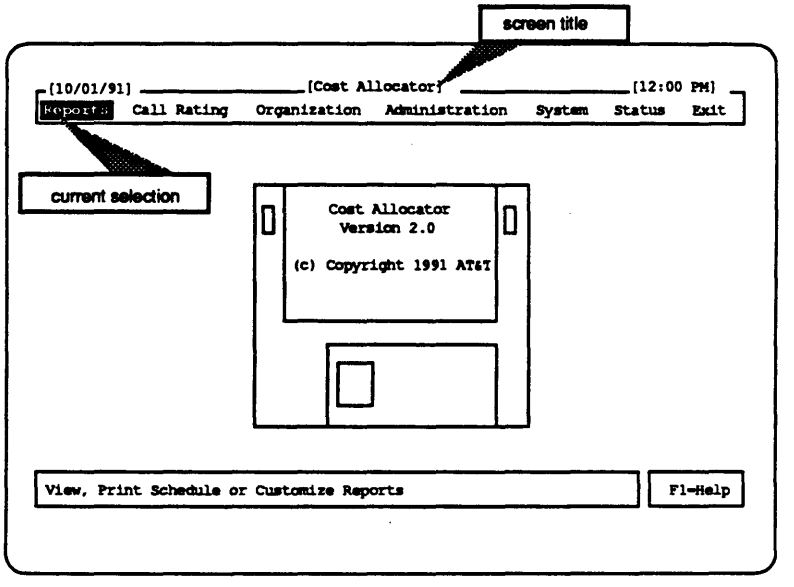

Figure 3-1. CA V2 Main Menu

Using the Menu System

CA V2 uses a pulldown menu system. When the main menu appears on the screen, the cursor, represented by a contrasting color bar (reverse video bar on a monochrome monitor), highlights the current selection. You can select another item in several ways:

- Use the left <←> and right <→> arrow keys. To access the selection, press the <ENTER> key.
- Enter the selection's *key letter* — the character in a contrasting color (or the underscored character if you do not have a color monitor). The cursor goes to the appropriate item and its menu automatically appears.

When a selection is accessed, its menus and/or functions are displayed. The > symbol next to an item indicates that a further menu level exists.

- Use the left <←> and right <→> arrow keys to access the menus and/or functions of the other main menu items.
- Use the up < ↑ > and down < ↓ > arrow keys to move to the selection's other menus or functions.
- Press <ENTER> to access a lower menu level or a data entry screen of a selected function.
- Press <F1> to access the *help* reference material for a selected item. For further information, see the section *Using Online Help* later in this chapter.
- Press <ESC> to close the current menu and return to the previous level.

Figure 3-2 shows a sample of the CA V2 menu.

NOTE:

Certain menu items are not available to all users. Selections that are not available appear in a different tone and are skipped over by the cursor. This occurs for several reasons:

- The security feature of CA V2 confines user functionality by limiting menu access.
- Menus or functions pertaining to CA V2 options are available only if the option is installed.

A complete list of functions classified by security level appears in appendix B.

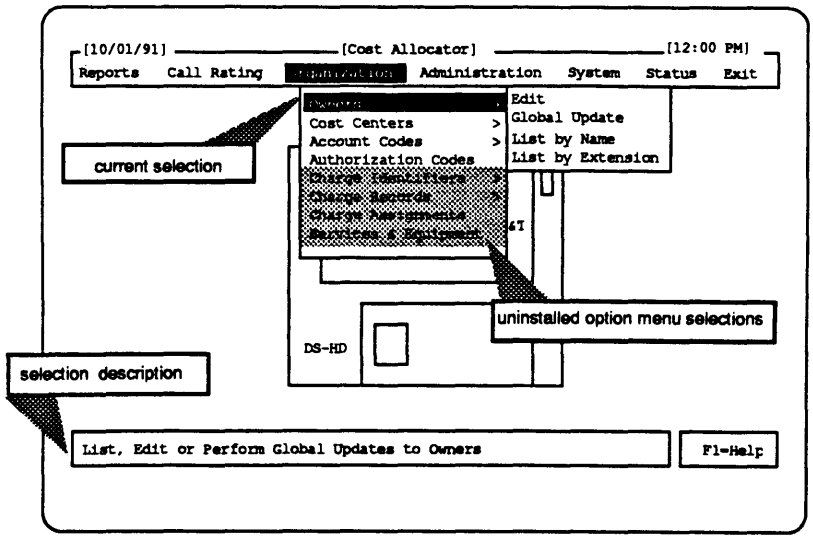

Figure 3-2. Sample CA V2 Menu Structure for User Security Level 2 and Above

Using the Data Entry Screens

When a function is accessed by a menu selection, CA retrieves all records in the file associated with that function and displays its first record on the screen. This display, similar to Figure 3-3, serves as a data-entry screen to initiate or complete a database management function or to generate a report.

Most data entry screens have these elements in common:

- *Commands.* Located at the top of the screen, the list of available commands is displayed along with a brief description of the command that is selected. A summary of database commands is in a later section of this chapter.

  Use the left and right arrow keys to change selections; execute the selected command by pressing <ENTER> or typing the command *key letter* (for example, <U>pdate).

- *Data Fields.* These are highlighted areas where the information you exchange with the system appears. Fields show portions of database records — such as `Last Name` or `Extension` — that are stored or retrieved by the system.

  When a command that involves data entry is initiated, the cursor moves to the first information field. At this point, use your terminal keyboard as a regular typewriter to enter the data.

- *Comments.* Notes, prompts, command instructions, and messages displayed on the bottom half of the screen guide you through the data entry session. Helpful information, system messages, error messages, and warnings are displayed here.

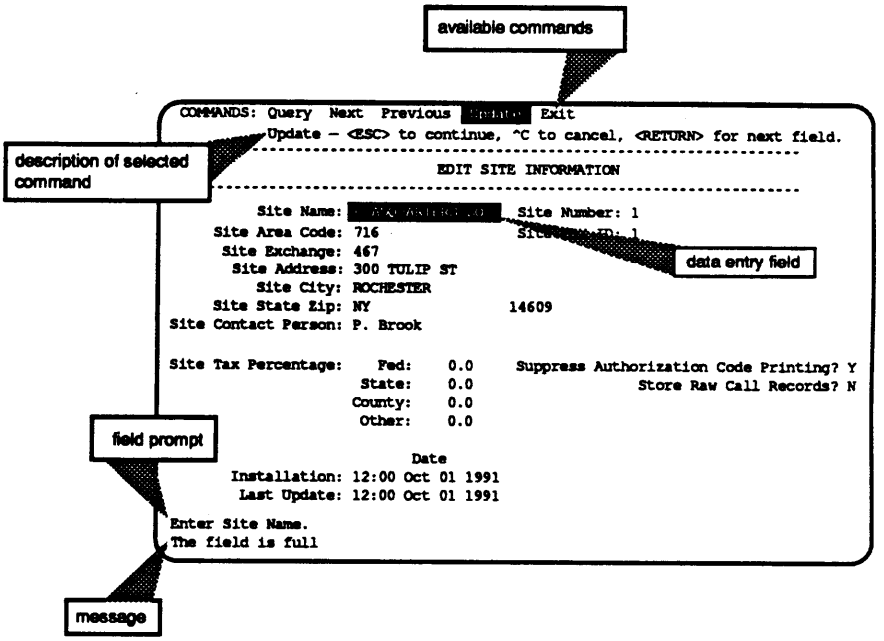

Figure 3-3. Sample Data-Entry Screen

Using Keyboard and Database Commands

Table 3.1. Keyboard Commands

Display or Cusor Control Key	Action
► ◄ ▼ ▲	In a menu, arrows move the selection in the direction of the arrow; in data entry, they move the cursor one character (or one field) in the direction of the arrow.
[ENTER]	(Referred to as <RETURN> in on-screen instructions) In a menu, <ENTER> executes the selected function; in data entry, it moves the cursor to the next data entry field.
[Ctrl][C]	<Ctrl-C> aborts the current operation — except generating a report — and redisplays the current data entry screen. You may initiate another operation or press <E>xit to return to the previous menu.
[F1] or [Ctrl][W]	In a menu, <F1> displays the on-line help window for the current menu selection or data-entry screen before a command has been initiated. In data entry, it displays a menu window of allowable values for the field where the cursor is positioned. Not all data fields have this feature. Where available, the window highlights the current selection (“COST CENTER 01” in the sample below). Move down the list with the <SPACEBAR> or arrow keys. <RETURN> places the value in the data field; <Ctrl-C> returns to the screen without a value. **Select Item** COST CENTER 01 COST CENTER 02 COST CENTER 03 COST CENTER 04
[ESC]	In the menu system <ESC> closes the last window opened. In data entry, it completes such database commands as <Q>uery, <A>dd, <U>pdate, or <R>emove.
[Ctrl] [U]	In a data-entry screen, <Ctrl-U> clears the field where the cursor is located.
[Ctrl] [R]	<Ctrl-R> refreshes the display.

Table 3-2. Database Commands

Command	Operation
[Q] = <Q>uery	Displays selected records in the data files. To enter selection criteria, press <Q> and type information in key fields. When complete, press <ESC>. This generates a list of matching records. Pressing <ESC> without any search criteria generates the entire list.
[N] = <N>ext [P] = <P>revious	Displays the next and the previous sequential record from an entire file or from a list retrieved by <Q>uery.
[A] = <A>dd	Creates a new record. Values for key fields must be provided (the prompt at the bottom of the screen assists you with the information expected in each field). When complete, press <ESC>. The bottom of the screen will display "Record added" if the operation is successful, or an error message otherwise.
[U] = <U>pdate	Changes the contents of the record appearing on the screen. To change the record, simply type over the fields that require changes. When complete, press <ESC>. The bottom of the screen displays "Record updated" if the operation is successful, or an error message otherwise.
[R] = <R>emove	Deletes the record appearing on the screen. When complete, press <ESC>. The bottom of the screen displays "Record deleted" if the operation is successful, or an error message otherwise.
[D] = <D>etail and [M] = <M>aster	In a hierarchical file, move from the master record on display to its detail records, or vice versa. For example, the Telephone System Configuration file is structured as a hierarchy of SITES, FACILITY GROUPS, ACCESS CODES, and TRUNK LINE records. If a SITE record is on display, <D>etail accesses the set of FACILITY GROUP records and displays the name of its first facility group on the screen. From that FACILITY GROUP record, <D>etail displays the name of the first ACCESS CODE record under that facility group (and finally the first TRUNK LINE record under that access code). At any point in the hierarchy, <M>aster brings you back up to the previous level.
[G] = <G>enerate	Compiles a report with the configuration appearing on display. Depending on the output method, the report is sent to a file, a default printer, or one of nine defined devices.
[T] = <T>ransfer	Change ownership of key fields, allowing you identify and then transfer the selected data field from "source" to "destination." This command is used in the *Global Cost Center Update* function.
[L] = <L>oad	Copies the selected file into the database.
[E] = <E>xit	Leave a data entry screen and returns to the previous menu.

Using the Online Help Feature

You can access the pull-down menu system for online help from any menu item, or from within any function screen (prior to initiating a command that requires data entry). Press <F1> to cause a help screen, similar to the one below, to appear. The information, or *topic,* may contain capitalized words in a contrasting color (or in boldface type on monochrome monitors) that allow access to other cross-referenced topics.

The following keys enable movement between topic pages, cross references, and other topics from the help menu system.

- Up/down arrow keys — pages back and forth within a topic
- Left/right arrow keys — moves the cursor between cross-references within a topic
- <ENTER> — selects a cross-reference and causes its topic to appear on the screen
- <BACKSPACE> — returns the previous topic to the screen
- <F1> (from within the help menu system) — accesses brief instructions for using the on-line help
- <?> — causes a complete list of help topics to be displayed
- <E> — exits online help and returns to CA V2

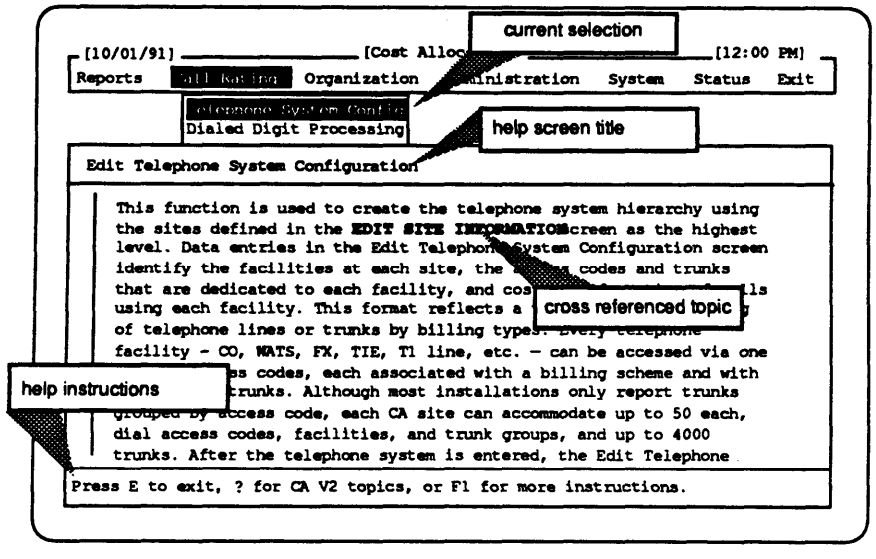

Figure 3-4. Sample CA V2 Online Help Screen

Changing Menu Color Settings

CA V2 allows each user to create their own menu color scheme. In this way, individuals can tailor the displays to accommodate personal preferences, physical considerations such as eyesight or strain, and/or environmental considerations such as lighting levels. Upon login, the color configuration conforms to the most recently defined color settings.

Procedure

1. From the CA V2 main menu, select `System`, then `Menu Color Settings`. A screen similar to the one in the figure below appears.

2. Select the item to change color. A menu window appears listing all the available color choices. Select a new color from the menu and <ENTER>. As you make menu color changes, a sample menu allows you to see the latest color scheme.

3. Make as many other color changes as you like. Press <ESC> to leave the function without making any color changes, or select `Save` and press <ENTER>. The screen "repaints" with the new colors.

4. Press <ESC> to return to the menu system.

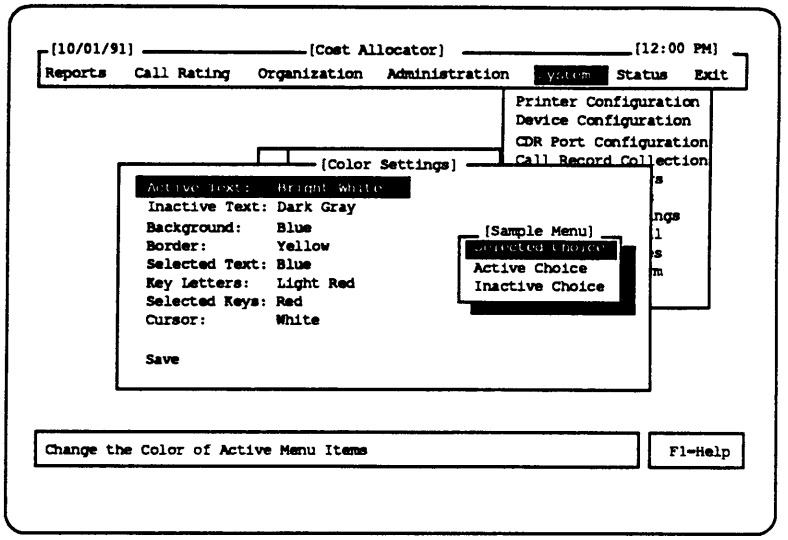

Figure 3-5. Sample Color Settings Screen

Logging Off

Procedure

1. To leave the application, select `Exit` from the main menu.
2. Press <RETURN> to confirm the exit, or select another item from the main menu.

An exit-confirmation message, `Leaving the AT&T CA V2...,` and the `Login` prompt appear.

Setup Procedures

5

This chapter details the procedure for customizing CA V2 after the AT&T installer verifies the installation and releases the system to you. This chapter is addressed to the system administrator to help finalize CA V2's setup and begin call processing and reporting.

NOTE:

Procedures to update or edit the functions mentioned in this chapter and descriptions of the data-entry fields, are located in chapter 7, *Database Management Procedures.*

This chapter is divided into the following sections:

- *Installation Review* — contains a brief review of the installation process to allow a clear understanding of the condition of the system before customization.
- *Setting Up CA V2 System Parameters* — details those setup processes that have a system-wide effect.
- *Setting Up Site Parameters* — details those setup processes that add a site to the system and enable each site to be unique.
- *Creating the Organization Tables* — details the procedure for developing a company's organization hierarchy for the allocation of call-record information.
- *Final Preparations* — details the last operations necessary before CA V2 can begin processing calls and generating meaningful reports.

Installation Review

The CA V2 installation process can be divided into three parts.

1. The AT&T account team meets with a group from your business to decide what your call accounting needs are. Hardware and software components are ordered. A preinstallation interview is conducted and planning forms are distributed. Guidance is given to fill them out completely and accurately.

2. AT&T installation technicians install the hardware, operating system, and basic software. Some system and site configuration is performed (generally the minimum required to verify that call-record collection from direct-connect sites is operating properly).

3. You (the system administrator) and other users added to the system, finalize the installation by loading rate tables for remaining sites, loading optional modules, and completing customization of the system/sites with data from the planning forms. This chapter contains the procedures to finalize the system. The diagram below displays this process.

Consult *Cost Allocator Version 2 Installation and Verification,* 555-006-111, for a description of the installation process. Documentation for installation of options is included in the module packages.

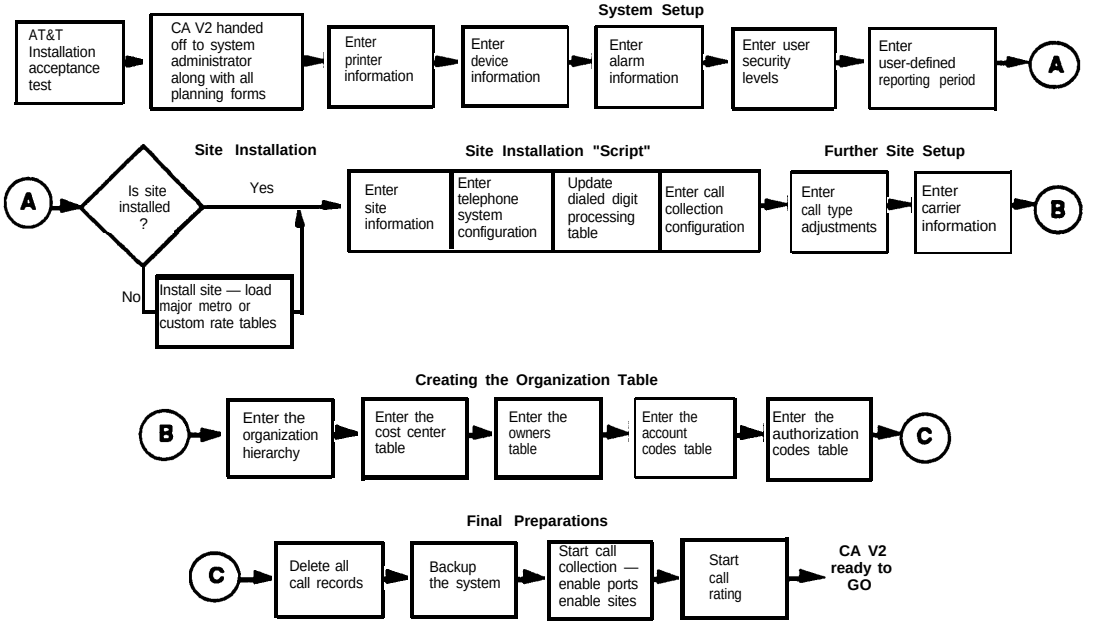

Setting Up CA V2 System Parameters

Use the procedures described in this section to define parameters that impact all sites in the system.

Entering Printer Information

To output reports, CA V2 defines two default print spoolers: an 80-column printer for standard reports and a 132-column printer for wide reports. These printers are utilized for on-demand printing when a “P” is indicated as a report’s output method, or for printing reports that have previously been output to a file. CA V2 automatically chooses the correct print spooler based on the size of the report. This function is used to define the two default printers.

NOTE:

To invoke a compressed printing mode that allows an 80-column printer to output 132-column reports, include the output modifier “wide” in your 132-column print spooler pathname.

Procedure

1. Locate the *System Parameters* planning form.
2. From the main menu, select `System`, then `Printer Configuration`. A screen similar to the one below appears.
3. Press <U>pdate and enter the information from the planning form in the corresponding data-entry field. When complete, press <ESC> to save your entries and return to the command line.
4. Press <E>xit to return to the menu system.

```
COMMANDS: Update Exit
          Update – <ESC> to continue, ^C to cancel, <RETURN> for next field.
-----------------------------------------------------------------
                                PRINTERS
-----------------------------------------------------------------

  80 Col. Printer:  epson
     Spooler  Path:  lp
 132 Col. Printer:  epson
     Spooler  Path:  wide  epson|lp
```

Entering Device Information

In addition to the default printers, CA V2 allows up to nine other devices — for example, a laser printer, a tape, or another program — to be configured for output.

Procedure

1. Locate the *System Parameters* planning forms.

2. From the main menu, select `System,` then `Device Configuration.` A screen similar to the one below appears.

```
COMMANDS:  Update  Previous  Next  Exit
           Update – <ESC> to continue, ^C to cancel, <RETURN> for next field.
-----------------------------------------------------------------------
                                  DEVICES
-----------------------------------------------------------------------
     Device Name 1:  laser
     Device Path 1:  wide hplaser|lp -d laser

Enter Device 1 Name.
```

3. If necessary, press <N>ext or <P>revious until record 1 appears on the screen.

4. Press <U>pdate and enter the information for device 1 from the planning forms in the corresponding data-entry field. When complete, press <ESC> to save your entries and return to the command line.

5. Use <N>ext to bring record 2 on the screen and repeat step 4. Continue in this manner until all devices listed on the planning form are entered.

6. Press <E>xit to return to the menu system.

Entering Alarm Information

CA V2 provides the ability to define a sanity port and an alarm port.

If a sanity port is specified, a continual process sends it a character every 8 seconds. Failure to receive the character signals an alarm.

The alarm port is used in conjunction with AT&T's Trouble Tracker. Trouble Tracker is a separately purchased service that provides support when serious system problems occur. CA V2 sends special portions of log records to user-designated Trouble Tracker locations identified by telephone numbers. CA V2 allows two remote locations to receive the alarm files, each with a primary and a secondary telephone number.

NOTE:

As with all ports on devices running under the UNIX system, a port number is assigned in a *tty00* format. The ports, their numbers, and their purpose are listed in the planning forms.

Procedure

1. Locate the *System Parameters* planning form. If the alarm parameters section is not filled in, proceed to *Entering Security Levels* on the next page.

2. From the main menu, select `System`, then `Alarm Parameters.` A screen similar to the one below appears.

```
COMMANDS: Update  Exit
          Update the displayed record
-------------------------------------------------------------
                          EDIT  ALARM  PARAMETERS
-------------------------------------------------------------
System Sanity Port:
         Baud Rate:  1200 Data Bits: 8   Stop Bits 1   Parity:None

        Alarm Port:
         Baud Rate:  1200 Data Bits: 8   Stop Bits 1   Parity:None

     Originator ID:

 Telephone Number      Destination :              Destination :
        Primary:
      Secondary:

Last Destination 1 Messag
NO PREVIOUS MESSAGES
Last Desgination 2 Messag
NO PREVIOUS MESSAGES
```

3. Press <U>pdate and enter the information from the planning form in the corresponding data entry field. When complete, press <ESC> to save your entries and return to the command line.

4. Press <E>xit to return to the menu system.

Entering a User-Defined Reporting Period

Use this procedure to define unique reporting periods, such as every three weeks or from month to month beginning on the 15th, etc. You must enter all the dates needed to accommodate a unique scheme. Identify the beginning of the year by clearing the year-to-date totals. Entering the reporting period “U” refers CA V2 to this list of user-defined dates.

If a single date is entered, CA V2 assumes the reporting period is monthly, beginning on that date. The date is also understood to begin the fiscal year. CA V2 automatically tracks the reporting periods and resets the year-to-date totals when the new fiscal year begins. The following default monthly setup can be changed if necessary:

`Period Start Date: Jan 01` *(current year)*
`Clear Year-To-Date Totals?` **Y**
`Run Date: Feb 01` *(current year)*

Procedure

1. Locate the *System Parameters* planning form.

2. From the main menu select `Administration,` then `Reporting Period.` A screen similar to the one below appears.

3. Press <A>dd and enter the first date and other information from the planning form. When complete, press <ESC> to save your entries and return to the command line.

4. Repeat step 3 until all dates have been entered.

5. Press <E>xit to return to the menu system.

```
COMMANDS:  Add Update Next Previous Remove Exit
           Add a record to the database
-------------------------------------------------------------
                    EDIT USER DEFINED REPORTING PERIOD
-------------------------------------------------------------

                     Period Start Date:  1/10/91
              Clear Year-To-Date Totals?  N
                               Run Date:  1/11/91
```

Entering Call-Record Information

This section describes the process to define certain characteristics about the entire call-record database.

Procedure

1. Locate the *System Parameters* planning form.

2. From the main menu, select `System`, then `System Parameters`. A screen similar to the one below appears. **(Fields that do not pertain to the call record information are shaded.)**

```
COMMANDS: Update Exit
          Update the displayed record
-------------------------------------------------------------------------
                          EDIT SYSTEM PARAMETERS
-------------------------------------------------------------------------
                                Company Name
          ABC Company
                        Organization Level Headings
 REGION    :DIVISION       :DEPARTMENT          :UNIT

                     Applications Interface Information
     System Name:
    System Path:
   Transfer Time:
 Sequence Number:
                                                                   Days
  Privacy Option? Y                      Call Record File Retention: 0
    Store Locals? Y                        Raw SMDR File Rentention: 3
    Min Duration: 0:00:02                    Report File Rentention: 75
```

3. Press <U>pdate and enter the information from the planning form in the following fields:

   - `Privacy Option`
   - `Store Locals`
   - `Min Duration`
   - `Call Record File Retention`
   - `Raw SMDR File Retention`
   - `Report File Retention`

4. When complete, press <ESC> to save your entries and return to the command line.

5. Press <E>xit to return to the menu system.

Setting Up Site Parameters

This section describes the procedures to install a site and enter information to make each site unique.

Installing a Site

Create each site by identifying a site number for a set of rate tables and loading the rate tables into the system.

Rate tables are ordered and shipped separate from the CA V2 software package. Make sure you have rate table disks for the sites you are installing before you begin. Check the disk's label or order form for identification of the area code and exchange (NPA/NXX) of the rate tables it contains. You will need to confirm the NPA/NXX to complete the installation.

NOTE:

To perform a site installation you must access CA V2 using the login created to install your software. Generally CA V2 is installed using the login **ca.** The installation login is part of the information passed on to you (the system administrator) from the account team.

Procedure

1. Locate the *Site Information, Telephone System Configuration, Dialed Digit Processing with Default Dialed Digits,* and *Call Record Collection Information Part I* planning forms. Be ready to supply the root password when prompted.

2. From the main menu, select `Administration,` then `Site Installation.` Messages begin to appear on the screen. The first, similar to the text below, informs you that rating is being stopped and asks for confirmation of the site number.

```
----------------------------------------
     Install Site - Stop Rating
----------------------------------------
Call Rating running.
Call Rating stopped.

Use site number: (4)?
```

CA V2 numbers the sites in the order they were installed. Generally, you should press <ENTER> to confirm the site number selected by CA V2 or enter any number between 1 and 255 and press <ENTER>.

NOTE:

Duplicate site numbers are not acceptable.

A message similar to the one below appears.

```
-------------------------------------
                 Install Site
-------------------------------------
Ready to read in site software from media.
Note: Only one site can be installed at a time.
Please enter the root password when prompted below.
Password:
```

3. Enter the password, place the disk in the drive and press <ENTER>.

4. When prompted, remove the diskette from the drive. Compare the NPA/NXX displayed to the one on the disk's label or order form. If necessary, press <E>xit then <RETURN> to abort the installation. Or press <RETURN> to confirm the the installation and update site system tables (DDP, carrier information, etc.).

   When complete, a series of screens to configure the newly-installed site are automatically displayed.

Entering Site Information

The `Edit Site Information` screen appears first, similar to the example below.

```
COMMANDS  Query Next Previous Update Exit
          Query database for record
-----------------------------------------------------------------------
                          EDIT SITE INFORMATION
-----------------------------------------------------------------------
           Site Name:
         Site Number:  1
         Site PBX ID:  M35529-001
        Site Address:
           Site City:
     Site State Zip:
 Site Contact Person:
          Site Phone:

 Site Tax Percentage:    Fed: 0.0  Suppress Authorization Code Printing?  Y
                       State: 0.0                Store Raw Call Records?  N
                      County: 0.0
                       Other: 0.0
```

The field described below is for informational purposes and cannot be edited.

- `Site Number` (not editable). A number corresponding to the order in which this site was created.

Procedure

1. Using this site's *Site Information* planning form, verify the data on the screen.
2. To enter the remaining fields, select <U>pdate. Enter the information from the *Site Information* planning form in the corresponding data-entry fields. When complete, press <ESC> to save your entries and return to the command line.
3. Press <E>xit to continue.

Entering the Telephone System Configuration

Next the `Edit Telephone System Configuration` screen is displayed. A sample screen appears below.

```
COMMANDS:  Query Next Previous Update Detail Exit
           Query database for record
-----------------------------------------------------------------
                    EDIT TELEPHONE SYSTEM CONFIGURATION
-----------------------------------------------------------------

                         Site: Headquarters
```

Procedure

1. Refer to this site's *Edit Telephone System Configuration* planning form. Press <D>etail to display a screen similar to the one below.

```
COMMANDS:  Query Next Previous Add Update Remove Master Detail Exit
           Find detail record
-------------------------------------------------------------------------
                    EDIT TELEPHONE SYSTEM CONFIGURATION
-------------------------------------------------------------------------

                         Site:  Headquarters

               Facility Group:  ???
                     Facility:  CO
```

NOTE:

CA V2 includes a default value for facility group (????), facility (CO), access code (?????), and trunk line (???????) for each site. These are built-in records used to process calls with undefined trunking data and cannot be removed.

2. To add a facility group, press <A>dd and enter the facility group and other information from this site's planning form in the corresponding data entry field. When complete, press <ESC>.

3. Repeat step 2 until all facility groups for this site have been added.

4. Press <D>etail to display a screen similar to the one below.

```
COMMANDS: Query Next Previous Add Update Remove Master Detail Exit
          Find detail record
-------------------------------------------------------------------
                EDIT TELEPHONE SYSTEM CONFIGURATION
-------------------------------------------------------------------

                        Site:  Headquarters

             Facility Group:  ???
                   Facility:  CO
           Dial Access Code:  ?????
                 Rate Type:  T
                      Rate:     $0.00
                   Carrier:  1
              Carrier Name:  ATT
                  NPA/NXX:  716/271
                   Tandem:  N
        Cost Inbound Calls:  N
```

5. To add a dial access code, press <A>dd and enter the dial access code and other information from this site's planning form in the corresponding data entry field. When complete, press <ESC>.

6. Repeat step 5 until all dial access codes for this site have been added.

7. Press <D>etail to display a screen similar to the one below.

```
COMMANDS: Query Next Previous Add Update Remove Master Detail Exit
          Find detail record
-------------------------------------------------------------------
                EDIT TELEPHONE SYSTEM CONFIGURATION
-------------------------------------------------------------------

                        Site:  Headquarters

             Facility Group:  ???
                   Facility:  CO
           Dial Access Code:  ?????
                 Rate Type:  T
                      Rate:     $0.00
                   Carrier:  1
              Carrier Name:  ATT
                  NPA/NXX:  716/271
                   Tandem:  N
        Cost Inbound Calls:  N

                Trunk Name:  ???????
```

8. To add a trunk line, press <A>dd and enter a trunk-line name from this site's planning form in the corresponding data entry field. When complete, press <ESC>.

9. Repeat step 8 until all trunk lines for this site have been added. The telephone system hierarchy for this site is now complete.

10. Press <E>xit to continue.

Entering the Dialed-Digit Processing Table

The `Edit Dialed Digit Processing` screen, similar to the sample below, appears next.

```
COMMANDS:  Query Next Previous Update Detail Exit
           Find detail record
- - - - - - - - - - - - - - - - - - - - - - - - - - - - - - - - - - - - - - - -
                        EDIT DIALED DIGIT PROCESSING
- - - - - - - - - - - - - - - - - - - - - - - - - - - - - - - - - - - - - - - -

                         Site:  Headquarters
```

Procedure

1. Refer to this site's *Dialed Digit Processing* planning form. Press <D>etail to display a screen similar to the one below.

```
COMMANDS:  Query Next Previous Update Remove Master Exit
           Update the displayed record
- - - - - - - - - - - - - - - - - - - - - - - - - - - - - - - - - - - - - - - -
                        EDIT DIALED DIGIT PROCESSING
- - - - - - - - - - - - - - - - - - - - - - - - - - - - - - - - - - - - - - - -

                           Site:  Headquarters


  Search For:
       Dialed Digits:  0%
           Direction:  O          Trunk Group:

  Cost As:
         Cost Method:  C                Rate:  0     (cost per call)
         Trunk Group:              Call Type:  ZERO+
  Substitute Digits?  N         Dialed Digit:
```

NOTE:

See the default dialed-digit processing table in chapter 3, *Dialed Digit Processing.*

2. If changes are required press <U>pdate, enter new information as necessary, and press <ESC>. Otherwise, press <N>ext to view the next table entry.

3. Repeat step 2 until all default entries are reviewed/modified. To add new entries, press <A>dd and enter the information from the *Dialed Digit Processing* planning form in the corresponding data-entry fields.

4. When complete, press <E>xit to continue.

Entering Call-Collection Information

Finally, the `Edit Call Collection Information` screen, similar to the sample below, appears.

```
COMMANDS:  Query Next Previous Detail Exit
           Find detail record
-------------------------------------------------------------------
                    EDIT CALL COLLECTION CONFIGURATION
-------------------------------------------------------------------

                        Site:  Headquarters
```

CAUTION:

If this site is collecting calls with the Integrated Poller, press <E>xit. Refer to *Entering the Integrated Poller Configuration* in chapter 2 of *Cost Allocator Version 2 Integrated Poller Module* (555-006-509), to setup call allocation using this option.

Procedure

1. Refer to this site's *Call Collection Configuration Part I* planning form. Press <D>etail to display a screen similar to the one below.

```
COMMANDS:  Update Master Detail Exit
           Update the Displayed Record
-------------------------------------------------------------------
                    EDIT CALL COLLECTION CONFIGURATION
-------------------------------------------------------------------

                        Site:  Headquarters

          Collection  Device:  Direct              Site Enabled?  N
        Call Record Format:  s75-fr1v1                Time Zone:  6
        Communication Type:  1               Daylight Savings?  Y
```

2. Press <U>pdate and enter the information from the planning form in the corresponding data-entry fields. When complete, press <ESC>.

NOTE:

All `Site Enabled?` fields should be set to <N>o at this time.

3. Press <D>etail to display a screen similar to the one below.

```
COMMANDS: Update  Master  Exit
          Update  the  Displayed  Record
-------------------------------------------------------------
                    EDIT  CALL  COLLECTION  CONFIGURATION
-------------------------------------------------------------

                         Site:  Headquarters

            Collection  Device:  Direct              Site  Enabled?  N
           Call Record Format:  s75-fr1v1               Time  Zone:  6
          Communication  Type:  1               Daylight  Savings?  Y

              Port Baud Rate:  2400
              Port Data Bits:  7
              Port Stop Bits:  1
                 Port Parity:  E
       Software Flow Control?  N
```

4. Press <U>pdate and enter the protocol information from this site's planning form in the corresponding data-entry fields. When complete, press <ESC>.

5. Press <E>xit to return to the main menu.

The installation and basic configuration of this site is complete. Repeat every step in this section to install the remaining sites in your network.

NOTE:

Generally an AT&T technician partially configures the direct-connect sites so that call-record collection can be verified before turning the system over to you. Consult your system's Software Checklist to determine which sites the technician installed. To view, add, or change, basic configuration information for these sites use the steps below.

1. From the main menu, select `Administration,` then `Site Information.` Press <Q>uery, and type the name of the desired site to display its data. Follow the procedure in *Entering Site Information* earlier in this section if input is required. Repeat this step until site information is complete for all sites.

2. From the main menu, select `Call Rating,` then `Telephone System Config.` Press <Q>uery, and type the name of the desired site to display its data. Follow the procedure in *Entering the Telephone System Configuration* earlier in this section if input is required. Repeat this step until telephone system information is complete for all sites.

3. From the main menu, select `Call Rating,` then `Dialed Digit Processing.` Press <Q>uery, and type the name of the desired site to display its data. Follow the procedure in *Updating the Dialed Digit Processing Table* earlier in this section. Repeat this step until dialed digit processing information is complete for all sites.

4. From the main menu, select `System,` then `Call Record Collection.` Press <Q>uery and type the name of the desired site to display its data. Follow the procedure in *Entering Call Collection Configuration* earlier in this section. Repeat this step until call-record collection information is complete for all sites.

Entering Call Type Adjustments

Use this procedure to adjust the default values provided for all call types defined in the telephone system configuration.

Procedure

1. Locate the *Call Type Adjustments* planning form.

2. From the main menu, select `Call Rating,` then `Call Type Adjustments.` A screen similar to the one below appears.

```
COMMANDS:  Query Next Previous Detail Exit
           Find detail record
-------------------------------------------------------------
                        EDIT CALL TYPE ADJUSTMENTS
-------------------------------------------------------------

                        Site: Headquarters
```

3. To display a site, press <Q>uery and type the name of the desired site. Or press <F1>, select a site, and press <RETURN>, or press <N>ext and/or <P>revious until the desired site name is shown.

4. To view and/or change the call type information for this site, press <D>etail. A screen similar to the that follows is displayed.

```
COMMANDS: Update Next Previous Update Master Exit
          Update the displayed record
-------------------------------------------------------------
                        EDIT CALL TYPE ADJUSTMENTS
-------------------------------------------------------------

                        Site: Headquarters
                   Call Type: IS-OL
                      Markup: 0.0
                   Surcharge: 0.0
              Minimum Charge: 0.0
            Minimum Duration: 0:00:30
          Network Correction: 0:00:15
     Exempt From Federal Tax: N
       Exempt From State Tax: N
      Exempt From County Tax: N
       Exempt From Other Tax: N
```

5. Data for the first call type for this site is shown. Verify that the information is accurate by comparing it to the *Call Type Adjustments* planning form. If changes are required, press <U>pdate, type over the fields as necessary, and press <ESC>. Otherwise, press <N>ext to display the next call type's information.

6. Repeat step 5 until all defaults are checked.

7. Press <M>aster to return to the master screen.

8. Repeat steps 3-7 until all call types for all sites have been verified.

9. Press <E>xit to return to the menu system.

Creating the Organization Tables

This section describes how to create your company's organization table.

Entering Organization Level Headings

CA V2 builds its organization structure on the basis of the hierarchy levels established by the `System Parameters` function. The information provides the framework for the company organization table used by all sites to generate meaningful organization and allocation reports.

As mentioned in Chapter 2, CA V2's hierarchy scheme is flexible. "Company" is always the first and highest level; "cost center" is fixed in the second-to-last position; "owner" is always in the last and bottom position. Between company and cost center, any number of levels can be identified and assigned a maximum character count. Level headings are separated by a semicolon; level headings and one semicolon per level must fit into a 78-character string.

An example of a completed `Organization Level Heading` field appears below. It represents an organization structure that allows 10 characters maximum for the "region" level, 15 for "division," 20 for "department," and 8 for "unit." Including the semicolons, 57 of the maximum 78 characters are used to define 7 total levels of organization hierarchy.

```
    5    10    15    20    25    30    35    40    45    50    55    60
----|----|----|----|----|----|----|----|----|----|----|----|----|
REGION    ;DIVISION       ;DEPARTMENT          ;UNIT    ;
```

Parts of the organization table can be generated at a remote site and transferred to CA V2 via *uucp.* The remote site uses Manager IV to structure the transfer files into an acceptable format and place them into a directory. The CA V2 Application Interface information, also maintained by the `System Parameters` function, defines the system and path for transfer of these files. After the files are received, they are processed and used to update the organization database. This capability accommodates large organizations whose structures, in terms of extension assignments etc., change frequently.

Procedure

1. Locate the *System Parameters* planning form.

2. From the main menu, select `Systems,` then `System Parameters.` A screen similar to the one below appears. **(Fields that do not pertain to the organization hierarchy are shaded.)**

```
COMMANDS: Update Exit
          Update the displayed record
-----------------------------------------------------------------------
                          EDIT SYSTEM PARAMETERS
-----------------------------------------------------------------------
                              Company Name

           ABC Company

                        Organization Level Headings
 REGION    ;DIVISION       ;DEPARTMENT          ;UNIT

                     Applications Interface Information
     System Name:
     System Path:
   Transfer Time:
  Sequence Number:
                                                                  Days
   Privacy Option? Y                      Call Record File Retention:  0
     Store Locals? Y                        Raw SMDR File Rentention:  3
     Min Duration: 0:00:02                    Report File Rentention: 75
```

3. Press <U>pdate and enter your company's name in the corresponding data entry field.

NOTE:

Your company's name may have been entered during the software installation.

Next, enter the `Organization Level Headings` from your planning form, starting with Level A. Type in the level heading and add spaces to total the maximum number of characters for that level. Follow the spaces with a semicolon. Repeat this sequence for each level heading.

Enter the `Application Interface Information` from you planning form in the corresponding data entry fields.

4. When complete, press <ESC> to save your entries and return to the command line.

5. Press <E>xit to return to the menu system.

Entering the Cost Center Table

Use this procedure to create definitions of the organization hierarchy levels — established with the `System Parameters` function — and add cost centers and costing information to each definition.

Procedure

1. Locate the *Cost Centers* planning forms.

2. From the main menu, select `Organization,` then `Cost Centers,` and finally `Edit.`

3. A screen similar to the one below appears.

```
COMMANDS: Query Next Previous Add Update Remove Detail Exit
          Query database for record
-------------------------------------------------------------
                          EDIT COST CENTERS
-------------------------------------------------------------
                   Cost Center Name:UNATTACHED

 REGION    ;DIVISION        ;DEPARTMENT           ;UNIT    ;


                                   Markup
                              Calls: 0.0
                            Service: 0.0
                          Equipment: 0.0

                                 Charges Tax
                                   Exempt?
                            Federal? N
                              State? N
                             County? N
                             Other:  N
```

4. To enter information, press <A>dd and enter a cost center name from a *Cost Center* planning form. Next enter the organization level names listed for this cost center. One or all levels can be left blank. When complete, press <RETURN>.

NOTE:

To enter the organization-level definition, type each name followed by a semicolon. The system will blank-pad the entries when you press <RETURN>.

An example of a completed organization level definition field appears below.

```
    5    10    15    20    25    30    35    40    45    50    55    60
----|----|----|----|----|----|----|----|----|----|----|----|----|----|
REGION     ;DIVISION       ;DEPARTMENT           ;UNIT     ;
South      ;Sales          ;Product  Management  ;A1       ;
```

5. Enter the remaining information from the *Cost Center* planning form in the corresponding data-entry fields. When complete, press <ESC> to save your entries and return to the command line.

6. Press <A>dd to enter another cost center. Proceed with step 7a or 7b as appropriate.

7a. If the organization level names are the same as those defined for the previous cost center, press <F1>, select the definition, and press <RETURN>. Repeat step 5 to complete the screen.

7b. If different, enter the level names from the keyboard as in step 4. Repeat step 5 to complete the screen.

8. Repeat step 6 and 7a/b for each cost center in your organization structure.

9. Press <E>xit when complete to return to the menu system.

Entering the Owners Table

The owners table creates the following associations:

- Owners are associated with site.
- Owners are associated with cost centers.
- Extensions are associated with owners.

For allocation purposes, this allows call records to be attributed to a specific owner at a specific site. For costing purposes, it allows a cost center to be identified for adjustments.

Procedure

1. Locate the *Owner Information* planning forms.

2. From the main menu, select `Organization,` then `Owners,` and finally `Edit.` A screen similar to the one below appears displaying the first site's name.

```
COMMANDS:  Query  Next  Previous  Detail  Exit
           Find  Detail  record
- - - - - - - - - - - - - - - - - - - - - - - - - - - - - - - - - - - - -
                                EDIT  OWNERS
- - - - - - - - - - - - - - - - - - - - - - - - - - - - - - - - - - - - -

                             Site:  Headquarters
```

3. Press <D>etail to display a screen similar to the one below.

```
COMMANDS:  Query  Next  Previous  Add  Update  Remove  Master  Exit
           Query  database  for  record
- - - - - - - - - - - - - - - - - - - - - - - - - - - - - - - - - - - - -
                                EDIT  OWNERS
- - - - - - - - - - - - - - - - - - - - - - - - - - - - - - - - - - - - -
-
                                   Site:  Headquarters
                                  Owner:  UNASSIGNED
                              Extension:
                            Cost Center:  UNATTACHED
                               Location:
                            Room Number:

                                 Set ID:  P
       Privacy/Suppress  Detail  (P/S/N):

          Date  Assigned  to  Cost  Center:
                   Previous  Cost  Center:
 Date  Assigned  to  Previous  Cost  Center:
```

4. Press <A>dd and enter the information for the first owner listed on this site's *Owner Information* planning form. For `Date Assigned to Cost Center,` enter today's date.

5. When complete, press <ESC> to save the entries and return to the command line.

6. Repeat steps 4 and 5 for each owner on this site's *Owner Information* planning form. When complete, press <M>aster.

7. To display another site:
   - Press <Q>uery, then <F1>. Select a site and press <RETURN>.
   - Or press <Q>uery and type the name of an existing site, then press <ESC>.
   - Or press <N>ext and/or <P>revious until the desired site name is shown.

8. Repeat steps 3-7 until every owner listed on all *Owner Information* planning forms are entered.

9. Press <E>xit to return to the menu system.

Entering the Account Code Table

Account codes identify calls allocated to specified entities — for example, a client or a project. Use this procedure to name each account code and associate it with a site.

Procedure

1. Locate the *Account Codes* planning form.

2. From the main menu, select `Organization,` then `Account Codes,` and finally `Edit.` A screen similar to the one below appears.

```
COMMANDS:  Query Next Previous Detail Exit
           Find Detail record
-----------------------------------------------------------------
                            EDIT ACCOUNT CODES
-----------------------------------------------------------------

                            Site:  Headquarters
```

3. To display a specific site:
   - Press <Q>uery, then <F1>. Select a site and press <RETURN>.
   - Or press <Q>uery and type the name of an existing site, then press <ESC>.
   - Or press <N>ext and/or <P>revious until the desired site name is shown.

4. Press <D>etail to view a screen similar to the one below.

```
COMMANDS: Query Next Previous Add Update Remove Master Exit
          Update the displayed record
-----------------------------------------------------------------
                            EDIT ACCOUNT CODES
-----------------------------------------------------------------

                            Site:  Headquarters

                      Account Code 0

                      Account Name UNASSIGNED
```

5. Press <A>dd and enter an account code number and name from this site's *Account Code* planning form. Press <ESC> to save your entries and return to the command line.

6. Repeat step 5 until all account codes for this site are entered.

7. Repeat steps 3 - 6 until all account codes for all sites are entered.

8. Press <E>xit to return to the menu system.

Entering the Authorization Code Table

Authorization codes enable owners to make calls from any extension and "charge" them to their own extension. Use this procedure to assign authorization codes to owners.

Procedure

1. Locate the *Owner Information* planning form.

2. From the main menu, select `Organization,` then `Authorization Code.` A screen similar to the one below appears.

```
COMMANDS: Query Next Previous Detail Exit
          Query database for record
-------------------------------------------------------------
                        EDIT AUTHORIZATION CODE
-------------------------------------------------------------

      Owner:  P. Kelly                      Location:  2nd Floor
       Room:  1001                         Site Name:  Headquarters
  Extension:  1212
```

3. To display a specific owner:
   - Press <Q>uery, then <F1>. Select an owner and press <RETURN>.
   - Or press <Q>uery and type the name of an existing owner, then press <ESC>.
   - Or press <N>ext and/or <P>revious until the desired owner is shown.

4. Press <D>etail to view a second screen, similar to the one below.

```
COMMANDS:  Query Next Previous Add Update Remove Master Exit
           Add a record to the database
-----------------------------------------------------------------
                          EDIT AUTHORIZATION CODE
-----------------------------------------------------------------

                       Owner: P. Kelly

         Room:  1001                Location:  2nd Floor
    Extension:  1212               Site Name:  Headquarters



              Authorization Code:  1234
                     Description:  AT&T
```

5. Press <A>dd and enter this owner's authorization code and description. When complete, press <ESC> to save your entries and return to the command line.

6. Press <M>aster to return to the previous screen.

7. Repeat Steps 3-6 until all authorization codes are entered.

8. When complete, press <E>xit to return to the menu system.

Entering Security Levels

Security in CA V2 is controlled by the assignment of one of four levels to each user. For descriptions of the levels see *Basic Package Features,* in chapter 2. Initially, the system administrator logs in using the ID and password established during installation. To maintain security and allow other users on the system, an ID, password, and security level must be added for every user.

NOTE:

Your CA V2 login ID cannot be the same as your UNIX system login.

Procedure

1. Locate the *Security Levels* planning form.

2. From the main menu, select `Administration,` then `Security Levels` and finally `Edit.` A screen similar to the one that follows appears.

```
COMMANDS: Query Next Previous Add Update Remove Exit
          Query database for record
-------------------------------------------------------------
                        EDIT SECURITY LEVELS
-------------------------------------------------------------

                        User Name: cav2 install user
                         Login ID: ca2
                   Security Level: 4
                        Site Name: %

             Region     ;Division     ;Department           ;Unit ;
             %          ;%            ;%                    ;%    ;
```

3. Press <A>dd and enter the information from the planning form in the corre sponding data-entry field. When complete, press <ESC> to save your entries and return to the command line.

4. Repeat step 3 for each user.

5. Press <E>xit to return to the menu system.

Final Preparations

Your CA V2 system is almost ready to begin collecting call records, processing data, and generating reports. First, however, perform these final preparations.

Deleting All Call Records

Check to make sure that the call-record database is empty before starting call collection.

Procedure

1. From the main menu, select `Call Rating,` then `Call Records,` and finally `Schedule CDR Deletion.` A screen similar to the one that follows appears.

NOTE:

Only the security level 4 system operator can schedule a call record deletion.

```
COMMANDS:  Update Exit
           Update the displayed record
-------------------------------------------------------------
                        SCHEDULE CDR DELETION
-------------------------------------------------------------


                    Deletion Date:  Nov 15, 1991
                        Frequency:  0
                   Retention Days:  0

      Number of Call Records Stored:  15
        Date of Oldsest Call Record:  Nov 1, 1991
          Date of Newest Call Record:  Nov 1, 1991
```

2. If the `Number of Call Records Stored` fields displays a 0, press <E>xit. Otherwise, continue to step 3.

3. Press <U>pdate and enter the following information:

   - `Deletion Date.` In the format *hh:mm mm/dd/yy,* enter a time approximately 10 minutes from the current time and enter today's date.

   - `Frequency.` Press <O>nce, followed by <ESC>, and then <E>xit.

4. From the main menu, select `System,` and then `System Parameters.`

5. Press <U>pdate, move the cursor to `Call Record File Retention` and change the entry to 0. Press <ESC> and <E>xit. The call-record database is deleted at the time you specified.

6. After the deletion occurs, re-enter the `System Parameters` function and enter the number from the *System Parameters* planning form in the `Call Record File Retention` field.

Backing Up the System

At this point CA V2 is completely customized and you should perform a complete backup of the CA V2 processor's hard disks.

Procedure

1. Exit CA V2 from the main menu by selecting `System,` then `Invoke UNIX Shell.`

2. At the prompt, login as **`root.`**

3. At the root prompt, type **`ulimit 4000000,`** then **`face.`**

4. Follow the instructions in *AT&T UNIX System V/386 Release 3.2.3 FACE User's/Administrator's Guide* to backup the system to a tape.

5. When the backup is complete, exit face and the root environment.

6. Log in to CA V2.

Starting Call Costing

Procedure

1. From the main menu, select `Call Rating`, then `Rating and Discount`, and finally `Start Rating`. Rating begins and a screen message indicates `Rating Running`.

2. Press <RETURN> to return to the menu system.

Starting Call Collection

When the CA V2 software is installed, all ports used for call collection are configured. After a successful installation acceptance test, the installer uses the *CDR Port Configuration* function to disable all ports. During initial setup, each site is disabled using the *Call Collection Configuration* function. This is done to avoid collecting call records before the entire system is ready.

The procedure that follows enables all sites to pass call records to the CA V2 processor.

Procedure

1. From the main menu select `System`, then `Call Record Collection`.

2. Press <D>etail, then <U>pdate and enter **Y** in the `Site Enabled?` field. Press <ESC>, and then <M>aster.

3. To select another site:
   - Press <Q>uery, then <F1>. Select an site and press <RETURN>.
   - Or press <N>ext and/or <P>revious until the desired site is shown.

4. Repeat steps 2 and 3 until all sites have been enabled.

5. Press <E>xit to return to the menu system.

CA V2 is now completely operational.

Reporting Procedures

6

This chapter describes CA V2 reports and database tables and the procedures to define and generate them.

- *General Information About Standard CA V2 Reports* — describes the general appearance and meaning of the data contained in most reports. Defining and generating procedures common to most reports is also discussed.

- *Defining and Generating a Selection Report* — describes the report that has the widest array of selection criteria, and allows reporting of call records with specific characteristics.

- *Defining and Generating an Organization Detail Report* — describes the report that supplies information based on the your company's unique organizational hierarchy.

- *Defining and Generating Allocation Reports* — describes the reports that attribute telephone, and in certain cases services and equipment, expenditures to organizational entities.

- *Defining and Generating Account Code Reports* — describes the reports that compile account code information.

- *Defining and Generating a Call Type Report* — describes the report that details call volume and cost data for each site's call types.

- *Defining and Generating a Facilities Group Report* — describes the report that details activity and cost information associated with each facility group and its trunks.

- *Defining and Generating a Frequently Called Numbers Report* — describes the report that lists a site's most frequently dialed numbers.

- *Defining and Generating Tables* — describes the tables that list database information.
- *Scheduling Reports* — describes the procedure that generates periodic reports.
- *Viewing and Printing Reports on File* — describes the procedure for using reports that have been committed to a file.
- *Application Tips* — suggests uses for CA V2 reports.

General Information About Standard CA V2 Reports

CA reports are generated in one of two fixed formats, dictated by the type and scope of the report — an 80-column-wide summary format or a 132-column-wide detailed format.

- Detailed reports list individual call records, sorted by the time of the call and the extension charged, under column headings that clearly label each field in the stored call record.
- Summary reports list subtotals (number, duration, and cost of calls) for items in the category reported (for example, “account codes” in account summary reports or “call types” in a call type report).

Report headings — as in the sample below — include report title, company and site name, time and date of the printout, and reporting period. Column headings are described in the list that follows.

```
  TODAY:  OCT  31  1991  4:12  PM                                                    PAGE      1
COMPANY:  ACME  MANUFACTURING                                              START DATE:  SEP 15 1991
   SITE:  FACTORY 1                                                          END DATE:  OCT 31 1991

                                  Account Code Detail Report # 1

Account Code: 123456
Account Name: Paramount

                                                                    *  Direction/Service
                Duration                                      Carrier      Call              Cost
  Date   Time   hh:mm:ss  Exten  Rate   Center   Dialed  Number Service DS   Type    Trunk     (?)
 -------- ----- ---------- ----- ------------- ------------- -------- -- -------- ------ ----------
09/16/91 09:38  0:10:56    101   ROCHESTER NY   716-385-6440   ATT    OV  OS-OL    1101 $    0.75
```

Figure 6-1. Sample Report Headings

- `Account Code.` Dialed code entered by the caller to identify a client account. (Not to be confused with the code dialed to access a secondary carrier or the authorization code dialed to charge the call to a specific extension).

- `Date.` Date the call was placed.

- `Time.` Time the call began (24-hour format).

- `Duration.` In a detail report, length of the call, as reported in the call record from the switch; in a summary report, the sum of the duration of each call in the group; in a facilities group report, “duration” is subdivided into “Total” (the sum of the durations) and “Average” (total duration divided by total number of calls in the group).

- `Extension.` Station placing, receiving, or charged with a call.

- `Rate Center.` Area called; for example, ROCHESTER NY.

- `Dialed Number.` Telephone number called.

- `Carrier Service.` Carrier that provided the service for this call.

- `DS` (*Direction/Service). Direction, indicated as incoming (I), outgoing (O), or tandem (T). Service, indicated as voice (V), data (D), picture (P), or tape (T).

- `Call Type.` Name that identifies a call’s rating category (see the *Call Type* section in chapter 3 for a list of default call types).

- `Trunk.` Switch identifier for the actual line used by a call. (Not applicable if your switch does not report trunk line numbers.)

- `Cost.` In a detail report, calculated cost of the call, including such user-defined adjustments as taxes, markups, and surcharges; in a summary report, sum of the cost of each call in the group; in a facilities group report, “cost” is subdivided into “total” (the sum of the costs), “per call” (total cost divided by total number of calls in the group), and “per min” (total cost divided by the total duration in minutes).

- `Number.` In a summary report, call record count in each group of calls; in a facilities group report, “number” is subdivided into “total” (call record count), “incom” (the percentage of incoming calls in this record count), and “tandem” (the percentage of tandem calls in this record count)).

In the reporting process, you first define a report and then generate it using the specified output method or schedule its output for a designated time.

Most reports are defined using a screen similar to the one pictured below.

```
COMMANDS: Update Generate Exit
          Update the displayed record
-------------------------------------------------------
                    ACCOUNT CODE DETAIL REPORT
-------------------------------------------------------

     Sites Avail:  10                          Report Period:  M
    Sites Chosen:  4                            Start Period:  Oct 1, 1991
   Output Method:  F
  Output Modifier:
     Output File:  acctcd.01

                   Site Selections
       Site Name   Include?  Site Name   Include?
    Headquarters      I                     I
    Site A            I                     I
    Site B            I                     I
    Site C            I                     I
                      I                     I      Print Trunk? N
```

Most report screens include the data-entry fields describe below. Some fields only display information.

To define a report, press <U>pdate and enter information.

- `Sites Available` (not editable). Number of sites in your CA V2 network.
- `Sites Chosen` (not editable). Number of sites <I>ncluded or <E>xcluded in `Site Selection` below.
- `Output Method.` Output is sent to a <F>ile, default <P>rinter, or device <1> to <9>.
  - <F>ile. This method stores a defined report in a file. The file is accessed in `View/Print Reports on File` to view the report on your terminal screen or send it to a printer.
  - Default <P>rinter. This method directs the defined report to a default print spooler. CA V2 automatically chooses the print spooler for 132-column compressed mode if required by the size of the report; otherwise it directs the report to the standard 80-column print spooler.
  - Devices <1> through <9>. This method directs the defined report to one of the 9 devices configured in the `Device Configuration` function. The device can be defined in a number of ways — for example, laser printer, tape, uucp output, etc.

- `Output Modifier.` Name of the modifier, if any, to invoke prior to output. The modifier performs special functions, such as reformatting a report before it is sent to a file or other device.

NOTE:

We have supplied a program `(wide)` to place your printer in condensed mode. Use it as a modifier or in an output pathname.

- `Output File.` If you specify <F>ile as the output method, you must enter a file name in this field. CA V2 creates a file if the file name is unique; if the file name exists, screen prompts ask for another name. The file name is listed in a help menu in the `View/Print Reports on File` function.

- `Report Period.` Length of time to be covered by this report: <A>ll, <Y>ear, <Q>uarter, <M>onth, <B>iweek, <W>eek, <D>ay, <U>ser Defined Reporting Period, or a number of days up to 99.

- `Start Period.` The date to begin the reporting period in *mm/dd/yy* format (not used with <A>ll).

- `Site Selection.` <I>nclude or <E>xclude up to 10 sites. You can use the following wildcard characters:

  - ? stands for any single character in that position
  - % stands for any number of characters or no characters

  For example, S% selects all sites starting with “S”. To limit global selections, enter exception site names, indicating them to be <E>xcluded. To select sites starting with “S” except for “SITE 4,” for example, enter:

  Site Name: **S%** <I>nclude/<E>xclude: I
  Site Name: **SITE 4** <I>nclude/<E>xclude: E

  Or, to select all sites that do not end with “4” enter:

  Site Name: %4 <I>nclude/<E>xclude: E

  Use % in one field to report on all sites.

- `Print Trunk?` <Y>es to print trunk names on the report; otherwise <N>o.

Once the report is defined, press <ESC> and <G>enerate the report.

Scheduling a report, discussed later in this chapter, is done in much the same way except that the report is generated at a specified time (at least 5 minutes from the current time).

Defining and Generating a Selection Report

This function is used to define and/or generate a selection report in either a detail or summary format. This report type is extremely versatile, with a wide range of selection criteria that allow call records with specific characteristics to be identified. Use it primarily to pinpoint problem areas revealed by other reports.

The *Selection Detail Report* lists the details of each call record selected (unless the global privacy is masking the last four digits of dialed numbers). This report does not include taxes or markups in its costs. Totals are reported for the duration and cost of all calls selected.

The *Selection Summary Report* lists a total duration and total cost of all call records selected. As in the detail report, taxes and markups are not included in its costs.

NOTE:

With the Enhanced Rating II module selection reports can reflect ISDN information. Complete detailed documentation is provided in *Enhanced Rating II Module,* (555-006-511).

You can define up to 50 each of the detail and summary selection reports for generating or scheduling. Sample CA V2 reports are in *Appendix C.*

Procedure

1. From the main menu select `Reports,` then `Selection/Exception.` A screen similar to the one below appears.

```
  COMMANDS: Next Previous Update Generate Exit
            Update the displayed record
-------------------------------------------------------------
                          SELECTION  REPORT
-------------------------------------------------------------
  Report  Number: 1                                  Report  Type:D
       Subtitle: Cost  Center  Special
      Auth  Code:                          Site:  Headquarters
  REGION     ;DIVISION        ;DEPARTMENT            ;UNIT    ;
  South      ;Sales           ;Product  Management   ;A1      ;

       Facility:                                Dialed  Number:
   Account Code:                                      ANI/SID:
    Cost  Center: Cost  Center  I                  Carrier Type:          BCC:
      Call Type:                  IXC:                 ISN/NSF:        MA-UUI:
   Call Inc/Exc:       Call  Direction:I                  Summarize  Locals?
    Call Source:     Calls   Estimated:     Summarize  Zero  Cost  Non-Locals?

                     From              To
Extension  Range:    1001              1020
Time/Date  Range:    12:00  09/01/91  12:00  10/31/91
Duration Range:                                   OR
Cost Range:
```

2. To define a selection report, press <U>pdate and enter information in the following data-entry fields.

- `Report Number` (not editable). The definition number of the displayed report.

- `Subtitle.` The user-defined name for this report, that appears in report headers (up to 50 characters).

- `Authorization Code.` The number of a specific authorization code or <None>. A blank means all.

- `Organization Level.` Part or all of a group of level names (up to 78 characters) you defined for the company's organization hierarchy. A blank means all. If a level is specified, information for all associated levels is reported. Wildcard characters can be used.

- `Facility.` A valid facility name, as defined in the company's telephone system configuration table. A blank means all. Wildcard characters can be used.

- `Account Code.` An account code number of 1-16 digits, <Unassigned> (for calls without account codes), or <None>. A blank means all. Wildcard characters can be used.

- `Cost Center.` A valid name from the company's organization table. A blank means all. Wildcard characters can be used.

- `Call Type.` A valid call type for your system. A blank means all. Wildcard characters can be used.

- `Call Incl./Excl.` <I>nclude records with specified call type only, or <E>xclude the specified call type and report on all others.

- `Call Source.` <V>oice, <D>ata, <P>icture, or <T>ape. A blank means all.

- `Call Direction.` <I>n, <O>ut, <T>andem, or <A>ll.

- `Calls Estimated.` Ex<C>hange, <T>runk, or <B>oth. A blank means no.

  Entries in this field limit reports to those calls with estimated costs. If the cost has been estimated because the exchange is not recognized — for example, new exchanges are added that are not in your rate tables — the report has a question mark before the cost on the detail line. If a trunk line is used that is not part of the telephone system configuration, an estimated cost is reported. Estimated costs have a question mark before the trunk line number and the cost on the detail line.

- `Extension Range.` Valid extensions from the company's organization table, 0 - 99999. A blank means all.

NOTE:

Unless an entry is made in the `Site` field, the extension range applies company wide.

- `Time/Date Range.` The time to begin reporting calls and the time to end reporting calls, in *hh:mm mm/dd/yy* format. A blank means all.

- `Duration Range.` The minimum to maximum duration of calls to report, in *hh:mm:ss* format.

- `AND/OR.` Report on duration <AND> cost, or duration <OR> cost.

- `Cost Range.` The minimum to maximum cost of calls to report, $0.00 to `$99999.99`.

- `Report Type.` <D>etail or <S>ummary.

- `Site.` A valid site from the company's organization table. A blank means all. Wildcard characters can be used.

- `Dialed Digits.` The pattern of numbers dialed, 1 to 14 characters. A blank means all. Wildcard characters can be used.

- `ANI/SID.` The inbound pattern of numbers dialed, from 1 to 14 characters, or <None>. A blank means all. Wildcard characters can be used.

- `Carrier Type.` The number <1> to <4> (<1> to <16> if the Enhanced Rating II module is installed) associated with a carrier on this system. <0> indicates a flat rate. A blank means all.

- `IXC.` A 3-digit ISDN carrier identifier. A blank means all. (ICX information is meaningful only with the Enhanced Rating II module —if you do not have the module leave the field blank.)

- `NSF/INS.` A 3-digit code identifying the ISDN carrier service. A blank means all. (NSF/INS information is meaningful only with the Enhanced Rating II module —if you do not have the module leave the field blank.)

- `BCC.` A 1-digit entry (<0> to <9>) indicating the bearer capability code to report. (BCC information is meaningful only with the Enhanced Rating II module —if you do not have the module leave the field blank.)

- `MA-UUI.` A 1-digit entry to specify the message-associated user-to-user information code.

- `Summarize Locals?` <Y>es to summarize the total number, duration, and cost of all local calls as a single report entry, <N>o otherwise.

- `Summarize Zero Cost Non-Locals?` <Y>es to summarize the total number and duration of all nonlocal calls costed at $0.00 as a single report entry, <N>o otherwise.

3. Press <RETURN> to move from one data-entry field to another. Enter data from the keyboard or, when available, press <F1> to use a help menu.

4. Press <ESC> to complete the definition. You can define another report by pressing <N>ext to advance to a blank screen and repeat steps 2 - 4.

5. To generate a defined selection report, use <N>ext or <P>revious to display the desired report number. Press <G>enerate and a screen similar to the one below appears.

6. Press <U>pdate to access the data-entry fields listed below.

   - `Output Method.` Send output to a <F>ile, default <P>rinter, or device <1>-<9>.

   - `Output Modifier.` Name of the modifier, if any, to invoke prior to output. The modifier performs special functions, such as reformatting a report before it is sent to a file or other device.

     NOTE:

     We have supplied a program `(wide)` to place your printer in condensed mode. Use it as a modifier or in an output pathname.

   - `Output File.` If you specify <F>ile as the output method, you must enter a file name in this field. CA V2 creates a file if the file name is unique; if the file name exists, screen prompts ask for another name. The file name is listed in a help menu in the `View/Print Reports on File` function.

   - `Print Trunk?` <Y>es to print trunk names on the report; otherwise <N>o.

```
COMMANDS:  Update  Generate  Exit
           Update the displayed record
- - - - - - - - - - - - - - - - - - - - - - - - - - - - - - - - - - - - - - - - - - - -
                                SELECTION  REPORT
- - - - - - - - - - - - - - - - - - - - - - - - - - - - - - - - - - - - - - - - - - - -

    Output  Method:      F
  Output  Modifier:
      Output  File:      acctcd.spcl



                                                        Print  Trunk?  N
```

7. Press <ESC> when complete. Press <G>enerate to begin processing the report. You automatically return to the menu system.

Defining and Generating an Organization Detail Report

You can use an organization detail report to allocate telephone calls and their costs to owners and extensions and, in turn, to the appropriate cost center. The selection criteria and information reported are similar to those for an allocation detail report. However, several major differences exist:

- This report includes taxes but no cost center or other adjustments.
- When this report is generated, cost center year-to-date information is not calculated or updated in the database, and therefore is not reported.
- You define up to 50 different organization detail reports. Then, you can generate them immediately or schedule them for a later time.

Call records with authorization codes are listed and totaled separately following the owner's extension. Totals for owners, grand totals for cost centers and totals for each level of organization hierarchy are also included. Sample CA V2 reports are in *Appendix C.*

Procedure

1. From the main menu, select `Reports,` then `Organization.` A screen similar to the one below appears.

```
 COMMANDS:  Next Previous Update Generate Exit
            Update the displayed record
- - - - - - - - - - - - - - - - - - - - - - - - - - - - - - - - - - - - - - - - - - - - - - - -
                                ORGANIZATION  REPORT
- - - - - - - - - - - - - - - - - - - - - - - - - - - - - - - - - - - - - - - - - - - - - - -

      Report Number:  1
           Subtitle:  Cost Center Special

   REGION    ;DIVISION        ;DEPARTMENT            ;UNIT    ;
   South     ;Sales           ;Product Management    ;A1      ;

      Cost Center:                                   Page Break?   Y
                                          Summarize Call Details:   N
                                                 Summarize Locals:   N
        Call Type:                Summarize Zero Cost Non-Locals?   Y

                      From              To
 Time/Date Range:  12:00 09/01-91   12:00 10/31/91
  Duration Range:                                   OR
      Cost Range:
```

2. To define an organization detail report, press <U>pdate to access the data-entry fields described below:

   - `Report Number` (not editable). The definition number of the report being viewed.

- `Subtitle.` The user-defined name for this report, which appears in report headers (up to 50 characters).

- `Organization Level.` Part or all of a group of level names (up to 78 characters) you defined for the company's organization hierarchy. A blank means all. If a level is specified, information for all associated levels is reported. Wildcard characters can be used.

- `Cost Center.` The name of a cost center attached to the selected organization level. A blank means all.

- `Call Type.` The name of a valid call type for your system. A blank means all.

- `Page Break?` <Y>es to allow a page break after each owner, <N>o otherwise. Pages break automatically after each cost center.

- `Summarize Call Details.` <Y>es to provide summaries with subtotal by owners, <N>o otherwise.

- `Summarize Locals?` <Y>es to summarize the total number, duration, and cost of all local calls as a single report entry, <N>o otherwise.

- `Summarize Zero Cost Non-Locals?` <Y>es to summarize the total number and duration of all nonlocal calls costed at $0.00 as a single report entry, <N>o otherwise.

- `Time/Date Range.` The time and date to begin reporting calls and the time and date to end reporting calls, in *hh:mm mm/dd/yy* format.

- `Duration Range.` The minimum and maximum duration of calls to report, in *hh:mm:ss* format. A blank indicates no duration range limits.

- `AND/OR.` Report on duration AND cost; or duration OR cost.

- `Cost Range.` The minimum and maximum cost of calls to report. A blank indicates no cost-range limits.

NOTE:

The `Other Excluded Calls` listing on the report is derived from call records suppressed by the time, duration, and/or cost ranges.

3. Press <RETURN> to move from one data-entry field to another. Enter data from the keyboard or, when available, press <F1> to use a help menu.

4. Press <ESC> to complete the definition. You can define another report by pressing <N>ext to advance to a blank screen and repeating steps 2 - 4.

5. To generate a defined organization detail report, use <N>ext or <P>revious to display the desired report number. Press <G>enerate and a screen similar to the one that follows appears.

```
COMMANDS: Update Generate Exit
          Update the displayed record
-----------------------------------------------------------
                    ORGANIZATION DETAIL REPORT
-----------------------------------------------------------

   Output Method:      F
 Output Modifier:
     Output File:      acctcd.spcl

                                          Print Trunk? N
```

6. Press <U>pdate to access the data-entry fields listed below.

   - `Output Method.` Send output to a <F>ile, default <P>rinter, or device <1> to <9>.

   - `Output Modifier.` Name of the modifier, if any, to invoke prior to output. The modifier performs special functions, such as reformatting a report before it is sent to a file or other device.

     NOTE:
     We have supplied a program `(wide)` to place your printer in condensed mode. Use it as a modifier or in an output pathname.

   - `Output File.` If you specify <F>ile as the output method, you must enter a file name in this field. CA V2 creates a file if the file name is unique; if the file name exists, screen prompts ask for another name. The file name is listed in a help menu in the `View/Print Reports on File` function.

   - `Print Trunk?` <Y>es to print trunk names on the report; otherwise <N>o.

7. Press <ESC> when complete. Press <G>enerate to begin processing the report. You automatically return to the menu system.

Defining and Generating Allocation Reports

An allocation report is generated in either a detailed or summary format. The reports provide organizational entities with information on their telephone expenditures. A sample of both reports is in *Appendix C.*

Allocation Detail Report

This report allocates telephone expenditures to owners and their extensions and provides information on one or all cost centers in the selected organization level. Totals for owners, cost centers, and organization levels are shown. Header information shows the associated site's complete organization hierarchy.

The allocation detail report differs from other reports in the following ways:

- The reporting period is limited to the user-defined list of reporting dates.

NOTE:

Reports generated with the report user-defined period (U) contain information from the last completed user-defined reporting period. Reports scheduled using the user-defined reporting frequency must have a run date beyond the end of the current period.

- This report includes taxes and cost-center adjustments.
- Cost center year-to-date summaries are calculated, and updated in the database when this report is run.

NOTE:

If the Enhanced Chargeback Module is installed, the report provides information on owner's equipment and services charges. Owner total charges for equipment and services, including recurring and nonrecurring charges, are calculated over the reporting period and applied to the appropriate cost center.

Procedure

1. From the main menu, select `Reports,` then `Allocation,` and finally `Detail.` A screen similar to the one below appears.

```
COMMANDS: Update Generate Exit
          Update the displayed record
-------------------------------------------------------------
                    ALLOCATION DETAIL REPORT
-------------------------------------------------------------

        Subtitle: Allocation Detail No. 1
       REGION    ;DIVISION        ;DEPARTMENT            ;UNIT    ;
       %

      Cost Center:                                   Page Break?  Y
                                          Summarize Call Details:  N
                                                 Summarize Locals:  N
        Call Type:                 Summarize Zero Cost Non_Locals?  Y
                             Summarize Services/Equipment Details?  N

                     From             To
       Time Range    08:00          12:00
   Duration Range                                  OR
       Cost Range
```

2. To define an allocation detail report, press U>pdate to access the data-entry fields described below.

   - `Subtitle.` The user-defined name for this report, which appears in report headers (up to 50 characters).

   - `Organization Level.` Part of all of a group of level names (up to 78 characters) you defined for the company's organization hierarchy. A blank means all. If a level is specified, information for all associated levels is reported. Wildcard characters can be used.

   - `Cost Center.` The name of a cost center attached to the selected organization level. A blank means all.

   - `Call Type.` The name of a valid call type for your system. A blank means all.

   - `Page Break?` <Y>es to allow a page break after each owner, <N>o otherwise. Pages break automatically after each cost center.

   - `Summarize Call Details.` <Y>es to provide summaries with subtotal by owners, <N>o otherwise .

   - `Summarize Locals?` <Y>es to summarize the total number, duration, and cost of all local calls as a single report entry, <N>o otherwise.

   - `Summarize Zero Cost Non-Locals?` <Y>es to summarize the total number and duration of all nonlocal calls costed at $0.00 as a single report entry, <N>o otherwise.

   - `Summarize Service/Equipment Details?` If your system includes the Enhanced Charge-Back Module, <Y>es to summarize owner equipment and services charges, <No> otherwise. Leave blank if you do not have the Enhanced Charge-Back Module.

   - `Time Range.` The starting and ending times of calls to report, in *hh:mm* format. A blank indicates no time-range limits.

   - `Duration Range.` The minimum and maximum duration of calls to report, in *hh:mm:ss* format. A blank indicates no duration range limits.

   - `AND/OR.` Report on duration AND cost; or duration OR cost.

   - `Cost Range.` The minimum and maximum cost of calls to report. A blank indicates no cost-range limits.

3. Press <RETURN> to move from one data-entry field to another. Enter data from the keyboard or, when available, press <F1> to use a help menu.

4. Press <ESC> to complete the definition. You may press <E>xit to return to the menu system or continue with step 5 to generate the report now.

5. Press <G>enerate. A screen similar to the one that follows appears.

```
COMMANDS:  Update  Generate  Exit
           Update  the  displayed  record
-------------------------------------------------------------
                        ALLOCATION  DETAIL  REPORT
-------------------------------------------------------------

                                          Report  Period:   U
                                            Start  Period:   Oct  01  91
    Output  Method:   F
   Output  Modifier:
       Output  File:   allol.dtl



                                                   Print  Trunk?  N
```

6. Press <U>pdate to access the data-entry fields listed below.

   - `Output Method.` Send output to a <F>ile, default <P>rinter, or device <1 - 9>.

   - `Output Modifier.` Name of the modifier, if any, to invoke prior to output. The modifier performs special functions, such as reformatting a report before it is sent to a file or other device.

     NOTE:

     We have supplied a program `(wide)` to place your printer in condensed mode. Use it as a modifier or in an output pathname.

   - `Output File.` If you specify <F>ile as the output method, you must enter a file name in this field. CA V2 creates a file if the file name is unique; if the file name exists, screen prompts ask for another name. The file name is listed in a help menu in the `View/Print Reports on File` function.

   - `Report Period` (not editable). The <U>ser-defined reporting period is the only acceptable entry for the allocation detail report.

   - `Start Period` (not editable). The date that represents the start of the previous completed reporting period as defined by the user-defined list of dates.

   - `Print Trunk?` <Y>es to print trunk names on the report, <N>o otherwise.

7. Press <ESC> when complete. Press <G>enerate to begin processing the report. You automatically return to the menu system.

Allocation Summary Report

An allocation summary report provides a summary of all call charges for the specified organization levels. The report starts at the highest specified level, and lists all names for each level down to cost center, reporting the total number of calls, duration, and cost. This report does include taxes and cost center markups.

NOTE:

If the Enhanced Chargeback Module is installed, cost information is broken into telephone, equipment, and services followed by a total. Equipment and services costs show both recurring and non-recurring charges. For every level, current totals and year-to-date totals are calculated.

Procedure

1. From the main menu, select `Reports,` then `Allocation,` and finally `Summary.` A screen, similar to the one below appears.

```
COMMANDS:  Update Generate Exit
           Update the displayed record
-----------------------------------------------------------------
                         ALLOCATION SUMMARY REPORT
-----------------------------------------------------------------

          Subtitle: Allocation Detail No. 1
   REGION    ;DIVISION       ;DEPARTMENT           ;UNIT    ;
   South     ;Sales          ;Product Management   ;A1      ;
```

2. To define an allocation summary report, press <U>pdate to access the data-entry fields described below.

   - `Subtitle.` The user-defined name for this report, which appears in report headers (up to 50 characters).

   - `Organization Level.` Part or all of a group of level names (up to 78 characters) you defined for the company's organization hierarchy. A blank means all. If a level is specified, information for all associated levels is reported. Wildcard characters can be used.

3. Press <RETURN> to move from one data-entry field to another. Enter data from the keyboard, or when available, press <F1> to use a help menu.

4. Press <ESC> to complete the definition.

To generate an allocation summary report, begin with step 6 of the allocation detail report procedure in the preceding section.

CAUTION:

Remember that, as an allocation detail report is generated, it updates the cost center year-to-date totals in the database. If you are running both reports, the detail report must run first so that the summary report is generated from the updated data.

In addition, it is necessary to run an allocation detail report for all cost centers at least once during each user-defined reporting period. By doing so, each cost center's database contains information from the same time period.

Defining and Generating Account Code Reports

Account code reports are also available in both detail or summary formats. They provide costing and other information on calls prefixed with these codes. A sample of these reports is in *Appendix C.*

Account Code Detail Report

This report lists, in numerical order, all account codes and their associated call records, for the specified sites. If an account code name has been assigned, it appears on the report below the code. This report does not include taxes but account code adjustments are applied to the cost of calls.

Following the records charged to each account code, totals are provided for duration, number of calls, and cost. A grand total for these headings is calculated for each site. The report prints one account per page, making it suitable as a bill for clients. A sample of these reports is in *Appendix C.*

NOTE:

This report does not include information related to "unassigned" call records (without account codes). If you need information on these records, run a selection report for only those records.

Procedure

1. From the main menu, select `Reports,` then `Account Codes,` and finally `Detail.`

2. To define the account code detail report and generate it for immediate output, see the *General Information About Standard CA V2 Reports* section earlier in this chapter. To run this report at a another time, see *Scheduling Reports* later in this chapter.

Account Code Summary Report

The account code summary report lists, in alphanumeric order, each account code associated with the specified sites. A summary line for each account codes shows its name, number of associated calls, their duration, and cost. A site total is also included. Like its detailed counterpart, this report does not include taxes but account code adjustments are applied to the cost of calls.

Procedure

1. From the main menu, select `Reports,` then `Account Codes,` and finally `Summary.`

2. To define the account code summary report and generate it for immediate output, see the *General Information About Standard CA V2 Reports* section earlier in this chapter. To run this report at a another time, see *Scheduling Reports* later in this chapter.

Defining and Generating a Call Type Report

A call type report shows the type and volume of calls a site makes. Total number of calls, duration and cost, and average cost per minute are calculated for the call types of selected sites. This report does not include taxes or adjustments in its costs. A sample report is in *Appendix C.*

Procedure

1. From the main menu, select `Reports,` then `Call Types.`

2. To define the call type report and generate it for immediate output, see the *General Information About Standard CA V2 Reports* section earlier in this chapter. To run this report at a another time, see *Scheduling Reports* later in this chapter.

Defining and Generating a Facilities Group Report

The facilities group report identifies trunk line usage and can help evaluate the use of each facility group in a site. The report is organized by facility group with the associated trunk-line activity detailed in terms of number of calls, duration, and cost. A summary line totals the trunk line data for each facility group. This report does not include taxes or adjustments in its costs. A sample report is in *Appendix C.*

Procedure

1. From the main menu, select `Reports,` then `Facilities Group.`

2. To define the facilities group report and generate it for immediate output, see the *General Information About Standard CA V2 Reports* section earlier in this chapter. To run this report at another time, see *Scheduling Reports* later in this chapter.

Defining and Generating a Frequently Called Numbers Report

To create a frequently called numbers report, CA V2 sorts the dialed numbers in each site's call records, determines the number of times each was called, and identifies the 250 most frequently called numbers. The same number sequence must be dialed at least twice to be reported. Each site is listed separately, showing the number of times a call was made, the dialed number, rate center, duration, and cost. This report does not include taxes or adjustments in its costs. A sample report is in *Appendix C.*

Procedure

1. From the main menu, select `Reports,` then `Frequently Called Numbers.`

2. To define the frequently called numbers report and generate it for immediate output, see the *General Information About Standard CA V2 Reports* section earlier in this chapter. To run this report at a another time, see *Scheduling Reports* later in this chapter.

Generating Tables

CA V2 can list the content of many of its databases. These “tables” are very useful for ascertaining the current system or site configuration, and it is recommended that they be printed after database updates. Sample database tables are in *Appendix C.*

Procedure

1. From the main menu, select `Reports,` then `Tables,` then one of the following system tables:

   - `Cost Centers`
   - `Alarm Information`
   - `Holiday`
   - `Scheduled Reports`
   - `Site Information`
   - `System Information`

   Or select one of the following site-specific tables:

   - `Owners by Name`
   - `Owners by Extension`
   - `Unassigned Extensions`
   - `Account Codes`
   - `Telephone System Configuration`
   - `Dialed Digit Processing`
   - `Call Type Adjustments`
   - `Carrier Information`

   A screen similar to one of the following appears.

```
COMMANDS: Update Generate Exit
          Update the displayed record
-------------------------------------------------------------
                          LIST COST CENTERS
-------------------------------------------------------------

       Output Method: F Send to File
     Output Modifier:
         Output File: costctr.tbl
```

```
COMMANDS: Update Generate Exit
          Update the displayed record
-------------------------------------------------------------------------
                              LIST OWNERS BY NAME
-------------------------------------------------------------------------

     Site Avail:  10
    Sites Chosen: 4
   Output Method: F Send to File
 Output Modifier:
     Output File: ownersnme.tbl

            Site Selections
      Site Name  Include  Site Name  Include
   Headquarters     I                  I
   Site A           I                  I
   Site B           I                  I
   Site C           I                  I
                    I                  I
```

2. To define a database table and generate it for immediate output, see *General Information About Standard CA V2 Reports* earlier in this chapter. To run a table at a another time, see the next section *Scheduling Reports.*

Scheduling Reports

A report that is not required immediately or that is required on a periodic basis can be generated using the `Schedule Reports` function. Each eligible user can schedule up to 50 reports or tables. CA V2 assigns a number to each report in the order in which it is scheduled and maintains the schedule for output, viewing, or updating.

Procedure

1. From the main menu, select `Reports,` then `Schedule Reports.` A screen similar to one of the following appears.

```
COMMANDS: Next  Previous  Update  Exit
          Find  the  next  record
-------------------------------------------------------------
                          SCHEDULE   REPORTS
- - - - - - - - - - - - - - - - - - - - - - - - - - - - - - - - - - - - - - - -


      Report  Code  OD   Organization   Detail   Report
   Report  Number  1

        Frequency  O                      Next  Run  Date  12:00:00  12/5/91
   Output  Method  F  Send  to  File
 Output  Modifier
     Output  File  org.1191
```

```
COMMANDS:  Next Previous Update Exit
           Update  the  displayed  record
-------------------------------------------------------------------
                              SCHEDULE   REPORTS
-------------------------------------------------------------------

      Report  Code  ACD    Account  Code  Detail  Report
   Report  Number  4
   Report  Period     Period  Start  Oct  1,  1991     Increment  Period  Y
      Frequency  M                          Next  Run  Date  12:00  Nov  5,  1991
   Output  Method  F  Send  to  File
 Output  Modifier
     Output  File  acctcd.1191
 Sites  Available  10
    Sites  Chosen  4

           Site  Name     Include    Site  Name   Include
           Headquarters     I                       I
           Site  A          I                       I
           Site  B          I                       I
           Site  C          I                       I
                            I                       I
```

2. To schedule a report, press <U>pdate to access some or all of the data-entry fields described below.

NOTE:

This function has two different screen formats (each of which has two versions). The display depends on the type of report being scheduled. For example, when you schedule an *Organization Detail Report,* the display does not include `Report Period, Period Start` and `Increment Period` — this information is contained in the report's definition.

- `Report Code.` The internally-defined short name for a CA V2 report or table (7 characters maximum) to display.

- `Report Number.` The identifier, number 1 to 50, assigned to this report (the default is 1).

NOTE:

Remember that, for almost all reports and tables, only one definition exists at a time. The current report, defined by the screen data entries, is the only version of the report that can be scheduled.

The exceptions are the organization detail report, the selection report, and reports generated by the Custom Report Module. Up to 50 different definitions of each of these types of reports can be scheduled.

- `Report Period.` The length of time to be covered by this report: <A>ll, <Y>ear, <Q>uarter, <M>onth, <B>iweek, <W>eek, <D>ay, or a number of days up to 99. (Not displayed for all report types.)

- `Period Start.` Start date for the reporting period in *mm/dd/yy* format (not used with <A>ll). (Not displayed for all report types.)

- `Increment Period.` <Y>es or <N>o to automatically update the period start date, according to the specified frequency, after a scheduled report is run. (Not displayed for all report types.)

- `Frequency.` The interval that describes how often to run this report: <Y>early, <Q>uarterly, <M>onthly, <B>iweekly, <W>eekly, <D>aily, <H>ourly, <O>nce, <N>ever, or a specific number of days up to 99. After a report is run, it is automatically rescheduled according to its frequency. <O>nce is updated to <N>ever after the report is run.

- `Next Run Date.` The date the report runs the first time. After the initial run, this date updates according to its frequency. Enter the date in *hh:mm mm/dd/yy* format.

NOTE:

A report must be scheduled at least 5 minutes before it is to be generated.

- `Output Method.` Output to be sent to a <F>ile, default <P>rinter, or device <1 to 9>.

- `Output Modifier.` Name of the modifier, if any, to invoke prior to output. The modifier performs special functions, such as reformatting a report before it is sent to a file or other device.

  NOTE:

  We have supplied a program `(wide)` to place your printer in condensed mode. Use it as a modifier or in an output pathname.

- `Output File.` If you specify <F>ile as the output method, you must enter a file name in this field. CA V2 creates a file if the file name is unique; if the file name exists, screen prompts ask for another name. The file name is listed in a help menu in the `View/Print Reports on File` function.

- `Site Selection.` <I>nclude or <E>xclude up to 10 sites. Wildcard characters can be used.

  - ? stands for any single character in that position
  - % stands for any number of characters or no characters

  For example, S% selects all sites starting with “S”. To limit global selections, enter exception site names, indicating them to be <E>xcluded. To select sites starting with “S” except for “SITE 4,” for example, enter:

  Site Name: **S%** <I>nclude/<E>xclude: I
  Site Name: **SITE 4** <I>nclude/<E>xclude: E

  Or, to select all sites that do not end with “4” enter:

  Site Name: %4 <I>nclude/<E>xclude: E

3. Press <RETURN> to move from one data-entry field to another. Enter data from the keyboard or, when available, press <F1> to use a help menu.

4. Press <ESC> to complete the definition. You can schedule another report or table by pressing <N>ext to advance to a blank screen and repeating steps 2 - 4.

5. When complete, press <E>xit to return to the menu system.

Viewing and Printing Reports on File

After a report or table is generated and resides in a file, this function is used to view the file on a terminal, or send it to a printer.

NOTE:

If you output a report to a file and subsequently use this function to print the file, include in your print spooler pathname if condensed mode is necessary (for example, `wide epson|lp)`.

Procedure

1. From the main menu, select `Reports,` then `View/Print Reports on File.` A screen similar to the following one appears.

```
COMMANDS: Update View Remove Print Exit
          Update the displayed record
-----------------------------------------------------------------------
                          VIEW/PRINT  REPORT
-----------------------------------------------------------------------

                Report  File:  acctcd.spcl
```

2. To view or print a report on file, press <U>pdate to access the data-entry field described below.

   - `Report File.` The name of a file in the report file directory.

3. Press <F1> to use a help menu. Press <ESC> and continue with 4a, 4b, or 4c.

4a. Press <V>iew to display the report file on your screen and follow the instructions to return to the previous screen.

4b. Press <R>emove to delete the report file and follow the instructions to return to the previous screen.

4c. Press <P>rint to send the report file to a printer and follow the instructions to return to the previous screen.

5. Press <E>xit to return to the menu system.

Application Tips

CA V2 reports provide important information about telephone expenditures, usage, and other areas that help in planning for services, billing, and internal accounting. The following pages review some of the report benefits.

Spot Telephone Abuse

Excessive personal calls, calls placed by unauthorized personnel (visitors, delivery personnel, janitorial staff), and calls to dial-up recordings may be forms of abuse.

Check specific telephone numbers in a selection report, such as:

- Your competitors' (is someone giving out inside information?)
- Local media (is someone talking to the press?)
- Time & weather, dial-a-joke, etc. A federal government office in Washington, D.C. recently reported a that over $25,000 in calls were placed in a month to two dial-up recordings. In many locations these are identified by the 976 exchange.

Check calls dialed after office hours. The facility usage report (available with the Enhanced Reporting Module) can help in determining if after hours calls are valid. Use the selection report to find the details.

Check incoming WATS in a call-type report. Are people giving out 800 numbers to friends? Use the selection report to look for a pattern — for example, every Friday noon, extension 315 receives a WATS call and talks for an hour.

Allocate Costs

Departments, cost centers, and individual company personnel are often accountable for expenses incurred and need to remain within their respective budgets. Departments operating on a profit-center basis are accountable for expenses.

The various organization detail and allocation reports provide local managers enough information to keep track of the details of their groups' telephone costs. The allocation summary reports provide top management a comparative view of the various organization levels' expenses across all sites. Services and equipment charge information are available in the allocation detail and summary reports if the Enhanced Charge-Back Module is installed. This data is useful in determining how much of the total costs of a telephone system are due to billings for items other than telephone calls.

To allocate expenses by some other method than the company's organization hierarchy, you can redefine the organization table:

- Use cost centers as a project code or name to keep track of project costs
- Use one of the user-defined organization levels and/or cost centers for the names of managers and project leaders, respectively

Generate Revenue

Today's technologies allow telephone equipment to be shared by multiple complexes with shared facilities, each, served by a single switch with shared access to WATS lines or other discounted long distance services. To charge calls placed by patients, students, or tenants, define the organization levels and cost centers accordingly and use printed copies of the organization detail report as the actual telephone bill for selected organization levels and/or cost centers. Prepare a true invoice using the Custom Report Module of the Enhanced Reporting package.

Bill Back Clients

Calls placed on behalf of clients or particular projects, particularly by professional service departments who account for their time and bill their clients accordingly, can be billed back to the client.

Use the detail or summary account code report printout as the actual bill to a client.

Measure Productivity

Organizations such as telemarketing firms, credit collection agencies, and sales departments require intensive use of their phones.

Use the organization detail report to check calls made by selected extensions. within such organizations. Are employees making enough calls? Who are they calling?

Use the selection report to check incoming calls received by selected extensions. How busy is the customer service department?

Use the selection report on incoming calls in support of service calls. Police, fire departments, security agencies, or any customer-service-oriented organization may want to compare the time of a complaint, call for service, etc. with the time when help was actually dispatched.

Stop Facilities Misuse

Calls that incur excess usage charges can result because of ignorance or misunderstanding on the part of the user, or because the ARS (Automatic Route Selection) pattern in the switch is set incorrectly.

Use the call-type report to find if there are many calls under the SPCL call-type name, then pinpoint details to calls to directory assistance via the selection report (even small 50-cent calls can add up to a large bill).

Use the call-type Report to find long-distance calling patterns. Are long-distance calls using the WATS facility appropriately?

Optimize Network

Many long-distance service alternatives exist today. SDN, WATS, tie, FX, and T1 lines are a few examples. An optimally designed network for each of your sites has the proper mix of these services.

Use your facilities group report to monitor loads. If the load for a trunk within a facility appears too large, coupled with little or no usage on other lines, some of the other circuits may need servicing. Light usage may also justify deleting some lines.

Use the facility usage report (available with the Enhanced Reporting Module) to analyze busy-hour traffic patterns. Then pinpoint facility usage for those hours with a selection report. Busy lines at peak hours require rerouting to more expensive back-up lines. Perhaps changing internal calling patterns to a different time of day can solve network delays. Heavy usage may also justify adding some lines.

Analyze Your Telephone Bill

Define the reporting period on reports to coincide with your carrier's telephone billing cycle. Then use the call-type report or selection summaries for that carrier for comparison against the telephone bill they send you.

If some of the network's sites are located in areas without equal access and the same sites are using carriers that do not have answer supervision, they may be billed for incomplete or unanswered calls. Obtain a selection summary on short-duration calls and send it in for a credit refund.

Database Management Procedures

7

This chapter describes the procedures for viewing and/or altering the databases defined in the setup procedure. It is divided into the following sections:

- *Managing the Call Record Database* — describes the procedure for controlling and interpreting the flow of call-record data from each site's switch and the procedure for managing call records after they have been processed.
- *Managing the Call Rating Database* — describes the procedures for looking up and changing CA V2's call-record rating structure.
- *Managing the Organization Database* — describes the procedures for looking up, changing, or creating entries in your company organization table.
- *Managing the System Database* — describes the procedures for viewing and changing database information that affects the overall CA V2 system.

Managing the Call-Record Database

CA V2 receives call records via directly connected sites. If your system is polling with the Integrated Poller option, CDRUs and/or LSUs collect raw call records to send to the processor according to a schedule. The functions described in this section control the transmission of call records to the CA V2 processor and enable manipulation of the database they create.

NOTE:

Configuration of the Integrated Poller option is described in detail in *Cost Allocator Version 2 Integrated Poller Module* (555-006-509), which is part of the option package.

Editing Call-Record Database Information

To view and/or update system parameters for call-record collection use the `Edit System Parameters` function.

Procedure

1. From the main menu, select `System`, then `System Parameters`. A screen similar to the one below appears. (Data-entry fields that do not pertain to this procedure are shaded.)

```
COMMANDS: Update Exit
          Update the displayed record
-------------------------------------------------------
                    EDIT SYSTEM PARAMETERS
-------------------------------------------------------
                          Company Name
        ABC Company
                     Organization Level Headings
 REGION    ;DIVISION       ;DEPARTMENT          ;UNIT    ;

                  Applications Interface Information
      System Name:
      System Path:
    Transfer Time:
  Sequence Number:
                                                          Days
  Privacy Option? Y                     Call Record File Retention: 0
     Store Locals? Y                      Raw SMDR File Rentention: 3
     Min Duration: 0:00:02                  Report File Rentention: 75
```

2. Press <U>pdate to access the data-entry fields described in the following list.

   - `Privacy Option?` <Y>es to display the last 4 digits of a call of 7 or more digits as ****, <N>o otherwise. (This applies only to allocation, organization, and account-code detail reports.)

- `Store Locals?` <Y>es to store local calls, <N>o otherwise.
- `Min Duration.` Minimum duration required, in 0:00:00 format, to retain a call record.
- `Call Record File Retention.` Number of days (0-4 digits) to retain call record files. For example, if the call-record file-retention period is 25 days, on the 26th day the first day's records are deleted.
- `Raw SMDR File Retention.` Number of days (0-4 digits) to retain raw SMDR files. For example, if the raw SMDR file-retention period is 10 days, on the 11th day the first day's records are deleted.
- `Report File Retention.` Number of days (0-4 digits) to retain report files. For example, if the report file-retention period is 25 days, on the 26th day the first day's reports are deleted.

NOTE:

The number of report files retained impacts the amount of storage space available to store call records. You may wish to enter a low number in this field to increase the call record database capacity.

3. Press <RETURN> to move from one field to another. Enter data from the keyboard or, when available, press <F1> to use a help menu. When complete press <ESC>.
4. Press <E>xit to return to the menu system.

Editing Call-Collection Configuration

Use this function to enter, view, or update the standard call-collection configuration of each site.

Procedure

1. From the main menu, select `System,` then `Call Record Collection.` A screen similar to the one below appears. Use <Q>uery, <N>ext, or <P>revious to display the desired site.

```
COMMANDS   Query  Next  Previous  Detail  Exit
           Find  detail  record
-------------------------------------------------------------------
                    EDIT  CALL  COLLECTION  CONFIGURATION
-------------------------------------------------------------------

                        Site:  Headquarters
```

2. Press <D>etail to display a screen similar to the one below. Press <U>pdate to access the data-entry fields described in the following list.

```
COMMANDS: [redacted] Master Detail Exit
          Update the Displayed Record
-----------------------------------------------------------------------
                    EDIT CALL COLLECTION CONFIGURATION
-----------------------------------------------------------------------

                         Site: Headquarters

          Collection Device Direct            Site Enabled  N
         Call Record Format s75-fr1v1            Time Zone  6
         Communication Type 1             Daylight Savings  Y
```

- `Site` (not editable). The name associated with this site.
- `Collection Device.` The device sending the call records to CA V2 (either `Direct` or `Direct CDRU.`
- `Call Record Format.` The programmed format of call records from this site's switch.

The table below lists the default call-record formats.

Table 7-1. Default Call Record Formats

Source	Call Record Type	Call Record Format	Collection Method
System 75 or Definity Generic 1	LSU format - D3 -5-digit account code - 12-digit account code - 14-digit account code - 15-digit account code	dg1ac5 dg1ac12 dg1ac14 dg1ac15	polled
System 85 or Definity Generic 2	18 word - unformatted ASCII -5-digit account code -12-account code -14-digit account code -15-digit account code	dg2uac5 dg2uac12 dg2uac14 dg2uac15	direct/polled
Definity Generic 1	24 word - unformatted ASCII	dg1u24w	direct/polled
System 85 or Definity Generic 2	24 word - unformatted ISDN	dg2u24w	direct/polled
System 75 or Definity Generic 1	teleseer format	teleseer	direct
System 85 or Definity Generic 2	D3 -5-digit account code -12-digit account code -14-digit account code -15-digit account code	dg2ac5 dg2ac12 dg2ac14 dg2ac15	polled
System 85 Definity Generic 2	Formatted ASCII -5-digit account code -12-digit account code -14-digit account code -15-digit account code	dg2fac5 dg2fac12 dg2fac14 dg2fac15	polled
Dimension Feature Package 8, 11, 12	SMDR-DO -15-word formatted ASCII -5-digit account code -12-digit account code -14-digit account code -15-digit account	dg2f5do dg2f12do dg2f14do dg2f14do	direct

Table 7-1. Default Call Record Formats (concluded)

Source	Call Record Type	Call Record Format	Collection Method
Dimension Feature Package 8, 11, 12	LSU 18-word BCD unformatted -5-digit account code -12-digit account code -14-digit account code -15-digit account code	 dg2bcd5 dg2bcd12 dg2bcd14 dg2bcd15	polled
Dimension Feature Package 8, 11, 12	LSU-DO - 18-word formatted ASCII -5-digit account code -12-digit account code -14-digit account code -15-digit account code	 dg2dim5 dg2dim12 dg2dim14 dg2dim15	direct
Definity G3	LSU format - D3 - 5-digit account code -12-digit account code -14-digit account code -15-digit account code	g3ac5 g3ac12 g3ac14 g3ac15	direct/polled
System 25 or Merlin	18-word formatted - D8	s25f18w	direct/polled
Spirit 24/48	D8	spirit24	direct/polled
Mitel SX 20/50/100/200	D8 - 12 & 24 hour mtisx200	direct/polled	
Mitel SX 2000	D8 - 12 & 24 hour mtix2000	direct/polled	
Merlin Legend Base & ISDN	D8	merlisdn	direct/polled
NEC 2400	D8 - 6-digit trunk neax2400	polled	
ROLM 9751	D8	rolm9751	direct/polled

- `Communication Type.` A number that corresponds to a port connected to the collection device identified for this site.

NOTE:

The `Communication Type` indicates a port connected to the type of collection device used by this site. Each direct connection requires a separate port. For example, `Port Number 1` (configured with `Edit CDR Port Information`) is directly connected to the switch at Site 1. `Communication Type` for Site 1 must be `1.`

- `Site Enabled?.` <Y>es to enable call record collection from this site, <N>o otherwise.
- `Time Zone.` A number from 0-23 that represents the site's time difference from Greenwich time (GMT).
- `Daylight Savings.` <Y>es if the site observes daylight savings, <N>o otherwise.

3. Press <RETURN> to move from one field to another. Enter data from the keyboard or, when available, press <F1> to use a help menu. When complete press <ESC>.

4. Press <E>xit to return to the menu system, <M>aster to return to the previous screen, or <D>etail to display a screen similar to the one below.

```
COMMANDS:  Update  Master Exit
           Update the Displayed Record
-------------------------------------------------------------------------
                      EDIT CALL COLLECTION CONFIGURATION
-------------------------------------------------------------------------

                          Site:  Headquarters

             Collection Device:  Direct              Site Enabled?  N
            Call Record Format:  s75-fr1v1              Time Zone:  6
            Communication Type:  1               Daylight Savings?  Y

                Port Baud Rate:  2400
                Port Data Bits:  7
                Port Stop Bits:  1
                   Port Parity:  E
         Software Flow Control?  N
```

5. Press <U>pdate to access the data-entry fields described in the following list.

   - `Port Baud Rate.` The speed of data transmission from the switch or poller system — 300, 600, 1200, 2400, 4800, or 9600 bits/second.

   - `Port Data Bit.` The number of bits used in the transmission of a single character from the switch or poller system — 7 or 8 bits. If data bit is 8, set parity to <N>one.

   - `Port Stop Bit.` The number of bits trailing after the transmission of a single character from the switch or poller system — 1 or 2 bits.

   - `Port Parity.` The type of parity check (if any) used by transmissions from the switch or poller system — <E>ven, <O>dd, or <N>o parity check.

   - `Software Flow Control.` <Y>es if this connection uses the XON/XOFF protocol, <N>o otherwise.

6. Enter or select data entries the same way you did in the previous screen. When complete press <ESC>.

7. Press <M>aster to return to the previous screens or <E>xit to return to the menu system.

Editing Stored Call Records

Use this function to view and update call records that have been processed and stored in the database. You may have to do so, for example, to change an incorrectly dialed account code.

Procedure

1. From the main menu, select `Call Rating`, then `Call Records`, and finally `Edit Stored Call Records`. A screen similar to the one below appears. Use <Q>uery, <N>ext, or <P>revious to display the desired site

```
COMMANDS: [redacted] Next Previous Detail Exit
          Query database for record
-------------------------------------------------------------------------
                          EDIT STORED CALL RECORDS
-------------------------------------------------------------------------

                        Site:  Headquarters
```

2. Press <D>etail to display a screen similar to the one below.

```
COMMANDS: [redacted] Next Previous Master Update Remove Exit
          Query database for record
-------------------------------------------------------------------------
                          EDIT STORED CALL RECORDS
-------------------------------------------------------------------------

            Site:  Headquarters                 Extension:  1234
        GMT Time:  17:49 Nov 1 1991       Dialed Access Code:  111
      Local Time:  12:49 Nov 1 1991         Used Access Code:  222
        Duration:  3:33:33                Authorization Code:
         NPA/NXX:  716/381                      Account Code:  12345678901234
   Dialed Digits:  1-703-560-1234                       BCC:
            Cost:  .75                                  IXC:
          Source:  V                                    INS:
       Direction:  O                                 MA-UUI:
      Trunk Line:  1101                     Condition Code:  E
             ANI:                                   Rating:  T
         Carrier:  1
```

3. Use <Q>uery to search the database in the fields: `Site`, `Local Time`, `Extension` (if no authorization code exists), `Authorization Code`, or `Account Code`. Or use <N>ext and/or <P>revious to page through the site's entire call-record database until the desired record is displayed.

4. Press <U>pdate to access the data-entry screen and make changes to data in any of the fields in the following list: `GMT Time`, `Local Time`, `Duration`, `NPA/NXX`, `Dialed Digits`, `Cost`, `Source`, `Trunk Line`, `ANI dialed sequence`, `Dialed Access Code`, `Access Code Used`, `Authorization Code`, `Account Code`, `BCC`, `IXC`, `INS`, `MA-UUI`, `Condition Code`, and/or `Rating`.

5. Press <ESC> when complete. You can edit another call record by repeating steps 3 and 4. To search another site's call records press <M>aster and repeat steps 2-4.

6. When complete, press <E>xit to return to the menu system.

Scheduling Call-Record Deletion

Use this function to view call-storage details and schedule call-record deletion. Call records in the database will be deleted according to the frequency and date entered here. Those records that are older than the number of retention days established with the `Site Information` function will be cleared from the database. After each deletion, the `Deletion Date` will be reset according to the specified frequency.

Procedure

1. From the main menu, select `Call Rating,` then `Call Records,` and finally `Schedule CDR Deletion.` A screen similar to the one below appears.

```
COMMANDS:  Update  Exit
           Update the displayed record

                        SCHEDULE CDR DELETION

                  Deletion Date:  Nov 15, 1991
                      Frequency:  D
                 Retention Days:  75

     Number of Call Records Stored:  250,125
       Date of Oldest Call Record:  Aug 15, 1991
        Date of Newest Call Record:  Nov 1, 1991
```

2. Press <U>pdate to access the data-entry fields described in the following list.

   - `Deletion Date.` The month, day, and year (in *mm/dd/yy* format) to perform the first scheduled call deletion.

   - `Frequency.` How often a call record deletion should occur: <Y>ear, <Q>uarterly, <M>onthly, <B>iweekly, <W>eekly, <D>aily, <H>ourly, <O>nce, <N>ever, or a number of days. (Daily is recommended to keep the call-record database from occupying too much storage space.)

   - `Retention Days` (not editable). The maximum number of days, specified in the *Edit Systems Parameters* function, that call records are to be retained in the database. After that time period, records will be deleted.

   - Screen displays indicate the `Number of Calls Stored, Date of the Oldest Call Record,` and `Date of the Newest Call Record.`

3. Press <RETURN> to move from one field to another. Enter data from the keyboard or, when available, press <F1> to use a help menu. When complete press <ESC>.

4. Press <E>xit to return to the menu system.

Managing the Call-Rating Database

The functions described in this section enable you to make changes in the rating processes that affect the entire system, as well as those for specific sites.

Editing Site Information

Use this function to verify or change basic site information, including tax percentages for all calls to or from a site.

Procedure

1. From the main menu, select `Administration,` then `Site Information.` A screen similar to the one below appears. Use <Q>uery, <N>ext, or <P>revious to display the desired site.

```
COMMANDS [redacted] Next Previous Update Exit
         Query database for record
-------------------------------------------------------------------------
                          EDIT SITE INFORMATION
-------------------------------------------------------------------------
          Site Name:
        Site Number: 1
        Site PBX ID:  M35529-001
       Site Address:
          Site City:
     Site State Zip:
 Site Contact Person:
         Site Phone:

 Site Tax Percentage:   Fed: 0.0   Suppress Authorization Code Printing?  Y
                      State: 0.0                 Store Raw Call Records?  N
                     County: 0.0
                      Other: 0.0
```

2. Press <U>pdate to access the data-entry fields described in the following list.

   - `Site Name.` The name, 1-15 characters, that you gave this site when it was installed.

   - `Site Number` (not editable). A number that corresponds to the order in which the site was installed.

   - `Site PBX ID.` The site identifier for data received via the Application Interface.

- `Site Address.` The street location of this site, in a maximum of 40 characters. (This data is for informational purposes only.)
- `Site City.` The city location of this site, in a maximum of 30 characters. (This data is for informational purposes only.)
- `Site State Zip.` The state and zip code corresponding to the address and city of this site, in a maximum of *2* characters (state) and 5 or 11 digits (zip). (This data is for informational purposes only.)
- `Site Contact Person.` The name of an individual at this site, in a maximum of 40 characters. (This data is for informational purposes only.)
- `Site Phone.` The number to use when contacting this site, in a maximum of 10 characters. (This data is for informational purposes only.)
- `Site Tax Percentage.` A percentage tax rate in each of four categories `(Fed, State, County,` and `Other)` that applies to all call costing associated with this site. A blank results in a 0% tax application.
- `Suppress Authorization Code Printing?` <Y>es to suppress printing of all authorization codes attached to this site, <N>o otherwise.
- `Store Raw Call Records ?` <Y>es to create a database of unprocessed call records from this site, <N>o otherwise.
- `Installation` and `Last Update` (not editable). The time and date of the initial installation of this site and the time and date of its most recent rate update.

3. Press <RETURN> to move from one field to another. Enter data from the keyboard or, when available, press <F1> to use a help menu. When complete press <ESC>.
4. Repeat steps 2 and 3 to edit any site as necessary. Press <E>xit to return to the menu system.

Editing the Telephone System Configuration

After the telephone system hierarchy is entered in the site setup process, you may need to view or edit it. Such tasks as changing the rating information of a dial access code, adding a dial access code or trunk line to an existing facility group or a new site on the network can be performed with the `Telephone System Config` function.

Procedure

1. From the main menu, select `Call Rating,` then `Edit Telephone System Config.` A screen similar to the following one appears. Use <Q>uery, <N>ext, or <P>revious to display the desired site.

```
COMMANDS:  Query Next Previous Update Detail Exit
           Query database for record
-------------------------------------------------------------------------
                    EDIT TELEPHONE SYSTEM CONFIGURATION
-------------------------------------------------------------------------

                         Site:  Headquarters
```

2. Press <D>etail to view a screen similar to the one below.

```
COMMANDS:  Query Next Previous Add Update Remove Master Exit
           Find detail record
-------------------------------------------------------------------------
                    EDIT TELEPHONE SYSTEM CONFIGURATION
-------------------------------------------------------------------------

                         Site:  Headquarters

                  Trunk Group:  ???
                     Facility:  CO
```

The list that follows describes the fields that are displayed.

- `Site` (not editable). The name associated with this site.
- `Trunk Group.` An arbitrary number, 0-9999, you assign to a group of trunk lines providing the same telephone service.
- `Facility.` The name, 1-5 characters, you assign to a type of telephone service available at this site. A call type with the same name is created for any facility name other than CO.

NOTE:

You generally name a facility “CO” that uses rate tables to cost calls. When a CO facility is identified by the trunk listed in a call record, the system is able to associate it with a call type and a table for rating.

You should name facilities that are not COs in a descriptive manner that reflects the type of calls they handle. For example, **FX-LA** and **FX-NY** describe two facilities that support FX call types, the first in Los Angeles the other in New York. A complete listing of all CA V2 default call types, tariffed and non-tariffed, is in the chapter 3, *Call Types.*

3. Use <Q>uery, <N>ext, or <P>revious to display the existing facility groups.

4a. To add a new facility group, press <A>dd and enter new data followed by <ESC>.

4b. To change displayed data, press <U>pdate and enter different data followed by <ESC>. If you introduce a new facility name, follow the screen’s instructions.

4c. To delete a displayed facility group, press <R>emove and follow the screen’s instructions.

5. Press <M>aster to return to the previous screen, or <E>xit to return to the menu system. To view or add further information concerning this configuration, press <D>etail. A screen similar to the one below appears.

```
COMMANDS: Query Next Previous Add Update Remove Maste[redacted] Exit
          Find detail record
-------------------------------------------------------------------------
                    EDIT TELEPHONE SYSTEM CONFIGURATION
-------------------------------------------------------------------------

                         Site:  Headquarters

              Facility Group:  ???
                    Facility:  CO
            Dial Access Code:  ?????
                   Rate Type:  T
                        Rate:     $0.00
                     Carrier:  1
                Carrier Name:  ATT
                     NPA/NXX:  716/271
                      Tandem:  N
          Cost Inbound Calls:  N
```

The list that follows describes the fields that are displayed.

- `Dial Access Code.` The number 0 to 99999, used to identify a billing scheme for a particular telephone facility. CA V2 translates this from the “access code used” reported by AT&T switches (“line used” in a SPRINT 2448 or "facility" in a System 25 or MERLIN) for outgoing calls. If the switch does not report access codes (as in the case of trunks dedicated to incoming calls), the dial access code is an arbitrary number that you assign — for example, the first trunk number in each group —to act as an identifier for billing.

- `Rate Type.` Rate calls per <C>all, per <M>inute, by <T>ariff, or <N>one if the facility’s calls are not rated by CA V2.

- `Rate.` The flat rate, up to $999.99, used to cost this facility’s calls. You may average facility rates, using actual telephone bills from two or three billing periods, to arrive at an accurate rate. Enter $0.00 if **T** is entered in `Rate Type` above.

- `Carrier.` The number, (generally 1-4 in basic installations, 1-16 in systems that include the Enhanced Rating II module), identifying the carrier rate table used to cost this facility’s calls. If this is a nontariffed facility, enter 0 for “flat rate”.

  Dual carrier sites number carriers in the following way: 1 = primary, 2 = secondary, 3 = primary operator-assisted, and 4 = secondary operator-assisted. If you have a single-carrier site 1 = primary and 2 = primary operator-assisted. Do not use those numbers associated with operator-assisted rate tables.

NOTE:

Carrier information is automatically loaded into your system when a site is installed. See *Carrier Information* in chapter 3, for general carrier information. You can view and/or edit a site’s carrier information using the procedure in *Editing Carrier Information* later in this chapter.

- `Carrier Name` (not editable). The internally-derived name corresponding to the carrier number. If the carrier for this trunk line is 0, its name will be “flat”.

- `NPA/NXX` (not editable). The area code and exchange that are the basis of this carrier's tariffs.

- `Tandem.` <Y>es or <N>o to cost tandem calls, or <D>iscard.

- `Cost Inbound Calls.` <D>iscard, accept at <N>o cost, or <C>ost incoming calls using this dial access code. Indicate a flat rate for this dial access code if you do not have ANI.

6. Use <Q>uery, <N>ext, or <P>revious to view the existing dial access codes.

7a. To add new information, press <A>dd and enter data from the keyboard or, when available, press <F1> and use a help menu. When complete press <ESC>.

7b. To change displayed information, press <U>pdate and enter different data from the keyboard or, when available, press <F1> and use a help menu. When complete press <ESC>.

7c. To delete displayed data, press <R>emove and follow the screen’s instructions.

8. Press <M>aster to return to the previous screen, or <E>xit to return to the menu system. To view or add further information concerning this configuration, press <D>etail. A screen similar to the one below appears.

```
COMMANDS: Query Next Previous Add Update Remove Maste[redacted] Exit
          Find detail record
-------------------------------------------------------------------------
                    EDIT TELEPHONE SYSTEM CONFIGURATION
-------------------------------------------------------------------------

                        Site:  Headquarters

              Facility Group:  ???
                    Facility:  CO
            Dial Access Code:  ?????
                   Rate Type:  T
                        Rate:     $0.00
                     Carrier:  1
                Carrier Name:  ATT
                     NPA/NXX:  716/271
                      Tandem:  N
          Cost Inbound Calls:  N

                  Trunk Name:  ??????
```

The list that follows describes the field displayed.

- `Trunk Name.` The identifier, up to 7 digits, reported by the switch for the actual route of a call. For AT&T switches, the trunk is the “access code used” (“line used” in a SPIRIT 2448, “facility” in a System 25 or MERLIN). For non-AT&T switches, the trunk is the string of numbers reported as “trunk number” or “circuit” in the call record.

9. Use <Q>uery, <N>ext, or <P>revious to display the existing trunk names.

10a. To add a new trunk line, press <A>dd, enter the new data, and press <ESC>.

10b. To change a displayed trunk line, press <U>pdate, enter different data, and press <ESC>.

10c. To delete a displayed trunk line, press <R>emove and follow the screen’s instructions.

11. Press <M>aster to return through the screens one detail at a time, or press <E>xit to return to the menu system.

Editing the Dialed-Digit Processing Table

Use this function to make changes or additions to the default DDP table.

Procedure

1. From the main menu, select `Call Rating,` then `Dialed Digit Processing.` A screen similar to the one below appears. Use <Q>uery, <N>ext, or <P>revious to display the desired site.

```
COMMANDS:  Query Next Previous [redacted] Exit
           Find Detail record
-------------------------------------------------------------------------
                        EDIT DIALED DIGIT PROCESSING
-------------------------------------------------------------------------

                           Site:  Headquarters
```

2. Press <D>etail to view a screen similar to the one that follows.

```
COMMANDS:  Query Next Previous Add [redacted] Remove Master Exit
           Update the displayed record
-------------------------------------------------------------------------
                        EDIT DIALED DIGIT PROCESSING
-------------------------------------------------------------------------

                           Site:  Headquarters

 Search For:
      Dialed Digits:  0%
          Direction:  O              Trunk Group:

 Cost As:
        Cost Method:  T                     Rate:  0.00  ( cost per call )
        Trunk Group:                   Call Type:  ZERO+
  Substitute Digits?  N            Dialed Digits:
```

The list that follows describes the fields that are displayed.

- `Site` (not editable). The name associated with this site.

- `Search For.` The `Dialed Digits` and `Trunk Group` that require additional processing.

  — `Dialed Digits.` A dialing pattern of up to 16 digits (0-9 and/or # and *) that requires extra processing. Use ? and % as wildcards:

    ? may be used repeatedly in the dialed pattern to match a single digit in that position. Each ? in the “search for” field is replaced with the corresponding “cost as” digit. For example, searching for 442???? and costing as 4429999 matches 4421234 and, if digit substitution is indicated, reports it as 4429999.

    % may be used as the ending character in the dialed pattern to match any number of trailing digits in that position. A % in the “search for” pattern is replaced by the corresponding “cost as” trailing digits. For example, searching for #30% and costing 10288% matches #3017162236446 and replaces it with 1028817162236446.

    The “search for” field should not have any separators (such as “-” in “555-6440”);

  — `Direction.` A search can specify <O>utbound, <I>ncoming, or <T>andem for the direction of calls to be processed. A blank means all.

  — `Trunk Group.` The trunk group number, specified in the telephone system configuration, to which this dialing pattern search is limited. A blank means any trunk group.

- `Cost As.` The costing and replacement instructions for processing calls that match the `Search For` conditions.

  — `Cost Method.` <D>iscard the call, cost according to the specified <T>runk group, cost per <M>inute or per <C>all according to the rate indicated below. <N>o means to use the cost already associated with the call; for example, a call record received on a tape may already have been costed, or if no such cost is associated, substitute zero.

  — `Rate.` The rate ($0.00-$320.00) per minute or per call.

  — `Trunk Group.` If <T> is chosen as the `Cost Method,` this trunk group number is used to determine the call’s cost. A blank in this field will result in the `Search For` dialing pattern being costed according to the information provided in the call record. If the trunk group has multiple access codes, the first access-code record associated with that trunk group is used for calculating the cost.

— `Call Type.` The name of a call type to be substituted for adjustments and reporting purposes. A blank in this field results in no change in the call type indicated by the call record.

— `Substitute Digits?` <Y>es stores the “cost as” dialed digits. <N>o retains the number reported by the switch.

— `Dialed Digits.` A dialing pattern to use for rating. Values should result in a called number substitution with enough initial digits to be properly rated. A blank field indicates recosting via some other rating method.

3. Use <Q>uery, <N>ext, or <P>revious to view the existing DDP table.

4a. To add a new DDP entry, press <A>dd and enter new data followed by <ESC>.

4b. To change displayed data, press <U>pdate and enter different data followed by <ESC>.

4c. To delete a displayed DDP entry, press <R>emove and follow the screen’s instructions.

5. To view and/or edit another site’s DDP table, press <M>aster and repeat the steps 2-4.

6. Press <E>xit to return to the menu system.

Editing Call-Type Adjustments

Use this function to adjust call-type costing information. You may need to do so, for instance, when new call types are added to the database, if adjustments for a particular time period or situation are required, or if you wish to revert to the defaults.

Procedure

1. From the main menu, select `Call Rating,` then `Call Type Adjustments.` A screen similar to the one below appears. Use <Q>uery, <N>ext, or <P>revious to display the desired site.

```
COMMANDS:  Query Next Previous [redacted] Exit
           Find detail record
-------------------------------------------------------------------------
                        EDIT CALL TYPE ADJUSTMENTS
-------------------------------------------------------------------------

                        Site:  Headquarters
```

2. Press <D>etail to view a screen similar to the one below.

```
COMMANDS:  Query Next Previous [redacted] Master Exit
           Update the displayed record
-------------------------------------------------------------------------
                        EDIT CALL TYPE ADJUSTMENTS
-------------------------------------------------------------------------

                          Site:  Headquarters
                     Call Type:  IS-OL
                        Markup:  0.0
                     Surcharge:  0.0
                 Minimum Charge:  0.0
               Minimum Duration:  0.00.30
            Network Correction:  0.0
      Exempt From Federal Tax?  N
        Exempt From State Tax?  N
       Exempt From County Tax?  N
        Exempt From Other Tax?  N
```

3. Press <U>pdate to access the data-entry fields described in the following list.

   - `Site` (not editable). The name associated with this site.
   - `Call Type.` The name of a call type identified for this site by the telephone system configuration, or the name given to a type of record received via tape.
   - `Markup.` A markup/discount percentage, entered as -100 to 100, and applied in the call-costing formula to determine if the minimum or adjusted call cost should be reported. A 0 (the default) in this field results in no markup adjustment.
   - `Surcharge.` An amount, entered as -$99.99 to $99.99, added in the call-costing formula to determine if the minimum or adjusted call cost should be reported. A 0 (the default) in this field results in no surcharge adjustment.
   - `Minimum Charge.` An amount ($0.0-320.00) to compare to a call's adjusted cost, the greater of which is stored as the call's cost.

NOTE:

The formula to determine a call's cost in a report is as follows:

The reported cost = the largest of

(a) minimum charge or

(b) adjusted cost, where adjusted cost =
(call cost +(call cost $\times$ markup $\times$ 0.01) + surcharge) $\times$ (1 + (tax $\times$ 0.01))

- `Minimum Duration.` A length of time in hours, minutes, and seconds (0:00:00 to 8:53:20) that defines a valid call. Call records with a shorter duration are discarded. Defaults are 30 seconds for non-INCOM calls, 0 seconds for INCOM calls.

- `Network Correction.` A length of time in hours, minutes, and seconds (0:00:00 to 0:03:00) subtracted from a call's duration before it is rated. The actual duration is stored unadjusted. Defaults are 15 seconds for any non-INCOM calls, 0 for INCOM calls. The network correction helps to rate a call based on actual conversation time by subtracting time used for dialing, connection, etc.

- `Exempt From Federal/State/County/Other Tax?` For any of the types of taxes, <Y>es if the call type is exempt from the site's tax rate, <N>o otherwise.

4. Press <RETURN> to move from one field to another. Enter data from the keyboard or, when available, press <F1> to use a help menu. When complete press <ESC>.

5. To display and/or edit another site's call-type table, press <M>aster to return to the previous screen, select another site, and repeat step 2-4.

6. When complete, press <E>xit to return to the menu system.

Editing Carrier Information

After your system setup, you will generally use this function to view information. Changes may be necessary for reasons like the following:

- A site has a rating table update (for example, new discounted or increased rates are put into effect)

- The Enhanced Rating II module has been added to your system, increasing the number of carriers allowable per site

- A site has become part of the equal-access network, necessitating a change in a carrier dialing prefix

NOTE:

The Enhanced Rating II Module impacts this function in two ways: it allows the number of carrier services per site to increase from 2 to 8, and it allows the interpretation of ISDN information in a call record. These enhancements are described in *Cost Allocator Version 2 Enhanced Rating II Module* (555-006-511), which is part of the option package.

Procedure

1. From the main menu, select `Call Rating,` then `Carrier Infomation.` A screen similar to the one below appears. Use <Q>uery, <N>ext, or <P>revious to display the desired site.

```
COMMANDS:  Query Next Previous [redacted] Exit
           Find Detail record
-------------------------------------------------------------------------
                      EDIT CARRIER INFORMATION
-------------------------------------------------------------------------

                           Site:  Headquarters
```

2. Press <D>etail to view a screen similar to the one below.

```
COMMANDS: Next Previou[redacted] Master Exit
          Update the displayed record
-------------------------------------------------------------------------
                      EDIT CARRIER INFORMATION
-------------------------------------------------------------------------

                                Site: Headquarters
                     Carrier Number: 1
                       Carrier Name: ATT
             Carrier Dialing Prefix: 10288
   Number of Digits in Non-Equal
         Access Authorization Code: 0
                      Rating Method: T
                       Carrier Rate: 0.00
    Rate Source Area Code/Exchange: 716/381
   ISDN Interexchange Carrier Code: 288
   ISDN Network Service Field Code: 03
             ISDN Carrier Direction: 0
  Order Number and Date Installed: M99999-0000 12:00 Oct 31 1991
 Update Number and Data Installed: M99999-0000 12:00 OCt 31 1991
```

The list that follows describes the fields that are displayed.

- `Site` (not editable). The name associated with this site.
- `Carrier Number` (not editable). The internally derived number associated with this carrier (1-4 for a standard system, 1-16 for systems with the Enhanced Rating II module installed, and 0 to represent a flat rate). This number serves as the linking device between a facility and a tariff table.
- `Carrier Name` (not editable). The internally derived abbreviation for the carrier indicated by the carrier number.

  Actual carrier names are used for example, ATT or MCI (each with operator-assisted counterparts). The zero carrier is always associated with flat rating.

- `Carrier Dialing Prefix.` The code (in 10xxx format) dialed to access a carrier's network in an equal-access area. This number is supplied as part of an installation and should not be changed, except if equal access is not available to you. In that case, the carrier's local phone number, typically 950xxxx, should be substituted.

- `Number of Digits in Non-Equal Access Authorization Code.` A value (typically a 14-digit code) representing the number of digits in your account number with this carrier. Use if equal access is not available.

- `Rating Method` (not editable). <T>ariff if carrier is anything but zero, <M>inute or <C>all otherwise.

- `Carrier Rate.` The default $0.00 is associated with <T>ariff rating, a per-minute or per-call flat rate otherwise.

- `Rate Source Area Code/Exchange` (not editable). For all carriers except `FLAT,` the NPA/NXX that is the basis of this carrier's tariffs. This field is blank if carrier is `FLAT.`

- `ISDN Interexchange Carrier Code.` A system-generated code that identifies the ISDN carrier. The information in this field is used by the Enhanced Rating II module. If a value appears in this field, do not change it.

- `ISDN Network Service Field Code.` A system-generated code that identifies the ISDN carrier service. The information in this field is used by the Enhanced Rating II module. If a value appears in this field, do not change it.

- `ISDN Carrier Direction.` The direction of calls using this ISDN service.

- `Order Number and Date Installed` (not editable). The identifier for this site's rating tables and the time and date of installation.

- `Update Number and Date Installed` (not editable). The values in this field duplicate those above until an update is performed.

3. To change the displayed data, press <U>pdate and enter data from the keyboard. When complete, press <ESC>.

4. To view another site's carrier table, press <M>aster to return to the previous screen, select another site, and repeat steps 2 and 3.

5. When complete, press <E>xit to return to the menu system.

Editing the Holiday Table

Rates can be provided in the tariff tables to enable holiday costing. CA V2 provides a default list of 10 dates during which discounted holiday rates apply. Use this function to specify, view, update, or remove the dates in the list.

Procedure

1. From the main menu, select `Call Rating,` then `Holidays.` A screen similar to the one below appears.

```
COMMANDS: Query Next Previous Update Remove Exit
          Update the displayed record
-------------------------------------------------------------------
                        EDIT HOLIDAY TABLE
-------------------------------------------------------------------

                 Date of Holiday: Jan 1, 1992
```

The single data-entry field is described below.

- `Date of Holiday.` The month, day, and year (mm/dd/yy) when telephone companies' holiday discounts apply.

NOTE:

These dates would generally be for those holidays that occur on Monday through Saturday, since Sunday and holiday rates are very similar, if not the same.

2. Use <Q>uery, <N>ext, or <P>revious to view the list of holiday dates.

3a. To edit the displayed date, press <U>pdate, enter the changes, and press <ESC>.

3b. To delete the displayed date, press <R>emove.

4. When complete, press <E>xit to return to the menu system.

Editing the Rate Tables

Use this function primarily to view the carrier rate tables installed for each site in your CA V2 network. Indicate the carrier, and CA V2 performs a search and displays the rate tables associated with the NPA/NXX. In this way, you can preview the cost of any call before it is made or reported costs can be verified.

CAUTION:

It is possible to edit your rate tables; however, we recommend that they remain unaltered. To update your rate tables, use the procedure in chapter 8, `Installing Software Updates and Modules.`

Procedure

1. From the main menu, select `Call Rating,` then `Rate Tables.` A screen similar to the one that follows appears. Use <Q>uery, <N>ext, or <P>revious to display the desired site.

```
COMMANDS:  Query Next Previous [redacted] Exit
           Find Detail record
-------------------------------------------------------------------------
                          EDIT RATE TABLES
-------------------------------------------------------------------------

                        Site:  Headquarters
```

2. Press <D>etail to view a screen similar to the one below.

```
COMMANDS: Query Change carrier Next Previou[redacted] Master
          Update the displayed record
-------------------------------------------------------------------------
                          EDIT RATE TABLES
-------------------------------------------------------------------------

 Site Name: Headquarter  Carrier: ATT      Carrier NPA/NXX: 716/381
 NPA/NSS: 703/560         Tariff: usa.osol       Call Type: MTS
  ------------ BANDS --------------                  Period: DAY    RPSB
    Mileage    Initial  Add'l.                    Surcharge: 0.000
       292     60 sec   60 sec               Minimum Charge: 0.000
   ->  430     0.216    0.215     ------------DISCOUNT------------
       925     0.230    0.230    Start
      3000     0.249    0.249     Time  M-F   Sat   Sun    Hol
                                  8:00  DAY   NITE  NITE   HOL
                                 17:00  EVE   NITE  EVE    HOL
                                 23:00  NITE  NITE  NITE   NITE
```

The list that follows describes the fields that are displayed.

- `Carrier` (change carrier only). The carrier code for this rate table.
- `NPA/NXX` (query only). A valid area code and exchange for long-distance domestic calls, or the country code for international calls.
- `Tariff` (not editable). The internal name of the rate table — for example, “usa.os-ol” for MTS rates, “intrastate” for LATA rates, etc.

- `Carrier NPA/NXX` (not editable). The area code and exchange associated with the selected carrier (the displayed carrier's "home" NPA/NXX), from which this carrier's rates are derived.

- `Call Type` (not editable). The call-type name associated with the file name displayed in `Tariff.`

- `Bands.` The rates for the period on display (see below). The rates are computed on the basis of the call's destination in terms of miles from the carrier's NPA/NXX.

- `Period` (not editable). The name of the rate period associated with the bands displayed.

  — The field is blank if the tariff specifies rate-period discounts at a % of standard rates. In this case, the `Bands` contain the standard rates and the `Discount` table contains the specific % discount values.

  — The field contains the names `DAY, EVE, NITE` (or `STD, DISC, ECON`), and `HOL.` In this case, the `Bands` contain the rates of the specified `Period` and the `Discount` table displays the rate-period names.

- `RPSB` (rate-period-specific-billing) appears next to `Period` if the discount for a rate period is applied only to the portion of a call within that period (otherwise, discounts in effect at the start of the call are applied to the entire call).

- `Surcharge` and `Minimum Charge.` Flat rates expressed in dollars to three decimal places — used typically to set local message-unit rates according to the formula:

  Call cost = the greatest of (a) minimum charge or (b) call cost less applicable discount plus surcharge.

NOTE:

Do not confuse this `Surcharge` and `Minimum Charge` with those established in the `Call Type Adjustment` function. The `Edit Rate Tables` adjustments are used in the actual costing of the call that is committed to the database. Call-type adjustments are made for reporting purposes and do not effect the cost in the database,

- `Discount.` The display of specific discount values or rate period names. When a discount entry is changed, all entries for the entire period change. Rate period's starting and ending times are not editable.

3. Press <C>hange carrier until the name of the carrier of interest is displayed. To view this carrier's rates for a specific area, press <Q>uery, enter the area code and exchange (or country code) in the NPA/NXX fields, and press <ESC>. CA V2 retrieves the appropriate table and displays it with an arrow next to the mileage band in use for that area.

4. To change the displayed data, press <U>pdate and enter data from the keyboard. When complete, press <ESC>.

5. To view and/or edit another site's rate tables, press <M>aster to return to the previous screen, select another site, and repeat steps 2-4.

6. Press <E>xit to return to the menu system.

Managing the Organization Database

Use these functions to keep the company's organization database updated.

Editing the Organization Hierarchy Levels

Use the `System Parameters` function primarily to view the levels you defined for the organization hierarchy or to make changes in the application interface configuration. Editing the organization-level definition is not recommended and can result in erroneous reporting.

Procedure

1. From the main menu, select `System`, then `System Parameters`. A screen similar to the one below appears. (Fields that do not pertain to the organization hierarchy are shaded.)

```
COMMANDS: [redacted] Exit
          Update the displayed record
-------------------------------------------------------------------------
                          EDIT SYSTEM PARAMETERS
-------------------------------------------------------------------------
                              Company Name
          ABC Company
                        Organization Level Headings
 REGION    ;DIVISION       ;DEPARTMENT          ;UNIT    ;

                     Applications Interface Information
     System Name:
     System Path:
   Transfer Time:
  Sequence Number:
                                                                    Days
   Privacy Option?:                        Call Record File Retention: 0
   Store Locale?:                            New SMDR File Retention: 3
   Min Duration: 0:00:02                       Report File Retention:75
```

The list that follows described the non-shaded fields.

- `Company Name.` Your company's name that prints on all reports.
- `Organization Level Headings.` The names of the defined organization levels.
- `System Name.` The Unix name for the remote system where the Manager IV application resides and prepares files for transfer using the applications interface. Use up to 60 characters.
- `System Path.` The pathname on the remote system for the applications interface to find the files to transfer.
- `Transfer Time.` The hour and minutes for the daily transfer of transaction files from the remote site to the CA V2 processor.
- `Sequence Number` (not editable). The number of this transfer. A break in sequence-number order could indicate a lost transmission.

2. To change the display, press <U>pdate to enter data into the fields from the keyboard. When complete, press <ESC>.

NOTE:

Make changes to `Organization Level Headings` information in the following manner: starting with the highest level, type in the level name and add spaces to total the maximum name length for that level. Follow the spaces with a semicolon. Then type in the next level name and continue in the same manner until all levels are defined.

3. <E>xit to return to the menu system.

Editing Cost Center Information

Use this function to view, change, or add organization-level names and/or cost centers attached to new or existing organization levels.

Procedure

1. From the main menu, select `Organization,` then `Cost Centers,` and finally `Edit.` A screen similar to the one that follows appears.

```
COMMANDS:  Query Next Previous [redacted] Update Remove Detail Exit
           Add a record to the database
-------------------------------------------------------------------------
                              EDIT COST CENTERS
-------------------------------------------------------------------------
                     Cost Center Name:  Cost Center I

  REGION    ;DIVISION       ;DEPARTMENT          ;UNIT    ;
  South     ;Sales          ;Product Management  ;A1

                                   Markup
                              Calls:  +10.0%
                            Service:  +10.0%
                          Equipment:  +10.0%

                                Charges Tax
                                  Exempt?
                          Federal?    N
                            State?    N
                           County?    N
                            Other:    N
```

The list that follows describes the data-entry fields displayed.

- `Cost Center Name.` The name of a cost center that belongs to the organization-level definition displayed.

- `Organization Level Definition.` The name of each organization level associated with this cost center. (A heading above the data-entry field, displays the defined levels. Semicolons indicate maximum number of characters allowed per level.)

- `Markup.` A percentage markup or discount (-100 to 100) for this cost center.

NOTE:

Cost center markups appear in an allocation detail report as a separate entry in the cost center totals.

- `Charges Tax Exempt?` <Y>es if this cost center is exempt from each tax type (`Fed, State, County,` and `Other`), <N>o otherwise.

2a. To add a cost center, press <A>dd, enter data from the keyboard, or press <F1>, when available, to use a help menu. Press <ESC> when complete.

NOTE:

To enter the organization-level definition, type each name followed by a semicolon. The system will blank-pad the entries when you press <RETURN>.

2b. To make changes to displayed cost-center information, press <U>pdate and enter data from the keyboard, or press <F1>, when available, to use a help menu. Press <ESC> when complete.

2c. To delete a displayed cost center, press <R>emove and follow the screen instructions.

2d. To display current and year-to-date cost center information about telephone usage, press <D>etail. If your system includes the Enhanced Chargeback module, services and equipment information is also shown. Press <M>aster to display the previous screen.

3. To display another group of organization-level names, press <Q>uery, <RETURN>, and <F1>. Select another group of names and press <ESC>. The first cost center attached to this group is displayed.

4. Repeat steps 2 and 3 as appropriate. When complete, press <E>xit to return to the menu system.

Making Global Cost Center Updates

This function is used to transfer a group of cost centers from one organization-level definition to another.

Procedure

1. From the main menu, select `Organization`, then `Cost Centers`, and finally `Global`. A screen similar to the one below appears.

```
COMMANDS: [redacted] Exit
          Transfer cost centers to new organization hierarchy
-------------------------------------------------------------------------------
                          GLOBAL COST CENTER UPDATE
-------------------------------------------------------------------------------

                        Source Organization Field:
     South     ;Sales          ;Hardware            ;0001    ;

                       Destination Organization Field:
     Southeast ;Sales          ;Hardware            ;0002    ;
```

The list that follows describes the fields in this function.

- `Source Organization Field.` The current organization-level definition of the cost centers to be transferred.
- `Destination Organization Field.` The organization-level definition to receive the cost centers.

2. To move a group of cost centers between organization levels, press <T>ransfer and enter data from the keyboard or, when available, press <F1> and use a help menu. When complete, press <ESC> to begin the transfer.

3. To perform another cost-center transfer, repeat step 2.

4. Press <E>xit to return to the menu system.

Editing Owner Information

This function is used to view, update, add, or remove owner records.

Procedure

1. From the main menu, select `Organization`, then `Owners`, and finally `Edit`. A screen similar to the following one appears. Press <Q>uery, <N>ext, or <P>revious to display the desired site.

```
COMMANDS:  Query Next Previous [redacted] Exit
           Find Detail record
-------------------------------------------------------------------------
                                EDIT OWNERS
-------------------------------------------------------------------------

                              Site:  Headquarters
```

2. Press <D>etail to view a screen similar to the one below.

```
COMMANDS: [redacted] Next Previous Add Update Remove Master Exit
          Query database for record
-------------------------------------------------------------------------
                                EDIT OWNERS
-------------------------------------------------------------------------

                                 Site: Headquarters
                                Owner: KELLY, P
                            Extension: 1001
                          Cost Center: CC01
                             Location: First Flr
                          Room Number: 1001

                               Set ID:
      Privacy/Suppress Detail (P/S/N): P

         Date Assigned to Cost Center: Nov 18, 1992
                  Previous Cost Center:
 Date Assigned to Previous Cost Center:
```

The list that follows describes the fields that are displayed.

- `Site` (not editable). The name associated with this site.
- `Owner`. The name, 1-30 characters, of an individual associated with this site.

NOTE:

CA V2 adds the default “UNASSIGNED” to each site in the network for an extension reported by the switch that has not been assigned an owner.

- `Extension.` The number of a voice terminal (0-9998) as it appears in a call record from the switch. Each extension is unique and can be associated with only one owner per site.

- `Cost Center.` The name of a valid cost center.

- `Location.` A descriptor, 1-20 characters, for the owner's location — for example, ground floor or shipping room.

- `Room Number.` The owner's room number or other area designation, 1-5 digits.

- `Set ID` (not editable). A number generated by the application interface that identifies a group of equipment types assigned to this owner. A blank means not applicable.

- `Privacy/Suppress Detail.` The option for <P>rivacy or to <S>uppress call record details, or report records in the <N>ormal way.

NOTE:

Privacy masks the last four dialed digits of telephone numbers appearing in the detail reports and replaces them with asterisks. Suppression omits call details from detail reports but includes the suppressed call information in report subtotals and totals. Privacy and suppression apply to the selection allocation detail, organization detail, and account-code detail reports.

- `Date Assigned to Cost Center.` The month, day, and year, in *mm/dd/yy* format, that this owner was assigned to the current cost center.

When an owner is reassigned to a new cost center, the following information is displayed.

- `Previous Cost Center.` The owner's assigned cost center before the current assignment.

- `Date Assigned to Previous Cost Center.` The month, day, and year, in *mm/dd/yy* format, that this owner was assigned to the previous cost center.

3. Press <Q>uery, <N>ext, or <P>revious to view all owners associated with this site.

4a. To add an owner, press <A>dd and enter data from the keyboard or, when available, press <F1> to use a help menu. When complete, press <ESC>.

4b. To make changes to the owner information, press <U>pdate and enter data from the keyboard or, when available, press <F1> to use a help menu. When complete, press <ESC>.

4c. To delete the displayed owner, press <R>emove and follow the screen's instructions.

NOTE:

Do not delete an owner record before the allocation detail report is run at the end of the current accounting period.

5. To view or edit another site's information, press <M>aster, select another site, and repeat steps 2-4.

6. Press <E>xit to return to the menu system.

Making Global Owner Updates

Use this function to assign a defined cost center to a group of owner records. Specify owners by indicating a range of extension numbers, a range of authorization codes, or both. If the range includes extensions that do not currently exist, new unnamed owner records will be created using the missing extensions and attached to the designated cost center.

For example, a new cost center is added and needs to be populated before the exact user/extension combinations are known. If a range of 50 new extensions is specified, the cost center is populated with 50 unnamed owners, each attached to one of the new extensions. On the other hand, if you specify a range of existing extensions, those extensions and their owners are transferred between cost centers and unnamed owners are created for any new extensions in that range.

Procedure

1. From the main menu, select `Organization,` then `Owners,` and finally `Global Update.` A screen similar to the one below appears.

```
COMMANDS:  Update  Exit
           Update or add owners for cost centers
-------------------------------------------------------------------------
                          GLOBAL OWNERS UPDATE
-------------------------------------------------------------------------

                            Owner Records
                       Site Name:  Headquarters
                 Extension Numbers:  1101              to: 1120
               Authorization Codes:  2101              to: 2120

                   Assign Owner Records to Cost Center

                       Cost Center:  Cost Center I
                     Effective Date:  12/31/91
```

The list that follows describes the fields that are displayed.

- `Site Name.` The site that is associated with the range of extensions.

- `Extension Numbers.` The range of extension numbers to be transferred between cost centers.

- `Authorization Codes.` The range of authorization codes to be transferred between cost centers.

NOTE:

Entering both an extension range and an authorization code range narrows the transfer to extensions that also fall within the authorization-code range.

- `Cost Center.` The name of the existing cost center to which the defined group of owner records is to be reassigned.

- `Effective Date.` The month, day, and year, in *mm/dd/yy* format, that reassignment takes place.

2. To change displayed data, press <U>pdate and enter different data from the keyboard or, when available, press <F1> to use a help menu. When complete, press <ESC>.

3. Press <E>xit to return to the menu system.

The transfer will take place as designated.

Editing Account Code Information

You typically use an account code by dialing a code associated with a client account before dialing the telephone number. When the feature is available, the switch adds the account identifier to the call record. Use the `Edit Account Code` function to view and/or update the account-code table created in the setup process, as well as to add new account codes or delete inactive accounts.

When account codes appear in call records they are checked against the account code table. Call records without account codes are given the default account code name “UNASSIGNED”. When a call record shows an account code not currently in CA V2’s list, it is added with the account name left blank. If an active account code is removed, call records with that account code have the name changed to “UNASSIGNED”.

Procedure

1. From the main menu, select `Organization,` then `Account Codes,` and finally `Edit.` A screen similar to the following one appears. Press <Q>uery, <N>ext, or <P>revious to display the desired site.

```
COMMANDS: Query Next Previous [redacted] Exit
          Find Detail record
-------------------------------------------------------------------------
                          EDIT ACCOUNT CODES
-------------------------------------------------------------------------

                          Site: Headquarters
```

2. Press <D>etail to view a screen similar to the following one appears.

```
COMMANDS: Query Next Previous Add [redacted] Remove Master Exit
          Update the displayed record
-------------------------------------------------------------------------
                          EDIT ACCOUNT CODES
-------------------------------------------------------------------------

                          Site: Headquarters

                   Account Code: 101

                   Account Name: ABC Legal Services
```

The list that follows describes the fields that are displayed.

- `Site` (not editable). The name associated with this site.
- `Account Code.` 1 to 16 characters as they appear in call records, identifying a client account, project code, etc. You can enter a combination of the symbols * or # and 0-9. For accurate reporting, the account-code table in CA V2 must correspond to the programmed account codes in each site's switch.
- `Account Name.` The name associated with the account code, 1-20 alphanumeric characters.

3. Press <Q>uery, <N>ext, or <P>revious to view all owners associated with this site.

4a. To add an account code, press <A>dd and enter new data followed by <ESC>.

4b. To change the displayed account code information, press <U>pdate and enter different data followed by<ESC>.

4c. To delete the displayed account code, press <R>emove followed by <ESC>.

5. To view or edit another site's account codes, press <M>aster and select another site. Then repeat steps 2-4.

6. Press <E>xit to return to the menu system.

Editing Authorization-Code Information

This function supports a switch feature that allows a call to be charged to an owner's extension regardless of its origin. The call record is stored using the associated extension as the source of the call. Use the `Edit Authorization Code` function to view and/or update the authorization-code table created in the setup process, as well as to add new authorization codes or delete any that are inactive.

Authorization code information is included in the organization and allocation reports. Following an owners name, the code is listed along with its associated call details. If printing of authorization codes is suppressed with the `Site Information` function, the digits are replaced by question marks.

An unidentified authorization code in a call record is added to the database as a 99999 extension of the UNATTACHED cost center, and is reported with the code number as the owner name. The call record is stored with the 99999 extension as the source of the call.

Procedure

1. From the main menu, select `Organization,` then `Authorization Codes.` A screen similar to the one below appears.

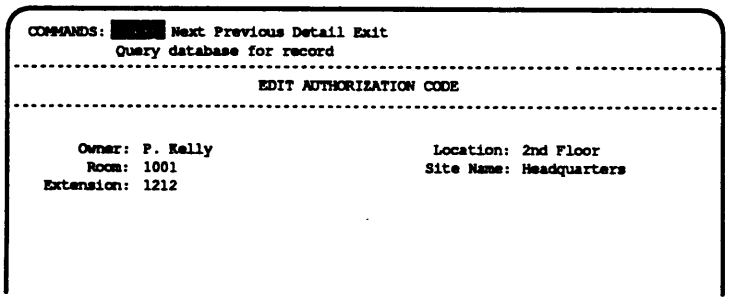

2. Press <Q>uery, and enter a valid owner's name from the keyboard. Or, press <F1>, select an owner from the help menu, and press <ESC>. Press <N>ext or <P>revious to view all the extension/site combinations belonging to this owner.

3. Press <D>etail to display a screen similar to the following one.

```
COMMANDS:  Query Next Previous [redacted] Update Remove Master Exit
           Add a record to the database
-------------------------------------------------------------------------
                          EDIT AUTHORIZATION CODE
-------------------------------------------------------------------------

                       Owner: P. Kelly

        Room:  1001                Location:  2nd Floor
   Extension:  1212               Site Name:  Headquarters



             Authorization Code:  1234
                    Description:  AT&T
```

The list that follows describes the fields that are displayed.

- `Authorization Code.` The credit card or other number (1-16 digits), as reported by the switch.
- `Description.` An identifier associated with the authorization-code number.

4a. To add an account code press, <A>dd, enter data from the keyboard, and press <ESC>.

4b. To change the displayed authorization code information, press <U>pdate, enter data from the keyboard, and press <ESC>.

4c. To delete the displayed authorization code, press <R>emove and follow the screen's instructions.

CAUTION:

Remember that updating authorization-code assignments should be done in coordination with a change in the programmed output from the switch. Otherwise, updating this table could result in an abundance of reported 99999 extensions. Changes may best be made between these coordinated efforts by use of <R>emove or <A>dd commands.

5. To view or edit another owners authorization codes, press <M>aster, select another owner, then repeat steps 3 and 4.

6. Press <E>xit to return to the menu system.

Managing the System Database

During setup, parameters were created for ports, peripherals, and other features that collectively comprise the system database. Use the functions described in this section to view and update data that has a system-wide impact.

Editing the Printers Configuration

Use this function to update the configuration of the system's default printers.

Procedure

1. From the main menu, select `System`, then `Printers Configuration`. A screen similar to the one below appears.

```
COMMANDS: [redacted] Exit
          Update - <ESC> to continue, ^C to cancel, <RETURN> for next field.
-----------------------------------------------------------------------------
                                   PRINTERS
-----------------------------------------------------------------------------
  80 Col. Printer: epson
     Spooler Path: lp
 132 Col. Printer: epson
     Spooler Path: wide epson|lp
```

The list that follows describes the fields that are displayed.

- `80 Column Printer.` The name, 1-40 characters, assigned to the 80-column default printer.
- `Spooler Path.` The UNIX path name for the 80-column print spooler.
- `132 Column Printer.` The name, 1-40 characters, assigned an 80-column default printer that prints in a compressed mode or a 132 column printer.
- `Spooler Path.` The UNIX path name for the 132-column print spooler. Include the program Wide in your pathname if using an 80-column printer.

2. To make changes, press <U>pdate and enter data from the keyboard. When complete, press <ESC>, then <E>xit to return to the menu system.

Editing the Devices Configuration

Use this function to enter, view, or update the configuration of up to nine devices that, in addition to the default printers, can receive output from reports.

Procedure

1. From the main menu, select `System`, then `Device Configuration`. A screen, similar to the one below appears.

```
COMMANDS: [redacted] Previous  Next  Exit
          Update - <ESC> to continue, ^C to cancel, <RETURN> for next field.
-----------------------------------------------------------------------------
                                   DEVICES
-----------------------------------------------------------------------------
    Device Name 1: tape
    Device Path 1:
```

The list that follows describes the fields that are displayed.

- `Device Name 1…9`. The name that describes the type of device associated with this device name number — for example, tape or laser printer.
- `Device Path 1…9`. The UNIX path name associated with this device.

2. Use <N>ext or <P>revious to display the list of 9 devices.
3. To make changes, press <U>pdate and enter data from the keyboard. When complete, press <ESC> followed by <E>xit to return to the menu system.

Editing Call-Collection Port Information

Part of the CA V2 software installation involves configuring all the ports to be used for call collection. The system is tested for successful call collection during the acceptance test and, following a positive outcome, all call-collection ports are disabled. After the system has been released to the users, the call-collection ports are enabled during on-site setup. Use this function to enter or update call-collection port information or remove a port dedicated to call collection.

CA V2 has a maximum of 16 ports. The standard configuration uses one port for a direct connection to the on-site switch and another for remote maintenance. The remaining 14 ports are for remote call collection.

Procedure

1. From the main menu, select `System`, then `Edit CDR Port Information`. A screen similar to the following one appears.

```
COMMANDS: Query Next Previous Add Update Remove Exit
          Update the displayed record
-------------------------------------------------------------------------
                        EDIT CDR PORT INFORMATION
-------------------------------------------------------------------------

            Port Name: tty03
         Port Enabled? Y
          Port Number: 3
          Description: G3
```

The list that follows describes the fields that are displayed.

- `Port Name.` The UNIX name for this port in *tty00* format. If the local switch has a direct connection, enter it first.

- `Port Number.` An arbitrary number assigned to identify the type of collection device connected to this port. A switch or other direct connection requires a unique number for each port.

NOTE:

Ports serving polling modems used by the integrated poller can be grouped under the same communication type number. Polling via the integrated poller is fully explained in *Integrated Poller Module* (555-006-509).

The Port Number must match the `Communication Type` number in the `Edit Call Collection Configuration` function (or the `Edit Poller Configuration` function if the system has the Integrated Poller option) for a site sending calls through this port.

- `Port Enabled?` <Y>es to make the port active, <N>o otherwise.

- `Description.` An optional comment may be added here. Use this field to identify the device indicated by the port number.

2. Use <Q>uery to view a specific port, or <N>ext and/or <P>revious to display a list of all the ports.

3a. To add new port information, press <A>dd, enter data from the keyboard, and press <ESC>.

3b. To change the displayed port information, press <U>pdate, enter data from the keyboard, and press <ESC>.

3c. To delete the displayed port information, press <R>emove, then <ESC>.

4. Press <E>xit to return to the menu system.

Editing the Alarm Parameters

Use this function to view or update sanity- and alarm-port information.

Procedure

1. From the main menu select, `System`, then `Alarm Parameters`. A screen similar to the one below appears.

```
COMMANDS: Update  Exit
          Update the displayed record
-------------------------------------------------------------------------
                          EDIT ALARM PARAMETERS
-------------------------------------------------------------------------
   System Sanity Port: \dev\tty06
            Baud Rate: 1200 Data Bits: 8   Stop Bits: 1   Parity: None

           Alarm Path: \dev\tty07
            Baud Rate: 1200 Data Bits: 8   Stop Bits: 1   Parity: None

       Originator ID: 000-000-001

     Telephone Number  Destination 1            Destination 2
            Primary:   9-560-0101                 9-271-0101
          Secondary:   9-560-0102                 9-271-0102

 Last Destination 1 Message:
 NO PREVIOUS MESSAGES
 Last Desgination 2 Message:
 NO PREVIOUS MESSAGES
```

The list that follows describes the fields that are displayed.

- `System Sanity Port.` The device name, in a *\dev\tty00* format, used for monitoring the receipt of the sanity character. This transmission acts as a check that your system is running properly. Use up to 56 characters.

- `Port Baud Rate.` The data transmission speed for the sanity port — 300, 1200, 2400, 4800, or 9600 bits/second.

- `Port Data Bit.` The number of bits used in the transmission of a single character to this port — 7 or 8 bits. If data bit is 8, parity is set to <N>one.

- `Port Stop Bit.` The number of bits trailing after the transmission from this port — 1 or 2 bits.

- `Port Parity.` The type of parity check (if any) used by the transmissions from this port — <E>ven, <O>dd, or <N>o parity check.

- `System Alarm Port.` The device name, in *\dev\tty00* format, used for sending alarms to Trouble Tracker. Use up to 56 characters.

- `Port Baud Rate.` As described above, but applies to the alarm port.
- `Port Data Bit.` As described above, but applies to the alarm port.
- `Port Stop Bit.` As described above, but applies to the alarm port.
- `Port Parity.` As described above, but applies to the alarm port.
- `Originator ID.` A number that identifies the source of a transmission received by Trouble Tracker. Use up to 55 characters.
- `Telephone Number Primary (Destination 1).` The primary telephone number to send alarms to this remote location.
- `Telephone Number Secondary.` The secondary telephone number to send alarms to this remote location.
- `Telephone Number Primary (Destination 2).` The primary telephone number to send alarms to this remote location.
- `Telephone Number Secondary.` The secondary telephone number to send alarms to this remote location.

2. To change the displayed port information, press <U>pdate, enter data from the keyboard, and press <ESC>. When complete, press <E>xit to return to the menu system.

Setting Up Multi-Site Summary Reports

CA V2 has the capability to poll cost center information from remote CA V2 installations for use in allocation summary reports.

NOTE:

Because allocation reports are based on user-defined reporting periods, the information they reflect always represents the last completed period. Information for the current date is not immediately available.

Cost center database information used in allocation summary reports (summaries of current period and year-to-date data) is updated by running an allocation detail report. To maintain information covering the same period for all cost centers, allocation detail reports must run on all cost centers before before polling a site for summary allocation information.

Scheduling Multi-Site Polling

Use this function to set up a polling schedule of remote CA V2 installations.

Procedure

1. From the main menu, select `System`, then `Multi-Site Summary`, and finally `Schedule Polling`. A screen similar to the following one appears.

```
COMMANDS:  Update  Exit
           Update the displayed record
-------------------------------------------------------------------------
                        SCHEDULE MULTI-SITE POLLING
-------------------------------------------------------------------------

    Frequency  U                          Next Run Date  00:00 Nov 9 199
 Period Start  Oct 1 1992
```

   The list that follows describes the fields that are displayed.

   - `Frequency.` The interval describing how often to poll other CA V2 installations: <O>nce, <N>ever, or according to the< U>ser defined schedule.

   - `Next Run Date.` The date the initial poll takes place. After the first poll occurs, this date updates according to its frequency.

   NOTE:
   Only dates past the end of the current user-defined period are acceptable.

   - `Period Start` (not editable). The date representing the start of the current user defined period.

2. Press <U>pdate and enter data from the keyboard or, when available, press <F1> to use a help menu. When complete, press <ESC>.

3. Press <E>xit to return to the menu system.

Editing Multi-Site Polling Information

Use this function to create or edit the list of CA V2 installations whose cost center information is required in allocation summary reports. You can also use this function to initiate an immediate poll of a selected site.

Procedure

1. From the main menu, select `System`, then `Multi-Site Summary`, and finally `Polling Information`. Enter the root password at the prompt. A screen similar to the one below appears.

```
COMMANDS: Add  Query Update Next Previous Remove Start Exit
          Add a record to the database
-------------------------------------------------------------------------
                          MULTI-SITE POLLING
-------------------------------------------------------------------------

     System Name:  moscom1

     System Path:  /usr/ca/cas

     Pollable?     Y
```

The list that follows describes the fields that are displayed.

- `System Name`. The name of a remote system where CA V2 is installed. The system must be defined in `/usr/lib/uucp/systems`.
- `System Path`. The pathname of the CA V2 application home directory on the remote system.
- `Pollable?` <Y>es to poll this site for cost center information, <N>o otherwise.

2a. To add a site, press <A>dd and enter data from the keyboard or, when available, press <F1> to use a help menu. When complete, press <ESC>.

2b. To display another site's information, use <Q>uery, <N>ext, or <P>revious.

2c. To make changes to the displayed information, press <U>pdate and enter new data from the keyboard or, or, when available, press <F1> to use a help menu. When complete, press <ESC>.

2d. To delete displayed information, press <R>emove and follow the screen's instructions.

2e. To begin an immediate poll of the displayed system, press <S>tart.

3. Press <E>xit to return to the menu system.

Editing the User-Defined Reporting Period

Use this function to review, update, remove, or make additions to the list of dates that make up the user-defined reporting periods. Reporting periods cover the time from one period start date to the next.

NOTE:

Reports generated with the report period "U" contain information from the last completed user-defined reporting period. Reports scheduled using the user-defined reporting frequency must have a run date beyond the end of the current period.

Procedure

1. From the main menu, select `Administration`, then `Reporting Period`. A screen similar to the following one appears.

```
COMMANDS: [redacted] Update Next Previous Remove Exit
          Add a record to the database
-------------------------------------------------------------------------
                    EDIT USER DEFINED REPORTING PERIOD
-------------------------------------------------------------------------

                    Period Start Date:  1/10/91
            Clear Year-To-Date Totals?  N
                           Run Date:    1/11/91
```

The list that follows describes the fields that are displayed.

- `Period Start Date`. The month, day, and year *(mm/dd/yy)* beginning each period.

NOTE:

A single entry in `Period Start Date` is interpreted as a monthly reporting schedule beginning on that date. The single date is also interpreted as the start of the fiscal year. Year-to-date totals will be reset on this date the following year.

- `Clear Year-To-Date Totals?` <Y>es for year-to-date totals to begin on this date, <N>o otherwise.

- `Run Date`. The earliest date *(mm/dd/yy)* a report covering this user-defined period can run.

2. Use <N>ext and/or <P>revious to display a list of the user-defined report-period dates.

3a. To add a new date and information, press <A>dd, enter data from the keyboard, and press <ESC>.

3b. To make changes, press <U>pdate, data from the keyboard, and press <ESC>.

3c. To delete a displayed date, press <R>emove and follow the screen's instructions.

4. Press <E>xit to return to the menu system.

Editing the Security Levels

The system administrator can use this function to view or update the security levels of any user on the CA V2 system.

Procedure

1. From the main menu, select `Administration`, then `Security Levels`, and finally `Edit`. A screen similar to the one below appears.

```
COMMANDS:  Query Next Previous [redacted] Update Remove Exit
           Add a record to the database
-------------------------------------------------------------------------
                          EDIT SECURITY LEVELS
-------------------------------------------------------------------------

                        User Name:  P. Kelly
                         Login ID:  Kelly
                   Security Level:  3
                        Site Name:  Headquarters
          Region    ;Division    ;Department          ;Unit ;
          %         ;            ;                    ;     ;
```

The list that follows describes the fields that are displayed.

- `User Name`. The name of a CA V2 user.
- `Login ID`. An identifier, unique to this user, used to access the CA V2 application.
- `Security Level`. The security level (1, 2, or 3) assigned to this user.
- `Site Name`. The site to which this user's read/write access is confined. A blank means all. Wildcards are allowed.
- `Organization Level`. The level to which this user is limited in terms of reporting. A blank means all. Wildcards are allowed.

2. Use <Q>uery, <N>ext and/or <P>revious to display all the users on the system.

3a. To add a new user, press <A>dd, enter data from the keyboard, and press <ESC>.

3b. To change the display, press <U>pdate, enter data from the keyboard, and press <ESC>.

3c. To delete a displayed user, press <R>emove and follow the screen's instructions.

4. Press <E>xit to return to the menu system.

Standard Operating Procedures

8

This chapter provides descriptions and procedures for those system functions that are used during normal operation of the system.

This chapter is organized into the following sections:

- *Using the System Status Menu* — describes how to use this menu to display basic system status information.
- *Stopping and Starting Call Rating* — describes conditions that may require that call rating be terminated and how to restart the process.
- *Backing Up CA V2* — describes the conditions and procedures for performing regular system backups.
- *Using Tape Functions* — describes the procedures for introducing data into the system via tape.
- *Performing Other Standard Operations* — describes functions that involve loading data into, or removing data from, the CA V2 system.

Using the System Status Menu

This function provides an on-demand means to check the status of several basic system activities.

Procedure

1. From the main menu, select `Status`. A screen similar to the one below appears.

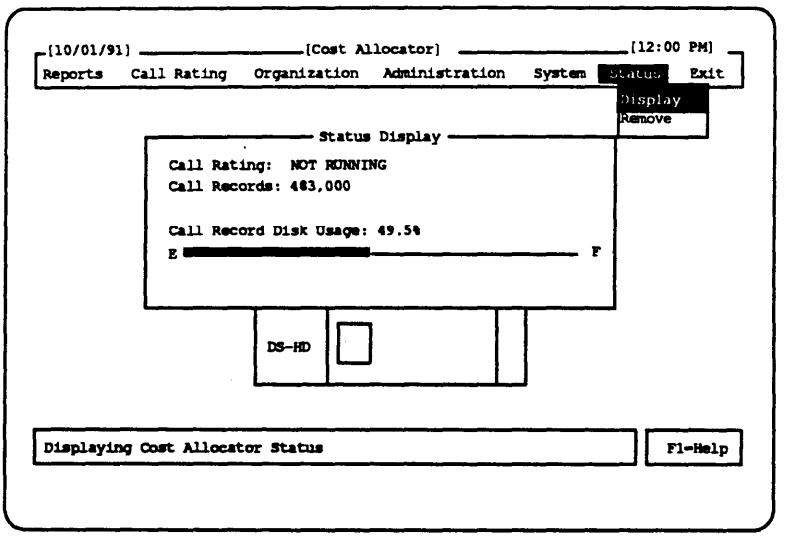

The list that follows describes the fields that are displayed.

- `Call Rating` (display only). A message relating the status of call rating as `RUNNING` or `NOT RUNNING`.
- `Call Records` (display only). The number of call records currently stored in the database.
- `Call Record Disk Usage` (display only). The percentage of the database storage area currently in use. (This field is followed by a graphic display of the disk usage.)

2. When finished viewing, press <R>emove to return to the menu system.

Stopping and Starting Call Rating

When some CA V2 procedures are invoked, the call-rating process is automatically halted. Use this function to manually control the rating process. You should stop call rating, for example, before performing a system backup, before making a high volume of organization database changes, or before changing to costing configurations.

Procedure

1. From the main menu, select `Call Rating`, then `Rating & Discounting`, and finally `Stop Rating`. The current status of call rating is displayed as `Call Rating Running`, followed by `Call Rating stopped`, or `Call Rating not running`.

2. Press <RETURN> to redisplay the menu system.

3. To restart the call rating process if it is stopped, from the main menu select `Call Rating`, then `Rating & Discounting`, and finally `Start Rating`. The current status of rating is displayed as `Call Rating not running`, followed by `Starting Call Rating`. Press <RETURN> to redisplay the menu system.

Backing Up CA V2

To minimize loss of data in case of system failure, you should always keep a full copy of the contents of your hard disk.

- We recommend performing a complete system backup onto tape after installing the CA V2 package and any system updates; thereafter, complete backups should be performed at regular intervals — for example, weekly or monthly — depending on the importance of maintaining call record information in each individual business.

- You may wish to perform incremental system backups between complete backups; however, after CA V2 has operated for a few months, incremental backups will not offer any time savings. This is because most of your disk space is used by the two call record files `cr.dat` and `cr.idx`, which are modified by every call added to the system. A call record occupies 230 bytes of storage (that is, the call-record file uses about 23 Mb per 100,000 call records); the CA V2 program and tables occupy about 11 Mb of storage.

NOTE:

We do not recommend performing individual user file backups.

Procedure

1. Log into CA V2. From the main menu, select `Call Rating,` then `Rating and Discounting,` and finally `Stop Rating.`

2. When the display messages indicate that rating has stopped, exit CA V2 and log in as **`root.`** At the root prompt, enter **`ulimit 4000000.`**

3. Log in as **`face.`** Follow the instructions in the *AT&T UNIX System V/386 Release 3.2.3 FACE User's/Administrator's Guide* to perform a complete (or incremental) system backup onto tape.

4. When the backup is complete, exit `face` and the `root` environment.

5. Log into CA V2. From the main menu, select `Call Rating,` then `Rating and Discounting,` and finally `Start Rating.`

The system is back to normal operating conditions.

CAUTION:

If you need to restore CA V2 files from tape, make certain to change the `ulimit` as documented above.

Performing Other Standard Operations

Use these functions to increase or decrease the size of your CA V2 network or update other information in your system.

Adding Sites

CA V2 is designed to expand its network to reflect a business' growth. A maximum of 255 sites are possible in a single network, some of which will most likely be added one or two at a time as new offices or branches are opened. You always introduced a site to the network with the `Site Installation` function. As each site is added, CA V2 assigns it a unique number that corresponds to its installation order. A detailed description of this procedure is in the Chapter 5, *Installing a Site.*

NOTE:

Installation of a site requires the successful completion of several processes. See the *Setting Up CA V2 Site Parameters* and *Creating the Organization Tables* sections in Chapter 5, *Setup Procedures,* for complete instructions for readying a site for call collection and reporting.

Removing Sites

Use this function to remove an existing site from the CA V2 network. All pertinent data is purged, including any scheduled reports for this site.

CAUTION:

Before removing a site, be sure to review all scheduled reports. If the site you are removing is the only one selected, edit the frequency of the report to <N>ever or remove the definition from the schedule. Othewise, according to the frequency indicated, a report is generated based on a site that no longer exists.

Procedure

1. From the main menu, select `Administration,` then `Site Removal.` A screen similar to the one below appears.

```
COMMANDS: Query Next Previous Remove Exit
          Remove the displayed record
-------------------------------------------------------------------------
                              REMOVE SITE
-------------------------------------------------------------------------

           Site Name:  Site 10              Site Number: 10
      Site Area Code:  703
       Site Exchange:  560
        Site Address:  1003 Maple Lane
  Site City State Zip:  Fairfax                  VA            22031
  Site Contact Person:  G. Zilla

  Site Tax Percentage:     Fed:  0.0   Suppress Authorization Code Printing?  Y
                          State:  0.5                 Store Raw Call Records?  N
                         County:  0.0
                          Other:  0.3

                             Date
              Installation:  12:00 Nov 1, 1991
               Last Update:  12:00 Nov 1, 1991
```

2. Use <Q>uery, <N>ext, or <P>revious to view a list of all the sites. The screen also displays the data entered for each site using the `Site Information` function.

3. Display the site to delete and press <R>emove. The message `Are you sure you want to delete site 000? Y/N` appears.

4. Enter **N** to abort the deletion process and return to the menu system or enter **Y** to continue the process.

5. Provide the root password. After CA V2 stops the call rating, the site is removed from the system.

6. When the screen displays a list of all records and or files that have been modified as a result of the removal, enter any key to return to the menu system.

Installing PBX Interfaces

As part of the CA V2 software installation, front-end interpreters for a number of call-record formats are loaded into the system. The formats that are supported by CA V2 are shown in *Table 7-1. Default Call-Record Formats.* During setup, a format for each site is selected. If a site requires an interpreter for a format not included in the default list, you can add it using this function. Use this function also to make version updates of the default formats.

NOTE:

To perform a PBX interface installation, you must access CA V2 using the login created to install your software. Generally, CA V2 is installed using the login **ca.** The installation login is part of the information passed on to you (the system administrator) from the account team.

Procedure

1. From the main menu, choose `Administration,` then `PBX Interfaces.` When the system is ready to read the interfaces disk, a prompt appears for the `root password.` After you supply the root password, a prompt asks which drive to use to read the interfaces.

2. Enter `1` or `0,` place the disks in the drive, and press <RETURN> to begin the installation. Or press <ESC> to abort.

3. When the installation is complete, remove the disk and press <RETURN> twice to return to the menu system.

Installing Software Updates and Modules

Use this function to upgrade major metro rates with custom rates, install system software updates, and/or load optional software modules.

NOTE:

To perform a software update or module installation, you must access CA V2 using the login created to install your software. Generally, CA V2 is installed using the login **ca.** The installation login is part of the information passed on to you (the system administrator) from the account team.

Procedure

1. From the main menu, select `Administration,` then `Software Updates & Modules.` When the system is ready to read the disk, a prompt appears for the `root password.`

2. Supply the root password. A prompt asks which drive to use to read the interfaces. Enter `1` or `0`, place the disks in the drive, and press <RETURN> to begin the installation. Or press <ESC> to abort.

3. When the installation is complete, remove the disk and press <RETURN> twice to return to the menu system.

Loading Bulk Data Files

Use this function to load files from a tape or other source into the CA V2 organization database. The following data files can be bulk loaded: cost center, account code, owner, and (if your system includes the Enhanced Chargeback option), charge ID and charges information.

Conventions that apply to all bulk-loaded files are listed below:

- The files must contain lines of text in ASCII format.
- Each line of text is terminated by pressing <RETURN>, fields are separated with the pipe <|> symbol without spacing before or after the <|>.
- Fields that do not contain information can be left blank, but not skipped.
- Records that do not conform are not loaded and are written to an error file.

Particulars about each file type and examples are shown in the paragraphs that follow. Complete field descriptions appear in *Managing the Organization Database,* in chapter 7.

Cost Center Data Files

Cost center records contain many data items not pertaining to the organization table. To create a cost center file, enter records in the format of the sample below. The list that follows refers to the numbers above the sample.

```
 1                  2                      3  4  5       6-22            23    24 25 26 27
cc|SOUTH;SALES;PRODUCT  MANAGEMENT;A1;|0|0|0||||||||||||||||||1001|N|N|N|N|
```

1 cost center record identifier (must appear at the beginning of each cost center entry)
2 organization level names (separate level names with semi-colons — use up to 78 characters)
3-5 enter 0
6-22 enter blanks for these fields
23 cost center name (1-15 characters — do not duplicate a cost center name already in the system)
24 this cost center is federal tax exempt (Y/N)
25 this cost center is state tax exempt (Y/N)
26 this cost center is county tax exempt (Y/N)
27 this cost center is exempt for other taxes (Y/N)

Account Code Data Files

To create an account code file, enter records in the format of the sample below. The list that follows refers to the numbers above the sample.

```
 1         2         3              4
acnt|HEADQUARTERS|101|ABC LEGAL SERVICES
```

1 account code record identifier (must appear at the beginning of each account code entry)
2 site name (1-15 character name of an existing site)
3 account code number (1-16 digits account code — unique to this site)
4 account name (1-20 characters describing this account)

Owner Data Files

To create an owners file, enter records in the format of the sample below. The list that follows refers to the numbers above the sample.

```
 1         2       3   4    5    6-7           8     9   10   11        12    13
own|HEADQUARTERS|N|1112|1001| | |JONES, CONNIE| |1005|BLDG 1 |1001|   |
```

1 owner record identifier (must appear at the beginning of each owner entry)
2 site name (1-15 character name of an existing site)
3 report option (P=private, S=suppress, N=normal)
4 extension number (0-99999 — unique to this site)
5 cost center (1-15 character name of an existing cost center)
6-7 enter a null character (press your spacebar once)
8 owner name (1-30 characters — one owner can be associated with more than one extension)
9 enter a null character (press your space bar once)
10 owner's previous cost center (the name of this owner's previous cost center or press your space bar once to enter a null character)
11 location (1-20 characters describing owner's location in the company)
12 room (1-5 characters — owner's room designation)
13 enter a null character (press your spacebar once)

Charge ID Data Files

To create an charge ID file, enter records in the format of the sample below. The list that follows refers to the numbers above the sample.

```
 1     2 3   4-7         8           9     10 11 12 13 14
chgid|Y|N|||||2222222222|HANDSET|P|N|N|N|N|
```

1 charge ID record identifier (must appear at the beginning of each charge ID entry)
2 <Y>es for equipment, <N>o for services
3 prorate charge (Y/N)

4-7 enter blanks for these fields
8 charge ID (1-9 characters)
9 charge ID name (describe this type of equipment or service in 1-20 characters
10 vendor cost type (D=charges accrue daily, P=charges accrue periodically)
11 this charge ID is exempt from federal taxes (Y/N)
12 this charge ID is exempt from state taxes (Y/N)
13 this charge ID is exempt from county taxes (Y/N)
14 this charge ID is exempt from other taxes (Y/N)

Charges Data Files

To create a charges file, enter records in the format of the sample below. The list that follows refers to the numbers above the sample.

```
1          2              3      4-6 7     8
charg|JONES, CONNIE|222222222||||Y|HEADQUARTERS
```

1 charges record identifier (must appear at the beginning of each charges entry)
2 owner (the name of an existing owner)
3 charge ID (the name of an existing charge ID)
4-6 enter blanks for these fields
7 itemize charges (Y/N)
8 site name (the name of an existing site)

Procedure

To bulk load information, use the following procedure.

1. From the main menu, select `Administration,` then `Bulk Data Files.` A screen similar to the following one appears.

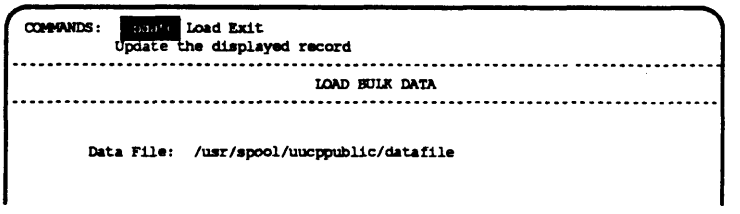

The list that follows describes the single field that is displayed.

- `Data File.` The full path name of the file containing the bulk load data. If the data is coming from a tape, it is read off the tape and into this file.

2. Press <U>pdate to access the screen, enter data from the keyboard, then press <ESC>.

3. Press <L>oad to begin the process. Press <E>xit to return to the menu system.

Maintenance and Troubleshooting Procedures

9

This chapter describes functions that you can use to prevent, understand, or resolve problems with the CA V2 system.

The chapter is organized into the following sections:

- *Invoking the UNIX Shell* — describes how to exit and re-enter CA V2 to perform activities outside the application.
- *Restarting Application Processes* — describes how to use this function to monitor problems with the application processes.
- *Acknowledging Alarms* — describes how to terminate the alarm screen display.
- *Viewing and Interpreting CA V2 Log Files* — describes how the log files are created, how to interpret the information they contain, and how to view or print them.
- *Reporting Trouble* — describes how to contact a system support group for resolution of persistent problems.

Invoking the UNIX Shell

Use this function if you are the system administrator, to access the UNIX shell for diagnostic and debugging purposes.

Procedure

1. From the main menu, select `System`, then `Invoke UNIX Shell`. You are placed in a directory named “tcms”, one level below the home directory.

2. To return to the application, type **`Exit`** at the `$` prompt. The CA V2 menu system is redisplayed.

Restarting Application Processes

Use this function to check that all application processes are running properly.

Procedure

1. From the main menu, select `System`, then `Restart Processes`. A display message asks for the `Installation user password`.

2. Enter the password. The system stops and restarts all application processes. Any process that does not restart properly invokes an on-screen `Alarm` and causes a message to be appended to the appropriate log file.

3. When a display message indicates that the application is operating, press <RETURN> to return to the menu system.

Viewing and Interpreting Log Files

CA V2 is constantly generating log messages containing information about system events such as errors, failures, and progress milestones. Each type of activity is given a “severity” threshold that determines if a message is retained in a file or discarded. In the case of severe errors or failures, two messages are generated; the first is appended to its appropriate log file, and the duplicate is appended to an alarm file. Log files can be viewed or printed using the `Log Files` function.

The table below describes the log files appearing most often in the log file directory.

Table 9-1. CA V2 Log Files

File Name	Contents
alarm	High severity level log messages
bulk	Bulk data-load activity
chkpc	Stop/start call-costing activity
delcr	Scheduled call-record deletion activity
direct	Direct connection activity
form	Screen display problems
install/pbx *mmddyy*	PBX/KTS interface installation activity
install/site *mmddyy*	Site installation activity
install/sitegen *mmddyy*	Custom rate table installation or update activity
install/software	CA V2 initial software setup activity
install/upd *mmddyy*	Software update or option installation activity
master	Background processes activity
misc	Front-end interface problems
poll	Polling interface activity
poller	Call-record collection activity or problems
presch.*yymm*	Scheduled report activity or problems
rate_edit	Rate edit activity
rating	Rating process activity or problems
reports	Report/table activity
sanity	Sanity port activity

Procedure

1. From the main menu, select `System`, then `Log Files`. A screen similar to the one below appears.

```
COMMANDS: Update View Print Exit
          Update the displayed record
-------------------------------------------------------------------------
                              VIEW/PRINT LOGS
-------------------------------------------------------------------------

                          Log File:  reports
```

The list that follows describes the single field displayed.

- `Log File.` The name of the file to be viewed or printed.

2. Press <U>pdate to access the field and <F1> to display a help menu with all available files listed. Select a file and press <RETURN> to complete the selection. Press <ESC> to complete the update.

3. Press <V>iew to bring the file on screen. When complete, press <RETURN> to go back to the function and <E>xit to return to the menu system.

4. Press <P>rint to have the file sent to a printer, and <E>xit to return to the menu system.

Acknowledging Alarms

The addition of new messages in the alarm file causes the on screen `Alarm` to begin flashing to alert you of a problem. Use this function to turn the alarm off.

Procedure

1. From the main menu, select `System,` then `Acknowledge Alarm.` The `Alarm` is disabled without leaving the menu system.

Reporting Trouble

If a problem arises when using CA V2, first attempt to solve it using the troubleshooting flowchart in the following pages. You may be able to resolve some problems that are similar in nature to those noted, such as authorization codes incorrectly assigned, by following the suggestions in the flowchart. Print the appropriate database table to doublecheck configurations. Remember, too, to write down any error messages that have appeared in relation to a problem and relay them to the Technical Support Center (TSC). If the problem is caused by a peripheral system or device, consult the system or device documentation.

If the problem cannot be corrected, call the TSC at 1-800-442-6622 or call your authorized AT&T dealer. They will assist in isolating the problem by performing remote diagnostics. If it is necessary to replace a defective device or load a software maintenance diskette that corrects the problem, a technician will be dispatched, or assistance or exchange of the defective device will be arranged via the mail.

NOTE:

There is a service charge for TSC involvement and dispatched maintenance if the system is out of warranty, not leased, or not covered by a contract.

Basic Troubleshooting

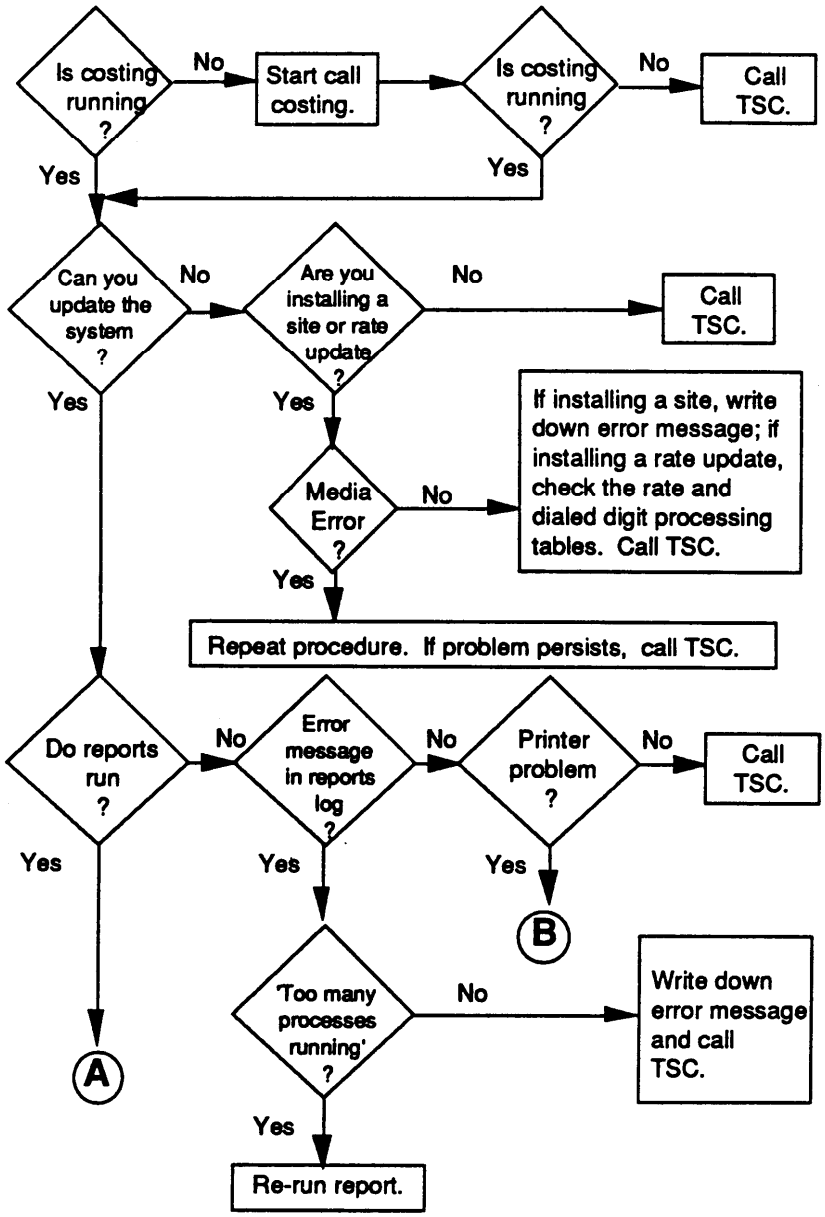

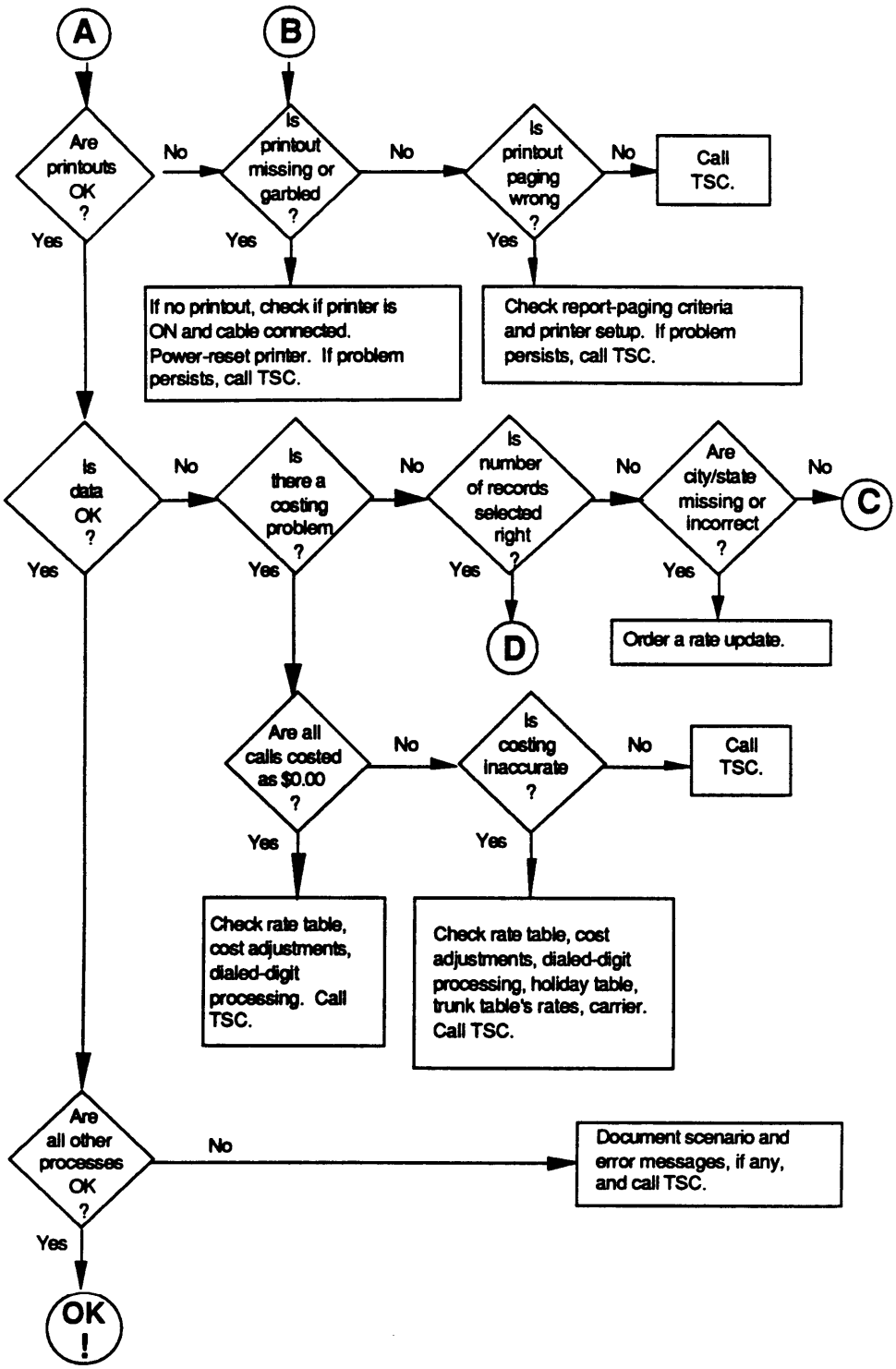
A
B
Are printouts OK ?
No
Yes
Is printout missing or garbled ?
No
Yes
Is printout paging wrong ?
No
Yes
Call TSC.
If no printout, check if printer is ON and cable connected. Power-reset printer. If problem persists, call TSC.
Check report-paging criteria and printer setup. If problem persists, call TSC.
Is data OK ?
No
Yes
Is there a costing problem ?
No
Yes
Is number of records selected right ?
No
Yes
Are city/state missing or incorrect ?
No
Yes
C
D
Order a rate update.
Are all calls costed as $0.00 ?
No
Yes
Is costing inaccurate ?
No
Yes
Call TSC.
Check rate table, cost adjustments, dialed-digit processing. Call TSC.
Check rate table, cost adjustments, dialed-digit processing, holiday table, trunk table's rates, carrier. Call TSC.
Are all other processes OK ?
No
Yes
Document scenario and error messages, if any, and call TSC.
OK !

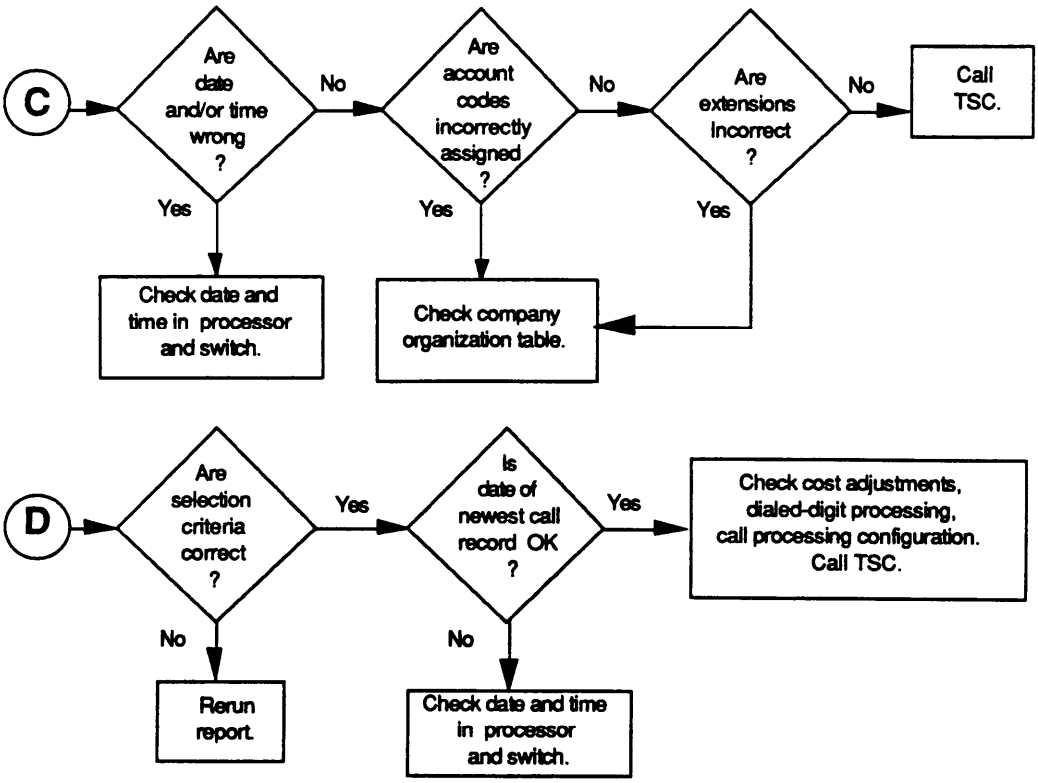
C
Are date and/or time wrong ?
No
Are account codes incorrectly assigned ?
No
Are extensions Incorrect ?
No
Call TSC.
Yes
Check date and time in processor and switch.
Yes
Check company organization table.
Yes
D
Are selection criteria correct ?
Yes
Is date of newest call record OK ?
Yes
Check cost adjustments, dialed-digit processing, call processing configuration. Call TSC.
No
Rerun report.
No
Check date and time in processor and switch.

Menu System

A

Reports Menu	Selection/Exception	
	Organization	
	Allocation	Detail
		Summary
	Account Code	Detail
		Summary
	Call Type	
	Facilities Group	
	Facility Usage	
	Call Distribution	
	Frequently Called Numbers	
	Generate All CDR Reports	
	Tables	Cost Centers
		Owners by Name
		Owners by Extension
		Unassigned Extensions
		Account Codes
		Charge Identifiers
		Services and Equipment
		Telephone System Config
		Dialed Digit Processing
		Call Type Adjustments
		Alarm Parameters
		Carrier Information
		Holidays
		Scheduled Reports
		Site Information
		System Information
	View/Print Reports on File	
	Schedule Reports	
	Custom Reports	

Call Rating	Telephone System Configuration	
	Dialed Digit Processing	
	Call Type Adjustments	
	Carrier Information	
	Holidays	
	Rate Tables	
	ISDN Markups	
	Tape Operations	Load CDRP/CSMDR Tape
		Halt Tape
		Edit Rating Configuration
		List Rating Configuration
		List Control Information
	Integrated Poller	Edit Configuration
		Poll Site
		List Activity
		Administer CDRU
	Rating and Discounting	Start Rating
		Stop Rating
		Schedule Volume Discounting
	Call Records	Edit Stored Call Records
		Schedule DCR Deletion

- Organization
  - Owners
    - Edit
    - Global Update
    - List by Name
    - List by Extension
  - Cost Centers
    - Edit
    - Global Update
    - List
  - Account Codes
    - Edit
    - List
  - Authorization Codes
  - Charge Identifiers
    - Edit
    - Global Update
    - List
  - Charge Records
    - Global Add
    - Global Delete
  - Charge Assignments
  - Services & Equipment
- Administration
  - Site Installation
  - Site Removal
  - Site Information
  - Add Sitegen
  - PBX Interfaces (Front Ends)
  - Software Updates & Modules
  - Reporting Period
  - Bulk Data Files
  - Security Levels
    - Edit
    - List
- System
  - Printer Configuration
  - Device Configuration
  - CDR Port Configuration
  - Call Record Collection
  - System Parameters
  - Alarm Parameters
  - Menu Color Settings
  - Multi-Site Summary
  - Invoke UNIX Shell
  - Restart Processes
  - Acknowledge Alarms
  - Log File
- Status
- Exit
  - Confirm

Menu Accessibility by Security Level

B

The following menu items are accessible by level 1 users:

- In the `Reports` menu:
  `Selection`
  `Organization`
  `Account Code`
  `Call Type`
  `Facilities Group`
  `Facility Usage`
  `Call Distribution`
  `View/Print Reports on File`

- In the `Call Rating` menu:
  `none`

- In the `Organization` menu:
  `none`

- In the `Administration` menu:
  `none`

- In the `System` menu:
  `Menu Color Settings`

In addition to all level 1 items, the following menu items are accessible by level 2 users:

- In the `Reports` menu:
  `Frequently Called Numbers`
  `Generate All CDR Reports`

- In the `Call Rating` menu:
  `none`

- In the `Organization` menu:

```
Owners
   Edit
   List by Name
   List by Extension

Cost Centers
   Edit
   List

Account Codes
   Edit
   List

Authorization Codes
Charge Identifiers
   Edit
   List

Charge Assignments
Services & Equipment
```

- In the `Administration` menu:

  none

- In the `System` menu:

  none

In addition to all level 2 items, the following menu items are accessible by level 3 users:

- In the `Reports` menu:

```
Allocation
   Detail
   Summary

Tables
   Cost Centers
   Owners by Name
   Owners by Extension
   Unassigned Extensions
   Account Codes
   Charge Identifiers
   Services and Equipment
   Telephone System Config
   Dialed Digit Processing
   Call Type Adjustments
   Alarm Parameters
   Carrier Information
   Holidays
   Scheduled Reports
   Site Information
   System Information

   Schedule Reports
```

```
Custom Reports
    Generate Report
    Run Test Case
```

- In the `Call Rating` menu:

```
Telephone System Config
Dialed Digit Processing
Call Type Adjustments
Carrier Information
Holidays
Rate Tables
ISDN Markups
Tape Operations
    Halt Tape
    Load Tape
    Edit Rating Configuration
    List Rating Configuration
    List Control Information

Integrated Poller
    Edit Configuration
    Poll Site
    List Activity
    Administer CDRU

Rating & Discounting
    Start Rating
    Stop Rating
    Schedule Volume Discounting

Call Records
    Edit Stored Call Records
```

- In the `Organization` menu:

  none

- In the `Administration` menu:

  none

- In the `System` menu:

```
Printer Configuration
Device Configuration
CDR Port Configuration
Call Record Collection
Alarm Parameters
Restart Processes
Log Files
```

In addition to all level 3 items, the following menu items are accessible by level 4 users:

- In the `Reports` menu:
  none

- In the `Call Rating` menu:
  `Call Records`
    `Schedule CDR Deletion`

- In the `Organization` menu:
  `Owners`
    `Global Update`

  `Cost Centers`
    `Global Update`

  `Charge Identifiers`
    `Global Update`

  `Charge Records`
    `Global Add`
    `Global Delete`

- In the `Administration` menu:
  `Site Installation`
  `Site Removal`
  `Site Information`
  `Add Sitegen`
  `PBX Interfaces (Frontends)`
  `Software Updates & Modules`
  `Reporting Period`
  `Bulk Data Files`
  `Security Levels`
    `Edit`
    `List`

- In the `System` menu:
  `System Parameters`
  `Multi-Site Summary`
  `Schedule Polling`
  `Polling Information`
  `Invoke UNIX Shell`

Report and Table Samples

C

This appendix includes samples of the following reports and tables:

- *Selection Detail Report*
- *Selection Summary Report*
- *Organization Detail Report*
- *Allocation Summary Report*
- *Account Code Detail Report*
- *Account Code Summary Report*
- *Call-Type Report*
- *Facilities Group Report*
- *Frequently Called Numbers Report*
- *Account Code Report*
- *Alarm Report*
- *Call Type Adjustments Table*
- *Carrier Report*
- *Cost Center Information*
- *Dialed-Digit Processing Table*
- *Holiday Report*
- *Owner by Extension Table*
- *Owner by Name Table*
- *Schedule Data Report*
- *Site Information*
- *System Report*
- *Telephone System Configuration*
- *Unassigned Extensions*

Selection Detail Report

Today: Jun 15 1992 1:33 PM
Company: MOSCOM

Page 1
Start Date: Mar 01 1992
End Date: Jun 12 1992

Selection Detail Report #1

Date	Time	Duration hh:mm:ss	Rate Center		Dialed Number	* Direction/Service Carrier Service	* DS	Call Type	Trunk	Exten	Site	Account Code		Cost ($)
03/01/92	11:25	0:02:00			301-395-0028	ATT	OV	WATS4	1004	408	CHEYENNE CUST-1	10	?	0.25
03/01/92	11:37	0:02:00	WAUNETA	NE	308-394-0040	ATT	OV	WATS4	1004	203	CHEYENNE CUST-1	3		0.23
03/01/92	11:49	0:02:00	MANSURA	LA	318-964-0052	ATT	OV	WATS4	1004	206	CHEYENNE CUST-1			0.25
03/01/92	23:01	0:01:00			207-653-0004	ATT	OV	WATS4	1004	203	CHEYENNE CUST-1		?	0.14
03/08/92	00:14	0:01:00	IRVING	TX	214-251-0017	FLAT	OV	WATS5	1005	302	CHEYENNE CUST-1	3		2.99
03/08/92	11:38	0:01:00	OSCO	IL	309-522-0041	FLAT	OV	WATS5	1005	204	CHEYENNE CUST-1			2.99
03/08/92	11:50	0:01:00	CEDAR RPDS	IA	319-378-0053	FLAT	OV	WATS5	1005	302	CHEYENNE CUST-1			2.99
03/08/92	23:02	0:01:00	SOPORTLAND	ME	207-792-0005	FLAT	OV	WATS5	1005	204	CHEYENNE CUST-1			2.99
03/15/92	00:16	0:01:00	ALLENTOWN	PA	215-770-0019	FLAT	OV	WATS6	1006	408	CHEYENNE CUST-1	10		0.33
03/15/92	11:28	0:01:00	COLUMBIA	MD	301-997-0031	FLAT	OV	WATS6	1006	203	CHEYENNE CUST-1			0.33
03/15/92	11:40	0:01:00	NAPERVILLE	IL	312-979-0043	FLAT	OV	WATS6	1006	206	CHEYENNE CUST-1			0.33
03/15/92	22:52	0:01:00	EPROVIDNCE	RI	401-431-0055	FLAT	OV	WATS6	1006	408	CHEYENNE CUST-1	10		0.33
03/15/92	23:04	0:01:00			207-852-0007	FLAT	OV	WATS6	1006	206	CHEYENNE CUST-1	3		0.33
03/22/92	00:06	0:01:00	GRACE	ID	208-425-0009	FLAT	OV	UNK.	1007	208	CHEYENNE CUST-1	3		0.05
03/22/92	11:42	0:01:00	STEELVILLE	MO	314-775-0045	FLAT	OV	UNK.	1007	208	CHEYENNE CUST-1	100		0.05
03/22/92	22:54	0:01:00	LINCOLN	NE	402-470-0057	FLAT	OV	UNK.	1007	202	CHEYENNE CUST-1	3		0.05
03/22/92	23:06	0:01:00	GRACE	ID	208-425-0009	FLAT	OV	UNK.	1007	208	CHEYENNE CUST-1			0.05
03/29/92	00:18	0:01:00	CLEVELAND	OH	216-822-0021	FLAT	OV	UNK.	1007	202	CHEYENNE CUST-1			0.05
03/29/92	11:33	0:01:00	BLUEFIELD	WV	304-325-0036	ATT	OV	OS-OL	1111	208	CHEYENNE CUST-1			0.25
03/29/92	11:45	0:01:00	WICHITA	KS	316-261-0048	ATT	OV	OS-OL	1111	202	CHEYENNE CUST-1	3		0.23
03/29/92	23:09	0:01:00	FRESNO	CA	209-221-0012	ATT	OV	OS-OL	1111	202	CHEYENNE CUST-1	100		0.14
04/05/92	00:09	0:01:00	FRESNO	CA	209-221-0012	ATT	OV	OS-OL	1111	202	CHEYENNE CUST-1	3		0.14
04/05/92	11:27	0:01:00	ASHTON	MD	301-421-0030	FLAT	OV	WATS5	1115	202	CHEYENNE CUST-1	3		1.99
04/05/92	22:51	0:01:00			319-958-0054	FLAT	OV	WATS5	1115	208	CHEYENNE CUST-1	123456789012345		1.99
04/12/92	00:15	0:01:00	COOPERSBG	PA	215-282-0018	FLAT	OV	WATS5	1115	208	CHEYENNE CUST-1			1.99
04/12/92	11:29	0:01:00	REHOBOTH	DE	302-227-0032	ATT	OV	WATS6	1116	204	CHEYENNE CUST-1	123456789012345		0.25
04/12/92	11:41	0:01:00	ROSEVILLE	MI	313-776-0044	ATT	OV	WATS6	1116	302	CHEYENNE CUST-1			0.00
04/19/92	00:05	0:01:00	SEATTLE	WA	206-762-0008	ATT	OV	WATS6	1116	302	CHEYENNE CUST-1	100		0.14
04/19/92	23:05	0:01:00	SEATTLE	WA	206-762-0008	ATT	OV	WATS6	1116	302	CHEYENNE CUST-1			0.14
05/17/92	00:07	0:01:00	BOISE	ID	208-375-0010	FLAT	OV	UNK.	80	408	CHEYENNE CUST-1	123456789012345		0.30
05/17/92	00:23	0:01:00	DULUTH	MN	218-624-0026	ATT	OV	OS-OL	2	302	CHEYENNE CUST-1	3		0.14
05/17/92	23:07	0:01:00	BOISE	ID	208-375-0010	FLAT	OV	UNK.	80	408	CHEYENNE CUST-1			0.30
05/20/92	00:19	0:01:00	WARREN	OH	216-824-0022	FLAT	OV	UNK.	80	203	CHEYENNE CUST-1	3		0.30
05/20/92	00:20	0:01:00	MATTOON	IL	217-234-0023	FLAT	OV	UNK.	90	204	CHEYENNE CUST-1	123456789012345		0.40
05/20/92	00:24	0:01:00	ROCHESTER	IN	219-223-0027	FLAT	OV	UNK.	3	208	CHEYENNE CUST-1			1.00
05/20/92	11:31	0:01:00			303-632-0034	FLAT	OV	UNK.	80	206	CHEYENNE CUST-1			0.30
05/20/92	11:32	0:01:00	COWEN	WV	304-226-0035	FLAT	OV	UNK.	90	302	CHEYENNE CUST-1	10		0.40
05/20/92	11:34	0:01:00	OAKVALE	WV	304-898-0037	ATT	OV	OS-OL	?1	408	CHEYENNE CUST-1	123456789012345		0.25
05/20/92	11:36	0:01:00	CHEYENNE	WY	307-632-0039	FLAT	OV	UNK.	3	202	CHEYENNE CUST-1	100		1.00
05/20/92	11:43	0:01:00	FLORISSANT	MO	314-839-0046	FLAT	OV	UNK.	80	408	CHEYENNE CUST-1	10		0.30
05/20/92	11:46	0:01:00	CUTLER	IN	317-268-0049	ATT	OV	OS-OL	?1	203	CHEYENNE CUST-1			0.25
05/20/92	11:47	0:01:00			317-952-0050	ATT	OV	OS-OL	2	204	CHEYENNE CUST-1	123456789012345	?	0.25
05/20/92	22:55	0:01:00	ATLANTA	GA	404-221-0058	FLAT	OV	UNK.	80	203	CHEYENNE CUST-1			0.30
05/20/92	22:56	0:01:00	OKLA CITY	OK	405-231-0059	FLAT	OV	UNK.	90	204	CHEYENNE CUST-1	100		0.40
05/20/92	22:58	0:01:00	GREATFALLS	MT	406-866-0061	ATT	OV	OS-OL	?1	206	CHEYENNE CUST-1	123456789012345		0.21
05/20/92	22:59	0:01:00	MONTEREY	CA	408-372-0062	ATT	OV	OS-OL	2	302	CHEYENNE CUST-1			0.15
05/20/92	23:00	0:01:00			203-594-0003	FLAT	OV	UNK.	3	202	CHEYENNE CUST-1	10		1.00
05/21/92	00:10	0:01:00	STOCKTON	CA	209-462-0013	ATT	OV	OS-OL	?1	203	CHEYENNE CUST-1			0.14

Selection Summary Report

```
  Today:  Jun 15 1992 1:35 PM                                          Page      1
Company:  MOSCOM                                                 Start Date: Mar 01 1992
                                                                   End Date: Jun 12 1992

                           Selection Summary Report #1
-------------------------------------------------------------------------------

                              Duration            Cost
                              hh:mm:ss            ($)
                              --------       -----------

                               1:50:00             30.51

Records  Selected         = 61

Records in Database       = 77

End of Selection Summary Report...
```

Organization Detail Report

Today: Jun 15 1992 1:44 PM
Company: MOSCOM

Page 1
Start Date: Mar 1 1992
End Date: Jun 12 1992

Organization Detail Report #1

REGION	SECTOR	DIVISION	DIVISION	DIVISION
REGION 1	SECTOR 1A	SYS-ENGINEER	NEW-PRODUCTS	GROUP 11

ORGANIZATION LEVEL TOTALS
DURATION: 0:00:00 TOTAL CALLS: 0 COST: 0.00

REGION	SECTOR	DIVISION	DIVISION	DIVISION
REGION 1	SECTOR 1A	SYS-ENGINEER	NEW-PRODUCTS	GROUP 2

Cost Center: CENTER B

Owner: AKERS, JOHN Site: CHEYENNE CUST-1 Location: LOC2 Room: ROOM2

Extension: 202

Date	Time	Duration hh:mm:ss	Rate Center	Dialed Number	* Direction/Service Carrier Service	* DS	Call Type	Trunk	Exten	Site	Account Code	Cost
03/22/92	22:54	0:01:00	LINCOLN NE	402-470-0057	FLAT	OV	UNK.	1007	202	CHEYENNE CUST-1	3	0.05
03/29/92	00:18	0:01:00	CLEVELAND OH	216-822-0021	FLAT	OV	UNK.	1007	202	CHEYENNE CUST-1		0.05
03/29/92	11:45	0:01:00	WICHITA KS	316-261-0048	ATT	OV	OS-OL	1111	202	CHEYENNE CUST-1	3	0.23
03/29/92	23:09	0:01:00	FRESNO CA	209-221-0012	ATT	OV	OS-OL	1111	202	CHEYENNE CUST-1	100	0.14
04/05/92	00:09	0:01:00	FRESNO CA	209-221-0012	ATT	OV	OS-OL	1111	202	CHEYENNE CUST-1	3	0.14
04/05/92	11:27	0:01:00	ASHTON MD	301-421-0030	FLAT	OV	WATS5	1115	202	CHEYENNE CUST-1	3	1.99
05/20/92	11:36	0:01:00	CHEYENNE WY	307-632-0039	FLAT	OV	UNK.	3	202	CHEYENNE CUST-1	100	1.00
05/20/92	23:00	0:01:00		203-594-0003	FLAT	OV	UNK.	3	202	CHEYENNE CUST-1	10	1.00
		0:08:00	Detail Subtotal		8							4.60
		0:00:00	Other Excluded Calls		0							0.00
			Tax									0.00
SUBTOTAL		0:08:00		TOTAL CALLS:	8							4.60

OWNER TOTALS
DURATION: 0:08:00 TOTAL CALLS: 8 COST: 4.60

Allocation Detail Report

```
  Today: Jun 15 1992  1:45 PM                                                                                    Page      1
Company: MOSCOM                                                                                       Start Date: May  1 1992
                                                                                                        End Date: May 31 1992

                                                   Allocation Detail Report #1
-----------------------------------------------------------------------------------------------------------------------------------
REGION           SECTOR           DIVISION         DIVISION         DIVISION
---------------  ---------------  ---------------  ---------------  -------------
REGION 1         SECTOR 1A        SYS-ENGINEER     NEW-PRODUCTS     GROUP 2

Cost Center:  CENTER B

Owner:  ARMSTRONG-JONES, ANTONY         Site:  CHEYENNE CUST-1  Location:  LOC2                  Room:  ROOM2

Extension:  7203
                                                   * Direction/Service
                Duration                          Carrier  *    Call
  Date    Time hh:mm:ss   Rate Center  Dialed Number  Service DS    Type   Trunk Exten       Site       Account Code       Cost
-------- ----- -------- ------------- -------------- -------- -- ------- ------- ----- --------------- ---------------- -----------
NO CALLS LISTED
OWNER TOTALS
DURATION:   0:00:00    TOTAL CALLS:      0    COST:        0.00


REGION           SECTOR           DIVISION         DIVISION         DIVISION
---------------  ---------------  ---------------  ---------------  -------------
REGION 1         SECTOR 1A        SYS-ENGINEER     NEW-PRODUCTS     GROUP 2

Cost Center:  CENTER B

Owner:  AVERY, MILTON                   Site:  CHEYENNE CUST-1  Location:  LOC2                  Room:  ROOM2

Extension:  208
                                                   * Direction/Service
                Duration                          Carrier  *    Call
  Date    Time hh:mm:ss   Rate Center  Dialed Number  Service DS    Type   Trunk Exten       Site       Account Code       Cost
-------- ----- -------- ------------- -------------- -------- -- ------- ------- ----- --------------- ---------------- -----------
05/20/92 00:24  0:01:00 ROCHESTER  IN 219-223-0027      FLAT OV    UNK.           208 CHEYENNE CUST-1                       1.00
05/29/92 00:06  0:01:00 GRACE      ID 208-425-0009      ATT  OV   OS-OL           208 CHEYENNE CUST-1 3                     0.13

                0:02:00 Detail Subtotal                  2                                                                  1.13
                0:00:00 Other Excluded Calls             0                                                                  0.00
                        Tax                                                                                                 0.00
               --------                                                                                                 -----------
SUBTOTAL        0:02:00                 TOTAL CALLS:     2                                                                  1.13


OWNER TOTALS
DURATION:   0:02:00    TOTAL CALLS:      2    COST:        1.13
```

Allocation Summary Report

Today: Jun 24 1992 10:51 AM
Company: MOSCOM

Page 1
Start Date: Jan 1 1970
End Date: Jan 19 2038

Allocation Summary Report #1

REGION	SECTOR	DIVISION	DIVISION	DIVISION
All	All	All	All	All

REGION	Calls	Duration hh:mm:ss	Cost	Tax	Total Cost
CENTER A6	0	0:00:00	0.00	0.00	0.00
REGION 1	28	0:55:00	8.38	0.00	8.38
REGION 2	0	0:00:00	0.00	0.00	0.00
REGION NONAME	0	0:00:00	0.00	0.00	0.00
REGION_TO_MAX	2	0:20:00	0.00	0.00	0.00
CURRENT TOTALS	30	1:15:00	8.38	0.00	8.38
YEAR-TO-DATE TOTALS	30	1:15:00	8.38	0.00	8.38

Account Code Detail Report

```
   Today:  Jun 15 1992 1:46 PM
Company:  MOSCOM
   Site:  CHEYENNE CUST-1

                                              Account Code Detail Report #1
- - - - - - - - - - - - - - - - - - - - - - - - - - - - - - - - - - - - - - - - - - - - - - -

Account Code: 100
Account Name: IBM
```

Date	Time	Duration hh:mm:ss	Exten	Rate Center	Dialed Number	Carrier Service	DS	* D
05/17/92	00:12	0:01:00	710	W ANGELES CA	213-470-0015	FLAT	OV	
05/20/92	11:36	0:01:00	202	CHEYENNE WY	307-632-0039	FLAT	OV	
05/20/92	11:48	0:01:00	710	SHREVEPORT LA	318-861-0051	FLAT	OV	
05/20/92	22:56	0:01:00	204	OKLA CITY OK	405-231-0059	FLAT	OV	
05/29/92	00:15	0:01:00	302	SEATTLE WA	206-762-0008	ATT	OV	
TOTALS :		0:05:00		TOTAL CALLS:	5			

Account Code Summary Report

```
  Today:  Jun 15 1992 1:47 PM                                Page      1
Company:  MOSCOM                                  Start Date:  May 1 1992
   Site:  CHEYENNE  CUST-1                          End Date:  May 31 1992

                  Account  Code  Summary  Report  #1
-----------------------------------------------------------------------

                                                     Duration     Cost
 Account   Code            Name        Number  hh:mm:ss      ($)
------------------- --------------------  -------- ----------- ----------
0                   UNASSIGNED                 0    0:00:00       0.00
100                 IBM                        5    0:05:00       3.54
10*                 DEC                        0    0:00:00       0.00
10                  COMPANY_D                  5    0:05:00       2.50
11                  COMPANY_G                  0    0:00:00       0.00
1234567890123456    COMPANY  H                 0    0:00:00       0.00
123456789012345     COMPANY  J                 8    0:08:00       2.25
12                  COMPANY_110                0    0:00:00       0.00
13                  COMPANY_1                  0    0:00:00       0.00
14                  COMPANY_2                  0    0:00:00       0.00
1                   XEROX                      0    0:00:00       0.00
222#                SUN                        0    0:00:00       0.00
2                   KODAK                      0    0:00:00       0.00
3                   COMPANY  A                 3    0:03:00       0.57
4                   COMPANY_E                  0    0:00:00       0.00
5                   COMPANY  C                 0    0:00:00       0.00
6                   COMPANY_F                  0    0:00:00       0.00
7                   COMPANY_11                 0    0:00:00       0.00
8                   COMPANY_22                 0    0:00:00       0.00
9                   COMPANY_B                  0    0:00:00       0.00
---------------- -------------------- ------ ----------- --------
ORGANIZATION  TOTALS:                         21    0:21:00       8.86

End  of  Account  Code  Summary  Report...
```

Call-Type Report

Today: Jun 15 1992 1:41 PM
Company: MOSCOM
Site: CHEYENNE CUST-1

Page 1
Start Date: Mar 1 1992
End Date: Jun 12 1992

Call Type Report #1

Call Type	Number	Duration hh:mm:ss	Cost ($)	Cost/Min ($)
CCSA	0	0:00:00	0.00	0.00
DILIT	0	0:00:00	0.00	0.00
FX	0	0:00:00	0.00	0.00
FX-CH	0	0:00:00	0.00	0.00
IDDD	0	0:00:00	0.00	0.00
INCOM	6	1:00:00	0.00	0.00
IS-IL	0	0:00:00	0.00	0.00
IS-OL	0	0:00:00	0.00	0.00
IWATS	0	0:00:00	0.00	0.00
IWTS0	0	0:00:00	0.00	0.00
IWTS1	0	0:00:00	0.00	0.00
IWTS2	0	0:00:00	0.00	0.00
IWTS3	0	0:00:00	0.00	0.00
IWTS4	0	0:00:00	0.00	0.00
IWTS5	0	0:00:00	0.00	0.00
IWTS6	0	0:00:00	0.00	0.00
LATA	0	0:00:00	0.00	0.00
LOCAL	1	0:01:00	0.00	0.00
MAT-N	0	0:00:00	0.00	0.00
MAT-O	0	0:00:00	0.00	0.00
MOB-N	0	0:00:00	0.00	0.00
MOB-O	0	0:00:00	0.00	0.00
MSNGR	0	0:00:00	0.00	0.00
MTS	0	0:00:00	0.00	0.00
MTS-I	0	0:00:00	0.00	0.00
MTS-M	0	0:00:00	0.00	0.00
MTS-N	0	0:00:00	0.00	0.00
MTS-O	0	0:00:00	0.00	0.00
MTS-R	0	0:00:00	0.00	0.00
NDC-N	0	0:00:00	0.00	0.00
NDC-O	0	0:00:00	0.00	0.00
OS-IL	0	0:00:00	0.00	0.00
OS-OL	18	0:18:00	3.06	0.17
PICPH	0	0:00:00	0.00	0.00
RADIO	0	0:00:00	0.00	0.00
SPCL	0	0:00:00	0.00	0.00
SPRAD	0	0:00:00	0.00	0.00
TELGR	0	0:00:00	0.00	0.00
TIE	0	0:00:00	0.00	0.00
TIE8	0	0:00:00	0.00	0.00
TIE9	0	0:00:00	0.00	0.00
VERFY	0	0:00:00	0.00	0.00
WATS0	0	0:00:00	0.00	0.00
WATS1	0	0:00:00	0.00	0.00
WATS2	0	0:00:00	0.00	0.00
WATS3	0	0:00:00	0.00	0.00
WATS4	5	0:09:00	1.01	0.11
WATS 5	10	0:10:00	24.90	2.49

Facilities Group Report

Today: Jun 15 1992 1:47 PM
Company: MOSCOM
Site: CHEYENNE CUST-1

Page 1
Start Date: May 1 1992
End Date: May 31 1992

Facilities Group Report #1

Trunk Group: 1 FACILITY: CO

Trunk	NUMBER Total	NUMBER Incom	NUMBER Tandem	DURATION Total (hh:mm)	DURATION Average (hh:mm)	COST Total	COST /Call	COST /Min
10	0	0	0	0:00	0:00	0.00	0.00	0.00
11	1	1	0	0:10	0:10	0.00	0.00	0.00
12	1	1	0	0:10	0:10	0.00	0.00	0.00
13	1	1	0	0:10	0:10	0.00	0.00	0.00
14	1	1	0	0:10	0:10	0.00	0.00	0.00
15	1	1	0	0:10	0:10	0.00	0.00	0.00
16	0	0	0	0:00	0:00	0.00	0.00	0.00
17	0	0	0	0:00	0:00	0.00	0.00	0.00
18	0	0	0	0:00	0:00	0.00	0.00	0.00
19	0	0	0	0:00	0:00	0.00	0.00	0.00
TOTALS:	5	5	0	0:50	0:10	0.00	0.00	0.00

Trunk Group: 11 FACILITY: CO

Trunk	NUMBER Total	NUMBER Incom	NUMBER Tandem	DURATION Total hh:mm	DURATION Average hh:mm	COST Total	COST /Call	COST /Min
1111	0	0	0	0:00	0:00	0.00	0.00	0.00
TOTALS:	0	0	0	0:00	0:00	0.00	0.00	0.00

Trunk Group: 12 FACILITY: CO

Trunk	NUMBER Total	NUMBER Incom	NUMBER Tandem	DURATION Total (hh:mm)	DURATION Average (hh:mm)	COST Total	COST /Call	COST /Min
1001	0	0	0	0:00	0:00	0.00	0.00	0.00
121	0	0	0	0:00	0:00	0.00	0.00	0.00
322	0	0	0	0:00	0:00	0.00	0.00	0.00
323	0	0	0	0:00	0:00	0.00	0.00	0.00
TOTALS:	0	0	0	0:00	0:00	0.00	0.00	0.00

Trunk Group: 13 FACILITY: CO

Trunk	NUMBER Total	NUMBER Incom	NUMBER Tandem	DURATION Total (hh:mm)	DURATION Average (hh:mm)	COST Total	COST /Call	COST /Min
1330	0	0	0	0:00	0:00	0.00	0.00	0.00
1340	0	0	0	0:00	0:00	0.00	0.00	0.00
1350	0	0	0	0:00	0:00	0.00	0.00	0.00

Frequently Called Numbers Report

```
  Today:  Jun 15 1992 1:48 PM                          Page       1
Company:  MOSCOM                              Start Date: May  1 1992
   Site:  CHEYENNE CUST-1                       End Date: May 31 1992

              Frequently Called Numbers Report #1
-----------------------------------------------------------------------

                                          Duration
Number  Dialed Number   Rate Center    hh:mm:ss        Cost
------- -------------- ------------- ------------  ------------
     2 208-375-0010    BOISE      ID     0:02:00          0.60
     2  206-762-0008   SEATTLE   WA     0:02:00          0.28
     2  208-664-0011   COERDALENE ID     0:02:00          0.80

End of Frequently Called Numbers Report...
```

Account Code Table

```
  Today :  Jun 15 1992 01:51 PM                                          Page   1
Company:  MOSCOM
   Site:  CHEYENNE  CUST-1

                                ACCOUNT  CODE  TABLE
-------------------------------------------------------------------------------------

             Account  Code                    Account  Code  Name
            ----------------                 -----------------------

            12                               COMPANY_110
            8                                COMPANY_22
            14                               COMPANY_2
            7                                COMPANY_11
            13                               COMPANY_1
            11                               COMPANY_G
            6                                COMPANY_F
            4                                COMPANY_E
            10                               COMPANY_D
            5                                COMPANY  C
            9                                COMPANY_B
            3                                COMPANY  A
            222#                             SUN
            10*                              DEC
            100                              IBM
            2                                KODAK
            1                                XEROX
            1234567890123456                 COMPANY  H
            123456789012345                  COMPANY  J
            0                                UNASSIGNED


End  of  Account  Code  Table...
```

Alarm Report

```
  Today: Jun 15 1992 01:53 PM                                          Page   1
Company: MOSCOM

                                   ALARM REPORT
-------------------------------------------------------------------------------

Watch Port:                            Port:

------------------------------- Phone #1 ----------------------------------------
Primary                                Secondary

Message: NO PREVIOUS MESSAGES

------------------------------- Phone #2 ----------------------------------------
Primary                                Secondary

Message: NO PREVIOUS MESSAGES



End of Alarm Report...
```

Call Type Adjustments Table

Today: Jun 15 1992 01:52 PM Page 1
Company: MOSCOM
Site: CHEYENNE CUST-1

CALL TYPE ADJUSTMENTS TABLE

Call Type	TAX EXEMPTION STATUS Fed	St	Cty	Oth	Markup	Surcharge	Minimum Charge	Minimum Duration	Network Correction
CCSA	no	no	no	no	0.0%	$.00	$.00	0:00:30	0:00:15
DILIT	no	no	no	no	0.0%	$.00	$.00	0:00:30	0:00:15
FX	no	no	no	no	0.0%	$.00	$.00	0:00:30	0:00:15
FX-CH	no	no	no	no	-10%	$.00	$.00	0:00:30	0:00:15
IDDD	no	no	no	no	0.0%	$.00	$.00	0:00:30	0:00:15
INCOM	no	no	no	no	0.0%	$.00	$.00	0:00:00	0:00:00
IS-IL	no	no	no	no	0.0%	$.00	$.00	0:00:30	0:00:15
IS-OL	no	no	no	no	0.0%	$.00	$.00	0:00:30	0:00:15
IWATS	no	no	no	no	-10%	$.00	$.00	0:00:30	0:00:15
IWTS0	no	no	no	no	0.0%	$.00	$.00	0:00:30	0:00:15
IWTS1	no	no	no	no	0.0%	$.00	$.00	0:00:30	0:00:15
IWTS2	no	no	no	no	0.0%	$.00	$.00	0:00:30	0:00:15
IWTS3	no	no	no	no	0.0%	$.00	$.00	0:00:30	0:00:15
IWTS4	no	no	no	no	0.0%	$.00	$.00	0:00:30	0:00:15
IWTS5	no	no	no	no	0.0%	$.00	$.00	0:00:30	0:00:15
IWTS6	no	no	no	no	0.0%	$.00	$.00	0:00:30	0:00:15
LATA	no	no	no	no	0.0%	$.00	$.00	0:00:30	0:00:15
LOCAL	no	no	no	no	0.0%	$.00	$.00	0:00:30	0:00:15
MAT-N	no	no	no	no	0.0%	$.00	$.00	0:00:30	0:00:15
MAT-O	no	no	no	no	0.0%	$.00	$.00	0:00:30	0:00:15
MOB-N	no	no	no	no	0.0%	$.00	$.00	0:00:30	0:00:15
MOB-O	no	no	no	no	0.0%	$.00	$.00	0:00:30	0:00:15
MSNGR	no	no	no	no	0.0%	$.00	$.00	0:00:30	0:00:15
MTS	no	no	no	no	0.0%	$.00	$.00	0:00:30	0:00:15
MTS-I	no	no	no	no	0.0%	$.00	$.00	0:00:30	0:00:15
MTS-M	no	no	no	no	0.0%	$.00	$.00	0:00:30	0:00:15
MTS-N	no	no	no	no	0.0%	$.00	$.00	0:00:30	0:00:15
MTS-O	no	no	no	no	0.0%	$.00	$.00	0:00:30	0:00:15
MTS-R	no	no	no	no	0.0%	$.00	$.00	0:00:30	0:00:15
NDC-N	no	no	no	no	0.0%	$.00	$.00	0:00:30	0:00:15
NDC-O	no	no	no	no	0.0%	$.00	$.00	0:00:30	0:00:15
OS-IL	no	no	no	no	0.0%	$.00	$.00	0:00:30	0:00:15
OS-OL	no	no	no	no	0.0%	$.00	$.00	0:00:30	0:00:15
PICPH	no	no	no	no	0.0%	$.00	$.00	0:00:30	0:00:15
RADIO	no	no	no	no	0.0%	$.00	$.00	0:00:30	0:00:15
SPCL	no	no	no	no	0.0%	$.00	$.00	0:00:30	0:00:15
SPRAD	no	no	no	no	0.0%	$.00	$.00	0:00:30	0:00:15
TELGR	no	no	no	no	0.0%	$.00	$.00	0:00:30	0:00:15
TIE	no	no	no	no	0.0%	$.00	$.00	0:00:30	0:00:15
TIE8	no	no	no	no	-10%	$.00	$.00	0:00:30	0:00:15
TIE9	no	no	no	no	-10%	$.00	$.00	0:00:30	0:00:15
VERFY	no	no	no	no	0.0%	$.00	$.00	0:00:30	0:00:15
WATS0	no	no	no	no	0.0%	$.00	$.00	0:00:30	0:00:15
WATS1	no	no	no	no	0.0%	$.00	$.00	0:00:30	0:00:15
WATS2	no	no	no	no	0.0%	$.00	$.00	0:00:30	0:00:15
WATS3	no	no	no	no	0.0%	$.00	$.00	0:00:30	0:00:15
WATS4	no	no	no	no	0.0%	$.00	$.00	0:00:30	0:00:15
WATS5	no	no	no	no	0.0%	$.00	$.00	0:00:30	0:00:15
WATS6	no	no	no	no	0.0%	$.00	$.00	0:00:30	0:00:15
ZERO+	no	no	no	no	-10%	$.00	$.00	0:00:30	0:00:15

Carrier Report

```
  Today: Jun 15 1992 01:53 PM                                          Page   1
Company: MOSCOM
   Site: CHEYENNE CUST-1

                                  CARRIER REPORT
-------------------------------------------------------------------------------

                    Carrier Number:
                      Carrier Name: FLAT
           Carrier Dialing Prefix:
Number of Digits in Non-Equal
       Access Authorization Code:
                     Rating Method: M
                      Carrier Rate: $000.00
  Rate Source Area Code/Exchange:    /
 ISDN Interexchange Carrier Code:
 ISDN Network Service Field Code:
          ISDN Carrier Direction:
 Order Number and Date Installed:            01/01/70
Update Number and Date Installed:            01/01/70

                   Carrier Number: 1
                      Carrier Name: ATT
           Carrier Dialing Prefix: 10288
Number of Digits in Non-Equal
       Access Authorization Code:
                     Rating Method: T
                      Carrier Rate: $000.00
  Rate Source Area Code/Exchange: 307/875
 ISDN Interexchange Carrier Code: 288
 ISDN Network Service Field Code: 00
          ISDN Carrier Direction: 0
 Order Number and Date Installed: M91001-001 08/23/92
Update Number and Date Installed: M91001-001 08/23/92

                   Carrier Number: 2
                      Carrier Name: MCI
           Carrier Dialing Prefix: 10222
Number of Digits in Non-Equal
       Access Authorization Code:
                     Rating Method: T
                      Carrier Rate: $000.00
  Rate Source Area Code/Exchange: 307/875
 ISDN Interexchange Carrier Code: 222
 ISDN Network Service Field Code: 00
          ISDN Carrier Direction: 0
 Order Number and Date Installed: M91001-001 08/23/92
Update Number and Date Installed: M91001-001 08/23/92
```

Cost Center Information

Today : Jun 15 1992 01:48 PM Page 1
Company: MOSCOM

COST CENTER INFORMATION

REGION	SECTOR	DIVISION	DIVISION	DIVISION
REGION 1	SECTOR 1A	SYS-ENGINEER	NEW-PRODUCTS	GROUP 1

Cost Center	Equip. Markup	Serv. Markup	Call Markup	--- TAX EXEMPTION STATUS --- Federal	State	County	Other
CENTER A	0.0%	0.0%	0.0%	yes	yes	yes	yes

REGION 1	SECTOR 1A	SYS-ENGINEER	NEW-PRODUCTS	GROUP 11

Cost Center	Equip. Markup	Serv. Markup	Call Markup	--- TAX EXEMPTION STATUS --- Federal	State	County	Other
CENTER 1A	0.0%	0.0%	0.0%	yes	no	yes	no

REGION 1	SECTOR 1A	SYS-ENGINEER	NEW-PRODUCTS	GROUP 2

Cost Center	Equip. Markup	Serv. Markup	Call Markup	--- TAX EXEMPTION STATUS --- Federal	State	County	Other
CENTER B	0.0%	0.0%	0.0%	no	no	no	no

REGION 1	SECTOR 2A	SALES	NEW-SALES	GROUP 1

Cost Center	Equip. Markup	Serv. Markup	Call Markup	--- TAX EXEMPTION STATUS --- Federal	State	County	Other
CENTER A2	0.0%	0.0%	-10.0%	yes	yes	yes	yes

REGION 1	SECTOR 1A	SYS-ENGINEER	TESTING	GROUP 1

Cost Center	Equip. Markup	Serv. Markup	Call Markup	--- TAX EXEMPTION STATUS --- Federal	State	County	Other
CENTER A3	0.0%	0.0%	99.9%	yes	yes	yes	yes

REGION 1	SECTOR 1A	SYS-ENGINEER	DEVELOPMENT	GROUP C

Cost Center	Equip. Markup	Serv. Markup	Call Markup	--- TAX EXEMPTION STATUS --- Federal	State	County	Other
COST 4	0.0%	0.0%	0.0%	yes	yes	yes	yes
COST 3	0.0%	0.0%	0.0%	no	no	no	yes
COST 33	0.0%	0.0%	0.0%	yes	yes	yes	yes

Dialed-Digit Processing Table

Today: Jun 15 1992 01:52 PM
Company: MOSCOM
Site: CHEYENNE CUST-1

Page 1

DIALED DIGIT PROCESSING TABLE

Search For: Cost As:

Dialed Digits	Trunk Group	*Direction * D	Cost Method	Rate	Trunk Group	Dialed Digits	Call Type	Substitute Digits?
0%		O	trunk	$.00			ZERO+	no
011????????%		O	trunk	$.00				no
102220%		O	trunk	$.00	9999	0%	ZERO+	yes
10222011%		O	trunk	$.00	9999	011%		yes
10????0%		O	trunk	$.00			ZERO+	no
10???01l%		O	trunk	$.00				no
1800???????%		O	call	$.00			SPCL	no
1900???????%		O	minute	$.50			SPCL	no
411		O	call	$.50			SPCL	no
5551212		O	call	$.50			SPCL	no
800????????%		O	call	$.00			SPCL	no
900????????%		O	minute	$.50			SPCL	no
911		O	call	$.00			SPCL	no
976????		O	minute	$.50			SPCL	no
?		O	discard	$.00				no
?11		O	call	$.00			SPCL	no
?411		O	call	$.50			SPCL	no
?5551212		O	call	$.50			SPCL	no
??		O	discard	$.00				no
???		O	discard	$.00				no
???5551212		O	call	$.65			SPCL	no
????		O	discard	$.00				no
????5551212		O	call	$.65			SPCL	no
?????		O	discard	$.00				no
??????		O	discard	$.00				no

End of Dialed Digit Processing Table...

Holiday Report

```
  Today:  Jun 15 1992 01:54 PM                                          Page   1
Company:  MOSCOM

                                   HOLIDAY REPORT
--------------------------------------------------------------------------------

                                   Holiday Dates

                                     01/01/90
                                     01/15/90
                                     02/19/90
                                     05/28/90
                                     07/04/90
                                     09/03/90
                                     10/08/90
                                     11/11/90
                                     11/22/90
                                     12/25/90
                                     01/01/91
                                     01/21/91
                                     02/18/91
                                     05/27/91
                                     07/04/91
                                     09/02/91
                                     10/14/91
                                     11/11/91
                                     11/28/91
                                     12/25/91
                                     01/01/92
                                     01/20/92
                                     02/17/92
                                     05/25/92
                                     07/04/92
                                     09/07/92
                                     10/12/92
                                     11/11/92
                                     11/26/92
                                     12/25/92
                                     01/01/93
                                     01/18/93
                                     02/15/93
                                     05/31/93
                                     07/04/93
                                     09/06/93
                                     10/11/93
                                     11/11/93
                                     12/25/93
                                     01/01/94
                                     01/17/94
                                     05/30/94
                                     07/04/94
                                     09/05/94
                                     10/10/94
                                     11/11/94
                                     12/25/94
                                     01/16/95
                                     05/29/95
                                     07/04/95
                                     09/04/95
                                     10/09/95
                                     11/23/95
```

Owners by Extension Table

Today: Jun 15 1992 01:50 PM Page 1
Company: MOSCOM
Site: CHEYENNE CUST-1

OWNERS BY EXTENSION TABLE

* - Privacy Option Flag: N, P Or S

Exten	Cost Center	Location	Room	*	Owner
755	CENTER A6	FIXA	FIXB	N	FILL, TWO
751	CENTER A6	FIXA	FIXB	N	FILL, ONE
1255	CENTER 1A	LOC3	ROOM3	N	MULTIAUTH, JOE
1254	CENTER 1A	LOC22	ROOMB	N	MULTIAUTH, JOE
1253	CENTER 1A	LOC11	ROOMA	N	MULTIAUTH, JOE
1252	CENTER 1A	LOC2	ROOM2	N	MULTIAUTH, JOE
125	CENTER 1A	LOC1	ROOM1	N	MULTIAUTH, JOE
209	CENTER B	LOC1	ROOM1	N	BOXER, ROBERT G.
113	CENTER A	LOC1	ROOM1	N	BOXER, ROBERT G.
102	COST CENTER M	LOC1	ROOM1	N	BOXER, ROBERT G.
100	COST CENTER M	LOC1	ROOM1	N	AYERS, SCOTT
208	CENTER B	LOC2	ROOM2	N	AVERY, MILTON
207	CENTER B	LOC2	ROOM2	N	BLACKWELL, ELIZABETH
7206	CENTER B	LOC2	ROOM2	N	ALDEN, JOHN
206	CENTER B	LOC2	ROOM2	N	BABBITT, IRVING
205	CENTER B	LOC2	ROOM2	N	ARIOSTO, LODOVICO
204	CENTER B	LOC2	ROOM2	N	BRYAN, WILLIAM JENNINGS
7203	CENTER B	LOC2	ROOM2	N	ARMSTRONG-JONES, ANTONY
203	CENTER B	LOC2	ROOM2	N	BRADFORD, WILLIAM
202	CENTER B	LOC2	ROOM2	N	AKERS, JOHN
201	CENTER B	LOC2	ROOM2	N	BRENNEN, VINCENT
7200	CENTER B	LOC2	ROOM2	N	ALMEK, KAREN
200	CENTER B	LOC2	ROOM2	N	BITTIG, JEFF
1	COST CENTER M	L	R	N	BE, B
12346	COST CENTER M	LOC2	MROOM	N	ARNOLDVANDERHORNSTEIN, MAXINIA
12345	COST CENTER M	LOC2	MROOM	N	ARNOLDVANDERHORNSTEIN, MAXIMUS
312	CENTER A2	LOC3		N	BURTON, ROBERT
311	CENTER A2	LOC3		N	AGNEW, SPIRO
310	CENTER A2	LOC3		N	BELLOW, SAUL
309	CENTER A2	LOC3		N	ANDERSON, DAME JUDITH
308	CENTER A2	LOC3		N	BUNSEN, ROBERT WILHELM
307	CENTER A2	LOC3		N	BURNET, CAROL
306	CENTER A2	LOC3		N	AMPERE, ANDRE MARIE
305	CENTER A2	LOC3		N	BROWNING, ELIZABETH
304	CENTER A2	LOC3		N	ALLEN, ETHAN
303	CENTER A2	LOC3		N	BOUGHT, JOHN
302	CENTER A2	LOC3		N	ANTER, RUDY
301	CENTER A2	LOC3		N	BURNS, GEROGE
300	CENTER A2	LOC3		N	ALCOTT, LOUISE
410	CENTER A3	FIXA	FIXB	N	ADAMS, SAMUEL
409	CENTER A3	FIXA	FIXB	N	BANCROFT, ANN
408	CENTER A3	FIXA	FIXB	N	AVERY, ELIZABETH
407	CENTER A3	FIXA	FIXB	N	BEAMISH, CLIFFORD
406	CENTER A3	FIXA	FIXB	N	ABRONOWITX, JACK
405	CENTER A3	FIXA	FIXB	N	BRODERICK, ALLEN
404	CENTER A3	FIXA	FIXB	N	ALEXANDER, SALVATORE
403	CENTER A3	FIXA	FIXB	N	BLYTH, HOPE
402	CENTER A3	FIXA	FIXB	N	ADAMS, HERB
8401	CENTER A3	FIXA	FIXB	N	BECKERMAN, ARNOLD
7401	CENTER A3	FIXA	FIXB	N	ARCHER, KENNETH

Owners by Name Table

Today : Jun 15 1992 01:49 PM Page 1
Company: MOSCOM
Site: CHEYENNE CUST-1

OWNERS BY NAME TABLE

* - Privacy Option Flag: N, P Or S

Owner	*	Exten	Cost Center	Location	Room
ABRONOWITX, JACK	N	406	CENTER A3	FIXA	FIXB
ADAMS, HERB	N	402	CENTER A3	FIXA	FIXB
ADAMS , SAMUEL	N	410	CENTER A3	FIXA	FIXB
AGNEW, SPIRO	N	311	CENTER A2	LOC3	
AKERS, JOHN	N	202	CENTER B	LOC2	ROOM2
ALBERT, STEVE P.	N	7100	COST CENTER M	LOC1	RM1
ALCOTT, LOUISE	N	300	CENTER A2	LOC3	
ALDEN, JOHN	N	7206	CENTER B	LOC2	ROOM2
ALEXANDER, SALVATORE	N	404	CENTER A3	FIXA	FIXB
ALLEN, DEBBIE	N	107	CENTER A	LOC1	RM1
ALLEN, ETHAN	N	304	CENTER A2	LOC3	
ALMEK, KAREN	N	7200	CENTER B	LOC2	ROOM2
AMPERE, ANDRE MARIE	N	306	CENTER A2	LOC3	
ANDERSON, DAME JUDITH	N	309	CENTER A2	LOC3	
ANDERSON, LANCE	N	111	CENTER A	LOC1	RM1
ANGEL, KIM	N	109	CENTER A	LOC1	RM1
ANSEL, HANS	N	400	CENTER A3	FIXA	FIXB
ANSER, JANE	N	103	COST CENTER M	LOC1	RM1
ANTER, RUDY	N	302	CENTER A2	LOC3	
ARCHER, KENNETH	N	7401	CENTER A3	FIXA	FIXB
ARIOSTO, LODOVICO	N	205	CENTER B	LOC2	ROOM2
ARMSTRONG-JONES, ANTONY	N	7203	CENTER B	LOC2	ROOM2
ARNOLDVANDERHORNSTEIN, MAX	N	12345	COST CENTER M	LOC2	MROOM
ARNOLDVANDERHORNSTEIN, MAX	N	12346	COST CENTER M	LOC2	MROOM
ASTER, VICTORIA	N	8111	CENTER A	LOC1	RM1
AVERY, ELIZABETH	N	408	CENTER A3	FIXA	FIXB
AVERY, MILTON	N	208	CENTER B	LOC2	ROOM2
AXEL, FORD	N	7105	COST CENTER M	LOC1	RM1
AYERS, SCOTT	N	100	COST CENTER M	LOC1	ROOM1
AYERS, SCOTT	N	7101	COST CENTER M	LOC1	RM1
BABBITT, IRVING	N	206	CENTER B	LOC2	ROOM2
BANCROFT, ANN	N	409	CENTER A3	FIXA	FIXB
BE, B	N	1	COST CENTER M	L	R
BEAMISH, CLIFFORD	N	407	CENTER A3	FIXA	FIXB
BECKERMAN, ARNOLD	N	8401	CENTER A3	FIXA	FIXB
BEE, DEE	N	9111	CENTER A	FIXA	FIXB
BEEN, BRENT	N	110	CENTER A	LOC1	RM1
BELLOW, SAUL	N	310	CENTER A2	LOC3	
BEST, CARL	N	401	CENTER A3	FIXA	FIXB
BITTIG, JEFF	N	200	CENTER B	LOC2	ROOM2
BLACKWELL, ELIZABETH	N	207	CENTER B	LOC2	ROOM2
BLYTH, HOPE	N	403	CENTER A3	FIXA	FIXB
BOLUCO, TOM	N	7111	CENTER A	LOC1	RM1
BOUGHT, JOHN	N	303	CENTER A2	LOC3	
BOXER, ROBERT G.	N	209	CENTER B	LOC1	ROOM1
BOXER, ROBERT G.	N	113	CENTER A	LOC1	ROOM1
BOXER, ROBERT G.	N	102	COST CENTER M	LOC1	ROOM1
BRADFORD, WILLIAM	N	203	CENTER B	LOC2	ROOM2
BRENNEN, VINCENT	N	201	CENTER B	LOC2	ROOM2
BRENNER, KAREN	N	106	CENTER A	LOC1	RM1

Schedule Data Report

```
  Today:  Jun 15 1992 01:59 PM                                          Page   1
Company:  MOSCOM

                              SCHEDULE DATA REPORT
-------------------------------------------------------------------------------


  Schedule           Output     Reschedule Period     Report       Reschedule
     ID     Protect  Method      Period    Start      Period       Report
  --------  -------  --------  -----------  ---------  -----------  -----------
     32768    yes       file         no      01/01/70       N            no

                         Report       Event      Report
  Next Run Date/Time     Frequency    Code       Number
  ---------------------  -------------  --------  --------
  01/01/70               never         OD               1

  Output  Modifier
  -----------------
  No Modifier Given

  Output  File
  ------------------------------------------------------------------------
  /usr/cav2/reports/cav2/od.out

  Site List:
  ---------------------------------------------------------------------------


  Site Selection List:
  Site                    Include/Exclude
  --------------------    -------------------
  No Site 0 Selection     include
  No Site 1 Selection     include
  No Site 2 Selection     include
  No Site 3 Selection     include
  No Site 4 Selection     include
  No Site 5 Selection     include
  No Site 6 Selection     include
  No Site 7 Selection     include
  No Site 8 Selection     include
  No Site 9 Selection     include
```

Site Information

```
  Today:  Jul 31 1992 01:58 PM                                          Page   1
Company:  MOSCOM

                                SITE  INFORMATION
-------------------------------------------------------------------------------------

          Site Name: CHEYENNE CUST 1
        Site Number:   1
        Site PBX ID: M35529-001
       Site Address:
          Site City:
     Site State Zip:
Site Contact Person:
         Site Phone:

Site Tax Percentage:    Fed:    0.0  Suppress Authorization Code Printing? Y
                      State:    0.0                Store Raw Call Records? N
                     County:    0.0
                      Other:    0.0

          Site Name: DBOSTON TWO
        Site Number:  2
        Site PBX ID: M32832-001
       Site Address:
          Site City:
     Site State Zip:
Site Contact Person:
         Site Phone:

Site Tax Percentage:    Fed:    0.0  Suppress Authorization Code Printing? Y
                      State:    0.0                Store Raw Call Records? N
                     County:    0.0
                      Other:    0.0


 End of Site Information Table...
```

System Report

```
  Today:  Jun 15 1992 02:00 PM                                          Page   1
Company:  MOSCOM

                                   SYSTEM REPORT
--------------------------------------------------------------------------------

Transfer    Last                Sto.    Minimum     # Days Retain    # Days Retain
  Time      Seq.#    Privacy    Local   Duration      Call Rec.        Raw SMDR
--------    -----    -------    -----   --------    -------------    -------------

0:00:00                N         Y     0:00:00          75                3

Company Name                              Organization Level Title
------------                              -------------------------

MOSCOM                                    REGION          ; SECTOR
                                          ;DIVISION        ;DIVISION
                                          ;DIVISION      ;

Manager System Name                       Manager Path
-----------------------                   ------------


Default Printer 80 Column                 Default Spooler Path 80 Column
-------------------------                 ------------------------------

lp                                        lp

Default Printer 132 Column                Default Spooler Path 132 Column
------------------------------            -------------------------------

lp                                        lp



End of System Report...
```

Telephone System Configuration

Today: Oct 20 1992 02:51 PM
Company: Testing Inc.
Site: CHEYENNE CUST 1

TELEPHONE SYSTEM CONFIGURATION

Trunk Group	Facility Name	Access Code	Rate Type	Rate	Carrier	Source NPA/NXX	Cost Tandem	Cost Inbound	Trunk
11	CO	911	tariff	$000.00	ATT	714/680	yes	yes	1111
12	CO	1	tariff	$000.00	ATT	714/680	yes	no	1001
12	CO	1	tariff	$000.00	ATT	714/680	yes	no	121
12	CO	201	tariff	$000.00	ATT	714/680	yes	yes	322
12	CO	201	tariff	$000.00	ATT	714/680	yes	yes	323
13	CO	133	tariff	$000.00	ATT	714/680	yes	no	1330
13	CO	134	minute	$000.01	FLAT	/	yes	discard	1340
13	CO	135	none	$000.30	ATT	714/680	yes	yes	1350
13	CO	136	call	$000.40	FLAT	/	yes	yes	1360
777	CO	777	tariff	$000.00	ATT	714/680	yes	yes	777
901	CO	901	tariff	$000.00	ATT	714/680	yes	yes	901
8888	CO	88888	minute	$320.00	FLAT	/	yes	discard	82111
9999	CO	9999	tariff	$000.00	FLAT	/	yes	no	9999

End of Telephone System Configuration Table...

Unassigned Extensions

```
  Today:  Jun 25 1992 01:38 PM                                          Page   1
Company:  MOSCOM
   Site:  CHEYENNE CUST-1

                          UNASSIGNED EXTENSIONS REPORT
-----------------------------------------------------------------------------------

                                  UNASSIGNED  EXTENSIONS
                                  ----------------------
                                            503
                                            515


End of Unassigned Extensions Report...
```

UNIX File Tree

D

This appendix outlines the file structure of the AT&T CA V2 system.

The application and data files reside under CA V2's home directory (`/usr/ca/cas`), except for:

- Systems with multiple disks (labelled `/usr2` and, if used, `/usr3`) required relocation of some data and work files, as follows:
  - The call record data file (cr.dat) resides in a second disk under `/usr2/ca`
  - In a 3-disk system, the call record index file (cr.idx) resides in the third disk under `/usr3/ca`
  - If CRM is installed, large temporary work files are created in a second disk under `/usr2/ca`
- Three external files are used in the performance of the following tasks:
  - `/etc/rc.d/z_v2.ca` is used to start CA background processes after rebooting the system
  - `/usr/ca/tcas/bin/tcms` is a pointer file used throughout the application to find CA system-specific information
  - `/usr/spool/cron/crontabs/ca` is used to run scheduled reports and clean up the errlogs file

File Name	Contents
bin	CA program executables and tools
criq	CRM data files, including the data dictionary, test case database, stored procedures, and general program maintenance parameters
errlogs	Logs of significant system events and/or errors (see Chapter 9 *Viewing and Interpreting CA V2 Log Files,* for details)
etc	CA's general program maintenance parameters, including default system tables
fedata	Call records converted into CA's internal format, but not yet processed (not readable — not an ASCII file)
frms	Screen displays
group	CA V2 process information and communication file directory
help	On-line help text
polldata	Call records received from the switch, not yet translated into CA' V2s internal format (not readable — not an ASCII file)
reports	Contains a subdirectory for each CA V2 user to store report files
rpts	Report executables
set up	CA V2 package installation script
tapedata	Calls from tape for rating
tcms	CA V2 data files — except for call records in multiple-disk systems

TABLE D-1. Files Under CA's Home Director

Raw SMDR is stored in the home directory under:

```
/usr/ca/cas/etc/cdr/site_#/cdr_yymmdd
```

Where: # = site number
yy = year
mm= month
dd = day

Glossary

A

access code
A field in a call-detail record that contains the numbers dialed to get an outside line to a telephone facility such as a central office (CO).

account code
A field in a call-detail record that contains a user-defined identifier. When placing or receiving a call, account codes are typically dialed to identify the call subject matter or client account, for example.

account code reports
A CA V2 report listing detailed or summary call information for each active client account number.

add
The <A>dd command in CA V2 used to append a new record to a file.

answer supervision
The capability to detect when a telephone call has been answered.

area code
A geographic area encompassing many CO exchanges. A telephone number, 716-381-6000, for example, identifies the area code (71 6) and CO exchange (381) used by the subscriber's line (6000).

ASCII
The standard digital code for alphanumeric characters sent between computers established by the American Standards Committee for Information Exchange.

authorization code
A field in a call-detail record output by some switches that contains a user-defined identifier. Authorization codes are typically used when placing a call to identify the call origin or charge information.

automatic number identification (ANI)
The ability of ISDN equipment to pass to their subscribers the phone numbers (in digital form) of subscribers' callers. CA V2 supports ANI for switches that provide this feature.

B

backup
A computer function used to copy system databases onto diskettes or tape.

baud rate
A measurement of digital transmission speed representing the number of signal events per second. If the signal event represents the presence or absence of one bit, then the baud is identical to bits per second.

bits per character
The length (number of bits) of a single character transmission.

buffer
A temporary storage area in your computer.

C

call detail recording (CDR)
A switch capability with which the details concerning the path of a call from origination to termination are recorded as a call-detail record.

call type
The type of telephone service used by the call. Local, IDDD, and WATS are examples of call types used in CA V2 reports.

carrier
1. A company that provides telephone services, such as AT&T Communications, MCI, and US SPRINT.
2. A field in a CDR record that contains the interexchange carrier (IXC) code for the carrier used by a call.

CDRU/S and CDRU/SE
A device that collects call records from a switch and transfers them either directly or via a polling schedule to a processing center.

central office (CO)
The telephone company facility that routes and connects calls from a local area.

Centralized System Management (CSM)
An operations-support software tool that provides system-management applications such as terminal change management (TCM), facilities management (FM), traffic management (TM), and an integrated and centralized database containing communications inventory data for System 85 and DIMENSION ® Feature Package 8 (FP8). System 75 has its own fully integrated system-management capability, which CSM can access remotely.

CENTREX
A service provided by some local telephone companies, whereby subscribers are given switch-like capabilities by sharing CO facilities.

CCSA
Common Control Switching Arrangement. Switching facilities connected by the telephone company to corporate Tie line networks. All stations in the network can then dial one another regardless of distance and without using exchange facilities. They can also dial outside the network via local and/or foreign exchange lines.

correction time
An estimate of how long it takes to make a telephone connection. This includes all non-chargable time from dialing to answering a call.

cost center
A fixed level (second to the lowest) in a company's organizational hierarchy used by CA V2 to allocate telephone expenses.

costing
The set of CA V2 functions and data files used to screen and then compute the cost of valid calls; the process of computing the cost of calls.

Custom Report Module (CRM)
A CA V2 option that adds the ability to create custom reports, bar graphs, and histograms from the stored call-record database and related files.

cursor
A movable pointer that designates where your input is entered on the screen or where you select an item from a displayed menu. The cursor occupies one character position.

D

database
Information in CA V2 tables that identifies its users' equipment, company organization, geographical area, etc.

data bits
The actual length (number of bits) of a single character transmitted by a device.

data entry screen
The screen display used to view and/or edit database records.

default
The value, option, or feature automatically supplied by the system, unless the user specifies otherwise.

detail
The <D>etail command; used to access a "branch" in a tree-like structured file.

detail reports
Reports that list every call record from every extension or active account that comply with the selection criteria.

dialed digit processing
A CA V2 feature whereby dialed number inconsistencies can be identified for additional processing.

dialing pattern
The way a telephone number is dialed from a locality.

dial-up link
A communication path between two or more systems established by a modem on one end of a link dialing a modem on the other end of the link.

disk
A rigid platter coated with magnetic material and used as a storage medium.

diskette
A thin, flexible platter (also called a floppy disk) coated with magnetic material and used as a storage medium.

E

EBCDIC
Extended binary-coded decimal interchange code. A code that uses eight binary positions to represent a single character.

equal access
The ability to place long-distance calls over any carrier network. A customer's primary carrier is typically accessed by dialing 1 or 0 before the telephone number; any other carrier is accessed by its 10xxx dialed code.

escape
The escape key on the keyboard, referred to as <ESC> on screen displays; used to execute an <A>dd, <Q>uery, or <U>pdate command.

enter
1. The carriage return key on IBM or 6386 WGS terminal keyboards. Referred to as <RETURN> on CA V2 screen displays. 2. In a procedure, the action of typing a value and pressing <RETURN>.

exchange
A geographic area within which calls are generally toll-free. A telephone number, 716-381-6000 for example, identifies the area code (716) and CO exchange (381) used by the subscriber's line (6000).

exit
The <E>xit command in CA V2; used to move out of the current data entry screen or menu and return to the previous menu.

extension
A field in a call-detail record that contains the number of a voice terminal, indicating the origin of an outgoing call or the destination of an incoming call.

F

facility
A service provided by a telephone company to its subscribers.

file
A collection of program instructions or data records stored on a disk. Each file has a label, which follows the naming conventions of the operating system.

flexible hierarchy
A CA V2 feature allowing an undefined number of organizational levels between company and cost center, limited only by a maximum of 78 characters in the string that names the levels.

foreign exchange (FX)
A communications line connecting a subscriber's switch to a remote CO.

format
The arrangement or layout of data.

G

generate
The <G>enerate command; used for immediate output of a report.

H

hard disk
See disk.

help
The <F1> key on the keyboard used to display information about CA V2 functions.

hexadecimal digits
Numbers in base 16.

holidays
The holidays during which telephone discount rates apply.

I

INCOM
The CA V2 call type for calls with a CA V2 site as its destination.

Integrated Poller
A CA V2 option adding the capability to poll and administer a remote CDRU from the application.

Integrated Services Digital Network (ISDN)
A network that provides end-to-end digital communications to support a wide range of services, including voice and data, to which users have access by a set of standard, multipurpose user-network interfaces.

interface
A device or system forming a common boundary at which independent devices or systems interact.

International Direct Distance Dial (IDDD)
The CA V2 call type for calls to a foreign country that are dialed using the 011 toll prefix.

IS-IL
The CA V2 call type for in-state, in-LATA calls; a toll call placed within its own state and LATA boundaries.

IS-OL
The CA V2 call type for in-state, out-of-LATA calls; a toll call placed within its own state, but outside its LATA boundaries.

IWTS*n*
The CA V2 call type for an incoming band *n* WATS call, where *n* = 0 to 9.

K

KTS
Key Telephone System; see switch.

L

LATA
Local Access Transport Area; a region covering adjacent COs. Calls within their LATA are serviced by the local telephone company, calls outside their LATA require the services of a long distance carrier.

local
The CA V2 call type for a call within the local service area of the calling destination.

login
The process of gaining access to a computer system.

M

master
The <M>aster command in CA V2; used from a “lower branch” to access the “parent” record in a tree-like structured file.

Megacom
Megacom 800 and Megacom are two services of AT&T similar to InWATS and OutWATS, except that the local lines from a subscribers site and the AT&T service office are the responsibility of the subscriber (typically T1 lines).

memory
The working storage area in the computer where programs and data are processed.

menu
A list of selectable items on a screen.

Message Telephone Services (MTS)
A call rating system for long distance services.

minimum duration
A threshold value specified by the user that tells CA V2 when to consider a call valid.

modem
A device that converts digital data signals to analog signals for transmission over voice-terminal circuits. Analog signals are converted back to original digital data signals by another modem at the other end of the circuit. Also called a data set.

N

network
1. In the context of voice and/or data communications, a complex consisting of two or more interconnected switching systems. 2. In the context of computer operations, a system consisting of one or more computers and the connected terminals and related devices such as modems and input/output (I/O) channels.

network costing
The CA V2 software option designed for private telephone network users, to track network calls and charge their costs to the originating station. Also known as “call piecing.”

next
The <N>ext command of CA V2; used to access the next sequential record in a file (or portion thereof), retrieved either by opening the file or by the <Q>uery command, once the file is open.

O

operating system
The software that controls and allocates a computer's resources, such as memory, disk storage, and the screen display.

OS-IL
CA V2 call type for out-of-state, in-LATA calls; a toll call that crossed its state boundaries, but stayed within its own home LATA.

OS-OL
CA V2 call type for out-of-state, out-of-LATA calls; a toll call that crossed both its state and LATA boundaries.

owner
The lowest fixed level in CA V2's organization structure.

P

parity
A method used by some devices to check that data was transmitted correctly. Parity can be "odd," "even," or not used at all.

password
A unique string of characters that a user enters to access a program.

PBX
Private Branch Exchange. See switch.

poller
A system that acquires, organizes, and stores call-detail records collected from a collector system and then transmits the records to a host processor.

port
The data transmission "outlet" on a device used for communicating with other devices.

port adapter
A device that allows the coupling of different connectors, such as a 25-pin RS232C connector to a 9-pin modular jack.

previous
The <P>revious command in CA V2; used to access the record previously displayed on the screen.

private line
A telephone line between two points reserved for the use of a single customer.

processor
A central processing unit (CPU) that receives data, manipulates it, and supplies results. The AT&T 6386 processor stores the UNIX operating system and CA V2 software.

protocol
A set of conventions or rules that describes how data is organized, transmitted, and received.

Q

query
The <Q>uery command in the CA V2; used to retrieve selected records from a file. The first record is displayed on the screen. Subsequent records, if any, are displayed using the <N>ext command.

R

read/write privileges
Permission granted each user to copy (read) and/or change (write) data shared by other users in a computer system.

record
The smallest piece of information that CA V2 can retrieve from a file. Records may contain several items of information (fields); for example, a call record contains the time of a call, its duration, city and state destination, account code dialed, and cost.

remote access
The ability to access a system from a terminal at a remote location.

remove
The <R>emove command; used to permanently delete the record currently displayed.

reporting period
The time interval covered in a report.

restore
The computer function that allows you to copy back into storage the system database, previously backed up onto diskettes or tape.

return
The <RETURN> key, which corresponds to the <ENTER> key on an IBM or AT&T 6386 WGS keyboard.

RS232C interface
An Electronic Industries Association (EIA) standard 25-pin interface between data terminal equipment (DTE) and data communication equipment (DCE) using serial binary interchange signals.

S

selection report
A CA V2 report that lists summary or detailed call-record information based on the selection of a time, date, cost, duration, extension, account code, number, etc.

serial data transmission
An operation whereby data is transmitted sequentially, one bit after another.

SMDR
Station Message Detail Recording. A switch capability enabling details concerning the path of a call from origination to termination to be made available for further use. The preferred term for this capability is call-detail recording (CDR).

Software Defined Network (SDN)
An AT&T service for a virtual connection of subscriber's sites in a network.

SPCL
The CA V2 call type for “special numbers,” such as 411, 800 and 900 numbers.

stop bits
The number of bits that trail after the transmission of a single character.

straight-through cable
A cable with wires connected between identical pins on each end.

summary reports
A collection of CA V2 reports condensing and summarizing call record information by total number of calls, duration, and cost.

switch
The software-controlled communications processor complex that interprets dialing pulses, tones, and/or keyboard characters, and makes the proper interconnections both within the system and external to the system. The switch itself consists of a digital computer, software, storage device (memory), and carriers with special hardware to perform the actual connections. A switch provides voice and/or data communications services (including access to public and private networks) for voice and data terminals on a customer’s premises.

switch administration
The method of specifying features and/or services available to users of a communications system. In relation to the record-producing feature, switch administration refers to establishing the CDR output in the switch.

T

T1
A digital facility that can carry multiple simultaneous voice- or data-communications at high speeds on the same physical link. A T1 line is connected to a customer’s switch using transmit/receive interface equipment that translates the voice or data streams into and out of a carrier’s digital network.

tandem call
A connecting call in a telephone network that comes into a switch through one trunk and is transferred out again through another.

threshold
A critical level that, when reached, produces a system response.

tie
A line that “ties” together two telephone switches. Extensions at either point, as well as the CO exchange, can be dialed locally.

trunk
1. A dedicated communication channel between two switches. 2. A field in a call-detail record that contains the identifier for the specific trunk (or group of trunks) used by the call. CA V2 translates the “access code used” in AT&T switches as trunks.

tty name
The “logical” name of a physical computer port.

U

UNIX operating system
The program that manages the resources of the CA V2 processor, including input and output procedures, process scheduling, and file systems.

update
The <U>pdate command of CA V2; used to edit the information in the record currently on display.

utilities
A group of programs within an application or operating system that provide specific processes.

V

valid calls
Calls that have computable costs. That is, calls over the duration threshold, routed through defined trunks, and dialed using a pattern “understood” by CA V2 as able to reach a destination. Invalid calls are discarded by CA V2.

volume discounting
A CA V2 optional capability enabling discounting of calls using specific carrier services based on volume thresholds for a defined time period.

W

window
An online “help” feature used to display information about the selected function on a menu or to list valid entries for the current field on a data entry screen. Where enabled, help windows are accessible by pressing the <F1> keys.

WATS
Wide Area Telephone Services; a type of long distance service provided by some telephone companies like MCI and AT&T, where bulk usage over a billing period determines the rates for calls within the same distance band.

WATS*n*
CA V2 call type for an outgoing band *n* WATS call, where *n* = 0 to 9.

Z

ZERO+
The CA V2 call type for operator-assisted calls.

Index

A

access code *see* telephone system configuration
account code
  edit configuration, 7-31
  list port database, 6-20
  reports, 6-17
  setup, 5-22
alarms
  acknowledgement, 9-4
  edit port configuration, 7-38
  list database, 6-20
  setup port, 5-5
allocation reports, 6-12
answer supervision, 1-6
application tips, 6-25
authorization code
  setup, 5-23
  edit, 7-33

B

backup system, 5-26, 8-3

C

cabling, 2-12
call-collection devices, 2-2
  edit configuration, 7-3
  setup for sites, 5-14
call cost adjustments,
  by call type, 5-16, 7-16
  by cost center, 5-19, 7-25
  list database, 6-20
call processing, 2-6
call rating (graphic), 3-10
  and carrier information, 3-3
  international, 3-2
  local, 3-2
  long distance, 3-2
  start/stop process, 5-27, 8-3
  basic, 3-2
call records
  begin collection, 5-27
  defining collection parameters, 5-7
  delete database, 5-25, 7-8
  editing database, 7-7
  editing collection parameters, 7-2
  from billing tape, *see* software options
call type, 3-5
  defaults, 3-5
  edit adjustments, 7-16
  print adjustment table, 6-20
  report, 6-18
  adjustments setup, 5-16
capacities, 2-13
carriers, 1-3
  edit configuration, 7-18
  print information, 6-20
company name, *see* organization structure
cost center
  edit database, 7-25
  global update, 7-27
  list database, 6-20
  setup, 5-22
  see also organization

D

data entry
  commands, 4-6
  screens, 4-4
dialed-digit processing, 3-6
  edit configuration, 7-14
  list database, 6-20
  default table, 3-7
  setup, 5-13

E

error logs, 9-2
  acknowledge alarm, 9-4
extension
  list unassigned, 6-20
  see also organization

F

facility *see* telephone system configuration, dialed digit processing
facilities group report, 6-19
frequently called numbers report, 6-19
FX (foreign exchange), 1-4

H

hardware components, 2-9, 2-10
help feature, 2-5, 4-8
holiday table, 7-21
  list table, 6-20

I

installation review, 5-2
ISDN *see* options
integrated poller *see* options

K

KTS (Key Telephone System), 1-5
    installing interfaces, 8-6

L

LATA, 1-3
login, 4-2
load bulk data, 8-7

M

markups *see* call cost adjustments
menu, A-1
    how to use, 4-3
    changing color settings, 4-9
multi-site summaries, 7-39
    polling schedule, 7-40
    entering information, 7-41

N

Network
    correction time, 7-18
    national, 1-2
    private, 1-5

O

options, 2-6
    installation, 8-6
organization
    setup table, 5-20
    edit table, 7-24
    flexible hierarchy, 2-4
    load bulk data, 8-7
output devices
    setup, 5-4
    edit configuration, 7-36
owners
    edit configuration, 7-28
    global update, 7-30
    list database, 6-20
    setup, 5-23
    see also organization

P

PBX (Private Branch Exchange), 1-5
    installing interfaces, 8-6
poller systems, 2-3
    operation in system, 2-8
ports, 7-36
    see also alarms
Printer
    update configuration, 7-35
    setup, 5-3
printing reports *see* report scheduling, *also* individual report or system table

R

rate tables, edit, 7-21
raw SMDR
    site retention, 7-9
    system retention, 7-3
    UNIX pathname, D-2
reports, 6-1
    list schedule, 6-20
    scheduling, 6-21
    view/print, 6-23
    see also individual report by name

S

sanity port, *see* alarms
selection report, 6-6
security, 2-4
    edit, 7-43
    setup, 5-24
site
    edit configuration, 7-9
    information, 5-10
    installation, 5-8
    list information, 6-20
    networks (graphic), 2-3
    removal, 8-5
surcharges, *see* call cost adjustments
switch, 2-2
    in system operation, 2-6
    interface kits, 2-11
    see also telephone system configuration, PBX, KTS
system
    information listing, 6-20
    status check, 8-2
    software update, 8-6

T

taxes, 3-8,
see also call type, cost center
telephone system configuration, 3-3
setup, 5-12
edit, 7-10
list table, 6-20
tie line, 1-4
trunk, 1-4 *see also* telephone system configuration
troubleshooting
restart processes, 9-2
error logs, 9-2
reporting trouble, 9-5,

U

user
access, *see* security
reporting period, 5-6
unassigned
extensions, 7-28
account codes, 7-31
unidentified
authorization codes, 7-33
trunks, 3-4
UNIX access, 9-2

V

volume discounting, *see* options

W

WATS, 1-4
Wildcards, 7-15