585-310-220
Issue 2
December, 1995

Intuity Integration with ROLM 8000, 9000, and 9751

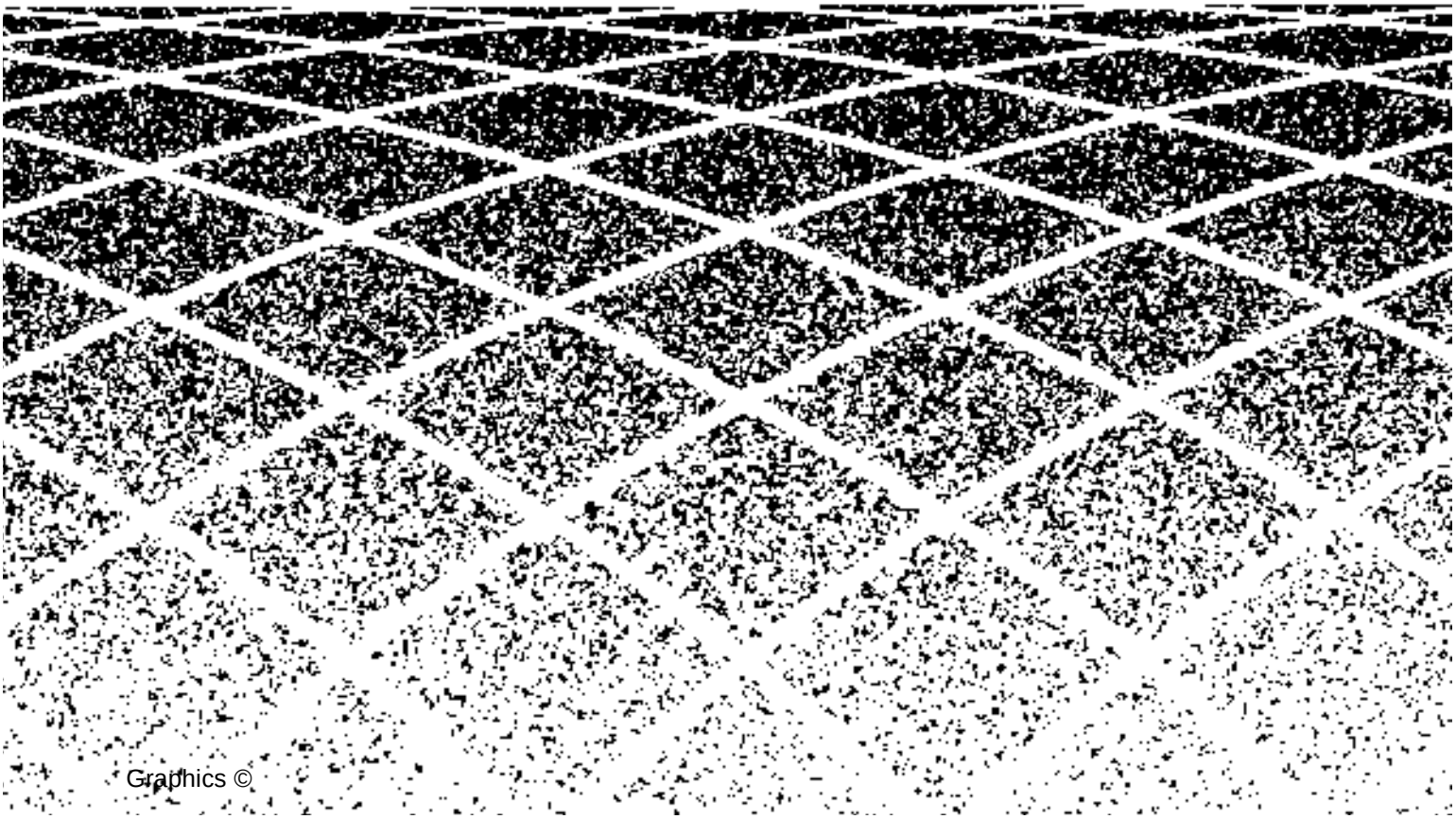

Blank Page

Contents

Table of Contents i

About This Document xi

- Intended Audiences xi
- Prerequisite Skills or Knowledge xii
- How to Use This Document xii
- Conventions Used xiii
- Trademarks and Service Marks xiv
- Related Resources xv
- How to Make Comments About This Book xvii

1 Introduction and Requirements for Integration 1-1

- Safety Considerations 1-3
- Factory Assembled Systems 1-3
- Determining the Placement of the SID 1-4
- System Configuration 1-4
- Component Checklists 1-8
  - ROLM 8000, 9000, and 9751 CBX Hardware 1-8
  - Switch Integration Device Hardware 1-10

2 Switch Integration Device Basics 2-1

- The Switch Integration Device Hardware 2-1
  - Front Panel 2-2
  - Rear Panel 2-2
- The Switch Integration Device Software 2-4
  - Menu Screens 2-4
  - Edit Screens 2-5
    - Single Item Edit Screens 2-6
    - Two Item Edit Screens 2-6
    - Scroll Item Edit Screens 2-6

Contents

Edit Screen Keys 2-7
Edit Screen Help Functions 2-7
Action Screens 2-8

3 Switch Integration Planning 3-1
- Determine the Number of Voice Mail Ports 3-1
- Select a Class of Service 3-3
- Determine the RPI Port Address 3-4
- Determine the Feature Configuration Table 3-4
- Select the Message Desk Number 3-4
- Select the Extension Length Number 3-5
- Select the CPID Pad String 3-5
- Select the MWI Pad String 3-5
- Select the Message Waiting Indicator Feature 3-5
- Determine the SMDI Baud Rate 3-6
- Determine the MWI Interleave Factor 3-6
- Message Waiting On/Off 3-6
- Determine the Call Sequence 3-6
- Hunt Group 3-6
- Determining the Extension/LTN Plan 3-6
- Determine Pilot and Call Appearance Extensions 3-8
- Test Subscriber Extensions 3-9

4 Hardware Installation 4-1
- Task 1: Connect an Analog Line to the Modem 4-2
- Task 2: Connect the SID to the ROLM CBX 4-3
- Task 3: Connect the SID to the Intuity System 4-3
- Task 4: Connect the SID Power Cord 4-4

5 Installing SID Software on the Intuity System 5-1
- Requirements 5-1

Contents

- Stop the Voice System 5-2
- Load the SID Software 5-3
- Start the Voice System 5-7
- Turn on Transfer Feature 5-8

6 Administering the Intuity System for the ROLM Integration 6-1

- Administering the Switch Link Administration Screen 6-1
- Stopping and Restarting the Voice System 6-6
- Administering the System Translation Screen 6-7

7 ROLM 8000 CBX Administration 7-1

- ROLM 8000 CBX Administration 7-2

Administer the Class of Service 7-2

Administer the Analog Voice Ports 7-5

Create Analog Voice Port Extensions 7-6
Assign the Extensions to the Analog Ports 7-7
Disable Testing of the Voice Ports 7-8
Assign the Class of Service 7-9
Verify the Analog Voice Port Administration 7-10

Administer the ROLMphone 400 Digital Station Set 7-11

Select the Feature Configuration Table 7-13
Configure the Function Keys 7-13
Assign Line Appearances for the Call Queue 7-15
Assign Busy Indicator Line Appearances 7-16
Assign the Feature Configuration Table to a PAD 7-19
Define the ROLMphone 400 as a Display Phone 7-20
Create Eight Line Appearance Extensions 7-21
Assign Line Appearance Extensions to Line Appearance Keys 7-22
Assign the Analog Extensions to Line Appearances 7-24
Forward the Call Appearances 7-25
Assign a Class of Service to Call Appearances 7-27

Administer the Hunt Group 7-28

Contents

8 ROLM 9000 and 9751 CBX Administration 8-1

- Administer the Class of Service 8-2
- Administer the Analog Voice Ports 8-4
  - Create Analog Voice Port Extensions 8-4
  - Create and Assign SLI Ports 8-6
  - Verify the Analog Voice Port Administration 8-7
- Administer the ROLMphone 400 Station 8-8
  - Select the Feature Configuration Table 8-10
  - Edit the Feature Configuration Table 8-10
    - Feature Configuration Table, Row 1 8-12
    - Feature Configuration Table, Row 2 8-13
    - Feature Configuration Table, Row 3 8-14
    - Feature Configuration Table, Row 4 8-15
    - Feature Configuration Table, Row 5 8-16
    - Feature Configuration Table, Rows 6, 7, and 8 8-17
    - Feature Configuration Table, Rows 9 and 10 8-18
  - Create Eight Line Appearance Extensions 8-19
  - Program the ROLMphone 400 8-21
- Administer the Hunt Group 8-23

9 Switch Integration Device Administration 9-1

- Check the SID 9-2
- Administer the Basic Parameters 9-3
- Assign Extensions and LTNS 9-5
  - Using AutoFill 9-7
- Saving and Starting the Configuration 9-8
- Administer Serial Data Links 9-10
- Changing System Parameters 9-13
  - Setting the Date and Time 9-13
  - Setting the Remote Access Device Control 9-14
- Setting a Security Level 9-14

Contents

10 Acceptance Test Administration 10-1

- Administer the Test Subscribers 10-2
  - ROLM 8000 CBX Test Subscriber Administration 10-2
  - ROLM 9000 and 9751 CBX Test Subscriber Administration 10-3
- Defining the Message Waiting Button 10-5

11 Cut-to-Service 11-1

- Administer the Subscribers 11-2
  - ROLM 8000 CBX Subscriber Administration 11-2
  - ROLM 9000 and 9751 CBX Subscriber Administration 11-4
- Defining the Message Waiting Button 11-5
- Cut-from-Service Procedures 11-5
  - Cutting from Service on the ROLM 8000 11-6
  - Cutting from Service on the ROLM 9000 and 9751 CBX 11-7

A Troubleshooting and Error Logs A-1

- Switch Integration Device Problems A-1
- Error Logs A-6
- Clearing Your Configuration A-10
- Test the SID ROLMphone Set Emulation A-11
  - Test One: Receive a Call at the SID A-13
  - Test Two: Place a Call from the SID A-15
  - Test Three: Transfer a Call with the SID A-16
  - Test Four: Lighting a Message Waiting Lamp with the SID A-17
- Special Processing for Message Waiting Lamps A-18

Contents

B **Using Views During Integration** B-1

- View Mode B-1
- Using Statistics Mode B-4
- Using Metrics Mode B-5
- Using Diagnostic Monitors B-6
- Clearing Statistical Information B-7

C **Switch Administration for INTUITY Lodging** C-1

- Hunt Group Administration C-1
- Message Retrieval Administration C-1
  - Message Retrieval in Lodging Systems without AUDIX C-2
  - Message Retrieval in Systems Shared with AUDIX C-2
    - Retrieval from the AUDIX Application C-2
    - Retrieval from the Lodging Application C-2
  - Alternate Message Retrieval Method C-2
- Voice Mail Administration C-3
- Call Coverage Path C-4
- Do-Not-Disturb C-4
- Cut-to-Service C-5
  - Gradual Cut-to-Service C-5
  - One-Step Cut-to-Service C-5

ABB **Abbreviations** ABB-1

GL **Glossary** GL-1

IN **Index** IN-1

About This Document

Intuity™ Integration to ROLM 8000, 9000, and 9751 CBX contains installation and administration instructions for integrating a ROLM CBX with an Intuity system. The document contains instructions or information on the following topics.

- Switch integration planning strategies
- Switch Integration Device (SID) hardware installation instructions
- Software installation instructions
- ROLM 8000, 9000, and 9751 administration instructions
- Acceptance test procedures
- Cut-to-Service procedures
- SID troubleshooting guide

The document contains information only for the ROLM CBX integration with the Intuity system. If you have another type of switch, refer to the switch integration document for that switch.

Intended Audiences

This document is designed primarily for the on-site AT&T-certified services technician, the customer's technical personnel, and the customer's ROLM services technician. Use the document to install Intuity system integration-required hardware and software, perform acceptance tests, and perform cut-to-service. The customer or the customers' switch vendor should use the document when performing switch administration tasks and other customer required tasks.

Secondary audiences include the AT&T personnel shown in the following list.

- Field support
- The Technical Service Center (TSC)
- Provisioning project managers
- The Sales and Technical Resource Center (STRC)
- Helpline personnel

- Factory assemble, load, and test (ALT) personnel

Prerequisite Skills or Knowledge

Typical readers should understand AT&T computer systems, switches, and hardware and software installation procedures. AT&T provides and recommends Intuity system training for customers. Customers should be familiar with the ROLM CBX or contact their switch vendor.

How to Use This Document

This document provides additional information you need to know when integrating a ROLM CBX with an Intuity system. Use this document as additional information with the following documents:

- *Intuity MAP/5 Hardware Installation,* 585-310-146
- *Intuity MAP/40 Hardware Installation*, 585-310-138
- *Intuity MAP/100 Hardware Installation*, 585-310-139
- *Intuity Software Installation*, 585-310-157

Do not perform any tasks in this document until you complete the required tasks in the installation documents.

Conventions Used

The following conventions were used in this book:

- Rounded boxes represent keyboard keys that you press.

  For example, an instruction to press the enter key is shown as follows:

  Press (ENTER).

- Square boxes represent phone pad keys that you press.

  For example, an instruction to press zero on the phone pad is shown as follows:

  Press [0].

- The word “enter” means to type a value and press (ENTER).

  For example, an instruction to type y and press (ENTER) is shown as follows:

  Enter y to continue.

- Commands and text you type or enter appear in bold.

- Values, instructions, and prompts that you see on the screen are shown as follows:

  Press any key to continue.

- Variables that the system supplies or that you must supply are shown in *italics*. For example, an error message including one of your filenames is shown as follows:

  The file *filename* is formatted incorrectly

- The sequence of menu options that you must select to display a specific screen is shown as follows:

  Begin at the Administration menu, and select the following sequence:

  > Voice System Administration

  > Voice Equipment

  In this example, you would first access the Administration menu. Then you would select the Voice System Administration option to display the Voice System Administration menu. From that menu, you would select the Voice Equipment option to display the Voice Equipment screen. For information about how to select a menu option, see "Chapter 1, Introduction and Requirements for Integration"

Trademarks and Service Marks

The following trademarked products may be mentioned in this book:

Product Name	Company
5ESS™	Registered trademark of AT&T
AT™	Trademark of Hayes Microcomputer Products, Inc.
AUDIX®	Registered trademark of AT&T
BT-542B™	Trademark of BusLogic Inc.
COMSPHERE®	Registered trademark of AT&T Paradyne Corp.
CONVERSANT® Voice Information System	Registered trademark of AT&T
DEFINITY®	Registered trademark of AT&T
Dterm™	Trademark of NEC Telephones, Inc.
Equinox™	Trademark of Equinox Systems, Inc.
Intuity™	Trademark of AT&T
MD110®	Registered trademark of Ericsson, Inc.
MEGAPLEX™	Trademark of Equinox Systems, Inc.
MEGAPORT™	Trademark of Equinox Systems, Inc.
Meridian™	Trademark of Northern Telecom Limited
Microcom Networking Protocol®	Registered trademark of Microcom, Inc.
NEAX™	Trademark of NEC Telephone, Inc.
NEC®	Registered trademark of NEC Telephones, Inc.
Northern Telecom®	Registered trademark of Northern Telecom Limited
ORACLE™	Trademark of Oracle Corporation
Paradyne®	Registered trademark of AT&T
Phillips®	Registered trademark of Phillips Screw Company
Rolm®	Registered trademark of International Business Machines (IBM)
SL-1™	Trademark of Northern Telecom Limited
TMI™	trademark of Texas Micro Systems, Inc.
UNIX®	Registered trademark of UNIX Systems Laboratories, Inc.
VT100™	Trademark of Digital Equipment Corporation

Related Resources

In addition to this book, you may need to reference the following books:

Intuity System Description	585-310-211
Intuity AUDIX R3.2 Administration and Feature Operations	585-310-552
Intuity Documentation Guide	585-310-540
Intuity R2.0 Planning for Migrations and Upgrades	585-310-650
Intuity New System Planning for Release 2.0	585-310-604
Intuity MAP/5 Hardware Installation	585-310-146
Intuity MAP/5 Installation Checklist	585-310-154
Intuity MAP/40 Hardware Installation	585-310-138
Intuity MAP/40 Installation Checklist	585-310-155
Intuity MAP/100 Hardware Installation	585-310-139
Intuity MAP/100 Installation Checklist	585-310-156
Intuity Software Installation for Release 2.0	585-310-157
Intuity Integration with System 75 and DEFINITY Communications System G1and G3	585-310-214
Intuity Integration with System 85 and DEFINITY Communications System G2	585-310-215
Intuity Integration with 5ESS	585-310-219
Intuity Integration with DMS-100	585-310-223
Intuity Integration with Northern Telecom SL-1, Meridian, and Meridian SL-1	585-310-221
Intuity Integration with Mitel	585-310-222
Intuity Integration with NEAX	585-310-216
Intuity Integration with ROLM 8000,9000,9571	585-310-220
Intuity Integration with Merlin Legend	585-310-231
Intuity AUDIX Digital Networking Administration	585-310-533
Intuity Call Accounting System User Guide	585-310-728
Intuity Call Accounting System Quick Reference	585-310-729

AMIS Analog Networking	585-300-512
Intuity Intro Voice Response	585-310-718
Intuity Platform Administration and Maintenance for Release 2.0	585-310-554
Intuity Message Manager User's Guide	585-310-725
AUDIX Administration and Data Acquisition Package	585-302-502
A Portable Guide to Voice Messaging	585-300-701
Voice Messaging Quick Reference	585-300-702
Multiple Personal Greetings Quick Reference	585-300-705
Voice Messaging Wallet Card	585-304-704
Voice Messaging Outcalling Quick Reference	585-300-706
Voice Messaging Business Card Stickers	585-300-705
Intuity AUDIX R3.2 Voice Messaging Subscriber Artwork Package	585-310-730
Intuity Message Manager Administration and Diagnostics	585-310-553
Intuity Upgrade and Migration Procedures for Release 2.0	585-310-158

How to Make Comments About This Book

A reader comment card is behind the title page of this book. While we have tried to make this book fit your needs, we are interested in your suggestions for improving it and urge you to complete and return a reader comment card.

If the reader comment card has been removed, send your comments to:

AT&T
Product Documentation Development Department
Room 22-2C11
11900 North Pecos Street
Denver,CO 80234

Please include the title and order number of this book.

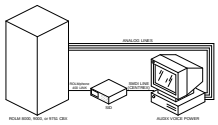

1

Introduction and Requirements for Integration

This chapter describes the requirements for the ROLM 8000, 9000, and 9751 CBX integration with an Intuity™ system. The chapter includes a diagram and checklists that show the configuration for the Intuity system. For information on installing the Intuity system hardware, refer to *Intuity MAP/5 Hardware Installation,* 585-310-146, *Intuity MAP/40 Hardware Installation*, 585-310-138, or *Intuity MAP/100 Hardware Installation*, 585-310-139. For installing system software, refer to *Intuity Software Installation*, 585-310-140.

Switch integration refers to the sharing of information between a voice mail system and a switch in order to provide a seamless interface to callers and subscribers. A fully integrated voice mail system answers each incoming phone call with information taken directly from the switch. To create an integrated environment between an Intuity system and a ROLM 8000, 9000, or 9751 CBX, AT&T uses an electronic box called a Switch Integration Device (SID). The SID operates as a digital telephone set emulator, transferring calls to the Intuity system while sending integration information over an out-of-band serial data link. The SID converts ROLMphone™ 400 display set information into Simplified Message Desk Interface (SMDI) format and sends the SMDI information to the Intuity system. The SID does not restrict any switch features.

For the SID to perform integrated call transactions, the switch must include a properly configured ROLMphone 400 station set. The SID uses the ROLMphone 400 set to provide integration information to the Intuity system. The ROLMphone 400 connects to the SID through a standard ROLM telephone line cord. The SID connects to the Intuity system through an RS-232 cable called a DB-25 Centrex cable. Figure 1-1. shows the connections between the ROLM CBX, the SID, and the Intuity system.

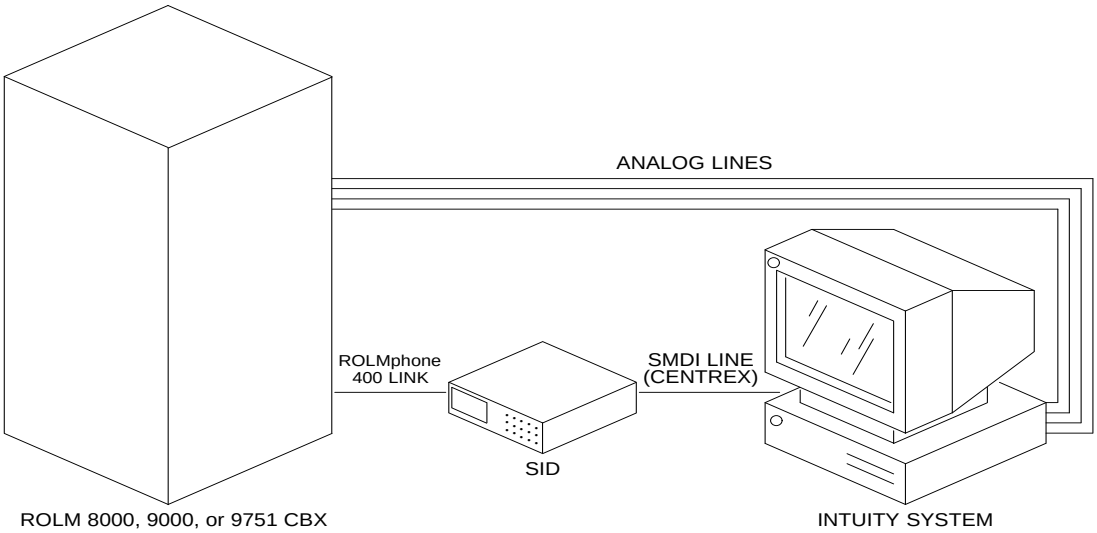

Figure 1-1. ROLM 8000, 9000, and 9751 Integration Hardware Connections

The SID emulates a ROLMphone 400 digital telephone set that communicates with the switch. Because the switch recognizes the SID as a digital station set, the SID's extension acts as the Intuity voice mail extension. When calls appear at the SID, the SID searches (hunts) for an open port on the voice mail system. After

finding an available port and sending the call along an analog line, the SID uses the switch call party information to create a Centrex SMDI packet and sends the packet to the Intuity system across the digital link.

The SID acts as the call traffic manager and does not require complex hunt groups or call distribution groups. Subscribers use the SID extension to access the Intuity system to retrieve messages. All covered and forwarded calls are sent to the SID's extension number and then the Intuity system. When the SID receives a **set** or **clear** command from the Intuity system, the SID uses the ROLM message center capability to provide subscribers with a stutter dial tone. The feature also lights message waiting lamps (MWL) if subscribers have MWLs on their telephone sets.

Before you connect the ROLM 8000, 9000, or 9751 CBX to the SID and the Intuity system, you must confirm that you have all required hardware and software integration components. Use the diagrams, checklists, and descriptions in this chapter to confirm that you have all required integration components.

Safety Considerations

CAUTION:
Electrostatic discharge damages electronic equipment. Do not touch any electronic component until you properly ground yourself.

To prevent damage to the equipment and yourself, follow these precautions:

- Familiarize yourself with the procedures necessary to prevent electrostatic damage to equipment.
- Shut off all power and remove all cables from equipment.
- Properly ground a work mat and wrist strap.
- Place the equipment on the work mat.
- Place the grounded wrist strap on your bare wrist. The wrist strap must contact your bare skin directly. *Do not* wear the wrist strap over your clothes.

Factory Assembled Systems

The factory performs assembly, load, and test (ALT) processes for most of the Intuity hardware and software before shipping the system to the site. Use the information in this chapter to confirm that the system contains the hardware and software for your configuration.

After checking the installed hardware and software, perform all tasks not completed during ALT, such as connecting the voice and data lines, setting up and cabling the peripherals, and installing the switch communications software. Use one of the following checklists to make sure you complete all necessary tasks:

- *Intuity MAP/5 Installation Checklist*, 585-310-147
- *Intuity MAP/40 Installation Checklist*, 585-310-137
- *Intuity MAP/100 Installation Checklist*, 585-310-141

Determining the Placement of the SID

The Switch Integration Device (SID) and the MAP computer represent *local* devices. Local devices must be located in the same physical area. Place the SID and the MAP computer in the same area and close enough together so the RS-232 cable supplied with the SID connects to the computer. During installation, the technician will place the SID and the MAP in the location specified by the customer. The SID is installed exactly like a ROLMphone 400 station set and requires the same components.

The link between the ROLM CBX and the SID uses a six foot ROLMphone telephone line cord. The SID must be installed within the local loop length limit for a ROLMphone 400 set. If the distance between the SID and the set is greater than the line cord reaches or the local loop length, the customer must consult with the ROLM CBX technical representative to determine the best method of connecting the switch to the SID. AT&T does not recommend any particular methods. AT&T assumes responsibility only for the RS-232 cable that connects between the SID and the Intuity system.

System Configuration

The Intuity system connects to the ROLM 8000, 9000, and 9751 CBX through a Switch Integration Device (SID). Figure 1-2. shows you the connections between the Intuity system and the CBX. Each component in Figure 1-2. contains a label. Table 1-1 following the diagram provides a name for each component in the diagram. Use Figure 1-2. and Table 1-1 to understand how the system components connect.

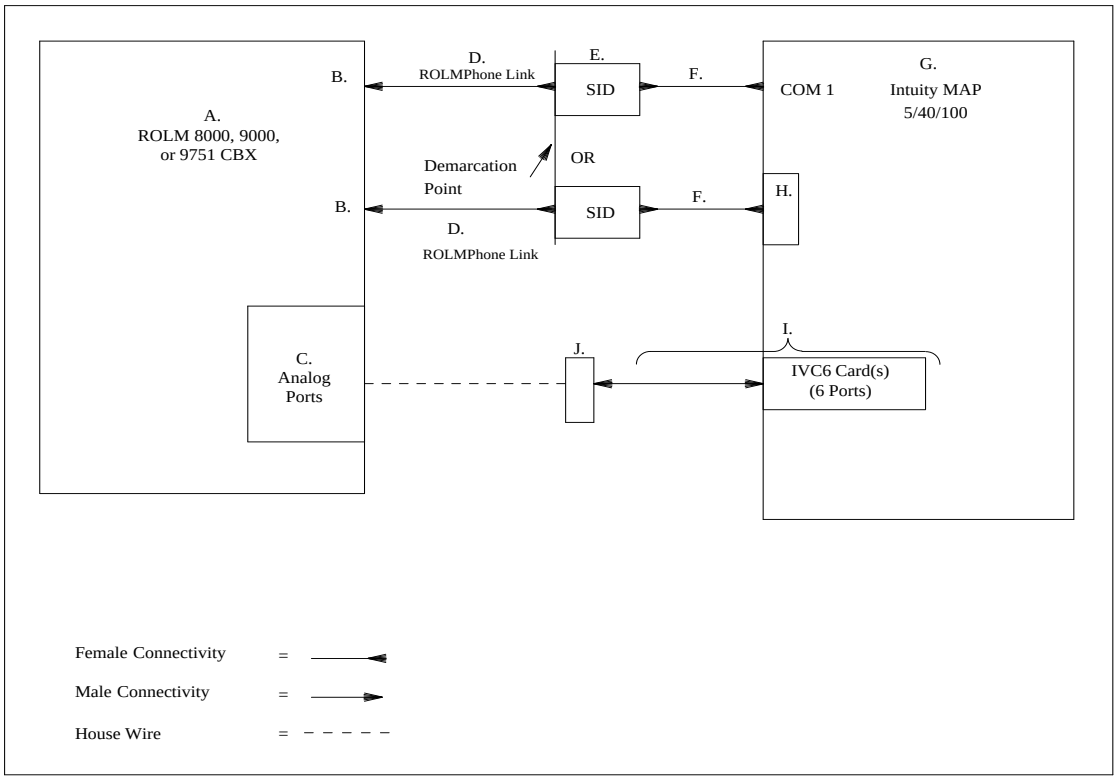

Figure 1-2. Connectivity Diagram for the ROLM 8000, 9000, and 9751 CBX (Single SID)

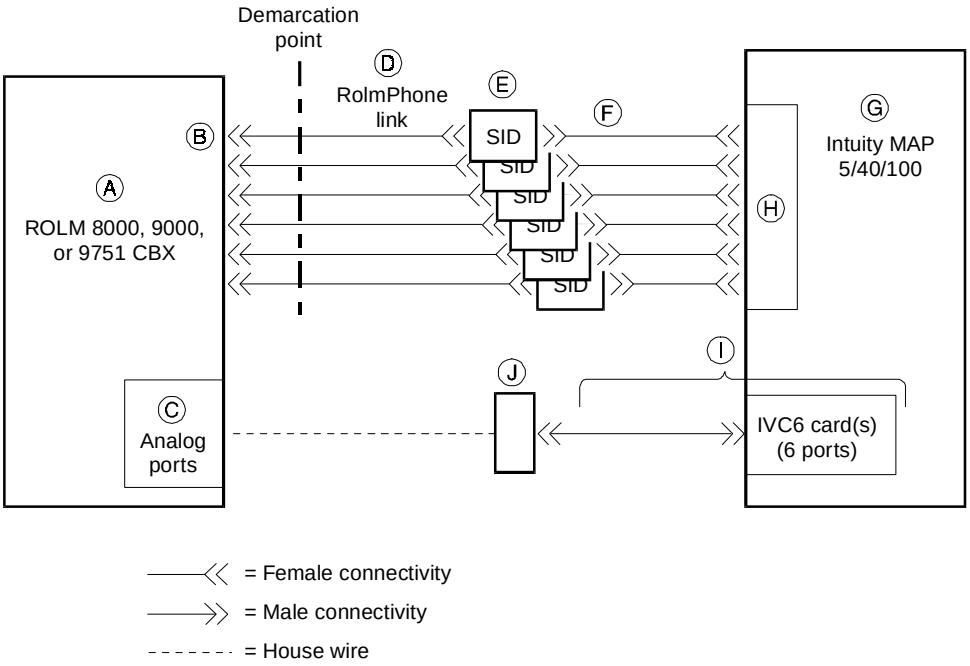

Figure 1-3. Connectivity Diagram for the ROLM 8000, 9000, and 9751 CBX (Multiple SIDs)

NOTE:
Multiple SID configurations require special administration on the switch and SID. Call your Remote Service Center for information on administering these configurations.

Table 1-1. Intuity System R3.0 Component List

Item #	Description	Item #	Description
A.	ROLM 8000, 9000, or 9751 CBX	F.	For COM1 connection (MAP5 only),RS-232 cable (DB-25) used to connect the SID to the Intuity system- includes 25-pin to 9-pin adapter (DB-9) For Equinox (DTE) connection, RS-232 cable with 6-pin to 25-pin adapter. Up to 6 ports may be used, one port for each of up to 6 SIDs.
B.	Digital (ROLMphone) line port. Up to six ports (one per SID) may be required.	G.	An AT&T MAP/5, MAP/40, or MAP/100 system
C.	Analog line port	H.	Equinox multiport serial port board
D.	ROLMphone telephone line cord used to connect the SID to the CBX.AT&T only assumes responsibility for connecting the cord to the SID. Up to six cards (one per SID) may be required.	I.	1-11 Integrated Voice Processing (IVC6) cards, including any of the following: 885A adaptors and cables 25-ft. modular cords with 6-pin to 25-pin adapters Two high density cables, RJ21X, with a 356B adapter for T/R distribution
E.	Switch Integration Device (SID) including power cord. Up to six SIDs, (for up to 48 voice ports) are possible.	J.	1-4 103A Connect Block

Component Checklists

The checklists on the next few pages identify the components required for the Intuity system R3.0 to ROLM 8000, 9000, and 9751 switch integration. Compare the components that you have on site with the checklists to make sure you have everything required for the installation.

ROLM 8000, 9000, and 9751 CBX Hardware

The customer must provide the correct switch and related components. The customer should use this ROLM CBX component checklist to make sure that they have all required items before an AT&T technician arrives to install the system. The Intuity system integrates only with the following ROLM CBXs:

- ROLM 8003 or later series CBX
- ROLM 9000 series CBX
- ROLM 9751 series CBX

The ROLM integration with the Intuity system requires the ROLM switches to have the components and features shown in the following table.

Switch Type	Card Type	Model #	Description
ROLM 8000	RPI circuit pack	78011	RPI1 card for 8000 and 9000
		78012	RPI2 card for 8000 and 9000
	Analog circuit pack	85540	8 channel line interface for 8000 and 9000
	Analog OPS circuit pack	85691	OPS for 8000 and 9000
		85690	OPX for 8000 and 9000
	Message Waiting Card	75520	MWL line interface for 8000 and 9000
ROLM 9000	RPI circuit pack	78011	RPI1 card for 8000 and 9000
		78012	RPI2 card for 8000 and 9000
	Analog circuit pack	85540	8 channel line interface for 8000 and 9000
	Analog OPS circuit pack	85691	OPS for 8000 and 9000
		85690	OPX for 8000 and 9000
	Message Waiting Card	75520	MWL line interface for 8000 and 9000
ROLM 9751	RPI circuit pack	90678	RLI card for 9751
	Analog circuit pack	90666	Analog Telephone Interface (ATI) for 9751
	Analog OPS circuit pack	90618	OPS 9751
	Message Waiting Card (for stations with neon lamps)	90502	MWL line interface 9751

NOTE:
The RPI circuit pack for the 8000 and 9000 consists of two cards, the RPI1 and the RPI2. You must have both cards to create a set of RPI ports. On the 9751 CBX, a single ROLM Link Interface card (RLI) performs the same action.

Analog OPS and OPX cards provide *wink off* upon disconnect.

Switch Integration Device Hardware

- Switch Integration Device (SID) including power cord
- RS-232 cable (DB-25) used to connect the SID to the Intuity system -includes 25-pin to 9-pin adapter (DB-9)
- ROLMphone telephone line cord used to connect the SID to the CBX. AT&T only assumes responsibility for connecting the cord to the SID.

Switch Integration Device Basics

2

Before you attempt to operate and administer the Switch Integration Device (SID) and integrate a ROLM 8000, 9000, or 9751 series CBX with an Intuity system, you need to understand the hardware components of the SID and how to use the device. The information in this chapter explains the basic components of the SID and how to use the system "forms" or screens.

The chapter covers the following topics.

- SID hardware component descriptions
- SID hardware component illustrations
- Menu screens
- Edit screens
- Action screens
- Help functions

Read the information in this chapter to understand the SID hardware and software.

The Switch Integration Device Hardware

Before you use the SID, you need to understand each hardware component. Read the descriptions below of each component and refer to Figure 2-1. to locate the component.

Front Panel

LCD display	A two-line, 40-character, backlighted LCD display screen used to show all menus and information on the SID.
Diagnostic lights	LED lights used to indicate and trace possible problems in the SID. The LEDs help to determine if problems exist in the SID, the link to the PBX, the link to Intuity, or any combination of the different links or systems. The Status LED lights when you power on the SID.
Keypad	A 19-key, membrane-style keypad used to select menu items, enter information, and perform all administration on the SID. The keys include ten numbered keys (0-9), four directional arrow keys, a pound sign (#) key, a star key (*), a Function key, a Mode key, and an Enter key.

"Chapter 9, Switch Integration Device Administration", of this document contains tables that show the function of each key, if different than marked.

Rear Panel

Power switch	The toggle switch used to turn the SID on and off.
Power cord outlet	The male outlet where you plug in the power cord shipped with the SID.
Link A and Link B	Two RS-232 ports used to connect the SID to the PBX and the Intuity system. "Chapter 4, Hardware Installation" of this document explains the proper connections for the two ports.
Modem port	The SID contains an internal modem used for diagnostic and software upgrade purposes. Use the modem port to connect the SID's modem to an analog line.

Continue to the next section, The Switch Integration Device Software on page 2-4, for an explanation of how to use the SID displays and menus.

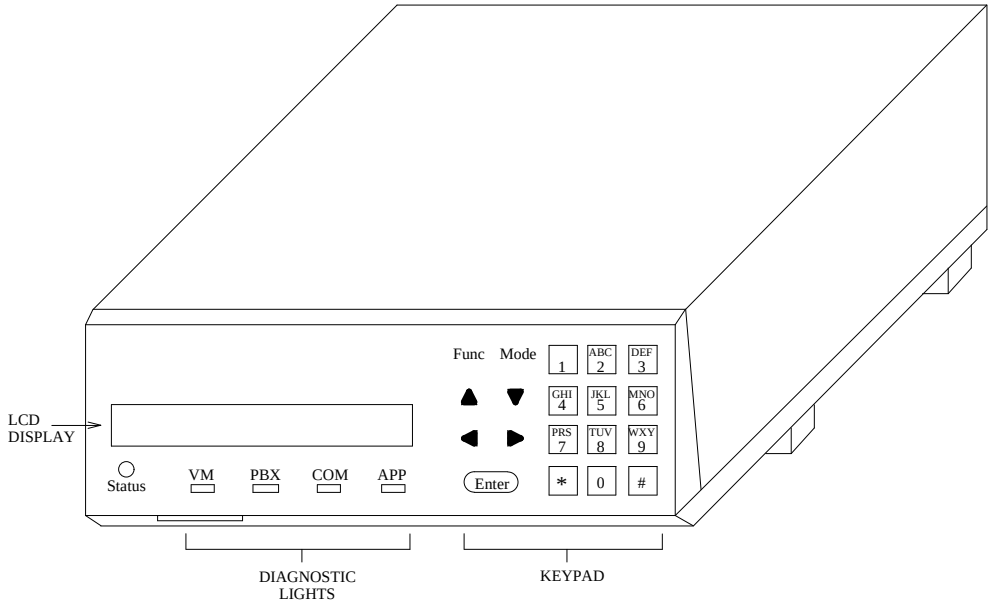

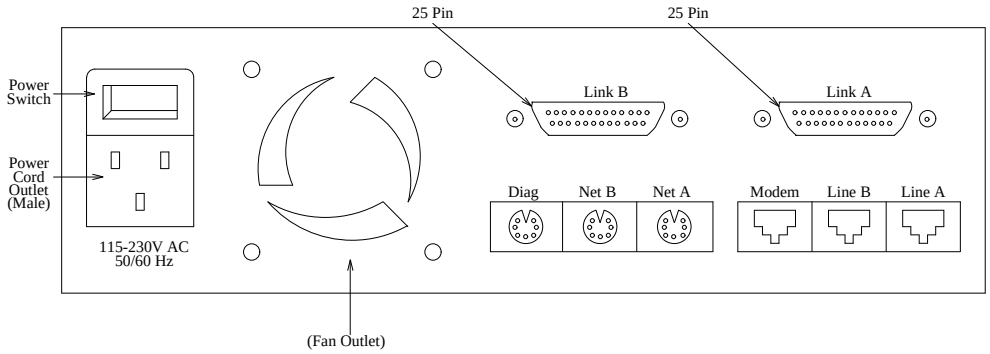

Figure 2-1. Top: SID Front Panel Bottom: SID Back Panel

The Switch Integration Device Software

The SID contains software that allows you to perform installation, configuration, and diagnostic tasks by using the keypad and the LCD screen. As you administer the SID, you use three types of screens or screen displays. Each type of screen has a specific task.

- Menu screens — Used to select one of several options.
- Edit screens — Used to enter information into the SID's configuration.
- Action screens — Used to perform an action, view event logs, or monitor the system.

This section contains descriptions and examples of each screen and provides you with instructions for using the screens. You also can find tables that show you valid key actions for each screen.

Menu Screens

Menu screens allow you to select options by pressing a key. You can select another menu, an edit screen, or an action screen. The menu screens allow you to move between important screens by pressing only a few keys. Figure 2-2. shows you the ROLM User Interface Main Menu.

```
ROLM        1-View        2-Utils       3-System

            4-Setup       5-Logs        6-Diags
```

Figure 2-2. The ROLM User Interface Main Menu

A menu screen contains two items:

Name	You can find the menu name in the upper left hand corner of the LCD display. Use the name as a reference item.
List of options	Menus show you different options. Each option has a number and a label. Not all menus contain the same number of options. To select an option from a menu, press the option number on the keypad. The SID clears the current screen from the LCD display and places the screen you selected on the display. The label you selected appears as the name of the screen.

Example: If you wanted option 4, Setup, from the ROLM User Interface Main Menu shown in Figure 2-2., press ***4*** on the keypad. After you press ***4***, you see the Setup screen appear on the screen as shown in Figure 2-3.

```
SETUP      1-Params        2-Ports     3-Clear
           4-Advanced
```

Figure 2-3. The Setup Screen

The SID uses menus to organize all options and functions into categories. Menus also permit the user to navigate easily through the screens by pressing one or more keys.

Each type of screen requires you to use different keys on the keypad to make selections and enter information. The table below shows you what keys to use with the menu screens.

Key	Action
1,2,3,4,5,6,7,8,9,0	Select menu option
*,#	No action
Func	Return to main menu
Mode	No action
Arrows	No action
Enter	No action

Edit Screens

Edit screens allow you to use the keypad to enter information into the SID's configuration. There are three types of edit screens:

- Single Item
- Two Item
- Scroll Item

This section contains descriptions and examples of each type of edit screen and provides you with instructions for using the screens.

Single Item Edit Screens

On a Single Item Edit screen, you must enter one piece of information or answer one question. Figure 2-4. shows you an example of a single item edit screen, the Setup screen. On the screen, you need to enter the number of ports assigned to the Intuity system. In this example, you enter the appropriate value using the digits on the keypad and press (ENTER).

```
SETUP      Number of Ports              ------
```

Figure 2-4. The Setup Screen

Two Item Edit Screens

Two Item Edit screens ask two related questions. After you answer the first question and press (ENTER) , the cursor moves to the second line. You must now enter information for the second question. When you press (ENTER) the second time, the cursor *wraps* or moves back to the first line. If you have entered all information correctly, press (▲) or (▼) to move to the next edit screen. You can press (FUNC) to return to Main Menu. If you did not enter the information correctly, you can change the information until you have everything correct. Figure 2-5. shows you the VM Port screen, an example of a two item edit screen.

```
VM Port 1      LTN:                         0001

               Extension:                   ------
```

Figure 2-5. The VM Port Screen

Scroll Item Edit Screens

Scroll Item Edit screens ask questions that have a limited number of answers. The SID places a default value in the field, but allows you to "scroll" or search through the options. Use the left and right arrow keys on the keypad to scroll through the options. Figure 2-6. shows you a sample scroll item edit screen, the Centrex Baud Rate screen.

```
CENTRX Baud Rate:                1200

<-   ->
```

Figure 2-6. The CENTREX Baud Rate Screen

In the example, you use the Centrex Baud Rate screen to set the baud rate for the Centrex link. You can set the baud rate to specific values between 300 and 9600 baud. On the screen you see a default value of 1200. To see the other options, you press the left arrow key to decrease the baud rate or press the right arrow key to increase the rate. When you find the rate you want, press ENTER to confirm your choice. You can recognize scroll item edit screens by the small arrow symbols (<- ->) shown below the screen name.

Edit Screen Keys

Edit screens require you to enter data for SID setup and configuration. Most edit screens have default values already entered on them. If you choose to use the default value, press FUNC to exit the screen. As you edit screens, you can move to the next or previous edit screen, return to the main menu, or access a help screen. Refer to the table below for a list of keys and the action each key performs.

Key	Action
1,2,3,4,5,6,7,8,9,0	Data entry keys
*,#	Data entry keys
Func	Return to main menu
Mode	Help
Up Arrow	Go to previous edit screen
Down Arrow	Go to next edit screen
Right Arrow	Get higher value
Left Arrow	Get lower value
Enter	Confirm entry, move to next field

With some menu selections, you can access multiple edit screens that link together. When you access multiple edit screens, press ▼ to move to the next screen or press ▲ to move to the previous screen.

Edit Screen Help Functions

Edit screens allow you to actively access help screens. To access the help screen, press MODE at any edit screen. The SID places the help screen on the LCD display. The SID retains any information you may have entered on the edit screen and places the edit screen with your information back on the display

when you exit the help screen. You do not lose any information. Most help screens appear as shown in Figure 2-7., although certain edit screens add or delete options.

```
EDIT        1-Overtype    2-Insert        3-Clear

            4-Undo
```

Figure 2-7. Help Screen Options Accessed from an Edit Screen

The following list shows you each available option and explains the action of each option shown on the help screen.

Overtype	The option places the editor into a mode that allows you to enter new characters over existing characters.
Insert	The option changes the editor into a mode that allows you to insert new characters between existing characters.
Clear	The option erases all characters in the field.
Undo	The option replaces any new information typed in the field with information from the stored configuration.

Action Screens

Action screens provide you with a "window" or a view into the integration application.

With action screens, you can monitor the application activity, review event logs, or check statistical information. Figure 2-8. shows a sample action screen, the Statistics View screen.

```
VW_STA      Calls:  1024  Inc:  45    Abnd:  123

            MWIs:  0988   Inc:  12    Q:  234-06%
```

Figure 2-8. The Statistic View Action Screen

Action screens operate in a dynamic or real-time mode. The screen changes with each transaction processed by the SID. When you finish observing an action screen, press FUNC to return to the main menu. You also can press MODE to access any available help options for the action screen. Although not all action screens have help options, by pressing MODE you usually can find optional ways to look at the information presented on the action screen.

All action screens use the same keys on the keypad to perform functions and make selections. The table below shows you what keys to use with the action screens.

Key	Action
1,2,3,4,5,6,7,8,9,0	No action
*,#	No action
Func	Return to main menu
Mode	Help for Action Screen
Arrows	No action
Enter	No action

You have read the basic information necessary to integrate the Intuity system to a ROLM 8000, 9000, or 9751 series CBX. Proceed to "Chapter 3, Switch Integration Planning", to plan the switch integration and prepare for the installation and administration procedures.

Switch Integration Planning

3

Before you implement the ROLM CBX integration with the Intuity system, you must plan the process. This chapter provides worksheets and information to help you plan and record the integration.

By completing the worksheets you collect the following information:

- Number of voice mail ports
- Message desk number
- Extension length
- Calling party identification pad string
- Message waiting indicator pad string
- Message waiting indicator features
- Simplified message desk interface baud rate
- Extensions/logical terminal number plan

Continue with the instructions on the next page to plan the switch integration.

Determine the Number of Voice Mail Ports

You must specify the number of voice mail ports for the Switch Integration Device (SID) to support and monitor. The number of ports for the SID is the same as the number of ports assigned to the integrated services on the Intuity system. To determine the number of voice mail ports the SID must support, count the total

number of ports assigned to the CA+VM and CA+VM+AA services. Refer to Chapter 5 of the *Intuity New System Planning*, 585-310-603, for a list of the services assigned on the Intuity system.

The ROLM 8000, 9000, and 9751 CBXs support a maximum number of 20 lines. After you determine the number of voice mail ports you need to assign on the SID, write the number on line 1 of Worksheet A: Switch Integration Information.

Worksheet A: Switch Integration Information

Line #	Field or Feature Name	Value	Default
1.	Number of voice mail ports:	_____	_____
2.	ROLM COS #:	_____	00
3.	RPI PAD:	_____	--
4.	Feature Configuration Table:	_____	--
5.	Message Desk Number:	001	001
6.	Extension Length	_____	3
7.	CPID Pad String Number:	_____	0000xxx
8.	MWI Pad String Number:	_____	0000xxx
9.	MWI Feature: (ENABLE = on, DISABLE = off)0	_____	ENABLE
10.	SMDI Baud Rate:	_____	1200
11.	MWI Interleave:	5	5
12.[a]	Message Waiting On: Message Waiting Off:	_____ _____	*4 #4
13.	Call Sequence:	Call/Data	Data/Call
14.*	Hunt Group:	_____	_____

a. This field is for use on future switch releases.

Select a Class of Service

During the ROLM CBX administration, you must configure a Class of Service (COS) for the integration. The COS determines the availability of features to an extension. The COS configured for and assigned to the Intuity system must have the following features set:

- Feature 3, Private Call (PRV), enabled
- Feature 9, Do Not Disturb (DND), disabled
- Feature 13, No Flash Allowed (NFL), disabled
- Feature 17, No Howler if Left Off-Hook (NOH), enabled

Try to use a COS not currently assigned on the ROLM CBX. If all COS are assigned, use a COS that has the required features set. Once you determine the COS number that you plan to use for the Intuity system, write the number on line 2 of Worksheet A:. If you plan to use the default, you must check the administration of the default COS as outlined in "Chapter 7, ROLM 8000 CBX Administration", or "Chapter 8, ROLM 9000 and 9751 CBX Administration". If you have a problem determining a COS for the application, contact the ROLM switch vendor.

Determine the RPI Port Address

Before you can administer the ROLMphone 400 emulation on the ROLM CBX, you must determine the ROLMphone Interface (RPI) Port Address (PAD) number. The RPI serves as the basic digital port used by ROLMphone digital sets. Any ROLM CBX with version 8003 software or greater should have standard support for the ROLMphone 400. To determine the RPI PAD number, consult with the ROLM switch vendor or system administrator. Once you determine the RPI PAD number that you plan to use for the connection to the SID, write the number on line 3 of Worksheet A:.

Determine the Feature Configuration Table

The Feature Configuration Table contains all of the configuration information for the ROLMphone 400 emulation including the line appearance extensions, the busy indicators, and the feature keys. Before you can administer the ROLMphone 400 emulation, you must find an unused Feature Configuration Table. Use the **LFC RP400** command to find the number of an unused Feature Configuration Table. Consult with the ROLM switch vendor or system administrator for assistance in determining the table number. Once you determine the Feature Configuration Table number, write the number on line 4 of Worksheet A:.

Select the Message Desk Number

The Simplified Message Desk Interface (SMDI) message desk number must match the number assigned on the voice mail system. For the Intuity system, use the default value assigned to the SID. The default value is 001. Line 5 of Worksheet A: already contains the value 001 as the message desk number.

Select the Extension Length Number

The CPID and MWI extension length fields must match the extension length assigned on the switch. The SID defaults to an extension length of 3. The extension length is used with the CPID and MWI pad strings. If your switch has a different extension length number, enter that number on line 6 of Worksheet A:.

Select the CPID Pad String

The SID retrieves calling and called party information identical to the display information provided at the ROLMphone 400 set. The SID operates on Simplified Message Desk Interface (SMDI) protocol which uses a seven-digit field. To compensate for the difference between the protocols, the SID uses a seven-digit string, called the Calling Party Identification Pad (CPID) string, that the SID overwrites with caller identification information. For example, if the CPID pad string is 0000xxx and the SID receives a caller ID of 245, the SMDI caller ID information becomes 0000245.

The SID assigns the field a default value of 0000xxx which matches the default extension length. When you change the extension length, the SID automatically updates the CPID pad string number. If you change the default extension length number, write the correct CPID pad string on line 7 of Worksheet A:.

Select the MWI Pad String

The Message Waiting Indicator (MWI) Pad String operates on the same basis as the CPID Pad String. As with the CPID Pad String, the SID uses a seven-digit string, called the Message Waiting Indicator (MWI) pad string, that informs the SID about the format of MWI information generated by the Intuity system. The SID uses the MWI pad string to strip off digits not required by the ROLMphone 400. The SID assigns a default MWI pad string of 0000xxx. If you change the default extension length number, write the correct MWI pad string on line 8 of Worksheet A:.

Select the Message Waiting Indicator Feature

By using the MWI feature, you can allow the Intuity system to activate message waiting lamps. The SID sets the default value for this field to ENABLE, which activates the MWI feature. If you do not want the Intuity system to activate the MWIs, change the field to DISABLE. Write the value on line 9 of Worksheet A:.

Determine the SMDI Baud Rate

You must set the baud rate for the Simplified Message Desk Interface (SMDI) link. The SID provides baud rate selections of 300, 1200, 2400, and 9600 baud and sets a default of 1200 baud. Write the SMDI link baud rate on line 10 of Worksheet A:. If you plan to use the default setting, write 1200 on the worksheet.

Determine the MWI Interleave Factor

The SID normally processes incoming calls before processing an MWI. When the system is busy, MWI packets back up on the system. Use the MWI interleave factor to force the SID to process MWI packets on busy systems. The interleave factor instructs the SID to process a single MWI after *n* calls. The SID uses a default setting of 5. For the Intuity system, use the default setting. Line 11 on Worksheet B: already contains the default value.

Message Waiting On/Off

Leave this field blank.

Determine the Call Sequence

Use the field to indicate the order in which the call and SMDI information are sent to the Intuity system. The SID is configured with the sequence Call/Data. Use the default value as shown on Line 12 of Worksheet B:.

Hunt Group

Leave this field blank.

Determining the Extension/LTN Plan

The Intuity system receives speech from the switch over analog channels, also called voice ports. Each channel has an assigned service on the Intuity system. For example, if a subscriber calls the Intuity number and accesses voice mail, the subscriber dialed an extension for a channel connected to the voice mail service.

On the Intuity system, you assign an extension to each channel to allow for switch communications. For the SID application, you associate a Logical Terminal Number (LTN) with each analog extension number used by the Intuity system. For example, if an Intuity system assigns channel 0 to extension 2222, you assign LTN 1 (0001) to the extension.

Assigning the LTN to an extension tells the SID where to send information for the extension. If you do not assign the LTNs, the SID does not integrate calls properly.

NOTE:
The Intuity system uses 0 as the first channel number assigned to an extension. The SID assigns 1 as the first LTN assigned to an extension. As you assign channels and LTNs, the number is always one greater than the Intuity assigned number.

Chapter 5 of *Intuity New System Planning* (585-310-603), contains a PBX worksheet that lists each channel number and the extensions assigned to the channel. Use the information recorded on the PBX worksheet as you complete the switch administration procedures in this document. Worksheet B: provides a space for the channel extension and lists the LTN number. Copy the channel extension from the planning document onto Worksheet B:.

Worksheet B: Extension/LTN Plan

Analog Voice Port (Channel) Extension	LTN LTN	Analog Voice Port (Channel) Extension	LTN LTN
_____	0001	_____	0007
_____	0002	_____	0008
_____	0003	_____	0009
_____	0004	_____	0010
_____	0005	_____	0011
_____	0006	_____	0012

NOTE:
LTN defaults can be overridden. In addition, up to 20 ports are actually available.

Determine Pilot and Call Appearance Extensions

The pilot number is the extension number assigned to the SID. Intuity system subscribers dial the pilot number to access their voice mail. If the pilot number is busy, the SID "hunts" or searches through eight keys or "call appearances" to use to complete the call. The pilot number serves as the extension number that the CBX associates with the ROLMphone 400 set.

For the Intuity system ROLM CBX integration to work, you need to determine the pilot number for the SID. You also need to determine the call appearances for the ROLMphone 400 emulation.Write the Intuity phone number of switch group extension onto line 1, Pilot Number, on Worksheet C:.

When selecting the eight line or call appearance extensions, select eight sequential extensions not currently assigned on the CBX. For example, you determine that you want to use 400 as the first call appearance. Assign 401, 402, 403, 404, 405, 406, and 407 as the remaining extensions. Write the call appearance extension numbers on lines 2 through 9 of Worksheet C:.

Worksheet C: Pilot Number and Call Appearances for the Integration

Line #	Extension Type	Extension
1.	Pilot Number:	_____
2.	Call Appearance:	_____
3.	Call Appearance:	_____
4.	Call Appearance:	_____
5.	Call Appearance:	_____
6.	Call Appearance:	_____
7.	Call Appearance:	_____
8.	Call Appearance:	_____
9.	Call Appearance:	_____

NOTE:
Call appearances are equivalents to call appearances on a Rolmphone. The pilot number is the equivalent of a hunt group number.

Test Subscriber Extensions

To perform the acceptance test procedures, you must administer two test subscribers on the switch. Record the test subscriber names and extensions on lines 1 and 2 of Worksheet D: Test Subscriber Information.

Worksheet D: Test Subscriber Information

Line #	Information Type	Value
1.	Test subscriber 1 extension:	_____
	Test subscriber 1 name:	
2.	Test subscriber 2 extension:	_____
	Test subscriber 2 name:	

Hardware Installation

4

This chapter describes the hardware and cable installation tasks required to integrate the ROLM 8000, 9000, or 9751 series CBX with an Intuity system through a switch integration device (SID).

Before you perform the tasks in this chapter, complete the instructions in the appropriate document:

- *Intuity MAP/5 Hardware Installation*, 585-310-146
- *Intuity MAP/40 Hardware Installation*, 585-310-138
- *Intuity MAP/100 Hardware Installation*, 585-310-139

For an Assembly, Load, and Test (ALT) system, you may not need to perform the steps in the other documents.

Use the appropriate hardware installation checklist (for MAP5, MAP40, or MAP100) to verify that all other Intuity system hardware has been installed and continue with the instructions in this chapter.

This chapter covers the installation of all CBX integration-related hardware components. The tasks must be performed by the installation technician, the customer, or the customer's switch vendor. Each task provides an explanation of who should perform the task. If you do not know the hardware components required for the integration, refer to "Chapter 1, Introduction and Requirements for Integration", of this document for more information.

The hardware installation tasks covered in this chapter include:

- Connecting the analog line to the SID modem

- Connecting the ROLM line cord to the switch
- Connecting the ROLM line cord to the SID
- Connecting the cable from the SID to COM1

Continue with the instructions on the next page to install the hardware.

Task 1: Connect an Analog Line to the Modem

The SID contains an internal modem that allows for remote site access and maintenance. You must connect an analog line from the switch to the modem. This task should be performed by the installation technician and the customer or the customer's switch vendor. The customer or the customer's switch vendor should connect the analog line to the switch before the installation technician arrives.

Use the following procedure to connect the analog line to the modem.

1. Connect the analog line to the MODEM port on the SID, as shown in Figure 4-1.

Proceed to Task 2: Connect the SID to the ROLM CBX .

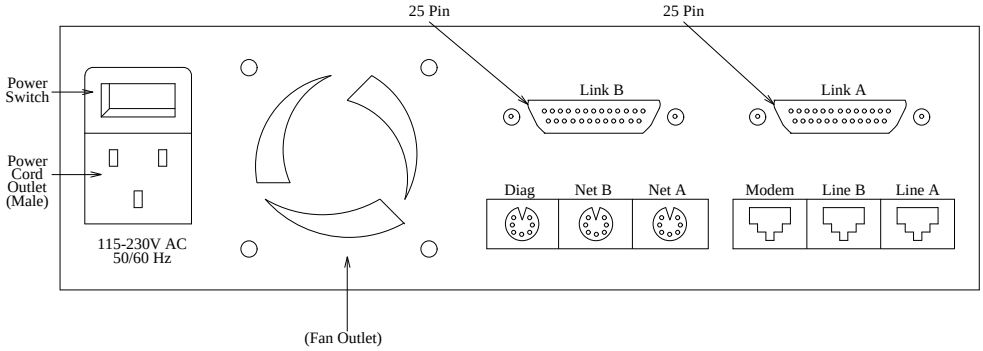

Figure 4-1. Back View of the SID

Task 2: Connect the SID to the ROLM CBX

The customer or the customer's switch vendor must complete this task. AT&T does not assume responsibility for any connections to the ROLM switch.

The SID connects to the switch exactly the same as a ROLMphone 400 digital station set connects to the CBX. The ROLM CBX communicates with the SID through a standard six-foot telephone line cord. If you need a cord longer than the one shipped with the SID, you must supply the cable.

Use the following instructions to connect the SID to the ROLM switch.

1. Connect one end of the six foot ROLM telephone line cord to the RJ-45 outlet labeled Line A on the back of the SID. Use Figure 4-1. to locate Line A.
2. Connect the free end of the cord into the wall outlet that connects to the ROLM CBX.

Proceed to Task 3: Connect the SID to the Intuity System .

Task 3: Connect the SID to the Intuity System

This task requires you to connect the 10-foot DB-25 Centrex cable to the SID and to the Intuity computer and should be completed by the AT&T installation technician. The cable connects to the Intuity computer through a DB-25 to DB-9 adaptor.

Use the following procedure to connect the cable.

1. Connect one end of the DB-25 connector to LINK A on the back of the SID. Figure 4-2. shows you the location of LINK A.
2. Attach the DB-9 adaptor to the free end of the DB-25 cable.
3. Connect the 9-pin connector to the COM1 port on the Intuity system computer.

Proceed to Task 4: Connect the SID Power Cord .

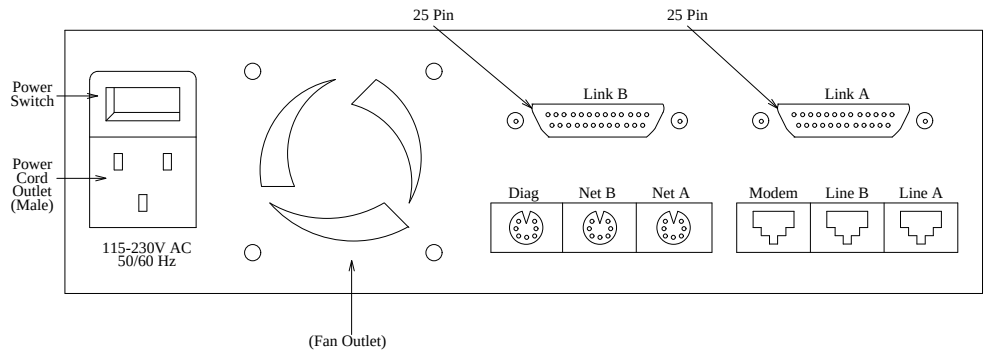

Figure 4-2. Back View of the SID

Task 4: Connect the SID Power Cord

The installation technician or the customer must complete this task.

1. Plug the female end of the power cord into the AC power-in socket on the SID as shown in Figure 4-2.
2. Plug the male end of the power cord into the AC outlet provided by the customer.
3. Locate the power switch on the back of the SID, shown in Figure 4-2.
4. Toggle the power switch to the *ON* position.

   When you turn on the power switch, the Status LED on the front of the SID illuminates.

You have completed the hardware installation steps required for the ROLM 8000, 9000, or 9751 series CBX integration. Proceed to "Chapter 5, Installing SID Software on the Intuity System", in this document.

Installing SID Software on the Intuity System

5

This chapter provides procedures for installing the SID software on the Intuity system.

NOTE:
Before you install the SID software, make sure that the voice system and maintenance software are installed. Also, ensure that no other switch software is already installed.

To install the SID software, perform the following 4 procedures:

1. Stop the voice system.
2. Load the SID software.
3. Start the voice system.
4. Turn on Intuity AUDIX transfer feature.

Each of these procedures is described in the following sections.

Requirements

Before you install the SID software, note the following requirements:

Login:	craft
Materials:	SID Switch Integration Software (2 floppy disks)

Stop the Voice System

Before you can load the SID software, you must stop the voice system.

CAUTION:
All calls in progress will be disconnected.

Use the following procedure to stop the voice system.

1. Login as **craft**.
2. Press [ENTER] to accept the AT386 default.

   You see the Intuity Administration menu.
3. Select the following series of menu options:

   > Customer/Services Administration
   > System Management
   > System Control
   >Stop Voice System

   After you select the last option, Stop Voice System, you receive the following message:

   ```
   Enter y to continue, n to quit.
   ```

4. Enter **y** to begin the process.

   Before stopping the voice system, the system pauses until all calls in progress disconnect. During the pause, you see a series of messages.

   When all calls have disconnected, you receive the following message:

   ```
   The Voice System has stopped
   Press ENTER to continue...
   ```

5. Press [ENTER].

   The system returns you to the System Control menu.
6. Press [CANCEL] until you see the Intuity Administration menu.

   You are now ready to load the SID software, as described in the next section.

Load the SID Software

1. Starting at the Intuity Administration menu, select the following series of menu options:

> Customer/Services Administration
>
> >System Management
>
> >>UNIX Management
>
> >>>Software Install

After you select the last option, you see the Software Install menu, as shown in Figure 5-1.

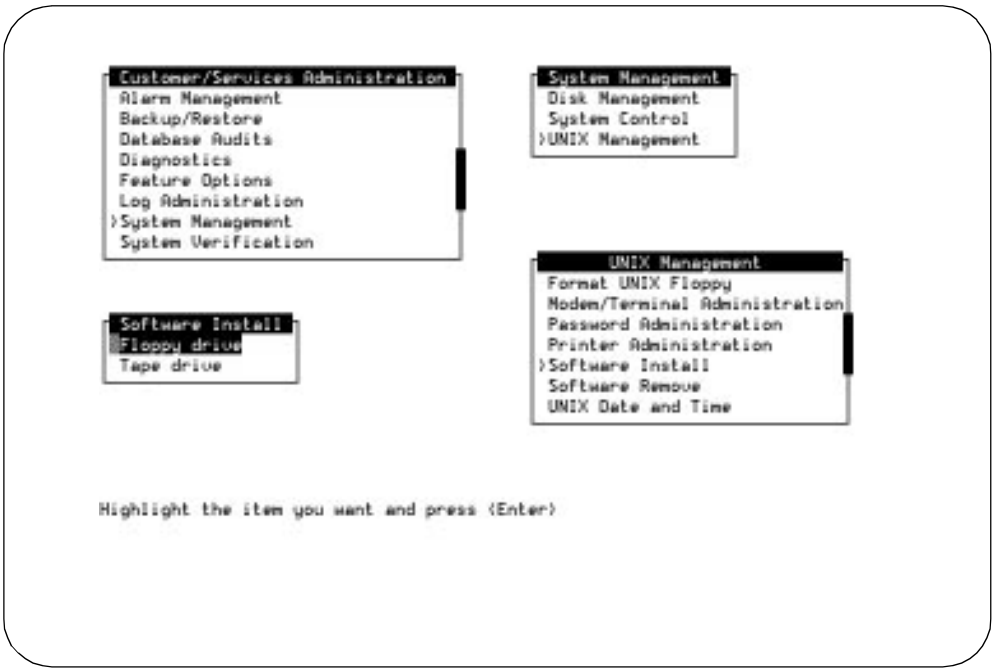

Figure 5-1. Software Install Menu

2. Select **Floppy drive** from the Software Install menu.

   The system responds:

   ```
   Insert diskette into Floppy Drive 1.
   Type [go] when ready
       or [q] to quit: (default: go)
   ```

3. Insert SID Switch Integration Package Disk 1 of 2 into the 3.5” floppy drive.

4. Press ENTER to install the software.

   The system responds:

   ```
   Installation in progress. Do not remove the diskette.
   ```

   ```
   The following packages are available:
        1    sid   Intuity SID Switch Integration Package
                     (486) 1.0-16
   ```

   ```
   Select package(s) you wish to process (or ‘all’ to
   process all packages). (default: all)  [?, ??, q]
   ```

5. Press ENTER to accept the default of all.

   You will see a series of messages indicating that the software is being installed including a copyright statement. The system pauses at the following prompt:

   ```
   Select type of switch:

        1) NEAX
        2) ROLM
        3) MITEL
        4) NORTHERN
        5) QUIT

   Enter Selection:
   ```

6. Enter **2** to select ROLM. You receive the following confirmation message:

   ```
   Confirm:  You selected option 2.  (y/n)
   ```

7. Enter **y** to select yes. The installation continues. The system pauses when you see the following prompt:

   ```
   Insert diskette 2 of 2 into Floppy Drive 1.
   Type [go] when ready
       or [q] to quit: (default: go)
   ```

8. Remove Disk 1 of 2 from the floppy drive.

9. Insert Disk 2 of 2 into the floppy drive.

10. Press ENTER to continue the installation.

    Following several screen messages, you see the Switch Link Administration screen as shown in Figure 5-2. The screen contains the system defaults that are automatically set when you load the software.

```
                    Switch Link Administration

 Data link test number : 700000000

                          Baud
   Serial port            rate    Comment


Press CHOICE for a list of serial ports

1 HELP  2CHOICES  3 SAVE  4PREV-FRM 5NEXT-FRM 6 CANCEL  7        8CHG-KEYS
```

Figure 5-2. Switch Link Administration Screen with System Defaults

11. Use Table 5-1 to enter the correct values in each field on the Switch Link Administration screen.

Table 5-1. Switch Link Administration Screen Entries

Field	Description
Data link test number	Indicates the test number sent to the switch to verify whether the switch is active. Setting: 5551212.
Serial port	Indicates which port on the multi-port circuit card in the Intuity system is connected to the integration device. Setting: Press CHOICES (F2) to choose from a menu of available ports. Settings are in the format /dev/ttysa*x,* where *x* is a letter a - h representing a port on the circuit card (from right to left). AT&T recommends that you use **/dev/ttysaa** as the serial port.
Baud rate	Indicates the rate at which the SID and the Intuity system communicate. Setting: A baud rate of 1200, 2400, 4800, or 9600. Press CHOICES (F2) to choose from a menu of possible settings. This setting must agree the BAUD setting on the SID. AT&T recommends that you use a baud rate of 2400.
Comment	Use the field to enter a comment. Enter a maximum of 30 characters. In your comment, do not use double quotation marks (“) or SHIFT + backslash (\).

12. Press SAVE (F3).

    After you press the key, you receive a confirmation message as shown in Figure 5-3.. The message tells you that the serial port was registered successfully and that you need to start the voice system

```
Command output
Update Switch Interface Device output :

Register serial port /dev/tty00 successful

In order for the new Switch Link setup
to be effective, please restart the Voice System
```

Figure 5-3. Switch Link Administration Confirmation Message

13. Press CANCEL (F6).

    You see the Switch Link Administration screen.

14. Press CANCEL (F6) again.

    You see several messages indicating that the installation is still running. When the installation process finishes, you see the following messages:

    ```
    Installation of Intuity SID Integration Package (sid)
    was successful.
    ```

    ```
    Insert a diskette into Floppy Drive 1.
    Type [go] when ready
        or [q] to quit: (default: go)
    ```

15. Remove Disk 2 of 2 from the floppy drive.

16. Enter **q** to quit.

    The Software Install screen is redisplayed.

17. Press CANCEL until you see the Intuity Administration menu.

    Restart the voice system as described in the next section.

Start the Voice System

Restart the voice system for the Intuity system to accept and process calls. Use the following procedure to start the voice system.

1. Starting at the Intuity Administration menu, select the following series of menu options:

> Customer/Services Administration
>
> > System Management
> >
> > > System Control
> > >
> > > >Start Voice System

   You see messages indicating that the voice system is being restarted.

   When the process finishes, you see the following message:

```
Startup of the Voice System is complete
Press ENTER to continue...
```

2. Press [ENTER].

   You see the System Control menu.

3. Press [CANCEL] until you see the Intuity Administration menu.

Turn on Transfer Feature

After you install the Rolm software and restart the voice system, you need to turn on the transfer feature in Intuity AUDIX. For this procedure, see *Intuity AUDIX Administration*, 585-310-539, and set the transfer type field to *basic*.

Administering the Intuity System for the ROLM Integration

6

This chapter describes how to administer the Intuity system for integration with the Rolm switch. To integrate with the Rolm switch, the Intuity system needs to know specific information about how the integration is set up, such as the serial port and baud rate being used. To administer the Intuity system, you must complete the following screens:

- Switch Link Administration screen
- System Translation screen

Administering the Switch Link Administration Screen

During the Rolm software installation process, the values for the Switch Link Administration screen were administered. You need to change the default settings on this screen. Use the following procedure to change the settings.

1. Login as **craft**.
2. Press ENTER to accept the AT386 default.

You see the Intuity Administration menu as shown in Figure 6-1..

```
  INTUITY (TM) Administration
 AUDIX Administration
>Customer/Services Administration
 Networking Administration
 Switch Interface Administration
 Voice System Administration


Highlight the Item you want and press <Enter>
```

Figure 6-1. Intuity Main Menu

3. Select **Switch Interface Administration** from the Intuity Main Menu. After you select the option, you see the Switch Interface Administration menu as shown in Figure 6-2.

```
 Switch Interface Administration
>Switch Link Administration
 System Translation
```

Figure 6-2. Switch Interface Administration Menu

4. Select **Switch Link Administration** from the menu. After you select the option, you see the Switch Link Administration screen as shown in Figure 6-3.

```
                    Switch Link Administration

 Data link test number : 5551212

                        Baud
   Serial port          rate    Comment
/dev/ttysaa             2400    Port used for SID integration
```

Figure 6-3. Switch Link Administration Screen

5. Use Table 6-1 to enter the correct values in each field on the Switch Link Administration screen.

Table 6-1. Switch Link Administration Screen Entries

Field	Description
Data link test number	Indicates the test number sent to the switch to verify whether the switch is active. Setting: 5551212
Serial port	Indicates which port on the multi-port circuit card in the Intuity system is connected to the integration device. Setting: Press CHOICES (F2) to choose from a menu of available ports. Settings are in the format /dev/ttysa*x,* where *x* is a letter a - h representing a port on the circuit card (from right to left). AT&T recommends that you use **/dev/ttysaa** as the serial port.
Baud rate	Indicates the rate at which the SID and the Intuity system communicate. Setting: A baud rate of 1200, 2400, 4800, or 9600. Press CHOICES (F2) to choose from a menu of possible settings. This setting must agree the BAUD setting on the SID. AT&T recommends that you use a baud rate of 2400.
Comment	Use the field to enter a comment. Enter a maximum of 30 characters. In your comment, do not use double quotation marks (“) or SHIFT + backslash (\).

6. Press SAVE (F3).

   After you press the key, you receive a confirmation message as shown in Figure 6-4. The message tells you that the serial port was registered successfully and that you need to stop and restart the voice system.

```
Command output
 Update Switch Interface Device output :

Register serial port /dev/ttysaa successful

 In order for the new Switch Link setup
 to be effective, please restart the Voice System
```

Figure 6-4. Switch Link Administration Confirmation Message

7. Press CANCEL (F6) until you see the Intuity Administration menu as shown in the Figure 6-1.
8. Proceed to the next section, *Stopping and Restarting the Voice System*.

Stopping and Restarting the Voice System

To execute the changes you made on the Switch Link Administration screen, use the following procedure to stop and restart the voice system.

1. Starting at the Intuity Administration menu, shown in Figure 6-1., select the following series of menu options:

   > Customer/Services Administration
   > System Management
   > System Control
   >Stop Voice System

   After you select the last option, Stop Voice System, you receive the following message:

   ```
   Enter y to continue, n to quit.
   ```

2. Enter **y** to begin the process.

   Before stopping the voice system, the system pauses until all calls in progress disconnect. During the pause, you see a series of messages.

   When all calls have disconnected, you receive the following message:

   ```
   The Voice System has stopped
   Press ENTER to continue...
   ```

3. Press [ENTER].

   The system returns you to the System Control menu.

4. Select Start Voice System from the System Control menu.

   After you select the option, you receive a message indicating that the voice system is restarting. When the process finishes, you receive the following messages:

   ```
   Startup of the Voice System is complete
   Press ENTER to continue...
   ```

5. Press [ENTER].

   The system returns you to the System Control menu.

6. Press [CANCEL] until you see the Intuity Administration menu.

Administering the System Translation Screen

Use the following procedure to administer the System Translation screen.

1. Starting at the Intuity Administration menu, shown in Figure 6-1., select the following series of menu options:

> Switch Interface Administration

> System Translation

After you select the System Translation option, you see the System Translation screen as shown in Figure 6-5.

```
                        System Translation
 Switch link type: SMSI
 Host type: ROLM
 Host link ID: 1
 Extension length: 4

 Address Ranges:  first      / last        public network number
                1. 0000      / 9999        0000000
                2.           /
                3.           /
                4.           /
                5.           /
                6.           /
                7.           /
                8.           /

The length of extension is 3 to 7

1 HELP  2CHOICES  3 SAVE  4PREV-FRM 5NEXT-FRM 6 CANCEL  7        8CHG-KEYS
```

Figure 6-5. System Translation Screen

2. Use Table 6-2 to enter the correct values in each field on the Switch Link Administration screen.

Table 6-2. System Translation Screen Entries

Field	Description
Switch link type	The field contains the current switch link type. You cannot change this setting.
Host type	The field contains the current host switch type. You cannot change this setting.
Host link ID	The field contains the current host link ID. You cannot change this setting.
Extension length	The field indicates the number of digits allowed for each extension in the address range. Setting: Enter a number from 3 to 10.
Address Ranges: first Address Ranges: last Address Ranges: public network number	The fields indicate the first and last extension number in the address range and the public network number. Setting: Although this screen will accept up to eight address ranges, you should enter only one for the Rolm switch. This range must be appropriate for the dial plan administered on the switch. The first address must be all zeros and the number of digits must match the assigned Extension length. The last address must be all nines and the number of digits must match the assigned Extension length. The public network number must be as follows: ■ Seven digits long ■ Begin with zeros ■ End with the digits of the first extension number in the range. For an example, see Figure 6-5.

3. Press SAVE (F3) to save you entries on the screen.

   After you press the key, you see the Command Output screen as shown in Figure 6-6. The message indicates that the fields were updated successfully.

```
                    Command output
S  Update System translation output:
H
H  update extension length successful
E
   Update the nnx 0000,9999,0000000 successful
A                                                    er

   Press Cancel to leave this window

1 HELP  2PREVPAGE 3NEXTPAGE 4PREV-FRM 5NEXT-FRM 6 CANCEL  7        8CHG-KEYS
```

Figure 6-6. Command Output Screen

4. Press CANCEL (F6) until you return to the Intuity Administration menu.

You have completed the procedure required on the Intuity System.

ROLM 8000 CBX Administration

7

NOTE:
The information presented in this chapter represents guidelines for administering the ROLM CBX to integrate with an Intuity system. Each switch may have a different administration. The switch administration process should be performed by a trained ROLM technician. *AT&T services personnel will not administer the ROLM CBX.*

This chapter contains instructions for administering a ROLM 8000 Computerized Branch Exchange (CBX) to operate with an Intuity system. If you have a ROLM 9000 or 9751 CBX, use the instructions in "Chapter 8, ROLM 9000 and 9751 CBX Administration". If you have another type of switch, refer to the documentation provided with that switch or the switch integration package for more information. The instructions only explain the screen fields and information necessary for the integration.

Each procedure in this chapter uses examples to illustrate the instructions. All examples use standard information such as the pilot number, analog voice port extensions, and call appearance extensions. The examples use the following information.

- The SID uses a pilot extension of 500.
- Eight extensions, 551, 552, 553, 554, 555, 556, 557, and 558, will be created and administered on the ROLMphone™ keys. The extensions belong in the 500 hunt group.
- The Intuity system uses four analog voice ports (channels) numbered 501, 502, 503, and 504.

Use the examples only for illustration purposes. Refer to "Chapter 3, Switch Integration Planning", to find the correct information for your integration.

NOTE:
Multiple SID configurations require special administration on the switch and SID. Call your Remote Service Center for information on administering these configurations.

ROLM 8000 CBX Administration

The procedures in this section guide you through the ROLM 8000 CBX administration required for an Intuity system integration. The following list shows you the procedures you must perform to administer the ROLM 8000 CBX for the integration.

- Administer a Class of Service (COS) for the voice ports.
- Assign an analog port and extension to each integrated voice port.
- Assign the Class of Service (COS) to each voice port.
- Administer the ROLMphone station emulation using the following guidelines.
  - Assign eight line appearance to the required keys.
  - Assign hold, transfer, connect, and message waiting center functions to the correct buttons.
  - Assign consecutive line appearance (busy indicators) for the voice ports on the ROLMphone 400.
- Program the hunt group.

Proceed to the next section, *Administer the Class of Service*.

Administer the Class of Service

The Class of Service (COS) identifies the features available to an extension, such as no flash allowed (NFL) and private call (PRV). The procedure in this section explains how to enable or disable features in a COS. In "Chapter 3, Switch Integration Planning", a COS was selected and recorded on Worksheet A:. Before you can assign the COS to an extension, you must check the COS administration and configure the COS, if necessary. For the Intuity system integration, the COS must have the following configuration.

- Feature 3, private call (PRV) enabled
- Feature 9, do not disturb (DND) disabled
- Feature 13, no flash allowed (NFL) disabled
- Feature 17, no howler if left off-hook (NOH) enabled

Use the following procedure to check the COS administration.

1. Log on to the ROLM 8000 administration terminal. For logon instructions, refer to the documentation supplied with the ROLM CBX or contact the system administrator.
2. After you log on to the administration terminal, you see the ? prompt on the screen.
3. Enter **LCSF** (List Class of Service Features) at the ? prompt.
4. Enter the COS number listed on Worksheet A: in Chapter 3 at the COS # prompt.

   After you enter the command, you see the screen shown in Figure 7-1.

```
? LCSF
Cos#: 15

         F M P E C E S S D D S T N C A C N U I V M N R T C F M M C C C V
         O O R O F C V P N T Y K F A P S O N N D O A F E A R S S N C F P
         C H V V I P D D D S C Q L S K F H V T C N C U R A O R C D C E L

        01020304050607080910111213141516171819202122232425262728293031 32
COS#
  15     X X X X X X X X   X X X     X X X
```

Figure 7-1. ROLM 8000 CBX Class of Service Features Screen

The screen lists each COS feature, provides a number for the feature, and shows you the assignment for the feature, either enabled or disabled. Read the screen from top to bottom. For example, in Figure 7-1. the Do Not Disturb (DND) feature is the ninth feature listed (from left to right) and appears as:

```
  D
  N
  D
0 9
```

If a feature is enabled, an X appears under the feature number. If a feature is disabled, the area under the feature number appears blank. When you administer a COS for the Intuity system integration, you must edit an existing COS. Some of the features may already be set correctly. In the example above, the PRV and DND features are set correctly. Feature 13, No Flash Allowed (NFL), and and feature 17, No Howler if Left Off Hook (NOH), are not set correctly. Check your COS carefully.

If the COS you entered *does not* have features 3, 9, 13 and 17 correctly set, continue with the next step. If your COS *does* have the features set correctly, proceed to the next section, *Administer the Analog Voice Ports*.

5. Enter **SCSF** (Set Class of Service Features) at the ? prompt.
6. At the COS prompt, enter the COS number listed on Worksheet A: in "Chapter 3, Switch Integration Planning".
7. Enter feature number **3** at the # prompt.
8. Enter **1** at the FLAG prompt to enable feature 3, PRV.
9. Enter **SCSF** (Set Class of Service Features) again at the ? prompt.
10. Enter the COS number listed on Worksheet A: in Chapter 3 at the COS prompt.
11. Enter feature number **9** at the # prompt.
12. Enter **0** at the FLAG prompt to disable feature 9, DND.
13. Enter **SCSF** (Set Class of Service Features) again at the ? prompt.
14. Enter the COS number listed on Worksheet A: in Chapter 3 at the COS prompt.
15. Enter feature number **13** at the # prompt.
16. Enter **0** at the FLAG prompt to disable feature 13, NFL.
17. Enter **SCSF** (Set Class of Service Features) again at the ? prompt.
18. Enter the COS number listed on Worksheet A: in Chapter 3 at the COS prompt.
19. Enter feature number **17** at the # prompt.
20. Enter **1** at the FLAG prompt to enable feature 17, NOH.

After you enter the commands, the screen appears as shown in Figure 7-2.

```
? SCSF
COS#: 15
#: 13
FLAG: 0

? SCSF
COS#: 15
#: 17
FLAG: 1
```

Figure 7-2. ROLM 8000 CBX Set Class of Service Features Screen

You assign the COS to the analog voice port extensions in the next section, *Administer the Analog Voice Ports*.

Administer the Analog Voice Ports

Each analog voice port must be connected to a CBX analog station line. These lines are configured as "2500" telephone sets. The extension numbers assigned to the analog voice ports are also entered into the SID. Use sequential numbering for the extensions to make the process easier. For each analog port you must complete the following steps in the administration process:

1. Create new extensions for the analog ports.
2. Assign the extensions to the analog voice ports.
3. Disable the automated testing feature for the analog voice ports.
4. Assign a COS to each analog voice port.
5. Verify the administration of each analog voice port.

Continue with the following procedures to administer the analog voice ports.

Create Analog Voice Port Extensions

The Intuity system supports a maximum of 12 analog voice ports, also called channels. You need to repeat the procedure in this section for each analog port you plan to use. Use Worksheet B: Extension/LTN Plan, in "Chapter 3, Switch Integration Planning", to make sure you create an extension for each analog voice port. The worksheet should have been completed by the customer and the Account Team.

Use the following procedure to create analog extensions for each analog voice port.

1. Enter **NEX** (New Extension) at the ? prompt.
2. Enter the first channel extension listed on Worksheet B: in Chapter 3 at the EXTN prompt.

Repeat the procedure for each analog voice port extension listed on Worksheet B:. After you create each extension, you see the screen shown in Figure 7-3. This figure shows a four channel system as an example. The four analog voice port extensions created were 501, 502, 503, and 504.

```
? NEX
EXTN: 501

? NEX
EXTN: 502

? NEX
EXTN: 503

? NEX
EXTN: 504
```

Figure 7-3. Analog Port Extension Creation Screen on the ROLM 8000 CBX

When you finish creating analog voice port extensions, continue with next procedure, *Assign the Extensions to Analog Ports*.

Assign the Extensions to the Analog Ports

Use the following procedure to assign the extensions you created in the previous section to analog voice ports.

1. Enter **NCH** (New Channel) at the ? prompt.
2. Enter the first channel extension listed on Worksheet B: in "Chapter 3, Switch Integration Planning" at the EXTN prompt.
3. Enter the Port Address (PAD) for the analog voice port at the XXYYZZ prompt.

   The PAD identifies the slot, shelf, and channel location for the port. For example, in Figure 7-4. the sample screen assigns 050401 to the first extension, 501.

   - 05 (XX) identifies the slot location for the port.
   - 04 (YY) identifies the shelf location for the port.
   - 01 (ZZ) identifies the channel location for the port.

   If you do not know how to identify the PAD, refer to the documentation provided with the switch.
4. Repeat the procedure for each analog voice port extension listed on Worksheet B:. After you assign the extensions, you see the screen shown in Figure 7-4.

```
? NCH
EXTN: 501
XXYYZZ: 050401


? NCH
EXTN: 502
XXYYZZ: 050402


? NCH
EXTN: 503
XXYYZZ: 050403


? NCH
EXTN: 504
XXYYZZ: 050404
```

Figure 7-4. ROLM 8000 CBX Extension to Analog Port Assignment Screen

When you finish assigning extensions to the analog voice port, continue with the next procedure, *Disable Testing of the Voice Ports*.

Disable Testing of the Voice Ports

Use the following procedure to disable the automated testing feature of the CBX. If you do not disable the feature, the port assigned to the Intuity system fails the ROLM background test. When the port fails, the CBX disconnects the port and cannot communicate with the SID or the Intuity system.

1. Enter **CNT** (Change No Test) at the ? prompt.
2. Enter the first analog port extension listed on Worksheet B: in "Chapter 3, Switch Integration Planning" at the EXTN prompt.
3. Enter **1** in the FLAG field to cancel the automatic testing.

Repeat the procedure for each analog voice port extension listed on Worksheet B: in "Chapter 3, Switch Integration Planning". After you disable the test for all port your screen appears as shown in Figure 7-5.

```
? CNT
EXTN: 501
FLAG: 1


? CNT
EXTN: 502
FLAG: 1


? CNT
EXTN: 503
FLAG: 1


? CNT
EXTN: 504
FLAG: 1
```

Figure 7-5. ROLM 8000 CBX Disable Testing Screen

Continue with the next procedure, *Assign the Class of Service*.

Assign the Class of Service

The Class of Service (COS) identifies the features available to an extension, such as no flash allowed (NFL) and private call (PRV). You administered the COS in the first section of this chapter. This section provides instructions for assigning the COS to each analog voice port.

Use the following procedure to assign the COS administration.

1. Enter **SCS** (Set Class of Service) at the ? prompt.
2. Enter the first analog port extension listed on Worksheet B: in "Chapter 3, Switch Integration Planning" at the EXTN: prompt.
3. Enter the COS number listed on Worksheet A: in Chapter 3 at the #: prompt. You administered the COS in the first section of this chapter.
4. Repeat steps 1 through 3 for each analog voice port extension listed on Worksheet B:.

   After you enter the information, you see the screen shown in Figure 7-6.

```
? SCS
EXTN: 501
#: 15


? SCS
EXTN: 502
#: 15


? SCS
EXTN: 503
#: 15


? SCS
EXTN: 504
#: 15
```

Figure 7-6. ROLM 8000 CBX Set Class of Service Screen

When you finish assigning the COS to the analog voice port extensions, proceed to the next section, *Verify the Analog Voice Port Administration*.

Verify the Analog Voice Port Administration

Use the procedure in this section to confirm that you entered all analog voice port information correctly. If the ports are not configured correctly, the Intuity system integration fails.

Use the following procedure to verify the administration.

1. Enter **LEX** (List Extension) at the ? prompt.
2. Enter the first analog port extension listed on Worksheet B: in "Chapter 3, Switch Integration Planning" at the EXTN: prompt.

   After you enter the information, you see the screen shown in Figure 7-7. The screen shows the information you entered for the voice port. Use Worksheet A: and Worksheet B: to check the information and confirm that you correctly administered the voice port. If any of the information does not appear as you administered the information, repeat the necessary procedure to correct the information.

The example in Figure 7-7. shows the administration for four ports numbered 501, 502, 503, and 504. The screen shows the Port Address (PAD) and the Class of Service (COS) number you assigned.

3. Repeat steps 1 and 2 for each analog voice port extension listed on Worksheet B:.

```
 ? LEX
EXTN: 501
PAD    COS PIK COM DTP TTF  VC  MW OPS
050401  15 000 000  10 10

Name:

? LEX
EXTN: 502
PAD    COS PIK COM DTP TTF  VC  MW OPS
050402  15 000 000  10 10

Name:

? LEX
EXTN: 503
PAD    COS PIK COM DTP TTF  VC  MW OPS
050403  15 000 000  10 10

Name:

? LEX
EXTN: 504
 PAD    COS PIK COM DTP TTF  VC  MW OPS
050404  15 000 000  10 10

Name:
```

Figure 7-7. ROLM 8000 CBX Analog Port Verification Screen

When you finish checking each voice port administration, proceed to the next section, *Administer the ROLMphone 400 Digital Station Set*.

Administer the ROLMphone 400 Digital Station Set

For a ROLM 800 CBX to integrate properly with an Intuity system, you must administer a ROLMphone 400 digital station emulation on the CBX. The administration of the ROLMphone set controls how the SID integration operates. After the ROLMphone has been configured on the CBX, the SID emulates the set and automatically handles button management.

Before you begin the ROLMphone set configuration, locate an available ROLMphone Interface (RPI) channel on the CBX. Worksheet A: in "Chapter 3, Switch Integration Planning", contains a space for the RPI. The RPI should have been selected during the switch integration planning. The examples in this section use RPI 010402.

NOTE:
Any CBX with 8003 or later software should contain support features for the ROLMphone 400.

During the ROLMphone administration, you revise the RPI configuration and identify the attached device for the port as a ROLMphone 400. You then assign eight extensions to the line buttons of the set. To simplify the administration process, use a sequential numbering scheme for the extensions. The administration process includes the following procedures.

- List and verify an unused Feature Configuration table.
- Configure the ROLMphone key emulation using the button assignments shown in Table 7-1.

Table 7-1. Button Assignments for the ROLMphone 400

Button	Assignment
1, 2, 3, 4, and 5	line appearances (busy lamps) 9, 10, 11, 12, and 13, respectively
6, 7, 8, and 9	line appearances 4, 3, 2, and 1, respectively
10	HOLD
11-25	line appearances (busy lamps) 14-28, respectively
26, 27, 28, and 29	line appearances 8, 7, 6, and 5, respectively
30	Connect (CNCT)
37	Message Waiting Center (MWCTR)
38	Transfer (XFER)

- Assign 20 line appearances to serve as the analog voice port busy indicators as indicated in Table 7-1. This allows the SID to emulate a Rolm attendant console.
- Verify the Feature Configuration table you created.
- Assign the Feature Configuration table to the RPI PAD.
- Define the ROLMphone 400 as a display telephone.
- Create eight extensions for the line appearances on the SID.
- Assign the extensions to the line appearance keys.
- Assign the analog voice port extension numbers to non-ringing ROLMphone 400 line appearances.

- Forward each analog voice port extension assigned to call appearances to the same extension.
- List and verify the ROLMphone 400 programming.
- Assign a Class of Service (COS) to each ROLMphone 400 call appearance.

Continue with the procedures in this section to administer the ROLMphone 400 station emulation.

Select the Feature Configuration Table

You use the Feature Configuration table to set up the ROLMphone 400 digital station set emulation. In the table, you specify the button assignments, the line appearance assignments, and the line appearance extensions.

Before you can administer the table, you must select an unused table. Worksheet A: in "Chapter 3, Switch Integration Planning", provided instructions for selecting a Feature Configuration table. Refer to Worksheet A: and verify that a table was selected. If no table was recorded on Worksheet A:, use the instructions for the worksheet to select a Feature Configuration table.

After you check the worksheet, continue with the instructions in the next section, *Configure the Function Keys*.

Configure the Function Keys

Use the procedure in this section to configure the Hold, Connect, Transfer, and Message Waiting Center keys for the ROLMphone 400 digital station emulation. Assign the functions to the keys as listed in Table 7-2.

Table 7-2. Button Assignments for the ROLMphone 400

Button	Command to Assign	Feature
10	HOLD	Hold
30	CNCT	Connect
37	MWCTR	Message Waiting Center
38	XFER	Transfer

1. Enter **RFC** (Revise Functions) at the ? prompt.
2. Enter **RP400** at the TYPE: prompt specify that you are configuring the ROLMphone 400 keys.

3. Enter the Feature Configuration Table number at the REF# prompt.

   Refer to Worksheet A: in Chapter 3 to find the Feature Configuration Table number.

4. Enter the first key listed in the *Key* column of Table 7-2.

5. Enter the command for the key you entered in the previous step at the FEATURE prompt. Use the command listed in the *Command to Assign* column of Table 7-2. For example, if you entered **10** in the previous step, enter the **HOLD** command.

6. Press [ENTER] at the #: prompt. You do not need enter any information in the field.

7. Repeat steps 1 through 6 for each key listed in Table 7-2. Use Table 7-2 to find the correct key number (Key column) and the correct function (Command to Assign).

   After you enter the information, your screen appears as shown in Figure 7-8.

```
? RFC
TYPE: RP400
REF#: 9
INDEX: 10
FEATURE: HOLD
#:
? RFC
TYPE: RP400
REF#: 9
INDEX: 30
FEATURE: CNCT
#:
? RFC
TYPE: RP400
REF#: 9
INDEX: 38
FEATURE: XFER
#:
? RFC
TYPE: RP400
REF#: 9
INDEX: 37
FEATURE: MWCTR
#:
```

Figure 7-8. ROLMphone 400 Key Emulation Configuration Screen

When you finish configuring each function key, proceed to the next section, *Assign Line Appearances for the Call Queue*.

Assign Line Appearances for the Call Queue

The procedure in this section explains how to create a queue of eight ringing line appearances. Later in the chapter, you associate extension with the line appearances and program the extensions in a hunt group.

The queue holds all calls forwarded to the SID. The SID answers any call that appears on one of the appearances and extracts the call information. The SID then sends the information to the Intuity system and transfers the call to an available ports. Table 7-3 shows you the key number and the line appearance number to assign to the key.

Table 7-3. Line Appearance Assignments for the ROLMphone 400

Key	Line Appearance Number
9	1
8	2
7	3
6	4
29	5
28	6
27	7
26	8

Use the procedure in this section to assign the line appearances to the ROLMphone emulation keys.

1. Enter **RFC RP400 <Feature Configuration Table number>** (Revise Functions) at the ? prompt.

   Enter the Feature Configuration Table number as listed on Worksheet A: in "Chapter 3, Switch Integration Planning". The RFC command tells the system to update or create the specified Feature Configuration Table.

2. Enter the first number listed in the *Key* column in Table 7-3 at the INDEX prompt.

   Use the INDEX field to enter the key number to be assigned as a line appearance. For example, to assign key 9 as line appearance 1, enter **9** at the INDEX prompt.

3. Enter **LINE** at the FEATURE prompt.

4. Enter the first number listed in the *Line Appearance Number* column in Table 7-3 at the #: prompt.

Use the #: field to enter the line appearance number to be assigned to the key. For example, to assign line appearance 1 to key 9, enter **1** at the #: prompt.

5. Repeat steps 1 through 4 for each line appearance and key listed in Table 7-3.

After you enter the number at the #: prompt, the screen appears as shown in Figure 7-9.

```
? RFC RP400 9
INDEX: 9
FEATURE: LINE
#: 1

? RFC RP400 9
INDEX: 8
FEATURE: LINE
#: 2

? RFC RP400 9
INDEX: 7
FEATURE: LINE
#: 3

? RFC RP400 9
INDEX: 6
FEATURE: LINE
#: 4

? RFC RP400 9
INDEX: 29
FEATURE: LINE
#: 5

? RFC RP400 9
INDEX: 28
FEATURE: LINE
  #: 6
```

Figure 7-9. ROLMphone 400 Line Appearance Configuration Screen

When you finish assigning line appearances, proceed to the next section, *Assign Busy Indicator Line Appearances*.

Assign Busy Indicator Line Appearances

The procedure in this section explains how to program the 20 line appearances onto the ROLMphone as busy indicators for the analog voice ports. Table 7-4 shows each key number and the line appearance number you must assign to that key.

Table 7-4. Busy Indicator Button Assignments

Button	Line Appearance Number
1	9
2	10
3	11
4	12
5	13
11	14
12	15
13	16
14	17
15	18
16	19
17	20
18	21
19	22
20	23
21	24
22	25
23	26
24	27
25	28

Use the procedure in this section to assign the twenty line appearances as busy indicators for the analog voice ports.

1. Enter **RFC** (Revise Functions) at the ? prompt.
2. Enter **RP400** at the TYPE: prompt to specify that you are configuring the ROLMphone 400 keys.

3. Enter the Feature Configuration Table number at the REF# prompt. Refer to Worksheet A: in "Chapter 3, Switch Integration Planning" to find the Feature Configuration Table number.
4. Enter the first number listed in the *Key* column of Table 7-4 at the INDEX prompt.

   Use the INDEX field to enter the key number to be assigned as a line appearance. For example, to assign key 1 as line appearance 9, enter **1** at the INDEX prompt.
5. Enter **LINE** at the FEATURE prompt.
6. Enter the first number listed in the *Line Appearance Number* column in Table 7-4 at the #: prompt.

   Use the #: field to enter the line appearance number to be assigned to the key. For example, to assign line appearance 9 to key 1, enter **9** at the #: prompt.

   After you enter the number at the #: prompt, the screen appears as shown in Figure 7-10.

```
? RFC
TYPE:  RP400
REF#:  9
INDEX: 1
FEATURE: LINE
#: 9

?RFC RP400 9 2 LINE 10

?RFC RP400 9 3 LINE 11
```

Figure 7-10. ROLMphone 400 Busy Indicators Configuration Screen

7. Repeat steps 1 through 6 for each busy indicator line appearance and key listed in Table 7-4.

8. Enter **LFC RP400 <Feature Configuration Table number>** at the ? prompt to view the Feature Configuration table you administered. Look at the table and check the information you entered. If any of the information is incorrect, use the procedures in the this section to correct the information.

When you finish assigning line appearances and checking the information, proceed to the next section, *Assign the Feature Configuration Table to a PAD*.

Assign the Feature Configuration Table to a PAD

For the information you administered in the Feature Configuration Table to work with the SID, you must assign the table to the RPI PAD that will connect with the SID. Use the procedure in this section to assign the Feature Configuration table to the RPI PAD.

1. Enter **REC <PAD Number>** (Revise ETS Configuration) at the ? prompt. Refer to Worksheet A: in "Chapter 3, Switch Integration Planning", to find the PAD number.
2. Enter the Feature Configuration table number, listed on Worksheet A:, at the #: prompt. The example in Figure 7-11. assigns Feature Configuration Table 9.
3. Press [ENTER] to move past the EXTN: prompt. You do not need to enter any information in the field.
4. Enter **RP400** in the TYPE field to assign the Feature Configuration table to the ROLMphone 400.

After you enter the information in the fields, the screen appears as shown in Figure 7-11.

```
? REC 010402
#: 9
EXTN:
TYPE: RP400
```

Figure 7-11. Feature Configuration Table Assignment Screen

Proceed to the next section, *Define the ROLMphone 400 as a Display Phone*.

Define the ROLMphone 400 as a Display Phone

The SID operate as a ROLMphone 400 digital telephone set. The ROLM 8000 CBX must recognize that a ROLMphone 400 set is attached to the RPI. Use the procedure in this section to define the port on CBX as a ROLMphone 400 port.

1. Enter **ROM** Revise Option Module) at the ? prompt.
2. Enter the Port Address (PAD) for the ROLMphone 400 emulation port at the XXYYZZ: prompt.

   The PAD identifies the slot, shelf, and channel location for the port. Refer to Worksheet A: in "Chapter 3, Switch Integration Planning", to find the PAD number.
3. Enter **1** at the first FLAG prompt.
4. Press ENTER twice to move past the next two FLAG fields. You do not need to enter any information in the fields.

After you enter the information, the screen appears as shown in Figure 7-12..

```
? ROM
XXYYZZ: 010402
FLAG: 1
FLAG:
FLAG:
```

Figure 7-12. ROLMphone 400 Definition Screen

When you complete the procedure, proceed to the next section, *Create Line Appearance Extensions*.

Create Eight Line Appearance Extensions

This section explains how you create extensions on the switch for the line appearances. In a later procedure, the extensions are used to create a call queue and assigned to buttons on the phone.

Use the following procedure to create eight line appearance extensions for the SID.

1. Enter **NEX <extension>** (New Extension) at the ? prompt.

   You need to enter a line appearance extension. Refer to Worksheet C: in "Chapter 3, Switch Integration Planning", for a list of line appearance extensions.

2. Repeat the previous step for each extension listed on Worksheet C:.

After you enter the information, the screen appears as shown in Figure 7-13.

```
? NEX 551

? NEX 552

? NEX 553

? NEX 554

? NEX 555

? NEX 556

? NEX 557

? NEX 558
```

Figure 7-13. Creating the Line Appearance Extensions for the SID Screen

When you complete the procedure, proceed to the next section, *Assign Line Appearance Extensions to Line Appearance Keys*.

Assign Line Appearance Extensions to Line Appearance Keys

This section explains how you associate the line appearance extensions with specific buttons on the ROLMphone 400. Use the following procedure to assign the eight line appearance extensions you created in the previous section to the ROLMphone 400 keys. Assign the line appearances to keys 1 through 8.

1. Enter **RKB** (Revise Key Button) at the ? prompt.
2. Enter the PAD for the ROLMphone port at the XXYYZZ: prompt. Refer to Worksheet A: for the PAD assigned to the ROLMphone 400 emulation port.
3. Enter **1** at the BT#: prompt to assign the first key to the first line appearance extension.
4. Enter the first line appearance extension at the EXTN: prompt.

You created the line appearance extensions in the previous section. Worksheet C: in Chapter 3 also lists each line appearance extension.

5. Enter **1** at the first FLAG prompt.
6. Press (ENTER) twice to move past the next two FLAG fields. You do not have to enter any information into the fields.

   After you enter the information, the screen appears as shown in Figure 7-14.

```
? RKB
XXYYZZ: 010402
BT#: 1
EXTN: 551
FLAG: 1
FLAG:
FLAG:

? RKB 010402 2 552 1 0 0

? RKB 010402 3 552 1 0 0
```

Figure 7-14. Assign Line Appearance Extensions to Keys Screen

7. Repeat steps 1 through 6 for each line appearance extension listed on Worksheet C:. In steps 3 and 4, assign the remaining keys, 2, 3, 4, 5, 6, 7, and 8, to the remaining line appearance extensions listed on Worksheet C:. For example, assign the second extension to key 2 and the third extension to key 3.

After you complete the procedure for each line appearance extension, proceed to the next section, *Assign the Analog Extensions to the Line Appearances*.

Assign the Analog Extensions to Line Appearances

The next process you must perform is to assign the analog voice port extensions to non-ringing line appearance on the ROLMphone 400. You assign the voice ports to line appearances to the SID can monitor the status, whether on-hook or off-hook, of the voice ports. You created the analog extension in the first section of this chapter and the extension are listed on Worksheet B: in Chapter 3.

Begin with line appearance 9 and continue with 10 through the number of analog voice ports on your system. For example, if you have a four port Intuity system, assign line appearances 9, 10, 11 and 12.

Use the following procedure to assign the analog extensions to the line appearances.

1. Enter **RKB** (Revise Key Button) at the ? prompt.
2. Enter the PAD for the ROLMphone port at the XXYYZZ: prompt. Refer to Worksheet A: for the PAD assigned to the ROLMphone 400 emulation port.
3. Enter **9** at the BT#: prompt to assign the first key to the first analog port.
4. Enter the first extension assigned to the analog port at the EXTN: prompt.

   You created the analog port extensions earlier in this chapter. Worksheet B: in Chapter 3 also lists each analog voice port extension.
5. Press [ENTER] three times to move past the three FLAG fields. You do not have to enter any information into the fields.

After you enter the information, the screen appears as shown in Figure 7-15.

```
? RKB
XXYYZZ: 010402
BT#: 9
EXTN: 501
FLAG:
FLAG:
FLAG:

? RKB 010402 10 502 0 0 0

? RKB 010402 11 503 0 0 0

? RKB 010402 12 504 0 0 0
```

Figure 7-15. Assign Analog Port Extensions to Line Appearances Screen

6. Repeat steps 1 through 5 for each analog voice port extension listed on Worksheet B:. In step 3, use the next higher key number than you used in the previous step. For example, since you entered **9** as the first key, assign key 10 to the second analog port extension.

After you complete the procedure for each analog port extension, continue with the next section, *Forward the Call Appearances*.

Forward the Call Appearances

The next process you must perform is to forward each call appearance extension to the same call appearance extension. For example, extension 551 forwards to 551. The process prevents ring-no-answer calls from forwarding to an error tone and allows the system to keep a call in the queue hearing ringback as long as the caller remains on the call.

Use the following procedure to forward the call appearances.

1. Enter **RFD** (Revise Forwarding) at the ? prompt.

2. Enter the first call appearance extension at the EXTN: prompt. Refer to Worksheet C: for the line appearance extensions assigned to the ROLMphone 400.
3. Enter the same call appearance extension at the FWD prompt that you entered in step 2.
4. Enter **15** at the FLAG: prompt.

   15 signifies that the call must forward under all conditions.
5. Enter **0** at both of the FLAG: prompts.

   You specified forward under all conditions in the first flag field and you do not need to specify any additional conditions. Forwarding under all conditions includes the following four conditions:

   - Forward on busy for external call (BE)
   - Forward on busy for internal call (BI)
   - Forward on ring-no-answer for external call (RE)
   - Forward on ring-no-answer for internal call (RI)

   After you enter the information, the screen appears as shown in Figure 7-16. The example assigns call appearance extension 551 to extension 551.

```
? RFD
EXTN: 551
FWD: 551
FLAG: 15
FWD: 0
FLAG: 0
```

Figure 7-16. Forward Call Appearance Lines Screen

6. Repeat steps 1 through 5 for each call appearance extension listed on Worksheet C:.

After you complete the procedure for each call appearance, continue with the next section, *Assign a Class of Service to Call Appearances*.

Assign a Class of Service to Call Appearances

You must assign a Class of Service (COS) to each ROLMphone 400 call appearance. Use the instructions in the *Administer the Class of Service* section of this chapter to configure a COS for the call appearances. Use the COS number listed on Worksheet A: in "Chapter 3, Switch Integration Planning". The COS must have the following features:

- Feature 3, Private Call (PRV), set to 1
- Feature 9, Do Not Disturb (DND), set to 0
- Feature 13, No Flash Allowed (NFL), set to 0
- Feature 17, No Howler if Left Off-Hook (NOH), set to 1

After you configure the COS, use the following procedure to assign the COS to the ROLMphone call appearances.

1. Enter **SCS** (Set Class of Service) at the ? prompt.
2. Enter the first call appearance extension listed on Worksheet C: in Chapter 3 at the EXTN: prompt.
3. Enter the COS number listed on Worksheet A: at the #: prompt.

After you enter the information, you see the screen shown in Figure 7-17.

```
? SCS
EXTN: 551
#: 15
```

Figure 7-17. ROLM 8000 CBX Set Class of Service Screen

4. Repeat the procedure for each call appearance extension listed on Worksheet C:.

When you finish assigning the COS to the call appearance extensions, you have completed the procedures for administering the ROLMphone 400 digital station. Proceed to the next section, *Administer the Hunt Group*.

Administer the Hunt Group

The SID uses one "hunt group" or switch group that contains the eight call appearance extensions assigned to the ROLMphone 400. You assign the Intuity system number as the pilot number for the hunt group. The eight call appearances are assigned to the pilot number. Worksheet C: in "Chapter 3, Switch Integration Planning", contains the pilot number.

NOTE:
AT&T recommends that you do not administer a name for the voice port hunt group. If you administer a name, the CBX must pass the information to the SID for each call. The increased information slows the integration process.

Use the following procedure to set up a hunt group for the SID.

1. Enter **RHG** (Revise Hunt Group) at the ? prompt.
2. Enter the hunt group pilot number at the REF# prompt. The pilot number is the extension subscribers use to call the Intuity system. The example in Figure 7-18. uses 500 as the pilot number. Refer to Worksheet C: for the pilot number assigned to the Intuity system.
3. Enter **1** at the INDEX: prompt.

   The field allows you to declare the position of the extension in the hunt group. For example, if you entered the pilot number, you enter **1** for the index number since the pilot number is the first extension in the hunt group. When you enter the second extension, enter **2** for the index number. Continue increasing the index until you enter all hunt group members.
4. Enter the first call appearance extension at the EXTN: prompt.

   You created the call appearance extensions in this chapter. Worksheet C: in Chapter 3 lists each call appearance extension. Refer to Worksheet C: for a list of the extensions.
5. Repeat steps 1 through 4 for each call appearance extension listed on Worksheet C:.

Enter the Intuity system pilot number at the REF: prompt for each call appearance. Increase the value in the INDEX field by one for each call appearance. For example, you enter **2** in the INDEX field for the second call appearance. After you assign each call appearance to the hunt group, the screen appears as shown in Figure 7-18.

```
? RHG
REF#: 500
INDEX: 1
EXTN: 551

? RHG 500 2 552

? RHG 500 3 553

? RHG 500 4 554

? RHG 500 5 555

? RHG 500 6 556

? RHG 500 7 557

? RHG 500 8 558
```

Figure 7-18. Completed Hunt Group Assignment Screen

You have finished the ROLM 8000 CBX switch administration. Proceed to "Chapter 9, Switch Integration Device Administration", to configure the switch integration device.

ROLM 9000 and 9751 CBX Administration

8

NOTE:
The information presented in this chapter represents guidelines for administering the ROLM 9000 and 9751 CBX to integrate with an Intuity system. Each switch may have a different administration. The switch administration process should be performed by a trained ROLM technician. *AT&T services personnel will not administer the ROLM CBX.*

This chapter contains instructions for administering a ROLM 9000 and 9751 Computerized Branch Exchange (CBX) to operate with an Intuity system. The instructions only explain the screen fields and information necessary for the integration. If you have a ROLM 8000 CBX, refer to the instructions in "Chapter 7, ROLM 8000 CBX Administration". If you have another type of switch, refer to the documentation provided with that switch or the switch integration package for more information.

Each procedure in this chapter uses examples to explain the process. All examples use standard information such as the pilot number, analog voice port extensions, and call appearance extensions. The examples use the following information.

- The SID uses a pilot extension of **500**.
- Eight extensions, **551, 552, 553, 554, 555, 556, 557,** and **558**, will be created and administered on the ROLMphone™ keys. The extensions belong in the **500** hunt group.
- The Intuity system uses four analog voice ports (channels) numbered 501, 502, 503, and 504.

Use the examples to help you understand the administration process. Refer to "Chapter 3, Switch Integration Planning", to find the correct information for your integration.

NOTE:
Multiple SID configurations require special administration on the switch and SID. Call your Remote Service Center for information on administering these configurations.

The following list shows you the procedures you must perform to administer the ROLM 9000 and 9751 CBX for the integration.

- Administer a Class of Service (COS) for the voice ports.
- Administer the analog voice ports.
- Administer the ROLMphone 400 station
- Administer the hunt group

Proceed to the next section, *Administer the Class of Service*.

Administer the Class of Service

The Class of Service (COS) identifies the features available to an extension, such as no flash allowed (NFL) and private call (PRV). The procedure in this section explains how to enable or disable features in a COS as required for the Intuity system integration. In "Chapter 3, Switch Integration Planning", a COS was selected and recorded on Worksheet A:. Before you can assign the COS to an extension, you must check the COS administration and configure the COS, if necessary. For the Intuity system integration, the COS must have the following configuration.

- Always in Privacy (APV) set to Yes
- No Flash Allowed (NFL) set to No
- No Howler (NOH) set to Yes
- Do Not Disturb (DND) set to No

Use the following procedure to administer the COS.

1. Log on to the ROLM 9000 or 9751 administration terminal. For logon instructions, refer to the documentation supplied with the ROLM CBX or contact the system administrator.
2. After you log on to the administration terminal, you see the COMMAND prompt on the screen.
3. Enter **MO COS_FEATURE NOH** (Modify Class of Service Feature Command for No Howler) at the COMMAND prompt.

   After you enter the command, you see the screen shown in Figure 8-1.

```
COMMAND: MO COS_FEATURE NOH


ALL
FEAT   SAME   VALUE
NOH    N      -

RANGE     0  1  2  3  4  5  6  7  8  9 10 11 12 13 14 15 16 17 18 19
0..19     _  _  _  _  _  _  _  _  _  _  _  _  _  _  _  Y  _  _  _  _
20..39    _  _  _  _  _  _  _  _  _  _  _  _  _  _  _  _  _  _  _  _
40..59    _  _  _  _  _  _  _  _  _  _  _  _  _  _  _  _  _  _  _  _
60..63    _  _  _  _
```

Figure 8-1. ROLM 9000/9751 CBX Class of Service Features Screen

The screen lists each COS number and shows you the assignment for the feature, either enabled or disabled. If the feature is enabled for the COS, a Y appears under the COS number. If the feature is disabled for the COS, the area under the COS number appears blank.

4. Move the cursor to the COS you need to modify by pressing (ENTER) until the cursor appears under the COS number.

   Refer to Worksheet A: Switch Integration Information in "Chapter 3, Switch Integration Planning", to find the COS number you must modify. The example in Figure 8-1. uses COS 15.

5. Enter **Y** to enable NOH if the field does not already contain the value.
6. Enter **MO COS_FEATURE APV** (Modify Class of Service Feature Command for Always in Privacy) at the COMMAND prompt.
7. Move the cursor to the COS number you need to modify by pressing (ENTER) until the cursor appears under the COS number.
8. Enter **Y** to enable APV if the field does not already contain the value.
9. Enter **MO COS_FEATURE NFL** (Modify Class of Service Feature Command for No Flash Allowed) at the COMMAND prompt.

10. Move the cursor to the COS number you need to modify by pressing (ENTER) until the cursor appears under the COS number.
11. Enter a space in the field to disable NFL if the field does not already contain a space.
12. Enter **MO COS_FEATURE DND** (Modify Class of Service Feature Command for Do Not Disturb) at the COMMAND prompt.
13. Move the cursor to the COS number you need to modify by pressing (ENTER) until the cursor appears under the COS number.
14. Enter a space in the field to disable DND if the field does not already contain a space.

You have finished the COS administration process. Proceed to the next section, *Administer the Analog Voice Ports*.

Administer the Analog Voice Ports

Each analog voice port must be connected to a CBX analog station line. The analog station lines are configured as "2500" telephone sets. The extension numbers you assign to the analog voice ports are also entered into the SID. For each analog voice port you must complete the following steps in the administration process:

- Create new extensions for the analog ports
- Assign the extensions to the analog ports
- Disable the automated testing feature for the analog ports
- Verify the administration of each analog port

NOTE:
You must assign each analog voice port a unique Port Address (Pad) number because each port is configured as a single-line telephone.

Continue with the following procedures to administer the analog voice ports.

Create Analog Voice Port Extensions

The Intuity system supports a maximum of 12 analog voice ports, also called channels. You need to repeat the procedure in this section for each analog voice port you plan to use. Use Worksheet B: Extension/LTN Plan, in "Chapter 3, Switch Integration Planning", to make sure you create an extension for each analog voice port. The worksheet should have been completed by the customer and the Account Team.

Use the following procedure to create extensions for each analog voice port.

1. Enter **CRE EXT <extension number>** (Create Extension) at the COMMAND prompt. Enter the first channel extension listed on Worksheet B: Extension/LTN Plan in Chapter 3. After you enter the command, you see the screen shown in Figure 8-2.

```
COMMAND: CRE EXT 501



                                      FORWARD  ON
                       FORWARDING     BSY RNA DND
EXTN    TYPE  COS  TARGET 1 TARGET 2 I E I E I E RINGDOWN NAME
------- ---   ---  -------- -------- - - - - - - -------- ----
501     EXT   15                     - - - - - -
```

Figure 8-2. Analog Port Extension Creation Screen

The cursor should appear in the TYPE field. If the cursor does not appear in the field, press [ENTER] and move the cursor to the field.

2. Enter **EXT** in the TYPE field to identify the type as an extension. The cursor moves to the COS field.
3. Enter the COS number in the COS field. Refer to Worksheet A: for the COS number you must enter. The number is the same COS number you configured in the previous section.
4. Press [ENTER] to move through the rest of the fields on the screen. Do not enter any information in the fields.
5. Repeat the procedure for each analog voice port extension listed on Worksheet B: in Chapter 3.

   The example in Figure 8-2. shows the screen for a four channel system. The four analog port extensions created were 501, 502, 503, and 504.

When you finish creating analog voice port extensions, continue with next procedure, *Create and Assign SLI Ports*.

Create and Assign SLI Ports

You must create and assign a single line interface (SLI) for each analog voice port extension. The ROLM 9000 and 9751 CBXs use the SLI to associate each extension with an equipment address and to define characteristics, such as the dial type, for the extension.

Use the following procedure to create and assign the SLI ports.

1. Enter **CRE SLI 01/<PAD Address>** (Create) at the COMMAND prompt.

   The PAD identifies the slot, shelf, and channel location for the port. For example, in Figure 8-3. the sample screen assigns 01/042401 to the first extension, 501.

   - 01 (XX) identifies the system node number.
   - 04 (XX) identifies the slot location for the port.
   - 24 (YY) identifies the shelf location for the port.
   - 01 (ZZ) identifies the channel location for the port.

   If you do not know how to identify the PAD, refer to the documentation provided with the switch. After you enter the command, you see the screen shown in Figure 8-3. The cursor appears in the USE field.

```
COMMAND: CRE SLI 01/042401

PAD REF   USE EXTN DIALTYPE TEST FLASH PHONE
01/042401 EXT 501  D        N    N
```

Figure 8-3. Create and Assign SLI Ports Screen

2. Enter **EXT** in the USE field.

   The value tells the system to assign an extension to the PAD.

3. Enter an analog voice port extension in the EXTN field.

   For a list of analog voice port or channel extensions, refer to Worksheet B: in Chapter 3. The voice port extension you enter in this step is assigned to the PAD address.

4. Enter **D** in the DIALTYPE field.

   The value tells the system to set the dial type to DTMF for the system. If you do not set the dial type correctly, the Intuity system cannot dial out.

5. Enter **N** in the TEST field.

   The value tells the system to disable the automated testing feature of the CBX. If you do not disable the feature, the port assigned to the Intuity system fails the ROLM background test. When the port fails, the CBX disconnects the port and cannot communicate with the SID or the Intuity system.

6. Enter **N** in the FLASH field.

   The value disables the message waiting lamp flash feature. The ROLM 9000 and 9751 use voltage to flash neon lamps. Analog voice ports detect the voltage and believe they are receiving a signal, which causes system problems.

7. Repeat the procedure for each analog voice port extension.

Continue to the next procedure, *Verify the Analog Voice Port Administration*.

Verify the Analog Voice Port Administration

Use the procedure in this section to confirm that you entered all analog voice port information correctly. If the ports are not configured correctly, the Intuity system integration fails.

1. Enter **LI LEX** and an analog port extension at the COMMAND prompt.

   Enter the analog voice port extension after the **LI LEX** (List Extension) command. For example, if you needed to use extension 501, you would enter LI LEX 501. Refer to Worksheet B: in Chapter 3 for a list of analog voice port extensions.

   After you enter the information, you see the screen shown in Figure 8-4. The screen shows the information you entered for the voice port. Use Worksheet A: and Worksheet B: to check the information and confirm that you correctly administered the voice port. If any of the information does not appear as you administered the information, repeat the necessary procedure to correct the information.

2. Repeat the verification procedure for each analog voice port extension listed on Worksheet B:.

```
COMMAND: LI LEX 501

                                      FORWARD ON
                       FORWARDING     BSY RNA DND
EXTN    TYPE COS  TARGET 1 TARGET 2  I E I E I E RINGDOWN NAME
------- ---  ---  -------- --------  - - - - - - -------- ----
501     EXT  15                      - - - - - -

* EXTENSION IS NOT A MEMBER OF ANY GROUP *

TERMINAL EQUIPMENT CROSS REFERENCE
TYPE  PAD        TYPE  PAD        TYPE  PAD        TYPE  PAD
SLI   01/042401
```

Figure 8-4. ROLM 8000 CBX Analog Port Verification Screen

Proceed to the next section, *Administer the ROLMphone 400 Station*.

Administer the ROLMphone 400 Station

For a ROLM 9000 or 9751 CBX to integrate properly with an Intuity system, you must administer a ROLMphone 400 digital station emulation on the CBX. The administration of the ROLMphone set controls how the SID integration operates. After the ROLMphone has been configured on the CBX, the SID emulates the set and automatically handles button management.

Before you begin the ROLMphone set configuration, locate an available ROLMphone Interface (RPI) channel on the CBX. Worksheet A: Switch Integration Information in "Chapter 3, Switch Integration Planning", contains a space for the RPI. The RPI should have been selected during the switch integration planning.

During the ROLMphone administration, you revise the RPI configuration and identify the attached device for the port as a ROLMphone 400. You then assign eight extensions to the line buttons of the set. To simplify the administration process, use a sequential numbering scheme for the extensions. The administration process includes the following procedures.

- Select an unused Feature Configuration table.
- Edit the Feature Configuration table using the key assignments shown in Table 8-1.

Table 8-1. Feature Key Assignments

Key	Assignment
1, 2, 3, 4, and 5	Line appearances (busy lamps) 9, 10, 11, 12, and 13, respectively
6, 7, 8, and 9	Line appearances 4, 3, 2, and 1, respectively
10	HOLD
11-25	Line appearances (busy lamps) 14-28, respectively
26, 27, 28, and 29	Line appearances 8, 7, 6, and 5, respectively
30	Connect (CNCT)
37	Message Waiting Center (MWCTR)
38	Transfer (XFER)

- Assign 20 line appearances to serve as the analog voice port busy indicators as shown in Table 8-1.
- Create eight line appearance extensions.
- Program the ROLMphone 400.
- Administer the hunt group.

Continue with the procedures in this section to administer the ROLMphone 400 station emulation.

Select the Feature Configuration Table

A Feature Configuration table (FCT) serves as a semi-standardized guideline for programming a subscriber's phone. When you apply the Feature Configuration table to a PAD address, the terminal associated with that equipment location immediately has a function template applied to the terminal's button set. Feature Configuration tables provide a method for grouping subscriber telephones into similar functional groups. If you apply the same FCT to 100 terminals, each subscriber will have line appearances, key assignments, and other functions in the same physical place. An FCT represents a blueprint for the telephone buttons.

Before you can administer the table, you must select an unused FCT. Worksheet A: in "Chapter 3, Switch Integration Planning", provides instructions for selecting a Feature Configuration table. Refer to Worksheet A: and verify that a Feature Configuration table was selected. If no table was recorded on Worksheet A:, use the instructions for the worksheet to select a Feature Configuration table. After you check Worksheet A:, continue with the instructions in the next section, *Edit the Feature Configuration Table*.

Edit the Feature Configuration Table

The procedure in this section explains how to program the 20 line appearances onto the ROLMphone as busy indicators for the analog voice ports. Use Table 8-1 as a guide to each key number and line appearance number you must assign to that key.

This section contains information for both the novice user and the experienced user. If you are an experienced user, you can proceed past the novice information and set up the Feature Configuration table by following Table 8-1. If you are a novice user, carefully follow the procedures to make sure you correctly set up the Feature Configuration table.

Use the following procedure to edit the Feature Configuration table.

1. Enter **CRE BUTTON_400** and a Feature Configuration table number at the COMMAND prompt.

   Enter the FCT number after the **CRE BUTTON_400** (Create) command. For example, if you needed to use FCT 9, you would enter **CRE BUTTON_400 9**. Refer to Worksheet A: in Chapter 3 for the Feature Configuration table number.

2. After you enter the command, you see the screen shown in the Figure 8-5. The example uses Feature Configuration Table number 9 and the cursor appears in the FEAT field for button 1.

```
COMMAND: CRE BUTTON_400 9

PHONE
TYPE     TABLE #
-------    --
RPS_400     9

 BTN FEAT  IDX  BTN FEAT  IDX  BTN FEAT  IDX  BTN FEAT  IDX  BTN FEAT  IDX
 --- ----- ---  --- ----- ---  --- ----- ---  --- ----- ---  --- ----- ---
 1   REPDL 1    11  REPDL 6    16  REPDL 11   21  STASP      31  SYSSP
 1              11             16             21             31
```

Figure 8-5. Feature Configuration Table, Row 1

Figure 8-5. shows you the first physical row of buttons on the phone. If you look at a ROLMphone 400, you see that the top row of buttons are 1, 11, 16, 21, and 31. Think of the Feature Configuration table as the layout of the physical keys and the place to assign line appearances or functions to the keys. Each field on the screen represents an area where you can assign functions to the keys as shown in the following list.

- The BTN field represents the key number.
- The FEAT field tells you the function, if any, assigned to the keys. For example, HOLD or CNCT may be assigned to the keys.
- The IDX field tells you the index number for the key. You need to enter a value for the index if you assign the line as an appearance. For example, key one needs to be assigned as line appearance nine. Enter **LINE** in the FEAT field and **9** in the IDX field for key one.

For each key, the Feature Configuration Table shows two lines. The first line contains the default value for the field. Use the second line to enter your changes. To simplify the instructions, each row of keys has been placed into a section. Proceed to the first key assignment section, *Feature Configuration Table, Row 1*.

Feature Configuration Table, Row 1

Use the instructions in this section to configure keys 1, 11, 16, 21, and 31. For an explanation of the key assignments, refer to Table 8-1.

1. With the cursor in the FEAT field for key 1 as shown in Figure 8-5., enter **LINE**.
2. Enter **9** in the IDX field. The cursor moves to the FEAT field for key 11.
3. Enter **LINE** in the FEAT field for key 11.
4. Enter **14** in the IDX field. The cursor moves to the FEAT field for key 16.
5. Enter **LINE** in the FEAT field for key 16
6. Enter **19** in the IDX field. The cursor moves to the FEAT field for key 21.
7. Enter **LINE** in the FEAT field for key 21.
8. Enter **24** in the IDX field. The cursor moves to the FEAT field for key 31.
9. Press [ENTER] to accept the default value and move the cursor to the LINE field for key 2.

After you press the key, you see the screen as shown in Figure 8-6.

```
COMMAND: CRE BUTTON_400 9

PHONE
TYPE     TABLE #
-------    --
RPS_400     9

 BTN FEAT  IDX  BTN FEAT  IDX  BTN FEAT  IDX  BTN FEAT  IDX  BTN FEAT  IDX
 --- ----- ---  --- ----- ---  --- ----- ---  --- ----- ---  --- ----- ---
 1   REPDL 1    11  REPDL 6    16  REPDL 11   21  STASP      31  SYSSP
 1   LINE  9    11  LINE  14   16  LINE  19   21  LINE  24   31
 2   REPDL 2    12  REPDL 7    17  REPDL 12   22  PICK       32  SVRPT
 2              12             17             22             32
```

Figure 8-6. Feature Configuration Table, Row 2

Feature Configuration Table, Row 2

Use the instructions in this section to configure keys 2, 12, 17, 22, and 32. For an explanation of the key assignments, refer to Table 8-1.

1. With the cursor in the FEAT field for key 2 as shown in Figure 8-6., enter **LINE**.
2. Enter **10** in the IDX field. The cursor moves to the FEAT field for key 12.
3. Enter **LINE** in the FEAT field for key 12.
4. Enter **15** in the IDX field. The cursor moves to the FEAT field for key 17.
5. Enter **LINE** in the FEAT field for key 17.
6. Enter **20** in the IDX field. The cursor moves to the FEAT field for key 22.
7. Enter **LINE** in the FEAT field for key 22.

8. Enter **25** in the IDX field. The cursor moves to the FEAT field for key 32.
9. Press ENTER to accept the default value and move the cursor to the LINE field for key 3.

   After you press the key, you see the screen as shown in Figure 8-7.

```
COMMAND: CRE BUTTON_400 9

PHONE
TYPE     TABLE #
-------    --
RPS_400     9

 BTN FEAT  IDX  BTN FEAT  IDX  BTN FEAT  IDX  BTN FEAT  IDX  BTN FEAT  IDX
 --- ----- ---  --- ----- ---  --- ----- ---  --- ----- ---  --- ----- ---
 1   REPDL 1    11  REPDL 6    16  REPDL 11   21  STASP      31  SYSSP
 1   LINE  9    11  LINE  14   16  LINE  19   21  LINE  24   31
 2   REPDL 2    12  REPDL 7    17  REPDL 12   22  PICK       32  SVRPT
 2   LINE  10   12  LINE  15   17  LINE  20   22  LINE  25   32
 3   REPDL 3    13  REPDL 8    18  REPDL 13   23  PARK       33  MSGWT
 3              13             18             23             33
```

Figure 8-7. Feature Configuration Table, Row 3

Feature Configuration Table, Row 3

Use the instructions in this section to configure keys 3, 13, 18, 23, and 33.

1. With the cursor in the FEAT field for key 3 as shown in Figure 8-7., enter **LINE**.
2. Enter **11** in the IDX field. The cursor moves to the FEAT field for key 13.
3. Enter **LINE** in the FEAT field for key 13.
4. Enter **16** in the IDX field. The cursor moves to the FEAT field for key 18.
5. Enter **LINE** in the FEAT field for key 18.

6. Enter **21** in the IDX field. The cursor moves to the FEAT field for key 23.
7. Enter **LINE** in the FEAT field for key 23.
8. Enter **26** in the IDX field. The cursor moves to the FEAT field for key 33.
9. Press (ENTER) to accept the default value and move the cursor to the LINE field for key 4.

   After you press the key, you see the screen as shown in Figure 8-8.

```
COMMAND: CRE BUTTON_400 9

PHONE
TYPE     TABLE #
-------    --
RPS_400     9

 BTN FEAT  IDX  BTN FEAT  IDX  BTN FEAT  IDX  BTN FEAT  IDX  BTN FEAT  IDX
 --- ----- ---  --- ----- ---  --- ----- ---  --- ----- ---  --- ----- ---
 1   REPDL 1    11  REPDL 6    16  REPDL 11   21  STASP      31  SYSSP
 1   LINE  9    11  LINE  14   16  LINE  19   21  LINE  24   31
 2   REPDL 2    12  REPDL 7    17  REPDL 12   22  PICK       32  SVRPT
 2   LINE  10   12  LINE  15   17  LINE  20   22  LINE  25   32
 3   REPDL 3    13  REPDL 8    18  REPDL 13   23  PARK       33  MSGWT
 3   LINE  11   13  LINE  16   18  LINE  21   23  LINE  26   33
 4   REPDL 4    14  REPDL 9    19  REPDL 14   24  BUSS       34  TIME
 4              14              19              24             34
```

Figure 8-8. Feature Configuration Table, Row 4

Feature Configuration Table, Row 4

Use the instructions in this section to configure keys 4, 14, 19, 24, and 34.

1. With the cursor in the FEAT field for key 4 as shown in Figure 8-8., enter **LINE**.
2. Enter **12** in the IDX field. The cursor moves to the FEAT field for key 14.
3. Enter **LINE** in the FEAT field for key 14.

4. Enter **17** in the IDX field. The cursor moves to the FEAT field for key 19.
5. Enter **LINE** in the FEAT field for key 19.
6. Enter **22** in the IDX field. The cursor moves to the FEAT field for key 24.
7. Enter **LINE** in the FEAT field for key 24.
8. Enter **27** in the IDX field. The cursor moves to the FEAT field for key 34.
9. Press ENTER to accept the default value and move the cursor to the LINE field for key 5.

   After you press the key, you see the screen as shown in Figure 8-9.

```
COMMAND: CRE BUTTON_400 9

PHONE
TYPE     TABLE #
-------    --
RPS_400     9

 BTN FEAT  IDX  BTN FEAT  IDX  BTN FEAT  IDX  BTN FEAT  IDX  BTN FEAT  IDX
 --- ----- ---  --- ----- ---  --- ----- ---  --- ----- ---  --- ----- ---
 1   REPDL 1    11  REPDL 6    16  REPDL 11   21  STASP      31  SYSSP
 1   LINE  9    11  LINE  14   16  LINE  19   21  LINE  24   31
 2   REPDL 2    12  REPDL 7    17  REPDL 12   22  PICK       32  SVRPT
 2   LINE  10   12  LINE  15   17  LINE  20   22  LINE  25   32
 3   REPDL 3    13  REPDL 8    18  REPDL 13   23  PARK       33  MSGWT
 3   LINE  11   13  LINE  16   18  LINE  21   23  LINE  26   33
 4   REPDL 4    14  REPDL 9    19  REPDL 14   24  BUSS       34  TIME
 4   LINE  12   14  LINE  17   19  LINE  22   24  LINE  27   34
 5   REPDL 5    15  REPDL 10   20  SET        25  INTCM      35  AINTC
 5              15             20             25             35
```

Figure 8-9. Feature Configuration Table, Row 5

Feature Configuration Table, Row 5

Use the instructions in this section to configure keys 5, 15, 20, 25, and 35.

1. With the cursor in the FEAT field for key 5 as shown in Figure 8-9., enter **LINE**.
2. Enter **13** in the IDX field. The cursor moves to the FEAT field for key 15.
3. Enter **LINE** in the FEAT field for key 15.
4. Enter **18** in the IDX field. The cursor moves to the FEAT field for key 20.
5. Enter **LINE** in the FEAT field for key 20.
6. Enter **23** in the IDX field. The cursor moves to the FEAT field for key 25.

7. Enter **LINE** in the FEAT field for key 25.
8. Enter **28** in the IDX field. The cursor moves to the FEAT field for key 35.
9. Press [ENTER] to accept the default value and move the cursor to the LINE field for key 6.

   After you press the key, you see the screen as shown in Figure 8-10.

```
COMMAND: CRE BUTTON_400 9

PHONE
TYPE     TABLE #
-------    --
RPS_400     9

 BTN FEAT  IDX  BTN FEAT  IDX  BTN FEAT  IDX  BTN FEAT  IDX  BTN FEAT  IDX
 --- ----- ---  --- ----- ---  --- ----- ---  --- ----- ---  --- ----- ---
 1   REPDL 1    11  REPDL 6    16  REPDL 11   21  STASP      31  SYSSP
 1   LINE  9    11  LINE  14   16  LINE  19   21  LINE  24   31
 2   REPDL 2    12  REPDL 7    17  REPDL 12   22  PICK       32  SVRPT
 2   LINE  10   12  LINE  15   17  LINE  20   22  LINE  25   32
 3   REPDL 3    13  REPDL 8    18  REPDL 13   23  PARK       33  MSGWT
 3   LINE  11   13  LINE  16   18  LINE  21   23  LINE  26   33
 4   REPDL 4    14  REPDL 9    19  REPDL 14   24  BUSS       34  TIME
 4   LINE  12   14  LINE  17   19  LINE  22   24  LINE  27   34
 5   REPDL 5    15  REPDL 10   20  SET        25  INTCM      35  AINTC
 5   LINE  13   15  LINE  18   20  LINE  23   25  LINE  28   35
 6   LINE  1                                   26  CAMP
 6                                             26
```

Figure 8-10. Feature Configuration Table, Row 6

Feature Configuration Table, Rows 6, 7, and 8

Use the instructions in this section to configure keys 6, 7, 8, 26, 27, 28, and 36.

1. With the cursor in the FEAT field for key 6 as shown in Figure 8-10., enter **LINE**.
2. Enter **4** in the IDX field. The cursor moves to the FEAT field for key 26.
3. Enter **LINE** in the FEAT field for key 26.
4. Enter **8** in the IDX field. The cursor moves to the FEAT field for key 7.
5. Enter **LINE** in the FEAT field for key 7.
6. Enter **3** in the IDX field. The cursor moves to the FEAT field for key 27.
7. Enter **LINE** in the FEAT field for key 27.
8. Enter **7** in the IDX field. The cursor moves to the FEAT field for key 8.
9. Enter **LINE** in the FEAT field for key 8.

10. Enter **2** in the IDX field. The cursor moves to the FEAT field for key 28.
11. Enter **LINE** in the FEAT field for key 28.
12. Enter **6** in the IDX field. The cursor moves to the FEAT field for key 36.
13. Press ENTER to accept the default value and move the cursor to the LINE field for key 9.

    After you press the key, you see the screen as shown in Figure 8-11.

```
COMMAND: CRE BUTTON_400 9

PHONE
TYPE     TABLE #
-------    --
RPS_400     9

 BTN FEAT  IDX  BTN FEAT  IDX  BTN FEAT  IDX  BTN FEAT  IDX  BTN FEAT  IDX
 --- ----- ---  --- ----- ---  --- ----- ---  --- ----- ---  --- ----- ---
 1   REPDL 1    11  REPDL 6    16  REPDL 11   21  STASP      31  SYSSP
 1   LINE  9    11  LINE  14   16  LINE  19   21  LINE  24   31
 2   REPDL 2    12  REPDL 7    17  REPDL 12   22  PICK       32  SVRPT
 2   LINE  10   12  LINE  15   17  LINE  20   22  LINE  25   32
 3   REPDL 3    13  REPDL 8    18  REPDL 13   23  PARK       33  MSGWT
 3   LINE  11   13  LINE  16   18  LINE  21   23  LINE  26   33
 4   REPDL 4    14  REPDL 9    19  REPDL 14   24  BUSS       34  TIME
 4   LINE  12   14  LINE  17   19  LINE  22   24  LINE  27   34
 5   REPDL 5    15  REPDL 10   20  SET        25  INTCM      35  AINTC
 5   LINE  13   15  LINE  18   20  LINE  23   25  LINE  28   35
 6   LINE  1                                   26  CAMP
 6   LINE  4                                   26  LINE  8
 7   LINE  2                                   27  FORWD
 7   LINE  3                                   27  LINE  7
 8   LINE  3                                   28  CONF       36  SPKR
 8   LINE  2                                   28  LINE  6    36
 9   LINE  4                                   29  FLASH      37  MUTE
 9         1                                   29        5    37
```

Figure 8-11. Feature Configuration Table, Row 7

Feature Configuration Table, Rows 9 and 10

Use the instructions in this section to configure keys 9, 10, 29, 30, 37, 38.

1. With the cursor in the FEAT field for key 9 as shown in Figure 8-11., enter **LINE**.
2. Enter **1** in the IDX field. The cursor moves to the FEAT field for key 29.
3. Enter **LINE** in the FEAT field for key 29.
4. Enter **5** in the IDX field. The cursor moves to the FEAT field for key 37.
5. Enter **MWCTR** in the FEAT field to assign key 37 as the message waiting center key. After you enter the value, the cursor moves to the FEAT field for key 10.
6. Enter **HOLD** in the FEAT field to assign the hold function to the key. The cursor moves to the FEAT field for key 30.

7. Enter **CNCT** in the FEAT field to assign the connect function to the key. After you enter the value, the cursor moves to the FEAT field for key 38.
8. Enter **XFER** in the FEAT field to assign the transfer function to the key.

   After you enter the value, you see the screen as shown in Figure 8-12.
9. Compare your Feature Configuration Table with Figure 8-12. and Table 8-1. Make sure you entered the information correctly. If you find any information that is not correct, edit the Feature Configuration table and enter the correct information.

```
COMMAND: CRE BUTTON_400 9

PHONE
TYPE     TABLE #
-------    --
RPS_400     9

 BTN FEAT  IDX  BTN FEAT  IDX  BTN FEAT  IDX  BTN FEAT  IDX  BTN FEAT  IDX
 --- ----- ---  --- ----- ---  --- ----- ---  --- ----- ---  --- ----- ---
 1   REPDL 1    11  REPDL 6    16  REPDL 11   21  STASP      31  SYSSP
 1   LINE  9    11  LINE  14   16  LINE  19   21  LINE  24   31
 2   REPDL 2    12  REPDL 7    17  REPDL 12   22  PICK       32  SVRPT
 2   LINE  10   12  LINE  15   17  LINE  20   22  LINE  25   32
 3   REPDL 3    13  REPDL 8    18  REPDL 13   23  PARK       33  MSGWT
 3   LINE  11   13  LINE  16   18  LINE  21   23  LINE  26   33
 4   REPDL 4    14  REPDL 9    19  REPDL 14   24  BUSS       34  TIME
 4   LINE  12   14  LINE  17   19  LINE  22   24  LINE  27   34
 5   REPDL 5    15  REPDL 10   20  SET        25  INTCM      35  AINTC
 5   LINE  13   15  LINE  18   20  LINE  23   25  LINE  28   35
 6   LINE  1                                   26  CAMP
 6   LINE  4                                   26  LINE  8
 7   LINE  2                                   27  FORWD
 7   LINE  3                                   27  LINE  7
 8   LINE  3                                   28  CONF       36  SPKR
 8   LINE  2                                   28  LINE  6    36
 9   LINE  4                                   29  FLASH      37  MUTE
 9   LINE  1                                   29  LINE  5    37  MWCTR
 10  HOLD                                      30  CNCT       38  XFER
 10  HOLD                                      30  CNCT       38  XFER
```

Figure 8-12. Completed Feature Configuration Table

You have configured the function keys, assigned line appearances for the call queue, and assigned the busy indicator line appearances. Proceed to the next section, *Create Eight Line Appearance Extensions*.

Create Eight Line Appearance Extensions

This section explains how you create extensions on the switch for the line appearances. The extension are assigned to eight ROLMphone 400 line appearance keys to form the SID hunt group for incoming integrated calls.

Use the following procedure to create eight line appearance extensions for the SID.

1. Enter **CRE EXT** and a line appearance extension at the COMMAND prompt.

   Enter the line appearance extension after the **LI LEX** (List Extension) command. For example, if you needed to use extension 551, you would enter **CRE EXT 501**. Refer to Worksheet C: in Chapter 3 for a list of line appearance extensions.

2. After you enter the command, you see the screen shown in Figure 8-13. The cursor appears in the TYPE field.

```
COMMAND: CRE EXT 501



                                      FORWARD  ON
                        FORWARDING    BSY RNA DND
EXTN    TYPE  COS  TARGET 1 TARGET 2 I E I E I E RINGDOWN NAME
------- ---  ---   -------- -------- - - - - - - -------- ----
501     EXT   15                     - - - - - -
```

Figure 8-13. Create Extension Screen

3. Enter **EXT** in the TYPE field.

   The value tells the ROLM 9000 and 9751 CBX to use the extension as a line appearance. After you enter the value, the cursor moves to the COS field.

4. Enter the Class of Service number in the COS field. Refer to Worksheet A: for the COS number.

5. Press [ENTER] to move the cursor through the remaining fields on the screen and accept the default values.

6. Repeat the procedure for each extension listed on Worksheet C:.

When you complete the procedure, proceed to the next section, *Program the ROLMphone 400*.

Program the ROLMphone 400

After creating the analog voice port extensions and line appearance extensions and editing the Feature Configuration Table, you must program the ROLMphone 400. When you program the ROLMphone 400, you associate the Feature Configuration table with a PAD, program the eight extensions of the call queue onto the line appearances, and associate the analog voice ports with their appropriate busy indicators. Use the following procedure to assign the table and the extensions.

1. Enter **CRE RPI** and a PAD number at the COMMAND prompt.

   Enter the Port Address (PAD) number after the **CRE RPI** (Create ROLMphone Interface) command. For example, if you needed to use PAD number 01/010402, you would enter **CRE RPI 01/010402**. Refer to Worksheet A: in Chapter 3 for PAD number. After you enter the command, you see the screen shown in Figure 8-14. The cursor appears in the TYPE field.

```
   COMMAND: CRE RPI 01/010402



                   REF       TBL BUZZ             SPKR                    CLD
   PAD       DATA NO.  TYPE NO. INTERCOM VOICE C PHONE EXTN 1  R  MW BI NME
   --------- -    ---- ---- --  -------  ------- -     ------- -  -  -  -
DF >         N    0    >    ?                    ?     >       Y  Y  Y  N
CR 01/010402 N    0


     #'S    EXTN    R MW BI EXTN    R MW BI EXTN    R MW BI EXTN    R MW BI
     ------ ------- - -  -  ------- - -  -  ------- - -  -  ------- - -  -
DF   >              N N  N          N N  N          N N  N          N N  N
CR   2..5
CR   6..9
CR   10..13
CR   14..17
CR   18..21
CR   22..25
CR   26..28
```

Figure 8-14. Create ROLMphone Interface Screen

2. Enter **400** in the TYPE field.

   The value designates the RPI type as a ROLMphone 400.

3. Enter the Feature Configuration table number in the TBL No field.

Refer to Worksheet A: in Chapter 3 for the Feature Configuration table number. The example in Figure 8-14. assigns Feature Configuration table number 9.

4. Press (ENTER) to move the cursor to the SPKR PHONE field.
5. Enter **N** in the SPKR PHONE field to disable the speaker phone option.
6. Enter the first line appearance extension in the EXTN 1 field.

   The first line appearance number is listed on the second line of Worksheet C: in Chapter 3.
7. Enter **Y** in the R field. The value defines the extension as a ringing extension.
8. Enter **N** for the MW field to turn off the message waiting feature. The feature is not used in a call queue.
9. Enter **N** for the BI field to turn off the buzz intercom feature. The feature is not used in a call queue.
10. Enter **N** for the CLD NME field to turn off the called name feature. The feature is not used in a call queue. The cursor moves to the EXTN field on the CR 2..5 line.
11. Enter the next line appearance extension in the EXTN field.

    Refer to Worksheet C: in Chapter 3 for a list of line appearance extensions.
12. Enter **Y** in the R field.
13. Enter **N** for the MW field to turn off the message waiting feature.
14. Enter **N** for the BI field to turn off the buzz intercom feature.
15. Repeat Steps 11 through 14 for each line appearance extension listed on Worksheet C:. You must enter an extension for each key up to key number 9.
16. Enter the first analog voice extension at the EXTN field for key number 9.

    The example in Figure 8-15. uses extension 501 as the first analog voice port.
17. Enter **N** for the R, WM, and BI fields.
18. Repeat Steps 16 and 17 for each analog voice port extension listed on Worksheet B:.
19. After you enter each analog voice port extension, press (ENTER) for each of the remaining fields. You do not have to enter or change the information in the fields.
20. When you finish entering the information, your screen appears as shown in Figure 8-15. Check the screen to make sure you entered the information correctly.

```
   COMMAND: CRE RPI 01/010402


                   REF       TBL BUZZ             SPKR                    CLD
   PAD       DATA NO.  TYPE NO. INTERCOM VOICE C PHONE EXTN 1  R  MW BI NME
   --------- -    ---- ---- --  -------  ------- -     ------- -  -  -  -
DF >         N    0    >    ?                    ?     >       Y  Y  Y  N
CR 01/010402 N    0    400  9                    N     551     Y  N  N  N


     #'S    EXTN    R MW BI EXTN    R MW BI EXTN    R MW BI EXTN    R MW BI
     ------ ------- - -  -  ------- - -  -  ------- - -  -  ------- - -  -
DF   >              N N  N          N N  N          N N  N          N N  N
CR   2..5   552     Y N  N  553     Y N  N  554     Y N  N  555     Y N  N
CR   6..9   556     Y N  N  557     Y N  N  558     Y N  N  501     N N  N
CR   10..13 502     N N  N  503     N N  N  504     N N  N
CR   14..17
CR   18..21
CR   22..25
CR   26..28
```

Figure 8-15. Create ROLMphone Interface Screen

In the example, extensions 551 through 558 were programmed as the eight line appearances for the ROLMphone 400 call queue. The analog voice ports associated with their busy keys were extensions 501, 502, 503, and 504. If you have a system with more than four ports, your screen contains more analog voice port extension assignments.

Proceed to the next section, *Administer the Hunt Group*.

Administer the Hunt Group

The SID uses one "hunt group" or switch group that contains the eight call appearance extensions assigned to the ROLMphone 400. You assign the Intuity system number as the pilot number for the hunt group. The eight call appearances are assigned to the pilot number. Worksheet C: in "Chapter 3, Switch Integration Planning", contains the pilot number.

NOTE:
AT&T recommends that you do not administer a name for the voice port hunt group. If you administer a name, the CBX must pass the information to the SID for each call. The increased information slows the integration process.

Use the following procedure to set up a hunt group for the SID.

1. Enter **CRE HD_Group** and the hunt group pilot number at the COMMAND prompt.

   Enter the hunt group pilot number after the **CRE HD_Group** (Create Hunt Group) command. The pilot number is the extension subscribers use to call the Intuity system. The example in Figure 8-16. uses 500 as the pilot number. Refer to Worksheet C: for the pilot number assigned to the Intuity system.

   After you enter the command, you see the screen shown in Figure 8-16. The cursor appears in the Group No. field.

```
COMMAND: CRE HD_Group 500


Pilot  Group  Group       Fwd/Busy
No.    No.    Type   Cos  C   Number
---    ---    ----   ---  -   ------
500    1      H      0    N

EXTN  EXTN  EXTN  EXTN  EXTN  EXTN  EXTN  EXTN  EXTN
----  ----  ----  ----  ----  ----  ----  ----  ----
551   552   553   554   555   556   557   558
```

Figure 8-16. Hunt Group Assignment Screen

2. Press ENTER to accept the default value of **1** in the Group No. field.
3. Enter **H** in the Group Type field.

   The value defines the group type as a hunt group.
4. Press ENTER to accept the default value of **0** in the COS field.

   No COS features are used for the hunt group.

5. Enter **N** in the Fwd/Busy C field.

   Hunt groups do not use forwarding.

6. Enter the first hunt group call appearance extension in the first EXTN field.

   Refer to Worksheet C: in Chapter 3 for a list of call appearance extensions.

7. Enter the next hunt group call appearance number in the next EXTN field.
8. Repeat Step 7 until you enter all hunt group call appearance extensions listed on Worksheet C:.
9. When you finish entering call appearance extensions, press [ENTER] twice to exit the screen and complete the process.

You have finished the ROLM 9000 or 9751 CBX switch administration. Proceed to "Chapter 9, Switch Integration Device Administration", to configure the switch integration device.

Switch Integration Device Administration

9

The instructions in this chapter explain how to configure the SID to integrate with a ROLM 8000, 9000, or 9751 series CBX and an Intuity system. The installation technician administers the SID based on ROLM CBX administration information provided by the customer. As you administer the SID configuration, you must perform the following tasks:

- Administer the basic parameters
  - Number of analog voice ports
  - Message desk number
  - CPID pad string
  - MWI pad string
  - MWI feature
- Administer the extensions and logical terminal numbers
- Save and start the configuration
- Administer the serial data links
- Change the system parameters
  - Adjust the LCD contrast
  - Adjust the volume
  - Set the date and time
  - Set the remote access device control
- Set the security level

Continue with the instructions on the next page to administer the SID.

NOTE:
Multiple SID configurations require special administration on the switch and SID. Call your Remote Service Center for information on administering these configurations.

Check the SID

The first process you must perform is to turn on or power on the SID. Use the following procedure to power on the SID.

1. Toggle the SID power switch to the *on* position. The power switch is located on the back of the SID on the right side.

   After you power on the SID, you see the following screen.

```
VoiceBridge Bootstrap Module              V1.xx

Selftest............
```

   When you see the screen, the system is "boostrapping" or initializing. You see the App... and Com... messages appear briefly on the screen. The procedure lasts about 20 seconds.

2. Continue to watch the SID until you see the following screens.

```
ROLM Integration Module                   V1.xx

Copyright 1992 Voice Technologies Group
```

```
     SETUP       1-Params       2-Ports      3-Clear

                 4-Advanced
```

3. To access the ROLM Main Menu, press [FUNC] on the SID keypad.

   After you press the key, you see the ROLM Main Menu as shown in the following example.

```
      ROLM       1-View         2-Utils      3-System

                 4-Setup        5-Logs       6-Diags
```

Continue to the next section, *Administer the Basic Parameters*.

Administer the Basic Parameters

In "Chapter 3, Switch Integration Planning", you completed switch integration planning worksheets and determined the values for each of the basic parameters. If you did not complete the worksheets, turn to Appendix 3 and complete them now before you proceed with the instructions in this chapter.

After you complete the worksheets in Appendix 3, continue with the instructions in this section to configure the basic parameters.

NOTE:
For a *multiple SID configuration*, you must administer basic parameters for each SID.

1. To access the basic parameters edit screens, press (FUNC) on the SID keypad.

   After you press the key, you see the ROLM Main Menu as shown in the following example.

```
ROLM        1-View        2-Utils       3-System

            4-Setup       5-Logs        6-Diags
```

2. Press (4) on the SID keypad to select the Setup option.

   After you press the key, you see the Setup menu as shown in the following example.

```
SETUP       1-Params      2-Ports       3-Clear

            4-Advanced
```

3. Press (1) on the SID keypad to access the first in a series of eight Params edit screens as shown in the following example.

```
SETUP       Number of Ports           20
```

4. Enter the number of analog voice ports from Worksheet A: that the SID must support for the Intuity system.

5. Press ▼ to confirm the number and move to the next basic parameter edit screen, the MSG Desk Number screen, as shown in the following example.

```
SETUP       Msg Desk Number:          001
```

6. Enter the three-digit message desk number from Worksheet A: in Appendix 3.
7. Press ▼ to confirm the number and move to the next basic parameter edit screen, the CPID Pad String screen, as shown in the following example.

```
SETUP       CPID Extension Length:        3

            CPID Pad String:              0000xxx
```

8. Press ENTER to accept the default CPID Extension Length number of 3.

   The extension length must match the extension length assigned on the switch. If the switch has a different extension length number, enter that number instead of the default.
9. Press ENTER to accept the default CPID Pad String number of 0000xxx.
10. Press ▼ to move to the next basic parameter edit screen, the MWI Pad String screen, as shown in the following example.

```
SETUP       MWI Extension Length:         3

            MWI Pad String:               0000xxx
```

11. Press ENTER to accept the default MWI extension length number of 3.

    The extension length must match the extension length assigned on the switch. If the switch has a different extension length number, enter that number instead of the default.
12. Press ENTER again to accept the default MWI Pad String number of 0000xxx.
13. Press ▼ to move to the next basic parameter edit screen, the MWI Feature screen, as shown in the following example.

```
SETUP       MWI Feature:                  ENABLE

<-   ->
```

14. Set the value for the message waiting feature as listed on Worksheet A: in Appendix 3.

    The SID defaults to Enable. If you want to turn off the feature, press the left or right arrow key to change the value to Disable.

15. Press ▼ to move to the next basic parameter edit screen, the MWI Interleave screen, as shown in the following example.

```
SETUP      MWI Interleave:              5_
```

16. Press ▼ to accept the default value and move to the next basic parameter edit screen, the Call Sequence screen, as shown in the following example. Check Worksheet A: in Appendix 3 to verify that you need to use the default value.

```
SETUP      Call Sequence:            Data/Call
```

17. You have finished entering the ROLM basic parameter information. Press FUNC to save the basic parameter information and return to the ROLM Main Menu.

NOTE:
For a multiple SID configuration, repeat this procedure for each SID.

Proceed to the *Assign Extensions and LTNs* section that follows to continue the SID configuration.

Assign Extensions and LTNS

As you assign extensions and LTNs, you associate an LTN (Centrex LTN) with each analog extension used by an Intuity system. For each extension, you must assign the same LTN as the Intuity system assigns to the extension. If you do not assign the same LTN, the SID does not integrate calls properly. Read the section on the AutoFill feature before you assign extensions and LTNs.

Use the following instructions to assign extensions and LTNs.

1. To access the extension and LTN edit screens, press FUNC on the SID keypad.

After you press the key, you see the Setup menu as shown in the following example.

```
SETUP      1-Params        2-Ports      3-Clear
           4-Advanced
```

2. Press (2) to select Ports and access the chain of screens used to enter and edit extension and LTN information.

   After you press the key, you see the VM Port screen as shown in the following example.

```
VM Port 1    LTN:                          0001
             Extension:                    ------
```

   The VM Port screen and the next series of screens link together. The number of VM Port screens linked together depends on the number you entered on the Number Of Voice Mail Ports screen in the *Basic Parameters* section. If you entered 4, for example, the SID would link 4 VM Port screens together.

   NOTE:
   In a multiple SID configuration, each SID may have up to 8 extensions assigned. The extensions administered across all SIDs should be contiguous with the extensions on the SIDs previously and subsequently administered.

3. If you do not want to use the default LTN, use the keypad to type an LTN over the default. The sample screen uses an LTN of 0001.

   In Appendix 3, you completed Worksheet B: Extension/LTN Plan. Use Worksheet B: as you enter LTNs and extensions.

4. Press (ENTER) to confirm the LTN. The cursor moves to the Extension field.

5. Use the keypad to type an extension for the LTN.

   Use Worksheet B: as you enter LTNs and extensions.

   NOTE:
   Each VM Port screen contains a default LTN, starting with 0001. If you want to use the default, press (ENTER) to select the default and move the cursor to the Extension field. Enter the extension number for the LTN. Press (ENTER) to confirm the number then press (▼) to move to the next screen.

6. After you enter the extension, press [▼] to move to the next VM Port screen as shown in the following example.

```
VM Port 2    LTN:                          0002

             Extension:                    211__
```

   In the example, notice that the LTN default automatically increased by one to 0002. You also can set the extension field to automatically increase by using the Autofill feature. For more information on the Autofill feature, refer to the section titled *Using Autofill*.

7. Repeat steps 4 through 6 until you have entered an LTN and an extension for each analog voice port.
8. After you have entered valid LTNs and extensions for all screens, press [FUNC] to return to the ROLM Main Menu.

Using AutoFill

If you use consecutive extension numbers, numbers that increase by one, the SID provides an *AutoFill* feature that automates the entry process. Using AutoFill, you enter the first extension number on the first VM Port screen. As you move to the next VM Port screen, AutoFill adds one to the extension you entered and places the number in the Extension field.

Example: At the first VM Port screen for a four port configuration, you enter **210** in the Extension field. After selecting AutoFill, you move to the next VM Port screen. The SID adds one to the extension and places 211 in the Extension field. On the next screen, the SID places 212 in the field and 213 in the extension number field on the fourth (last) screen.

Follow the instructions on the next page to use the AutoFill feature.

1. After accessing the first VM Port screen as instructed in the previous section of this document, enter an extension number in the Extension field. The following example uses 210 as the first extension number.

```
VM Port 1    LTN:                          0001

             Extension:                    210__
```

2. Position the cursor on the extension number you entered.
3. Press the Mode key for editor help.

After you press the key, you see an editor help screen as shown in the following example.

```
EDIT      1-Overtype     2-Insert      3-Clear

          4-Undo         5-AutoFill    6-Lockport
```

4. Press (5) to activate the AutoFill option. The SID now uses the number you entered in the first extension field as the base number, adds one to the number for each screen, and places the new number in the extension fields of the remaining screens. In the example, 210 was used as the first extension number. AutoFill automatically places the extension numbers 211, 212, and 213 into the second, third and fourth screens and returns you to the VM PORT0 screen.

If only part of your extensions are numbered consecutively, you can still use the AutoFill feature.

Example: You have a 12 port system. The five extension numbers from 100 to 104 are consecutive. After extension 104, your extensions skip to 200 and continue consecutively to 206. To use the AutoFill feature, follow the regular Autofill instructions for numbers 100 to 104. When you reach the screen that contains extension 105, move the cursor to the Extension field. Enter **200** in the field and turn on AutoFill again. The SID places extensions 201 to 206 in the remaining 6 edit screens.

You also can use AutoFill for LTN data. If you need to start your LTNs at 0010, for example, enter **0010** into the first screen. Turn on AutoFill. AutoFill enters 0011 and up in the LTN fields of the remaining screens.

Continue to the procedure in the next section, *Saving and Starting the Configuration*.

Saving and Starting the Configuration

After you administer the basic parameters and assign extensions and LTNs, you must save the configuration. You also can start the integration at this point, although you should perform the tasks in the *Administer Serial Data Links* section to check the default settings for the SMDI communication link.

Use the following instructions to save the configuration and start the system.

1. Press [FUNC] on the SID keypad.

   After you press the key, you see the Setup menu.

2. Press [FUNC] again to return to the ROLM Main Menu.

After you press the key and return to the ROLM Main Menu, the SID checks the current configuration against the information you entered. Because you made changes to the configuration, the SID places the following prompt on the screen.

```
SAVE EDITS?       1-Yes            2-No
```

3. Press (1) to select Yes and save your configuration changes.

   After you press the key, the SID saves the information you entered and shows the following message on the screen.

```
Setup Saved...
```

4. After a short pause, the SID places another prompt on the screen as shown below.

```
START SYSTEM?     1-Yes            2-No
```

5. If you want to start the integration, press (1) to select Yes.

   If you are not ready to start the integration, press (2) to select No.

   After you press (1) you see the Restarting System... message on the screen. The SID pauses for a few seconds then starts the integration. When the integration starts, you see the VM_Mon screen as shown in the following diagram.

```
VM_MON Idle
```

When the SID receives calls, the screen changes to show the SMDI packet being sent to the Intuity system.

The screen appears similar to the following example.

```
VM_MON:                Line:01 Port:0001-350

500
```

For more information on view modes, refer to "Appendix B, Using Views During Integration", in this document. Continue to the procedure in the next section, *Administer Serial Data Links*.

Administer Serial Data Links

The SID assigns default configurations to both the Centrex (SMDI) and AuxPort communication ports.

You need to check the SID to make sure the defaults are set correctly and match the requirements of your integration. The SID sets the defaults shown in Table 9-1 for the serial data links.

Table 9-1. Serial Data Link Default Values

Link Type	Settings
SMDI:	1200 baud
(Link A)	7 data bits
	1 stop bit
	EVEN parity
AuxPort:	2400 baud
(Link B)	8 data bits
	1 stop bit
	NO parity

Use the following instructions to check or correct the default settings.

1. To access the edit screens used to change the serial data links, press (FUNC) to access the ROLM Main Menu.

   After you press the key, you see the ROLM Main Menu as shown in the following example.

```
ROLM      1-View      2-Utils     3-System
          4-Setup     5-Logs      6-Diags
```

2. Select Utils from the menu by pressing (2) on the SID keypad.

After you press the key, you see the Utils menu as shown in the following example.

```
UTILS      1-Login        2-Date/Time   3-Serial

           4-Misc         5-Upgrade
```

3. Press (3) on the SID keypad to access the Serial menu.

   After you press the key you see the Serial menu as shown in the following example.

```
SERIAL     1-Centrex        2-AuxPort
```

4. Enter the menu item number of the serial data link you need to edit.

   When you select Centrex (SMDI) or AuxPort from the menu, you access four edit screens. Use the screens to set the serial data to the values your application requires. For example, press (1) on the keypad.

   NOTE:
   Both the Centrex and AuxPort edit screens appear the same, except for the edit screen name. The Centrex screens were chosen only as an example in this document. You can select either serial data link or both. You also can use the default values, as described earlier in this section.

5. After you press the key, you see the Baud Rate edit screen as shown in the following example.

```
CENTRX Baud Rate:                          1200

<-   ->
```

6. To change the default value shown, press the left or right arrow key to toggle through the optional values. The value you set for the baud rate must equal the value set for the SID to Intuity system link baud rate. Do not set two different values for these links. Stop pressing the arrow keys when you find the value you want to use.

   NOTE:
   In Appendix 3 you completed Worksheet A: which contained lines for the Centrex baud (SMDI) rate and the AuxPort baud rate. Refer to the worksheet to review the baud rates you selected.

7. Press (▼) to confirm your choice and move to the next screen.

After you press the key, you see the Parity screen as shown in the following example.

```
CENTRX Parity:                          EVEN

<-  ->
```

8. To change the default parity value shown in the field, press the left or right arrow key to toggle through the optional values. Stop pressing the arrow keys when you find the parity value you want to use.
9. Press (▼) to confirm your choice and move to the next screen.

   After you press the key, you see the Byte Length screen as shown in the following example.

```
CENTRX Byte Length:                     7 Bits

<-  ->
```

10. To change the default byte length shown in the field, press the left or right arrow key to toggle through the optional values. Stop pressing the arrow keys when you find the byte length you want to use.
11. Press (▼) to confirm your choice and move to the last screen.

    After you press the key, you see the Stop Bits screen as shown in the following example.

```
CENTRX Stop Bits:                       1

<-  ->
```

12. To change the default stop bit value shown in the field, press the left or right arrow key to toggle through the optional values. Stop pressing the arrow keys when you find the stop bit value you want to use.
13. Press (FUNC) to confirm your choice and return to the ROLM Main Menu. If you need to reconfigure the AuxPort data link, return to step 2.

You have completed the SMDI or AuxPort configuration setup. The SID automatically accepts and saves any information you change.

Continue to the procedure in the next section, *Changing System Parameters*.

Changing System Parameters

The SID provides access to some adjustable global system parameters. You can change the following parameters.

- Time and date
- LCD contrast setting
- Speaker volume
- Remote access device control

Use the instructions in this section to change the system parameters.

Setting the Date and Time

Set the date and time when you install your SID system so error log messages are properly timestamped. Although the date and time are set at the factory, you may need to change the time to correct differences in time zones. Follow the instructions below to set the date and time.

1. Press [FUNC] to access the ROLM Main Menu.
2. Press [2] to access the Utilities menu.
3. Press [2] to access the Date and Time screen.

   After you press the key, you see the DT/TM screen as shown in the following example. The cursor appears in the month field.

```
DT/TM      Date:          11/18/92

           Time           15:35:00
```

4. Place the cursor on the Date field.
5. Enter the correct date in the format MM/DD/YY (month/day/year) by pressing [ENTER] and typing the month, day, and year in each each part of the date field. If the date is correct, do not change the information and proceed to the next step.
6. After you enter the year in the last date field, press [ENTER] to confirm the date and move the cursor to the Time field.
7. Enter the correct time in the format HH:MM:SS (hour:minute:second) by pressing [ENTER] and typing the hour, minutes, and seconds in each each part of the time field. If the time shown is correct, proceed to the next step.
8. Press [FUNC] to return to the ROLM Main Menu.

The SID accepts and uses the information. You do not have to save the information or restart the integration. Continue to the next section, *Adjusting the LCD Contrast*.

Setting the Remote Access Device Control

The SID contains an internal 2400 baud modem for remote maintenance. You must connect an analog line to the modem port. Follow the instructions below to set the control for the modem.

1. Press [FUNC] to access the ROLM Main Menu.
2. Press [2] to access the Utilities menu.
3. Press [4] to access the Miscellaneous Tools menu.

   After you press the key, you see the Misc menu as shown in the following example.

```
MISC      Remote Access:            MODEM

<-   ->
```

4. If you see MODEM in the upper right corner of the screen, press [FUNC] to return to the ROLM Main Menu.

   If you do not see MODEM in the field, press the right and left arrow keys until MODEM appears in the field then press [FUNC] to return to the ROLM Main Menu.

Continue to the procedure in the next section, *Setting a Security Level*.

Setting a Security Level

The various features and functions of the SID are available only at specific security levels. The list below shows each security level and the options available to that level.

- Access Level 0 — The lowest security level. The only options available to level 0 are the ability to view integration activities, change the contrast on the LCD display, see the software version level, and log in to other access levels. The SID normally operates at level 0 and you do not need a password to access level 0.
- Access Level 1 — The second security level. Level 1 allows you to access all level 0 features and all of the tools needed to administer the system. The password for this level is the last five digits of your serial number.
- Access Level 2 — The highest level of security. Level 2 allows you to access all level 0 and level 1 features and several special diagnostic tools available only to trained personnel. Only AT&T authorized personnel can access this level, either on-site or remotely, to perform testing and diagnostics on the SID. The password for this level is only given to authorized personnel.

The factory sets the SID to access level 1. When you first power on the SID, the unit accesses the Setup menu and allows you to access all tools required to perform the administration tasks. You can select a security level for the SID and make the security level part of the configuration. AT&T recommends that you select security level 0 as the normal operating mode for the SID. Users only can access level 0 features, which reduces the risk of tampering by unauthorized users.

Use the following instructions to set the security level on the SID.

1. Press [FUNC] to access the ROLM Main Menu as shown in the following example.

```
ROLM      1-View        2-Utils       3-System

          4-Setup       5-Logs        6-Diags
```

2. Press [2] to select the Utils menu as shown in the following example.

```
UTILS     1-Login       2-Date/Time   3-Serial

          4-Misc        5-Upgrade
```

3. Press [1] to select the Login screen as shown in the following example.

```
LOGIN                   Access Level:    1

<- ->                   Password
```

4. Press the arrow (<- ->) keys to change the access level to 0.
5. Press [ENTER] to save the change. The SID immediately updates your security level.

To log in to level 1, use the instructions above to access the Login screen. Use the arrow keys to set Access Level to 1. The SID now asks you for a password. Type in the level 1 password and press [ENTER] .

NOTE:
As you type the password, you do not see the letters on the screen.

When you complete the instructions in this chapter, proceed to Appendix 10, *Acceptance Tests*, in this document.

Acceptance Test Administration

10

NOTE:
The information presented in this chapter represents guidelines for administering the ROLM CBX to integrate with an Intuity system. Each switch may have a different administration. The switch administration process should be performed by a trained ROLM technician. *AT&T services personnel will not administer the ROLM CBX.*

Acceptance tests begin after you complete the initial Intuity system administration and administer two test subscribers. The process includes call-through tests to each Intuity system port and voice mail tests for each test subscriber. Before you can perform the acceptance tests, though, you must administer the two test subscribers on the ROLM CBX. Use the instructions in this chapter to administer the test subscribers before you perform the acceptance tests.

This chapter explains how to administer two test subscribers on the ROLM CBX for acceptance tests. If you have another type of switch, refer to the documentation provided with that switch or the switch integration package for more information.

Forwarding a subscriber to the SID pilot number provides the subscriber with integrated voice mail services. Examine the needs of the individual users when you determine the call forwarding conditions.

NOTE:
ROLMphone users should already have a message waiting button defined on their phones. If they do not have the button defined, the system administrator must add the feature. By assigning the pilot number of the

SID to the message waiting button, subscribers can retrieve their messages by pressing the button when the message waiting lamp is lit. This chapter provides instructions for adding the feature.

Continue with the procedures in this chapter to administer the switch for acceptance tests. To perform the acceptance test, you must have two test subscriber extensions selected for the tests. Refer to Worksheet D: in "Chapter 3, Switch Integration Planning", to find the test subscriber extensions.

Administer the Test Subscribers

This section contains instructions for three types of switches, the ROLM 8000, 9000, and 9751 series CBX. Administration tasks for the ROLM 9000 and 9751 CBXs are similar and explained in one section. Refer to the *Administer the ROLM 8000 CBX* section if you have a ROLM 8000 CBX. Refer to the *Administer the ROLM 9000 and 9751 CBX* section if you have a ROLM 9000 or 9751 CBX.

CAUTION:
Do not change any subscriber information unless instructed by this document. If you change subscriber information, the subscriber may experience a loss of voice mail service or phone service.

ROLM 8000 CBX Test Subscriber Administration

Use the following instructions to administer test subscribers on the ROLM 8000 CBX. If you have a ROLM 9000 or 9751 CBX, refer to the procedure in the "ROLM 9000 and 9751 CBX Test Subscriber Administration".

1. Log on to the ROLM 8000 administration terminal. For logon instructions, refer to the documentation supplied with the ROLM CBX or contact your system administrator.
2. After you log on to the administration terminal, you see the ? prompt on the screen.
3. Enter **RFD** (Revise Forwarding) at the prompt.
4. Enter the test subscriber extension at the EXTN prompt. Refer to Worksheet D: in Chapter 3 for the test subscriber extensions.
5. Enter the SID pilot number at the FWD prompt. Refer to Worksheet C: in Chapter 3 for the pilot number.
6. Enter **15** at the FLAG prompt. 15 instructs the CBX to forward a call to the SID under all conditions.

7. Enter **0** at the second FWD prompt.
8. Enter **0** at the second FLAG prompt. After you enter the information, the screen appears as shown in Figure 10-1.

```
? RFD
EXTN: 201
FWD: 500
FLAG: 15
FWD: 0
FLAG: 0
```

Figure 10-1. Forward Calls to the Pilot Number Screen

Repeat steps 1 through 8 for the second test subscriber. After you administer the two test subscribers, return to Chapter 4, *Intuity AUDIX Administration and Test* in *Intuity Software Installation*, 585-310-140.

NOTE:
Some subscribers may not have the message waiting button defined on their ROLMphone 400 sets. For message waiting button definition instructions, refer to the *Defining the Message Waiting Button* section at the end of this chapter.

ROLM 9000 and 9751 CBX Test Subscriber Administration

Use the following instructions to administer test subscribers on the ROLM 9000 and 9751 CBX. If you have a ROLM 8000 CBX, refer to the procedure in the "ROLM 8000 CBX Test Subscriber Administration".

1. Log on to the ROLM CBX administration terminal. For logon instructions, refer to the documentation supplied with the ROLM CBX or contact your system administrator.

2. After you log on to the administration terminal, you see the COMMAND prompt on the screen.
3. Enter **Mo Ext <test subscriber extension>** (Modify Extension) at the prompt. Refer to Worksheet D: for a list of test subscribers.

   After you enter the command, you see the screen shown in Figure 10-2.

```
COMMAND: MO EXT 201



                                        FORWARD  ON
                           FORWARDING   BSY RNA DND
EXTN    TYPE  COS  TARGET 1 TARGET 2 I E I E I E RINGDOWN NAME
------- ---   ---  -------- -------- - - - - - - -------- ----------
201     EXT   30   500               1 1 1 1 1 1          JOHN SMITH
```

Figure 10-2. Forward Subscriber to Pilot Number Screen

4. Enter the SID pilot number in the Forwarding Target 1 field. Refer to Worksheet C: for the pilot number.
5. Enter **1** in each of the Forward On fields as shown in Figure 10-2.

Repeat steps 1 through 5 for the second test subscriber. After you administer the two test subscribers, return to Chapter 4 in *Intuity Software Installation*, 585-310-140.

NOTE:
Some subscribers may not have the message waiting button defined on their ROLMphone 400 sets. For message waiting button definition instructions, refer to the *Defining the Message Waiting Button* section at the end of this chapter.

Defining the Message Waiting Button

The ROLMphone sets used for acceptance tests must have a message waiting button defined on the phones. If the set does not have the button defined, you must define the button before anyone performs acceptance tests. By assigning the pilot number of the SID to the message waiting button, subscribers can retrieve their messages by pressing the button when the message waiting lamp is lit. Use the procedure in this section to add the feature to the subscriber ROLMphone 400 sets.

1. Using the phone of the first test subscriber, lift the handset and listen for the dial tone.
2. Press [#] [#] [3] on the phone keypad.

   After you enter the numbers, you hear silence. Continue with the next step.
3. Press [0] .

   After you enter the numbers, you hear silence. Continue with the next step.
4. Enter the SID pilot number. Refer to Worksheet C: in Chapter 3 to find the pilot number.
5. Hangup the phone. You have completed the task.

Cut-to-Service

11

NOTE:
The information presented in this chapter represents guidelines for administering the ROLM CBX to integrate with an Intuity system. Each switch may have a different administration. The switch administration process should be performed by a trained ROLM technician. *AT&T services personnel will not administer the ROLM CBX.*

Do not complete any tasks in this chapter until you complete the instructions in *Intuity Software Installation*, 585-310-140.

This chapter explains how to administer the ROLM 8000, 9000, and 9751 CBX to start or "cut-to-service" subscribers on the Intuity system.

If you have another type of switch, refer to the documentation provided with that switch or the switch integration package for more information.

Cutting to service on the ROLM CBX is a switch-based task. You must administer each subscriber and the process may require a large amount of time if you have a large subscriber base. Determine a time and a strategy for administering the subscribers. For example, you may plan to perform the administration at night or during a period of low call volume.

NOTE:
When you cut the subscribers into service, all subscribers receive Intuity system service. You need to prepare the subscribers and train the system attendants before you cut to service.

ROLMphone users should already have a message waiting button defined on their phones. If they do not have the button defined, the system administrator must add the feature. By assigning the pilot number of the SID to the message waiting button, subscribers can retrieve their messages by pressing the button when the message waiting lamp is lit. This chapter provides instructions for adding the feature.

Continue with the instructions on the next page to cut-to-service.

Administer the Subscribers

This section contains instructions for three types of switches, the ROLM 8000, 9000, and 9751 series CBX. Administration tasks for the ROLM 9000 and 9751 CBXs are similar and explained in one section. Refer to the "ROLM 8000 CBX Subscriber Administration" if you have a ROLM 8000 CBX. Refer to the "ROLM 9000 and 9751 CBX Subscriber Administration" section if you have a ROLM 9000 or 9751 CBX.

CAUTION:
Do not change any subscriber information unless instructed to by this document. If you change subscriber information, the subscriber may experience a loss of voice mail service or phone service.

ROLM 8000 CBX Subscriber Administration

Use the following instructions to administer subscribers on the ROLM 8000 CBX. If you have a ROLM 9000 or 9751 CBX, refer to the procedure in the "ROLM 9000 and 9751 CBX Subscriber Administration".

1. Log on to the ROLM 8000 administration terminal. For logon instructions, refer to the documentation supplied with the ROLM CBX or contact your system administrator.
2. After you log on to the administration terminal, you see the ? prompt on the screen.
3. Enter **RFD** (Revise Forwarding) at the prompt.
4. Enter an Intuity system subscriber extension at the EXTN prompt.
5. Enter the SID pilot number at the FWD prompt. Refer to Worksheet C: in "Chapter 3, Switch Integration Planning" for the pilot number.

6. Enter **15** at the FLAG prompt. **15** instructs the CBX to forward a call to the SID under all conditions.
7. Enter **0** at the second FWD prompt.
8. Enter **0** at the second FLAG prompt. After you enter the information, the screen appears as shown in Figure 11-1.

```
? RFD
EXTN: 201
FWD: 500
FLAG: 15
FWD: 0
FLAG: 0
```

Figure 11-1. Forward Calls to the Pilot Number Screen

9. Repeat steps 1 through 8 for each Intuity system subscriber.

After you finish administering system subscribers, the Intuity system installation and administration process is complete. Your system is receiving and processing calls. Refer to "Chapter 2, Switch Integration Device Basics", in *Intuity AUDIX Administration*, 585-310-539, for information on using and maintaining the system.

NOTE:
Some subscribers may not have the message waiting button defined on their ROLMphone 400 sets. For message waiting button definition instructions, refer to the *Defining the Message Waiting Button* section at the end of this chapter.

ROLM 9000 and 9751 CBX Subscriber Administration

Use the following instructions to administer Intuity system subscribers on the ROLM 9000 and 9751 CBX. If you have a ROLM 8000 CBX, refer to the procedure in the "ROLM 8000 CBX Subscriber Administration".

1. Log on to the ROLM CBX administration terminal. For logon instructions, refer to the documentation supplied with the ROLM CBX or contact your system administrator.
2. After you log on to the administration terminal, you see the COMMAND prompt on the screen.
3. Enter **Mo Ext <subscriber extension>** (Modify Extension) at the prompt.

   After you enter the command, you see the screen shown in Figure 11-2.

```
COMMAND: MO EXT 201


                                      FORWARD  ON
                        FORWARDING    BSY RNA DND
EXTN    TYPE  COS  TARGET 1 TARGET 2 I E I E I E RINGDOWN NAME
------- ---   ---  -------- -------- - - - - - - -------- ----------
201     EXT   30   500               1 1 1 1 1 1          JOHN SMITH
```

Figure 11-2. Forward Subscriber to Pilot Number Screen

4. Enter the SID pilot number in the Forwarding Target 1 field. Refer to Worksheet C: for the pilot number.
5. Enter **1** in each of the Forward On fields as shown in Figure 11-2.
6. Repeat steps 1 through 5 for each Intuity system subscriber.

After you finish administering system subscribers, the Intuity system installation and administration process is complete. Your system is receiving and processing calls. Refer to Chapter 2, *Getting Started*, in *Intuity AUDIX Administration*, 585-310-539, for information on using and maintaining the system.

NOTE:
Some subscribers may not have the message waiting button defined on their ROLMphone 400 sets. For message waiting button definition instructions, refer to the *Defining the Message Waiting Button* section at the end of this chapter.

Defining the Message Waiting Button

The Intuity system subscriber ROLMphone sets must have a message waiting button defined on the phones. If the set does not have the button defined, you must define the button for the subscriber. By assigning the pilot number of the SID to the message waiting button, subscribers can retrieve their messages by pressing the button when the message waiting lamp is lit. Use the procedure in this section to add the feature to the subscriber ROLMphone 400 sets.

1. Using the subscriber phone, lift the handset and listen for the dial tone.
2. Press [#] [#] [3] on the phone keypad.

   After you enter the numbers, you hear silence. Continue with the next step.
3. Press [0] .

   After you enter the number, you hear silence. Continue with the next step.
4. Enter the SID pilot number. Refer to Worksheet C: in Chapter 3 to find the pilot number.
5. Hangup the phone. You have completed the task.

Cut-from-Service Procedures

When you install system upgrades or perform system maintenance, you may have to cut the subscribers from Intuity system service. To perform the task, you must change the subscriber administration on the ROLM CBX. Do not perform the cut-from-service tasks unless instructed by one of the documents in the Intuity system documentation sets.

CAUTION:
Do not change any subscriber information unless instructed to by this document. If you change subscriber information, the subscriber may experience a loss of voice mail service or phone service.

Use the instructions in this section to cancel subscriber administration and cut the subscribers from Intuity system service.

Cutting from Service on the ROLM 8000

Use the following instructions to remove subscribers from Intuity on a ROLM 8000 CBX. If you have a ROLM 9000 or 9751 CBX, refer to the procedure in the "Cutting from Service on the ROLM 9000 and 9751 CBX" section. This procedure explains how to forward all calls for subscribers to the attendant. Before you complete the procedure, inform the attendant that the call volume will increase and inform the subscribers that they will experience a loss of voice mail service.

1. Log on to the ROLM 8000 administration terminal. For logon instructions, refer to the documentation supplied with the ROLM CBX or contact your system administrator.
2. After you log on to the administration terminal, you see the ? prompt on the screen.
3. Enter **RFD** (Revise Forwarding) at the prompt.
4. Enter an Intuity system subscriber extension at the EXTN prompt.
5. Enter the attendant extension at the FWD prompt. All calls forward to the number you enter.
6. Enter **15** at the FLAG prompt. **15** instructs the CBX to forward a call to the SID under all conditions.
7. Enter **0** at the second FWD prompt.

8. Enter **0** at the second FLAG prompt. After you enter the information, the screen appears as shown in Figure 11-3.

```
? RFD
EXTN: 201
FWD: 500
FLAG: 15
FWD: 0
FLAG: 0
```

Figure 11-3. Forward Calls to the Attendant Station Screen

9. Repeat steps 1 through 8 for each Intuity system subscriber.

After you finish removing subscribers from service, return to the document that instructed you to remove subscribers from service.

Cutting from Service on the ROLM 9000 and 9751 CBX

Use the following instructions to remove subscribers from Intuity on a ROLM 9000 or 9751 CBX. If you have a ROLM 8000 CBX, refer to the procedure in the "Cutting from Service on the ROLM 8000" section. This procedure explains how to forward all calls for subscribers to the attendant. Before you complete the procedure, inform the attendant that the call volume will increase and inform the subscribers that they will experience a loss of voice mail service.

1. Log on to the ROLM CBX administration terminal. For logon instructions, refer to the documentation supplied with the ROLM CBX or contact your system administrator.
2. After you log on to the administration terminal, you see the COMMAND prompt on the screen.

3. Enter **Mo Ext <subscriber extension>** (Modify Extension) at the prompt.

   After you enter the command, you see the screen shown in Figure 11-4.

```
COMMAND: LI EXT 201



                                      FORWARD  ON
                       FORWARDING     BSY RNA DND
EXTN    TYPE  COS  TARGET 1 TARGET 2 I E I E I E RINGDOWN NAME
------- ---   ---  -------- -------- - - - - - - -------- ----------
201     EXT   30   500               1 1 1 1 1 1          JOHN SMITH
```

Figure 11-4. Forward Subscriber to Pilot Number Screen

4. Enter the attendant station extension in the Forwarding Target 1 field. The system will forward all calls to the attendant station.
5. Enter **1** in each of the Forward On fields as shown in Figure 11-2.
6. Repeat steps 1 through 5 for each Intuity system subscriber.

After you finish removing subscribers from service, return to the document that instructed you to remove subscribers from service.

Troubleshooting and Error Logs

A

Appendix A provides troubleshooting information to help you isolate and correct problems that may occur with an Intuity system integrated with the ROLM 8000, 9000, 0r 9751 CBX. The problems outlined in this appendix only refer to problems related to the integration device and processes. If you do not find your problem in this appendix, refer to *Intuity System Platform Administration and Maintenance*, 585-310-534, for more information.

Switch Integration Device Problems

The SID does not power on.

Possible Reason:	The power cord connection may be loose or disconnected.
Remedy:	Make sure the power cord is firmly plugged into the wall outlet and the SID.
Possible Reason:	The wall outlet may not have power.
Remedy:	Make sure the circuit breaker for the wall outlet is on.
Possible Reason:	The SID power switch may be set to the *off* position.
Remedy:	Turn the SID power switch to the *on* position.
Possible Reason:	The SID may have a bad fuse.
Remedy:	Check the fuse on the SID.

The SID does not boot.

Possible Reason:	The power cord connection may be loose or disconnected.
Remedy:	Make sure the power cord is firmly plugged into the wall outlet and the SID.
Possible Reason:	The wall outlet may not have power.
Remedy:	Make sure the circuit breaker for the wall outlet is on.
Possible Reason:	The SID power switch may be set to the *off* position.
Remedy:	Turn the SID power switch to the *on* position.
Possible Reason:	The SID may have a bad fuse.
Remedy:	Check the fuse on the SID.
Possible Reason:	The SID may have a bad CPU board.
Remedy:	Check all other possible reasons for the problem and perform the recommended actions. If you still have the problem, contact your AT&T service representative.

The SID LCD shows NDSP for every call the SID receives.

Possible Reason:	The ROLMphone 400 station was not configured as a display module on the CBX.
Remedy:	If you have a ROLM 8000 CBX, refer to "Chapter 7, ROLM 8000 CBX Administration" for instructions on configuring the ROLMphone station. If you have a ROLM 9000 or 9751 CBX, refer to "Chapter 8, ROLM 9000 and 9751 CBX Administration".
Possible Reason:	The ROLM CBX and the SID are not properly connected.
Remedy:	Refer to "Chapter 4, Hardware Installation" for instructions on connecting the cables to the SID and the CBX.
Possible Reason:	The SID may have a bad internal board.
Remedy:	Check all other possible reasons for the problem and perform the recommended actions. If you still have the problem, contact your AT&T service representative.

Calls are not integrated.

Possible Reason:	The cables between the SID and the Intuity computer may not be correctly connected.
Remedy:	Refer to "Chapter 4, Hardware Installation", and check the cable connections.
Possible Reason:	The Intuity system may not be correctly administered.
Remedy:	Refer to *Intuity System Administration* and check the administration of the system.
Possible Reason:	The SID may be administered incorrectly.
Remedy:	Refer to "Chapter 9, Switch Integration Device Administration" and check the administration of the system. Make sure the channels and extensions are configured correctly.
Possible Reason:	The baud rate for the SID to Intuity connection may not be set correctly.
Remedy:	Refer to "Chapter 9, Switch Integration Device Administration" and set the baud rate correctly.
Possible Reason:	The subscriber name field administration on the ROLM CBX may be incorrect.
Remedy:	If you have a ROLM 8000, refer to "Chapter 7, ROLM 8000 CBX Administration" and administer the name field. If you have a ROLM 9000 or 9751 CBX, refer to "Chapter 8, ROLM 9000 and 9751 CBX Administration".

Calls are integrated but the message waiting lamp (MWL) does not work.

Possible Reason:	The MWL may not be administered correctly on the Intuity system.
Remedy:	Refer to "Chapter 6, Administering the Intuity System for the ROLM Integration", and check the administration of the system.
Possible Reason:	The packet format and MWL codes are set incorrectly on the switch.
Remedy:	For a ROLM 8000 CBX, refer to "Chapter 7, ROLM 8000 CBX Administration" and set the information correctly. For a ROLM 9000 or 9751 CBX, refer to "Chapter 8, ROLM 9000 and 9751 CBX Administration".
Possible Reason:	The cable between the SID and the Intuity system may be defective.

Remedy:	Replace the cable.
Possible Reason:	The ROLMphone 400 station is not administered in a COS the permits MWCTR.
Remedy:	For a ROLM 8000 CBX, refer to "Chapter 7, ROLM 8000 CBX Administration" and administer the COS correctly. For a ROLM 9000 or 9751 CBX, refer to "Chapter 8, ROLM 9000 and 9751 CBX Administration".

Most calls end with the ABOR message.

Possible Reason:	The busy indicator administration may not be correct for the ROLMphone 400.
Remedy:	For a ROLM 8000 CBX, refer to "Chapter 7, ROLM 8000 CBX Administration" and administer the busy indicator correctly. For a ROLM 9000 or 9751 CBX, refer to "Chapter 8, ROLM 9000 and 9751 CBX Administration".
Possible Reason:	The SID dial plan may not be administered correctly.
Remedy:	Refer to "Chapter 9, Switch Integration Device Administration", to check the LTN/extension administration on the SID.
Possible Reason:	The Intuity system ports are not dialing out or are being called directly.
Remedy:	Use the Intuity System Monitor to observe the ports.
Possible Reason:	The Intuity system IVP4 board may have a bad port.
Remedy:	Use the diagnostic procedures to check the voice ports on the boards.

PBX LED is red constantly.

Possible Reason:	The ROLM modular cable is loose.
Remedy:	Tighten the cable connections.
Possible Reason:	The ROLM modular cable may be defective.
Remedy:	Replace the cable. Refer to "Chapter 4, Hardware Installation", for instructions on connecting the modular cable to the SID and to the CBX.
Possible Reason:	The SID may contain a bad internal board.

Remedy:	Check all other possible reasons for the problem and perform the recommended actions. If you still have the problem, contact your AT&T service representative.
Possible Reason:	The polarity may be set incorrectly for the digital line.
Remedy:	Reverse the polarity for the digital line. Refer to the documentation supplied with the ROLM CBX for instructions on changing the polarity or contact your CBX service representative.

The VM LED is yellow constantly (more than 5% packet transmission error).

Possible Reason:	The cable connecting the Intuity system to the SID is loose.
Remedy:	Tighten the cable connections.
Possible Reason:	The Centrex communications port baud rate, parity, and other settings are not set correctly on the SID.
Remedy:	Refer to "Chapter 9, Switch Integration Device Administration", for instructions on configuring the Centrex link.
Possible Reason:	The Centrex communications port baud rate, parity, and other settings are not set correctly on the Intuity system.
Remedy:	Refer to the administration document in your documentation set for instructions on configuring the port.
Possible Reason:	The Centrex cable may be defective.
Remedy:	Replace the cable. Refer to "Chapter 4, Hardware Installation", for instructions on connecting the Centrex cable.
Possible Reason:	The Intuity system IVP4 board may have a bad port.
Remedy:	Use the diagnostic procedures to check the voice ports on the boards.

VM LED is red constantly (more than 50% packet transmission error).

Possible Reason:	The ROLM modular cable is loose.
Remedy:	Tighten the cable connections.
Possible Reason:	The Centrex communications port baud rate, parity, and other settings are not set correctly on the SID.
Remedy:	Refer to "Chapter 9, Switch Integration Device Administration", for instructions on configuring the Centrex link.
Possible Reason:	The Centrex communications port baud rate, parity, and other settings are not correctly set on the Intuity system.
Remedy:	Refer to the administration document in your documentation set for instructions on configuring the port.
Possible Reason:	The ROLM modular cable may be defective.
Remedy:	Replace the cable. Refer to "Chapter 4, Hardware Installation", for instructions on connecting the modular cable to the SID and to the CBX.
Possible Reason:	The Intuity system IVP4 board may have a bad port.
Remedy:	Use the diagnostic procedures to check the voice ports on the boards.

Error Logs

The SID accumulates and records or "logs" error messages. The error messages can help solve problems and trace errors. You can access the error logs on the SID if you are authorized to use security level 1 features. The error logs also are available to trained support personnel to assist with troubleshooting. Use the instructions in this section to log on to the SID and view the error logs.

1. Press FUNC to access the Main Menu as shown in the following example.

```
ROLM      1-View      2-Utils     3-System

          4-Setup     5-Logs      6-Diags
```

2. Press 5 to select Logs. After you press the key, you see the Logs menu as shown in the following example.

```
LOGS          1-View          2-Purge
```

3. Press 1 to view the error logs. After you press the key, you see the an error log screen similar to the following example.

```
ER_LOG              16-Bad PBX Pkts in 60 secs     I
                    01/12 12:34  01/16 23:14     056
```

Read the explanation of the error log below to understand the information shown on an error log screen.

NOTE:
Your error log screens may appear different than the screen shown in the example.

16	The error code number used by AT&T support personnel when they access the SID through the remote diagnostic modem.
No PBX Pkts in 60 Secs.	Informational text that provides a brief description of the error. In the example, the SID wrote an informational message indicating that no packets had been received from the switch in the previous 60 seconds.
I	A letter that indicates the error type and severity. The error messages can be informational (I), warning (W), or error (E) types.
01/12_12:34	The date and time, rounded to the nearest minute, that the error or warning first occurred.
01/16_23:14	The date and time the error or warning last occurred.
56	The number of times the SID produced the error or warning between the first and last occurrence. The number tells you the how frequently the errors occur. If you see a severe error occurring frequently, contact your support representative.

The SID can record many different errors. All errors are displayed in the same format, explained in the above example. You may use the up arrow and down arrow to scroll through the list of messages. The table on the next page lists all SID error codes and contains a description for each error code.

Code	Description	Type
1	VM Comm Error	Warning
2	No Free VM_IN Packets	Warning
3	Excess Data -- VM_IN Pkts	Warning
4	NULL MWI Pkt from VM_IN_Q	Error
5	Bad MWI Pkt	Warning
6	No Free Centrex Pkts	Warning
7	NULL Cntrx Pkt from OUT_Q	Error
8	MWI Dropped	Error
9	Lockout Timeout	Error
10	AP to CP Cmd Timeout	Error
11	Kernel Error	Error
12	Wait Light Timeout	Warning
13	Idle Task Not Enough Time	Warning
14	Intgr Stall, Reboot Sys	Error
15	Line Dropped	Warning
16	No CBX Pkts in 60 Secs	Information
17	System Startup	Information
18	CP: LCA Not Programmed	Error
19	System Powerdown	Information
20	CP: > 5% Unknown Pkts	Information
21	CP: Lost Carrier Detect	Information
22	CP: > 50% Unknown Pkts	Information
23	CP: Hardware Watchdog Tout	Error
24	CP: Loss of CD > 15 Min	Error
25	No CP activity in 30 Secs	Error

Code	Description	Type
26	CP: Gained Carrier Detect	Information
27	Bad MWI Pkts > 50%	Information
28	Bad MWI Pkts > 5%	Information
29	CP: Unknown PBX Packet	Error
30	Cntrx Not Xmting, Reboot	Error
31	CP: Error Pkt Overflow	Error
32	Hardware Watchdog Reboot	Error
33	Integration Stop	Information
34	Integration Start	Information
35	No Display Info	Error
36	Hardware Reset	Information
37	VM Remote Reset	Information
38	Software Reset	Information
39	Boot Error: RTC	Error
40	Boot Error: SCC	Error
41	Boot Error: LED	Error
42	Boot Error: Modem	Error
43	Boot Error: DPRAM	Error
44	VM Comm Error > 5%	Error
45	VM Comm Error > 50%	Error
46	CP Load Timeout	Error
47	Wait Disp Timeout	Warning
48	Wait Spl Light Timeout	Error
49	Wait Any Light Timeout	Error
50	Wait Light State Timeout	Error

From time to time, you may need to purge your error logs. You can purge error logs on the SID if you have authorization to access security level 1 features. Use the following instructions to purge error logs.

1. Press FUNC to access the Main Menu.

2. Press (5) to select Logs. After you press the key, you see the Logs menu as shown in the following example.

```
LOGS          1-View          2-Purge
```

3. Press (2) to select Purge. After you press the key, you see the screen shown in the following example.

```
PURGE LOGS?     1-Yes           2-No
```

4. Press (2) to cancel the purge. The SID save the error logs.

   Press (1) to erase the error logs.

   The SID starts to record new error messages after you purge the old logs. After the SID completes the purge, you see the following message on the screen.

```
Purging Logs...
```

Clearing Your Configuration

When you add voice mail ports or change the switch dial plan, you may need to reconfigure the SID. In most cases, you can accomplish the task by editing the existing setup and restarting the system. If required, the SID provides the capability to restore the factory default settings.

To clear your configuration and restore the factory setting, use the following instructions.

1. Press [FUNC] to access the Main Menu.
2. Press (4) to select the Setup option. After you press the key, you see the Setup menu as shown in the following example.

```
SETUP      1-Params      2-Ports      3-Clear
           4-Advanced
```

3. Press (3) to select Clear. After you press the key, you see the Clear Setup screen as shown in the following example.

```
CLEAR SETUP?      1-Yes            2-No
```

4. Press (2) to cancel the clear and return to the Setup menu.

   Press (1) to restore the factory default settings. When you clear your configuration, you remove all global parameter information, dial plan, logical terminal number information, and Centrex serial port information. The contrast and Enhanced MWI handling settings are restored to the factory defaults. The only information preserved are your error logs and statistical tables. Using the clear command stops the integration. You must configure and start the system to integrate calls.

Test the SID ROLMphone Set Emulation

If the SID integration does not operate properly after you administer the system, use the procedure in this section to test the SID's ROLMphone emulation.

To test the ROLMphone emulation, you must perform the following tasks.

- Receive a call on the SID
- Place a call from the SID
- Transfer a call with the SID
- Light a message waiting lamp with the SID

Use the instructions in this section to test the SID emulation.

1. Press (FUNC) to access the ROLM Main Menu.

   After you press the key, you see the ROLM Main Menu as shown in the following example.

```
ROLM      1-View        2-Utils      3-System
          4-Setup       5-Logs       6-Diags
```

2. Press (6) on the SID keypad to access the Diagnostics menu.

After you press the key, you see the Diags menu as shown in the following example.

```
DIAGS        1-Emulator        2-Centrex
```

3. Press (1) on the SID keypad to access the telephone emulator screen. After you press the key, you see the EM screen as shown in the following example.

```
EM   00000000000000   oooooooooooooooooooo  O O
```

The top line of the EM screen contains the following sections:

- The first eight characters show the state of the call appearance lamps on the ROLMphone 400.
- The next 20 characters show the state of the lamps on the busy indicators.
- The last set of upper-case characters shows the state of the message waiting lamp and the call waiting lamp on the ROLMphone.

The bottom line of the screen is split and reflects the first 20 characters of each line on the ROLMphone LCD display.

When the switch updates the lamp status on the ROLMphone 400, the EM screen changes. Use Table A-1 to understand the EM screen display characters.

Table A-1. Lamp Status for Appearance Fields and Feature Buttons

Character	Lamp Status: Appearance Field and Feature Buttons
O or o	dark - no activity
F or f	flashing - ringing
F or f	flicker steady - hold or transfer
E or e	flicker pause - error
S or s	steady - selected or off-hook
B or b	busy

In addition to viewing the phone activity, the EM screen also allows you to manipulate the phone. Table A-2 shows you the SID keys and the action the keys produce on the EM screen.

Table A-2. SID Key Features

Key	Action
1,2,3,4,5,6,7,8,9,0	Data Entry
*,#	Data Entry
Func	Return to the main menu
Mode	Key code prefix command
Up arrow	Go off hook
Down arrow	Go on hook
Left/Right arrows	No action
Enter	Toggle the speaker on or off

By using the SIDs ability to display the telephone state and to manipulate the telephone, you can perform four tests to determine if the SID is properly installed as a ROLMphone 400 digital station. Continue to the next section, *Test One: Receive a Call at the SID*, to perform the first test.

Test One: Receive a Call at the SID

Perform the first test by placing a call from a test subscriber station to the Intuity system.

1. Select a subscriber to use for the test. The example in this section uses subscriber John Smith at extension 201.
2. From the test subscriber's phone, dial the extension number assigned to the SID. After you dial the number, you see the EM screen as shown in the following example.

```
EM        FOOOOOOO  oooooooooooooooooooo  O O

201       SMITH,  JOHN
```

The first call appearance, *f* in the example, has changed to a ringing state. This indicates that a call is available on the selected appearance. You can answer the call by pressing [MODE] [0] [1] to go off-hook. The EM screen changes as shown in the following example.

```
EM        SOOOOOOO  oooooooooooooooooooo  O O

201       SMITH,  JOHN
```

If you speak into the test subscriber's handset, you can hear the voicethrough the SID's speaker. To end the test, press [MODE] [1] [7] to hang up the call.

If the test fails, perform the same troubleshooting procedures on the switch that you would perform if a ROLMphone 400 digital set was connected to the CBX instead of the SID. Continue to the next test procedure, *Test Two: Place a Call from the SID*.

Test Two: Place a Call from the SID

In the second test, you place an outgoing call from each call appearance. To press a button on the phone that is not obvious on the SID keypad, use Table A-3 to determine the correct SID key to use for the phone set key. To use the keys shown in the table, you must first press [MODE].

Table A-3. SID Key Mapping for ROLMphone Station Keys

Press MODE then	To Emulate
01	call appearance 1
02	call appearance 2
03	call appearance 3
04	call appearance 4
05	call appearance 5
06	call appearance 6
07	call appearance 7
08	call appearance 8
11	Transfer
12	Hold
14	Connect
15	MWCTR

1. Press [MODE] [0] [5] to initiate a call from the fifth appearance.
2. Press [MODE] [0] [1] to place the SID in an off-hook state.

   After you press the keys, you hear dial tone and the EM0 form changes as shown in the following example.

```
EM        0000S000  oooooooooooooooooooo  0 0

551       SID
```

3. Use the SID to dial the test subscriber's extension. For example, if the subscriber's extension was 201, you would press [2] [0] [1].

After you dial the number, the EM screen changes to the screen shown in the following example. The test subscriber's phone should be ringing.

```
EM        SOOOOOOO  oooooooooooooooooooo  O O

201       SMITH,  JOHN
```

4. Press [MODE] [1] [7] to release the call.

Use this test procedure on each of the call appearance buttons.

Continue to the next section, *Test Three: Transfer a Call with the SID*.

Test Three: Transfer a Call with the SID

In the third test, you transfer a call using the SID. To perform the test, you place a call to the SID then transfer the call. You need two test subscriber extensions to perform the test. Use the following instructions to complete the test.

1. Using the test subscriber telephone, dial the extension number of the SID. After you dial the number, you see the EM screen as shown in the following example.

```
EM        FOOOOOOO  oooooooooooooooooooo  O O

201       SMITH,  JOHN
```

2. Answer the call on the SID by pressing [▲] on the SID keypad to go off-hook. The EM screen appears as shown in the following example.

```
EM        SOOOOOOO  oooooooooooooooooooo  O O

201       SMITH,  JOHN
```

3. Transfer the call by pressing [MODE] [1] [1] . You hear a dial tone and the screen appears as shown in the following example.

```
EM   SOOOOOOO   oooooooooooooooooooo  O C
```

The call message waiting lamp is lighted which indicates a transfer. Enter the subscriber extension to which you want to transfer. For example, is the subscriber extension is 202, enter [2] [0] [2] .

After you enter the extension, the EM screen changes as shown in the following example.

```
EM        SOOOOOOO  oooooooooooooooooooo  O O

202       DOE,  JANE
```

4. Release the transfer by pressing [MODE] [1] [4] .

   The switch completes the transfer. The first subscriber extension is now connected to the second subscriber extension and not the SID. After the transfer, you see the EM screen as shown in the following example.

```
EM   OOOOOOOO   oooooooooooooooooooo  O O
```

You have completed the transfer test. Proceed to the next section, *Test Four: Lighting a Message Waiting Lamp with the SID*.

Test Four: Lighting a Message Waiting Lamp with the SID

In the final emulation test, you light a message waiting lamp through the SID. Use the following instructions to complete the test.

1. At the EM screen, press [MODE] [1] [8] to select the last call appearance. After you press the keys, you see the EM screen as shown in the following example.

```
EM   OOOOOOOS   oooooooooooooooooooo  O O

558   SID
```

2. Dial the extension of the subscriber then [MODE] [1] [5] .

After you dial the extension, the EM screen appears as shown in the following example.

```
EM        0OOOOOOS  oooooooooooooooooooo  O O

201       SMITH,  JOHN
```

The message waiting lamp remains off, indicating that the subscriber's MWI lamp is dark.

3. Press [MODE] [1] [5] on the SID keypad to light the lamp.
4. To turn the message waiting lamp off, repeat steps 1 through 3, but use the MCK key, or [MODE] [1] [6] on the SID keypad.

If you completed all four test without any problems, the ROLMphone station emulation is configured correctly and ready for the integration. If any of the tests did not work correctly, consult with the switch technician to confirm that the ROLMphone digital station set emulation is configured properly.

Special Processing for Message Waiting Lamps

NOTE:
The instructions in this section only can be performed by trained AT&T software specialists.

The SID can buffer up to 4000 individual message waiting transactions and wait for small intervals of time to perform the transactions. Incoming calls receive a higher priority. If you use the Statistics View and discover that the SID is holding a large number of MWL transactions, you can perform one of the following actions.

- You can alter the MWL Interleave Factor. By decreasing the MWL Interleave Factor, the speed of transactions out of the queue increases, but call processing speed decreases. See the documentation supplied with your switch for more information.
- You can use the SID's enhanced MWL processing. Continue with the instructions in this section to use the enhanced MWL processing.

On a very active voice mail system, a subscriber can receive multiple messages in a very short period of time. Each message turns on the MWL which quickly increases the size of the buffer. Enhanced MWL handling insures that only a single entry in the MWL queue is used for a specific subscriber, which reduces the queue loading.

For example, the Intuity system receives three MWL requests in rapid succession. The first turns on John Smith's lamp, the second turns off J. Doe's lamp, and the third turns on John Smith's lamp. Each is a valid request and each is queued for processing. John Smith's lamp does not need to be lit twice, however.

Enhanced MWL processing defaults to disabled and the SID queues and processes all MWL requests in sequence. In the example above, all three requests would be processed and John Smith's lamp would be lit twice in quick succession.

If you enable enhanced MWL processing, the MWL command for John Smith is sent to the queue as a normal request. Any future requests for John Smith overwrite the first, insuring that John's lamp is only turned on once and set to the state that the voice messaging system expects at the time of the operation. When enhanced MWL processing is activated, the number of requests made by Intuity can be considerably larger than the actual number of transactions undertaken by the SID.

Use the instructions on the next page to enable the enhanced MWL processing feature.

1. Press [FUNC] to access the the Setup menu as shown in the following example.

```
SETUP      1-Params      2-Ports      3-Clear

           4-Advanced
```

2. Press [4] to select the Advanced option. After you press the key, you see the Advnc screen as shown in the following example.

```
ADVNC        MWI Compress:      OFF

<-   ->
```

3. Use the left and right arrow keys to turn MWL Enhanced processing to *On*.

After you set enable MWL Enhanced processing, the SID automatically begins to use the feature. You do not have to save or restart the configuration.

Using Views During Integration

B

The SID provides you with three real-time views of the integration process:

- View mode
- Statistics mode
- Metrics mode

Each mode shows you different information in a common screen layout. A typical view mode appears as shown in the following example.

VW_MON	Line:02 Port:0002-351	OK
201	SMITH, JOHN	

View modes remain on the screen, constantly changing as calls and message waiting transactions are processed. Use the information in this appendix to access and use the view modes.

View Mode

The first option on the View menu is the View mode. The mode permits you to observe transactions as they occur at the SID. View mode is a useful tool that provides condensed, real-time reporting of all transactions between the SID and the Intuity system. View mode is set as the default display mode for a configured SID. When the system first boots up and is idle, the display appears as shown in the following example.

VW_MON Idle

Use the following instructions to access the View mode.

1. At the ROLM Main Menu, press 1 to select the View option. After you press the key, you see the View menu as shown in the following example.

VIEW	1-Monitor	2-Stats	3-Metrics

2. Press 1 to select the Monitor option and access the View mode screen as shown in the following example.

VW_MON	Line:02 Port:0002-351		OK
201	SMITH, JOHN	BFWD 202	DOE, JANE

3. To exit the View mode screen, press MODE to return to the ROLM Main Menu.

When transactions are being processed, the screen updates continuously. The following descriptions explain the contents of each field in the example View mode screen. Each type of view screen contains similar fields.

Line:02	The field indicates the line appearance button from which the SID processed the call.
Port:0002-351	The field shows you the LTN sent to the Intuity system and the extension to which the call was transferred. The SID uses the LTN/extension pairing you administered in "Chapter 9, Switch Integration Device Administration".
OK	The field informs you of the status of the call transfer process. ■ OK tells you that the SID successfully transferred the call to the Intuity system. ■ RTRY indicates that the SID is again attempting the transfer operation. ■ ABOR indicates that the caller disconnected during the transfer. ■ FAIL indicates that the SID could not transfer the call. ■ NDSP indicates that the SID could not retrieve display information from the ROLMphone set.
201 SMITH, JOHN	The second line of the display shows you a duplicate of each line of the ROLMphone display. In the example, extension 201 called extension 202, which was busy. The SID intercepted the call because the subscriber stations were programmed to forward to the SID during ring-no-answer and busy situations. The SID informed the Intuity system that the calling party was 201, the called party was 202, and the call was not answered because the extension was busy.

When the SID processes a message waiting command, the screen appears as shown in the following example.

```
VW_MON

                    MWI SET    Ext 201      OK
```

The example indicates that the message waiting lamp at extension 500 is turned on. The MWI field can contain the following values.

- SET — Indicates that the MWI is turned on.

- CLEAR — Indicates that the MWI is turned off.
- RTRY— Indicates that the MWI process is being repeated.
- FAIL— Indicates that the MWI process failed.

If all of the analog ports on the Intuity system are busy, you see the View mode screen as shown in the following example.

```
VW_MON        Line:01 Waiting for Port
```

As soon as an analog port becomes available, the SID processes the call and the VIEW0 mode screen updates. The SID processes as many MWIs as possible when waiting for an open port. The View mode screen appears as shown in the following example.

```
VW_MON    Line:01 Waiting for Port

          MWI Clear Ext 501          OK
```

If you attempt to use the view monitor before configuring the SID, the warning shown below appears on your screen. You must first configure your system before you use the view modes.

```
VW_MON  Integration Stopped
```

Using Statistics Mode

Use the following instructions to use the Statistics monitor mode.

1. Access the VIEW0 menu as described in the previous section.
2. Press [MODE] .

3. Press [2] to select the Stats option. You see the following screen.

```
VW_STA    Calls: 1024 Inc:  45 Abnd:  123

          MWIs: 988 Inc: 12  Q: 234-06%
```

The screen updates continuously, showing the total number of calls processed and the number of bad packets received from the switch. The screen also shows the total number of message waiting commands processed, the number of bad MWI packets received from the Intuity system, and the total number of MWI commands residing in the SID's queue. Use the Statistics mode to monitor activity on your integrated system.

Using Metrics Mode

Use the following instructions to use the Metrics monitor mode.

1. Access the View menu as described in the previous section.
2. Press [MODE] .
3. Press [3] to select the Metrics option. You see the following screen.

```
VM_MET    Calls ATQ:  5      Min:  2  Max: 8

          Calls/Hr:  980     MWIs/Hr:   670
```

This display updates occasionally, showing performance measurements for both the SID's call processing and message waiting activities. The top line shows a running average time in queue for each call appearing at the SID and the minimum and maximum time in queue for all calls measured. The measurements are shown in seconds. On the bottom line, you can observe the current running average for calls processed per hour and message waiting commands processed per hour. Use the Metric mode to monitor the performance characteristics of your integrated system.

Using Diagnostic Monitors

You can use two types of diagnostic views, emulation and monitor, on the SID. You must have access to security level 1 to use the views. The first view, emulation, is the telephone emulator described in "Appendix A, Troubleshooting and Error Logs", in the "Test the SID ROLMphone Set Emulation" section. When the integration is stopped, the EM0 screen operates as an active emulator that allows you to interact and use the SID as a telephone.

You access the second type of diagnostic view, monitor, when the integration is operating. The MN0 screen, shown in the example below, acts as a passive monitor and allows you to view the activity of the ROLMphone display and the MWI lamp updates. Use the following instructions to use the diagnostic monitor view.

1. Press [FUNC] to access the ROLM Main Menu.
2. Press [6] to select the Diagnostic option. You see the following screen.

```
DIAGS        1-Emulator        2-Centrex
```

3. Press [1] to select the Emulator option. You see the following screen.

```
MN FFFWOOOO  oooooooooooooooooooooooo  OOS

201   SMITH, JOHN      BFWD 202 DOE, JANE
```

The name of the screen, MN, stands for "monitor". If you saw the name EM on the screen, the integration would not be operating. Similar to the EM screen, the top line of the screen shows you the state of the call appearance lamps, feature buttons, and the message waiting lamps. The bottom line of the screen "echos" or mirrors the display shown on the ROLMphone 400. Use Table B-1 to understand the display as you use the diagnostic monitor.

Table B-1. Lamp Status for Appearance Fields and Feature Buttons

Character	Lamp Status: Appearance Field and Feature Buttons
B or b	busy
E or e	flicker pause — error
F or f	flashing — ringing
F or f	flicker steady — hold or transfer
O or o	dark — no activity
S or s	steady — selected or off-hook

Clearing Statistical Information

The SID accumulates data that supports the Statistics and Metrics views. You may wish to purge the data to begin taking new measurements, especially when you add subscribers to the system, analog voice mail ports, or change your usage habits. To clear the data, use the following instructions.

1. Log into security level 1.

   For instructions on logging in to the security level, refer to "Chapter 9, Switch Integration Device Administration", in this document.

2. Press [MODE] at the View action screen.

3. Press [5] to select Clear and and remove the old statistics. After you press the key, you see the following message on the screen.

```
Clearing Statistics...
```

The SID clears all statistical information. After a few seconds, the display clears and the SID returns to the View menu.

Switch Administration for INTUITY Lodging

C

Hunt Group Administration

A hunt group is a set of extension numbers assigned to another single number. When a call goes to this number a programmed search of the hunt group is made to deliver the call to a member of the set that is not busy. For example, when two calls are made to the hunt-group extension, they are reconnected to two free extensions from the set. Hunt groups are a commonly-used switch feature. Your switch probably has hunt groups already assigned.

You will need to configure a hunt group for calls to the intuity system. Calls to the number serving the hunt group will then be redirected by the hunt group to the several Intuity system voice ports.

1. Administer your switch to create a hunt group for your Intuity system.
2. Have the voice ports on the Intuity MAP wired to the switch ports that terminate the hunted extensions. Wire them as described in Intuity Installation etc.

Message Retrieval Administration

The message retrieval number is a telephone number that subscribers call to retrieve voice mail messages. Like other calls to Intuity, message retrieval calls ultimately go to the Intuity hunt group.

Message Retrieval in Lodging Systems without AUDIX

1. Give the Intuity hunt group number to subscribers to your system to use for message retrieval.

Message Retrieval in Systems Shared with AUDIX

There must be two message retrieval numbers in a shared system, one to retrieve from the AUDIX application, and one to retrieve from the Lodging application.

Retrieval from the AUDIX Application

1. Give the Intuity hunt group number to your system's subscribers to use for message retrieval from the AUDIX application.

Retrieval from the Lodging Application

1. Administer on your switch an extension number that is not associated with a switch port. (These are often called phantom or dummy numbers.) This number becomes the Lodging message-retrieval number for your system.
2. Configure this number so that the Intuity hunt group is in its coverage path for all calls.
3. Give the Lodging message-retrieval number to subscribers to your system to use for message retrieval from the Lodging application.

Alternate Message Retrieval Method

Besides the message retrieval options offered above, you can allow guests to login from any extension to any mailbox for which they have a password. A guest calls a particular number to access this service then enters an extension number and a password to get messages in the mailbox of the extension of interest.

To provide such a service:

1. Administer on your switch an extension number that is not associated with a switch port. (These are often called phantom or dummy numbers.) This number is to be used to retrieve messages from a remote phone.
2. Configure this number so that the Intuity hunt group is in its coverage path for all calls.
3. If your switch has a password capability, assign a password to the new extension.
4. Assign to the new extension, the service: "ldg_ni_vm."
    a. Log into the Intuity system as sa or craft.

b. Begin at the Intuity Administration menu and pick the following sequence.

```
>Voice System Administration
    Voice Equipment
```

c. From the Voice Equipment screen, press (F8) then (F3).

d. Select Services to Called Numbers from the Assign menu.

e. Press (F2) and select ldg_ni_vm.

f. Enter the called number that was administered on the switch for this purpose.

g. Press (F3). A command-output screen appears confirming your choice.

h. Press (F6) three times to exit to the Voice Equipment screen.

5. If you want the phantom extension to be available from outside your system, have the extension assigned to a Direct-Inward-Dialing number.

6. Give the Lodging message-retrieval number to subscribers to your system to use for message retrieval from the Lodging application.

Voice Mail Administration

Voice mail is enabled any time the switch sends a guest's call to coverage. The following procedure, however, makes available a separate number that can be used at any time to send voice mail to a guest.

To provide such a service:

1. Administer on your switch an extension number that is not associated with a switch port. (These are often called phantom or dummy numbers.) This number is to be used to send voice messages to your subscribers.

2. Configure this number so that the Intuity hunt group is in its coverage path for all calls.

3. Assign to the new extension, service: "ldg_ni_ca" as follows:

   a. Login to the Intuity system as sa or craft.

   b. Begin at the Intuity Administration menu and pick the following sequence.

   c. From the Voice Equipment screen, press (F8) then (F3).

   d. Select Services to Called Numbers from the Assign menu.

   e. Press (F2) and select ldg_ni_ca

   f. Enter the called number of your choice.

g. Press (F3). A command-output screen appears confirming your choice.

h. Press (F6) three times to exit to the Voice Equipment screen.

4. If you want the phantom extension to be available from outside your system, have the extension assigned to a Direct-Inward-Dialing number.

5. Give the Lodging voice-mail number to subscribers to your system so they can send voice mail among themselves.

Call Coverage Path

A coverage path directs the switch to transfer unanswerable calls to a hunt group, to a service, or to another extension. These may be calls that are unanswered or calls to a busy extension. When a call goes to coverage, the switch forwards the called number to the Intuity system. The Intuity system discovers that the called number is administered as a particular subscriber's extension and treats the call as one to be answered and recorded. Depending on how the extension is listed, the call may be answered by either the AUDIX or Lodging application.

1. Administer your switch to assign call coverage to the Intuity hunt group number for each guest's extension.

Do-Not-Disturb

Look for features on your switch that adapt themselves especially well to lodging situations. One example is the Do-Not-Disturb feature on some switches. This feature makes it possible to request that a particular extension not receive calls until a specified time. At the specified time, the switch automatically deactivates the feature and allows calls to terminate normally at the extension.

If this extension is covered to the Intuity hunt group, then calls received while Do-not-Disturb is active will be recorded for later perusal.

The AT&T Definity G3 switches offer an example of a Do not Disturb feature. In this case, switch administration for the feature is covered in the implementation book for your switch.

Cut-to-Service

A cut-to-service of the Intuity Lodging application amounts to changing the coverage path for guest extensions to the Intuity hunt group. The associated system must have been completely installed before you cut the Intuity Lodging application into service. Furthermore, all Intuity system initial administration, associated switch administration, and acceptance tests must have been completed.

Some switching systems make it possible to define these extensions to be a set and to change the coverage path for all guests at a single stroke. Most switching systems make it possible to change the coverage path for guest extensions one extension at a time. You may choose to use either method.

Gradual Cut-to-Service

Using this cut-to-service strategy, you enter guests into the Intuity Lodging system as they check in. Only new guests, not current guests, receive Intuity Lodging services.

The advantages of this method include:

- Attendants can learn to cope with the new system without having to answer the questions of large numbers of guests
- No guest has to learn both the old system and the new one. Current guests use the old system, new guests use the Intuity Lodging system.
- You can assign custom passwords and language options to each guest as the guest is checked in.

Gradually cut to service as follows:

1. Administer your switch to send call coverage for the guest's telephone to the Intuity hunt group.
2. Check in each new guest as described in *Intuity Lodging Administration and Feature Operations*.

One-Step Cut-to-Service

On switches where a coverage path is separately defined and then applied to a class of stations, it is possible to subject all guest stations to Intuity Lodging at once. Using this cut-to-service strategy, you change all of the guest stations to Intuity Lodging at the same time.

The advantages of this method include:

- Since Intuity Lodging is brought up in one step, attendants must only cope with one call-answering system at a time.
- The cut-to-service job is over at once. Guests needn't wonder why some guests have one service and some another.
- You can assign reasonable coverage options to all guests at once and modify administration for the few that have unusual requirements.

Cut-to-service as follows:

1. Administer, by means of Intuity Lodging administration, the options your guests will enjoy.
2. Make sure your guests and attendants know when the change will take place and that they have some idea of how their new service will work.
3. On your switch, determine the coverage path that applies to your guests' stations.
4. Access your switch administration method for changing a coverage path. Set the new coverage path for your guests' stations to the Intuity hunt group.

Abbreviations

A

AC
alternating current

ACD
automatic call distribution

ADAP
administration and data acquisition package

ADU
asynchronous data unit

ALT
assembly load and test

AMIS
Audio Messaging Interchange Specification

API
application programming interface

AUDIX
Audio Information Exchange

AWG
American wire gauge

B

BIOS
basic input/output system

bit
binary digit

bps
bits per second

BRI
basic rate interface

BSC
binary synchronous communications

BTU
British thermal unit

C

CAS
call accounting system

CCA
call classification analysis

CDH
call data handler process

CELP
code excited linear prediction

CICS
customer information control system

CMS
call management system

CO
central office

COIN
central office implemented network

COM1
serial communications port 1

COM2
serial communications port 2

COR
class of restriction

COS
class of service

CPU
central processing unit

CSI
called subscriber information

CTS
clear to send

D

DAC
dial access code

DBP
database processor

DC
direct current

DCE
data communications equipment

DCIU
data communications interface unit

DCP
digital communications protocol

DCS
distributed communications system

DID
direct inward dialing

DIP
data interface process

DMA
direct memory access

DNIS
dialed number identification service

DSP
digital signal processor

DSR
data set ready

DSU
data service unit

DTE
data terminal equipment

DTMF
dual tone multifrequency

DTR
data terminal ready

E

EIA
Electronic Industries Association

ESD
electrostatic discharge

ESS
electronic switching system

F

F key
function key

FIFO
first-in first-out

FOOS
facility out of service

G

GBCS
Global Business Communications Systems

GOS
grade of service

H

Hz
hertz

I

I/O
input/output

IDI
isolating data interface

IMAPI
Intuity messaging application programming interface

INADS
initialization and administration system

IRQ
interrupt request

ISDN
integrated services digital network

IVC6
integrated voice CELP card (6 channels)

IVR
integrated voice response

K

Kbps
kilobits per second

Kbyte
kilobyte (1024 bytes)

kHz
kilohertz

L

LAN
local area network

LCD
liquid crystal display

LED
light-emitting diode

LIFO
last-in first-out

LWC
leave word calling

M

MANOOS
manually out of service

Mbyte
megabyte (one million bytes)

MHz
megahertz

modem
modulator/demodulator

MPDM
modular processor data module

ms
millisecond

MT
maintenance (Intuity software component)

MTBF
mean time between failures

MWI
message-waiting indicator

MWL
message-waiting lamp

N

NW
Intuity AUDIX Digital Networking

O

OA&M
operations, administration, and maintenance

OS
operating system

OSI
open systems interconnection

P

PBX
private branch exchange

PC
power converter or personal computer

PDM
processor data module

PEC
price element code

PIB
processor interface board

PMS
property management system

POST
power-on self test

R

RAM
random-access memory

REN
ringer equivalence number

ROM
read-only memory

RTS
request to send

RTU
right to use

S

SCA
switch communications adapter

SCSI
small computer systems interface

SID
switch integration device

SIMM
single in-line memory module

SMSI
simplified message service interface

SW
switch integration (Intuity software component)

T

TCP/IP
Transmission Control Protocol/Internet Program

TDD
telecommunications device for the deaf

TDM
time division multiplex

T/R
tip/ring

TRIP
tip/ring input process

TSC
AT&T's Technical Services Center

U

UCD
uniform call distribution

UPS
uninterruptible power supply

V

VM
Intuity AUDIX Voice Messaging

VP
voice platform (Intuity software component)

VROP
voice response output process

Glossary

A

accessed message
A message that was received and scanned (either the entire message or just the header).

ACD
See *automatic call distribution*.

5ESS Switch
An AT&T central office switch that can be integrated with the AT&T Intuity system.

activity menu
The list of options spoken to subscribers when they first access a messaging system. Selecting an activity is the starting point for all user operations.

ADAP
See *administration and data acquisition package*.

address
Intuity AUDIX subscriber identification, containing the subscriber's extension and machine, that indicates where the system needs to deliver a message. An address may include several subscribers or mailing lists. Name or number addressing can be selected with the *A command.

adjunct
A separate system closely integrated with a switch, such as an AT&T Intuity system or a call management system (CMS).

administration
The process of setting up a system (such as a switch or a messaging system) to function as desired. Options and defaults are normally set up (translated) by the system administrator or service personnel.

administration and data acquisition package (ADAP)
A software package that allows the system administrator to transfer system subscriber, maintenance, or traffic data from an Intuity AUDIX system to a personal computer (PC).

ADU
See *asynchronous data unit*.

alarm log
A list of alarms that represent all of the active or resolved problems on an AT&T Intuity system. The alarm log is stored in a software file on disk and can be accessed either locally or remotely on a terminal connected to the system.

alarms
Hardware, software, or environmental problems that may affect system operation. Alarms are classified as major, minor, or warning.

alphanumeric
Alphabetic, numeric, or punctuation symbols.

ALT
See *assemble load and test.*

AMIS
See *Audio Messaging Interchange Specification*.

AMIS Prefix
A number added to the destination number to indicate that the destination number is an AMIS analog networking number.

ampere (amp)
The unit of measurement of electric current. One volt of potential across one ohm causes a current flow of one amp.

analog networking
A method of transferring a message from one messaging system to another whereby the message is played back (voiced) during the transmission from one system to another.

analog signal
A communications path that, in teleprocessing usage, usually refers to a voice-grade telephone line.

announcement fragment
A numbered piece of spoken information that makes up a system message or prompt.

antistatic
A material that is treated to prevent the build-up of static electricity.

API
See *application programming interface.*

application programming interface
A set of formalized software calls and routines that can be referenced by an application program to access underlying network services.

assemble load and test
The factory process that preloads software, installs hardware, and tests the system prior to shipping.

asynchronous communication
A method of data transmission in which bits or characters are sent at irregular intervals and bits or characters are spaced by start and stop bits and not by time. See also *synchronous communication*.

asynchronous data unit (ADU)
An electronic communications device that can extend data transmission over asynchronous lines more than 50 feet in length. Recommended ADUs include Z3A1 or Z3A4.

asynchronous transmission
A form of serial communications where each transmitted character is bracketed with a start bit and one or two stop bits. The AT&T Intuity system provides asynchronous RS-232 capabilities for Intuity AUDIX Digital Networking, if required.

attendant console
A special purpose phone with numerous lines and features located at the front desk. The front desk attendant uses the phone to answer and transfer calls.

Audio Messaging Interchange Specification (AMIS)
An analog networking protocol that allows subscribers to exchange messages with any messaging system that also has AMIS Analog Networking capabilities. Messages can be exchanged with subscribers on AT&T Intuity systems as well as with users on remote messaging systems made by vendors other than AT&T.

Audio Information Exchange (AUDIX)
A complete messaging system accessed and operated by touch-tone telephones and integrated with a switch.

audit
A software program that resolves filesystem incompatibilities and updates restored filesystems to a workable level of service. Audits are done automatically on a periodic basis, or can be performed on demand.

AUDIX
See *Audio Information Exchange*.

autodelete
An Intuity AUDIX feature that allows subscribers to indicate that faxes are automatically deleted from their mailbox after being printed.

automated attendant
A feature that allows a user of an Intuity system to set up a main extension number with a menu of options that routes callers to an appropriate department at the touch of a button.

automatic call distribution (ACD)
The System 85, Generic 2, or Generic 3 call-distribution group of analog ports that connects Intuity subscribers and users to the system. See also *call-distribution group*.

automatic message scan
An Intuity AUDIX feature that allows subscribers to scan all message headers and messages at the touch of two buttons. With Intuity FAX Messaging, this feature allows all new faxes to be bundled and transmitted over a single fax call delivery call. Also called *autoscan*.

autoprint
An Intuity AUDIX feature that allows subscribers to indicate that faxes are automatically sent to a specified print destination.

autoscan
See *automatic message scan*.

AWG
See *American wire gauge.*

American wire gauge
A standard measuring gauge for non-ferrous conductors.

B

background testing
Testing that runs continuously when the system is not busy doing other tasks.

backup
A duplicate copy of files and directories saved on a removable media such as floppy diskette or tape. The backup filesystem may be copied back (restored) if the active version is damaged (corrupted) or lost.

basic input/output system (BIOS)
A system that contains the buffers for sending information from a program to the actual hardware device the information should go to.

baud
A unit of measurement that describes the speed of transferred information.

baud rate
Transmission signaling speed.

basic call transfer
A switch hook-flash method used to send the Intuity AUDIX transfer command over analog voice ports.

basic rate access
See *basic rate interface*.

basic rate interface (BRI)
International standard protocol for connecting a station terminal to an integrated systems digital network (ISDN) switch. ISDN BRI supports two 64 Kbps information bearer channels (B1 and B2), and one 16 Kbps call status and control (D) channel (a 2B + D format). Also called b*asic rate access*.

binary digit (bit)
Two-number notation that uses the digits 0 and 1. Low-order bits are on the right (for example, 0001=1, 0010=2, and so forth). Four bits make a nybble; eight bits make a byte.

binary synchronous communications (BSC)
A character-oriented synchronous link protocol.

BIOS
See *basic input/output system*.

bit
See *binary digit*.

body
The part of subscriber voice mail that contains the actual spoken message. For a leave word calling (LWC) message, it is a standard system announcement.

boot
The operation to start a computer system by loading programs from disk to main memory (part of system initialization). Booting is typically accomplished by physically turning on or restarting the system. Also called *reboot*.

boot filesystem
The filesystem from which the system loads its initial programs.

bps (bits per second)
The number of binary units of information (1s or 0s) that can be transmitted per second. Mbps refers to a million bits per second; Kbps refers to a thousand bits per second.

BRI
See *basic rate interface*.

broadcast messaging
An Intuity AUDIX feature that enables the system administrator and other designated users to send a message to all subscribers automatically.

BSC
See *binary synchronous communications*.

buffer
Memory used to compensate for time differences in transmission by temporarily storing data.

bulletin board
An Intuity AUDIX feature that allows a message to be played to callers who dial the extension. Callers cannot leave a message since it is a listen-only service. Also called *information service*.

bundling
Combining several calls and handling them as a single call. See also *automatic message scan*.

bus
An electrical connection/cable allowing two or more wires, lines, or peripherals to be connected together.

busy-out/release
To remove an Intuity device from service (make it appear busy or in use), and later restore it to service (release it). The Intuity switch data link, voice ports, or networking ports may be busied out if they appear faulty or if maintenance tests are run.

byte
A unit of storage in the computer. On many systems, a byte is eight bits (binary digits), the equivalent of one character of text.

C

call accounting system (CAS)
A software device that monitors and records information about a calling system.

call-answer
An Intuity AUDIX or AT&T Intuity Lodging feature that allows the system to answer a call and record a message when the subscriber is unavailable. Callers may be redirected to the system through the call coverage or call forwarding switch features. Intuity AUDIX subscribers may record a personal greeting for these callers.

call-answer language choice
The capability of subscriber mailboxes to accept messages in different languages. For the Intuity AUDIX application, this capability exists when the multilingual feature is turned on.

callback number
In AMIS analog networking, the telephone number transmitted to the recipient machine to be used in returning messages that cannot be delivered.

call coverage
A switch feature that defines a preselected path for calls to follow if the first (or second) coverage points are not answered. The Intuity system may be placed at the end of a coverage path to handle redirected calls through call coverage, send all calls, go to cover, etc.

call delivery
See *message delivery*.

call-distribution group
The set of analog port cards on the switch that connects subscribers and users to the Intuity system by distributing new calls to idle ports. This group (or split) is called automatic call distribution (ACD) on System 85, Generic 2, and Generic 3 and uniform call distribution (UCD) on System 75, Generic 1, and Generic 3. See also *automatic call distribution* and *uniform call distribution*.

call management system (CMS)
An inbound call distribution and management reporting package.

called tone (CED tone)
The distinctive tone generated by a fax endpoint when it answers a call (constant 2100 Hz tone).

called subscriber information (CSI)
The identifier for the answering fax endpoint. This identifier is sent in the T.30 protocol and is generally the telephone number of the fax endpoint.

calling tone (CNG tone)
The distinctive tone generated by a fax endpoint when placing a call (constant 1100 Hz tone on for one-half second, off for three seconds).

call vectoring
A System 85 R2V4, Generic 2, and Generic 3 feature that uses a vector (switch program), allowing a switch administrator to customize the behavior of calls sent to an automatic call distribution (ACD) group.

card cage
An area within the Intuity hardware platform that contains and secures all of the standard and optional circuit cards used in the system.

cartridge tape drive
A high-capacity data storage/retrieval device that can be used to transfer large amounts of information onto high-density magnetic cartridge tape based on a predetermined format. This tape is to be removed from the system and stored as a backup.

CAS
See *call accouting system*.

CED tone
See *called tone*.

CELP
See *code excited linear prediction*.

central office (CO)
An office or location in which large telecommunication machines such as telephone switches and network access facilities are maintained. In a CO, private customer lines are terminated and connected to the public network through common carriers.

central processing unit (CPU)
The component of the computer that manipulates data and processes instructions coming from software.

channel
A telecommunications transmission path for voice and/or data.

channel capacity
A measure of the maximum bit rate through a channel.

CICS
See *customer information control system*.

class of service (COS)
The standard set of Intuity AUDIX features given to subscribers when they are first administered (set up with a voice mailbox).

clear to send (CTS)
Located on Pin 5 of the 25-conductor RS-232 interface, CTS is used in the transfer of data between the computer and a serial device.

client
A computer that sends, receives and uses data, but that also shares a larger resource whose function is to do most data storage and processing. For Intuity Message Manager, the subscriber's PC running Message Manager is the client. See also *server*.

CMS
See *call management system*.

CNG tone
See *calling tone*.

CO
See *central office*.

COS
See *class of service*.

code excited linear prediction
An analog-to-digital voice coding scheme.

collocated
An Intuity system installed in the same physical location as the host switch. See also *local installation*.

collocated adjunct
Two or more adjuncts that are serving the same switch (i.e., each has voice port connections to the switch) or that are serving different switches but can be networked through a direct RS-232 connection due to their proximity.

comcode
AT&T's numbering system for telecommunications equipment. Each comcode is a nine digit number that represents a specific piece of hardware, software, or documentation.

command
An instruction or request given by the user to the software to perform a particular function. An entire command consists of the command name and options. Also, one- or two-key touch tones that control a mailbox activity or function.

compound message
A message that combines both a message and a fax message into one unit, which is then handled by Intuity AUDIX as a single message.

configuration
The particular combination of hardware and software components selected for a system, including external connections, internal options, and peripheral equipment.

controller circuit card
A circuit card used on a computer system that controls its basic functionality and makes the system operational. These cards are used to control magnetic peripherals, video monitors, and basic system communications.

COS
See *class of service*.

coverage path
The sequence of alternate destinations to which a call is automatically sent when the call is not answered by a subscriber. This sequence is set up on the switch, normally with the AT&T Intuity system as the last or only destination.

CPU
See *central processing unit*.

cross connect
Distribution system equipment used to terminate and administer communication circuits.

cross connection
The connection of one wire to another, usually by anchoring each wire to a connecting block and then placing a third wire between them so that an electrical connection is made.

CSI
See *called subscriber information*.

CTS
See *clear to send*.

D

DAC
See *dial access code*.

database
A structured set of files, records, or tables. Also, a collection of filesystems and files in disk memory that store the voice and nonvoice (program data) necessary for AT&T Intuity system operation.

data communications equipment (DCE)
Standard type of data interface normally used to connect to data terminal equipment (DTE) devices. DCE devices include the data service unit (DSU), the isolating data interface (IDI), and the modular processor data module (MPDM).

data communications interface unit (DCIU)
A switch device that allows nonvoice (data) communication between an AT&T Intuity system and an AT&T switch. The DCIU is a high-speed synchronous data link that communicates with the common control switch processor over a direct memory access (DMA) channel that reads data directly from FP memory.

data link
A term used to describe the communications link used for data transmission from a source to a destination. For example, a phone line for data transmission.

data service unit (DSU)
A device used to access digital data channels. DATAPHONE II 2500 DSUs are synchronous data communications equipment (DCE) devices used for extended-local AT&T Intuity system connections. The 2600 or 2700 series may also be used; these are more expensive DSU options and support diagnostic testing and the DATAPHONE II Service network system.

data set
AT&T term for a modem. A data set usually includes the telephone. See also *modem*.

data terminal equipment (DTE)
Standard type of data interface normally used for the endpoints in a connection. Normally the AT&T Intuity system, most terminals, and the switch data link are DTE devices.

data terminal ready (DTR)
A control signal sent from the data terminal equipment (DTE) to the data communications equipment (DCE) that indicates the DTE is on and ready to communicate.

DBP
See *data base processor*.

DCE
See *data communications equipment*.

DCIU
See *data communications interface unit*.

DCP
See *digital communications protocol*.

DCS
See *distributed communications system*.

debug
See *troubleshoot*.

dedicated line
A communications path that does not go through a switch. A dedicated (hard-wired) path may be formed with directly connected cables. MPDMs, DSUs, or other devices may also be used to extend the distance that signals can travel directly through the building wiring.

default
A value that is automatically supplied by the system if no other value is specified.

default print number
The subscriber-administered extension to which autoprinted faxes are redirected upon their receipt into the subscriber's mailbox. This default print destination is also provided as a print option when the subscriber is manually retrieving and printing faxes from the mailbox.

delivered message
A message that has been successfully transmitted to a recipient's incoming mailbox.

demand testing
Testing performed on request (usually by service personnel).

diagnostic testing
A program run for testing and determining faults in the system.

dial-ahead/dial-through
The act of interrupting or preceding Intuity AUDIX system announcements by typing (buffering) touch-tone commands in the order the system would normally prompt for them.

dialed number identification service (*DNIS_SVC)
An available channel service assignment on the AT&T Intuity system. Assigning this service to a channel permits the AT&T Intuity system to interpret information from the switch and operate the appropriate application for the incoming telephone call.

DID
See *direct inward dialing*.

digital
Discrete data or signals such as 0 and 1, as opposed to analog continuous signals.

digital communications protocol (DCP)
A 64 Kbps digital data transmission code with a 160 Kbps bipolar bit stream divided into two information (I) channels and one signaling (S) channel.

digital networking
A method of transferring messages between messaging systems in a digital format. See also *Intuity AUDIX Digital Networking*.

digital signal processor
A specialized digital microprocessor that performs calculations on digitized signals that were originally analog and then sends the results on.

DIP
See *data interface process*.

DIP switch
See *dual in-line package switch*.

direct inward dialing
The ability for a caller outside a company to call an internal extension without having to pass through an operator or attendant.

direct memory access (DMA)
A quick method of moving data from a storage device directly to RAM, which speeds processing.

directory
An Intuity AUDIX feature allowing you to hear a subscriber's name and extension after typing **N at the activity menu. Also, a group of related files accessed by a common name in software.

display terminal
A data terminal with a screen and keyboard used for displaying AT&T Intuity screens and performing maintenance or administration activities.

distributed communications system (DCS)
A network of two or more switches that uses logical and physical data links to provide full or partial feature transparency. Voice links are made using tie trunks.

distribution list
See *mailing list*.

DMA
See *direct memory access*.

DNIS
See *dialed number identification service*.

DSP
See *digital signal processor*.

DSU
See *data service unit*.

DTE
See *data terminal equipment*.

DTMF
See *dual tone multifrequency*.

dual in-line package (DIP) switch
A very small switch, usually attached to a printed circuit card, in which there are only two settings: on or off (or 0 or 1). DIP switches are used to configure the card in a semipermanent way.

dual language greetings
The capability of Intuity AUDIX subscribers to create personal greetings in two different languages — one in a primary language and one in a secondary language. This capability exists when the multilingual feature is turned on and the prompts for subscriber mailboxes can be in either of the two languages.

dual tone multifrequency
A way of signaling consisting of a pushbutton or touch tone dial that sends out a sound which consists of two discrete tones picked up and interpreted by telephone switches.

E

electrostatic discharge (ESD)
Discharge of a static charge on a surface or body through a conductive path to ground. An ESD can be damaging to integrated circuits.

enabled/disabled
The state of a hardware device that indicates whether the AT&T Intuity system can use it. Devices must be equipped before they can be enabled (made active). See also *equipped/unequipped*.

endpoint
See *fax endpoint*.

enhanced call transfer
An Intuity AUDIX feature that allows compatible switches to transmit messages digitally over the BX.25 (data) link. This feature is used for quick call transfers and requires a fully integrated digital switch. Callers can only transfer to other extensions in the switch dial plan.

enhanced serial data interface
A software- and hardware-controlled method used to store data on magnetic peripherals.

equipped/unequipped
The state of a networking channel that indicates whether AT&T Intuity software has recognized it. Devices must be equipped before they can be enabled (made active). See also *enabled/disabled*.

error message
A message on the screen indicating that something is wrong and possibly suggesting how to correct it.

errors
Problems detected by the system during operation and recorded in the maintenance log. Errors can produce an alarm if they exceed a threshold.

escape from reply
The ability to quickly return to getting messages for a subscriber who gets stuck trying to respond to a message. To escape, the subscriber simply presses #.

escape to attendant
An Intuity AUDIX feature that allows a subscriber with the call answer feature to have a personal attendant or operator administered to potentially pick up an unanswered call. A system-wide extension could also be used to send callers to a live agent.

ESD
See *electrostatic discharge*.

events
Informational messages about the system's activities. For example, an event is logged when the system is rebooted. Events may or may not be related to errors and alarms.

F

facility out-of-service
The current channel is not receiving a dial tone and is not functioning.

fax endpoint
Any device capable of receiving fax calls. Fax endpoints include fax machines, individual PC fax modems, fax ports on LAN fax servers, and ports on fax-enabled messaging systems.

field
An area on a screen, menu, or report where information can be typed or displayed.

FIFO
See *first-in/first-out*.

file
A collection of data treated as a basic unit of storage.

filename
Alphanumeric characters used to identify a particular file.

file redundancy
See *mirroring*.

file system
A collection of related files (programs or data) stored on disk that are required to initialize an AT&T Intuity system.

first-in/first-out
The first call (or data) to be received is the first call (or data) to be processed.

F key
See *function key*.

FOOS
See *facility out-of-service*.

format
To set up a disk, floppy diskette, or tape with a predetermined arrangement of characters so that the system can interpret meaningful information.

function
Individual steps or procedures within a mailbox activity.

function key (F key)
A key on a computer keyboard that performs a defined function when pressed. The user interface for the AT&T Intuity system defines keys F1 through F8.

G

Generic 1, 2, or 3
AT&T switch system software releases. Generic 1, Generic 3i, and Generic 3s correspond to the new generation of System 75-based software. Generic 2 and Generic 3r correspond to the new release of System 85-based software.

generic tape
A copy of the standard software and stand-alone tape utilities that is shipped with a new AT&T Intuity system.

GOS
See *grade of service*.

grade of service (GOS)
A parameter that describes the delays in accessing a port on the AT&T Intuity system. For example, if the GOS is P05, 95% of the callers would hear the system answer and 5% would hear ringing until a port became available to answer the call.

guaranteed fax
A feature of AT&T Intuity FAX Messaging that temporarily stores faxes sent to a fax machine. In cases where the fax machine is busy or does not answer a call, the call is sent to an Intuity AUDIX mailbox.

guest password
A feature that allows users who are not Intuity AUDIX subscribers to leave messages on the system by dialing a subscriber's extension and entering a system-wide guest password.

H

hard disk drive
A high-capacity data storage/retrieval device that is located inside a computer platform. A hard disk drive stores data on non-removable high-density magnetic media based on a predetermined format for retrieval by the system at a later date.

hardware
The physical components of a computer system. The central processing unit, disks, tape and floppy drives are all hardware.

header
Information that the system creates to identify a message. A message header includes the originator or recipient, type of message, creation time, and delivery time.

help
A command run by pressing [HELP] or [CTRL] [?] on an AT&T Intuity display terminal to show the options available at your current screen position. In the Intuity AUDIX system, press [*] [H] on the telephone keypad to get a list of options. See also *on-line help*.

hertz (Hz)
A measurement of frequency in cycles per second. A hertz is one cycle per second.

host switch
The switch directly connected to the AT&T Intuity system over the data link. Also, the physical link connecting an AT&T Intuity system to a distributed communications system (DCS) network.

hunt group
A group of analog ports on a switch usually administered to search for available ports in a circular pattern.

Hz
See *hertz*.

I

I/O
Input/output.

IDI
See *isolating data interface*.

IMAPI
See *Intuity messaging application programming interface*.

INADS
See *initialization and administration system*.

information service
See *bulletin board*.

initialization
The process of bringing a system to a predetermined operational state. The start-up procedure tests hardware; loads the boot filesystem programs; locates, mounts, and opens other required filesystems; and starts normal service.

initialization and administration system (INADS)
A computer-aided maintenance system used by remote technicians to track alarms.

initialize
To start up the system for the first time.

input
A signal fed into a circuit or channel.

integrated services digital network (ISDN)
A network that provides end-to-end digital connectivity to support a wide range of voice and data services.

integrated voice processing CELP (IVC6) card
A computer circuit card that supports both fax processing and voice processing capabilities. It provides two analog ports to support six analog channels. All telephone calls to and from the AT&T Intuity system are processed through the IVC6 card.

integrated voice response
An application module that allows customers to write their own alternate applications, also known as a script builder.

interface
The device or software that forms the boundary between two devices or parts of a system, allowing them to work together. See also *subscriber interface*.

interrupt request (IRQ)
A device that signals the data bus and the CPU that it needs attention.

Intuity AUDIX Digital Networking
An AT&T Intuity feature that allows customers to link together up to 500 remote AT&T Intuity machines for a total of up to 500,000 remote subscribers. See also *digital networking*.

Intuity Message Manager
A Windows-based software product that allows Intuity AUDIX subscribers to receive, store, and send their voice/FAX messages from a PC.

Intuity messaging application programming interface (IMAPI)
A software function-call interface that allows Intuity AUDIX to interact with AT&T Intuity Message Manager.

I/O address
input/output address.

IRQ
See *interrupt request*.

ISDN
See *integrated services digital network*.

isolating data interface (IDI)
A synchronous, full duplex data device used for cable connections between an AT&T Intuity GPSC-AT/E card and the switch data communications interface unit (DCIU).

IVC6
See *integrated voice processing CELP (IVC6) card.*

IVR
See *integrated voice response*.

J

jumper
Pairs or sets of small prongs on circuit cards and mother boards that allow the user to instruct the computer to select one of its available operation options. When two pins are covered, an electrical circuit is completed.

K

Kbps
kilobits per second; one thousand bits per second.

Kbyte
kilobyte per second; 1024 thousand bytes per second.

L

label
The name assigned to a disk device (either a removable tape cartridge or permanent drive) through software. Cartridge labels may have a generic name (such as 3:3) to show the software release or a descriptive name if for backup copies (such as back01). Disk drive labels usually indicate the disk position (such as disk00 or disk02).

LAN
See *local area network*.

last-in/first-out
The last call (or data) to be received is the first call (or data) to be processed.

LCD
See *liquid crystal display*.

leave word calling (LWC)
A switch feature that allows the calling party to leave a standard (nonvoice) message for the called party using a feature button or dial access code.

LED
See *light emitting diode*.

LIFO
See *last-in/first-out*.

light emitting diode (LED)
A light indicator on the hardware platform that shows the status of operations.

liquid crystal display (LCD)
The 10-character alphanumeric display that shows status of the system, including alarms.

load
To read software from external storage (such as disk) and place a copy in system memory.

local area network (LAN)
A network of PCs that communicate with each other and that normally share the resources of one or more servers. Operation of AT&T Intuity Message Manager requires that the Intuity AUDIX system and the subscribers' PCs are on a LAN.

local AUDIX machine
The AT&T Intuity system where a subscriber's Intuity AUDIX mailbox is located. All subscribers on this home machine are called *local subscribers*.

local installation
A switch, adjunct, or peripheral equipment installed physically near the host switch or system. See also *collocated*.

local network
An Intuity AUDIX Digital Network in which all AT&T Intuity systems are connected to the same switch.

login
A unique code used to gain approved access to the AT&T Intuity system. See also *password*.

login announcement
A feature enabling the system administrator and other designated users to create a mail message that is automatically played to all Intuity AUDIX subscribers every time they login to the system.

LWC
See *leave word calling*.

M

magnetic peripherals
Data storage devices that use magnetic media to store information. Such devices include hard disk drives, floppy disk drives, and cartridge tape drives.

mailbox
A portion of disk memory given to each subscriber for creating and storing outgoing and incoming messages.

mailing list
A group of subscriber addresses assigned a list ID# and public or private status. A mailing list may be used to simplify sending messages to several subscribers.

maintenance
The process of identifying system errors and correcting them, or taking steps to prevent problems from occurring.

major alarm
An alarm detected by AT&T Intuity software that affects at least one fourth of the AT&T Intuity ports in service. Often a major alarm indicates that service is affected.

MANOOS
See *manually out-of-service*.

manually out-of-service
A unit has been intentionally taken out of service.

mean time between failures
The average time a manufacturer estimates before a failure occurs in a component or system.

megabyte
A unit of memory equal to 1,048,576 bytes (1024 x 1024). It is often rounded to one million.

memory
A device which can store logic states such that data can be accessed and retrieved. Memory may be temporary (such as system RAM) or permanent (such as disk).

menu tree
The way in which nested automated attendants are set up.

message categories
Groups of messages in Intuity AUDIX subscribers' mailboxes. Categories include new, unopened, and old for the incoming mailbox and delivered, accessed, undelivered, undeliverable (not deliverable), and file cabinet for the outgoing mailbox.

message delivery
An optional AT&T Intuity feature that permits subscribers to send messages to any touch-tone telephone, as long as the telephone number is in the range of allowable numbers. This feature is an extension of the AMIS analog networking feature and is automatically available when the AMIS feature is activated.

Message Manager
See *Intuity Message Manager*.

message-waiting indicator (MWI)
An indicator that alerts subscribers that they have received new mail messages. An MWI can be LED, neon, or audio (stutter dial tone).

message waiting lamp (MWL)
An lamp that alerts subscribers that they have received new mail messages. An MWL can be LED, neon, or audio (stutter dial tone). Also known as a message-waiting indicator.

migration
An installation that moves data from another messaging system to the AT&T Intuity system.

minor alarm
An alarm detected by maintenance software that affects less than one fourth of the AT&T Intuity ports in service, but has exceeded error thresholds or may impact service.

mirroring
An AT&T Intuity system feature that allows data from crucial filesystems to be continuously copied to backup (mirror) filesystems while the system is running. If the system has some problem where an original filesystem cannot be used, the backup filesystem is placed in service automatically.

mode code
A string of touch-tones from a MERLIN LEGEND switch. A mode code may send the AT&T Intuity AUDIX system information such as call type, calling party, called party, and on/off signals for message waiting lamps.

modem
A device that converts data from a form that is compatible with data processing equipment (digital) to a form compatible with transmission facilities (analog), and vice-vera.

modular
A term that describes equipment made of plug-in units that can be added together to make the system larger, improve its capabilities, or expand its size.

modular processor data module (MPDM)
A data device that converts RS-232C or RS-449 protocol signals to digital communications protocol (DCP) used by System 75/85, Generic1, and Generic 3 switches. MPDMs may connect AT&T Intuity to a switch DCIU or SCI link or connect terminals to a switch port card.

MPDM
See *modular processor data module*.

MTBF
See *mean time between failures*.

multi-application platform (MAP)
The computer hardware platform used by the AT&T Intuity system. Currently, a MAP/5, MAP/40, and MAP/100 are available.

multilingual feature
A feature that allows simultaneously-active language announcement sets on the system. With this feature, mailboxes can be administered so that subscribers can hear prompts in the language of their choice.

MWI
See *message-waiting indicator*.

MWL
See *message waiting lamp*.

N

networking
See *Intuity AUDIX Digital Networking*.

networking prefix
A set of digits that identifies an AT&T Intuity machine.

night attendant
The automated attendant created on a MERLIN LEGEND switch that automatically becomes active during off-hours. The night attendant substitutes for one or more daytime attendants.

not deliverable message
Al message that could not be delivered after a specified number of attempts. This usually means that the subscriber's mailbox is full.

O

on-line help
An AT&T Intuity feature that provides information about AT&T Intuity user interface screens by pressing a predetermined key. See also *help*.

open systems interconnection (OSI)
Internationally accepted framework of standards for communication between two systems made by different vendors.

operating system (OS)
The set of programs that runs the hardware and interprets software commands.

option
A choice selected from a menu, or an argument used in a command line to modify program output by modifying the execution of a command. When you do not specify any options, the command will execute according to its default options.

OS
See *operating system*.

OSI
See *open systems interconnection*.

outcalling
An AT&T Intuity feature that allows the system to dial subscribers' numbers to inform them they have new messages.

outgoing mailbox
A storage area for subscribers to keep copies of messages for future reference or action.

P

parallel transmission
The transmission of several bits of data at the same time over different wires. Parallel transmission of data is usually faster than serial transmission.

password
A code assigned to every AT&T Intuity terminal user and Intuity AUDIX subscriber for security reasons. After dialing the system, subscribers must dial their personal password correctly to log on. Passwords are also assigned to local and remote networked machines to identify the machines or the network. See also *login.*

password aging
An Intuity AUDIX feature that allows administrators to set a length of time after which a subscriber's password expires. The subscriber is then forced to change the password.

PBX
See *private branch exchange*.

PC
See *power converter*.

PDM (processor data module)
See *modular processor data module (MPDM)*.

PEC
See *price element code*.

peripheral device
Equipment external to the AT&T Intuity cabinet, such as printers or terminals, necessary for full operation and maintenance of the AT&T Intuity system. Also called *peripherals*.

personal directory
An Intuity AUDIX feature allowing each subscriber to create a private list of customized names.

personal fax extension
See *secondary extension*.

pinouts
The signal description per pin number for a particular connector.

PMS
See *property management system*.

port
A connection or link between two devices, allowing information to travel to a desired location. For example, a switch port connects to an AT&T Intuity voice port to allow a subscriber to leave a message.

POST
See power-on self test.

priority call answer
An Intuity AUDIX feature that allows callers to designate a call answer message as a priority message. To make a message priority, the caller presses 2 after recording the message.

priority messaging
An Intuity AUDIX feature that allows some subscribers to send messages that are specially marked and preferentially presented to recipients. See also *priority outcalling*.

priority outcalling
Works with the priority messaging feature by allowing the message recipient to elect to be notified by outcalling only when a priority message has been received. See also *priority messaging*.

private branch exchange (PBX)
An analog, digital, or electronic system where data and voice transmissions are not confined to fixed communications paths, but are routed among available ports or channels. See also *switch*.

private mailing list
A list of addresses that only the owning subscriber can access.

private messaging
A feature of Intuity AUDIX that allows a subscriber to send a message that cannot be forwarded by the recipient.

processor data module (PDM)
See *modular processor data module (MPDM)*.

processor interface (PI)
A System 75, Generic 1, Generic 3i, Generic 3s, and Generic 3vs switch data link. Also called *processor interface board (PIB)*.

programmed function key
See *function key*.

property management system
Term used in hospitality industry referring to the database used by hotels for guest records and billing information.

protocol
A set of conventions or rules governing the format and timing of message exchanges (signals) to control data movement and the detection and possible correction of errors.

public mailing list
A list of addresses that any Intuity AUDIX subscriber can use if that subscriber knows the owner's list ID# and extension number. Only the owner can modify a public mailing list.

pulse-to-touchtone converter
A device connected to the switch that converts signals from a rotary phone to touch tones. This device allows callers to use rotary phones to access options in a subscriber's mailbox or to access options in an automated attendant.

R

RAM
See *random access memory*.

random access memory (RAM)
The primary memory in a computer that can be overwritten with new information.

read-only memory
A memory device which is programmed at the factory and whose contents thereafter cannot be altered.

reboot
See *boot*.

remote access
Sending and receiving data to and from a computer or controlling a computer with terminals or PCs connected through communications links.

remote installation
A system, site, or piece of peripheral equipment that is installed in a different location from the host switch or system.

remote network
A network in which the systems are integrated with more than one switch.

remote service center
An AT&T or AT&T-certified organization that provides remote support to AT&T Intuity customers. Depending upon the terms of the maintenance contract, your remote service center may be notified of all major and minor alarms and have the ability to remotely log into your system and remedy problems.

remote subscribers
Intuity AUDIX subscribers whose mailboxes reside on a remote Intuity AUDIX Digital Networking machine.

remote terminal
A terminal connected to a computer over a phone line.

REN
See *ringer equivalence number*.

reply loop escape
An Intuity AUDIX feature that allows a subscriber the option of continuing to respond to a message after trying to reply to a nonsubscriber message.

reply to sender
An Intuity AUDIX feature that allows subscribers to immediately place a call to the originator of an incoming message if that person is in the switch's dial plan.

request to send (RTS)
One of the control signals on a RS-232 connector that places the modem in the originate mode so that it can begin to send.

restart
An AT&T Intuity feature that allows Intuity AUDIX subscribers who have reached the system through the call answer feature to access their own mailboxes by typing the *R (Restart) command. This feature is especially useful for long-distance calls or for users who wish to access the AT&T Intuity system when all the ports are busy. Also, the reinitialization of certain software. For example, restarting the messaging system.

restore
The process of recovering lost or damaged files by retrieving them from available backup tapes, floppy diskette, or another disk device.

retention time
The amount of time messages are saved on disk before being automatically deleted from a subscriber's mailbox.

ringer equivalence number (REN)
A number required in the United States for registering your telephone equipment with the phone company.

ROM
See *read-only memory*.

RS-232
A set of standards developed by the Electrical Industries Association (EIA) that specifies various electrical and mechanical characteristics for interfaces between computers, terminals, and modems.

RTS
See *request to send*.

S

sales representative
An AT&T or AT&T-certified person who assists you in the purchasing, planning, and implementation of AT&T equipment and solutions.

SCA
See *switch communications adapter*.

scan
To automatically play mail messages, headers, or both.

scheduled delivery time
A time and/or date that an Intuity AUDIX subscriber optionally assigns to a message that tells the system when to deliver it. If a delivery time is omitted, the system sends the message immediately.

SCSI
See *small computer system interface*.

secondary extension
A second, fax-dedicated extension that directs incoming faxes directly into a subscriber's mailbox without ringing the telephone. The secondary extension shares the same mailbox as the voice extension, but acts like a fax machine. Also called *personal fax extension*.

serial transmission
The transmission of one bit at a time over a single wire.

server
A computer that processes and stores data that is used by other smaller computers. For AT&T Intuity Message Manager, Intuity AUDIX is the server. See also *client*.

shielded cables
Cables that are protected from interference with metallic braid or foil.

SID
See *switch integration device*.

SIMMs
See *single in-line memory modules*.

simplified message service interface (SMSI)
Type of data link connection to an integrated 1A ESS switch or 5ESS switch in the AT&T Intuity system.

single in-line memory modules (SIMMs)
A method of containing random access memory (RAM) chips on narrow circuit card strips that attach directly to sockets on the CPU circuit card. Multiple SIMMs are sometimes installed on a single CPU circuit card.

small computer systems interface (SCSI)
An interface standard defining the physical, logical, and electrical connections to computer system peripherals such as tape and disk drives.

SMSI
See *simplified message service interface*.

split
Group (or queue) of analog ports on the switch. See also *call-distribution group*.

subscriber
An AT&T Intuity user who has been assigned the ability to access the Intuity AUDIX Voice Messaging system.

subscriber interface
The devices that subscribers use to access their mailboxes, manage mailing lists, administer personal greeting, and use other messaging capabilities. Subscriber interfaces include a touch-tone telephone keypad and a PC using AT&T Intuity Message Manager.

surge
A sudden voltage rise and fall in an electrical circuit.

surge protector
A device that plugs into the phone system and the commercial AC power outlet. It is designed to protect the phone system from high voltage surges that could be damaging to the phone system.

SW
See *switch integration*.

switch
An automatic telephone exchange that allows the transmission of calls to and from the public telephone network. See also *private branch exchange (PBX)*.

switched access
A connection made from one endpoint to another through switch port cards. This allows the endpoint (such as a terminal) to be used for several applications.

switch hook
The device at the top of most telephones which is depressed when the handset is resting in the cradle (on hook). This device is raised when the handset is picked up (the phone is off hook).

switch hook flash
A signaling technique in which the signal is originated by momentarily depressing the switch hook.

switch integration
Sharing of information between a messaging system and a switch in order to provide a seamless interface to callers and subscribers.

switch integration device
Operates as a digital telephone set emulator.

switch network
Two or more interconnected switching systems.

synchronous communication
A method of data transmission in which bits or characters are sent at regular time intervals, rather than being spaced by start and stop bits. See also *asynchronous communication*.

synchronous transmission
A type of data transmission where the data characters and bits are exchanged at a fixed rate with the transmitter and receiver synchronized. This allows greater efficiency and supports more powerful protocols.

system configuration
See *configuration*.

T

T.30
The standard for Group III fax machines that covers the protocol used to manage a fax session and negotiate the capabilities supported by each fax endpoint.

tape cartridge
One or more spare removable cartridges required to back up system information.

tape drive
The physical unit that holds, reads, and writes magnetic tape.

TCP/IP
See *transmission control protocol/internet program*.

TDD
See *telecommunications device for the deaf*.

TDM
See *time division multiplex*.

telecommunications device for the deaf (TDD)
A device with a keyboard and display unit that connects to or substitutes for a phone. The TDD allows a deaf or hearing-impaired person to communicate over the phone lines with other people who have TDDs. It also allows a deaf person to communicate with the Intuity AUDIX system.

terminal
See *display terminal*.

terminal type
A number indicating the type of terminal being used to log on to the AT&T Intuity system. Terminal type is the last required entry before gaining access to the AT&T Intuity display screens.

terminating resistor
A grounding resistor placed at the end of bus, line, or cable to prevent signals from being reflected or echoed.

time division multiplex
A device which derives multiple channels on a single transmission facility by connecting bit streams one at a time at regular intervals.

tip/ring
A term used to denote the analog telecommunications interface.

tone generator
A device acoustically coupled to a rotary phone, used to produce touch-tone sounds when subscribers cannot use a regular touch-tone generating voice terminal.

traffic
The flow of attempts, calls, and messages across a telecommunications network.

translations
Software assignments that tell a system what to expect on a certain voice port or the data link, or how to handle incoming data. They customize the AT&T Intuity system and switch features for users.

transmission control protocol/internet program (TCP/IP)
A set of protocols developed by the Department of Defense to link dissimilar computers across many kinds of networks. It is the protocol commonly used over Ethernet, as well as x.25, networks. Although committed to an eventual migration to an Open Systems Interconnection (OSI) architecture. TCP/IP currently divides networking functionality into only four layers: network interface, Internet, transport, and application.

T/R
See *tip/ring*.

troubleshoot
The process of locating and correcting errors in computer programs. Also called *debug*.

U

UCD
See *uniform call distribution*.

Undelete
An Intuity AUDIX feature that allows subscribers to restore the last message deleted. The subscriber presses * U to restore a deleted message.

undelivered message
A message that has not yet been sent to an Intuity AUDIX subscriber's incoming mailbox. The message resides in the sender's outgoing message and may be modified or redirected by the sender.

Unequipped
See *equipped/unequipped*.

unfinished message
A message that was recorded but not approved or addressed, usually the result of an interrupted Intuity AUDIX session. Also called *working message*.

uniform call distribution (UCD)
The type of call-distribution group (or hunt group) of analog port cards on some switches that connects subscribers and users to the Intuity AUDIX system. System 75, Generic 1, Generic 3, and some central office switches use UCD groups. See also *call-distribution group*.

uninterruptable power supply
An auxiliary power unit for a telephone system that provides continuous power in cases where commercial power is lost.

UNIX operating system
A multi-user, multi-tasking computer operating system.

upgrade
An installation that moves an AT&T Intuity system to a newer release.

untouched message
An Intuity AUDIX feature that allows a subscriber to keep a message in its current category by using the **H (Hold) command. If the message is in the new category, message-waiting indication remains active (for example, the message-waiting lamp will remain lit).

UPS
See *uninterruptable power supply*.

U. S. 123
An alternate announcement set in U. S. English whose prompts use numbers, not letters, to identify phone keypad presses. For example, a prompt might say, “press star three,” instead of, “press star D.”

user population
A combination of light, medium, and heavy users on which AT&T Intuity configuration guidelines are based.

V

vector
A customized program in the switch for processing incoming calls.

voice link
The AT&T Intuity analog connection(s) to a call-distribution group (or hunt group) of analog ports on the switch.

voice mail
See *voice message*.

voice mailbox
See *mailbox*.

voice message
Digitized information stored by the AT&T Intuity system on disk memory. Also called *voice mail*.

voice port
The IVC6 port that provides the interface between the AT&T Intuity system and the analog ports on the switch.

voice terminal
A telephone used for spoken communications with the AT&T Intuity system. A touch-tone telephone with a message-waiting indicator is recommended for all Intuity AUDIX subscribers.

voicing
Either speaking a message into the AT&T Intuity system during recording, or having the system playback a message or prompt to a subscriber.

volt

The unit of measurement of electromotive force. One volt is the force required to product a current of one ampere through a resistance of one ohm.

W

watt

A unit of electrical power that is required to maintain a current of one amp under the pressure of one volt.

Index

Numerics

9pin adaptor, 4-3

A

Acceptance tests, 10-i, 10-1
  test subscribers, 10-1
Access level
  0, 9-14
  1, 9-14
  2, 9-14
Action screens, 2-4, 2-8
Adaptor
  9pin, 4-3
Administration
  ROLM 8000 CBX, 7-i, 7-1
  ROLM 9000/9751 CBX, 8-i, 8-1
ALT, 4-1
  description, 1-3
Analog ports, 9-3
Analog voice ports, 9-3
Assembly, load, and test, 1-3
AUDIX Voice Power R3.0
  requirements, 1-1
Autofill, 9-5, 9-7

B

Boards
  IVP4, 3-2
Book
  commenting on, xix
  related resources, xix
  trademarks in, xviii

C

Cables
  connections, 4-3
Call appearances
  planning, 3-6
Call sequence
  planning, 3-5
Calling party identification pad string
  planning, 3-4
Channels
  planning, 3-5
Clear, A-10
  configuration, A-10
  statistical information, B-7
COM2, 4-3
  connection, 4-3
Commands
  ROLM 8000
    CNT (Change No Test), 7-8
    LCSF (List Class of Service Features), 7-3
    LEX (List Extension), 7-10
    NCH (New Channel), 7-7
    NEX (New Extension), 7-6, 7-21
    REC (Revise Functions), 7-19
    RFC (Revise Functions), 7-13, 7-15, 7-17
    RFD (Revise Forwarding), 7-25
    RHG (Revise Hunt Group), 7-28
    RKB (Revise Key Button), 7-22, 7-24
    ROM (Revise Functions), 7-20
    ROM (Revise Option Module), 7-20
    SCS (Set Class of Service), 7-9, 7-27
    SCSF (Set Class of Service Features), 7-4
  ROLM 9000
    CRE (Create), 8-6
    CRE EXT (Create Extension), 8-5
    CRE HD_Group (Create Hunt Group), 8-24
    LI LEX (List Extension), 8-7
    MO COS_FEATURE APV, 8-3
    MO COS_FEATURE DND, 8-4
    MO COS_FEATURE NFL, 8-3
    MO COS_FEATURE NOH, 8-2
  ROLM 9751
    CRE (Create), 8-6
    CRE EXT (Create Extension), 8-5
    CRE HD_Group (Create Hunt Group), 8-24
    LI LEX (List Extension), 8-7
    MO COS_FEATURE APV, 8-3
    MO COS_FEATURE DND, 8-4
    MO COS_FEATURE NFL, 8-3
    MO COS_FEATURE NOH, 8-2
Comments to this book, xix
Components
  checklist, 1-8
Configuration
  saving, 9-9
Configurations
  checklist, 1-8
CPID
  definition, 3-4
  extension length
    planning, 3-4
  planning, 3-4

CPID extension length, 9-4
CPID pad string, 9-4
Cut-from-service, 11-5
Cut-to-service, 11-i, 11-1

D

Date, 9-13
Diagnostic lights
    SID, 2-2
Diagnostic monitors, B-5

E

Edit screens, 2-4, 2-5
    help, 2-7
        clear, 2-8
        insert, 2-8
        overtype, 2-8
        undo, 2-8
    keys, 2-7
    scroll item, 2-5, 2-6
    single item, 2-5, 2-6
    two item, 2-5, 2-6
Electrostatic discharge, 1-3
ENTER key
    SID, 2-2
Enter key
    SID, 2-2
Erase
    error logs, A-10
Error code number, A-7
Error logs, A-i, A-1, A-6
    code list, A-8
    date, A-7
    purge, A-9
    severity, A-7
    time, A-7
    type, A-7
    viewing, A-7
Extension, 9-6
Extensions, 9-5
    assigning, 9-5
    planning, 3-5

F

Factory assembled systems, 1-3
Fields
    MWI pad string, 9-4
    SID
        CPID pad string, 9-4
        MSG desk number, 9-4

Front panel
SID, 2-2
FUNC key
SID, 2-2
Function key
SID, 2-2

G

Glossary, GL-1

H

Hardware
cables, 4-3
checklist, 1-8
installation, 4-1
maintenance modem, 4-2
SID, 2-1
diagnostic lights, 2-2
front panel, 2-2
keypad, 2-2
link A, 2-2
link B, 2-2
modem port, 2-2
power cord outlet, 2-2
power switch, 2-2
rear panel, 2-2
hardware
SID
LCD display, 2-2
Hunt group
administration, 7-28, 8-23

I

Installation
hardware, 4-1
Integrated call, 10-1
Integration
description, 1-1
illustration, 1-2
IVP4, 3-2

K

Key assignments
ROLMphone 400, 7-12, 8-9
Keypad
SID, 2-2

Keys
MODE, 9-7

L

LCD display
SID, 2-2
LED
status, 4-4
Line, B-3
Link A
connection, 4-3
SID, 2-2
Link B
SID, 2-2
Local devices, 1-3
Logical terminal number
planning, 3-5
LTN, 9-6
planning, 3-5
LTNs, 9-5
assigning, 9-5

M

Maintenance modem, 4-2
Menu screens, 2-4
example, 2-4
name, 2-4
options, 2-4
Metrics mode, B-5
MODE key
SID, 2-2
Mode key
SID, 2-2
Modem, 9-14
maintenance, 4-2
Modem port
SID, 2-2
MWI, A-18
extension length
planning, 3-4
pad string
planning, 3-4
SID, A-18
MWI extension length, 9-4
MWI feature
planning, 3-4
MWI interleave
planning, 3-5
MWI pad string, 9-4
MWL
enhanced processing, A-19

MWL Interleave Factor, A-18

P

Password, 9-15
Pilot number
    planning, 3-6
Planning
    baud rate
        SMDI, 3-5
    call appearances, 3-6
    call sequence, 3-5
    calling party identification pad string, 3-4
    class of service, 3-2
    extension length
        CPID, 3-4
        MWI, 3-4
    extensions, 3-5
    feature configuration table, 3-3
    logical terminal number, 3-5
    message desk number, 3-3
    MWI feature, 3-4
    MWI interleave, 3-5
    MWI pad string, 3-4
    pilot number, 3-6
    ROLMphone interface port address, 3-3
    switch integration, 3-i, 3-1
    voice mail ports, 3-1
    worksheets, 3-1
Ports, 9-6, 9-10
Power cord, 4-4
    connection, 4-4
    SID, 4-4
Power cord outlet
    SID, 2-2
Power switch
    SID, 2-2
Purge
    error logs, A-10

R

Rear panel
    SID, 2-2
Recources to use with this book, xix
Remote access device, 9-14
Requirements
    AUDIX Voice Power R3.0, 1-1
ROLM
    connection
        switch, 4-3
ROLM 8000
    cut-to-service, 11-1
ROLM 8000 CBX, 1-1
    administration, 7-i, 7-1

hardware checklist, 1-8
ROLM 9000
cut-to-service, 11-1
ROLM 9000 CBX, 1-1
hardware checklist, 1-8
ROLM 9000/9751 CBX
administration, 8-i, 8-1
ROLM 9751
cut-to-service, 11-1
ROLM 9751 CBX, 1-1
hardware checklist, 1-8
ROLMphone 400, 1-1
key assignments, 7-12, 8-9

S

Safety
electrostatic discharge, 1-3
work mat, 1-3
wrist strap, 1-3
Screens, 2-1
action, 2-4, 2-8
commands
Mo Ext (modify extension), 10-4, 11-4, 11-8
RFD (revise forwarding), 10-2, 11-2, 11-6
edit, 2-4, 2-5
help, 2-7
clear, 2-8
insert, 2-8
overtype, 2-8
undo, 2-8
keys, 2-7
scroll item, 2-5, 2-6
single item, 2-5, 2-6
two item, 2-5, 2-6
menu, 2-4
example, 2-4
name, 2-4
options, 2-4
ROLM, 10-3, 11-3, 11-7
forward subscriber to pilot number, 10-4, 11-4, 11-8
ROLM 8000
analog port extension creation, 7-6
class of service features, 7-3
Defining the ROLMphone 400 as a Display Phone, 7-21
disable voice port testing, 7-9
extension to analog port assignment, 7-8
Feature Configuration Table Assignment, 7-20
Forward Call Appearance Extensions, 7-26
hunt group assignment, 7-29
ROLMphone 400 Key Emulation Configuration, 7-14, 7-16, 7-18
set class of service, 7-10, 7-27
set service features, 7-5
SID Line Appearance Extension Key Assignments, 7-23, 7-24

SID Line Appearance Extensions, 7-22
voice port administration confirmation, 7-11
ROLM 9000
analog port extension creation, 8-5
class of service features, 8-3, 8-4
create and assign SLI ports, 8-6
hunt group assignment, 8-24
switch group assignment, 8-24
voice port administration confirmation, 8-8
ROLM 9751
analog port extension creation, 8-5
class of service features, 8-3, 8-4
create and assign SLI ports, 8-6
hunt group assignment, 8-24
switch group assignment, 8-24
voice port administration confirmation, 8-8
SID
baud rate, 9-11
byte length, 9-12
call sequence, 9-5
clear setup, A-11
date and time, 9-13
diags, A-12
logs, A-6
MWI feature, 9-4
MWI interleave, 9-5
params, 9-3
parity, 9-12
ROLM main menu, 9-2, 9-3, A-11
serial, 9-11
setup, 9-3, 9-6, A-19
stop bits, 9-12
system tools, 9-14
Utils, 9-11
view mode, B-2
VM port, 9-6
VM_MON view mode, 9-9
SIDadvnc, A-19
SIDlogin, 9-15
Security, B-7
Security level, 9-14, A-6, B-7
password, 9-15
Serial data link, 9-11
AuxPort, 9-11
Centrex, 9-11
SMDI, 9-11
Serial port, 4-3
connection, 4-3
Service Marks, xviii
SID, 1-1, 2-1
administration, 9-1
basic parameters, 9-3
date, 9-13
error logs, A-i, A-1, A-6
viewing, A-7
factory default settings, A-10
hardware, 2-1

diagnostic lights, 2-2
front panel, 2-2
keypad, 2-2
LCD display, 2-2
link A, 2-2
link B, 2-2
modem port, 2-2
power cord outlet, 2-2
power switch, 2-2
rear panel, 2-2
hardware checklist, 1-10
message waiting lamps, A-18
modem, 9-14
MWI, A-18
placement, 1-3
remote access device, 9-14
screens, 2-1
software, 2-4
system parameters, 9-12
testing
ROLMphone set emulation, A-11
time, 9-13
views, B-1
diagnostic monitors, B-5
metrics mode, B-5
statistics mode, B-4
view mode, B-1
voice mail ports, 3-1
Simplified, 3-3
Simplified Message Desk Interface, 3-4
Simplified message desk interface, 1-1
SMDI, 1-1
baud rate
planning, 3-5
planning, 3-3
SMDI packet, 9-9
Software
checklist, 1-8
Start integration, 9-9
Statistics mode, B-4
Subscribers
test, 10-1
Switch group
see hunt group, 7-28, 8-23
Switch integration device, 1-1
hardware checklist, 1-10
System parameters
SID, 9-12

T

Test subscribers, 10-1
Time, 9-13
Trademarks, xviii
Troubleshooting, A-i, A-1

V

View mode, B-1
Views, B-i, B-1
    diagnostic monitors, B-5
    metrics mode, B-5
    statistics mode, B-4
    view mode, B-1

W

Windows, 2-8
Work mat, 1-3
Worksheet
    A
        switch integration information, 3-2
    B
        Extension/LTN Plan, 3-6
    C
        pilot number and call appearance extensions, 3-7
    D
        test subscriber information, 3-8
Worksheets
    planning, 3-1
Wrist strap, 1-3