Modular Messaging for Microsoft Exchange

Release 3

Installation and Upgrades

Issue 1
April 2006

Notice

While reasonable efforts were made to ensure that the information in this document was complete and accurate at the time of printing, Avaya Inc. can assume no liability for any errors. Changes and corrections to the information in this document might be incorporated in future releases.

Documentation disclaimer

Avaya Inc. is not responsible for any modifications, additions, or deletions to the original published version of this documentation unless such modifications, additions, or deletions were performed by Avaya. Customer and/or End User agree to indemnify and hold harmless Avaya, Avaya's agents, servants and employees against all claims, lawsuits, demands and judgments arising out of, or in connection with, subsequent modifications, additions or deletions to this documentation to the extent made by the Customer or End User.

Link disclaimer

Avaya Inc. is not responsible for the contents or reliability of any linked Web sites referenced elsewhere within this documentation, and Avaya does not necessarily endorse the products, services, or information described or offered within them. We cannot guarantee that these links work all the time and we have no control over the availability of the linked pages.

Warranty

Avaya Inc. provides a limited warranty on this product. Refer to your sales agreement to establish the terms of the limited warranty. In addition, Avaya's standard warranty language, as well as information regarding support for this product, while under warranty, is available through the Avaya Support Web site:

http://www.avaya.com/support

License

USE OR INSTALLATION OF THE PRODUCT INDICATES THE END USER'S ACCEPTANCE OF THE TERMS SET FORTH HEREIN AND THE GENERAL LICENSE TERMS AVAILABLE ON THE AVAYA WEB SITE http://support.avaya.com/LicenseInfo/ ("GENERAL LICENSE TERMS"). IF YOU DO NOT WISH TO BE BOUND BY THESE TERMS, YOU MUST RETURN THE PRODUCT(S) TO THE POINT OF PURCHASE WITHIN TEN (10) DAYS OF DELIVERY FOR A REFUND OR CREDIT.

Avaya grants End User a license within the scope of the license types described below. The applicable number of licenses and units of capacity for which the license is granted will be one (1), unless a different number of licenses or units of capacity is specified in the Documentation or other materials available to End User. "Designated Processor" means a single stand-alone computing device. "Server" means a Designated Processor that hosts a software application to be accessed by multiple users. "Software" means the computer programs in object code, originally licensed by Avaya and ultimately utilized by End User, whether as stand-alone Products or pre-installed on Hardware. "Hardware" means the standard hardware Products, originally sold by Avaya and ultimately utilized by End User.

License Type(s)

Designated System(s) License (DS). End User may install and use each copy of the Software on only one Designated Processor, unless a different number of Designated Processors is indicated in the Documentation or other materials available to End User. Avaya may require the Designated Processor(s) to be identified by type, serial number, feature key, location or other specific designation, or to be provided by End User to Avaya through electronic means established by Avaya specifically for this purpose.

Concurrent User License (CU). End User may install and use the Software on multiple Designated Processors or one or more Servers, so long as only the licensed number of Units are accessing and using the Software at any given time. A "Unit" means the unit on which Avaya, at its sole discretion, bases the pricing of its licenses and can be, without limitation, an agent, port or user, an e-mail or voice mail account in the name of a person or corporate function (e.g., webmaster or helpdesk), or a directory entry in the administrative database utilized by the Product that permits one user to interface with the Software. Units may be linked to a specific, identified Server.

Database License (DL). Customer may install and use each copy of the Software on one Server or on multiple Servers provided that each of the Servers on which the Software is installed communicate with no more than a single instance of the same database.

Named User License (NU). Customer may: (i) install and use the Software on a single Designated Processor or Server per authorized Named User (defined below); or (ii) install and use the Software on a Server so long as only authorized Named Users access and use the Software. "Named User," means a user or device that has been expressly authorized by Avaya to access and use the Software. At Avaya's sole discretion, a "Named User" may be, without limitation, designated by name, corporate function (e.g., webmaster or helpdesk), an e-mail or voice mail account in the name of a person or corporate function, or a directory entry in the administrative database utilized by the Product that permits one user to interface with the Product.

Shrinkwrap License (SR). With respect to Software that contains elements provided by third party suppliers, End user may install and use the Software in accordance with the terms and conditions of the "shrinkwrap" or "clickwrap" license accompanying the Software ("Shrinkwrap License"). The text of the Shrinkwrap License will be available from Avaya upon End User's request (see "Copyright" below for more information).

Copyright

Except where expressly stated otherwise, the Product is protected by copyright and other laws respecting proprietary rights. Unauthorized reproduction, transfer, and or use can be a criminal, as well as a civil, offense under the applicable law.

Third-party Components

Certain software programs or portions thereof included in the Product may contain software distributed under third party agreements ("Third Party Components"), which may contain terms that expand or limit rights to use certain portions of the Product ("Third Party Terms"). Information identifying Third Party Components and the Third Party Terms that apply to them is available on the Avaya Support Web site:

http://support.avaya.com/ThirdPartyLicense/

Preventing Toll Fraud

"Toll fraud" is the unauthorized use of your telecommunications system by an unauthorized party (for example, a person who is not a corporate employee, agent, subcontractor, or is not working on your company's behalf). Be aware that there might be a risk of toll fraud associated with your system and that, if toll fraud occurs, it can result in substantial additional charges for your telecommunications services.

Avaya Fraud Intervention

If you suspect that you are being victimized by toll fraud and you need technical assistance or support, call Technical Service Center Toll Fraud Intervention Hotline at +1-800-643-2353 for the United States and Canada. For additional support telephone numbers, see the Avaya Support Web site:

http://www.avaya.com/support

Providing Telecommunications Security

Telecommunications security (of voice, data, and/or video communications) is the prevention of any type of intrusion to (that is, either unauthorized or malicious access to or use of) your company's telecommunications equipment by some party.

Your company's "telecommunications equipment" includes both this Avaya product and any other voice/data/video equipment that can be accessed by this Avaya product (that is, "networked equipment").

An "outside party" is anyone who is not a corporate employee, agent, subcontractor, or is not working on your company's behalf. Whereas, a "malicious party" is anyone (including someone who might be otherwise authorized) who accesses your telecommunications equipment with either malicious or mischievous intent.

Such intrusions might be either to/through synchronous (time-multiplexed and/or circuit-based), or asynchronous (character-, message-, or packet-based) equipment, or interfaces for reasons of:

- Utilization (of capabilities special to the accessed equipment)
- Theft (such as, of intellectual property, financial assets, or toll facility access)
- Eavesdropping (privacy invasions to humans)
- Mischief (troubling, but apparently innocuous, tampering)
- Harm (such as harmful tampering, data loss or alteration, regardless of motive or intent)

Be aware that there might be a risk of unauthorized intrusions associated with your system and/or its networked equipment. Also realize that, if such an intrusion should occur, it might result in a variety of losses to your company (including but not limited to, human/data privacy, intellectual property, material assets, financial resources, labor costs, and/or legal costs).

Responsibility for Your Company's Telecommunications Security

The final responsibility for securing both this system and its networked equipment rests with you — Avaya's customer system administrator, your telecommunications peers, and your managers. Base the fulfillment of your responsibility on acquired knowledge and resources from a variety of sources including but not limited to:

- Installation documents
- System administration documents
- Security documents
- Hardware-/software-based security tools
- Shared information between you and your peers
- Telecommunications security experts

To prevent intrusions to your telecommunications equipment, you and your peers should carefully program and configure:

- Your Avaya-provided telecommunications systems and their

interfaces
- Your Avaya-provided software applications, as well as their underlying hardware/software platforms and interfaces
- Any other equipment networked to your Avaya products

TCP/IP Facilities

Customers might experience differences in product performance, reliability and security depending upon network configurations/design and topologies, even when the product performs as warranted.

Standards Compliance

Avaya Inc. is not responsible for any radio or television interference caused by unauthorized modifications of this equipment or the substitution or attachment of connecting cables and equipment other than those specified by Avaya Inc. The correction of interference caused by such unauthorized modifications, substitution or attachment is the responsibility of the user. Pursuant to Part 15 of the Federal Communications Commission (FCC) Rules, the user is cautioned that changes or modifications not expressly approved by Avaya Inc. might void the user's authority to operate this equipment.

Federal Communications Commission Statement

Part 15:

Note: This equipment has been tested and found to comply with the limits for a Class A digital device, pursuant to Part 15 of the FCC Rules. These limits are designed to provide reasonable protection against harmful interference when the equipment is operated in a commercial environment. This equipment generates, uses, and can radiate radio frequency energy and, if not installed and used in accordance with the instruction manual, may cause harmful interference to radio communications. Operation of this equipment in a residential area is likely to cause harmful interference in which case the user will be required to correct the interference at his own expense.

Canadian Department of Communications (DOC) Interference Information

This Class A digital apparatus complies with Canadian ICES-003.

Cet appareil numérique de la classe A est conforme à la norme NMB-003 du Canada.

This equipment meets the applicable Industry Canada Terminal Equipment Technical Specifications. This is confirmed by the registration number. The abbreviation, IC, before the registration number signifies that registration was performed based on a Declaration of Conformity indicating that Industry Canada technical specifications were met. It does not imply that Industry Canada approved the equipment.

European Union Declarations of Conformity

CE

Avaya Inc. declares that the equipment specified in this document bearing the "CE" (*Conformité Europeénne*) mark conforms to the European Union Radio and Telecommunications Terminal Equipment Directive (1999/5/EC), including the Electromagnetic Compatibility Directive (89/336/EEC) and Low Voltage Directive (73/23/EEC).

Copies of these Declarations of Conformity (DoCs) can be obtained by contacting your local sales representative and are available on the Avaya Support Web site:

http://www.avaya.com/support

Trademarks

Avaya is a registered trademark of Avaya Inc.

Aria, AUDIX, DEFINITY, INTUITY, and Serenade are registered trademark of Avaya Inc.

Mailbox Manager and COMPAS are trademarks of Avaya Inc.

All non-Avaya trademarks are the property of their respective owners.

Document ordering information:
Avaya Publications Center

For the most current versions of documentation, go to the Avaya Support Web site:

http://www.avaya.com/support

Avaya support

Avaya provides a telephone number for you to use to report problems or to ask questions about your product. The support telephone number is 1-800-876-2835 in the United States. For additional support telephone numbers, see the Avaya Support Web site:

http://www.avaya.com/support

Contents

About this book

This book, *Avaya Modular Messaging for Microsoft Exchange Release 3 Installation and Upgrades*, Issue 1, contains instructions for installing or upgrading the Avaya Modular Messaging software in a Microsoft Exchange environment.

The Avaya-provided hardware for new systems is the Avaya S3500-family message server hardware. Upgraded Avaya-hardware systems can use Avaya S3400-family message server hardware, or upgrade to the new Avaya hardware.

Customer-provided equipment (CPE) for a Modular Messaging install or upgrade must match the specifications described in *Avaya Modular Messaging Concepts and Planning Guide*.

Information in this book includes:

- Instructions for installing a new system, including equipment assembly, set up and configuration, initial administration, and acceptance testing
- Instructions for upgrading a system from Modular Messaging Release 1.1 software

Note:

Use this document to get a Modular Messaging system up and running. After the installation, customers must tailor the Modular Messaging parameters for their site. For more information, see the *Avaya Modular Messaging Software Messaging Application Server Administration Guide* (PDF 3 MB). For additional information about installing and initial administration for Web Subscriber Options, see *Modular Messaging Web Subscriber Options Server Installation*. Copies of these guides are available on the *Avaya Modular Messaging Documentation* media or from the Avaya Support web site at http://www.avaya.com/support.

Intended audiences

This book is intended for system administrators and on-site technical support staff. The content is targeted to those who installing, configure, or upgrade the hardware and software for an Avaya Modular Messaging system.

Users of this book must be familiar with administering Microsoft Windows 2000 or 2003 and Microsoft Exchange systems. Avaya assumes that users have read the *Avaya Modular Messaging Concepts and Planning Guide*.

Technicians who install an Avaya-provided Messaging Application Server should have completed a relevant hardware installation training course. For information on training, see Related resources on page xviii.

Changes to this book

Changes from Release 1.1 issue of this book, published in December 2003, include:

- New hardware installation procedures for Avaya S3500-family message servers.
- New port board installation procedures for customer-provided servers.
- New software installation procedures for both S3500-family servers and customer-provided servers.
- New upgrade procedures for S3500-family servers, S3400-family servers and customer-provided servers.
- Microsoft Exchange 5.5 is not supported. Procedures require Microsoft Exchange 2003 System Management Tools. Microsoft Exchange 2000 System Management Tools are not supported.

How to use this book

Review the appropriate section, depending on whether you are installing a new Avaya Modular Messaging system, or upgrading a system that was already in operation.

Installing a new system

This document describes how to install Avaya Modular Messaging software either on a customer-provided Messaging Application Server (MAS), or on hardware provided by Avaya. Avaya-provided hardware is called the *Avaya MAS* in this guide. Although most steps are similar for both types of installation, this guide does contain sections that are only applicable to one or another of these specific hardware types, as noted in the text.

Before you start a new installation:

1. Verify that the system meets the requirements specified in the *Avaya Modular Messaging Concepts and Planning Guide* (PDF 2 MB). The planning guide explains important concepts and provides information that is crucial for planning a Modular Messaging installation.
2. Complete *all* the worksheets in Appendix A: System planning forms on page 209 You *cannot* complete an installation successfully unless this material is complete and accurate. The customer must provide some of the information in advance.
3. Enter the information collected on the planning forms into the Avaya Modular Messaging Data Collection Tool (DCT). Usually a project planner completes this task in advance of the installation, and sends the DCT data file to the on-site technical support representative.
4. Print the checklist for a new installation from Appendix B: Installation and upgrade checklists on page 231. Use it to track your progress. There are different checklist for the Avaya MAS and CPE MAS. Be sure to print the checklist for your configuration.
5. Read Chapter 1: Preinstallation requirements on page 1. This chapter lists installation prerequisites, including the required documentation, software, tools, and equipment that you need to complete an installation.

Using the checklist as a guide, follow the directions in each subsequent chapter to install, configure, and test the Modular Messaging software.

Upgrading or recovering a system

To upgrade a Modular Messaging system for either the Avaya MAS or customer-provider MAS:

1. Obtain a copy of the filled-out worksheets that were completed for the original system installation. Obtain the latest copy of the Release 3 planning forms, and enter any new information that is required.

2. Print the relevant upgrade checklist from Appendix B: Installation and upgrade checklists on page 231. Use it to track your progress. There are different checklist for the Avaya MAS and CPE MAS. Be sure to print the checklist for your configuration.
3. Obtain the software and documentation listed in the chapter overview of the configuration you are upgrading.
4. Follow the instructions in the appropriate chapter to upgrade the system.

- *For an* Avaya MAS*, see* Chapter 10: Upgrading Modular Messaging software on an Avaya MAS on page 151
- For a CPE MAS, see Chapter 11: Upgrading Modular Messaging software on a customer-provided server on page 187

To recover an MAS from a catastrophic disk failure:

1. Print a copy of the disk failure recovery checklist in Appendix G: Disk Failure Recovery on page 289.
   - For an Avaya MAS, see Recovering from a catastrophic disk failure on an Avaya MAS on page 290
   - For a customer-provided MAS, see Recovering from a catastrophic disk failure on a customer-provided MAS on page 296
2. Follow the procedures in the references chapters to recover the MAS.

Using links in this document

For your convenience, the installation guide provides direct linking to other files or pages when viewed in PDF form. Links appear in blue text and operate as follows:

- Internal links within this document always work when you are using the PDF version of this guide. Internal links include those to tables, figures, or other sections of the book.
- You might view the PDF version of this guide on the documentation media or on a Web site that contains the complete document set. If you do, you can click any blue link to an external file, such as another PDF file or HTML file to view the linked page or document.
- You might use the PDF version of this installation guide on a system that is connected to the Internet. If you do, you can click the blue link for any Web site address, such as www.avaya.com, to go directly to the linked page.

Trademarks

Related resources

This section describes additional documentation and training available to you.

Documentation

For information about items in the documentation set for this product, go to the Avaya Support Web site at http://www.avaya.com/support. Always use the appropriate CD or book to obtain specific information about planning, installing, administering, or maintaining an Avaya system.

Technical assistance

The following technical assistance is available if needed.

Remote support center

Your project manager or systems consultant is responsible for providing you with the telephone number of the appropriate remote support center.

The following numbers are available for technical assistance with Avaya products and services:

- Within the United States and Canada: call 1-800-876-2835, choose prompt **2**, and then choose **2** again.
- Within any other country: call your local distributor.

Help on the system

Online help is available on the MAS. Use the Help menu or **Help** button (if available) for the application or wizard you are in.

Training

For information about product training, go to the Avaya Web site at www.avaya.com and click **Training**.

How to comment on this book

Avaya is interested in your suggestions for improving this information. Use one of the following methods to communicate with us:

Method	Contact
E-mail	infodev@avaya.com
Voice mail or fax	303-538-9625

Be sure to include the name, issue number, and date of this book:

Avaya Modular Messaging for Microsoft Exchange Release 3 Installation and Upgrades, Issue 1, April 2006.

Chapter 1: Preinstallation requirements

This chapter describes requirements and prerequisites for installing Avaya Modular Messaging software in a Microsoft Exchange environment.

Topics in this chapter include:

Required documentation and software

You must use the documentation and software described in this section to install or upgrade an Avaya Modular Messaging system. You can obtain some of this information only from the Avaya Web site, such as the configuration notes or Avaya software patches. Other information is available on the *Avaya Modular Messaging Documentation* media that is shipped with the system software. However, you can also access this information online in advance.

Download or print out all required files and information before you go to the customer site. Some Modular Messaging sites do not have Internet access.

Note:

Always check the Avaya Support Web site at http://www.avaya.com/support for recent updates and current information before starting an installation or upgrade.

Obtaining information on the Web

Obtain the documentation required for a new Modular Messaging installation or upgrade before you go on site. Information includes:

Note:

Be aware that links and paths on the Avaya Support Web site might change.

- Configuration notes are required for integrating the MAS and any installed Dialogic port boards with the PBX or switch at this site. To obtain the most current copy:

  a. Go to the Avaya Support Web site at http://www.avaya.com/support.

b. Click the link to **Find documentation and downloads by product name**.

c. Under **M**, click **Modular Messaging**.

d. On the Modular Messaging page, select Release **3.0** from the drop-down list.

e. Click **Configuration Notes**.

f. Download or print the configuration notes for the switch integration you need.

Note:

This information is available *only* on the Avaya Support Web site and *must* be obtained before you install the software.

- The Avaya Support Web site provides access to an Microsoft Word version of the planning forms, and the installation and upgrade checklists. The Word document is an editable version of the information in Appendix A: System planning forms on page 209 and Appendix B: Installation and upgrade checklists on page 231. To download a Microsoft Word or PDF version of this file:

  a. On the Modular Messaging page, click **View all documents**.

  b. Locate the link for the system planning forms in this list.

  c. Follow the link to download the version of the planning forms that you need.

- Additional information needed for installing a new system is on the *Avaya Modular Messaging Documentation* media. To access this information online:

  a. On the Modular Messaging page, click **Documentation Library (CD Collections)**.

  b. Click **Avaya Modular Messaging Release 3 Documentation**.

  c. Click **View HTM**.

  d. On the Modular Messaging documentation menu, click the link to view the document set.

  e. Click **Reference** for a list of downloadable documents.

  f. Either click to view or print files, or right-click to download the files you need:

  - Any Dialogic port board documents appropriate for this site. For more information, see Table 7: Supported MAS port boards—S3500-family servers on page 20 or Table 8: Supported MAS port boards for customer-provided servers on page 44.
  - *Avaya Modular Messaging Subscriber Options User Guide* (PDF) or *Avaya Modular Messaging Client Add-in for Microsoft Outlook User Guide* (PDF). You use these documents for acceptance testing.
  - The planning forms and checklists in Microsoft Word or PDF format.

Note:

You can use the PDF version of this installation guide on the documentation media or on a Web site that contains the complete document set. If you then click any blue link, such as the examples shown in this list, you go directly to the linked page or document.

Obtaining software updates on the Web

You must update the Avaya Modular Messaging software for each installation or upgrade to bring it up to date with the latest changes. To obtain the latest Avaya Service Pack (SP), software patches, and hotfixes for this system:

1. Go to the Avaya Support Web site at http://www.avaya.com/support.
2. Access the Modular Messaging page for Release 3. For complete steps, see Obtaining information on the Web on page 1.
3. Click **Downloads**.
   a. Download any files needed to update a Release 3 system. For example, download the MMDCTDistribute.exe self-extracting zip file to update the DCT program. Ensure that you download any instructions required to install the Service Pack or software update.
   b. Copy the downloaded files to a USB storage device such as a flash drive, memory stick, or equivalent. Bring the USB storage device with you to the installation site.

Documentation and software shipped with the system

The software and documentation listed in Table 1 ships with each Modular Messaging system.

Table 1: Required Modular Messaging software

Disk	Purpose
Avaya Modular Messaging Messaging Application Server Software —2 DVD set	• Installing the Modular Messaging software, Dialogic port board drivers, and Text-to-Speech (TTS) software • Upgrading an MAS that is running Modular Messaging R1.1 software to Release 3
Avaya Modular Messaging Documentation media Two copies are shipped, one for the customer and one for the technician.	Accessing required documentation, including: • The port board installation documents • *Avaya Modular Messaging Subscriber Options User Guide* (PDF) or *Avaya Modular Messaging Client Add-in for Microsoft Outlook User Guide* (PDF), used for acceptance testing • Any required hardware replacement procedures
Avaya Modular Messaging Messaging Application Server and Boot Software for Microsoft Exchange —3 DVD set	*For S3500-family server hardware,* reinstalling the boot-image software on an Avaya server. You might do this to upgrade a system to Release 3, or after you replace a hard disk drive. For more information, see Appendix F: Reloading software on an Avaya MAS on page 283.

Security considerations

The following security-related issues apply to all Modular Messaging installations.

On-site security

On-site installers must take precautions to protect passwords and restrict access to the system.

Password security

To protect password security:

- Do not leave written passwords lying out or allow anyone to see them.
- At the first opportunity, give the passwords directly to the designated customer representative.
- If you suspect that the security of the system was compromised, notify the project manager or system administrator.

System security during installation

To protect system security during the installation:

- Remove all test subscribers and test mailboxes from the system when the procedures instruct you to do so.
- Always log off or lock the server if you leave it unattended, even for a short period of time.
- Give a copy of the most current DCT data file to the customer and the appropriate support organization after you finish an installation or upgrade. Afterwards, remove the DCT data file from your USB storage device or laptop.

Ongoing system security

Customers are responsible for obtaining and installing anti-virus software on any Microsoft Windows computer that is to run Avaya Modular Messaging software. Customers must also routinely install Avaya-approved updates for Microsoft Windows systems to protect the system from known security weaknesses. Updates include operating system updates, security patches, and hotfixes. For more information, see “Modular Messaging and security“on the *Avaya Modular Messaging Documentation* media.

Note:

Avaya technical support representatives must follow their specified internal procedures for verifying the software that is installed. If required, they must update the software with the latest patches as instructed.

Test equipment and tools

Obtain the following test equipment and tools for all new Modular Messaging installations.

Test equipment

Recommended test equipment for a successful installation includes:

- At least one telephone that is connected through the switch or Private Branch Exchange (PBX). The telephone must be of the same type as the majority of telephones the customer plans to use on the system.
  - If the message waiting indicator (MWI) for the system is a lamp, the test telephone must be equipped with a lamp. If the MWI is a stutter tone, the telephone must be able to provide the stutter notification.
  - Place the test telephone so you can easily see the monitor while using the telephone.
- A volt/ohm meter.

Tools

You must have the following tools on site to successfully install a new system:

- A medium-width flat-blade screwdriver
- A No. 2 Phillips screwdriver
- A small pair of needlenose pliers
- A small pair of wire cutters
- A sharp, pointed instrument, such as a ballpoint pen

CAUTION:

Do *not* use the point of a lead pencil to operate the system reset switch. The graphite can damage a circuit board and cause problems, such as electrical shorts.

Initial switch and LAN administration

This section describes the initial switch or Private Branch Exchange (PBX) and local area network (LAN) administration that is required. Customers must complete this administration before or during a new Avaya Modular Messaging installation.

Initial switch or PBX administration

Initial switch or PBX administration might or might not be complete when you arrive on site, depending on the contract or customer agreements. When you install a new server, the switch administration must support:

- Testing the system with at least one test subscriber.
- Cut to service procedures that provide the subscribers with an active coverage path.
- For configurations that use analog and DSE port boards, the ability for testers to call each channel individually. The appropriate party must test each channel to be connected to the system before assigning the channels to the server or another application.

Verify that initial switch administration and testing is complete before you start.

Initial LAN administration

The LAN administrator must administer the corporate LAN for the messaging system. Some LANs might be administered before the on-site installation starts. Other LANs require that the administration for a new server be done at the time of installation.

Note:

Avaya is not responsible for the installation, administration, or test of communications between customer computers and the LAN.

Preinstallation planning forms

Complete the planning forms in Appendix A: System planning forms on page 209 before you start an installation. By gathering the data in advance, you can save hours of installation time and debugging.

CAUTION:

It is crucial to coordinate the IP addresses that are to be used with the Avaya Modular Messaging system with those on the corporate LAN. If you specify an IP address for a message server that conflicts with another Ethernet endpoint, the resulting traffic problems on the local area network can be extremely difficult to diagnose and solve.

Hardware requirements

A Modular Messaging software installation requires the following hardware:

- One or more Messaging Application Server (MAS) units that will run the Modular Messaging software. These MASs can be:
  - An Avaya-provided Messaging Application Server, called the *Avaya MAS* in this guide. An Avaya MAS has the port boards and much of the required software already installed. Some preinstallation requirements for this configuration are covered in Chapter 2: Installing Avaya-provided hardware on page 9.
  - A customer-provided equipment (CPE) server that meets the minimum requirements specified in the *Avaya Modular Messaging Concepts and Planning Guide* (PDF). A CPE server requires the appropriate port boards and drivers to be installed before you install the Modular Messaging software. For more information, see Chapter 3: Installing Dialogic port boards in a customer-provided MAS on page 43.

  Note:

  No hardware installation is required if you are using an IP H.323 or IP SIP switch integration on a customer-provided MAS.

- A server that is running a compatible release of Microsoft Exchange software. This server is hereafter referred to as the *Exchange server*.
- A server that contains the subscriber mailboxes, such as Active Directory or the Microsoft Exchange Administrator application. This server is hereafter referred to as the *directory server*. This server can be the same as the Exchange server, or it can be a separate computer.

Both the Exchange server and the directory server must be in place and operational before installing the Modular Messaging software.

Note:

Chapter 4: Preparing to install Modular Messaging software on page 55 describes prerequisite steps that must be performed by the directory server administrator or other authorized personnel. This work can be done before or during hardware installation, but *must* be completed before any other Modular Messaging software is installed.

Because a Modular Messaging installation requires many steps, print a copy of the checklist relevant to this configuration. See Appendix B: Installation and upgrade checklists on page 231. Check off items as you complete them to track your progress.

Chapter 2: Installing Avaya-provided hardware

Avaya Inc. can provide the hardware for the Modular Messaging system. Avaya-provided hardware includes one or more Avaya Messaging Application Servers, called the *Avaya MAS* in this guide, and other optional peripheral devices. Any required port boards and much of the required software are already installed in an Avaya-provided MAS.

Note:

Before you can successfully complete the tasks described in this section, you must verify that all preinstallation requirements were met. See Chapter 1: Preinstallation requirements on page 1.

CAUTION:

This chapter applies *only* to installing Avaya-provided hardware. The hardware can include one or more Avaya Messaging Application Server (Avaya MAS) units and any Avaya-provided peripheral equipment.

To install port boards in a *customer-provided MAS*, continue with Chapter 3: Installing Dialogic port boards in a customer-provided MAS on page 43.

Topics in this chapter include:

Overview

A new system installation follows these basic steps:

- Preparing the site for the Avaya Modular Messaging system
- Identifying the servers and unpacking the system components
- Installing the Avaya MAS and its peripheral equipment.

Note:

Because a Modular Messaging installation requires many steps, print a copy of the checklist from Appendix B: Installation and upgrade checklists on page 231. Check off items as you complete them to track your progress.

Site requirements for Avaya message servers

This section describes the physical requirements for Avaya-provided equipment, including environmental, weight, space, and power considerations. These specifications apply to any Avaya-provided server that uses Avaya S3500-family message server hardware.

Environmental requirements

Table 2 lists the environmental conditions that must be maintained in the area where an Avaya S3500-family message server is installed and operated. Maximum heat output is shown in British thermal units (BTUs).

Table 2: Environmental requirements for S3500-family servers

Operating state	Temperature	Humidity (noncondensing)	Maximum heat output
Operating	+10 to +35ºC (+50 to +95ºF)	20% to 80% RH	1498 BTU per hour
Nonoperating — in storage or being shipped	-20 to +50ºC (-4 to+122ºF)	20% to 90% RH	N/A

Weight and space considerations

Table 3 lists the weight and spacial dimensions of an Avaya S3500-family message server.

Table 3: Weight and space considerations for S3500-family servers

Server	Weight (full)	Height	Width	Depth
Avaya Messaging Application Server (Avaya MAS) or supplementary server	36 lb (16.3 kg) without port boards	3.5 in. (9 cm)	16.9 in. (43 cm)	26 in. (66 cm)

For safety considerations, at least two technicians must be available to mount the units.

Customer-provided cabinet requirements

If an Avaya S3500-family message server is to be installed in a rack-mount configuration, the customer-provided cabinet must meet the following requirements:

- The cabinet must contain a 4-post rack to support the weight of the servers.
- The cabinet must be secured to the floor before you attempt to mount any units.
- The sliding rails provided with each server are designed for mounting in cabinets 26 to 36 inches in depth.
- The cabinet height must accommodate the number of units to be mounted. For more information about server height, see Table 3. The cabinet might also need to hold the MAS modems, UPS, and optional equipment, such as the KVM switch. For an example of a rack-mount system, see Figure 3: Example of a rack-mount system with S3500-family servers—front view on page 22.

Installation area requirements

Observe the following when determining where to place the system:

- Maintain an air-distribution system that provides adequately cooled, filtered, and humidity-controlled air.
- Do *not* install Avaya S3500-family message servers in such a way that the ventilation or fan openings are blocked.
- For T1 and E1 QSIG connections, the circuits require isolation from exposed lines. For T1 lines, the customer must provide a CSU (T1) at the building point of entry. This CSU must be UL Listed, CSA Certified, or both. For E1 lines, either the network provider or the customer must provide a CSU (E1) or other equivalent protection. The protection must have the product safety approvals required by the local jurisdictions.

  CAUTION:
  To reduce the risk of fire, use only No. 26 AWG or larger telecommunications line cord.

- Systems in Finland, Norway, Sweden, and Australia must be installed in a restricted-access location. A restricted-access location is an installation site where only technical support staff or customers who are instructed on the reasons for the restricted access can gain access. Authorized personnel must also be trained in all required safety precautions. A restricted-access location also allows access through the use of a tool, such as a lock and key, or other means of security.

Power requirements

Table 4 lists the power requirements for Avaya S3500-family message servers. Use these figures for equipment room planning, not for UPS sizing. The AC power supply source must be a single phase 3-conductor consisting of line, neutral, and ground connections.

Table 4: Power requirements for S3500-family servers

Server	Number of power supply units	Volts AC	Hertz	Maximum amperes 120V/240V
Avaya MAS or supplementary server	1	90 to 264 Vac	47 to 63 Hz	8.0/4.0

For equipment room planning, the AC power source requires a 15 A circuit breaker for 100-127 Vac installations or a 10 A circuit breaker for 200-240 Vac installations. Consider the server connection to a branch circuit with regard to overload or overcurrent protection. Verify the system ratings to ensure that, together with other equipment connected to the same branch circuit, an overcurrent or overload condition does not exist.

Note:

All Modular Messaging systems must use an uninterruptible power supply (UPS). To size a UPS, use the maximum power dissipation figures in watts. For example, an Avaya MAS with port boards dissipates up to 450 watts, assuming 65% power supply efficiency. This figure divided by 120 Vac is about 4 amps per server.

Grounding requirements

An Avaya S3500-family message server relies on the ground connection through the mains socket-outlet for safe operation. Ensure that the AC main outlet used to power the system, through the power cord or the UPS, is a grounded outlet. If you are unsure of the ground integrity of the outlet, have a trained and certified electrician check the outlet.

DANGER:

You *must* connect the S3500-family servers to an earthed mains socket-outlet. If you fail to do so, you allow a hazard to be present that might cause severe personal injury or death.

In addition, observe the following grounding requirements for the server location:

- Use only the power cord provided with each unit to connect that unit to the universal power supply (UPS) or to an AC mains outlet.
- Install the server within 6 feet (2 m) of a grounded AC mains socket-outlet.

- Do *not* use extension cords with the system.

CAUTION:

System grounding must comply with the general rules for grounding. For more information, see article 250 of the National Electrical Code (NEC), National Fire Protection Agency (NFPA). Alternatively, see the applicable electrical code in the country of installation.

Demarcation points

This section lists the demarcation points for switches (PBXs) and LAN connectivity.

Demarcation point for switches (PBXs)

For Avaya switches, the demarcation point for switch (PBX) connections to an Avaya Modular Messaging server is the wall field.

For non-Avaya switches, the demarcation point is the end of the connector of the Avaya-provided cables for the port boards. Avaya technical support representatives dispatched for the system installation are not responsible for making any connections directly to switches that Avaya does not maintain.

Note:

Avaya recommends joint acceptance testing for systems integrated with switches that Avaya does not maintain.

Demarcation point for LAN connectivity

The demarcation point for the LAN connection to an Avaya Modular Messaging server is the physical Ethernet interface on the server that connects to the corporate LAN. The customer is responsible for:

- Providing the LAN cables that connect the Avaya Modular Messaging server to the corporate system. If the customer uses Avaya-provided cables, the demarcation point is the modular connector at the end of the LAN cables.
- Doing LAN administration that is not done on the Modular Messaging server.
- Maintaining the TCP/IP addresses and administration on the server after cutover, unless otherwise specified by contract.
- Providing the IP address, subnet mask, and gateway information for administration on the server.
- Providing any DNS server IP information and corporate domain names.

Avaya technical support representatives dispatched for system installation are not responsible for troubleshooting the customer LAN.

Identifying Avaya S3500-family message servers

An Avaya Modular Messaging system contains the following S3500-family servers:

- One to ten Avaya Messaging Application Server (Avaya MAS) units, depending on the system configuration. The MASs handle voice calls. They might contain telephony port boards, depending on the type of switch integration that is to be used.
- *Optional:* One or more additional servers that provide other messaging-related services. The additional *supplementary* servers might be customer-provided servers or Avaya MAS-like units. For more information, see Identifying Avaya MAS-like servers on page 15.

Note:

A supplementary server might use customer-provided equipment. For more information, see Using customer-provided equipment (CPE) servers on page 15.

Identifying Modular Messaging servers

If a system ships with several S3500-family servers, it is crucial to correctly identify each server. The installation and configuration procedures vary for different types of servers.

To help you identify each server, the S3500-family servers have two labels:

- A label on the right side of the server near the front identifies the type of S3500-family server, such as an Avaya Modular Messaging (MM) MAS.
- A label on the left side of the server near the middle identifies the software that is preinstalled on an Avaya-provided server. For a list of labels, see Table 5.

Table 5: Labels for S3500-family servers

Label—MM stands for Modular Messaging	Server type	Action
AVAYA MM MAS SOFTWARE LOADED: • EXCHANGE STORE • DOMINO STORE • AVAYA MSS STORE	MAS	Check the box for **EXCHANGE STORE**.
AVAYA MM SUPPLEMENTARY SERVER: • DOM/EXCH TRACING—Domino or Exchange system Tracing server • OLA—Offline Access server • WEB CLIENT—Web Client server—*available only for MSS configurations.* • WEB SUB OPTS—Web Subscriber Options • UCC-SA SERVER—Unified Communication Center Speech Access server	Supplementary server for various optional applications	Check all appropriate boxes to identify the purpose and content of the supplementary server. **Note:** If a server is to host multiple applications, check multiple boxes such as **DOM/EXCH TRACING** and **WEB SUB OPTS**.

Check the label on each server to identify the purpose and content of the server. Use the label as a guide to correctly install the server and load any required application software.

Identifying Avaya MAS-like servers

In addition to the label, you can identify servers that you *must* set up as an Avaya Messaging Application Server (Avaya MAS) as follows:

- You *must* set up any server that has telephony port boards as an MAS.

  Note:

  Systems that use an IP H.323 or IP SIP switch integration do not use port boards.

- All Avaya-provided MASs have the *Avaya Modular Messaging Messaging Application Server Software* media in the box. The application media identifies the server as an MAS even if the server does not contain telephony port boards.
- Avaya-provided supplementary servers have only the boot software media in the box.

Identifying and installing additional servers

Customers might order a separate server to run the following optional services:

- Web Subscriber Options—can be on its own server or co-resident on an MAS. Check the planning forms to determine if you must activate Web Subscriber Options on a particular server. For more information, see *Avaya Modular Messaging Web Subscriber Options Server Installation* (PDF).
- Any server that provides only storage for offline access to messages. This server is called the offline access (OLA) server. An OLA server might also support resource-intensive administrative tools such as the Reporting Tool.

  Note:

  These additional servers might use either Avaya S3500-family message server hardware or customer-provided equipment (CPE).

Using customer-provided equipment (CPE) servers

Some customers might choose to provide their own servers to support messaging-related services or other applications. Any server that does *not* use Avaya-provided hardware is considered customer-provided equipment (CPE). The customer is responsible for installing and maintaining all CPE servers. For more information about installing or configuring CPE servers, see Chapter 7: Configuring a customer-provided server on page 91.

Identifying key components of S3500-family servers

This section describes the key components of Avaya-provided S3500-family servers.

CAUTION:

The same hardware can be used both as an Avaya Messaging Application Server (Avaya MAS), and as a supplementary server that provides special services. To distinguish the Avaya MAS units from any optional supplementary servers, see Identifying Modular Messaging servers on page 14.

Figure 1 shows the front view of an Avaya S3500-family message server.

Figure 1: S3500-family server—front view with bezel removed

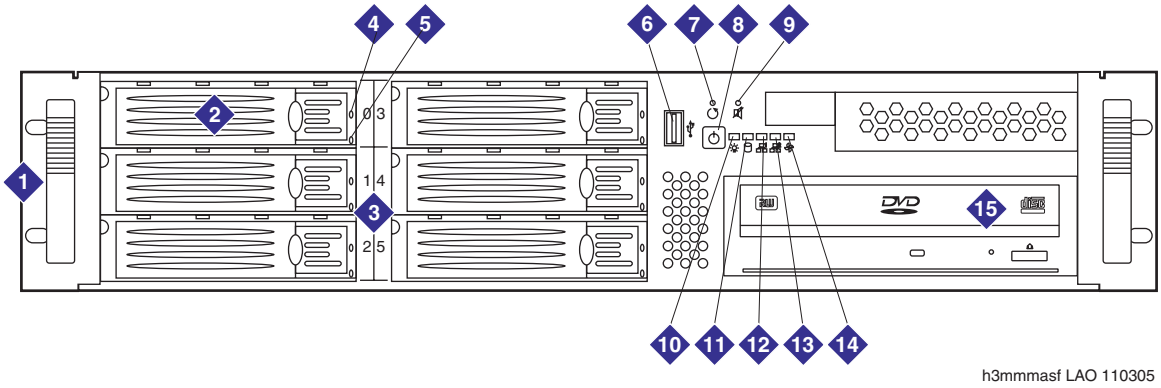

Figure notes:

1. **Chassis handles**
2. **Hard disk drive bays—the MAS uses only bay 3 on the upper-right**
3. **Label for disk drive bays 0 through 5**
4. **Disk drive presence indicator—not used on the MAS**
5. **Disk drive activity indicator—not used on the MAS**
6. **USB port**
7. **System reset switch**
8. **System power on/off button**
9. **Audible alarm reset switch for power supply—not used on the MAS**
10. **System power indicator**
11. **Disk drive access indicator**
12. **Corporate LAN indicator—always on when corporate LAN cable is connected**
13. **Private LAN indicator—not used in this configuration**
14. **Power supply failure indicator—not used on the MAS**
15. **DVD player**

Figure 2 shows the back view of an Avaya Messaging Application Server (Avaya MAS).

Figure 2: S3500-family MAS—back view

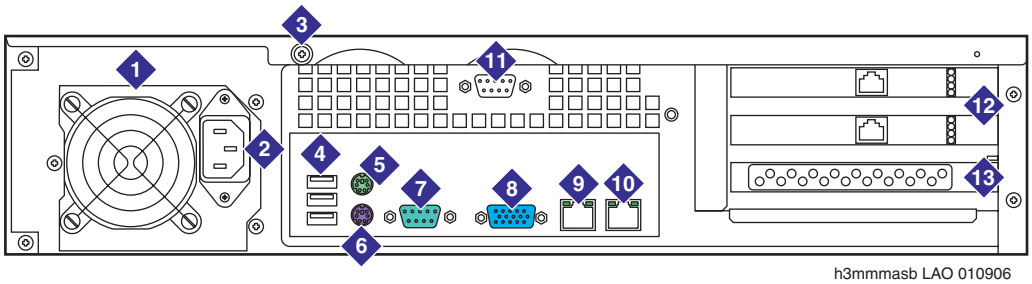

Figure notes:

1. **Power supply**
2. **AC power receptacle**
3. **Screw for top cover**
4. **USB ports—one is used for the required modem on the MAS**
5. **Mouse connector**
6. **Keyboard connector**
7. **Serial port (COM1)—Used for serial PBX integration**
8. **Video connector**
9. **Corporate LAN interface**
10. **Private LAN interface**
11. **Serial port (COM2)—not used on the MAS**
12. **Port boards—type varies. Port boards are *not* present for IP H.323 or IP SIP integrations.**

    Up to two (2) port boards can be installed in an MAS as needed. The middle PCI slot is filled first, if the MAS has only one port board. For more information, see Supported MAS port boards on page 44.
13. **Extra PCI card slot—not used on the MAS**

Unpacking the system hardware

This section lists required and optional hardware needed to install an Avaya Modular Messaging system that uses S3500-family server hardware.

Note:

Label each component as you identify it, particularly on a system that has multiple MAS-like units. For more information, see Identifying Modular Messaging servers on page 14.

Required and optional hardware

Table 6 lists required and optional hardware needed to set up an Avaya Modular Messaging system. Verify that all components needed for this installation are on site.

Table 6: Required and optional Avaya MAS hardware

Item	Quantity	Required/optional
Required equipment:		
Avaya Messaging Application Server (Avaya MAS)	1 minimum, 10 maximum	Required
Additional MAS-like units, called *supplementary* servers—might be Avaya-provided hardware or customer-provided equipment (CPE)	Varies	Optional—can be customer-provided
Server AC power cables	1 per Avaya server	Required
Front bezel	1 per server	Required
Rack-mount assembly including rails, slides, and connecting hardware, *and* rubber spacers for stackable desktop configuration	1 set of each per server—use mount type required	Required
Ethernet LAN cable	1 per server	Required
USB modem—includes USB cable	1 per server	Required
Port board cables, if port boards are present—see Table 7: Supported MAS port boards—S3500-family servers on page 20. IP H.323 or IP SIP switch integrations do *not* use port boards.	1 set per port board	Required to connect port boards—type varies

Table 6: Required and optional Avaya MAS hardware

Item	Quantity	Required/optional
Optional or customer-provided equipment:		
Monitor—includes power cord and VGA cable	1	Optional—can be customer-provided
Keyboard and mouse—includes cords and Y cable	1 set	Optional—can be customer-provided
2-port KVM switch for two-server system	1 KVM switch with attached cables	Optional—used for a two-server system
8-port KVM switch for multiple-server system—includes 1 power transformer, 1 KVM switch cable for each server, and 1 set of rack-mount brackets for rack-mount configuration	1 KVM switch, 1 cable per server, 1 power transformer, 1 set mounting brackets if needed	Optional—other models of switching devices can be used
Uninterruptible power supply (UPS) with required power cord—includes 1 set of rack-mount brackets *and* rubber spacers for a stackable desktop configuration	1	Required—model can vary
Extended battery module (EBM) with required power cord—includes 1 set of rack-mount brackets *and* rubber spacers for a stackable desktop configuration	1 to 4	Optional—can be ordered with the UPS

Identifying MAS port boards

Table 7: Supported MAS port boards—S3500-family servers on page 20 lists the Dialogic port boards that S3500-family servers support. The type of port boards used varies depending on the switch integration, but each MAS can have only one type of port board installed.

For new systems, the appropriate port boards, if required, are preinstalled in an Avaya MAS. Inspect each MAS-like unit to determine if port boards are present:

- If port boards are present, identify this unit as an MAS. You must connect the external cables for the port boards as part of server installation.
- If port boards are not present, this unit might be a supplementary server, or it might be an MAS that uses an IP H.323 or IP SIP switch integration. In either case, no external cables are needed. For more information, see Identifying Modular Messaging servers on page 14.

Table 7: Supported MAS port boards—S3500-family servers

Protocol	Ports per MAS	Supported port boards	Maximum number	Dialogic files on documentation media
Analog	12 - 24 4 - 8	Dialogic D/120JCT-LS 12-port board Dialogic D/41JCT-LS 4-port board	2	**D/120JCT-LS** (PDF) **D/41JCT-LS** (PDF)
Digital Set Emulation	8 - 16	Dialogic D/82JCT-U-PCI-UNIV	2	**D/82JCT-U PCI Univ** (PDF)
E1-QSIG	30 - 60	Dialogic D/600JCT-1E1	2	**D/600JCT-1E1** (PDF)
T1-QSIG	23 - 46	Dialogic D/480JCT-1T1	2	**D/480JCT-1T1** (PDF)

The Dialogic documents provide details about installing and connecting the port boards. The documents are available on the *Avaya Modular Messaging Documentation* media or from the www.avaya.com/support Web site. For instructions on how to obtain Avaya documents, see Required documentation and software on page 1. For the latest version of the Dialogic guides, see the Quick Install Cards Search Tool on the Intel Telecom Boards Web site.

Note:

The Dialogic documentation describes more setups than the ones used for Avaya Modular Messaging. If information in a Dialogic document conflicts with this Avaya document, follow the steps in the Avaya documentation. Use the Dialogic documentation to locate various items on the board or verify cable connections.

Saving the packing materials

Save the shipping cartons and all packing materials in case any hardware must be returned to the manufacturer. If you ordered more than one Avaya MAS, saving one carton and one set of packing materials is sufficient.

Packing materials include:

- Antistatic bags
- Cardboard and foam inlays

Note:

The packing materials might include a plastic bag designed to protect the system from moisture during shipment. Discard this bag. It is not reusable.

Also save the shipping cartons for all peripheral devices. Devices include the monitor, keyboard and mouse, all required modems, uninterruptible power system (UPS), and one or more optional extended battery modules (EBMs).

Installing S3500-family servers

This section describes how to install system components for Avaya S3500-family message server hardware. Optional components are noted in the text. For more information about required and optional system components, see Table 6: Required and optional Avaya MAS hardware on page 18.

CAUTION:

Because an Avaya Modular Messaging installation requires many steps, use the new system installation checklist. See Appendix B: Installation and upgrade checklists on page 231. Check off items as you complete them to track your progress.

Note:

This chapter describes only how to connect new S3500-family server hardware. For information about connecting or replacing S3400-family hardware, see *Avaya Modular Messaging S3400-Family Hardware Maintenance and Additions* on the documentation media.

Sample installed system

The Modular Messaging hardware can be installed in the following configurations:

- Inside one or more customer-provided commercial cabinets. This setup is called a rack-mount configuration.
- Without a commercial cabinet. This setup is called in a stackable desktop configuration.

This section includes instructions about installing both rack-mount and stackable desktop configurations.

Figure 3: Example of a rack-mount system with S3500-family servers—front view on page 22 shows an example of an installed rack-mount configuration.

Note:

The sample figure shows the Avaya MAS S3500-family servers with their front bezels removed.

Figure 3: Example of a rack-mount system with S3500-family servers—front view

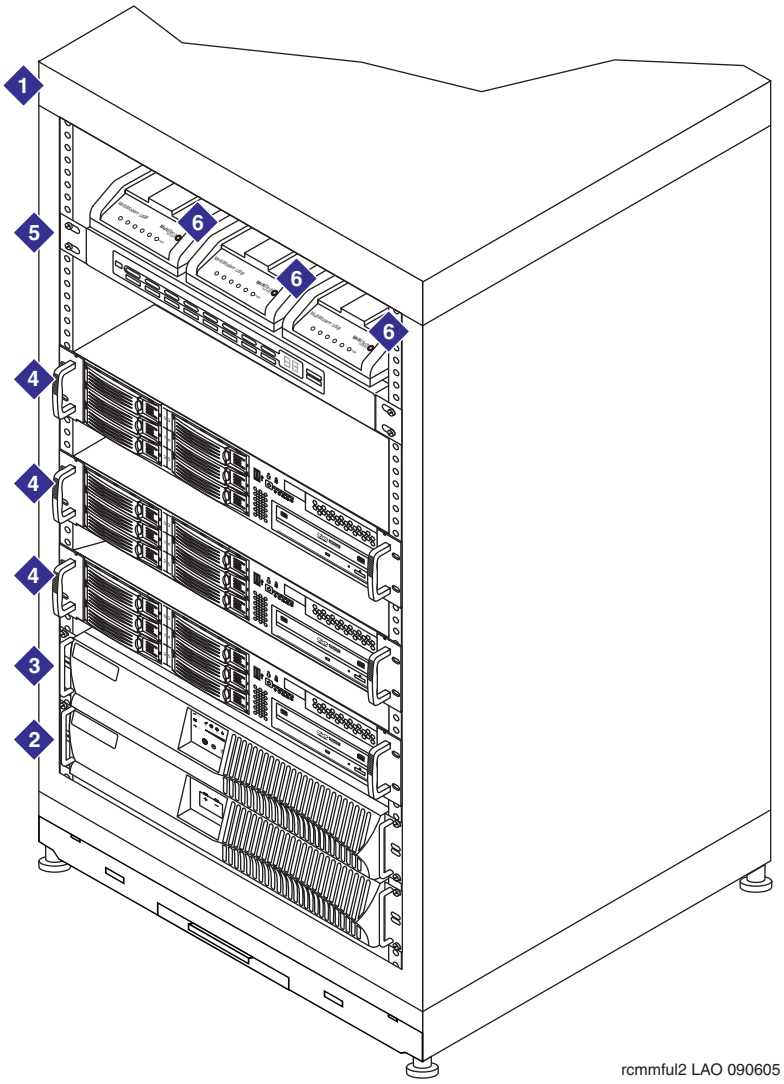

Figure notes:

1. **Customer-provided cabinet. Type can vary. For more information, see physical requirements in Installation area requirements on page 11.**
2. **EBM—optional. 0 to 4 can be installed with a UPS.**
3. **UPS—required. Model can vary.**
4. **Avaya Messaging Application Server (Avaya MAS). Up to 10 MASs can be present. Additional supplementary servers might also be present (not shown).**
5. **KVM switch—optional. Model can vary.**
6. **External modem. One is required for each Avaya MAS.**

Installing the UPS and optional EBMs

This section describes how to install an uninterruptible power system (UPS) and one or more optional extended battery modules (EBMs).

Note:

Customers might order a different model of UPS than the one described in this section, or they can supply their own. For more information, see the documentation provided with the UPS.

- The UPS is a required component for all Avaya Modular Messaging systems. The UPS protects the system from most common power problems, including power failures, power sags, and power surges.
- The EBM is an optional component that works in conjunction with the UPS to add additional run time for the system. The customer can add up to four EBMs per UPS. For more information, see the documentation provided with the EBM and UPS.

To install the UPS and EBMs:

- For a rack-mount configuration, see Installing the UPS and any EBMs into a rack on page 23.
- For a stackable desktop configuration, see Installing the UPS and any EBMs as a stackable configuration on page 25.

Installing the UPS and any EBMs into a rack

In a rack-mount configuration, the UPS and EBMs must be positioned in the rack below the Avaya Modular Messaging servers. Install the EBM units in the lowest-available position.

To install the UPS and EBMs into a rack:

1. Gather the necessary rack-mount hardware, including the mounting handles, brackets, and screws.
2. Place the UPS on a flat, stable surface with the front of the UPS towards you.
3. Attach the mounting handle to each bracket using the supplied screws. See Item 1 in Figure 4.
4. Align the mounting brackets with the screw holes on the side of the UPS and secure using the supplied screws. See Item 2 in Figure 4.
5. If you are installing one or more EBMs, repeat Steps 1 through 4 for each EBM.

   Note:

   You must install any EBMs below the UPS.

Figure 4: Attaching mounting handles and bracket for a rack-mount UPS

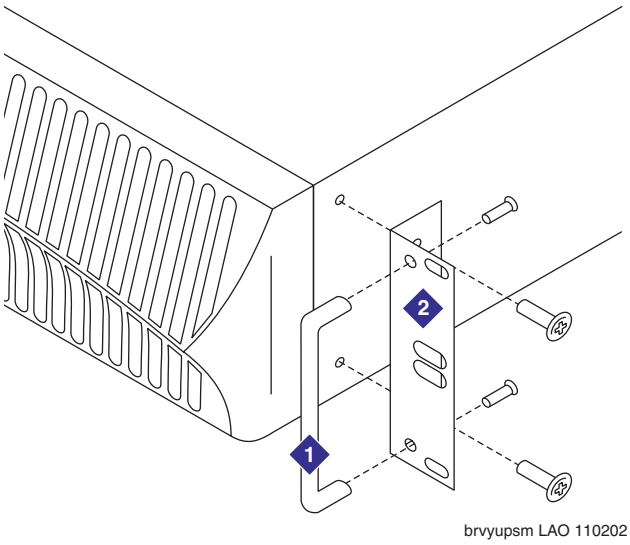

6. Place the EBM into the rack in the lowest-available position. Attach the EBM to the rack using customer-provided screws.

   Note:

   If you must install additional EBMs into the rack, install them above the first installed EBM.

7. Place the UPS into the rack in the lowest-available position above any EBMs. Attach the UPS to the rack using customer-provided screws.
8. Continue with Connecting any EBMs to the UPS on page 26.

Installing the UPS and any EBMs as a stackable configuration

To configure the UPS and any EBMs in a stackable configuration:

1. If you are installing one or more EBMs:
   a. Remove the adjacent corner screws from the rear panels, as shown in Figure 5.
   b. Install the EBM brackets by aligning each bracket with the screw holes. Secure the bracket using the supplied screws.
   c. Repeat Step 1 for each additional EBM, if present.

   Note:

   If you do not have any EBM units, continue with Step 2.

Figure 5: Attaching connecting brackets between a UPS and EBM—back view

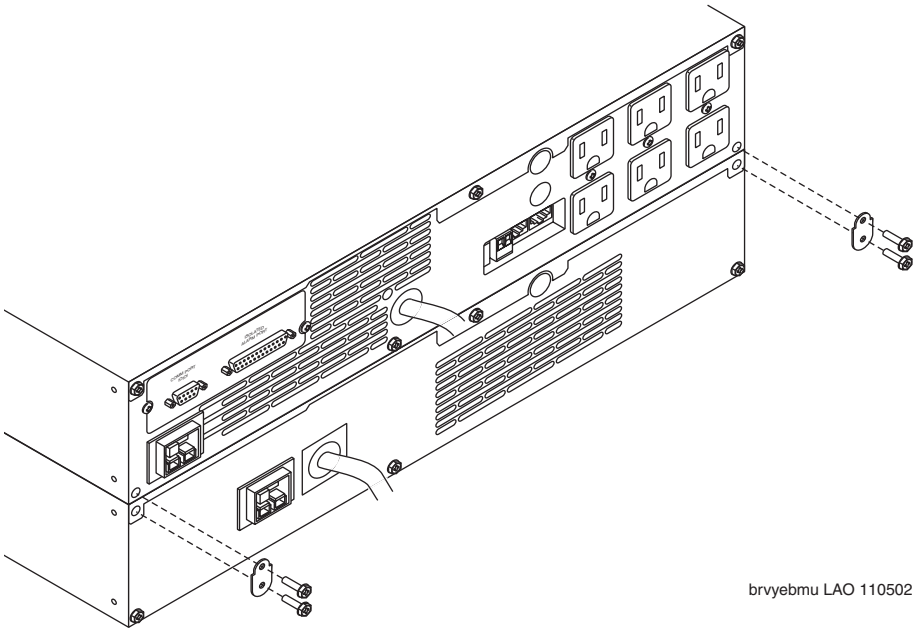

2. On the bottom unit, either the UPS or an optional EBM, secure four rubber spacers to the bottom of the unit, one at each corner.
3. Set the unit on a stable platform. This unit is the base of the stackable desktop configuration.

Connecting any EBMs to the UPS

To connect any EBM units to the UPS:

1. Connect the EBM cable to the battery connector on the UPS. See Item 3 in Figure 6.
2. To connect additional EBMs, plug the EBM cable of the second EBM into the battery connector on the first EBM. See Item 4 in Figure 6.
3. Repeat Step 2 for each additional EBM. Up to four EBMs can be present.

Figure 6: Connecting a UPS and an EBM—back view

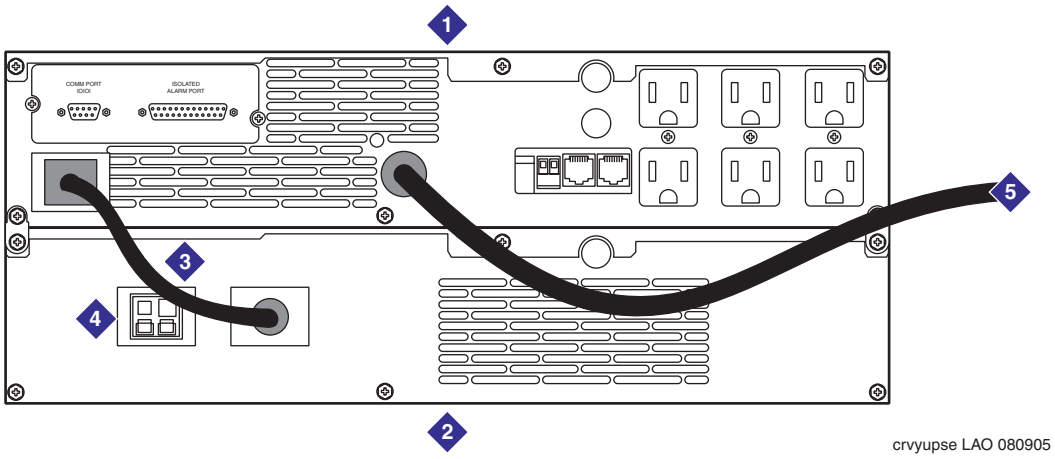

Figure notes:

1. **UPS. Model can vary. For more information, see the documentation provided with the UPS.**
2. **EBM—optional. 0 to 4 can be installed.**
3. **EBM battery cable to UPS.**
4. **Battery connectors for additional EBMs if needed—optional.**
5. **UPS power cable to a grounded AC power source—Do not connect yet.**

Installing the S3500-family servers

This section describes how to install each Avaya S3500-family message server in a customer-provided commercial cabinet or in a stackable desktop configuration.

Attaching the front bezel

The front bezel ships loose to prevent damage during shipment. The bezel curves inward slightly to fit snugly to the chassis. You must bend the bezel slightly outwards to attach it.

Note:

The bezel covers the front USB port on the server. If you want to use this port for the USB storage device, attach the bezel at the end of the installation.

To attach the front bezel to each S3500-family server:

1. Hook one end of the bezel into the notch near the chassis handle. See Figure 7.
2. Bend the middle of the bezel slightly outwards, and push the other end into place.

Figure 7: Attaching the front bezel on an S3500-family server

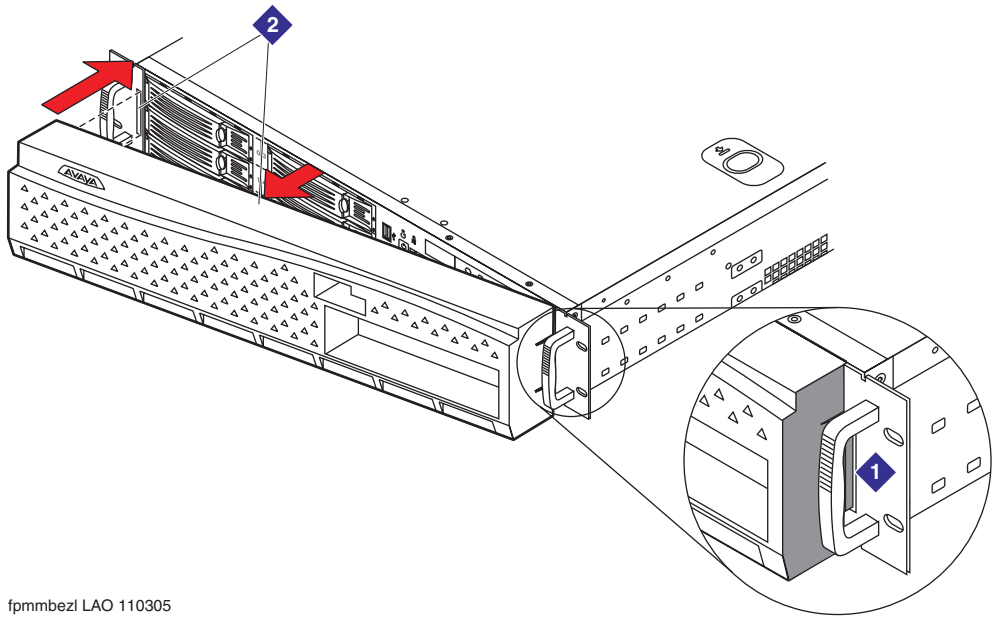

Installing S3500-family servers in a rack-mount or stackable setup

You can install S3500-family servers in a commercial cabinet in a rack-mount configuration. Alternatively, you can stack servers on top of each other in a desktop configuration. Continue with the appropriate section based on the installation method to be used at this site:

- Installing servers in a rack-mount configuration on page 28
- Installing servers in a stackable desktop configuration on page 30

CAUTION:

The Avaya Modular Messaging servers are heavy. Get another person to assist you with lifting the servers into place.

Installing servers in a rack-mount configuration

The task describes how to install one or more Avaya S3500-family message servers inside a commercial cabinet. This setup is called a *rack-mount configuration*.

The S3500-family servers fit into a standard 19-inch (48 cm) cabinet.

Note:

The first MAS is usually installed directly above the UPS. If more than one MAS is present, you usually install each additional MAS above the first MAS. However, all the servers in the system do not have to be in the same cabinet.

To install an S3500-family server into a rack:

1. Remove the rail assembly and screws from their packaging.

   Note:

   If more than one set of screws is provided, identify the set of 12 screws that fits the S3500-family server hardware. Only one set of thick Phillips round head screws fits tightly to the rails. Any other screws are not needed.

2. Release and detach the inner rail from the slide:
   a. Fully extend the rail.
   b. Pull the release lock out, the rear arrow tab, forward. See Item 1 in Figure 8: Attaching a rack-mount rail assembly on an S3500-family server on page 29.
   c. Separate the inner rail from the slide.
3. Attach the inner rail to the server:
   a. Place the S3500-family server on a flat, stable surface.
   b. Align the inner rail against the side of the server.

   Note:

   Only four holes in the rail line up with corresponding holes in the server chassis.

c. Starting with the hole nearest the front of the server, insert a screw into each of the four holes. Because the first hole is not a slot, starting with this hole makes the rail easier to attach. See Item 2 in Figure 8.

4. Attach the slide to the frame of the customer-provided cabinet:

a. Loosen the two Phillips screws inside the front bracket. Extend the bracket to fit the frame. See Item 3 in Figure 8.

b. Secure the bracket to the front and rear posts in the customer-provided cabinet. Tighten all four screws. See Items 4 and 5 in Figure 8.

c. After the bracket is in place, tighten the two screws inside each rear bracket. See Item 5 in Figure 8.

Figure 8: Attaching a rack-mount rail assembly on an S3500-family server

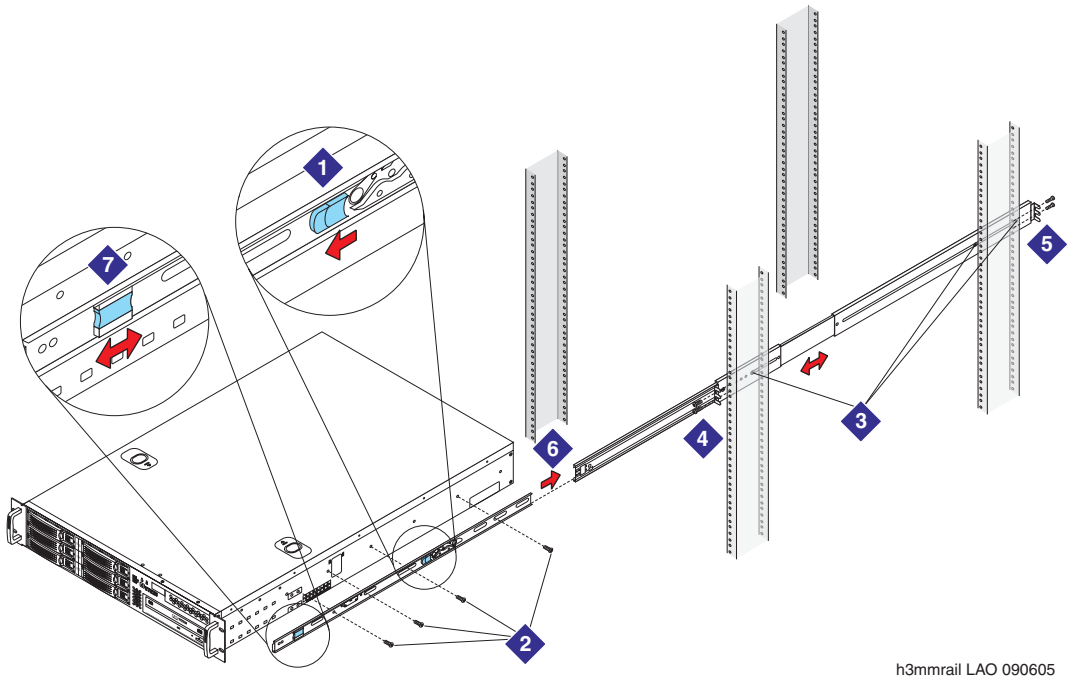

CAUTION:

You need two people for the next step.

5. Mount the server in the cabinet:

a. Fully extend the slide out the front of the cabinet. See Item 6 in Figure 8.

b. Have one person hold up the front of the server. Have a second person help support the server, and guide the server onto the slide.

c. Push in the release lock, the front latch, to slide the server into the cabinet. See Item 7 in Figure 8.

6. Repeat Steps 1 through 5 for each server that must be installed.
7. When all servers are mounted, continue with Connecting the system power cables on page 31.

Installing servers in a stackable desktop configuration

For a stackable desktop configuration, install four rubber spacers on the bottom on each of the servers. The spacers enable you to stack the servers on top of one another.

CAUTION:
For safety, do not stack more than two Avaya servers on top of each other. Create multiple stacks if needed.

For a sample desktop configuration, see Figure 9.

Figure 9: Attaching rubber spacers for a stackable desktop configuration

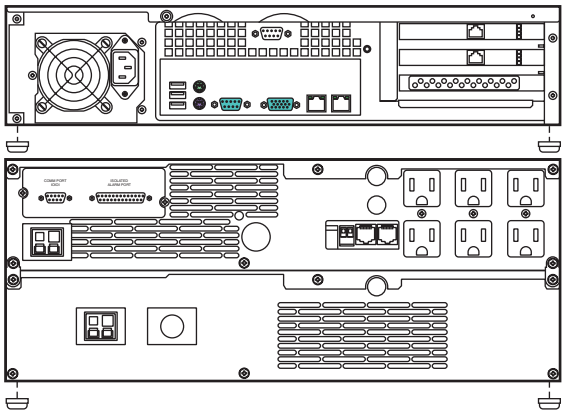

prmmfet2 LAO 010906

To install the servers in a stackable desktop configuration:

1. Gather the rubber spacers shipped with each server.
2. Attach the rubber spacers to the bottom of each of the servers, one at each corner. For an example, see Figure 9.
3. Position the UPS, and its attached EBMs if present, in an appropriate location. For more information about placement, see Site requirements for Avaya message servers on page 10.

Note:

If you have a UPS *and* an EBM, stack only one server on top of them. *Never* stack servers more than two high.

4. Place the first MAS on top of the UPS.
5. .If more MASs or supplementary servers are present, create another stack, placing each additional server on top of the last one. Create as many stacks as needed, so there are never more than two servers in one stack.

Connecting the system power cables

Attach the power connections on the back of each server.

To connect the power cables for the Modular Messaging system:

1. Connect the female end of the server power cable to the male power connector on the back of the S3500-family server.
2. Connect the male end of the server power cable to an AC receptacle located on the back of the UPS. For a sample configuration, see Figure 10: Attaching power cables to a UPS—sample configuration on page 32.
3. *If you have more than one server,* repeat Steps 1 and 2 for each MAS.
4. After all equipment is connected, plug the UPS power cable into an appropriate AC power outlet.

Figure 10: Attaching power cables to a UPS—sample configuration

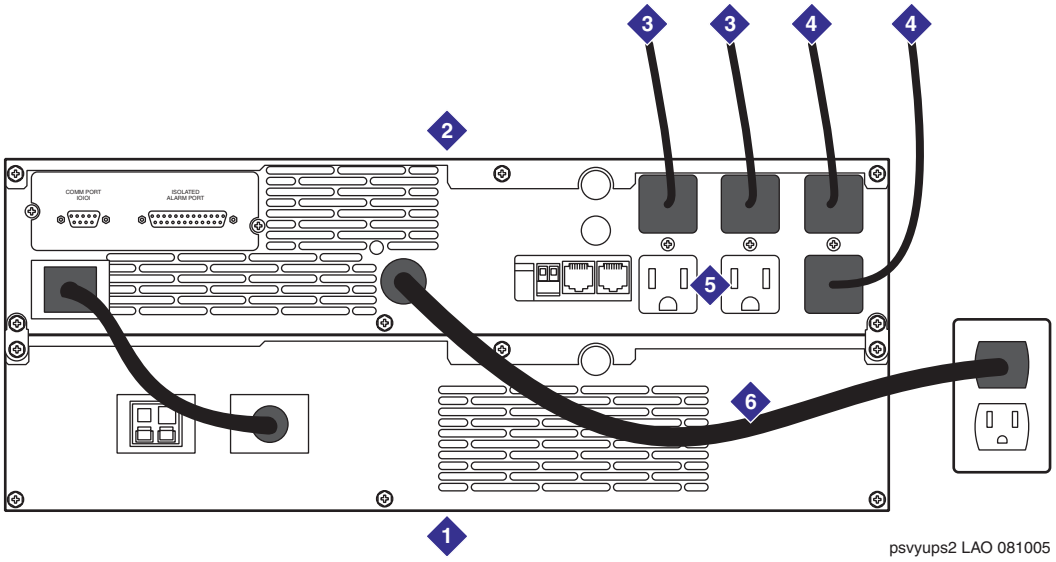

Figure notes:

1. **EBM—optional. 0 to 4 can be installed.**
2. **UPS. Model can vary. For more information, see the documentation provided with the UPS.**
3. **AC power cable to each MAS or the supplementary server, if present.**
4. **AC power cable to other equipment, such as the required external modem for each MAS.**
5. **Additional AC sockets. Use as needed for external modems, monitor, optional 8-port KVM switch, or any additional servers.**
6. **UPS power cable to a grounded AC power outlet. Plug in this cable last.**

Connecting the MAS port boards, if present

Do this task only if port boards are present in the Avaya MAS.

Connect any MAS port boards to the PBX (switch). For more information about Dialogic port boards, see Identifying MAS port boards on page 19.

Note:

If this MAS uses an IP H.323 or IP SIP switch integration, no port boards are present. Continue with Connecting the Ethernet cable on page 34.

To connect the MAS port boards to the switch:

1. Assemble the required cables.

   Note:

   Port boards ordered through Avaya ship with the correct cables.

2. Connect each port on the port boards to the switch (PBX) as required.

   Note:

   Check the numbering on the port board faceplate to verify that you are connecting the correct cord to the correct port.

- **For E1-QSIG or T1-QSIG boards:**
  a. Connect the port on the Dialogic T1-QSIG or E1-QSIG board using an RJ-48C Ethernet cable.
  b. The other end of the cable must be connected to the QSIG board on the corporate switching system. The organization responsible for maintaining the corporate switch must make this connection. See the customer contract or the statement of work.
- **For set emulation boards:**
  a. Connect each port on the Dialogic set emulation (DSE) board using the D/82U cable (Intel part number 86-0155-001).
  b. The other end of the cable must be connected to a 4-wire punch-down block on the corporate switching system. The organization responsible for maintaining the corporate switch must make this connection. See the customer contract or the statement of work.
- **For analog boards:**
  a. Connect each port on the installed analog boards to one end of a standard RJ-11 tip/ring cord. You can also use individual tip/ring cables and a 12-port harmonica. Note which cables connect to which ports.
  b. The other end of the cable must be connected to an analog line on the corporate switching system. The organization responsible for maintaining the corporate switch must make this connection. See the customer contract or the statement of work.

Connecting the Ethernet cable

A standard Ethernet cable ships with each Avaya S3500-family message server. You can use this cable or a customer-provided cable to connect each server to the corporate LAN.

To connect each server to the corporate LAN:

1. Connect one end of the Ethernet cable to the appropriate RJ45 connector on the back of the server. See Figure 11.

   Note:

   Verify that you connect the Ethernet cable for the corporate LAN to the correct Ethernet interface on the back of the server. The two Ethernet interfaces on an S3500-family server operate at different speeds. Use the interface with the highest speed to connect to the corporate LAN.

2. Connect the other end of the Ethernet cable to the corporate LAN.

   Note:

   The organization that is responsible for maintaining the corporate LAN must make this connection. See the customer contract or the statement of work.

3. Repeat Steps 1 and 2 for each Avaya MAS and supplementary server in the system.

Figure 11: Connecting an S3500-family MAS to the corporate LAN—back view

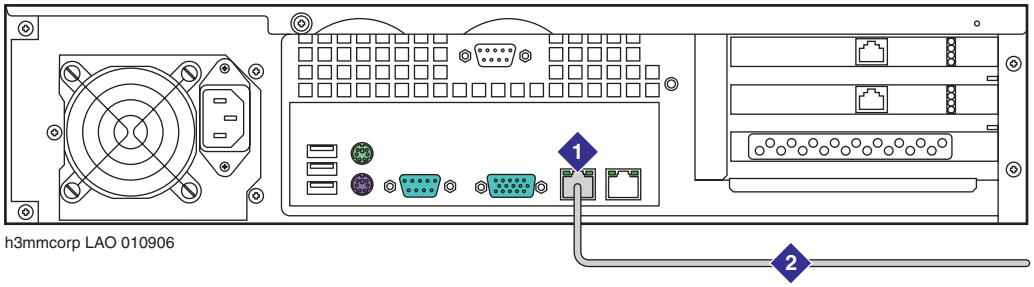

Figure notes:

1. **Ethernet interface for the corporate LAN**
2. **Cable to the corporate LAN**

Installing a KVM switch

You use a keyboard, video, and mouse (KVM) switch to view the different servers in a Modular Messaging system. However, the model of KVM switch and the specific monitor, keyboard, and mouse used can vary from site to site. For example, some sites might use a flat-panel monitor setup instead.

This section describes how to install two Avaya-provided KVM switches:

- Installing an 8-port KVM switch on page 35
- Installing a 2-port KVM switch on page 39

Note:

If this site uses any other model of KVM switch, install it using the instructions shipped with the equipment. After the KVM switch installation is complete, continue with Connecting the USB modem on the MAS on page 41.

Installing an 8-port KVM switch

If this system has more than two servers, you can install an 8-port Belkin KVM switch. For a sample multiple-server installation that uses this KVM switch, see Figure 3: Example of a rack-mount system with S3500-family servers—front view on page 22.

You can install the Belkin 8-port KVM switch in two configurations:

- For a stackable desktop configuration:
  a. Place the KVM switch on top of the uppermost MAS, or on any convenient surface nearby. Rubber spacers are already in place.
  b. Continue with Connecting the KVM cables on page 36.
- For a rack-mount configuration, continue with Installing the KVM switch in a rack-mount configuration on page 35.

Installing the KVM switch in a rack-mount configuration

To install the 8-port Belkin KVM switch in a commercial cabinet:

1. Gather the necessary rack-mount hardware, including the adjustable mounting brackets and screws.
2. Select a bracket-hole scheme to determine how far the KVM switch must protrude from the rack.
3. Install the two rack-mount brackets on the KVM switch using the provided screws. See Figure 12: Attaching mounting brackets for a rack-mount KVM switch on page 36.

4. Install the KVM switch into the rack above the last installed MAS.

Figure 12: Attaching mounting brackets for a rack-mount KVM switch

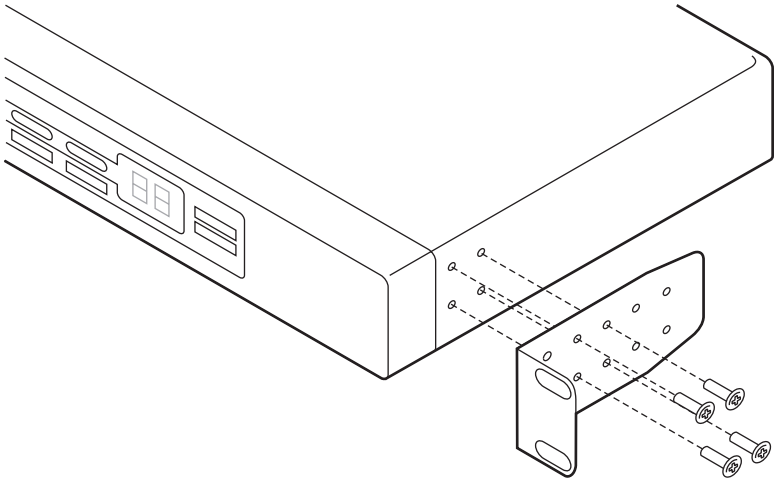

Connecting the KVM cables

You must connect the 8-port Belkin KVM switch to the keyboard, monitor, and mouse. You then connect the KVM switch to each server, as described in this section.

Note:

The KVM switch setup for the keyboard, monitor, and mouse can vary from site to site, depending on the equipment and cables used. For more information, see the documentation for the monitor, keyboard, and mouse.

To connect a Belkin 8-port KVM switch:

1. If a new monitor, keyboard, or mouse was ordered for this system, unpack the equipment now. Otherwise, continue with Step 2.

   Note:

   You can use any 15-inch or larger monitor for a Modular Messaging system.

   a. Set up the monitor in the desired location.

   b. Connect the keyboard and mouse to the monitor. This setup can vary.

   c. Plug the female end of the monitor power cable into the monitor.

   d. Plug the male end of the monitor power cable into a free UPS receptacle if available, or into a grounded AC outlet.

2. Connect the VGA cable from the monitor to the female port on the back of the KVM switch labeled **Console VGA**. See Item 1 in Figure 13: Connecting an 8-port Belkin KVM switch to an MAS—back view on page 38.
3. Tighten the thumbscrews on the video cable connector using your fingers or a small flat-blade screwdriver.
4. Connect the PS/2 cables for the mouse and keyboard to their corresponding connectors using the Y cable. Use the connectors in the **Console** section on the back of the KVM switch. See Item 2 in Figure 13.

   Note:

   The mouse connector is color-coded green, and the keyboard connector is color-coded purple.
5. Connect the KVM switch power source:
   a. Attach the KVM power cable to the DC power jack labeled **DC 12V, 1A** on the rear of the KVM switch. See Item 4 in Figure 13.
   b. The other end of the KVM power cable is an AC-to-DC transformer. Connect the transformer to a receptacle on the back of the UPS, or to an appropriate AC power outlet.

   When power is connected, the LED for port 01 starts flashing.
6. Push the direct-access port selectors for ports 01 through 08 in order.

   The corresponding LED flashes as each button is pressed, indicating that the port is ready for the server connection.
7. Connect the KVM switch cable to all installed servers:
   a. Connect the KVM switch cable to the appropriate port on the back of the KVM switch. For the first MAS, use the port labeled **VGA 01**. See Item 5 in Figure 13.
   b. Connect the PS/2 keyboard and mouse connectors of the KVM cable to the keyboard and mouse ports on the MAS. See Item 6 in Figure 13.

   Note:

   The mouse connector is color-coded green, and the keyboard connector is color-coded purple.

   c. Plug the male VGA connector on the KVM switch cable into the VGA port on the first MAS. See Item 7 in Figure 13.
8. For a multiple-MAS system, repeat Step 7 for each MAS or supplementary server. Connect the servers to port **VGA 02**, **VGA 03** and so on, as needed.
9. Continue with Connecting the USB modem on the MAS on page 41.

Figure 13: Connecting an 8-port Belkin KVM switch to an MAS—back view

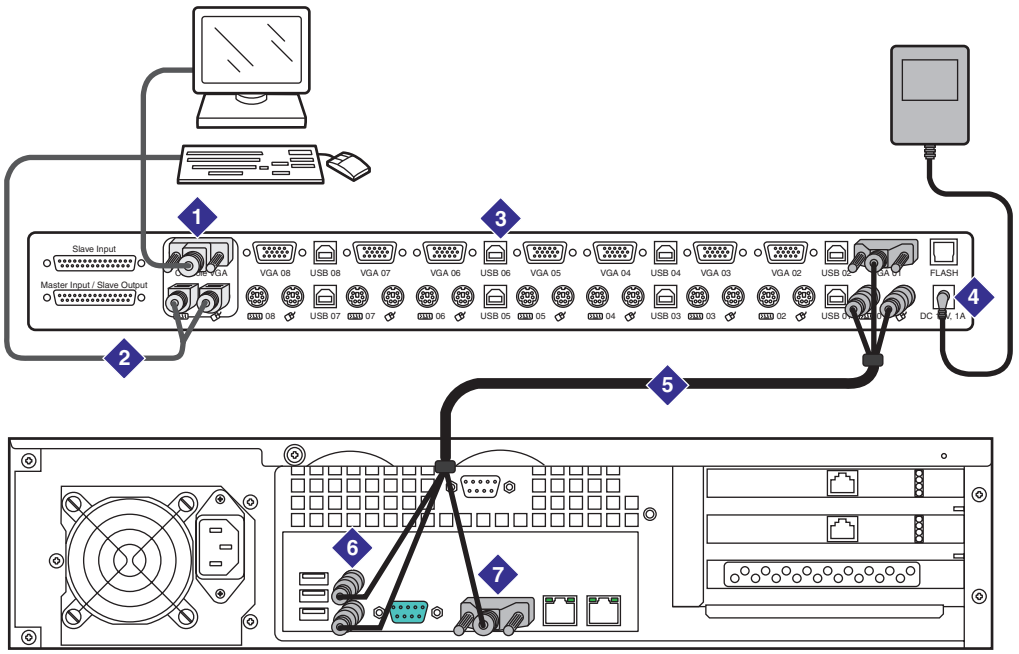

cammkvm2 LAO 010906

Figure notes:

1. **VGA cord from monitor to Console VGA port on KVM switch.**
2. **Y cable to combination keyboard and mouse for the monitor. Setup can vary.**
3. **8-port Belkin KVM switch.**
4. **DC power jack for transformer cable.**
5. **Video/keyboard/mouse cable to the server. Connect the first MAS to the first computer port VGA 01 as shown. Connect any additional servers to the subsequent port positions, starting with VGA 02.**
6. **Keyboard and mouse connectors on server.**
7. **Video connector on the server.**

Installing a 2-port KVM switch

If this system has only two servers, you can use a 2-port Belkin KVM switch.

Note:

The KVM switch setup for the keyboard, monitor, and mouse vary from site to site, depending on the equipment and cables used. For more information, see the documentation for the monitor, keyboard, and mouse.

To install a 2-port Belkin KVM switch:

1. If a new monitor, keyboard, or mouse was ordered for this system, unpack the equipment now. Otherwise, continue with Step 2.

   Note:

   You can use any 15-inch or larger monitor for a Modular Messaging system.

   a. Set up the monitor in the desired location.

   b. Connect the keyboard and mouse to the monitor.

   c. Plug the female end of the monitor power cable into the monitor.

   d. Plug the male end of the monitor power cable into a free UPS receptacle if available, or into a grounded AC outlet.

2. Connect the VGA cable from the monitor to the female port on the 2-port KVM switch. See Item 1 in Figure 14: Connecting two S3500-family MASs using a 2-port KVM switch—back view on page 40.

3. Tighten the thumbscrews on the video cable connector.

4. Using the Y cable, connect the PS/2 cables for the mouse and keyboard to their corresponding connectors on the 2-port KVM switch. See Item 2 in Figure 14.

   Note:

   The mouse connector is color-coded green, and the keyboard connector is color-coded purple.

5. Run one strand of the KVM cable to the first server. The order in which you connect the KVM cables to the servers is not important. See Item 4 in Figure 14.

6. Plug the VGA connector into the VGA port on the server. Tighten the thumbscrews on the video cable connector. See Item 5 in Figure 14.

7. Connect the PS/2 keyboard and mouse connectors on the KVM cable to the keyboard and mouse ports on the back of the server. See Item 6 in Figure 14.

8. Repeat Steps 5 through 7 for the second server.

Figure 14: Connecting two S3500-family MASs using a 2-port KVM switch—back view

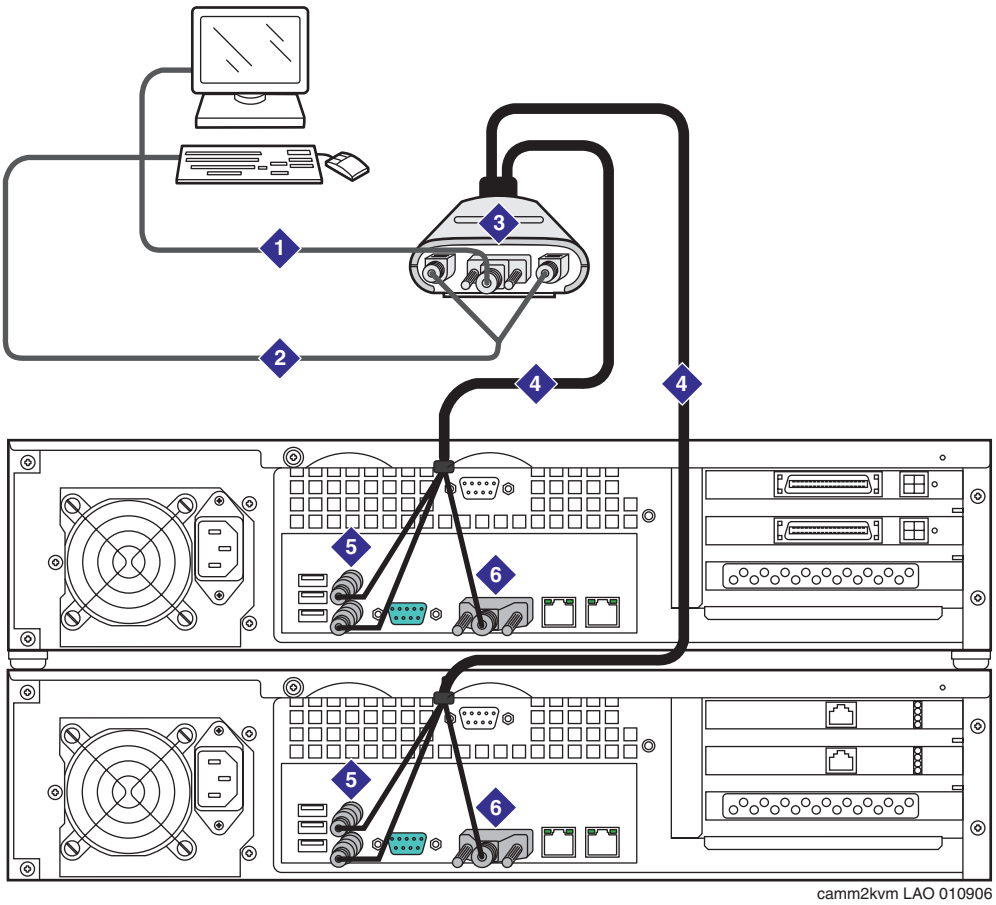

Figure notes:

1. **VGA cord from monitor to video connector on KVM switch**
2. **Y cable to combination keyboard and mouse for the monitor**
3. **2-port Belkin KVM switch**
4. **Video/keyboard/mouse cable to each server**
5. **Keyboard and mouse connectors on the server**
6. **Video connector on the server**

Connecting the USB modem on the MAS

A USB modem is required for each Avaya MAS. The type of modem varies, depending on the installation location. For more information about modem installation, setup, or operation, see the documentation provided with the modem.

This section describes a MultiTech USB modem setup. For an example, see Figure 15.

To connect a USB modem:

1. Attach the rubber spacers to the four marked areas in each corner on the bottom of the modem, if spacers are not already in place.
2. Place the USB modem on top of the KVM switch or in a secure location, as required.
3. Connect one end of the USB cable to the back of the USB modem.
4. Connect the other end of the USB cable to the back of the MAS.
5. Connect the RJ-11 cable to the LINE connector on the modem.
6. The other end of the cable must be connected to an analog line on the corporate switching system. The organization responsible for maintaining the corporate switch must make this connection. See the customer contract or the statement of work.
7. Repeat Steps 1 through 6 for each Avaya MAS modem.

Figure 15: Connecting a USB modem to an S3500-family MAS—back view

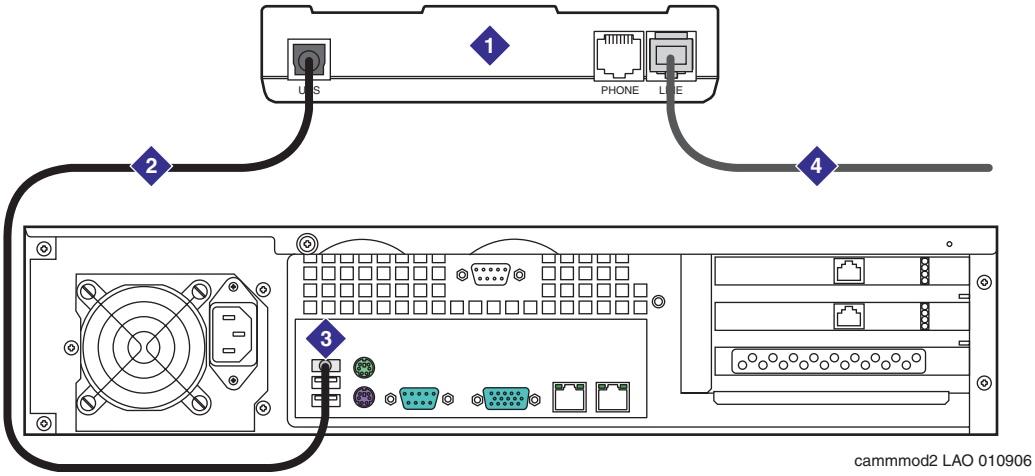

Figure notes:

1. **USB modem**
2. **USB cable to the MAS**
3. **USB connector on the server**
4. **RJ-11 cable to the corporate switch**

Turning on an S3500-family server system

After all hardware components are installed, turn on the Modular Messaging system:

1. Verify that the power cables for the servers and all peripheral devices are connected. Cables might go to the UPS or to an appropriate AC power outlet. For an example, see Figure 10: Attaching power cables to a UPS—sample configuration on page 32.
2. Press the **On** button on the front of the UPS. The appropriate lamps should light. For more information, see the UPS documentation.

   Note:

   Always turn on the UPS first.
3. Press the power button on the monitor.

   The power lamp on the monitor should light.
4. *For each external modem,* press the **On** button, if present. Verify that the appropriate lamps light. For more information, see the modem documentation.
5. Verify that the power lamp for the KVM switch is lit. The Belkin KVM switch does not have on/off buttons.
6. Verify that all Avaya S3500-family message servers are running.

   The LEDs on the front of the server flash once when power is applied. Afterwards, the LEDs light to indicate system power and drive activity. For more information about the different LEDs, see Figure 1: S3500-family server—front view with bezel removed on page 16.

   Note:

   The S3500-family servers start as soon as they receive AC power. You do not need to press the server power button unless the power LED on the front of a server is not lit.
7. To turn on an S3500-family server if needed:

   a. Press the power button on the front of the server.

   b. Verify that the LEDs on the front of the server flash once, and then show system activity.

   c. Wait up to 1 minute for the display to appear on the monitor.

   Note:

   The Avaya Modular Messaging Configuration Wizard runs automatically when you turn on an Avaya MAS. For more information, see Chapter 6: Configuring a new Avaya MAS on page 77. However, you must complete the steps in Chapter 4: Preparing to install Modular Messaging software on page 55 before you configure the Modular Messaging software on the Avaya MAS.

Chapter 3: Installing Dialogic port boards in a customer-provided MAS

This chapter describes how to install Dialogic port boards and their drivers in a customer-provided equipment (CPE) server, also called a customer-provided MAS. A customer might have several servers that support Avaya Modular Messaging software and services.

- A server that handles call-processing functions is called a *Messaging Application Server (MAS)*. An MAS can contain port boards, depending on the switch integration.
- A server that handles special services only, such as Tracing Server service, is called a *supplementary server*. A supplementary server never contains port boards.

CAUTION:

Use the procedures in this chapter *only* to install Dialogic port boards into a customer-provided equipment (CPE) server that is to handle calls.

Continue with Chapter 4: Preparing to install Modular Messaging software on page 55 if:

- you are using Avaya-provided hardware, or
- this Avaya Modular Messaging system is to use an IP H.323 or IP SIP integration. These IP switch integration methods do not use port boards.

CAUTION:

Avaya does not support Brooktrout port boards for Modular Messaging systems that run Release 3 software. Install only the currently supported Dialogic port boards in a CPE server.

Avaya recommends that you connect a modem to each server to support remote dial in.

Note:

Before you can do the tasks described in this section, you must verify that all preinstallation requirements were met. See Chapter 1: Preinstallation requirements on page 1.

Topics in this chapter include:

Supported MAS port boards

Table 8 lists the Dialogic port boards that Avaya supports for all new installations that use customer-provided equipment (CPE) servers. The type of port boards required depends on the switch integration, but each MAS can have only one type of port board installed. For example, all the boards in the server must be T1-QSIG or DSE.

Table 8: Supported MAS port boards for customer-provided servers

Protocol	Ports per MAS	Port boards	Maximum Number	Dialogic files on documentation media
Analog	12 - 48	Dialogic D/120JCT-LS 12-port board	4	**D/120JCT-LS** (PDF)
	4 - 16	Dialogic D/41JCT-LS 4-port board	4	**D/41JCT-LS** (PDF)
Digital Set Emulation	8 - 32	Dialogic D/82JCT-U-PCI-UNIV	4	**D/82JCT-U PCI Univ** (PDF)
E1-QSIG	30 - 60	Dialogic D/600JCT-1E1 [1]	2	**D/600JCT-1E1** (PDF)
T1-QSIG	23 - 46	Dialogic D/480JCT-1T1 [1]	2	**D/480JCT-1T1** (PDF)

1. Early D/600JCT-1E1 and D/480JCT-1T1 QSIG port boards have a plug in the unused connector on the faceplate. Dialogic D/600JCT-1E1 or D/480JCT-1T1 QSIG port boards that ship after mid-2005 have only a single connector. Both types of QSIG boards operate identically.

Note:

To support the capacities shown in Table 8, the minimum CPE server hardware specifications must match the specifications for the S3500-family MAS. For more information, see the *Avaya Modular Messaging Concepts and Planning Guide* (PDF 2 MB).

The Dialogic documents provide details about installing and connecting the port boards. The documents are available on the *Avaya Modular Messaging Documentation* media or from the www.avaya.com/support Web site. For instructions on how to obtain the documents, see Required documentation and software on page 1. For the latest version of the Dialogic guides, see the Quick Install Cards Search Tool on the Intel Telecom Boards Web site.

Note:

The Dialogic documentation describes more setups than the ones used for Avaya Modular Messaging. If information in a Dialogic document conflicts with this Avaya document, follow the steps in the Avaya documentation. Use the Dialogic documentation to locate various items on the board or verify cable connections.

Installing MAS port boards

Do this task only on a customer-provided server.

Before you can install the Modular Messaging software on a customer-provided equipment (CPE) server, you must first install any required port boards in each MAS.

Note:

The number of port boards you can install in a customer-provided MAS depends on the type of board and the number of PCI slots in the server. These instructions assume that up to six PCI slots are available in the server, and that board installation starts with the 6th PCI slot. Modify these instructions as appropriate for the server that you are using.

Preparing for the installation

To install Dialogic port boards in a customer-provided MAS:

1. Verify that this MAS meets the minimum requirements needed to support Modular Messaging software. For more information, see the *Avaya Modular Messaging Concepts and Planning Guide* (PDF).
2. Print out the appropriate Dialogic PDF file for more information. For a list of the Dialogic documents that support each type of board, see Table 8: Supported MAS port boards for customer-provided servers on page 44.
3. If the server is already in operation, you must take it out of service to install the port boards. Schedule and publicize a time.
4. When you are ready to start the installation, shut down the system software and turn off the server. Unplug the AC power cord for safety.

   CAUTION:

   Electrostatic discharge can severely damage sensitive electronic circuits. Before handling any electronic hardware, be sure to wear a grounding wrist strap or other static-dissipating device. The antistatic wrist strap must touch your bare skin and the strap cable must connect to an earth ground. For complete ESD instructions, see "Protecting against ESD damage" on the documentation media.
5. Open the chassis to access the PCI card slots.
6. Remove the cover for the PCI slot in which you want to install the new board. Set the retaining screw aside.
   - If you are installing multiple boards, remove as many card slot covers as are needed.
   - Note the maximum number of boards of a certain type that you can install in one MAS. See Table 8: Supported MAS port boards for customer-provided servers on page 44.

Note:

When you insert boards, start from the right-most slot if possible. For example, if six PCI slots are in the server, start with PCI slot 6 to insert the port boards.

Setting jumpers and switches

Set the jumpers and switches for board position, bus termination, and other features as described in this section. For more information about jumper or switch locations, see the Dialogic documentation listed in Table 8: Supported MAS port boards for customer-provided servers on page 44.

Note:

The Dialogic documentation describes more setups than the ones used for Avaya Modular Messaging. If information in a Dialogic document conflicts with this Avaya document, follow the steps in the Avaya documentation. Use the Dialogic documentation to locate various items on the board or verify cable connections.

To set the jumpers and switches on each board:

1. Remove the new port board from its packaging. Do not touch the circuit board surface.
2. Set the jumpers and switches as required for this type of board:
   - D/480JCT-1T1 and D/600JCT-1E1 QSIG board settings on page 47
   - D/82JCT-U PCI Univ set emulation board settings on page 47
   - D/120JCT-LS 12-port analog board settings on page 48
   - D/41JCT-LS 4-port analog board settings on page 49

D/480JCT-1T1 and D/600JCT-1E1 QSIG board settings

To set up Dialogic T1 or E1 QSIG boards, you must set only the board ID for the port board.

1. Turn the rotary switch, located on the top of the port board. Set the board ID according to the slot number in which the board is installed.

   The Dialogic port boards usually are placed in the PCI slots starting from the right side of the cabinet. For the board ID numbers for a 6-PCI slot MAS, see Table 9.

Table 9: D/480JCT-1T1 and D/600JCT-1E1 QSIG board ID settings

Card number	Board ID number	PCI slot number
1	0	6
2	1	5

Note:

You do *not* need to set the Computer Telephony (CT) bus for bus termination if more than one QSIG board is installed in an MAS.

2. Continue with Installing the port boards on page 51.

D/82JCT-U PCI Univ set emulation board settings

To set up Dialogic digital set emulation (DSE) boards, you must set only the bus termination.

1. If the server contains more than one port board, set the boards on both ends of the Computer Telephony (CT) bus for bus termination. Use jumper **P8** to set CT bus termination as shown in Table 10.

Table 10: D/82JCT-U set emulation board settings for CT bus termination

Number of cards	P8 jumper	CT bus termination
1	OFF	Do not terminate bus.
2	Card 1: ON pins 1 and 2 Card 2: ON pins 1 and 2	Terminate bus on both boards.
3	Card 1: ON pins 1 and 2 Card 2: OFF Card 3: ON pins 1 and 2	Terminate bus on boards 1 and 3.
4	Card 1: ON pins 1 and 2 Card 2: OFF Card 3: OFF Card 4: ON pins 1 and 2	Terminate bus on boards 1 and 4.

Figure 16 shows the **P8** jumper settings.

- The setting on the left is ON. Pins 1 and 2 are jumpered. If set, the CT bus is terminated.
- The setting on the right is OFF.

Figure 16: D/82JCT-U board settings for CT bus termination: ON or OFF

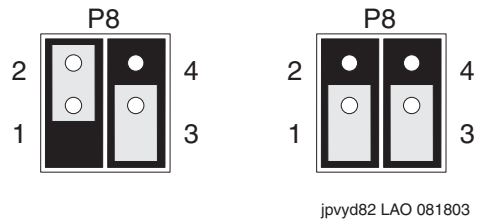

2. Continue with Installing the port boards on page 51.

D/120JCT-LS 12-port analog board settings

To set up Dialogic 12-port analog boards:

1. Set the unique board ID for the port board. Turn the rotary switch, located on the top of the board. Set the board ID according to the slot number in which the port board is installed.

   The Dialogic port boards usually are placed in the PCI slots starting from the right side of the cabinet. For the board ID numbers for a 6-PCI slot MAS, see Table 11.

Table 11: D/120JCT-LS 12-port analog board ID settings

Card number	Board ID number	PCI slot number
1	0	6
2	1	5
3	2	4
4	3	3

2. Set the hook-switch state of the port board to **ON** so callers hear a busy signal when the board is not initialized. Use the **SW1** switch, located at the top of the board, to set the hook-switch state. See Figure 17.

Figure 17: D/120JCT-LS analog board setting for on-hook switch

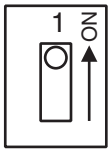

jpvysw1 LAO 081803

3. Continue with Installing the port boards on page 51.

D/41JCT-LS 4-port analog board settings

To set up Dialogic 4-port analog boards:

1. Set the unique board ID for the port board. Turn the **SW30** rotary switch, located on the top of the board. Set the board ID according to the slot number in which the board is installed.

   The Dialogic port boards usually are placed in the PCI slots starting from the right side of the cabinet. For the board ID numbers for a 6-PCI slot MAS, see Table 12.

Table 12: D/41JCT-LS 4-port analog board ID settings

Card number	Board ID number	PCI slot number
1	0	6
2	1	5
3	2	4
4	3	3

2. Set the hook-switch state of the port board to **ON** so callers hear a busy signal when the board is not initialized. Use the red **SW4** switch, located near the top of the board, to set the hook-switch state. See Figure 18: D/41JCT-LS analog board setting for on-hook switch on page 50.

Figure 18: D/41JCT-LS analog board setting for on-hook switch

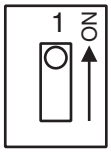

jpvysw1 LAO 081803

3. If the server contains more than one port board, set the boards on both ends of the Computer Telephony (CT) bus for bus termination. Use jumper **JP2** to set CT bus termination as shown in Table 13.

Table 13: D/41JCT-LS analog board settings for CT bus termination

Number of cards	JP2 jumper	CT bus termination
1	OFF	Do not terminate bus.
2	Card 1: ON pins 1 and 2 Card 2: ON pins 1 and 2	Terminate bus on both boards.
3	Card 1: ON pins 1 and 2 Card 2: OFF Card 3: ON pins 1 and 2	Terminate bus on boards 1 and 3.
4	Card 1: ON pins 1 and 2 Card 2: OFF Card 3: OFF Card 4: ON pins 1 and 2	Terminate bus on boards 1 and 4.

Figure 19 shows the **JP2** jumper settings.

- The setting on the left is ON. Pins 1 and 2 are jumpered. If set, the CT bus is terminated.
- The setting on the right is OFF.

Figure 19: D/41JCT-LS analog board settings for CT bus termination: ON or OFF

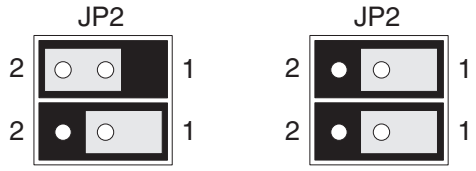

jpvyd41 LAO 081803

Installing the port boards

After you verify that the settings are correct, install the MAS port boards:

CAUTION:
Verify that all port boards in an MAS are of the same type. You cannot mix board types within the same MAS, such as analog boards with DSE or QSIG.

1. Slide the slot retainer bracket on the port board into the slot guide on the chassis.
2. Align the edge connector on the port board with the slot connector. Apply pressure to the top of the board only. Push down until the edge connector is firmly seated. See Figure 20.

Figure 20: Installing a port board in a CPE MAS

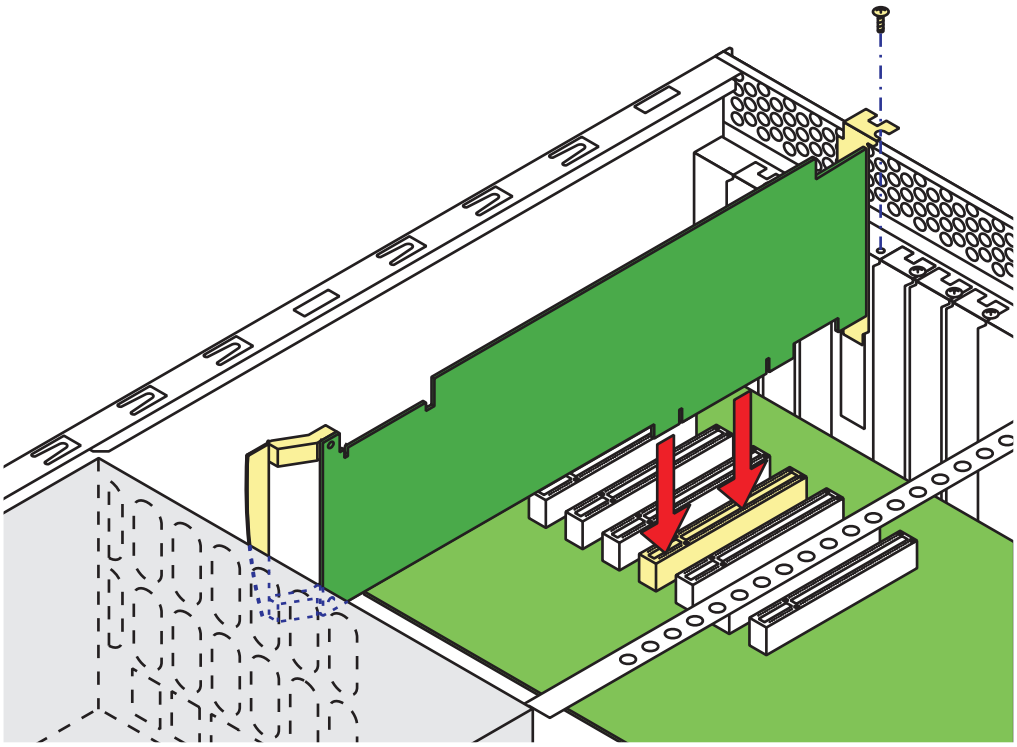

3. Replace and tighten the retaining screw for the port board.
4. Repeat Steps 1 through 3 to install any additional port boards.

5. *If the MAS has multiple port boards,* attach the Computer Telephony (CT) bus cable to connect all the port boards:
   a. Position the CT bus cable so the colored stripe on the ribbon cable faces the ports at the back of the chassis.
   b. Start with the board in the highest numbered slot. Attach the end connector on the bus cable to the CT bus edge connector at the top of the board.
   c. Connect the next bus connector to the next port board, and so on.
   d. If the cable has extra connectors or loose ribbon cable, tuck down the cable so it does not snag when you replace the cover.
6. Replace the chassis cover.
7. Plug in the AC power cord.
8. Restore power to the server.

   The server boots.

Disabling the Dialogic hardware

The Microsoft Windows software automatically detects the Dialogic port boards that you just installed. You configure these boards later as part of the Modular Messaging software installation. Do *not* install the Dialogic drivers at this time.

To temporarily disable the Dialogic port boards:

1. After the server boots, log on using an account that has permission to install software, such as the local administrator.
2. The system runs a Found New Hardware Wizard once for each new Dialogic port board installed in the MAS. To complete the wizard:
   a. On the Welcome screen, use the default option to **Install the software automatically**. Click **Next**.
   b. Wait while the system searches for a driver.
   c. When the wizard reports that it **Cannot Install this Hardware**, click **Finish**.
3. Repeat Step 2 for each repetition of the Found New Hardware Wizard.

   Note:

   You install the Dialogic drivers later with the rest of the Modular Messaging software.

Connecting MAS port boards to the switch

Connect the MAS port boards to the PBX (switch), as described in this section.

To connect MAS port boards to the switch:

1. Assemble the required cables.

   Note:
   Port boards ordered through Avaya ship with the correct cables.

2. Connect each port on the port boards to the switch (PBX) as required:

   Note:
   Check the numbering on the board faceplate to verify that you are connecting the correct cable to the correct port.

- **For E1-QSIG or T1-QSIG boards:**
  a. Connect the port on the Dialogic E1-QSIG or T1-QSIG board using an RJ-48C Ethernet cable.
  b. The other end of the cable must be connected to the QSIG board on the corporate switching system. The organization responsible for maintaining the corporate switch must make this connection. See the customer contract or the statement of work.
- **For set emulation boards:**
  a. Connect each port on the Dialogic set emulation (DSE) board using the D/82U cable (Intel part number 86-0155-001).
  b. The other end of the cable must be connected to a 4-wire punch-down block on the corporate switching system. The organization responsible for maintaining the corporate switch must make this connection. See the customer contract or the statement of work.
- **For analog boards:**
  a. Connect each port on the installed analog boards to one end of a standard RJ-11 tip/ring cord. You can also use individual tip/ring cables and a 12-port harmonica. Note which cables connect to which ports.
  b. The other end of the cable must be connected to an analog line on the corporate switching system. The organization responsible for maintaining the corporate switch must make this connection. See the customer contract or the statement of work.

Completing the hardware installation

To complete the hardware installation on a customer-provided equipment (CPE) server:

1. The Dialogic port boards require their own drivers and software for board configuration. You install the Dialogic drivers and software as part of the Modular Messaging software installation. For more information, see Installing and Running the Modular Messaging Configuration Wizard on page 102.
2. If you intend to access this server remotely using a modem, verify that the modem is correctly installed and configured. For example, a remote support center might need to dial in to this server for troubleshooting or maintenance.
   a. For information about modem installation, setup, and operation, see the documentation provided with the modem.
   b. For information about configuring the Modular Messaging software to use a modem, see Chapter 8: Configuring the voice mail system on page 113.

Chapter 4: Preparing to install Modular Messaging software

This chapter describes how to set up Modular Messaging accounts on the directory server and prepare the directory server to support the Modular Messaging software. The steps in this chapter must be completed by the directory server administrator or other authorized customer personnel before a technician can install Modular Messaging software on the first MAS in the system.

Topics in this chapter include:

Overview

This chapter describes the following system preparation steps:

1. For all installations, you must create a Modular Messaging security group, customer account and technical support account on the directory server and add the correct permissions for each account.
2. Depending on local requirements, you must create computer accounts for each MAS in the Active Directory and set up each MAS to allow remote access by technical support staff.
3. You must update the data schema before you install any Modular Messaging software on any Messaging Application Server (MAS) in the domain.

   Note:

   This procedure can be done only on a machine that is running the Windows 2000 or 2003 Server operating system. These components cannot be installed on a workstation OS.

   To complete this update, you must log on to the directory server using an account that has permission to do Active Directory and data schema administration. This is usually the Windows domain administrator account. The account must have both Domain Admin and Schema Admin rights.

   CAUTION:

   The directory server requires a reboot after the Modular Messaging software is installed if Active Directory Extensions have been added. Schedule down time for the directory server before doing the tasks described in Updating the Active Directory and data schema on page 68.

   All servers must meet the requirements listed in the *Avaya Modular Messaging Concepts and Planning Guide* (PDF 2 MB), available on the documentation media shipped with the system. Review this document to verify that all Exchange servers, directory servers, MASs, and client machines are ready to support Modular Messaging software.

To successfully set up the Windows system to support the Modular Messaging software, you need:

- Access to the *Avaya Modular Messaging Messaging Application Server Software* media
- A completed copy of the relevant planning forms listed in Appendix A: System planning forms on page 209 including:
  - The Corporate network planning form on page 216 showing the NetBIOS name of each MAS, the default (or primary) peer Exchange server, the directory server, and the Windows domain.

- The Modular Messaging logon accounts form on page 221 showing the customer-specified Modular Messaging account names and passwords.
- Switch and messaging information on page 225 showing the test subscribers and telephone user interfaces required to test the Modular Messaging software.
- Customer-provided Microsoft Exchange 2003 System Management Tools
- Microsoft Exchange 2003 Service Pack 2

Setting up Modular Messaging accounts

You must create two Windows domain user accounts on the directory server to support Modular Messaging and you must assign sufficient permissions to the accounts.

- Create a customer account to install and administer the Modular Messaging software.

  Note:

  In previous releases this account was referred to as the service account.

- Create a technical support account to allow remote support staff to access and administer the Modular Messaging system.

At this time you can also optionally create a test subscriber account for each Telephone User Interface (TUI) that will be used at this site. The test subscriber accounts are required to support acceptance testing after the MAS is configured. For more information about creating accounts, see the Microsoft Windows documentation.

Note:

If you do not create the Modular Messaging accounts using the procedure in this section (for example, if the Modular Messaging customer account does not have sufficient privileges), you must create the Modular Messaging customer account container manually. See Creating the voice mail domain container manually if required on page 64.

Creating Modular Messaging customer and technical support accounts

To prepare for creating these accounts, complete the following steps:

Note:

Windows software accommodates more than one way to accomplish the tasks described. Consider the following steps guidelines that you might need to modify at your site.

1. Log in to the Active Directory server using an account that has privileges to create new user accounts (such as *administrator*).
2. Click **Start** > **All Programs** > **Administrative Tools** > **Active Directory Users and Computers**.
3. In the Active Directory Users and Computers window, expand the directory for the Windows domain you intend to use for Modular Messaging. See Item **C10** (Microsoft Windows domain) on the Corporate network planning form on page 216.

Creating the Modular Messaging customer account

To create the Modular Messaging customer account, you must first create a new security group for the account and then create the account and assign appropriate permissions.

Creating the Modular Messaging customer account group

Create a new security group that will give the Modular Messaging customer account the appropriate permissions. For example:

1. In the left pane, right-click **Users** > **New** > **Group**.
2. In the New Object - Group window, create a new security group as follows:
   a. Choose an appropriate name (such as *MM Service Permissions*). See Item **11** on the Modular Messaging System Planning Form on page 213.
   b. Select the group scope appropriate for this site.
   c. Select group type **Security**. Click **Next**.
   d. On the next screen, do *not* create a mailbox (clear the checkbox if it is checked). Click **Next**.
   e. Click **Finish**.
3. In the left pane, click **Users**.
4. In the right pane, find the new group (such as *MM Service Permissions*) and double-click it.
5. In the properties window, click the **Member Of** tab.
   a. Click **Add**.
   b. In the Select Groups window, add the following groups to assign the necessary permissions. Double-click each group to add it to the permissions list:
      - Administrators (required for the domain that contains the Global Catalog servers that will be used as peer directory servers for Modular Messaging)
      - Account Operators (required for each domain that will contain user accounts to be enabled for Modular Messaging)
   c. Click **OK** to close this window.
6. Click **OK** to close the properties window.

Creating the Modular Messaging customer account

Create a new account for installing and administering the Modular Messaging software (this is the Modular Messaging customer account). For example:

1. In the left pane, right-click **Users** > **New** > **User**.
2. In the New Object - User window, create a new Modular Messaging customer account using a secure logon name. For example:
   a. First name: Customer
   b. Last name: Account
   c. User logon name: *customer-provided* (such as *mmacct*). See Item **A12** on the Modular Messaging logon accounts form on page 221.

   Note:
   Ensure that you are satisfied with the Modular Messaging account names and passwords that you choose now. They are not easy to change later.

   d. Click **Next**.
   e. Enter and confirm the password. See Item **A12** on the Modular Messaging logon accounts form on page 221.

   Note:
   Passwords for Modular Messaging accounts must be at least 8 characters long. Do not create passwords composed of easily guessed words or numeric combinations, including sequential or repeated numbers. You must use a combination of at least three of the following character types: uppercase and lowercase letters, numbers, and special characters or symbols.

   f. You *must* select **Password never expires**.

   Note:
   If you change the password for a Modular Messaging customer account at some point, contact the software-provider for the password-changing procedure.

   g. Click **Next**.
   h. On the following page, clear the checkbox for **Create an Exchange mailbox**.

   Note:
   You do not need to create an Exchange mailbox for a Modular Messaging customer account.

   i. Click **Next**.
   j. When the summary is displayed, click **Finish**.
3. In the right pane, locate the new account and double-click it.
4. In the properties window, click the **Member Of** tab.
   a. Click **Add**.

b. In the Select Groups window, add the Modular Messaging customer account security group that you just created (such as *MM Service Permissions*).

c. Click **OK** to close this window.

5. Click **OK** to close the properties window.

   You will assign permissions to the Modular Messaging customer account in Assigning permissions to the customer account group on page 62.

Creating the Modular Messaging technical support account

Create a new account to allow remote support staff to access and administer the Modular Messaging system. For example:

1. In the left pane, right-click **Users** > **New** > **User**.
2. In the New Object - User window, create a new Modular Messaging remote access account using a secure logon name. For example:

   a. First name: Support

   b. Last name: Account

   c. User logon name: *customer-provided* (such as *techacct*). See Item **A13** on the Modular Messaging logon accounts form on page 221.

   d. Click **Next**.

   e. Enter and confirm the password. See Item **A13** on the Modular Messaging logon accounts form on page 221.

   f. You *must* select **Password never expires**.

   Note:

   If you ever change the password for the remote access account, be sure to notify the appropriate technical support organization.

   g. Click **Next**.

   h. On the following page, clear the checkbox for **Create an Exchange mailbox**.

   i. Click **Next**.

   j. When the summary is displayed, click **Finish**.
3. In the right pane, double-click the name of the new account.
4. In the properties window, click the **Member Of** tab.
5. Verify that the **Domain Users** entry is present. If the Domain Users entry is missing:

   a. Click **Add**.

   b. In the Select Groups window, add **Domain Users** to this account. Click **OK** to close the window.
6. Click **OK** to close the properties window.

Creating test subscriber accounts

Create at least one new test subscriber account for each telephone user interface (TUI) that will be used at this site. The test subscriber accounts will be used for acceptance testing later in the installation. You may need to create up to three account, one for the MM Aria telephone user interface (TUI), one for the MM AUDIX TUI, and one for the MM Serenade TUI. For example:

1. In the left pane, right-click **Users > New** > **User**.
2. In the New Object - User window, create a new account, such as:
   a. First name: *Aria Test*
   b. Last name: *Subscriber*
   c. User logon name: *customer-provided* (such as *testsub1*). See Mailbox and subscriber information on page 226.
   d. Click **Next**.
   e. Enter and confirm the password for the account (*customer-provided*).
   f. Set up other parameters as required for this site.
   g. Click **Next**.
   h. On the third page, verify that **Create an Exchange mailbox** is selected.
   i. Select the required **Server** (Exchange organization) and **Mailbox Store** (Exchange server).
   j. Click **Next**.
   k. When the summary is displayed, click **Finish**.

   A new account is added to the list in the right pane.

   Note:

   The extension for the test subscriber must be administered on the PBX by the appropriate party.
3. Repeat Steps 1 and 2 to set up test subscribers for AUDIX and Serenade if required for this site.
4. Close the Active Directory window.
5. You will need to assign Modular Messaging characteristics to this account after the Modular Messaging software is installed. See Adding a test subscriber on page 136.

Assigning permissions to the customer account group

Use the steps in this section to assign permissions to the Modular Messaging customer account by assigning permissions to the customer account group you created in Creating the Modular Messaging customer account group on page 58. Sufficient permissions must be assigned to the group for the customer account to function as required. For details on permission requirements, see Appendix H: Administrator reference on page 305.

To assign permissions to the group you must:

1. Edit the registry to display the security tab.
2. Add required permissions

Editing the registry

By default, the **Security** tab for the Exchange organization container and some of the key sub containers are not visible using Exchange System Manager or Active Directory Sites and Services. The following registry change enables the **Security** tab at all levels within the Microsoft Exchange container.

To update the registry:

1. Log in as the Microsoft Exchange administrator.
2. Click **Start** > **Run**.
3. In the Run window **Open** field, type **regedit** and press **Enter**.
4. In the Registry Editor window, locate the following key:

   HKEY_CURRENT_USER\Software\Microsoft\Exchange\ExAdmin
5. Right-click **ExAdmin** and select **New** > **DWORD Value**.
6. Enter the following value name: **ShowSecurityPage**
7. Double-click the **ShowSecurityPage** value.
8. In the Edit DWORD Value window, set the Value data to **1**.
9. Click **OK**.
10. Close the Registry Editor window.

Adding permissions

Use Active Directory Sites and Services to add the required permissions. The permissions listed in Step 7 are the absolute minimum required for the Modular Messaging software to function. For convenience, all the properties should be created at the Exchange Organization level. You can choose to apply them at a level lower down the tree if required, but this might affect your ability to manage Modular Messaging using Exchange System Manager.

To assign permissions to the Modular Messaging customer account:

1. Log in to the Active Directory server using an account that has privileges to assign permissions to accounts (such as *administrator*).
2. Click **Start** > **All Programs** > **Administrative Tools** > **Active Directory Sites and Services**.
3. In the left pane, select **Active Directory Sites and Services**.
4. From the **View** menu, select **Show Services Node** (the menu item shows a check mark after you select it).
5. In the left pane, expand **Services**, expand **Microsoft Exchange**, and then locate the appropriate *Exchange Organization* object that Modular Messaging will connect to. Right-click it and select **Properties**.
6. In the properties window, click the **Security** tab. This tab is visible only if you edited the registry as directed in the previous procedure.
   a. Click **Add**.
   b. In the Select Users, Computers, and Groups window, add the Modular Messaging customer account group (such as *MM Service Permissions*).
   c. Click **OK** to close this window.
7. Under **Permissions** for the group, **Allow** only the following permissions. Clear any checkboxes that do not apply. For details on these permission requirements, see Appendix H: Administrator reference on page 305.

   Note:

   You may find it easier to verify the permissions by working from the bottom of the list to the top.

   - Read
   - Execute
   - Read permissions
   - Create children
   - List contents
   - Read properties
   - Write properties

- Administer information store
- Create named properties in the information store
- View information store status
- Receive As
- Send As

8. Click **Apply** to verify the settings.
9. Click **OK** to close the properties window.
10. Close the Active Directory Sites and Services window.
11. After you change these permissions, to flush the directory cache, you can stop and restart all Microsoft Exchange services or wait 10 minutes for it to expire.

    Note:

    If you have multiple domain controllers in the forest, it might be necessary to wait for directory replication to complete.

    To manually restart Microsoft Exchange services:

    a. Right-click **My Computer** and select **Manage**. In the Computer Management window, the left (Tree) pane, expand **Services and Applications**, and then click **Services**.

    b. In the right pane, scroll down to the Microsoft Exchange services.

    c. Right-click each Microsoft Exchange service in turn and select **Restart**.

Creating the voice mail domain container manually if required

Do the task in this section only if you did not create the Modular Messaging customer account using the procedure in *Creating Modular Messaging customer and technical support accounts* on page 57.

If you do not assign the permissions Avaya recommends to the Modular Messaging customer account for security reasons, you can create the voice mail domain container for the Modular Messaging customer account manually and assign it appropriate security settings. Use this procedure if the Modular Messaging customer account does not have sufficient privileges to create container objects at the voice mail domain base location.

To use this procedure, you must install ADSIEdit. ADSIEdit is a Microsoft Management Console (MMC) snap-in available as part of Microsoft Windows 2000 or 2003 Server and Microsoft Windows Advanced 2000 or 2003 Server Support Tools.

To assign security settings to the voice mail domain container:

1. Run the **ADSIEdit** Windows support tool.
2. Connect to the **Domain NC** of the domain containing the Modular Messaging customer account.

3. Locate the base location for the voice mail domain container.

   Note:
   If you have not selected a custom location, by default the voice mail domain container is the root container of the Microsoft Windows 2000 or 2003 domain.

4. From the **Action** menu, select **New** > **Object** > **Container**.
5. Give the container the value *Octel* and click **Next**.

   Note:
   The name of the container is case sensitive.

6. Display the properties for the new container.
7. Ensure that the Account Operators Group is assigned Full Control in the security settings for the new container.

Creating MAS accounts

Before the Modular Messaging software is installed, the domain administrator must create computer accounts for each MAS and define the Modular Messaging customer account as a user that has permission to join the Windows domain. This procedure facilitates remote access setup (see Setting up each server for remote access on page 66) and Modular Messaging software installation.

For example, to add a new computer account to the Active Directory:

1. Log in to the Active Directory server using an account that has privileges to add a computer account to a domain (such as *Administrator*).
2. Click **Start** > **All Programs** > **Administrative Tools** > **Active Directory Users and Computers**.
3. In the Active Directory Users and Computers window, expand the directory for the Windows domain that you will use for Modular Messaging. See Item **C10** (Microsoft Windows domain) on the Corporate network planning form on page 216.
4. To create a new computer account, right-click **Computers**, and then select **New** > **Computer**.
   a. In the New Object - Computer window, type the computer name for the MAS. See Item **C1** on the Corporate network planning form on page 216.
   b. Right click on the computer name. Select **Properties**. On the **Properties** window select the **Managed by** tab.
   c. Click **Change** to specify that a different user or group can add this computer to the domain.

d. In the Select User or Group window, double-click the Modular Messaging customer account (such as *mmacct*). See Item A12 on the Modular Messaging logon accounts form on page 221

e. Click **Next**.

f. Do not select “this is a managed computer.” Click **Next**.

g. Click **Finish** to close this window.

5. If more than one MAS is to be installed, repeat Step 4 until all MASs are added.

Setting up each server for remote access

Remote access allows technical support staff to dial into a system to correct problems and perform routine maintenance. Unless other arrangements were made, use the following procedure to allow each Modular Messaging server to support remote access calls.

1. The Active Directory Users and Computers window should already be open. If not, repeat Steps 1 through 3 in Creating MAS accounts on page 65 to log in to an account with the appropriate privileges and access the Active Directory.
2. In the left pane of the Active Directory Users and Computers window:
   a. Expand the directory for the domain that will be used for Modular Messaging. See Item **C10** **(**Microsoft Windows domain**)** on the Corporate network planning form on page 216.
   b. Click **Users**.
3. In the right pane of the window, double-click **RAS and IAS Servers** to open the properties window.
4. In the RAS and IAS Servers Properties window:
   a. Click the **Members** tab.
   b. Click **Add**.
   c. In the Select Users, Contacts, Computers, or Groups window, double-click the entry for this server (for example, *MYMAS1*). It has a blue terminal icon.
   d. Verify that the correct computer name is shown underlined in the list box.
   e. Repeat Steps c and d to add all Modular Messaging servers to this list. See the Corporate network planning form on page 216.
   f. Click **OK** to close this window.
   g. Click **OK** again to close the RAS and IAS Servers Properties window.
5. In the right pane, double-click the account to be used for remote technical support, such as example *Services Account* or *Support Account*. See Item A13 on the Modular Messaging logon accounts form on page 221

6. In the properties window for the remote access account:
   a. Click the **Dial-in** tab.
   b. Under **Remote Access Permission (Dial-in or VPN)**, select **Allow access**.
   c. Leave CallBack Options set at **No Callback**.
   d. Click **OK** to close this window.
7. ***If Avaya is to support this Modular Messaging system:*** Enable reversibly encrypted passwords in the domain as follows:
8. In the left pane of the Active Directory window, right-click the domain name (such as *zodiac.loc.avaya.com*), and then select **Properties**.
   a. In the domain properties window, on the **Group Policy** tab, click **Default Domain Policy**, and then click **Edit**.
   b. In the Group Policy console tree, navigate to and then click **Password Policy** as follows: **Computer Configuration** > **Windows Settings** > **Security Settings** > **Account Policies** > **Password Policy**.
   c. In the right pane, double-click **Store password using reversible encryption for all users in the domain**.
   d. In the Security Policy Setting window, select **Enabled**, and then click **OK**.
   e. Close the Group Policy window.
   f. Close the domain properties window.
9. Close the Active Directory Users and Computers window.

Updating the Active Directory and data schema

Complete this task only once per Windows domain, on the directory server domain controller, before installing the Modular Messaging software on any MAS.

The Active Directory must be updated as described in this section.

Note:

This procedure can be done only on a machine that is running the Windows 2000 or 2003 Server operating system. These components cannot be installed on a workstation OS.

Note:

To complete this update, you must log on to the directory server using an account that has permission to do Active Directory and data schema administration. This is usually the Windows domain administrator account. The account must have both Domain Admin and Schema Admin rights.

If you are running Windows 2000 or 2003 with Active Directory, the data schema must be updated before you install any Modular Messaging software on any Messaging Application Server (MAS) in the domain. The schema defines the objects and properties stored in Active Directory, and contains definitions of object attributes. The schema is updated only once in the *forest*.

For details about the changes made to the schema for a Modular Messaging software update, see Appendix H: Administrator reference on page 305.

CAUTION:

If you do not update the schema first when required, the Modular Messaging software will not install correctly. It will have to be completely removed and then reinstalled following an Active Directory schema update.

Logging in and preparing to update

To update the Active Directory for Modular Messaging:

1. Log on to the directory server using an account that has permission for Domain Administration and Schema Administration.
   - This account is usually the Windows domain administrator account. For an Exchange 2000 or 2003 system, this account requires both Domain Administration and Schema Administration rights.
   - If you are updating the messaging software in a child domain, the account must have Domain Admin rights for both the parent domain and the child domain. If the Active

Directory update is executed from the child domain controller, enter the account name in the format: *Parent Domain\Domain Admin*.

- If you are using Octel Analog Networking, this procedure must be performed on the domain controller that is acting as the schema master.

2. Close applications or stop monitoring as follows:
   - Close the Active Directory Users and Computers application or the Microsoft Exchange Administrator application, depending on the application that is installed to support this version of Exchange.
   - Close any open windows for other applications.
   - Stop any monitoring tools that are running, such as anti-virus software.

Running the Modular Messaging installation wizard

When all preparations are complete, run the Modular Messaging Installation Wizard as follows:

1. Insert the *Avaya Modular Messaging Messaging Application Server Software* media (disk 1) into the DVD drive of the directory server.

   Note:
   If the directory server does not contain a DVD drive, the *Avaya Modular Messaging Messaging Application Server Software* media can be inserted into the shared DVD drive of another machine, and then mapped as a network drive on this server.

2. Run the Modular Messaging Installation Wizard as follows:
   a. In Windows Explorer, navigate to the DVD drive (such as D:).
   b. Navigate to the **Install** directory.
   c. Double-click the file **Setup.exe**.
3. On the main screen, verify that the Configuration drop-down box shows **Microsoft Exchange**.
4. Click the **Read Me** button to review the Readme file for recent notices.

Updating the Active Directory

To update the Active Directory and data schema (if required) on this machine:

1. Click the plus sign (**+**) to expand the **Active Directory updates** folder.

   Note:
   Do this task only once per Windows domain.

2. Select the following checkboxes to install the appropriate software components to support Modular Messaging:
   - *Enable Modular Messaging:* Click this box to enable extension data replication among Active Directory servers. This allows Modular Messaging to store subscriber configuration information and support the correct operation of and access to client applications.
   - *Enable Octel Analog Networking:* If Octel Analog Networking is used at this site, click this box to add the appropriate classes and attributes to the schema. This causes a Modular Messaging Octel Analog Networking tab to appear in the Microsoft Exchange administration program.
   - *Enable User Administration:* Click this box to enable objects that will appear on the Modular Messaging tab in the Active Directory. This allows administrators to use Microsoft Exchange administration to enable Modular Messaging features for users, groups, or contacts.

   Note:

   Although Octel Analog Networking is an optional feature, you might choose to install it at this time in case Octel Analog Networking is ever added to the system. The other software components are always required.
3. When all required components are selected, click **Install**.
4. Each component you select causes a Modular Messaging Active Directory installation wizard to run. Complete each wizard as follows:
   a. On the welcome screen, click **Next**.
   b. If prompted, enter the name and password of an account that has both Domain Admin and Schema Admin rights. (For example, *windowsdomain\schemaAdmin* and password.) Click **Next**.
   c. After the Active Directory registration process is complete, click **Next**.
   d. To complete the wizard, click **Finish**.
   e. Repeat Steps a through d for each occurrence of the wizard.

   Note:

   The Octel Analog Networking component causes two installation wizards to run.
5. When component installation is complete, click **Close**.
6. Continue with Chapter 5: Adding Exchange extensions for Modular Messaging on page 71.

Chapter 5: Adding Exchange extensions for Modular Messaging

This chapter describes how to install the Microsoft Exchange extensions that support user administration for Modular Messaging software. Installing the extensions creates a Modular Messaging tab in the Active Directory, however, the page is not functional until the Modular Messaging software is installed and operational.

Do this task on any machine that you will use for administering subscribers (such as the Exchange server, an MAS, or a client machine). You can do this task multiple times per network.

Note:

For new installations, you must have successfully completed the tasks in Chapter 4: Preparing to install Modular Messaging software on page 55 before you can do the tasks described in this section.

You will not be able to add the extensions to an MAS until the MAS has been installed. For an MAS, you will install the extensions when you install the Modular Messaging software. See Chapter 6: Configuring a new Avaya MAS on page 77, or Chapter 7: Configuring a customer-provided server on page 91.

Topics in this chapter include:

Overview

This task assumes that you have already created a Modular Messaging customer account and updated the directory server as described in Chapter 4: Preparing to install Modular Messaging software on page 55.

CAUTION:

If the directory server has not been updated as described in Chapter 4: Preparing to install Modular Messaging software on page 55, do not proceed with the steps in this chapter. The Modular Messaging software will not install correctly, and it will have to be completely removed and reinstalled after the Active Directory updates have been made.

To successfully install the Modular Messaging Microsoft Exchange extensions, you need:

- Access to the *Avaya Modular Messaging Messaging Application Server Software* media (disk 1)
- Downtime scheduled for the Microsoft Exchange server
  - *Exchange 2000 or 2003 server:* This release of Exchange does not require the Subscriber Administration extensions or Octel Analog Networking Administration component to be installed on the Exchange server. If you choose to install them on the Exchange machine, the Exchange server does need to be rebooted (see the following note).

Note:

You can install the Modular Messaging Subscriber Administration extensions component on any machine that has the Microsoft Exchange System Management Tools installed. The Subscriber Administration extensions add a tab to the Active Directory Users and Computers property page that is used for Modular Messaging subscriber administration. Any machine on which you install the Subscriber Administration extensions always requires a reboot.

To use the Modular Messaging Active Directory Extensions for administration, you must have sufficient rights on the Active Directory to modify users.

Note:

If Octel Analog Networking is used at this site, you can install the Octel Analog Networking Administration component on any machine where the Microsoft Exchange System Management Tools are installed.

Octel Analog Networking is not supported with the IP H.323 switch integration.

CAUTION:

All servers must meet the requirements listed in the *Avaya Modular Messaging Concepts and Planning Guide* (PDF 2 MB), available on the documentation media shipped with the system. Review this document to verify that all Exchange servers, directory servers, MASs, and client machines are ready to support Modular Messaging software.

Note that the Microsoft Exchange System Management Tools must be installed on the machine where you install the Modular Messaging Exchange extensions. For details, see Running the Modular Messaging Configuration Wizard on page 81 for an Avaya MAS, or Installing and Running the Modular Messaging Configuration Wizard on page 102 for CPE.

Adding the Exchange extensions

Complete this task for any machine that you will use for administering subscribers (such as the Exchange server, or a client machine). You can do this task multiple times per network.

Update the Microsoft Exchange extensions as follows:

- *For new installations:* Install these tools on the Exchange server, or other machine where they are required.
- *For upgrades:* Update the Exchange extensions software on any machines where it is installed.

Note:

Review the conditions for installing these Modular Messaging software components in the Overview on page 72. For an MAS, you will install the Subscriber Administration extensions component when you install the rest of the Modular Messaging software. See Chapter 6: Configuring a new Avaya MAS on page 77, or Chapter 7: Configuring a customer-provided server on page 91.

*Although this procedure creates a Modular Messaging tab in the Active Directory, the page will **not** be functional until after the rest of the Modular Messaging software is installed and operational.*

Logging in and preparing to update

To update the Microsoft Exchange extensions for Modular Messaging:

1. Log in to the appropriate machine using an account that has permission to install software.
2. Close applications and stop monitoring on this machine as follows:
   - Close the Active Directory Users and Computers window or the Microsoft Exchange Administrator, if either application is installed on this machine.

   Note:

   At some sites, the same server might be running both Active Directory and the Exchange software. Close *all* Exchange and Active Directory windows before installing the Exchange extensions software.

   - Close any open Exchange applications including the Microsoft Exchange System Management Tools.
   - Close any open windows for other applications.
   - Stop any monitoring tools that are running, such as anti-virus software.

Running the Modular Messaging installation wizard

When all preparations are complete, run the Modular Messaging Installation Wizard:

1. Insert the *Avaya Modular Messaging Messaging Application Server Software* media (disk 1) into the DVD drive of this machine.

   Note:

   If this machine does not contain a DVD drive, the *Avaya Modular Messaging Messaging Application Server Software* media can be inserted into the shared DVD drive of another machine, and then mapped as a network drive on this machine.

2. To run the Modular Messaging Installation Wizard:
   a. In Windows Explorer, navigate to the DVD drive (such as D:).
   b. Navigate to the **Install** directory.
   c. Double-click the file **Setup.exe**.
3. On the main screen, verify that the Configuration drop-down box shows **Microsoft Exchange**.
4. Click the **Read Me** button to review the Readme file for recent notices.

Adding the Exchange extensions

To add the Exchange extensions tools to this machine:

1. Click the plus sign (**+**) to expand the appropriate Exchange extensions folder. Select the correct extensions for the version of Exchange that is installed on this machine:
   - Active Directory / Exchange 2000 extensions (also used for Exchange 2003 systems)
2. To install the Modular Messaging software components required for Microsoft Exchange systems on this server, select the appropriate checkbox:
   - *Octel Analog Networking Administration:* If Octel Analog Networking is used at this site, click this box to allow administrators to administer an Octel Analog Networking gateway. This allows Modular Messaging subscribers to exchange voice messages with any other Octel Analog Networking-enabled voice mail system.
   - *Subscriber Administration:* Click this box to add a Modular Messaging property page in Active Directory Users and Computers for each user that is assigned a mailbox. This tool allows administrators to set up and administer Modular Messaging accounts, configure subscriber properties, and run the MM Client software (the Subscriber Options package).
3. When all required components are selected, click **Install**.
4. When all components finish installing, click **Close**.

5. If you are prompted to restart the system, click **Restart** to complete the software installation.

Note:

After the Exchange extensions are installed a Modular Messaging tab will be present, however, it will not be functional until the installation of the MAS is complete.

Chapter 6: Configuring a new Avaya MAS

This chapter applies only to an Avaya-provided Messaging Application Server (Avaya MAS) installation. It describes how to set up an Avaya MAS to support Avaya Modular Messaging software.

If you are installing a customer-provided MAS, do not use the procedures in this chapter, see Chapter 7: Configuring a customer-provided server on page 91.

CAUTION:

Before you can proceed with the tasks described in this section, a system administrator must have successfully completed the tasks in Chapter 4: Preparing to install Modular Messaging software on page 55.

Topics in this chapter include:

Overview

You must configure each new Avaya Messaging Application Server (Avaya MAS) for local operating settings and to work correctly on the corporate local area network (LAN) as described in this section. In addition, you must prepare it to operate correctly in the Microsoft Windows and Exchange environment.

The majority of the MAS configuration is automated by the Modular Messaging Configuration Wizard (MMCW). The MMCW configures the MAS from information in a site-specific configuration file. This file is created using the Data Collection Tool (DCT). Typically the DCT file is created prior to the installation by the project manager, customer administrator and other experts responsible for the installation. However, the DCT file also can be created at the time of installation by the installer provided all system planning forms have been completed prior to the start of installation. See, Appendix A: System planning forms on page 209.

See the Data Collection Tool Online Help or its printed version, *Avaya Modular Messaging Data Collection Tool Help*, for a complete description of the procedure and specifications for creating a DCT file prior to an installation.

Note:

Always check the Avaya Support Web site at http://www.avaya.com/support for recent updates to the DCT program.

To successfully set up an Avaya MAS, you need:

- A completed Data Collection Tool configuration file, or a completed copy of all the forms in Appendix A: System planning forms on page 209. Required forms are:
  - Modular Messaging System Planning Form on page 213
  - Corporate Network Planning Form on page 215
  - Modular Messaging logon accounts form on page 221.
  - MAS Services and Features Form on page 223
  - Switch and Messaging Information Form on page 225
  - Support information on page 227

  CAUTION:

  If using the completed planning forms from Appendix A: System planning forms on page 209 enter the correct values exactly as they are recorded in the forms. Do not guess at the values or use the examples shown in this guide. If you do, the operation of the customer LAN might be damaged.
- All required hardware installed as described in Chapter 2: Installing Avaya-provided hardware on page 9.

- A printout of the Avaya MAS installation checklist (see New Modular Messaging installation on an Avaya MAS on page 237). Check off steps as you complete them to track your progress.
- The following software from the Avaya Support Web site at http://www.avaya.com/support. For more information about how to access these items on the Web site, see Required documentation and software on page 1.
  - Avaya software updates that are required to bring the Modular Messaging software up to date after an installation. Download this software to a USB storage device. For more information about downloading the updates, see Updating Modular Messaging software on page 279.
  - The latest copy of the Data Collection Tool. Download the DCT update file, **MMDCTDistribute.exe**, from the Avaya support Web site. Download it to a USB storage device. If a DCT file was created for this installation, download the **MMDCTDistribute.exe** to the same USB storage device as the DCT file.
- Customer-provided Microsoft Exchange 2003 System Management Tools
- Microsoft Exchange 2003 Service Pack 2

Switching the monitor to show the correct server

Use whatever method is required at this site to have the monitor display the Avaya MAS that you are installing.

For an 8-port Belkin KVM: the KVM switch is usually connected to the first Avaya MAS (MAS#1) through the first computer port (VGA 01). Subsequent MASs (if present) are connected to computer ports VGA 02, VGA 03, and so on.

To show a different server on the monitor:

1. Slowly press **Scroll Lock**, then **Scroll Lock** again, and then the up (or down) arrow key to change to the server connected to a higher (or lower) port number.

   Alternatively you can type the port number instead of pressing the up or down arrow key (such as *01* for port 1). For complete user instructions, see the KVM switch documentation.

2. If you cannot access the correct server, see Connecting the KVM cables on page 36 and verify that the cable connections are correct. To correct cable problems, power down the system and correct the cable connections. Then turn on the system again.

   For complete user and troubleshooting instructions, see the KVM switch documentation.

   Note:

   You might see the error message **System Event Log Full** when the system boots. You can ignore this message. Modular Messaging does not use this log.

Starting up the system

If a DCT file has been created for this installation and the DCT file is stored on a USB storage device, be sure that the USB storage device is inserted in a USB port on the server before starting the system. This USB storage device should also hold the **MMDCTDistribute.exe** file for the latest Data Collection Tool.

- You can use any of the available USB ports on the back of the server.
- You must remove the front bezel to access the USB port on the front of the Avaya S3500-family message server.

  See Selecting or creating a DCT file on page 81 for additional information.

The Avaya MAS starts to boot after you turn it on.

1. The S3500-family message servers turn on as soon as they receive AC power. However, if the power LED is not lit on the server you are configuring, press the power button on the front of the server. For more information, see Turning on an S3500-family server system on page 42.
2. *Optional:* When the system starts to boot, you can:
   a. Press **Esc** when the splash screen is displayed.
   b. Press the space bar to skip the memory check.

Running the Modular Messaging Configuration Wizard

The Modular Messaging Configuration Wizard (MMCW) launches automatically when the system starts. The MMCW controls the next steps in the installation process. In running the Modular Messaging Configuration Wizard you must complete the following procedures:

1. Selecting or creating a DCT file on page 81
2. Installing third party software on page 85
3. Completing the MMCW Configuration on page 86

Selecting or creating a DCT file

If you have a DCT file already created for this installation, be sure that it is accessible to the MAS that you are installing. In most cases this means inserting a USB storage device with the file into a USB port 1 on the S3500 server prior to starting the system. If you do not have a DCT file already created, you will be able to create one during the installation when completing step 6 of this procedure.

Complete the following steps to configure the MAS from the DCT file:

1. Verifying that the USB storage device with the DCT file and DCT tool update is inserted in the USB port.
2. Copy the DCT data file from the USB storage device to the C:\Avaya_Support directory. Some servers will not recognize a USB drive after a system restart.To copy the DCT data file to the server:
   a. Navigate to the USB drive, **Removable Disk (E:)**.
   b. Right-click the most current DCT file for this site, such as *sitefile.mmdct*.
   c. Copy the .mmdct file to the C:\Avaya_Support folder.
   d. Verify that the correct DCT file is listed in the C:\Avaya_Support directory.
3. Update the Data Collection Tool. To update the tool:
   a. Navigate to the USB drive, **Removable Disk (E:)**
   b. Copy the **MMDCTDistribute.exe** file from the USB storage device to a folder on the server, such as C:\Avaya_Support.
   c. Double-click the executable file **MMDCTDistribute.exe** and then click **Unzip**.
4. When the Modular Messaging Configuration Wizard (MMCW) launches, the Modular Messaging Welcome screen is displayed. Click **Next**.
5. If you have a DCT file already created for this installation, complete the following steps and proceed to step 7. If you don’t have a DCT file go to step 6.

a. On the Locate Configuration Data screen, highlight the DCT file for this installation. If the file is not displayed, click Browse and browse to the directory where the DCT file is stored. By default, the MMCW searches the directory for all files with the file type **.mmdct.*

b. After selecting the DCT file that was created for this installation, click **Next**. You will be prompted to verify the file selection. Click **Yes**, to select the file.

c. The Data Collection Tool launches with the file you selected. Review and make any necessary changes to the file.

d. On the last screen, click **complete** and then save the file again if you have made any changes.

e. Proceed to Step 7

6. If you need to create a DCT file from completed planning forms, complete the following steps.

   a. On the Locate Configuration Data screen, check the box to **Create a new configuration file**. Click **Next**.

   b. When the system prompts you to create a new configuration file, click **Yes**. The Data Collection Tool launches.

   c. Use the information in the Planning forms to enter data for each screen in the DCT. As you progress through the pages, a green check mark (✓) indicates screens with complete and valid information. A red x indicates screens with incomplete or invalid data.

   See the Data Collection Tool online help or its printed version, *Avaya Modular Messaging Data Collection Tool Help* for a complete description of all fields on each screen. The following table maps fields in the Data Collection Tool to the planning forms in Appendix A: System planning forms on page 209.

DCT Field Name	Planning Form Location
Company name	Item 1, Table 14: Modular Messaging System Planning Form on page 213
Organization name	Item 2, Table 14: Modular Messaging System Planning Form on page 213
Time Zone	Not in planning form
Keyboard input language	Not in planning form
Message store	Item 3, Table 14: Modular Messaging System Planning Form on page 213
Contact Information for message store administrator	Item 5, Table 14: Modular Messaging System Planning Form on page 213

DCT Field Name	Planning Form Location
Name (Voice Mail Domain)	Item 6, Table 14: Modular Messaging System Planning Form on page 213
Number of MASs in the VMD	Item 7, Table 14: Modular Messaging System Planning Form on page 213
Connect to corporate network (DHCP or static)	Item 8, Table 14: Modular Messaging System Planning Form on page 213
Subnet mask	Item C3, Table 15: Corporate network planning form on page 216
Full computer name (for MAS)	Item C4, Table 15: Corporate network planning form on page 216
IP address (for MAS)	Item C5, Table 15: Corporate network planning form on page 216
Register DNS suffix in DNS	Item C15, Table 15: Corporate network planning form on page 216
Register IP address in DNS	Item C15, Table 15: Corporate network planning form on page 216
DNS Servers IP addresses, in order of use	Item C6, Table 15: Corporate network planning form on page 216
Search order of DNS domains	Item C7, Table 15: Corporate network planning form on page 216
Default gateway IP address	Item C8, Table 15: Corporate network planning form on page 216
WINS (if required) IP addresses	Item C9, Table 15: Corporate network planning form on page 216
Microsoft Windows domain	Item C10, Table 15: Corporate network planning form on page 216
Peer Exchange server	Item C11, Table 15: Corporate network planning form on page 216
Peer directory server	Item C12, Table 15: Corporate network planning form on page 216
Container if default not used	Item C13, Table 15: Corporate network planning form on page 216
Software installation path	Item C14, Table 15: Corporate network planning form on page 216

DCT Field Name	Planning Form Location
Local administrator accounts names and passwords	Table 18: Modular Messaging logon accounts form on page 221
Technical support name and password	Item A13, Table 18: Modular Messaging logon accounts form on page 221
Customer account name and password	Item A12, Table 18: Modular Messaging logon accounts form on page 221
Announcement languages	Table 19: MAS services and features form on page 224
TTS languages and sessions	Table 19: MAS services and features form on page 224
MM service selections	Table 19: MAS services and features form on page 224
Switch integration	Item 9, Table 14: Modular Messaging System Planning Form on page 213

d. On the last screen, click **complete** and then save the file.

7. After saving the DCT file, click **complete** to continue, which returns you to the MMCW.
8. On the Messaging Application Server Number screen, in the MAS Number field, select the number of the MAS that you are installing and click **Next**.

   The MAS configuration starts, the Sysprep window opens, then the server reboots.
9. After the reboot starts, a Windows Setup wizard runs. To complete the wizard:

   a. On the License Agreement screen, select **I accept this agreement**. Click **Next**.

   b. On the Your Product Key screen, type the Windows product key for this server.

   Note:

   Each Windows computer has a unique product key for the Windows 2003 operating system. Enter the number exactly as shown.

   On a new S3500-family server, the product key sticker is located inside the empty drive tray on the lower-left of the server chassis. You can remove the drive tray to easily read the sticker. Record the Windows product key in Table 23: Windows product keys for MASs on page 228.

c. Click **Next**.

The MMCW proceeds with the installation of the specified MAS based on information contained in the DCT file.

Information contained in the DCT file is validated against the system at this time. This may result in errors that will require you to correct the data in the file or make system corrections and begin the configuration again. If you receive an error, see the screen-specific help for information about field parameters and conditions that may result in errors or warnings.

The progress of the installation is displayed by informational messages on the MMCW screen.

Installing third party software

After the reboot, the MMCW will prompt you to install third party software.

When installing third party software, install the following components:

- Exchange 2003 System Management Tools
- Exchange Server 2003 Service Pack 2
- MSDE install
- Anti-virus software

1. When prompted to install third party software, install the Exchange 2003 System Management Tools.

   Note:

   The Microsoft Exchange 2003 System Management Tools must be installed on any MAS that will have any of the following services installed on it:

   - Messaging Application Server
   - Call Me Server
   - Message Waiting Indicator (MWI) Server.

   Exchange 2003 System Management Tools are required, Exchange 2000 System Management Tools are not supported.

   a. Insert the customer-provided Microsoft Exchange 2003 Server media in the MAS drive.

   b. Install the Management tools by completing the Microsoft Exchange Installation Wizard.

   c. If you receive a compatibility warning, click **Continue**.

   d. For details about this procedure, see the Microsoft Exchange documentation.

2. Follow site-specific procedures to install Exchange Server 2003 Service Pack 2.
3. To install MSDE, complete the following steps:

   a. Insert the Modular Messaging Application media (disk 1) in the MAS DVD drive.

b. In Explorer navigate to the Install\System Upgrade\MSDE directory.

c. Double click on the MSDE.bat file.

d. After the utility runs, close the explorer window.

4. Install anti-virus software that is specified by your local site requirements and implementation. Avaya strongly recommends that you install anti-virus software on any Microsoft Windows computer that runs Avaya Modular Messaging software. For more information about anti-virus software on an Avaya MAS, see Administering anti-virus software on page 87.

Completing the MMCW Configuration

After third party software is installed continue with the following steps to complete the configuration

1. Verify that the *Avaya Modular Messaging Messaging Application Server Software* media (disk 1) is in the MAS DVD drive. Then, click **Continue with installation after installing 3rd party software** on the third party dialog box. The MMCW resumes with the following sequence of events:
   - The Setup screen displays and proceeds directly to the System Upgrade screen.
   - The system reboots without user intervention
   - MMCW restarts automatically and runs the MM Application Setup, installing all MM services
   - After another reboot and auto log on, the MMCW continues the system configuration, displaying informational messages as each component, such as dialogic drivers or remote access is configured.
2. When MAS configuration is complete, the progress bar stretches across the window and the **Next** button becomes active. Click **Next**.
3. On the Modular Messaging Wizard Completed screen, click **Finish**.
4. To complete setup of the Modular Messaging server, proceed to Completing server setup on page 87

Completing server setup

To complete setup of the server complete the following tasks as necessary:

- Administering anti-virus software on page 87
- Installing software updates on page 88
- Updating Microsoft Windows on page 88
- Disable private LAN on page 89
- Configuring port boards if needed on page 89
- Continuing the installation on page 89

When you have completed the procedures required for your system, proceed to Chapter 8: Configuring the voice mail system on page 113

Administering anti-virus software

Avaya strongly recommends that anti-virus software be installed on any Microsoft Windows computer that runs Avaya Modular Messaging software. The type of virus-checking software used and the method of installation depends on customer requirements and the local implementation.

Guidelines for using anti-virus software on a computer that is running Avaya Modular Messaging software include:

- Consider the impact that anti-virus scanning has on the performance of the Avaya messaging servers. Avaya recommends the use of “on-demand” scanning, where scans are run at scheduled intervals. Avoid using a message-scanning method that could drastically impact the performance of the Avaya servers. For example, do *not* use “on access” scanning. This type of scan runs whenever a file changes, and can have a negative impact on server performance.

  Note:

  Some anti-virus software applications default to scan on startup. Disable this feature, or it increases the time that it takes a system to come back online after a reboot.

- Avaya recommends administering the anti-virus software as follows:
  - Scan the hard disk at least once per week during off peak hours. Avaya recommends a daily scan. You can run scans on multiple Modular Messaging servers at the same time. However, avoid scheduling the anti-virus scan at the same time as when a scheduled backup occurs on the MAS.
  - Schedule virus definition updates to occur automatically at least once per week. The updates must occur before the next scheduled scan time to ensure that the latest data

(DAT) files are used during the scan. However, do not schedule updates to occur during a virus scan.

- If the anti-virus software locates a virus, it should first attempt to clean the file. If that fails, the software should move the file to a different directory.

Information about anti-virus interoperability of Avaya Modular Messaging software with various anti-virus products and performance testing is available. The information addresses security issues such as reporting concerns and receiving notifications. For more information, see *Anti-Virus Software on Microsoft Windows-based Avaya Messaging Products.*

Installing software updates

A new Modular Messaging system ships with the most current software that is available at the time. However, the software must be updated after an installation or upgrade to include the latest changes. The updates might be in the form of an Avaya Service Pack (SP) or a software patch (hot fix).

To determine if a Modular Messaging software update is needed:

1. Locate any relevant Avaya software updates on the Avaya Support Web site at http://www.avaya.com/support. For complete steps, see Obtaining software updates from the Web on page 279.

   Note:

   If you followed the procedure for Obtaining software updates on the Web on page 3, you already downloaded any required software updates.

2. If the Modular Messaging system requires a software update, complete the update procedure now before you do acceptance testing. Follow the instructions in Appendix E: Updating Modular Messaging software on page 279 to update the system with the latest changes.

Updating Microsoft Windows

A new Avaya MAS contains the most current Microsoft Windows software at the time it is shipped. After installation, you must install the latest Microsoft Windows system updates, security patches, and hot fixes to protect the operating system from known security weaknesses. Check with the appropriate Windows administrator for the software update procedures to use at this site.

Note:

Avaya technical support representatives must follow their specified internal procedures for verifying the software that is installed. If required, they must update the software with the latest patches as instructed.

Disable private LAN

The Modular Messaging private LAN is not used with the Microsoft Exchange configurations. Disable the LAN by completing the following steps:

1. On the desktop, right click on the **Network Places** icon. Select **Properties**.
2. In the Network Connections window, highlight either **Intel(R) PRO100M Network Connection**, or **Intel(R) 100+ PCI Adapter,** whichever appears in the window. Right click on your selection. From the drop-down list, select **disable**.
3. In the Network Connections window, from the toolbar menu, select **Advanced** > **Advanced Settings**. Verify that the corporate LAN is listed at the top of the list of connections. If not, highlight the name of the corporate LAN and use the arrows to move it up in the list. When finished, click **OK** to close the Advanced Settings window. Close the Network Connections window.

Configuring port boards if needed

The Avaya Modular Messaging Configuration Wizard automatically configures any installed Dialogic port boards for several switch integrations, including:

- Avaya CM (IP SIP)
- Avaya (IP H323)
- Avaya (QSIG)
- Cisco (QSIG)
- Nortel NT M-1 (QSIG)
- Siemens Hipath (QSIG)

If this MAS contains Dialogic port boards that do not use one of the automatic-configuration switch integrations, you must configure the port boards manually.

1. Continue with Appendix D: Configuring and testing port boards on page 263.
2. After you configure and test the Dialogic port boards, continue with Configuring the voice mail system on page 113.

Continuing the installation

When you have finished installing the MAS, you must continue with configuring the voice mail system. See Configuring the voice mail system on page 113.

Chapter 7: Configuring a customer-provided server

This chapter applies only to a customer-provided equipment (CPE) server installation. It describes how to set up a customer-provided server to support Avaya Modular Messaging software or supplementary services.

If you are installing an Avaya S3500 MAS, do not use the procedures in this chapter, see Chapter 6: Configuring a new Avaya MAS on page 77.

> **Note:**
>
> Before you can proceed with the tasks described in this section, a system administrator must have successfully completed the tasks in Chapter 4: Preparing to install Modular Messaging software on page 55.

Topics in this chapter include:

Overview

You can use a customer-provided equipment (CPE) server to support Modular Messaging software and supplementary services. However, you must first configure the server to support Modular Messaging in an Microsoft Exchange environment. To do this, you must complete the following tasks described in this section:

- Prepare the CPE server by configuring a network card and running disk checks. See Preparing the CPE server on page 94.
- Join the server to the Windows domain that will contain the Modular Messaging system. See Joining the Windows domain on page 95
- Adjust the server system values to accommodate Modular Messaging. See Adjusting system values on page 96.
- Add the Modular Messaging customer and technical support accounts to the local administrators group. See Adding Modular Messaging accounts to the local Administrators group on page 97.
- Install and enable required Microsoft Windows software and services. See Installing Windows prerequisite software on page 99.

After completing these steps, the majority of the Modular Messaging server configuration is completed by the Modular Messaging Configuration Wizard (MMCW). The MMCW configures the MAS from information in a site-specific configuration file. This file is created using the Data Collection Tool (DCT). Typically the DCT file is created prior to the installation by the project manager, customer administrator and other experts responsible for the installation. However, the DCT file also can be created at the time of installation by the installer provided the all system planning forms have been completed prior to the start of installation. See, Appendix A: System planning forms on page 209.

See the Data Collection Tool Online Help or its printed version, *Avaya Modular Messaging Data Collection Tool Help*, for a complete description of the procedure and specifications for creating a DCT file prior to an installation.

To successfully set up a customer-provided server, you need:

- A completed Data Collection Tool configuration file, or a completed copy of all the forms in Appendix A: System planning forms on page 209. Required forms are:
  - Modular Messaging System Planning Form on page 213
  - Corporate network planning form on page 216
  - Modular Messaging logon accounts form on page 221
  - MAS services and features form on page 224
  - Switch and messaging information on page 225
  - Support information on page 227

CAUTION:

If using the completed planning forms from Appendix A: System planning forms on page 209 enter the correct values exactly as they are recorded in the forms. Do not guess at the values or use the examples shown in this guide. If you do, the operation of the customer LAN might be damaged.

- All required hardware installed as described in Chapter 3: Installing Dialogic port boards in a customer-provided MAS on page 43.
- A printout of the customer-provided MAS installation checklist. See New Modular Messaging installation on a customer-provided MAS on page 231. Check off steps as you complete them to track your progress.
- The following software from the Avaya Support Web site at http://www.avaya.com/support. For more information about how to access these items on the Web site, see Required documentation and software on page 1.
  - Avaya software updates that are required to bring the Modular Messaging software up to date after an installation. Download this software to a USB storage device. For more information about downloading the updates, see Updating Modular Messaging software on page 279.
  - The latest copy of the Data Collection Tool. Download the DCT update file, **MMDCTDistribute.exe**, from the Avaya support Web site. Download it to a USB storage device. If a DCT file was created for this installation, download the **MMDCTDistribute.exe** to the same USB storage device as the DCT file.
- Customer-provided Microsoft Exchange 2003 System Management Tools
- Microsoft Exchange 2003 Service Pack 2
- Microsoft Windows Service Pack 1, if not previously installed.

Preparing the CPE server

Complete the following procedures to set up this customer-provided equipment (CPE) server to support Avaya Modular Messaging services.

Configuring the network card

For each customer-provided server, you must configure a network card to support a corporate LAN connection.

Use the completed Corporate network planning form on page 216 to assign IP addresses and other TCP/IP properties for the corporate LAN interface that this MAS will use.

CAUTION:
Use the completed planning forms from Appendix A: System planning forms on page 209 to enter the correct values. Do not guess at the values or use the examples shown in this guide. If you do, you can damage the operation of the customer LAN.

Running recommended disk checks

Avaya recommends that the hard disk drive in the server be maintained to prevent possible problems. The system administrator must run the following on a regular basis:

- Disk Defragmenter system tool
- **chkdsk** command

If this server is in service and has not been recently maintained, run the two recommended procedures.

Setting up the server for Modular Messaging

You must set up the customer-provided server to support Modular Messaging software as described in this section.

Joining the Windows domain

You must manually add this server to the appropriate Windows domain for this Modular Messaging system:

1. Switch the monitor to show this server.

   Use whatever method is required at this site to have the monitor display the MAS that you are administering.

2. Log in to the local administrator account for this server:

   a. In the Log On to Windows window, change the user name to the local administrator account name, such as *mas1-admin*. See the Modular Messaging logon accounts form on page 221 for the local administrator account names and passwords.

   b. Enter the password for this account.

   c. If the **Log in to:** field shows a different domain, use the drop-down box to select this server.

   d. Press **Enter** or click **OK**.

3. Right-click **My Computer** and select **Properties**.

4. In the System Properties window:

   a. Click the **Computer Name** tab.

   b. Click **Change**.

5. In the Computer Name Changes window:

   a. Under **Member of**, select **Domain**.

   b. Type the name for the corporate Windows domain. See Item **C10** on the Corporate network planning form on page 216.

   Note:

   Depending on the local configuration, you might need to enter the fully qualified name here. The FQDN is a combination of Items **C2** and **C10** on the Corporate network planning form on page 216.

   c. Click **OK**.

   d. Another Computer Name Changes window might open. If it does:

      1. Enter the name of an account that has permissions to join the Windows domain. You usually use the Modular Messaging customer account, if the domain administrator has set up the account as described in Creating Modular Messaging customer and technical support accounts on page 57. The account name must be in the format ***domain\account name***, such as *domain1\mmacct*.

      2. Enter the password for this account. Click **OK**.

6. If a Welcome to the domain message is displayed, click **OK**.

7. When prompted to restart, click **OK**.
8. Click **OK** to close the System Properties window.
9. If you are prompted to restart the server, click **No**.

Adjusting system values

You must adjust some default values on the server to support Modular Messaging. Verify the following settings, and adjust them if needed:

1. Adjust the values for the Event Viewer:
   a. Right-click **My Computer** and select **Manage**.
   b. In the Computer Management window, in the left pane, expand **Event Viewer**.
   c. Adjust the application log values:
      1. Right-click **Application** and select **Properties**.
      2. On the **General** tab of the Application Properties window, under **Log size**, adjust the following values:
         - Avaya recommends that you set **Maximum log size** to at least 102400 KB.
         - Select **Overwrite events as needed**.
      3. Click **OK** to close the properties window.
   d. Adjust the system log values:
      1. In the right pane, right-click **System** and select **Properties**.
      2. On the **General** tab of the System Properties window, under **Log size**, adjust the following values:
         - Set **Maximum log size** to at least 4032 KB.
         - Select **Overwrite events as needed**.
      3. Click **OK** to close the properties window.
   e. Close the Computer Management window.
2. Right click **Start** and select **Explore**. Adjust File and Printer Sharing properties:
   a. Right-click **My Network Places** and select **Properties**.
   b. In the Network Connections window, right-click **Local Area Connection** and select **Properties**.
   c. In the Local Area Connection Properties window, select **File and Printer Sharing for Microsoft Networks** in the list box. Click **Properties**.
   d. In the properties window, on the **Server Optimization** tab, select **Maximize data throughput for network applications**.

e. Click **OK** to close the properties window.

f. Close the Local Area Connection Properties window.

g. Close the Network Connections window.

3. Adjust the Windows 2003 Server operating system values:

   a. Right-click **My Computer** and select **Properties**.

   b. In the System Properties window, click the **Advanced** tab.

   c. Under **Performance**, click **Settings**.

   d. In the Performance Options window, click the **Advanced** tab.

      1. Under **Processor Scheduling**, select **Background services**.

      2. Under **Virtual memory**, click **Change**.

      3. In the Virtual Memory window, the **Initial size** and **Maximum size** fields for the **Paging file size for sected drive** value vary by machine. Tailor these fields by adding 11 to the default value that is displayed as follows:

         - Under **Paging file size for selected drive**, set both the **Initial size** and **Maximum size** to the default value plus **11** MB.

         - Click **Set**.

         - Click **OK** to close the Virtual Memory window.

      4. Click **OK** to close the Performance Options window.

   e. On the **Advanced** tab of the System Properties window, under **Startup and Recovery**, click **Settings**.

   f. In the Startup and Recovery window, under **System Failure**, verify that the checkbox to **Automatically restart** is checked. Click **OK**.

   g. Click **OK** to close the System Properties window.

Adding Modular Messaging accounts to the local Administrators group

For the accounts to work correctly, you must add the Modular Messaging customer account and the technical support account to the local administrators group:

1. Log in to the local administrator account for this server. For details, see Joining the Windows domain on page 95.

2. Click **Start** > **Control Panel**. In the Control Panel window, double click **Administrative Tools**. In the Administrative Tools window, double click **Computer Management**.

3. In the Computer Management window, under **System Tools**, expand **Local Users and Groups**, and then click **Groups**.
4. Double-click the **Administrators** group in the right pane.
5. In the Administrators Properties window, click **Add**.
6. In the **Enter object names to select** pane, enter the names of the customer account and technical support remote access account. The account names must be in the format ***domain\account name*** (such as *domain1\mmacct*).

   Note:

   You can search for the accounts by entering a portion of the name in the Enter the object names to select pane, and clicking the Check Names button.

   a. After names are entered, click **OK**.
7. Click **OK** to close the Administrators Properties window.
8. Close the Computer Management and Administrative Tools windows.
9. Restart the server before continuing:
   - If you are prompted to restart the server, click **Yes**.
   - If the system does not prompt you, manually restart the server now. For example:
     a. Press **Ctrl** + **Alt** + **Del**, and then click **Shut Down**.
     b. Select **Restart** from the drop-down list and click **OK**.

   The server restarts.

Installing Windows prerequisite software

Microsoft Windows Service Pack 1 (SP1) and specific Windows services must be installed on each customer-provided MAS that will handle voice calls.

Note:

You must install the required Windows software before installing the required Microsoft Exchange software in the next section.

Installing Microsoft Windows SP1

Microsoft Windows Service Pack 1 (SP1) must be installed before you can install the other required Windows services.

SP1 might already be installed on this computer. To verify the service pack version and install an update if needed:

1. Verify the Microsoft Windows service pack version that is installed:
   a. Right-click **My Computer** and select **Explore**.
   b. In Windows Explorer, click **Help** > **About Windows**.
   c. In the version description, verify that Service Pack 1 is installed.
   d. Click **OK** to close this window.
2. If needed, install Microsoft Windows Service Pack 1 on this MAS. Check with the Windows administrator for the appropriate software update procedures to use at this site. For details about this procedure, see the Microsoft Exchange documentation.

Installing and enabling required Microsoft Windows services

You must install and enable the Microsoft Windows services described in this section on this MAS.

- If this MAS will have the Messaging Application Server service installed on it (see MAS services and features form on page 224), you must install and enable the IIS Admin and WWW Server Microsoft Windows services to support Modular Messaging Release 3.
- If you must install the Microsoft Exchange System Management Tools for an Exchange 2000 or 2003 system on this MAS (see Installing and Running the Modular Messaging Configuration Wizard on page 102), you must install and enable the required Microsoft Windows NNTP and SMTP services as described before you install the Microsoft Exchange software.

- If this MAS will have the Messaging Application Server service installed on it, and if Simple Network Management Protocol (SNMP) will be used for alarming at this site (see Support information on page 227), you must install and enable the appropriate Microsoft Windows services to support SNMP.

To install and enable all required Windows services:

1. Log in to an account that has permissions to install software on this computer, such as the local administrator account.
2. Insert the Microsoft Windows Operating System CD in the MAS drive.
3. Click **Start** > **Control Panel** > **Add or Remove Programs**.
4. In the Add or Remove Programs window, in the left column, click **Add/Remove Windows Components**.
5. To install Microsoft Windows services:
   a. In the Windows Components Wizard window, highlight **Application Server**. Click **Details**.
   b. In the Application Server window, verify that the following items show a check mark, or enable them if necessary.
      - Application Server Console
      - ASP.NET
      - Enable COM+ access
   c. In the same window, highlight **Internet Information Services (IIS)**, but do not check the box if the checkbox is clear.
   d. Click **Details**.
   e. In the Internet Information Services (IIS) window, verify that the following items show a check mark:
      - Common Files
      - Internet Information Services Manager
      - World Wide Web Server

   Note:

   The Internet Information Services items listed above are always required. If you plan to install the Microsoft Exchange 2003 System Management Tools, click the checkboxes to select **NNTP Service** and **SMTP Service**. The SMTP Service automatically selects other required components as needed.

   f. In the same window, highlight World Wide Web Server and click **Details**. Verify that World Wide Web Services is checked.
   g. Click **OK** to close the **World Wide Web Service** window.
   h. Click **OK** to close the **Internet Information Services (IIS)** window.

i. Click **OK** a third time to close the **Application Server** window.

6. Install the Windows services to support SNMP:
   a. In the Windows Components Wizard window, highlight **Management and Monitoring Tools** and click **Details**.
   b. In the Management and Monitoring Tools window, click the checkbox to select **Simple Network Management Protocol**. Click **OK**.
7. Complete the wizard to install the selected services.

   Note:

   If the required services were already installed (all the appropriate boxes were checked), click **Cancel** to close the wizard.

8. When the installation is complete, close the Add or Remove Programs window.
9. After the software is installed, enable each installed service as follows:
   a. Right-click **My Computer** and select **Manage**. In the Computer Management window, the left (Tree) pane, expand **Services and Applications**, and then click **Services**.
   b. In the right pane, scroll down to the first new service that you installed. Double-click the service to open the properties window.
   c. In the properties window:
      1. On the **General** tab, verify that the **Startup type** is set to **Automatic**. Set to automatic if it is not.
      2. Click **Apply**.
      3. Under **Service status**, click **Start**.
      4. Wait for service to start, and then click **OK** to close this window.
   d. Repeat Steps b and c to enable each of the services you installed. Note that only a subset of these services might be present on a particular MAS.
10. When all services are enabled, close all open windows.
11. After the required Windows services are installed and enabled, apply any Windows system updates, security patches, and hot fixes to the update the new services. Check with the Windows administrator for the appropriate software update procedures to use at this site.

Installing and Running the Modular Messaging Configuration Wizard

The Modular Messaging Configuration Wizard controls the next steps in the installation process. In installing and running the Modular Messaging Configuration Wizard you must complete the following procedures:

1. Installing and launching the Modular Messaging Configuration Wizard on page 102
2. Selecting or creating a DCT file on page 103
3. Installing third party software on page 107
4. Completing the MMCW Configuration on page 108

Installation procedures for Dialogic drivers and the RealSpeak engine differ if you have chosen to install modular messaging to a drive other than the default C: drive. Differences are described in each procedure. The drive location for the Modular Messaging installation is set in the DCT file.

Installing and launching the Modular Messaging Configuration Wizard

If you have a DCT file already created for this installation, be sure that it is accessible to the MAS that you are installing. In most cases this means inserting a USB storage device with the file into a USB port on the server. If you do not have a DCT file already created, you will be able to create one during the installation when completing step 3 in Selecting or creating a DCT file on page 103.

Complete the following steps to install the Modular Messaging Configuration Wizard:

1. Verifying that the USB storage device with the DCT file and DCT tool update is inserted in the USB port.
2. Turn the server on.
3. Login to the MAS using the Modular Messaging customer account created in Creating Modular Messaging customer and technical support accounts on page 57.
4. Copy the DCT data file from the USB storage device to the C:\Avaya_Support directory. Some servers will not recognize a USB drive after a system restart.To copy the DCT data file to the server:
   a. Navigate to the USB drive, **Removable Disk (E:)**.
   b. Right-click the most current DCT file for this site, such as *sitefile.mmdct*.
   c. Copy the .mmdct file to the C:\Avaya_Support folder.

   d. Verify that the correct DCT file is listed in the C:\Avaya_Support directory.

5. Update the Data Collection Tool. To update the tool:
   a. Navigate to the USB drive, **Removable Disk (E:)**
   b. Copy the **MMDCTDistribute.exe** file from the USB storage device to a folder on the server, such as C:\Avaya_Support.
   c. Double-click the executable file **MMDCTDistribute.exe** and then click **Unzip**.
6. Insert the *Avaya Modular Messaging Messaging Application Server Software* media (disk 1) in the MAS DVD drive.
7. On the DVD drive, navigate to the Install\MISCM directory. Double click the MMConfigurationWizard.msi file. Enable the checkbox that will launch the MMCW. This will install the configuration wizard to the C:\Program Files\Avaya Modular Messaging\Install\MISCM directory.

Selecting or creating a DCT file

Complete the following steps to configure the MAS from the DCT file:

1. On the Modular Messaging Welcome screen, click **Next**.
2. If you have a DCT file already created for this installation, complete the following steps and then proceed to step 4. If you don't have a file go to step 3.
   a. On the Locate Configuration Data screen, highlight the DCT file for this installation. If the file is not displayed, click **Browse** and browse to the directory where the DCT file is stored. By default, the Modular Messaging Configuration Wizard searches the directory for all files with the file type **.mmdct*.
   b. After selecting the DCT file that was created for this installation, click **Next**. You will be prompted to verify the file selection. Click **Yes**, to select the file.
   c. The Data Collection Tool launches with the file you selected. Review and make any necessary changes to the file.
   d. On the last screen, click **complete** and then save the file again if you have made any changes.
3. If you need to create a DCT file from completed planning forms, complete the following steps.
   a. On the Locate Configuration Data screen, check the box to **Create a new configuration file**. Click **Next**.
   b. When the system prompts you to create a new configuration file, click **Yes**. The Data Collection Tool launches.

c. Use the information in the Planning forms to enter data for each screen in the DCT. As you progress through the pages, a green check mark (✓) indicates screens with complete and valid information. A red x indicates screens with incomplete or invalid data.

See the Data Collection Tool online help or its printed version, *Avaya Modular Messaging Data Collection Tool Help* for a complete description of all of the fields on each screen. The following table maps fields in the Data Collection Tool to the planning forms in Appendix A: System planning forms on page 209.

DCT Field Name	Planning Form Location
Company name	Item 1, Table 14: Modular Messaging System Planning Form on page 213
Organization name	Item 2, Table 14: Modular Messaging System Planning Form on page 213
Time Zone	Not in planning form
Keyboard input language	Not in planning form
Message store	Item 3, Table 14: Modular Messaging System Planning Form on page 213
Contact Information for message store administrator	Item 5, Table 14: Modular Messaging System Planning Form on page 213
Name (Voice Mail Domain)	Item 6, Table 14: Modular Messaging System Planning Form on page 213
Number of MASs in the VMD	Item 7, Table 14: Modular Messaging System Planning Form on page 213
Connect to corporate network (DHCP or static)	Item 8, Table 14: Modular Messaging System Planning Form on page 213
Subnet mask	Item C3, Table 15: Corporate network planning form on page 216
Full computer name (for MAS)	Item C4, Table 15: Corporate network planning form on page 216
IP address (for MAS)	Item C5, Table 15: Corporate network planning form on page 216
Register DNS suffix in DNS	Item C15, Table 15: Corporate network planning form on page 216
Register IP address in DNS	Item C15, Table 15: Corporate network planning form on page 216

DCT Field Name	Planning Form Location
DNS Servers IP addresses, in order of use	Item C6, Table 15: Corporate network planning form on page 216
Search order of DNS domains	Item C7, Table 15: Corporate network planning form on page 216
Default gateway IP address	Item C8, Table 15: Corporate network planning form on page 216
WINS (if required) IP addresses	Item C9, Table 15: Corporate network planning form on page 216
Microsoft Windows domain	Item C10, Table 15: Corporate network planning form on page 216
Peer Exchange server	Item C11, Table 15: Corporate network planning form on page 216
Peer directory server	Item C12, Table 15: Corporate network planning form on page 216
Container if default not used	Item C13, Table 15: Corporate network planning form on page 216
Software installation path	Item C14, Table 15: Corporate network planning form on page 216
Local administrator accounts names and passwords	Table 18: Modular Messaging logon accounts form on page 221
Technical support name and password	Item A13, Table 18: Modular Messaging logon accounts form on page 221
Customer account name and password	Item A12, Table 18: Modular Messaging logon accounts form on page 221
Announcement languages	Table 19: MAS services and features form on page 224
TTS languages and sessions	Table 19: MAS services and features form on page 224
MM service selections	Table 19: MAS services and features form on page 224
Switch integration	Item 9, Table 14: Modular Messaging System Planning Form on page 213

d. On the last screen, click **complete** and then save the file.

4. After saving the DCT file, click **complete** to continue.
5. On the Messaging Application Server Number screen, in the MAS Number field, select the number of the MAS that you are installing and click **Next**.

   The MMCW proceeds with the installation of the specified MAS unit based on information contained in the DCT file.

   Information contained in the DCT file is validated against the system at this time. This may result in errors that will require you to correct the data in the file or make system corrections and begin the configuration again. If you receive an error, see the screen-specific help for information about field parameters and conditions that may result in errors or warnings.

   The progress of the installation is displayed by informational messages on the MMCW screen.
6. The MMCW launches the dialogic driver installation for all switch integrations, except IP H.323 or IP SIP. When the MMCW launches the dialogic driver installation wizard, if you are installing Modular Messaging to the default C: drive, complete the wizard by accepting all default values. If you are installing Modular Messaging on an alternate drive, complete the following steps:

   a. Move through the dialogic driver installation wizard until you see the **Choose Destination Location** screen.

   b. On the **Choose Destination Location** screen click **Browse**.

   c. On the **Choose Folder** screen in the **Path:** field, change the letter of the drive to match the drive where Modular Messaging is being installed. This drive is set in the DCT file. Do not browse to find the new location. The path will read ***<drive letter>*:\Program Files\Dialogic.**

   d. Click **Next** and continue to accept default values to complete the wizard.
7. When prompted on the Setup Complete screen, select **No, I will restart my computer later**, and click **Finish**.
8. **Cancel** out of the remote shutdown dialog window.

   The installation continues. After awhile an **Open** window appears with **InstallRSEngine.bat** displayed in the **File name** field.
9. Insert disk 2 of the *Avaya Modular Messaging Messaging Application Server Software* media into the DVD drive to install the RealSpeak engine and languages. Click **Open**.

   The RealSpeak 4.0 InstallShield Wizard starts.
10. If you are installing Modular Messaging to the default C: drive, complete the wizard by accepting all default values. If you are installing Modular Messaging on an alternate drive, complete the following steps:

    a. Move through the RealSpeak installation wizard accepting defaults until you see the **Custom Setup** screen.

b. On the **Custom Setup** screen, highlight RealSpeak Common Components. Click the arrow next to **RealSpeak Common Components** and select **This feature and all subfeatures will be installed on local hard drive**. Click **Change**.

c. On the **Change Current Destination Folder** screen, in the **Folder name:** field change the letter of the drive to match the drive where Modular Messaging is being installed. This drive is set in the DCT file. Do not browse to find the new location. The path will read ***<drive letter>*:\Program Files\ScanSoft\RealSpeak 4.0**.

d. Click **OK** and continue to accept default values to complete the wizard.

11. After the RealSpeak engine is installed, you will be prompted to reboot the system. Choose to reboot.
12. After the system reboots, log in using the customer account, for example mm_acct.
13. Continue with installing third party software.

Installing third party software

When installing third party software, install the following components:

- Exchange 2003 System Management Tools
- Exchange Server 2003 Service Pack 2
- MSDE install
- Anti-virus software

When prompted continue the installation by installing third party software.

1. When prompted to install third party software, install the Exchange 2003 System Management Tools by completing the following steps:

   Note:

   The Microsoft Exchange 2003 System Management Tools must be installed on any MAS that will have any of the following services installed on it:

   - Messaging Application Server
   - Call Me Server
   - Message Waiting Indicator (MWI) Server.

   Exchange 2003 System Management Tools are required, Exchange 2000 System Management Tools are not supported.

   a. Insert the customer-provided Microsoft Exchange 2003 Server media in the MAS drive.

   b. Install the Management tools by completing the Microsoft Exchange Installation Wizard.

   c. If you receive a compatibility warning, click **Continue**.

   d. For details about this procedure, see the Microsoft Exchange documentation.

2. Follow site-specific procedures to install Exchange Server 2003 Service Pack 2.
3. To install MSDE, complete the following steps:
   a. Insert the *Avaya Modular Messaging Messaging Application Server Software* media (disk 1) in the MAS DVD drive.
   b. In Explorer navigate to the Install\System Upgrade\MSDE directory.
   c. Double click on the MSDE.bat file.
   d. After the utility runs, close the explorer window.
4. Install anti-virus software that is specified by your local site requirements and implementation. Avaya strongly recommends that you install anti-virus software on any Microsoft Windows computer that runs Avaya Modular Messaging software. For more information about anti-virus software on the MAS, see Administering anti-virus software on page 110.

Completing the MMCW Configuration

After third party software is installed continue with the following steps to complete the configuration

1. Verify that the *Avaya Modular Messaging Messaging Application Server Software* media (disk 1) is still in the MAS DVD drive. Then, click **OK** on the third party dialog box. The MMCW resumes with the following sequence of events:
   - The Setup screen displays and proceeds directly to the System Upgrade screen.
   - The system reboots without user intervention
   - MMCW restarts automatically and runs the MM Application Setup, installing all MM services
   - After another reboot and auto log on, the MMCW continues the system configuration, displaying informational messages as each component, such as dialogic drives or remote access is configured.
2. When MAS configuration is complete, the progress bar stretches across the window and the **Next** button becomes active. Click **Next**.
3. On the Modular Messaging Wizard Completed screen, click **Finish**.
4. To complete setup of the Modular Messaging server, proceed to Completing server setup on page 109

Completing server setup

To complete setup of the server complete the following task as necessary:

- Installing software updates on page 109
- Setting logging location on page 110
- Administering anti-virus software on page 110
- Configuring port boards on page 111
- Setting up remote access on page 112
- Continuing the installation on page 112

When you have completed the procedures required for your system, proceed to Chapter 8: Configuring the voice mail system on page 113

Installing software updates

A new Modular Messaging system ships with the most current software that is available at the time. However, the software must be updated after an installation or upgrade to include the latest changes. The updates might be in the form of an Avaya Service Pack (SP) or a software patch (hot fix).

To determine if a Modular Messaging software update is needed:

1. Locate any relevant Avaya software updates on the Avaya Support Web site at http://www.avaya.com/support. For complete steps, see Obtaining software updates from the Web on page 279.

   Note:

   If you followed the procedure for Obtaining software updates on the Web on page 3, you already downloaded any required software updates.

2. If the Modular Messaging system requires a software update, complete the update procedure now before you do acceptance testing. Follow the instructions in Appendix E: Updating Modular Messaging software on page 279 to update the system with the latest changes.

Setting logging location

CAUTION:
You must have adequate space on the drive where your logs are located. If you do not, your system may fail to operate correctly. Check the location where your system is recording logs to be sure you don't overrun your allotted space.

You may want to change the default location for recording logs if you do not have adequate space on the default C: drive location. Likewise, if you installed Modular Messaging to a drive other than the default C: drive, the logging location is not automatically changed. In this case you may want to change the location for recording logs to the same drive as the software installation.

To change the location for recording logs, complete the following steps:

1. Navigate to the following location on the drive where Modular Messaging was installed: ***<drive letter>*:\Avaya_Support\Tools**
2. Double-click the **MM_Logging.exe** file.

   The Modular Messaging Verbose Logging Window opens.
3. Complete the following steps for each type of log displayed at the top of the screen with the exception of the **Client**.
   a. Click the log-type button.
   b. In the **Folder for Log Files:** field, edit the drive letter to the drive where you want logs stored. If you have installed Modular Messaging to an alternate drive, edit the field to show the drive where Modular Messaging was installed.
   c. Click **Apply** at the bottom of the screen.
4. When the log location has been changed for all log types, click **Close** at the bottom of the screen.

Administering anti-virus software

Avaya strongly recommends that anti-virus software be installed on any Microsoft Windows computer that runs Avaya Modular Messaging software. The type of virus-checking software used and the method of installation depends on customer requirements and the local implementation.

Guidelines for using anti-virus software on a computer that is running Avaya Modular Messaging software include:

- Consider the impact that anti-virus scanning has on the performance of the Avaya messaging servers. Avaya recommends the use of "on-demand" scanning, where scans are run at scheduled intervals. Avoid using a message-scanning method that could

drastically impact the performance of the Avaya servers. For example, do *not* use “on access” scanning. This type of scan runs whenever a file changes, and can have a negative impact on server performance.

Note:

Some anti-virus software applications default to scan on startup. Disable this feature, or it increases the time that it takes a system to come back online after a reboot.

- Avaya recommends administering the anti-virus software as follows:
  - Scan the hard disk at least once per week during off peak hours. Avaya recommends a daily scan. You can run scans on multiple Modular Messaging servers at the same time. However, avoid scheduling the anti-virus scan at the same time as when a scheduled backup occurs on the MAS.
  - Schedule virus definition updates to occur automatically at least once per week. The updates must occur before the next scheduled scan time to ensure that the latest data (DAT) files are used during the scan. However, do not schedule updates to occur during a virus scan.
  - If the anti-virus software locates a virus, it should first attempt to clean the file. If that fails, the software should move the file to a different directory.

Information about anti-virus interoperability of Avaya Modular Messaging software with various anti-virus products and performance testing is available. The information addresses security issues such as reporting concerns and receiving notifications. For more information, see *Anti-Virus Software on Microsoft Windows-based Avaya Messaging Products.*

Configuring port boards

The Avaya Modular Messaging Configuration Wizard automatically configures any installed Dialogic port boards for several switch integrations, including:

- Avaya CM (IP SIP)
- Avaya (IP H323)
- Avaya (QSIG)
- Cisco (QSIG)
- Nortel NT M-1 (QSIG)
- Siemens Hipath (QSIG)

If this MAS contains Dialogic port boards that do not use one of the automatic-configuration switch integrations, you must configure the port boards manually.

1. Continue with Appendix D: Configuring and testing port boards on page 263.
2. After you configure and test the Dialogic port boards, continue with Setting up remote access on page 112.

Setting up remote access

Remote access allows technical support staff to dial into a system to correct problems and perform routine maintenance. You must provide a method for remote services to access the system. Follow site-specific requirements to set up remote access.

Continuing the installation

When you have finished installing the MAS, you must continue with configuring the voice mail system. See Configuring the voice mail system on page 113.

Chapter 8: Configuring the voice mail system

This chapter describes how to configure the basic Voice Mail System Configuration (VMSC) parameters and complete initial Modular Messaging software administration.

Note:

Before you can successfully complete the tasks described in this section, you must have completed the tasks in Chapter 6: Configuring a new Avaya MAS on page 77, Chapter 7: Configuring a customer-provided server on page 91, or Upgrading Modular Messaging software on an Avaya MAS on page 151. Additionally, if port boards are installed on the MAS and they are not automatically configured by the Modular Messaging Configuration Wizard (MMCW) you must complete the tasks in Appendix D: Configuring and testing port boards on page 263 before configuring the voice mail system. See When to configure port boards on page 263 for a list of automatically configured integrations.

Topics in this chapter include:

Overview

To successfully complete voice mail configuration, you need:

- A completed copy of the forms in Appendix A: System planning forms on page 209, specifically:
  - Modular Messaging System Planning Form on page 213
  - Corporate Network Planning Form on page 215
  - Modular Messaging logon accounts form on page 221
  - MAS services and features form on page 224
  - Switch and messaging information on page 225
  - Support information on page 227
- The configuration notes for this PBX or switch. For instructions on how to obtain these, see Required documentation and software on page 1.

Configuring the voice mail system

Voice mail system configuration falls into three areas:

1. Domain-wide administration that must be done once for each new installation. You usually do these procedures on MAS#1, although you can adjust them later if needed.
2. Administration of domain-wide features that can be installed on any MAS, such as Call Me or Message Waiting Indicator (MWI).
3. Configuration information specific to each MAS, such as INADS alarming or port board administration.

This section guides you through the configuration of key parameters that are required to get a new system operational.

Note:

Complete the tasks in this section to get the Modular Messaging system up and running with the basic required features. After the installation is complete, Avaya encourages customers to tailor the Voice Mail System Configuration (VMSC) parameters for their site. For more information, see the *Avaya Modular Messaging Software Messaging Application Server Administration Guide* (PDF 4 MB), located on the documentation media.

CAUTION:

Some procedures in this section can only be completed by using the required configuration notes for this PBX or switch. For instructions on obtaining the configuration notes, see Required documentation and software on page 1.

Configuring required domain-wide features

This section describes how to configure domain-wide features that are required for each Modular Messaging system. Required features are:

Note:

For a new installation, do these procedures on the first MAS that is installed to ensure the configuration of all required system features. However, with the exception of initial PBX administration, most domain-wide features can be configured on any MAS.

Specifying languages and verifying that service is started

Specify the preferred language and verify that Modular Messaging service is started before you try to configure the voice mail system:

1. Specify the preferred language for this MAS:
   a. Click **Start** > **All Programs** > **Avaya Modular Messaging** > **Languages**.
   b. In the Modular Messaging User Properties window, select the **Preferred language** from the drop-down list.
   c. Click **OK**.
2. Verify that Modular Messaging service is started:
   a. Right-click **My Computer** and select **Manage**. In the Computer Management window, the left (Tree) pane, expand **Services and Applications**, and then click **Services**.
   b. In the right pane, scroll down to **MM Messaging Application Server**.
   c. Check the Status column.
      1. If the status is **Started**, continue with Configuring TUI and access settings on page 116.

         If service is not started, right-click **MM Messaging Application Server** and select **Start**.

         The system starts the messaging service.

      Note:

      When you restart messaging service, the window immediately shows a status of **Started**. However, service might actually take several minutes to start, depending on the number of port boards installed and the integration method.

   d. Track the startup progress as follows:
      1. In the Computer Management window, in the left pane, expand **System Tools**, and then **Event Viewer**.
      2. In the left (Tree) pane, click **Application**.
      3. Refresh the window display periodically until you see Telephony User Interface event 1241, **TUI service has been enabled**. You can then proceed.

Note:

If an FEDB resynchronization occurs, the Modular Messaging system will not accept incoming calls during the FEDB resynchronization.

e. Minimize this window. You will use it later.

Configuring TUI and access settings

You must configure the settings in this section once for each Modular Messaging system.

1. Click **Start > All Programs** > **Avaya Modular Messaging** > **Voice Mail System Configuration**.

   The Voice Mail System Configuration window opens. All MASs present in the messaging system are listed under the voice mail domain.

   Note:

   Do the steps in this section for entries under the voice mail domain, such as *vmdom*. Do *not* click the similar entries for a specific MAS under **Message Application Servers** at this time.

2. Under the voice mail domain name, double-click **Telephone User Interface**.

   a. On the **General** tab, set **Number of Digits in a Mailbox** to match the number of digits in the extension numbers on the customer PBX. See Table 20: Switch and messaging information on page 225.

   b. Click the **Class of Service** tab.

   c. Set up classes of service (COS) for subscribers as follows. See Switch and Messaging Information Form on page 225.

      1. Select the **COS Number**.
      2. Update the **COS Name** to reflect this type of telephone user interface (such as *Aria TUI*, *AUDIX TUI,* or *Serenade TUI*).
      3. Select any required features for this COS and TUI.
      4. Select the appropriate **TUI type** for this COS (*Aria, AUDIX, or Serenade*).
      5. Repeat Steps 1 through 4 to set up multiple COSs. Create at least one class of service for each TUI that will be used at this site.

   Note:

   To set up a mixed environment of Aria, AUDIX, and Serenade TUIs, just assign the appropriate TUI to each COS.

   d. When finished, click **OK** to close this window.

   e. If the system notifies you that the extension number changes will invalidate all previous mailboxes, click **Yes** to continue.

Note:

Although the system prompts you to restart service several times during this procedure, you actually must restart service only as directed in this guide. You must restart service before entering the port board extension numbers in Configuring MAS-specific parameters on page 125. You restart service again at the end, when configuration is complete.

Configuring the broadcast mailbox

Enter a numeric address you will use to send a message to a broadcast list.

Note:

You must complete this procedure on a machine where you have installed the Modular Messaging Active Directory extensions. For information about installing the Modular Messaging extensions, see Adding the Exchange extensions on page 74.

1. Click **Start** > **All Programs** > **Microsoft Exchange**> **Active Directory Users and Computers**.
2. In the Active Directory Users and Computers window, highlight the Windows domain used for Modular Messaging. See Item **C10** (Microsoft Windows domain) on the Modular Messaging System Planning Form on page 213.
3. Select **View** and then select **Advanced Features**.
4. In the right-hand pane, double click **Octel**.
5. In the right-hand pane, double click the **BDL** group.
6. Select the **Modular Messaging** tab.
7. Type the numeric address for the broadcast mailbox.
8. Click **OK** to close the window.

Configuring the PBX type

Note:

When you are upgrading a Modular Messaging system, you must complete the upgrade with the same PBX integration used for the previous release. Changes to the PBX integration can be made following the upgrade.

You must configure the PBX service settings for each Modular Messaging system using the configuration notes.

1. In the Voice Mail System Configuration window, expand the **PBXs** item under the voice mail domain, such as *vmdom*.
2. The Modular Messaging Configuration Wizard automatically configures many settings for the following switch integrations:

- Avaya CM (IP SIP)
- Avaya (IP H323)
- Avaya (QSIG)
- Cisco (QSIG)
- Nortel NT M-1 (QSIG)
- Siemens Hipath (QSIG)

If you are using one of these switch types, the appropriate entry is already listed under **PBXs**. Proceed as appropriate:

- If a PBX type already exists, continue with Step 4.
- If no PBX type is listed, continue with Step 3.

3. Right-click **PBXs** and select **Add New PBX Type**.
   a. For **Telephony Type**, select the type of port board that is installed in this MAS, such as *Dialogic Set Emulation*.
   b. In the PBXs list box, select the type of switch integration that you have, such as *Avaya G3 Set Emulation*.
   c. Click **OK** to close this window.
   d. In the Voice Mail System Configuration window, expand **PBXs**.
4. Double-click the PBX entry under **PBXs**.
5. Using the configuration notes for this PBX or switch, set up the specific PBX parameters required for this integration of the system.

Configuring serviceability settings

You must set up serviceability (alarming) settings once for each Modular Messaging system.

1. In the Voice Mail System Configuration window, double-click **Serviceability**.
2. In the Serviceability - Voice Mail Domain window:
   a. On the **General** tab, select the type of alarming to be used for the Modular Messaging system: INADS, SNMP, or none.

   Note:
   The MAS must have a modem for you to select INADS alarming.

   b. If alarming is activated, enter the unique MAS product ID for this system. For this number, see Support information on page 227.

   Note:
   If Avaya is to support this system, you must enter the product ID that the Avaya Automatic Registration Tool (ART) provides.

c. Unless directed otherwise, you can accept the default values for the following parameters:

- The conditions for sending an alarm notification
- The alarm level at which notification is to be sent: minor or major
- The system behavior for stopping Modular Messaging service

d. *If you selected SNMP alarming,* click the **SNMP** tab. To find out the required values, see SNMP alarming information on page 229.

- For **Network Management Station**, specify the corporate network management system (NMS) that is to monitor the Modular Messaging system for alarm notifications (traps). Type either the IP address or the fully qualified domain name for the NMS in the field. Alternatively, you can click **Browse** to navigate to and select the correct NMS.
- For **Context (community)**, enter the name of the context or community to which the NMS belongs, such as *public*.
- For **Acknowledgement type**:
  - Select **Return trap** to have the system actively acknowledge traps.
  - Select **Ping surround** to send a ping to the NMS before and after the system sends a trap to assume trap receipt.

If you select **Return trap** acknowledgement, you must enable the required Windows service and set it to restart automatically:

1. Restore the Monitor window if you minimized it, or double-click the **Monitor** icon on the desktop.
2. Click **Services (Local)** in the left pane, if the item is not already selected.
3. In the right pane, scroll down to **SNMP Trap Service**. Double-click it to open the properties window.
4. On the **General** tab, set the **Startup type** to **Automatic**.
5. Click **Apply**.
6. Under **Service status**, click **Start**.
7. Wait for service to start, and then click **OK** to close this window.
8. Minimize the Monitor window for later use.

e. Click **OK** to close the Serviceability - Voice Mail Domain window.

Obtaining and installing a license on MAS#1

You must obtain and install a license for each Modular Messaging system.

Note:

You must use Remote Feature Activation (RFA) to obtain a license for all new systems. For the latest information, go to the http://rfa.avaya.com Web site. For complete licensing steps and contact information for RFA assistance, see *Getting Started with RFA for Modular Messaging* on the RFA Web site.

If the Modular Messaging system is being implemented with an Avaya Communication Manager server, and if a T1-QSIG, E1-QSIG, or IP H.323 switch integration is used, the person who requests the Modular Messaging RFA license must also request the QSIG Supplementary Services package. The QSIG Supplementary Services package is an entitlement captured within the Communication Manager RFA license. It must be set to **ON** and uploaded to the Communication Manager server, separate from the Modular Messaging RFA License. Contact your Avaya representative for more information.

Obtaining the license

To obtain a license for this system.

1. An authorized person who is trained and registered must generate a license request for the new system using RFA. The request must include all the required information described in *Getting Started with RFA for Modular Messaging*. The exact procedure varies per location. However, the on-site installer *must* provide the voice mail domain identifier (VMD ID) to complete a license request.
2. You must obtain the unique VMD ID that identifies this particular system to complete a license request. To obtain the VMD ID:
   a. In the Voice Mail System Configuration window, right-click **Licensing** and select **Copy Host ID to clipboard**.
   b. Open the document where you want to record this information. For example, use a text-editor application such as Notepad.

   CAUTION:

   Use the copy-and-paste method of recording the VMD ID if possible. If you try to manually enter the VMD ID, it is easy to make mistakes. The VMD ID in the generated license *must* exactly match that of the target system, or the license fails to install.

   c. Right-click and select **Paste** to copy the VMD ID from the clipboard to the document.
   d. Save the file. For example, save the file into **My Documents** as *mymas1-vmdid.txt*.
   e. Transmit the file that contains the VMD ID to a location that can access the Internet or e-mail location. Use any method that is required, such as FTP, memory stick, and so on.

Send the file to the RFA-authorized party, or use the file yourself to complete the RFA license request through the RFA Web site. Procedures vary per location.

3. The authorized person completes the license request using RFA. The person then downloads or sends the license file by e-mail to the appropriate location.
4. If another party must complete the license request, you can continue with the installation until you receive a valid license file. At that time, return to Installing the license on page 121.

CAUTION:

For most switch integrations, you can continue the installation through acceptance testing using a dummy license that supports up to ten subscribers. For IP SIP integrations, however, you *must* receive and install a valid license before you can add any test subscribers and do acceptance testing.

Installing the license

After the license file is obtained, install the license as follows:

1. Transmit the license file, such as *wlmNNNNNlicense.xml*, to the MAS using the preferred customer method, such as FTP, memory stick, and so on. The recommended location for the license file is on MAS#1 in the C:\Avaya_Support directory.
2. To install the license, in the Voice Mail System Configuration window, right-click **Licensing** and select **Import License**.
3. On the License Import Wizard welcome screen, click **Next**.
4. On the Importing the license screen, click **Browse**.
5. Navigate to the location where the license file is stored, such as *C:\Avaya_Support*.
6. Double-click the appropriate **.xml* license file. If more than one file is present, verify that you select the correct one.
7. Click **Next** to install the license.
8. When the procedure is complete, click **Finish**.

CAUTION:

If an error message states that the license is not valid, you must obtain a new license file. The event log on the MAS on which the license import failed might contain additional information about the failure reason. Verify that the license request contains the correct VMD ID for this system. Return to Step 2 and submit a new license request through RFA.

9. Continue with Verifying license installation and specifying TTS sessions on page 121.

Verifying license installation and specifying TTS sessions

After the license file is installed, verify the license installation. Next, set up the TTS sessions per MAS:

1. In the Voice Mail System Configuration window, double-click **Licensing**.

2. In the Licensing - Voice Mail Domain window, on the **General** tab, verify that the system displays the correct values, according to the license agreement.
3. Click the **Text-to-Speech** tab. Each MAS in the voice mail domain is listed.
   a. For each MAS, double-click the TTS engine to set up, such as **Text to speech, ScanSoft RealSpeak, Any Language**.
   b. In the Edit Sessions window, enter the number of TTS sessions required for this MAS. See Table 19: MAS services and features form on page 224. Click **OK**.
   c. Repeat Step 3 for each licensed TTS engine.
4. Click **OK** to close the Licensing window.

Note:

After you complete the licensing procedure, you must restart service for the changes to take effect.

Configuring specific features as needed

In a multiple-MAS setup, you must spread the Modular Messaging features among the servers in the system to improve performance. To determine what features you must configure for a particular MAS or supplementary server, see Table 19: MAS services and features form on page 224.

Note:

Do the appropriate procedures in this section on each MAS or supplementary server as required.

Tip:

In a multiple-MAS system, configure specific features only after you complete basic configuration of all MASs in the system. Some features, such as MWI, TTS, and offline access to messages, require all MASs in the VMD to be working.

To configure specific features for this MAS:

1. Use the Voice Mail System Configuration program.

   If this window is not already open, click **Start** > **Programs** > **Avaya Modular Messaging** > **Voice Mail System Configuration**.
2. Using Table 19: MAS services and features form on page 224, configure the features that are required for this MAS or supplementary server.
   - Configuring Call Me service on page 123
   - Configuring MWI service on page 123
   - Configuring languages or TTS on page 124
   - Configuring offline access to messages on page 124

Configuring Call Me service

To enable the Call Me Server on this server:

1. Under the voice mail domain, such as *vmdom*, double-click **Call Me**.
2. In the Call Me - Voice Mail Domain window, on the **General** tab, click the checkbox to **Enable Call Me**.
3. For **MAS Call Me server**, specify the MAS on which the Call Me software is installed (such as *MYMAS1*). If this field is blank, type the server name, or:
   1. Click the **...** button next to the field.
   2. In the Select Computer window, double-click the name of the MAS that has Call Me installed (such as *MYMAS1*).
   3. Click **OK** to close this window.

Note:

Because the Call Me server and Message Waiting Indicator (MWI) Server both use the Mailbox Monitor Server, they must be installed on the same MAS.

Configuring MWI service

To enable the Message Waiting Indicator (MWI) Server on this server:

1. Under the voice mail domain, such as *vmdom*, double-click **Message Waiting Indicator**.
2. In the Message Waiting Indicator - Voice Mail Domain window, on the **General** tab, click the checkbox to **Enable Message Waiting Indicator (MWI)**.
3. For **MAS MWI server**, specify the MAS on which the MWI Server is installed, such as *MYMAS1*. If this field is blank, type the server name, or:
   a. Click the **...** button next to the field.
   b. In the Select Computer window, double-click the name of the MAS that has MWI service installed, such as *MYMAS1*.
4. For the **Limit requests** and **Maximum requests per minute** fields, use the values specified in the configuration notes for your PBX integration type.
5. In the **Messaging Application Servers that support MWI** box, list all MASs that have a port group set up to support MWI. To add a server name:
   a. Double-click inside the top of the big list box, or click the **Add** button just above the list box. The **Add** button looks like a dashed box.
   b. The list box displays a data entry field and a **...** button. Click the **...** button.
   c. In the Select Computer window, double-click the name of each MAS that has ports allocated to support MWI, such as *MYMAS1*.
   d. Repeat Steps b and c to add any other MASs that support MWI, such as *MYMAS2*.

e. Click **OK** to close the Select Computer window.

Note:

The arrow icons move the selected MAS up or down the list. MWI requests start with the first MAS in the list, and continue to each additional MAS if needed.

6. Click **OK** to close the Message Waiting Indicator - Voice Mail Domain window.

Configuring languages or TTS

To configure multiple languages or the optional Text-to-Speech feature:

1. Under the voice mail domain, such as *vmdom*, double-click **Languages**.
2. In the Languages - Voice Mail Domain window:
   a. For **Primary Language**, select the primary announcement language (prompt set) that is to be used at this site. See Table 19: MAS services and features form on page 224.
   b. *If the Text-to-Speech (TTS) feature is used at this site:*
      1. Click the checkbox to **Enable Multilingual Text to Speech**.
      2. In the list box, select all the languages to use for TTS at this site. See Table 19: MAS services and features form on page 224.
3. Click **OK** to close this window.

Configuring offline access to messages

CAUTION:

Set up offline access only after all servers in the system are configured, including the supplementary server, if used.

To configure offline access to subscriber messages:

1. Under the voice mail domain, such as *vmdom*, double-click **Messaging**.
2. In the Messaging - Voice Mail Domain window, click the **Offline Access** tab.
3. Click the checkbox to **Enable offline access to messages**.
4. If this system has multiple MASs:
   a. Click the checkbox to **Synchronize offline messages with remote store**.
   b. Click **Browse** to select an existing, shared directory in the domain for the remote offline message store. See Item **10** in Table 14: Modular Messaging System Planning Form on page 213.

   The name must use the format ***\\locationname\sharename***, such as *\\mymas2\OfflineStore*.

5. Alter any other parameters in this window as needed. For more information, see the *Avaya Modular Messaging Software Messaging Application Server Administration Guide* (PDF 4 MB) on the documentation media.
6. Click **OK** to close this window.

Configuring MAS-specific parameters

After the domain-wide parameters are configured, complete the configuration of this specific MAS in the VMSC. Do the procedures in this section under the specific entry for this MAS, and not under the voice mail domain. For a list of MAS names, see Item **C1** in Table 15: Corporate network planning form on page 216.

Note:

Complete the tasks in this section on each MAS as required.

MAS-specific procedures include:

- Configuring INADS alarming, if used on page 125
- Configuring port boards and switch integration on page 126

When you configure some MAS-specific parameters, you will need to select the MAS in the Voice Mail System Configuration window. If the MAS you are configuring does not appear in this window, complete the following procedure:

1. In the **Voice Mail System Configuration** window, click the voice mail domain.
2. Click **Message Application Servers**.
3. Click the **Edit>Add Message Application Server** menu or use the right-click menu. The system displays the **Add New Message Application Server** dialog box.
4. Enter the name of the MAS in the **Message Application Server** field or use the **Browse** button to select it.
5. Click **OK**.

Configuring INADS alarming, if used

If this MAS uses INADS alarming, configure the service now. You must administer INADS alarming individually for each server that uses it. The server requires a modem and the Messaging Application Server service to be installed for INADS alarming to work.

To set up INADS alarming on this MAS:

1. In the Voice Mail System Configuration window, expand **Message Application Servers**. For MAS names, see Item **C1** on the Corporate network planning form on page 216.
2. Expand the entry for this MAS, such as *MYMAS1*.

3. Double-click **Serviceability** to set up dial-out information for this MAS. See INADS alarming information on page 229.
4. In the Serviceability window:
   a. For **COM port**, select the communications port that the modem is to use to make calls for alarm notification. This is usually COM3 on an Avaya MAS if you used recommended USB port A. For more information with an Avaya MAS, see Connecting the USB modem on the MAS on page 41.
   b. For **Phone number**, enter the complete telephone number that the modem must dial to place an alarm notification with the remote service center. Include any special characters needed. For example, to access an outside line, insert pauses, and so on.
   c. For **Modem setup**, enter the modem initialization (setup) string if one is required for the modem to make alarm notification calls.
5. Click **OK** to close this window.
6. When prompted restart service.

Configuring port boards and switch integration

The Modular Messaging Configuration Wizard might have automatically configured many of the port board and PBX settings for this MAS. However, you must always verify the configuration settings against the current configuration notes.

The Modular Messaging Configuration Wizard automatically configures the MAS settings for the following switch integrations:

- Avaya CM (IP SIP)
- Avaya (IP H323)
- Avaya (QSIG)
- Cisco (QSIG)
- Nortel NT M-1 (QSIG)
- Siemens Hipath (QSIG)

If you are using one of these switch types:

1. Verify the MAS settings against the configuration notes in case of changes.
2. Administer all required settings on the switch.

If you specified **Other** for the switch integration type, you must always configure both the MAS settings and the switch settings for each MAS.

Note:

The configuration notes for this PBX or switch might include some of these steps. However, read through this section first to get an overview of the whole configuration procedure. Some of the configuration notes contain some of these steps, while others do not. It does not hurt to repeat steps and verify the setup. You can also update or change this information later if required.

To set up the basic PBX integration details for each MAS in this domain:

1. In the Voice Mail System Configuration window, expand **Message Application Servers**.
2. Expand the entry for this MAS, such as *MYMAS1*. For MAS names, see Item **C1** in Table 15: Corporate network planning form on page 216.
3. Right-click the server name, and then select **Telephony Configuration Wizard**.
4. Complete all steps in the wizard, as prompted. Use the configuration notes as required.
5. After you complete the wizard, you must restart messaging service so you can configure the voice ports:
   a. Restore the Monitor window if you minimized it, or access the window to monitor services using one of these methods:
      - Double-click the **Monitor** icon on the desktop (if present). In the left pane, click **Services** if it is not already selected.
      - Right-click **My Computer** and select **Manage**. In the Computer Management window, the left (Tree) pane, expand **Services and Applications**, and then click **Services**.

   b. Click **Service (Local)** in the left pane, if the item is not already selected.
   c. In the right pane, scroll down to **MM Messaging Application Server**. Right-click it and select **Stop**.
   d. When service is stopped, right-click **MM Messaging Application Server** again and select **Start**.

      The system restarts the messaging service.

      Note:

      When you restart messaging service, the window immediately shows a status of **Started**. However, service might actually take several minutes to start, depending on the number of port boards installed and the integration type.

   e. Track the startup progress as follows:
      1. Access the event viewer using one of these methods:
         - In the Monitor window, in the left pane, expand **Event Viewer (Local)**.
         - In the Computer Management window, in the left pane, expand **System Tools**, and then **Event Viewer**.
      2. In the left (Tree) pane, click **Application**.

3. Refresh the window display periodically until you see Telephony User Interface event 1241, **TUI service has been enabled**. You can then proceed.

Note:

If an FEDB resynchronization occurs, the Modular Messaging system will not accept incoming calls during the FEDB resynchronization.

f. When service is restarted, minimize this window.

6. In the Voice Mail System Configuration window, expand **Message Application Servers**.

Note:

Some values might already be set. Follow the configuration notes for this PBX integration.

a. Expand the entry for the server name (such as *MYMAS1*).

b. Double-click **Telephony Interface**. Configure the port boards in this MAS. Use the configuration notes. For port board extensions, see Table 20: Switch and messaging information on page 225.

c. Double-click **PBX Type**. Select the same type of PBX service as you did in Configuring the PBX type on page 117. Verify that the entry in the **PBXs** box is highlighted, and click **OK**.

d. *If multiple port groups are used,* double-click **Port Groups**. For example, you might use a unique group to support MWI. For more information, see Table 20: Switch and messaging information on page 225.

e. Double-click **PBX Integration** and configure the integration type for this system. Use the configuration notes to specify or confirm the settings this switch integration requires.

Note:

To determine the maximum number of MWI sessions to specify at one time, see MAS Services and Features Form on page 223.

Restarting service

When all configuration for this server is complete, restart messaging service:

1. Restore the Monitor window if you minimized it, or access the window to monitor services using one of these methods:
   - Double-click the **Monitor** icon on the desktop (if present). In the left pane, click **Services** if it is not already selected.
   - Right-click **My Computer** and select **Manage**. In the Computer Management window, the left (Tree) pane, expand **Services and Applications**, and then click **Services**.
2. Click **Service (Local)** in the left pane, if the item is not already selected.

3. For a supplementary server, continue with Step 4. For an MAS, restart messaging service to accept any changes you made in the VMSC:
   a. In the right pane of the Monitor window, scroll down to **MM Messaging Application Server**. Right-click it and select **Stop**.
   b. When service is stopped, right-click **MM Messaging Application Server** again and select **Start**.

      The system restarts the messaging service.

   Note:

   When you restart messaging service, the Monitor window immediately shows a status of **Started**. However, service might actually take several minutes to start, depending on the number of port boards installed and the integration method.

   c. Track the startup progress as follows:
      1. Access the event viewer using one of these methods:
         - In the Monitor window, in the left pane, expand **Event Viewer (Local)**.
         - In the Computer Management window, in the left pane, expand **System Tools**, and then **Event Viewer**.
      2. In the left (Tree) pane, click **Application**.
      3. Refresh the window display periodically until you see Telephony User Interface event 1241, **TUI service has been enabled**. You can then proceed.

   Note:

   If an FEDB resynchronization occurs, the Modular Messaging system will not accept incoming calls during the FEDB resynchronization.

4. Verify that all messaging services required for this MAS are started:
   a. In the Monitor window, click **Services (Local)** in the left pane, if the item is not already selected.
   b. In the right pane, scroll down to the list of Modular Messaging services. All services start with the abbreviation **MM**. Verify that the **Status** column shows the correct state for each messaging service:
      - Services that are required for this server must show **Started** and a startup type of **Automatic**. See Table 19: MAS services and features form on page 224.
      - Services that are not required on this server must show a blank status and a startup type of **Disabled**.

      Complete the following steps if necessary to change the status.

   c. If the **Startup Type** for any **MM** service that is *not* required for this server is **Manual**:
      1. Double-click the service to open the Properties window.
      2. Set the **Startup type** to **Disabled**.

3. Click **OK**.
4. Refresh the screen to verify that all **MM** services *not* required for this server are **Disabled**. Repeat Step c as needed.

CAUTION:

All **MM** services that are *not* required for this server must be set to **Disabled** before you do Step d. Serious problems occur if you activate a service that is supposed to run on only one server in the VMD on multiple servers.

d. If the **Status** for any **MM** service that is required for this server is **Stopped** or blank:

1. Click **Start** > **Run** to open the Run window.
2. In the **Open** field, type the following and press **Enter**:

   C:\Avaya_Support\Scripts\serverrecovery.vbs

   The script takes a few seconds to run. The program sets up all **MM** services correctly.
3. Refresh the screen to verify that all **MM** services required for this server are **Started** and set to **Automatic**.
4. If any **MM** services are not set up correctly, repeat Step d.

5. When configuration is complete, close all open windows.
6. *For a multiple-MAS system,* after you configure the last MAS and install the license file, you must restart service on all servers in the VMD. The following properties require a restart of all servers in the voice mail domain:

   - Languages
   - Licensing
   - Messaging
   - Offline Access
   - PBXs
   - Per MAS features including Telephony Interface, Port Groups, PBX Integrations, PBX Type, and Tracing File Size.

   Note:

   Any feature that you alter in the VMSC that produces a prompt to restart voice service requires a restart of all servers in the VMD. For convenience, you can restart all the MASs in the VMD once at the end of the installation.

   To restart service on all MASs in the voice mail domain:

   a. Switch the monitor to show the next MAS in the system.

   b. Repeat Steps 3 and 4 to restart service.

   c. Repeat this procedure for each MAS in the system.

Verifying basic operation of this MAS

Complete the following tests to verify the basic functionality of this MAS.

- Verifying call-handling capability on page 131
- Verifying alarming setup on page 131
- Verifying Tracing Service operation on page 132

Verifying call-handling capability

Do this task on any MAS that is set up to handle calls.

This test confirms basic connectivity between the MAS and the switch.

1. If this MAS is in a multiple-MAS system, display the port monitor to ensure that the test call comes in on this MAS. For this procedure, see Setting up the port monitor on page 138.
2. From a telephone on the system, dial the message retrieval number for the Modular Messaging system.
3. Listen for the Modular Messaging system to answer.
4. Hang up.

Verifying alarming setup

Do this task on any MAS that is set up for INADS or SNMP alarming. This test will not work if the alarming service is not installed or if alarming is set to **None**. To confirm the serviceability settings used at this site, see Configuring serviceability settings on page 118.

This test requires the receiving computer, either INADS or SNMP, to be set up by the appropriate party and ready to receive alarms.

To verify that alarm notification is working:

1. Click **Start** > **Run**.
2. In the Run window **Open** field, type **cmd** and press **Enter**.
3. In the command prompt window, type the following and press **Enter**:

   testaom -v

   The test shows the type of alarming that is set up (INADS or SNMP), the product ID for the MAS, and the alarming settings. The test takes about 1 minute to run.

4. Verify that the last line of the test reads:

   Alarm origination test successful

   Continue with Step 6.

5. *If the alarm test fails,* the last line of the test reads:

   Negative acknowledgement of transmission

   If the test fails, check your alarming settings, and then run the test again:

   - *For all systems,* see Configuring serviceability settings on page 118.
   - *For systems that use INADS,* also check Configuring INADS alarming, if used on page 125.

6. Type **exit** and press **Enter** to close this window.

   Note:

   For instructions on accessing the MAS alarm or error logs, see the *Avaya Modular Messaging Software Messaging Application Server Administration Guide* (PDF 3 MB) on the documentation media.

Verifying Tracing Service operation

If you enabled the Tracing Server software on an MAS or a supplementary Tracing server, test the Tracing System operation as follows:

1. Click **Start** > **Programs** > **Avaya Modular Messaging** > **Operational History Viewer**.
2. Set up a live mode session for all MASs in the voice mail domain (VMD):
   a. In the history viewer window, click **File** > **New**.
   b. In the Session Properties window, verify that **Message Application Server** shows **All Servers** is selected.
   c. Click the checkbox for **Live Mode**.
   d. Verify that all the **Select Types** checkboxes are checked.
   e. Under **Selection Activities**, verify that the **All Activities** checkbox is checked.
   f. Click **OK**.
3. Confirm that the Tracing Server can connect to all MASs in the VMD.
4. Confirm that the Operation History (OPH) viewer displays the collected OPH events.
5. You can close the OPH Viewer, or keep it open to monitor acceptance tests. For more information, see Using the Operational History Viewer on page 138.
6. If you close the OPH Viewer, the system might prompt you to save the session. Click **No**.

Note:

For more information about using the Operation History Viewer, see the *Avaya Modular Messaging Software Messaging Application Server Administration Guide* (PDF 4 MB) on the documentation media.

Continuing the installation

If you have additional MASs to configure return to Configuring a new Avaya MAS on page 77 or Configuring a customer-provided server on page 91.

If you have configured all MASs, continue to Testing and backing up the system on page 135.

Chapter 9: Testing and backing up the system

This chapter describes how to perform acceptance tests to verify that the Modular Messaging system is providing full service. After functionality is verified, back up the system to protect the Modular Messaging configuration data.

Note:

Before you can successfully complete the tasks described in this section, you must have successfully completed the tasks in Chapter 8: Configuring the voice mail system on page 113.

Topics in this chapter include:

Adding a test subscriber

For a new installation, the directory server administrator previously created test subscriber accounts for each telephone user interface. See Creating test subscriber accounts on page 61. Before you can complete the acceptance tests, the administrator must assign Modular Messaging characteristics to these accounts.

Note:

If you are performing tests following a Modular Messaging software upgrade, you might want to test the system using subscribers that are already administered.

For details on administering Modular Messaging features, see Chapter 15, “Creating subscriber accounts for Microsoft Exchange," in the *Avaya Modular Messaging Software Messaging Application Server Administration Guide* (PDF 3 MB) on the documentation media.

Complete the following sets to set up the test subscribers.

1. Log in to the Active Directory server using an account that has privileges to create new user accounts (such as *administrator*).

   Note:

   The Modular Messaging Active Directory Extensions must have been installed on the server before you can administer any subscribers. For additional information about the Modular Messaging Extensions, see Adding the Exchange extensions on page 74.

2. Click **Start** > **All Programs** > **Microsoft Exchange**> **Active Directory Users and Computers**.
3. In the Active Directory Users and Computers window, expand the directory for the Windows domain you used for Modular Messaging. See Item **C10** on the Table 15: Corporate network planning form on page 216.
4. In the left pane, click **Users**.
5. In the right pane, double-click a test subscriber account, such as *Aria Test Subscriber (testsub1),* to open the properties window.
6. Click the **Modular Messaging** tab.

   Note:

   The first time you access this tab, you might see a Choose Message Application Server window. Enter the name of an MAS (or click **Browse** to select it), and then click **OK**.

   There might be a delay as the server logs in.

7. Set up the test subscriber with Modular Messaging features as follows:

   a. Click the checkbox to **Enable Modular Messaging**.

b. Verify the voice mail domain (VMD). See Item **6** on the Table 14: Modular Messaging System Planning Form on page 213.

c. Enter the extension number, mailbox number, numeric address, and TUI password. See Mailbox and subscriber information on page 226.

Note:

The numeric address must be unique among all the addresses in the messaging network. For example, you could prepend a **1** or the area code to the mailbox number.

All extensions for the test subscribers must be administered on the PBX by the appropriate party. See Mailbox and subscriber information on page 226.

d. Click **Advanced**. In the Advanced Properties window:

1. Select the appropriate **Class of service** for this test subscriber (for example, *Aria TUI*, *AUDIX TUI, or Serenade TUI*).
2. In the **Capabilities** list box, under **Message assistant**, click the checkbox to **Allow Message Waiting Indicator**.
3. Click the appropriate checkboxes to activate any other features that you have installed and must test at this site.
4. Click **OK** to close the Advanced Properties window.

e. When finished setting up this test subscriber, click **OK**.

8. To set up another test subscriber (for example, to test the MM AUDIX or MM Serenade telephone user interface), repeat Steps 5 through 7.

9. Although Message Waiting Indicator has been allowed, it must also be enabled for each test subscriber.

a. Right-click **My Computer** and select **Manage**.

b. In the Computer Management window, in the left pane, expand **Event Viewer**.

c. Refresh the window display periodically until you see a **1027** event. You must see the 1027 event before you can proceed.

d. In the Active Directory Users and Computers window, double-click the first test subscribers.

e. Select the **Modular Messaging** tab.

f. On the Modular Messaging tab, click **User Options**.

g. In the Assistant window, click the **Message Waiting Indicator** box and the box for any other capabilities that you have previous activated and that you intend to test.

h. Click **OK** to close the window.

i. Repeat steps d through h for each test subscriber.

10. When finished, close the Active Directory Users and Computers window.

Setting up monitoring tools—optional

You can use the monitoring aids described in this section to help you complete the acceptance tests.

Using the Operational History Viewer

You can use the Operational History Viewer to monitor call progress for any MAS. The viewer can help to identify the cause of the problem if errors occurs during testing.

To open the Operational History Viewer:

1. Click **Start** > **Programs** > **Avaya Modular Messaging** > **Operational History Viewer**.
2. Set up a live mode session for all MASs in the voice mail domain (VMD):
   a. In the history viewer window, click **File** > **New**.
   b. In the Session Properties window, verify that **Message Application Server** shows **All Servers** is selected.
   c. Click the checkbox for **Live Mode**.
   d. Verify that all the **Select Types** checkboxes are checked.
   e. Under **Selection Activities**, verify that the **All Activities** checkbox is checked.
   f. Click **OK**.
3. During testing, monitor Operation History (OPH) events in the OPH Viewer. The OPH Viewer displays events as they happen on the system.
4. After testing is complete, close the OPH Viewer.
5. If the system prompts you to save the session, click **No**.

Setting up the port monitor

This task is optional for a one-MAS system, but is recommended for a system that has multiple MASs that are set up to take calls.

Tests calls can come in through the ports on various MASs in the system, depending on how the hunt group is set up on the PBX. If the Modular Messaging system has more than one MAS, use the port monitor to verify that the test calls you make are coming in on the ports of the MAS that you want to test.

To display the port monitor:

1. Click **Start** > **All Programs** > **Avaya Modular Messaging** > **Port Monitor**.

2. When the system prompts for the Message Application Server, select the MAS that you want to test (such as *MYMAS1*). Click **Select**.

   The Port Monitor window for this MAS is displayed.

3. You can repeat Steps 1 and 2 to bring up Port Monitor windows for multiple MASs if desired.
4. When you dial the Modular Messaging system message retrieval number during the acceptance tests, check the Port Monitor window to verify that the call is coming in on a port of the MAS that you want to test.
5. If the Port Monitor does *not* show that the test call is coming in on the desired MAS, hang up and dial the Modular Messaging system message retrieval number again.

   The number of times you might have to dial depends on the switch administration. For example, the hunt group might be administered to send each new call to the next MAS in the system, or it might be administered to send all the calls to one MAS before it moves on to a subsequent MAS.

Performing acceptance tests

Complete the following tests on each MAS that is set up to handle calls.

CAUTION:

Wait 5 minutes after completing the tasks in Chapter 8: Configuring the voice mail system on page 113 to give the system time to update all servers in the voice mail and Windows domains with the correct Modular Messaging information.

Creating and sending a call answer message

The following test works only if call-coverage has been assigned on the switch to route unanswered calls to the extension for the test subscriber.

To create and send a call answer test message:

1. Call the MM Aria test-subscriber extension from any other telephone. Allow the Modular Messaging system to answer.
2. Speak into the telephone and record the following or a similar test message after the tone:

   "This is a test call answer message."
3. Hang up the telephone to disconnect.
4. Repeat Steps 1 through 3 for each TUI that you are testing.

Retrieving test messages in integrated mode

Test the fully integrated operation of the system as directed. You need access to the actual telephone whose extension number is assigned to the test-subscriber mailbox to perform this test.

To verify the receipt of the test messages in integrated mode:

1. *If MWI is installed:* Check the message waiting indicator (MWI) on the test-subscriber telephone. The MWI can be a light, a screen display, or a dial-tone stutter that you hear when you pick up the phone.

   Note:

   The message-waiting lamp might take up to 1 minute to light on the appropriate telephone after a test message is sent.

   If the MWI does not indicate that a call was received:

a. Verify that the Mailbox Monitor and MWI services are started.

   1. Access the window to monitor services using one of these methods:

      - Double-click the **Monitor** icon on the desktop (if present). In the left pane, click **Services** if it is not already selected.
      - Right-click **My Computer** and select **Manage**. In the Computer Management window, the left (Tree) pane, expand **Services and Applications**, and then click **Services**.

   2. In the right pane, scroll down to the Modular Messaging (MM) services. Verify that the Status column shows that service is **Started** for each installed messaging service.
   3. If service is stopped or if the Status column is blank, right-click the appropriate MM service and select **Start**.
   4. When finished, close this window.

b. If service is started, check for a problem with the test subscriber administration, the switch integration or switch integration software, or the switch number administration for the test telephone.

2. From the test-subscriber telephone, dial the Modular Messaging system message retrieval number.
3. Enter the password for this mailbox and press #

   The system voices the name of the test subscriber.
4. The first time you access this mailbox, you answer a series of prompts to set up the mailbox for operation. Answer all voice prompts as directed.
5. After the mailbox is set up, retrieve the test message.

   The system uses different commands to retrieve messages depending on whether you are using the Aria or AUDIX user interface.

To retrieve a test message using the MM Aria interface:

1. After the mailbox is set up:

   a. Press **1** to review the new messages.

   b. Press **1** to retrieve a voice message.

   c. Listen to the message. If the message does not play properly, contact the remote support center.

   d. Press **7** to erase this message.

   e. Repeat Steps c and d to review the next message (if any), or press ***** to return to the main menu.

2. Hang up the telephone to disconnect when finished.
3. If MWI is installed, check the MWI on the test-subscriber telephone. The MWI should be off. If it is not off, check the MWI administration on the MAS and the PBX.

To retrieve a test message using the MM AUDIX interface:

1. After the mailbox is set up:
   a. Press **2** to review the new messages.
   b. Press **0** to listen to the test message. If the message does not play properly, contact the remote support center.
   c. Press *** D** (or *** 3**) to erase this message.
   d. Repeat Steps b and c to review the next message (if any), or press *** R** (or *** 7**) to return to the main menu.
2. Hang up the telephone to disconnect when finished.
3. *If MWI is installed:* Check the MWI on the test-subscriber telephone. The MWI should be off. If it is not off, check the MWI administration on the MAS and the PBX.

To retrieve a test message using the MM Serenade interface:

1. After the mailbox is set up:
   a. Press **5** to review the new messages.
   b. Listen to the test message. If the message does not play properly, contact the remote support center.
   c. Press **3** to erase this message.
   d. Repeat Steps b and c to review the next message, if any.
   e. Press the pound key (**#**) to return to the Ready menu.

Creating and sending a test message in nonintegrated mode

The system uses slightly different commands, depending on the telephone user interface you have. Differences are noted in the text.

To create and send a test message in nonintegrated mode:

1. Dial the Modular Messaging system message retrieval number from any telephone that is not administered on the system.

   The system voices the "Welcome to Avaya Messaging" prompt.
2. Press **#** to skip the system introduction.
3. Enter the extension number for test-subscriber mailbox.
4. Enter the password for this mailbox and press **#**.

   The system voices the name of the test subscriber.
5. To create a new message:

- On the MM Aria interface, press **2**.
- On the MM AUDIX interface, press **1**.
- On the MM Serenade interface, press **6**.

6. Speaking into the telephone, record the following or a similar test message after the tone: "This is a test voice mail message."
7. Press **#** to approve the message.
8. When the system prompts you, enter the mailbox number for any other test subscriber when prompted for the extension. Then press **#**.

   The system voices the name of the test subscriber.
9. To approve the message and address list:
   - On the MM Aria interface, press **#** twice (as prompted).
   - On the MM AUDIX interface, press **#**.
   - On the MM Serenade interface, press the pound key (**#**) twice.
10. Press **#** again to send the test message to the test-subscriber mailbox.
11. Hang up the telephone to disconnect.
12. Retrieve the message as described in Retrieving test messages in integrated mode on page 140.

Testing the outcalling capability

Test the outcalling capability of the system using the Modular Messaging (MM) Client software, also known as the Avaya Modular Messaging Subscriber Options package.

To test system outcalling:

1. Run this test from any machine where the Subscriber Administration extensions are installed. For details, see Adding the Exchange extensions on page 74.
2. Click **Start** > **All Programs** > **Microsoft Exchange**> **Active Directory Users and Computers**.
3. In the Active Directory Users and Computers window, expand the directory for the Windows domain you used for Modular Messaging. See Item **C10** on the Table 15: Corporate network planning form on page 216.
4. In the left pane, click **Users**.
5. In the right pane, double-click a test subscriber account and open the properties window. For complete steps, see Steps 3 through 5 in Adding a test subscriber on page 136.
6. Click the **Modular Messaging** tab.

Note:

The first time you access this tab, you might see a Choose Message Application Server window. Enter the name of this MAS (or click **Browse** to select it), and then click **OK**.

There might be a delay as the server logs in.

7. Click **User Options** to run the Modular Messaging client software.
8. Click the **Media Setup** tab.
9. Set up the recording and playback options to use a telephone near you:
   a. For **When composing voice messages**, select **Telephone**.
   b. Click **Configure**.
   c. In the Telephone Properties window, enter the extension number of a telephone near you.
   d. Select or enter the name of this MAS if needed. Click **OK**.
   e. For **When reviewing voice messages**, select **Telephone**.
   f. Repeat Steps b through d to set up telephone playback.
10. Verify that a name is recorded, and record one if needed. For example:
    a. *On an Exchange 2000 or 2003 system:* In the Modular Messaging User Properties window, click the **Record Greetings** tab.
    b. Verify that the telephone will be used for recording and playback:
       1. Check the icon to the left of the status display. If it shows a telephone, continue with Step c.
       2. If the icon shows a terminal, right-click and select **Telephone**. The icon changes to show a telephone. Continue with Step c.
    c. Under Standard Greetings, select **Spoken Name**.
       - If a green indicator is displayed next to this option, a name is already recorded. Go to Step 11.
       - If a name is *not* recorded:
       1. Click **Record** (the red circle) on the player near the bottom of the window.
       2. When the telephone rings, answer it and record a name for the test subscriber after the tone.
       3. When finished, click **Stop** (the black square) on the player.
       4. Click **OK**.
11. Play back the spoken name to test outcalling, as follows:
    a. Click the **Play** button (large black single arrow) on the player near the bottom of the window.

b. Answer the telephone when it rings.

   The picture of the phone changes to become off-hook.

c. Listen for the system to play the spoken name of the test subscriber.

d. Hang up the telephone.

   The picture of the phone changes back to being on-hook (this might take a couple of seconds).

e. Click **OK** to close the Modular Messaging User Properties window.

12. When finished, close all open windows.

Running additional tests

You might want to run additional tests to verify the correct operation of features that are particularly important to the customer. For example:

- Automated Attendant
- Call Me
- Find Me
- Octel Analog Networking

To test these or other features, see the *Avaya Modular Messaging Software Messaging Application Server Administration Guide* (PDF 3 MB) on the documentation media for feature setup and operation instructions.

Removing the test subscribers

When acceptance testing is complete, remove any test subscribers using the normal procedures for this version of Microsoft Exchange. For example:

1. Log in to the directory server using an account that has privileges to delete user accounts (such as *administrator*).
2. Access Active Directory Users and Computers.
3. Expand the directory for the Windows domain you used for Modular Messaging.
4. In the left pane, click **Users** or **Recipients** as required.
5. In the right pane, right-click each test subscriber and select **Delete**.

Verifying creation of external caller objects

Complete the following procedures to validate proxy addresses and mailbox rights.

Validating proxy addresses

To validate proxy addresses:

1. Log in to the Active Directory server.
2. Click **Start** > **All Programs** > **Administrative Tools** > **Active Directory Users and Computers**.
3. In the Active Directory Users and Computers window, select A**dvanced Features** from the **View** menu.
4. Double-click the **Octel** container.
5. In the right-hand panel, double-click **ExternalCaller**.
6. Select the **Email Addresses** tab.

   You should see at least an SMTP proxy address defined for the object.
7. If a proxy address is not defined:
   - If you know the exact value, enter it here by clicking **New**, selecting a type, and entering an address.
   - If you do not know the exact value, use the Exchange tasks wizard to fix the mailbox.

Validating mailbox rights

To validate mailbox rights:

1. Log in to the Active Directory server.
2. Click **Start** > **All Programs** > **Administrative Tools** > **Active Directory Users and Computers**.
3. In the Active Directory Users and Computers window, select A**dvanced Features** from the **View** menu.
4. Double-click the **Octel** container.
5. In the right-hand panel, double-click **ExternalCaller**.
6. Select the **Exchange Advanced** tab.

7. Click the **Mailbox Rights** button.

   The ACL displayed should contain the inherited rights from the Exchange message store where the mailbox is located. If it contains the single ACE for the SELF identity, the mailbox creation is not complete. In this case:

   - Wait for the mailbox creation to complete
   - Or, log on to the user object and use Outlook to prompt the Exchange server to populate the ACL.

Backing up the system

As a final installation task, set up the system to perform regular, scheduled backups of MAS-specific information using the normal backup procedures for this site. Avaya recommends that you do an attended backup now on each MAS to preserve the configuration information and to verify the backup function.

Customers should consider the following when designing their backup program:

- *DCT file*: Be sure to include the most recent DCT file in your regular backups. Periodically analyze your system with the Data Collection Tool, to create a new updated file to use in case of a disk failure. This is particularly important when changes are made to the Modular Messaging system. See the Data Collection Tool Online Help or its printed version, *Avaya Modular Messaging Data Collection Tool Help*, for a complete description of the procedure to analyze a system with the DCT.
- *Customized Tone Files*: If analog port boards are installed in any MAS and you have created customized tone files, keep a copy of the tone files (*.tsf for Dialogic boards) in a network location where they are part of the normal backup procedure. Avaya suggests that all tone files be stored in the \Avaya_Support\Tone_Files directory. You might choose to back up this location or store a copy of the tone files elsewhere for backup.
- *Customized Prompt Files:* Keep a copy of customized prompt files stored in the CustomPrompts.ovf and CustomPrompts_G711.ovf files. The files are stored in the path c:\program files\avaya modular messaging\vserver.
- *Caller Applications:* Caller Applications (*.uma files), once deployed, are stored on each MAS within a folder that has a GUID. The location for this folder is \Program Files\Avaya Modular Messaging\VServer\CallerApps. Avaya recommends that you back up a copy of this folder as follows:

  Deployed caller applications cannot be backed up using NTBackup while the Modular Messaging (MM) Messaging Application Server service is running. However, you can make a copy of the CallerApps folder while this service is running, and then make a backup of that (you could choose to create scripts to carry out this function).

- *Licensing Files:* Keep a backup of the licensing files (*.xml) safe on another device or in another location.
- *System State:* Avaya suggests that you back up the system state of each MAS on a regular basis. The registry contains settings particular to this MAS.
- *SIP certificates :* For SIP implementations only, backup certificates and related files. From \Program Files\Avaya Modular Messaging\OpenSSL, backup the following files:
  - AVA\dh1024.pem, certchain.crt, and certchain.key
  - CommonTrust\AvayaRoot\avayaprca.crt and sip_product_root.crt.
  - CommonTrust\CaHash\465bb314.0 and ffbc7d70.0
- *WSO:* Backup \Program Files\Avaya Modular Messaging\Web Subscriber Options\masinfo.cfg.
- *Spool:* The directory \Program Files\Avaya Modular Messaging\Vserver\Spool stores messages that are sent while the MAS is offline from the message store. You should back up the Spool directory on each MAS.

Running periodic checks

Perform scheduled maintenance on the MAS routinely to keep the hard disk in good condition. Run the following on a regular basis:

- Disk Defragmenter system tool
- **chkdsk** command

Turning over the system to the customer

At this point, the system is considered ready for handoff to the customer. Handoff considerations include:

1. Update and turn over the planning information and DCT data file:
   a. Ensure that the planning forms accurately reflect the information on the system. Make a copy for the project planner and the organization that is to remotely support the system. Return the planning forms to the customer to be filed in a safe place.
   b. Send a copy of the DCT data file to the appropriate technical support group. Afterwards, erase the copy of the DCT data file from your USB storage device.
2. Advise the customer about the initial administration that was completed. The customer might want to customize features such as:
   a. Any feature parameters in the Voice Mail System Configuration (VMSC) program.
   b. The classes of service to use for subscribers might need to be updated or expanded.
3. Advise the customer about the ongoing administration that is required, such as customizing parameters, installing client packages, and maintaining the system. For more information, direct the customer to the administration topics on the documentation media.

The system is set up to send alarming information and receive incoming technical support calls. Customers who do not want this service in place must disconnect the USB modem from the MAS.

Chapter 10: Upgrading Modular Messaging software on an Avaya MAS

This chapter describes how to upgrade an Avaya MAS that is running Modular Messaging Release 1.1 software to Modular Messaging Release 3 software.

Note:

Complete the tasks in this section only if you are upgrading a system that is running Modular Messaging Release 1.1 software.

Any systems that are running Unified Messenger Release 5.0 software must upgrade to Modular Messaging Release 1.1 software before upgrading to Modular Messaging Release 3 software.

Topics in this chapter include:

Overview

This chapter describes how to upgrade a Modular Messaging system that is running Modular Messaging Release 1.1 software to Modular Messaging Release 3.

Note:

A Modular Messaging software upgrade requires several server restarts. Plan to do the software upgrade during low-usage hours.

To upgrade the system to Modular Messaging Release 3:

1. Review the configuration notes for any changes that might be needed in the areas of board configuration, switch programming, and application configuration. For more information, see Upgrade requirements on page 153.
2. Complete tasks to save data and busy out ports. For more information, see Completing pre-upgrade tasks on page 155.
3. Analyze each MAS that will be upgraded using the Data Collection Tool. Include in the analysis any S3400 MASs that will be replaced with S3500 MASs. For more information, see Creating a Data Collection Tool File on page 156 for details.

   Note:

   If you are replacing Brooktrout boards with new Dialogic port boards, you must replace the boards before you analyze the MAS.

4. Prepare the MAS for the upgrade by installing a replacement disk drive or reloading the boot image software. For more information, see Preparing the MAS for the upgrade on page 162. If you are replacing an S3400 server with an S3500 server, see Upgrading to an S3500 server on page 182.
5. Upgrade the software on each MAS and configure new features as needed. For more information, see detailed steps in Upgrading Modular Messaging Software on page 174

   Note:

   Completely upgrade and test one MAS first, and let it run for 15 minutes before upgrading any additional MASs. The MASs can be upgraded in any order.

6. Update the client software and the Exchange extensions on each MAS and any other computer where Modular Messaging was previously installed (such as administrator machines or the Exchange server). See detailed steps in Completing the upgrade on page 177 and Updating client software on page 185.

   Note:

   Schedule downtime for the Microsoft Exchange server if the Exchange extensions must be updated. See Chapter 5: Adding Exchange extensions for Modular Messaging on page 71.

7. Perform acceptance tests on the entire system. See Completing the upgrade on page 177.

8. Back up the new data. See Completing the upgrade on page 177.

Because an upgrade includes many steps, print the upgrade checklist from Appendix B: Installation and upgrade checklists on page 231 and use it to track your progress.

CAUTION:

All servers must meet the requirements listed in the *Avaya Modular Messaging Concepts and Planning Guide* (PDF 2 MB), available on the documentation media shipped with the system. Review this document to verify that all Exchange servers, directory servers, MASs, and client machines are ready to support Modular Messaging software.

Considerations for multiple-MAS upgrades

In a multiple-MAS configuration, Avaya strongly recommends that all MASs that are running Release 1.1 software be upgraded to Modular Messaging Release 3 software as soon as possible. During an upgrade MASs in the same Voice Mail Domain can run different releases of Modular Messaging. However, at the completion of an upgrade, all MASs in the Voice Mail Domain must be running release 3.

All MASs in the voice mail domain must be upgraded to the same release of Modular Messaging software before you can enable the new Release 3 features.

If you are adding a new Modular Messaging machine to a multiple-MAS configuration, it cannot join an existing voice mail domain that only has Release 1.1 voice servers in it. You must first upgrade one or more of the existing servers, leave the system running for at least 15 minutes, and then add the new Avaya Modular Messaging server.

Upgrade requirements

To successfully upgrade a system to Modular Messaging Release 3, you need:

- One of the following:
  - A replacement hard disk drive with preloaded Avaya Modular Messaging Application Server (MAS) and boot software.
  - If a replacement drive is not available, the *Avaya Modular Messaging Avaya Messaging Application Server and Boot Software for Microsoft Exchange* media
- Release 3 of the Modular Messaging application software.
  - *Avaya Modular Messaging Messaging Application Server Software* media
  - *Avaya Modular Messaging Documentation*

- The following information and software from the Avaya Support Web site at http://www.avaya.com/support. For more information about how to access these items on the Web site, see Required documentation and software on page 1.
  - The most current copy of the configuration notes for this switch integration.
  - Avaya software updates that are required to bring the Avaya Modular Messaging software up to date after an upgrade. Download this software to a USB storage device. For more information about downloading the updates, see Updating Modular Messaging software on page 279.
  - The latest copy of the Data Collection Tool. Download the DCT update file, **MMDCTDistribute.exe**, from the Avaya support site. Download it to a USB storage device.
- A completed copy of all relevant forms in Appendix A: System planning forms on page 209 and a printed copy of the upgrade checklist for an Avaya MAS. See Modular Messaging upgrade on an Avaya MAS on page 247.

  Note:

  For Release 1.1 upgrades, a completed copy of the planning forms should be on file from the previous installation. For all upgrades, review the new version of the forms in Appendix A: System planning forms on page 209 before beginning the software upgrade. Verify that all fields required for any new Release 3 features are completed.
- Modular Messaging Release 3 requires Microsoft Exchange 2003 System Management Tools. If you need to upgrade your Microsoft Exchange System Management Tools at this time, you will require a copy of the customer-provided Microsoft Exchange 2003 media or equivalent access to the 2003 System Management Tools upgrade and the Microsoft Exchange 2003 Service Pack 2.

Switching the monitor to show the correct server

Use whatever method is required at this site to have the monitor display the Avaya MAS that you are installing.

For an 8-port Belkin KVM: the KVM switch is usually connected to the first Avaya MAS (MAS#1) through the first computer port (VGA 01). Subsequent MASs (if present) are connected to computer ports VGA 02, VGA 03, and so on.

To show a different server on the monitor:

1. Slowly press **Scroll Lock**, then **Scroll Lock** again, and then the up (or down) arrow key to change to the server connected to a higher (or lower) port number.

   Alternatively you can type the port number instead of pressing the up or down arrow key (such as *01* for port 1). For complete user instructions, see the KVM switch documentation.

2. If you cannot access the correct server, see Connecting the KVM cables on page 36 and verify that the cable connections are correct. To correct cable problems, power down the system and correct the cable connections. Then turn on the system again.

   For complete user and troubleshooting instructions, see the KVM switch documentation.

Completing pre-upgrade tasks

It is crucial that you record all critical system settings and back up all data in advance. All information is erased from the servers during the software upgrade.

Do the following tasks to prepare the Modular Messaging system for an upgrade:

- Verifying and saving data on page 155
- Creating a Data Collection Tool File on page 156
- Busying out ports on page 161
- Backing up the MAS on page 161

Verifying and saving data

Complete the following tasks before you start a Release 3 upgrade:

1. Using the latest copy of the planning forms, verify key settings on the MAS, including:
   - Switch integration settings
   - Port board settings and extensions
   - Domain information
   - Basic system setup
   - Modular Messaging service account and group
   - Exchange settings

   Ensure that you record the following items:

   - Under **Routing and Remote Access**, record the IP addresses for the MAS modems in the remote access service (RAS) group. See Table 22: RAS IP addresses for each MAS on page 227.
2. If you use this MAS to create, administer and deploy Caller Apps, backup all your working files to a location other than the MAS. Additionally, on the MAS you must have a current backup of the Caller Apps folder that contains the deployed caller applications that the MAS uses when it is running. For example, you might have a backup of C:\Program Files\Avaya

Modular Messaging\vserver\callerapps. Make a copy of the entire callerapps directory. The entire folder and it's structure must be restored.

If you do not have the original versions of the caller apps files that were used to administer caller apps, you can use a copy of the deployed **.uma* files found in the CallerApps folder. However, never administer caller applications files directly from the deployed location C:\ Program Files\Avaya Modular Messaging\vserver\callerapps.

3. Make a complete backup of all Caller Applications, customized tone files and customized prompt files. See Backing up the system on page 147 for information about where to locate these files on your system.
4. Review the configuration notes for any changes that might be needed regarding board configuration, switch programming, and application configuration. Make any necessary changes as part of the upgrade.

Creating a Data Collection Tool File

Note:

Always check the Avaya Support Web site at http://www.avaya.com/support for recent updates to the DCT program.

To create the DCT file:

1. Verify that the Modular Messaging system is working normally. All MASs and the Exchange message store must be running.
2. Switch the monitor to show MAS#1. For more information, see Switching the monitor to show the correct server on page 154.
3. Verify that the messaging services on the MAS are running:
   a. Double-click the **Monitor** icon on the desktop.
   b. Click **Services (Local)** in the left pane, if the item is not already selected.
   c. In the right pane, scroll down to the list of Modular Messaging services. All services start with the abbreviation **MM**.
   d. Verify that the **Status** column shows that service is **Started** for each messaging service that belongs on this MAS. For a list of required services, see Table 19: MAS services and features form on page 224.
   e. If service is not started for a required messaging service, right-click that **MM** service and select **Start**.

      The system starts the messaging service.
4. Insert the USB storage device with the DCT update file **MMDCTDistribute.exe** into a USB port on MAS#1. You can use any of the available USB ports.
5. Unzip the Data Collection Tool.

a. Navigate to the USB drive, **Removable Disk (E:)**

b. Double-click the executable file **MMDCTDistribute.exe** and then click **Unzip**.

c. If this is a multiple-MAS upgrade, be sure a copy of the updated MMDCT.exe file is on your USB storage device.

6. Navigate to the location where you stored the DCT executable file (**MMDCT.exe**). Double click the **MMDCT.exe** file.
7. On the first screen **Select the DCT Configuration to use**, select **Analyze existing system**. Click **OK**.
8. When asked if you want to use an existing DCT file, click **No**.
9. On the **MM System Analysis** screen, select the first MAS from the dropdown list at the bottom of the window. Click **Start**.

   The system displays the process of the data collection.
10. When analysis is complete, you see the message “information has been successfully collected,” The DCT displays the newly created file.
11. Save the DCT file to a location that is accessible to the MAS that you are upgrading and to additional MAS’s in the domain. Usually, save the file to a USB storage device. Do not save the file to the MAS.
12. In a multiple MAS system, update the Collection Tool (DCT) file with information from additional MAS’s.

    a. Insert a USB storage device with the DCT file you created for MAS 1and the updated DCT into the USB port on the next MAS you are going to analyze.

    b. Navigate to the updated **MMDCT.exe** file on the USB storage device.

    c. Launch the Data Collection Tool by double clicking the **MMDCT. exe** file.

    d. On the first screen **Select the DCT Configuration to use**, select **Analyze existing system**. Click **OK**.

    e. When asked if you want to use an existing DCT file, click **Yes**.

    f. Navigate to the location where you saved the DCT file you created for the first MAS.

    g. Double click this file to select it.

    h. On the MM System Analysis window, choose the number of the MAS you are analyzing from the dropdown list at the bottom of the window. Click **Start**.

Note:

Analyze the MASs in numeric order, first to last.

Analyze MASs you plan to replace with new S3500 servers.

When upgrading to an S3500 server, you can decrease the number of MASs in the voice mail domain (VMD). When decreasing the number of MASs, analyze only those MASs that you plan to upgrade. When the upgrade is complete, you must move the Modular Messaging services that are on MASs that were not upgraded to an MAS that was upgraded. For more information about moving MM services, see *Modular Messaging S3500-Family Hardware Maintenance and Additions.*

At the completion of the upgrade all MASs in the VMD must be running Modular Messaging Release 3. If you do not upgrade an MAS, do not include it in the VMD.

The system displays the process of the data collection.

i. When analysis is complete, you see the message that “information has been successfully collected.” The DCT displays the newly updated file.

j. Save the DCT file by overwriting the previous file.

CAUTION:

In multiple MAS systems, review and revise the DCT file after analyzing all MASs that will be upgraded. Information that is manually entered before the final analysis might be overwritten in the analysis of subsequent MASs.

Do not change any data that was populated by the DCT system analysis. There is only one exception to this rule. You can revise the default account names and passwords on the **MAS accounts and passwords** screen.

13. Review the completed file. Enter information in empty fields. To complete information, if necessary, use the planning forms from Appendix A: System planning forms on page 209.

Note:

Verify that there are no red x’s next to the DCT screen names in the left panel. The red x’s indicate data that is incomplete or not valid. Information must be complete and valid before you can proceed with the upgrade.

The following table maps the DCT fields to entries in the planning forms. Use it only if you need to enter data in empty fields.

DCT Field Name	Planning Form Location
Company name	Item 1, Table 14: Modular Messaging System Planning Form on page 213
Organization name	Item 2, Table 14: Modular Messaging System Planning Form on page 213
Time Zone	Not in planning form
Keyboard input language	Not in planning form
Message store	Item 3, Table 14: Modular Messaging System Planning Form on page 213
Contact Information for message store administrator	Item 5, Table 14: Modular Messaging System Planning Form on page 213
Name (Voice Mail Domain)	Item 6, Table 14: Modular Messaging System Planning Form on page 213
Number of MASs in the VMD	Item 7, Table 14: Modular Messaging System Planning Form on page 213
Connect to corporate network (DHCP or static)	Item 8, Table 14: Modular Messaging System Planning Form on page 213
Subnet mask	Item C3, Table 15: Corporate network planning form on page 216
Full computer name (for MAS)	Item C4, Table 15: Corporate network planning form on page 216
IP address (for MAS)	Item C5, Table 15: Corporate network planning form on page 216
Register DNS suffix in DNS	Item C15, Table 15: Corporate network planning form on page 216
Register IP address in DNS	Item C15, Table 15: Corporate network planning form on page 216
DNS Servers IP addresses, in order of use	Item C6, Table 15: Corporate network planning form on page 216
Search order of DNS domains	Item C7, Table 15: Corporate network planning form on page 216
Default gateway IP address	Item C8, Table 15: Corporate network planning form on page 216
WINS (if required) IP addresses	Item C9, Table 15: Corporate network planning form on page 216

DCT Field Name	Planning Form Location
Microsoft Windows domain	Item C10, Table 15: Corporate network planning form on page 216
Peer Exchange server	Item C11, Table 15: Corporate network planning form on page 216
Peer directory server	Item C12, Table 15: Corporate network planning form on page 216
Container if default not used	Item C13, Table 15: Corporate network planning form on page 216
Software installation path	Item C14, Table 15: Corporate network planning form on page 216
Local administrator accounts names and passwords	Table 18: Modular Messaging logon accounts form on page 221
Technical support name and password	Item A13, Table 18: Modular Messaging logon accounts form on page 221
Customer account name and password	Item A12, Table 18: Modular Messaging logon accounts form on page 221
Announcement languages	Table 19: MAS services and features form on page 224
TTS languages and sessions	Table 19: MAS services and features form on page 224
MM service selections	Table 19: MAS services and features form on page 224
Switch integration	Item 9, Table 14: Modular Messaging System Planning Form on page 213

14. When all fields in the DCT are complete, click **Complete** at the bottom of the DCT screen. Save the DCT file to a location that will be accessible to the MAS that you are upgrading. Usually, save the file to a USB storage device. Do not save the file to the MAS.

Busying out ports

Busyout the ports on the MAS you are upgrading and on the switch before you start the upgrade. Otherwise, messages will spool on the MAS, and add to the upgrade time.

To busyout the ports:

1. The PBX administrator must use the procedures appropriate for this PBX to busyout the ports. Depending on the switch integration, the administrator might be able to temporarily reroute calls to other MASs. If an MAS is unavailable, callers into the system might hear ring-no answer or a busy signal.
2. Switch the monitor to show the MAS. For more information, see Switching the monitor to show the correct server on page 154.
3. Use the Port Monitor to disable the MAS ports:
   a. Click **Start** > **Programs** > **Avaya Modular Messaging** > **Port Monitor**.
   b. In the Port Monitor window, hold down the **Shift** key or Control (**Ctrl**) key and click to select all the ports.
   c. Right-click the port list and select **Disable**.
   d. Verify that the status of all ports is **Disabled**.
   e. Close the Port Monitor window.

Backing up the MAS

Before beginning the software upgrade, make a current backup of the important system files, including any customized tone files and the DCT file you just created. For this procedure, see Backing up the system on page 147.

Preparing the MAS for the upgrade

The Modular Messaging Release 3 software requires a new operating system and application software on each MAS. You must preform one of the following procedures to prepare the MAS for the Modular Messaging software upgrade.

- If you have a new hard disk drive with the Modular Messaging boot image already installed, you must replace the existing hard drive with the new one. For more information, see Replacing an MAS drive in an S3400-family server on page 162.
- If you do not have a replacement hard disk drive, you must install the new Avaya boot image on the existing hard drive. For more information, see Install new Avaya boot image on page 171.

  Note:

  If you are replacing an S3400 server with an S3500 server, see Upgrading to an S3500 server on page 182.

After completing either the installation of the new drive, or the reload of the boot image, continue with Continuing the upgrade on page 172.

Replacing an MAS drive in an S3400-family server

Follow the procedures in this section only if you received a replacement hard disk drive for the upgrade. If you did not receive a replacement drive, see Install new Avaya boot image on page 171. Complete the following procedures to replace the IDE hard disk drive in an MAS that uses Avaya S3400-family server hardware. For more information about S3400-family server hardware, see:

- *Avaya Modular Messaging S3400-Family Hardware Maintenance and Additions* (PDF)
- the **Maintenance** section on the *Avaya Modular Messaging Documentation* media

  Note:

  If you experience problems and must back out of the upgrade, you can recover temporarily by reinstalling the old drive back into the MAS. Contact your Avaya or business partner support organization for assistance with completing the upgrade.

Gathering the required tools

You must have the following tools on site to work on a Avaya S3500-family message server:

- A medium-width flatblade screwdriver
- A No. 2 Phillips screwdriver

- A small pair of needlenose pliers
- A small pair of wire cutters
- A sharp, pointed instrument, such as a ballpoint pen

CAUTION:

Do *not* use the point of a lead pencil to operate the system reset switch. The graphite can damage a circuit board and cause problems, such as electrical shorts.

Removing AC power

Do the following for every hard disk drive that is being replaced:

1. Verify that the replacement equipment is on site.
2. Verify that the green power lamp on the front of the server is off. If the lamp is lit, press and hold the power button to turn off the server.

   Note:

   In the United Kingdom, if a modem is attached to the server, disconnect the telephone line before you unplug the power cord.
3. Unplug the power cord from the AC connector on the back of the server.

Removing the front bezel and top cover

Remove the front bezel and top cover to access the internal components:

1. *For a stackable desktop setup,* remove any units stacked on top of the server that you must access.
2. Remove the bezel, the plastic cover, on the front of the chassis.
   a. Press down on the two tabs on the top of the bezel.
   b. Tilt the bezel forward, and then lift it out.
3. Loosen the screw latch for the top cover, located on the back of the chassis.
4. *For a rack-mount setup,* slide the server forward.

   Note:

   To get sufficient cable slack, you might need to unplug the cables on the back of the MAS. You can then slide the server all the way forward.
5. Slide the top cover towards the front of the server, and then lift the cover off the chassis.

Removing the drive cage

CAUTION:

Observe proper electrostatic discharge (ESD) precautions when you handle computer components. Wear an antistatic wrist strap that touches your bare skin and connect the strap cable to an earth ground. For more information, see "Protecting against ESD damage" on the documentation media.

To remove the drive cage:

1. Disconnect the signal and power cables to all drives in the cage assembly. The connections vary per model of MAS. See the appropriate figure:
   - *Integrated video and LAN model:* See Figure 21: S3400-family MAS drive cage cables—integrated video and LAN on page 165.
   - *Nonintegrated video and LAN model:* See Figure 22: S3400-family MAS drive cage cables—nonintegrated video and LAN on page 166.

   To disconnect the drive cables:

   a. Unplug the power connectors from the DVD player and lower drive (hda).

   b. Unplug the 80-pin IDE ribbon cable from the DVD and the lower drive.
2. Remove the drive cage retaining screws. See Figure 23: Removing or replacing the S3400-family drive cage on page 167.

   a. Remove the 4 screws from the front of the drive cage.

   b. Remove the 2 flathead screws from the side of the chassis, located about 6 inches from the front of the cage.

   Note:

   For rack-mount setups, you might need to loosen or remove some of the screws that attach the rail handle to the server. Then you can slide out the drive cage.
3. Gently slide the drive cage assembly forward and out of the server.
4. Place the drive cage assembly on a clean, static-free surface.

Figure 21: S3400-family MAS drive cage cables—integrated video and LAN

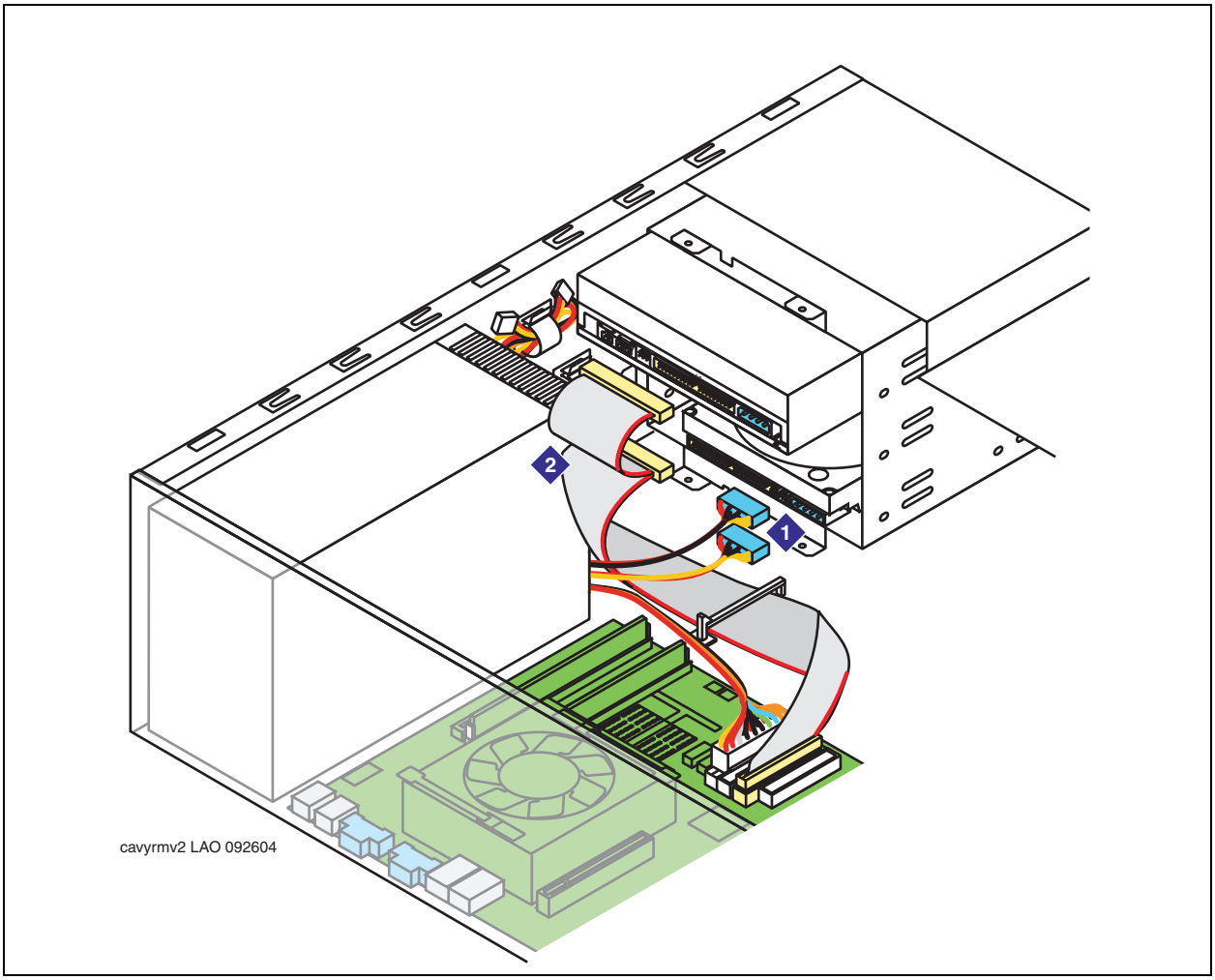

Figure notes:

1. **Disk drive and DVD player power connectors**
2. **80-pin IDE ribbon cable to the DVD and hard disk drive (hda), and the primary IDE connector PRI IDE on the motherboard**

Figure 22: S3400-family MAS drive cage cables—nonintegrated video and LAN

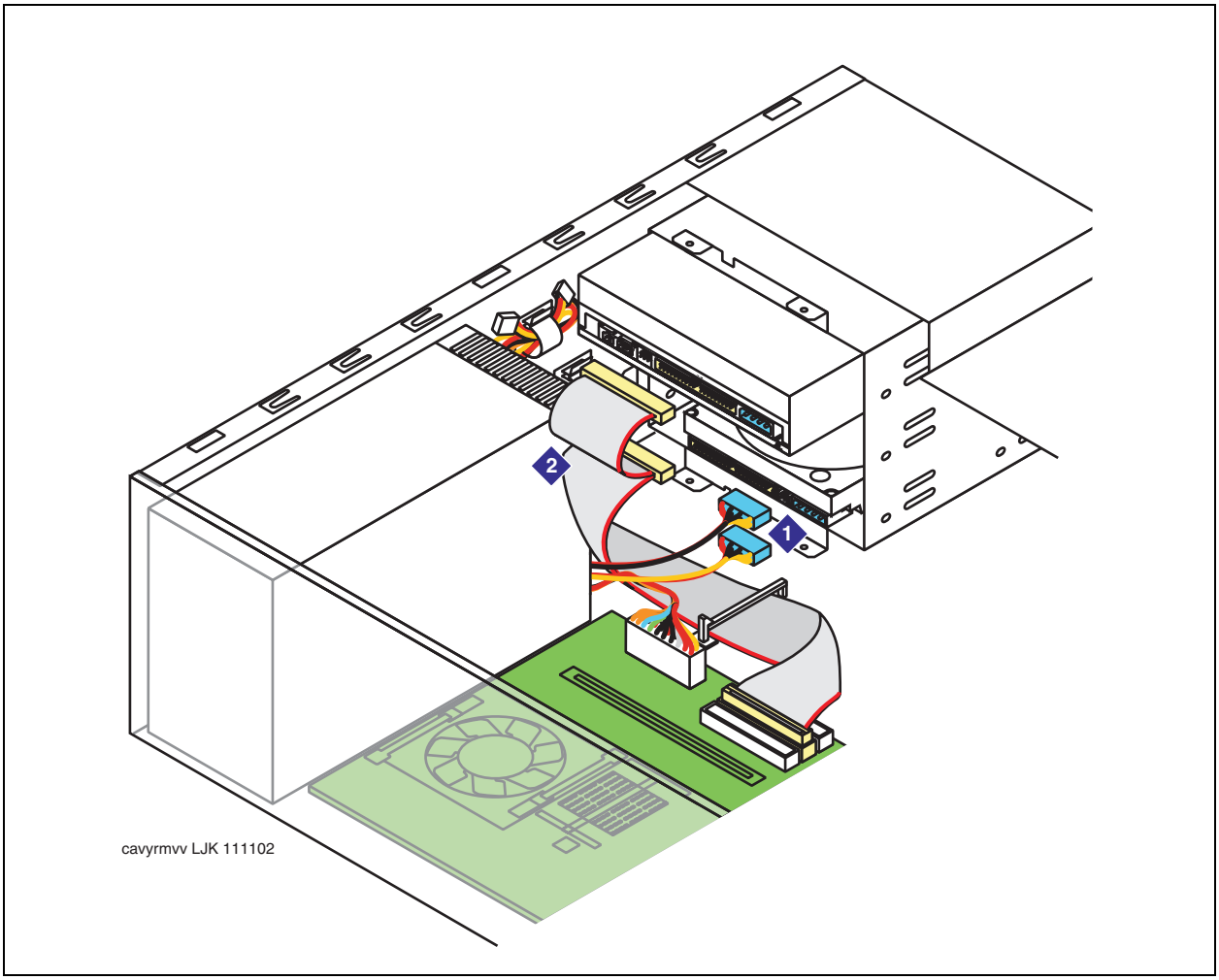

Figure notes:

1. **Disk drive and DVD player power connectors**
2. **80-pin IDE ribbon cable to the DVD and hard disk drive (hda), and the primary IDE connector PRI IDE on the motherboard**

Figure 23: Removing or replacing the S3400-family drive cage

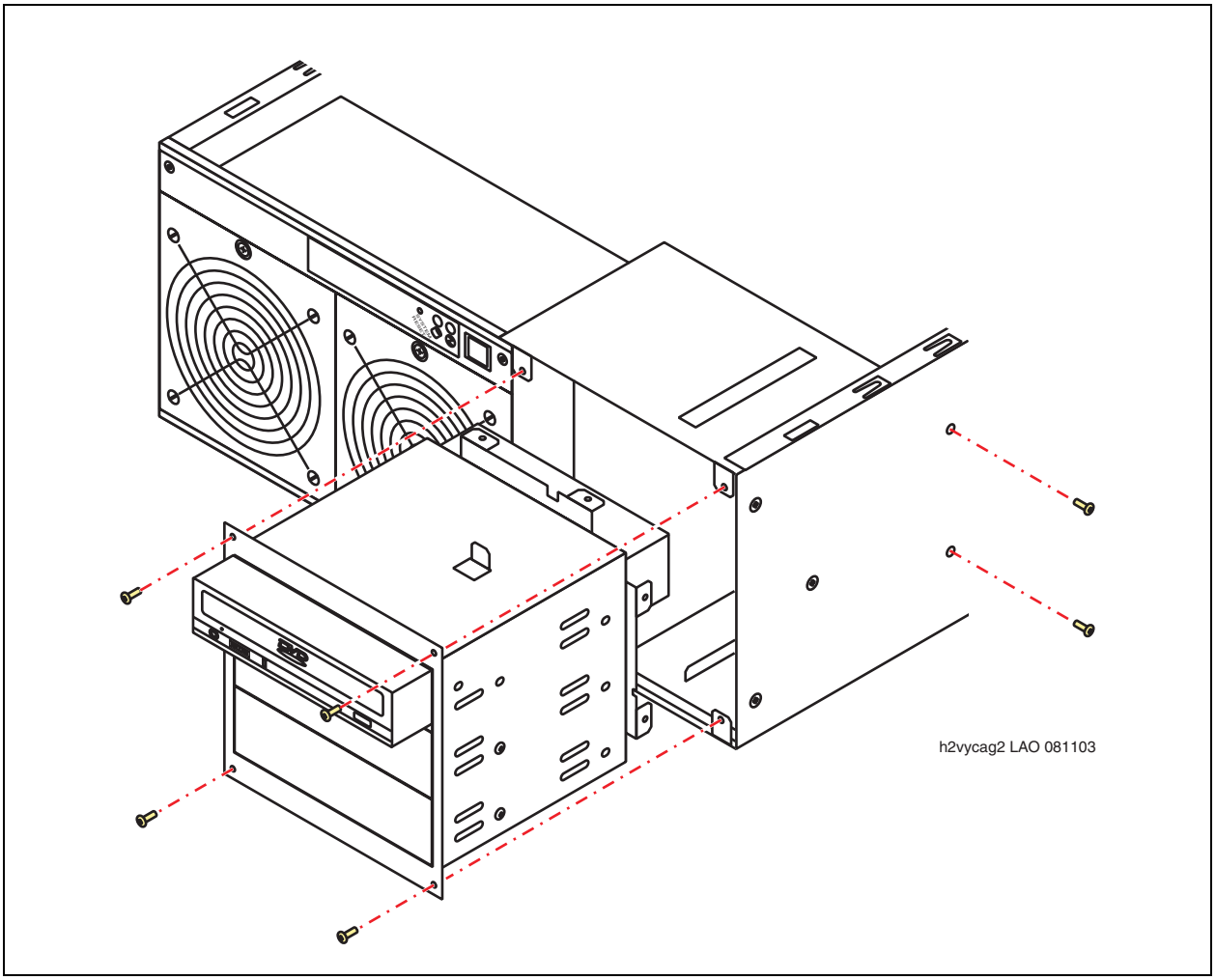

Replacing the hard disk drive

To replace the IDE drive:

1. Place the drive cage assembly on a clean, static-free surface.

   CAUTION:
   Support the drive when you remove the screws. Otherwise, the drive might drop when it comes loose.

2. Remove the 4 mounting screws that secure the disk drive to the bottom of the drive cage. See Figure 24: Removing or replacing an S3400-family IDE drive on page 168.

3. Configure the replacement drive as the IDE bus master.

a. Locate the 9-pin master/slave connector on the back of the drive. See Figure 25: IDE drive jumper settings on page 169.

b. Place a jumper over the set of pins at either end of this connector to set up this drive as a master. Figures on the drive identify the different jumper settings.

4. Insert the new IDE drive in the drive cage. The connector on the disk drive must face the back of the cage.

5. Reattach the 4 mounting screws to secure the drive to the bottom of the cage.

Figure 24: Removing or replacing an S3400-family IDE drive

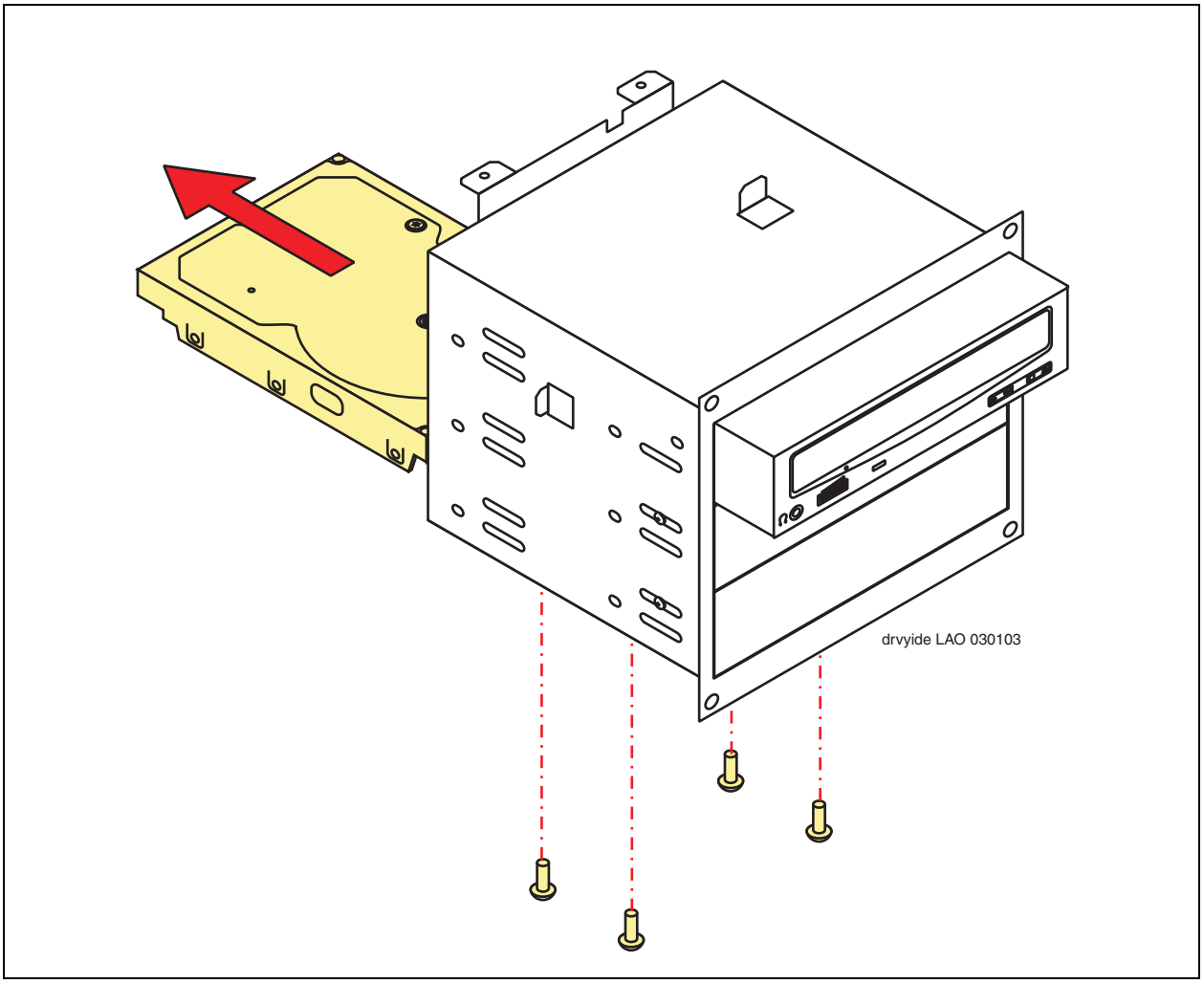

Figure 25: IDE drive jumper settings

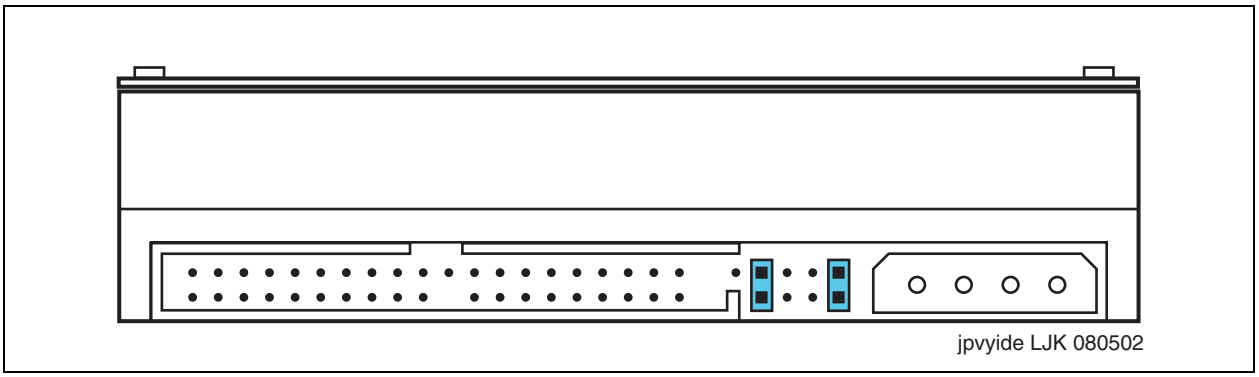

Note:

Always set the IDE drive to be the bus master as shown by the shaded jumpers.

Reinstalling the drive cage

To reinstall the drive cage:

1. Position the drive cage assembly in front of the chassis. The slot on the bottom of the cage must align with the guide rail inside the chassis.
2. Gently slide the drive cage assembly into the server.
   a. Lift up the assembly to slide the angled foot on the left side of the drive cage into the slotted tab on the chassis.
   b. The drive cage is properly seated when it is flush with the front of the chassis.
3. Reconnect the signal and power cables to all drives in the cage. See the appropriate figure for your model of MAS:
   - *Integrated video and LAN model:* See Figure 21: S3400-family MAS drive cage cables—integrated video and LAN on page 165.
   - *Nonintegrated video and LAN model:* See Figure 22: S3400-family MAS drive cage cables—nonintegrated video and LAN on page 166.

   To reconnect the drive cables:

   a. Plug the 80-pin IDE ribbon cable to the DVD player and the lower drive (hda) into the primary connector **PRI IDE** on the motherboard.
   b. Plug in the power connectors to the DVD and lower drive.

   Note:

   The harness has an extra 4-pin power connector for an optional hard disk. You can plug either connector into the IDE drive. The DVD drive always uses the terminating connector.

4. Verify that all cables are neatly dressed, either in the power harness or under the tie-down strap for the IDE ribbon cables as appropriate.
5. Reattach the drive cage retaining screws. See Figure 23: Removing or replacing the S3400-family drive cage on page 167.
   a. Reattach the 4 screws to the front of the drive cage.
   b. Reattach the 2 flathead screws to the holes in the side of the chassis, about 6 inches from the front of the cage.
   c. *For rack-mount setups,* if you loosened or removed some of the screws that attach the rail handle to the MAS, replace or tighten the screws.

Replacing the top cover and front bezel

To replace the chassis cover and bezel:

1. Position the top cover so that the latch hook is in back, and the rail hooks face toward the back of the server.
2. Set the cover on the chassis so the cover is aligned with the sides and slightly overhangs the front of the server.
3. Slide the cover towards the back of the server until the cover is flush with the chassis.
4. *For a rack-mount setup,* slide the server back into the cabinet.
5. Tighten the screw latch on the back of the chassis to secure the top cover.
6. Replace the bezel on the front of the chassis.
   a. Insert the tabs on the bottom of the bezel into the chassis.
   b. Push the bezel upright until the two upper tabs snap into place under the top cover.
7. *For a stackable desktop setup,* replace any units that were stacked on top of this server.

Restoring power to the system

To restore power to the system:

1. *For a rack-mount setup,* reattach any cables you unplugged from the back of the server.
2. Plug the AC power cord back into the power outlet on the server.
3. Press the power button on the front of the server.

   The green power lamp on the front of the server should light.
4. When the server boots, continue with Continuing the upgrade on page 172.

   Note:

   Leave the old hard disk drive with the customer.

Install new Avaya boot image

Follow the procedures in this section only if you did not receive a replacement hard disk drive for the upgrade. If you did receive a replacement drive, see Replacing an MAS drive in an S3400-family server on page 162.

You must reload the boot image on each S3400-family server MAS and Avaya-provided supplementary server to upgrade the server to the Microsoft Windows operating system. New application software is installed as part of the software reload.

CAUTION:
You must have a current and complete DCT file before you reload the boot image.

To copy new software to the Avaya Messaging Application Server (Avaya MAS) or Avaya-provided supplementary server:

1. If the server is not on, turn on the server by pressing the power button on the front of the server.
2. Verify that the monitor is showing the correct server.
3. Insert Disk 1 of the *Avaya Modular Messaging Avaya Messaging Application Server and Boot Software for Microsoft Exchange* media into the DVD drive.

   Wait for green LED on the drive to go out.
4. Press **Ctrl** + **Alt** + **Del** to reboot the system.
   a. In the Windows Security window, click **Shut Down...**
   b. In the Shut Down Windows window, select **Restart** and click **OK**.
5. When the computer starts to boot, the system displays a warning that the hard drive contents will be overwritten.
   a. Press any key to continue.

      A message confirms that the hard drive will be overwritten.
   b. Press any key to continue.

   The MAS starts to copy the disk image to the hard disk. The entire copy procedure takes up to 30 minutes per DVD.
6. When the system prompts you, insert the next disk. When the DVD drive light turns dark, click **OK**.
7. Repeat step 6 for disk 3.
8. When prompted, remove the media before the system reboots.

Continuing the upgrade

Continue the upgrade by completing the following procedures:

Running the Windows Setup Wizard on page 172

Copying the DCT data file and updating the DCT on page 173

Running the setup program on page 173

Running the Windows Setup Wizard

Continue with the following steps to complete the Windows setup wizard and activate Windows:

1. After the system reboots, press any key to continue.

   The system reboots and runs the Windows Setup program.

2. If a modem is connected, a Hardware Installation window opens. Click **Yes** to continue the installation.

3. The Windows Setup wizard runs. To complete the wizard:

   a. On the Welcome screen, click **Next**.

   b. On the License Agreement screen, choose **I accept this agreement**. Click **Next**.

   c. On the Your Product Key screen, type the Windows product key for this server.

   Note:

   Each Windows computer has a unique product key for the Windows 2003 operating system. Enter the number exactly as shown.

   Record the Windows product key in Table 23: Windows product keys for MASs on page 228.

   For a Release 3 upgrade, the Windows 2003 sticker ships with the software. Paste this sticker onto the server. Do not enter the old Windows 2000 product key.

   d. Click **Next**.

   The server automatically reboots.

   Note:

   You might see the error message **System Event Log Full** when the system boots. You can ignore this message. Modular Messaging does not use this log.

4. When the system prompts you to log on:

   a. Press **Ctrl**+**Alt**+**Del**.

   b. In the Log On to Windows window, leave the user name as **Administrator**.

c. Leave the password field blank.

d. Press **Enter** or click **OK**.

5. You must activate the Microsoft Windows operating system before you restart the server. Use the site-specific procedures to activate Windows. For more information, see Activating Microsoft Windows on page 286.

Copying the DCT data file and updating the DCT

You must copy the Data Collection Tool (DCT) data file to the hard disk on the server before you continue the upgrade.

CAUTION:
Copy the DCT data file to the hard disk on the server before the next reboot. Some S3400-family servers fail to recognize a USB storage device after the server reboots.

1. Insert the USB storage device that contains the final DCT file for this system. You can use any of the available USB ports on the server.
2. To copy the DCT data file to the server:

   a. Navigate to the USB drive, **Removable Disk (E:)**.

   b. Right-click the most current DCT file for this site, such as *sitefile.mmdct*.

   c. Copy the .mmdct file to the C:\Avaya_Support folder.

   d. Verify that the correct DCT file is listed in the C:\Avaya_Support directory.
3. Update the DCT file on the MAS.

   a. Copy the **MMDCTDistribute.exe** file from the USB storage device to a folder on the server, such as C:\Avaya_Support.

   b. Double-click the executable file **MMDCTDistribute.exe** and then click **Unzip**.

   The new DCT program replaces the MMDCT.exe file in C:\Program Files\Avaya Modular Messaging\Install\MISCM.

Running the setup program

Complete the following steps to run MM_Setup.exe.

1. To complete the software reload, double-click the **MM_Setup** icon on the desktop.

   An MM_Setup window opens.

   a. When the system prompts you, press any key to continue.

   The program reports that Modular Messaging configuration will start after the server reboots.

b. Press any key to continue.

After the MM_Setup utility runs, the server shuts down.

2. Continue with Upgrading Modular Messaging Software on page 174.

Upgrading Modular Messaging Software

To upgrade the Modular Messaging software, you must complete the following procedures described in this section:

Running the Modular Messaging Configuration Wizard

Physically power up the MAS. The Modular Messaging Configuration Wizard (MMCW) launches automatically when the system starts. The MMCW controls the next steps in the installation process.

Complete the following steps to configure the MAS from the DCT file:

1. When the Modular Messaging Configuration Wizard (MMCW) launches, the Modular Messaging Welcome screen is displayed. Click **Next**.
2. On the **Locate Configuration Data** screen, highlight the DCT file you created for this upgrade by analyzing the MAS, or click Browse and browse to the directory where the DCT file is stored. By default, the MMCW searches the directory for all files with the file type **.mmdct*.
3. After selecting the DCT file that was created for this upgrade, click **Next**. You will be prompted to verify the file selection. Click **Yes**, to select the file.
4. The Data Collection Tool launches with the file you selected. Review the file and enter data in empty fields.

   Note:

   Verify that there are no red x's next to the DCT screen names in the left panel. The red x's indicate data that is incomplete or not valid. Information must be complete and valid before you can proceed with the installation.

5. On the last screen, click **complete** and then save the file again if you have made any additions.

6. After saving the DCT file, click **complete**.
7. On the **Messaging Application Server Number** screen, in the **MAS Number** field, select the number of the MAS that you are installing and click **Next**.

   The MAS configuration starts, the Sysprep window opens, then the server reboots.
8. After the reboot starts, a Windows Setup wizard runs. To complete the wizard:

   a. On the License Agreement screen, select **I accept this agreement**. Click **Next**.

   b. On the Your Product Key screen, type the Windows product key for this server.

   Note:

   Each Windows computer has a unique product key for the Windows 2003 operating system. Enter the number exactly as shown.

   On a new S3500-family server, the product key sticker is located inside the empty drive tray on the lower-left of the server chassis. You can remove the drive tray to easily read the sticker. Record the Windows product key in Table 23: Windows product keys for MASs on page 228.

   c. Click **Next**.

   The MMCW proceeds with the installation of the specified MAS unit based on information contained in the DCT file.

   Information contained in the DCT file is validated against the system at this time. This may result in errors that will require you to correct the data in the file or make system corrections and begin the configuration again. If you receive an error, see the Data Collection Tool screen-specific help for information about field parameters and conditions that may result in errors or warnings.

   The progress of the installation is displayed by informational messages on the MMCW screen.

Installing third party software

After the reboot, the MMCW will prompt you to install third party software.

When installing third party software, install the following components:

- Exchange 2003 System Management Tools
- Exchange Server 2003 Service Pack 2
- MSDE install
- Anti-virus software

1. When prompted to install third party software, install the Exchange 2003 System Management Tools.

Note:

The Microsoft Exchange 2003 System Management Tools must be installed on any MAS that will have any of the following services installed on it:

- Messaging Application Server
- Call Me Server
- Message Waiting Indicator (MWI) Server.

Exchange 2003 System Management Tools are required, Exchange 2000 System Management Tools are not supported.

a. Insert the customer-provided Microsoft Exchange 2003 Server media in the MAS drive.

b. Install the Management tools by completing the Microsoft Exchange Installation Wizard.

c. If you receive a compatibility warning, click **Continue**.

d. For details about this procedure, see the Microsoft Exchange documentation.

2. Follow site-specific procedures to install Exchange Server 2003 Service Pack 2.

3. To install MSDE, complete the following steps:

   a. Insert the Modular Messaging Application media (disk 1) in the MAS DVD drive.

   b. In Explorer navigate to the Install\System Upgrade\MSDE directory.

   c. Double click on the MSDE.bat file.

   d. After the utility runs, close the explorer window.

4. Install anti-virus software that is specified by your local site requirements and implementation. Avaya strongly recommends that you install anti-virus software on any Microsoft Windows computer that runs Avaya Modular Messaging software. For more information about anti-virus software on an Avaya MAS, see Administering anti-virus software on page 87.

Completing the MMCW Configuration

After third party software is installed continue with the following steps to complete the configuration.

1. Verify that the *Avaya Modular Messaging Messaging Application Server Software* media (disk 1) is in the MAS DVD drive. Then, click OK on the third party dialog box. The MMCW resumes with the following sequence of events:

   - The Setup screen displays and proceeds directly to the System Upgrade screen.
   - The system reboots without user intervention
   - MMCW restarts automatically and runs the MM Application Setup, installing all MM services

- After another reboot and auto log on, the MMCW continues the system configuration, displaying informational messages as each component, such as dialogic drivers or remote access is configured.

2. When MAS configuration is complete, the progress bar stretches across the window and the **Next** button becomes active. Click **Next**.
3. On the Modular Messaging Wizard Completed screen, click **Finish**.

Completing the upgrade

To complete the upgrade you will need to complete the server setup, resynchronize the FEDB, restore customer data and configure the voice mail system. See:

1. Completing server setup on page 178
2. Restoring customer data on page 181

After you have completed these procedures, continue the Modular Messaging software upgrade as appropriate:

1. If you have more than one MAS:
   a. ***For the first MAS upgraded only,*** let the Modular Messaging software run for 15 minutes so that it can update shared data across the voice mail domain. Return to Verifying and saving data on page 155 to begin upgrading the next MAS.
   b. Repeat the Modular Messaging software upgrade procedure until all MASs are upgraded.
2. Configure the voice mail system. For more information, see Configuring the voice mail system on page 113.
3. You must update the Modular Messaging Active Directory Exchange extensions software on any machines where it is installed. This might include Exchange servers and client machines used for subscriber administration (any Exchange extensions on an MAS were updated with the rest of the Modular Messaging software). See Adding the Exchange extensions on page 74.
4. Implement additional TUI's if necessary. See Implementing additional TUIs on page 184.
5. Update the client software on any non-MAS machines where it is installed. See Updating client software on page 185.
6. Set up test subscribers and perform all acceptance tests that are relevant to the system. See Testing and backing up the system on page 135.
7. When acceptance tests are complete, back up each MAS using the regular backup procedures for this site. For guidelines, see Backing up the system on page 147.

8. When finished with each MAS, verify that the MAS disk is in good condition by running the following:
   - Disk Defragmenter system tool
   - **chkdsk** command
9. If you are upgrading an S3400 MAS to an S3500 server, see Upgrading to an S3500 server on page 182.
10. If you are adding a new MAS to this system, begin the installation now.
    - To install a new Avaya Messaging Application Server (Avaya MAS), begin with Chapter 2: Installing Avaya-provided hardware on page 9.
    - To install a new customer-provided MAS, begin with Chapter 3: Installing Dialogic port boards in a customer-provided MAS on page 43.

    Print the appropriate checklist from Appendix B: Installation and upgrade checklists on page 231 and use it as a guide.
11. When finished, save all planning forms in a safe place.

Completing server setup

To complete setup of the server complete the following tasks as necessary:

- Administering anti-virus software on page 178
- Installing software updates on page 179
- Updating Microsoft Windows on page 180
- Disable private LAN on page 180
- Configuring port boards on page 180
- Resynchronizing the FEDB on page 181

When you have completed the procedures required for your system, proceed to Chapter 8: Configuring the voice mail system on page 113

Administering anti-virus software

Avaya strongly recommends that anti-virus software be installed on any Microsoft Windows computer that runs Avaya Modular Messaging software. The type of virus-checking software used and the method of installation depends on customer requirements and the local implementation.

Guidelines for using anti-virus software on a computer that is running Avaya Modular Messaging software include:

- Consider the impact that anti-virus scanning has on the performance of the Avaya messaging servers. Avaya recommends the use of “on-demand” scanning, where scans are run at scheduled intervals. Avoid using a message-scanning method that could drastically impact the performance of the Avaya servers. For example, do *not* use “on access” scanning. This type of scan runs whenever a file changes, and can have a negative impact on server performance.

  Note:

  Some anti-virus software applications default to scan on startup. Disable this feature, or it increases the time that it takes a system to come back online after a reboot.

- Avaya recommends administering the anti-virus software as follows:
  - Scan the hard disk at least once per week during off peak hours. Avaya recommends a daily scan. You can run scans on multiple Modular Messaging servers at the same time. However, avoid scheduling the anti-virus scan at the same time as when a scheduled backup occurs on the MAS.
  - Schedule virus definition updates to occur automatically at least once per week. The updates must occur before the next scheduled scan time to ensure that the latest data (DAT) files are used during the scan. However, do not schedule updates to occur during a virus scan.
  - If the anti-virus software locates a virus, it should first attempt to clean the file. If that fails, the software should move the file to a different directory.

Information about anti-virus interoperability of Avaya Modular Messaging software with various anti-virus products and performance testing is available. The information addresses security issues such as reporting concerns and receiving notifications. For more information, see *Anti-Virus Software on Microsoft Windows-based Avaya Messaging Products.*

Installing software updates

A new Modular Messaging system ships with the most current software that is available at the time. However, the software must be updated after an installation or upgrade to include the latest changes. The updates might be in the form of an Avaya Service Pack (SP) or a software patch (hot fix).

To determine if a Modular Messaging software update is needed:

1. Locate any relevant Avaya software updates on the Avaya Support Web site at http://www.avaya.com/support. For complete steps, see Obtaining software updates from the Web on page 279.

   Note:

   If you followed the procedure for Obtaining software updates on the Web on page 3, you already downloaded any required software updates.

2. If the Modular Messaging system requires a software update, complete the update procedure now before you do acceptance testing. Follow the instructions in Appendix E: Updating Modular Messaging software on page 279 to update the system with the latest changes.

Updating Microsoft Windows

A new Avaya MAS contains the most current Microsoft Windows software at the time it is shipped. After installation, you must install the latest Microsoft Windows system updates, security patches, and hot fixes to protect the operating system from known security weaknesses. Check with the appropriate Windows administrator for the software update procedures to use at this site.

Note:

Avaya technical support representatives must follow their specified internal procedures for verifying the software that is installed. If required, they must update the software with the latest patches as instructed.

Disable private LAN

The Modular Messaging private LAN is not used with the Microsoft Exchange configurations. Disable the LAN by completing the following steps:

1. On the desktop, right click on the **Network Places** icon. Select **Properties**.
2. In the Network Connections window, highlight either **Intel(R) PRO100M Network Connection**, or **Intel(R) 100+ PCI Adapter,** whichever appears in the window. Right click on your selection. From the drop-down list, select **disable**.
3. In the Network Connections window, from the toolbar menu, select **Advanced** > **Advanced Settings**. Verify that the corporate LAN is listed at the top of the list of connections. If not, highlight the name of the corporate LAN and use the arrows to move it up in the list. When finished, click **OK** to close the Advanced Settings window. Close the Network Connections window.

Configuring port boards

The Avaya Modular Messaging Configuration Wizard automatically configures any installed Dialogic port boards for several switch integrations, including:

- Avaya CM (IP SIP)
- Avaya (IP H323)
- Avaya (QSIG)
- Cisco (QSIG)
- Nortel NT M-1 (QSIG)

- Siemens Hipath (QSIG)

If this MAS contains Dialogic port boards that do not use one of the automatic-configuration switch integrations, you must configure the port boards manually. Continue with Appendix D: Configuring and testing port boards on page 263.

Resynchronizing the FEDB

After you configure each MAS, the system automatically starts to synchronize the front end database (FEDB). The system might take 1 hour to several hours to synchronize the data, depending on the number of subscribers that are administered. The VMSC on all MASs is unavailable during the time of the FEDB resynchronization.

To monitor the progress of the FEDB resynchronization:

1. In the Computer Management window, in the left pane, expand **System Tools**, and then **Event Viewer**.
2. In the left (Tree) pane, click **Application**.
3. The **gv_server** event 1030 indicates that a full FEDB resynchronization started.

   Note:

   If the FEDB resynchronization does not start automatically, restart the **MM Messaging Application Server**.

4. Refresh the window display periodically until you see **gv_server** event 1027, **The FEDB resynchronization completed**.

Restoring customer data

After the new operating system is installed, you must restore the customer data to the system. From your backup location, restore the customized tone files, customized prompt files, and caller applications to the following locations on the Modular Messaging system.

- restore tone files to: **\Avaya_Support\Tone_Files**
- restore the **CustomPrompts.ovf** and **CustomPrompts_G711.ovf** prompt files to: **\Program Files\Avaya Modular Messaging\Vserver**
- restore caller applications to: **\Program Files\Avaya Modular Messaging\VServer\CallerApps**. Refer to *Avaya Modular Messaging Software Messaging Application Server Administration Guide* for instructions for restoring caller applications.

Upgrading to an S3500 server

Use these procedures to replace an existing S3400 server with an S3500 server. Do not install any additional new servers now. You can replace the existing hardware, but you must install additional servers only after the upgrade is complete.

Removing Hardware

Complete the following steps to remove the server:

1. Shut down the server software. Click **Start** > **Shut Down**, and then click **OK**.
2. Turn off the S3400-family server.
3. Label and unplug all cables to the server.
4. Remove the S3400-family MAS from the stacked configuration or customer cabinet.

   Note:

   For complete instructions about replacing an S3400-family MAS, see *Avaya Modular Messaging S3400-Family Hardware Maintenance and Additions* on the documentation media.

Transferring port boards

If the MAS contains Dialogic port boards, you must transfer the port boards from the S3400-family server to the S3500-family server:

CAUTION:

If the MAS contains Dialogic port boards, you must transfer the port boards from the S3400-family server to the S3500-family server. Observe proper electrostatic discharge (ESD) precautions when you handle computer components. Wear an antistatic wrist strap that touches your bare skin and connect the strap cable to an earth ground.

Complete the following steps to transfer port boards to the new server:

1. Open the S3400-family MAS and remove the port boards.
2. If multiple boards are present, identify which board is first. You might need to adjust the option settings if you have more than two boards and must install them in a new server.
3. Remove the handle from the port board, or the board cannot fit into the PCI card cage in the S3500-family server.

4. Remove the top cover of the S3500-family server. Push on the blue release buttons and slide the cover towards the back.
5. Remove the PCI card cage by pulling straight up on the lifting straps.
6. Remove the retaining bracket on the card cage by loosening the thumb screw.
7. Install a maximum of two port boards into the PCI card cage. Use the two upper slots, **PCI2** and **PCI3**. To install only one port board in the server, use the middle slot, **PCI2**.
8. If two boards are present, connect the boards using the CT bus cable from the old server.

Continuing the S3500 Upgrade

See Installing S3500-family servers on page 21 for instructions for installing the S3500 server into the messaging system.

After installing the hardware, you must configure the MAS using the DCT analyze file created during the upgrade. For instructions for creating this file, see Creating a Data Collection Tool File on page 156.

If you are using Dialogic port boards, you must first complete the following steps to prepare the DCT file for use in configuring the S3500 server.

1. Download the following tool from the support site, **MMS3500DialogicUpgrade.exe**.
2. Copy the file to the same directory as your DCT file.
3. Access a command line prompt:
   a. Click start-Run
   b. In the Open window, type cmd
   c. Click OK
4. Navigate to the directory where you saved the **MMS3500DialogicUpgrade.exe** file.
5. Type **MMS3500DialogicUpgrade.exe <dctfilename.mmdct>**, where **<dctfilename.mmdct>** is the name of the file created when you analyzed the MAS.
6. Press **Enter**.

The tool creates a new DCT file adding **S3500** to the file name. Use this file to configure the S3500. Go to Continuing the upgrade on page 172 to continue the configuration.

Implementing additional TUIs

This task applies to systems that are running only the Aria TUI on S3400-family servers.

A Release 1.1 Modular Messaging system always uses S3400-family hardware. If the current system runs only the MM Aria TUI, the customer might want to implement additional Telephone User Interfaces (TUIs) after the upgrade. Before you can add new TUIs, you must verify that the MAS port maximums are within prescribed limits. If any MAS does not have the capacity to support the additional TUIs, you must take the steps described in this section.

To verify that the system can support additional TUIs:

1. Verify that MAS port maximums are within prescribed limits. For more information, see Table 24: Supported MAS port boards—S3400-family and CPE server upgrades on page 264. If any MAS that has more than 30 ports:

   a. Remove any extra port boards from the over-capacity MAS. Install the boards in another MAS if possible. You can use either an under-capacity MAS that is already on-site, or a new MAS if one was purchased for this purpose.

      - For more information about hardware procedures, see *Avaya Modular Messaging S3400-Family Hardware Maintenance and Additions* on the documentation media.
      - For procedures to bring the moved port boards into service, see Appendix D: Configuring and testing port boards on page 263.

   b. If no additional MASs are available to accommodate the extra ports, the customer must either:

      - Refrain from deploying the additional TUIs until additional MASs are installed.
      - Remove the extra port boards and operate at reduced capacity until additional MASs are installed.

2. The PBX administrator must reallocate the port administration on the switch to reflect the changes made to the Modular Messaging system.

Updating client software

Note:

If you are not updating to the new release of Subscriber Options, see Changing security setting on page 185.

Do this task on each subscriber machine where client software is installed.

The Modular Messaging client software packages (such as Subscriber Options) must be updated on each subscriber machine where they are already installed.

To update the client software to the latest release:

1. Log in to each subscriber machine where a Modular Messaging client software package from the previous release is installed. You must use an account with administrator rights to install software (such as the local administrator account for the client machine).
2. Install a new version of the client software using the normal software installation procedures for this site. For example, to reinstall the client software from the Modular Messaging software media:
   a. Insert the *Avaya Modular Messaging Messaging Application Server Software* media (disk 1) in the machine's drive, or into the shared DVD drive of another machine that is mapped as a network drive on this machine.
   b. Navigate to the **Install\Client Distrib** directory on the appropriate drive (such as D:).
   c. Double-click the **setup.exe** file.
   d. The Avaya Modular Messaging Client Installation Wizard runs. Follow the prompts.

   The reinstallation process removes the old software and installs the newest version.
3. Repeat this procedure until all existing versions of client software have been replaced with the version for the newest release.

For details on installing or using a client software package, see the appropriate user guide, listed in the reference section on the documentation media.

Changing security setting

If you are not updating Subscriber Options to the new release, you must edit the security setting to enable Subscriber Options to work with Modular Messaging Release 3. Complete the following steps to edit the setting.

1. Click **Start** > **Run**.
2. In the Run window **Open** field, type **regedit** and press **Enter**.

3. In the Registry Editor window, in the left pane expand the following key:

   HKEY_LOCAL_MACHINE
4. Expand **SOFTWARE**.
5. Expand **Octel**.
6. In the right-hand panel, double-click **SecurityFlags**.
7. In the **Edit DWORD Value** window in the **Value data** field, change the value from 1 to 2. Click **OK**.
8. Close the Registry Editor window.
9. Reboot the system.

Chapter 11: Upgrading Modular Messaging software on a customer-provided server

This chapter describes how to upgrade a customer-provided server that is running Modular Messaging Release 1.1 software to Modular Messaging Release 3 software.

Note:

Complete the tasks in this section only if you are upgrading a system that is running Modular Messaging Release 1.1 software.

Any systems that are running Unified Messenger Release 5.0 or Modular Messaging Release 1.0 software must upgrade to Modular Messaging Release 1.1 software before upgrading to Modular Messaging Release 3 software.

Topics in this chapter include:

Overview

This chapter describes how to upgrade a Modular Messaging system that is running Modular Messaging Release 1.1 software to Modular Messaging Release 3.

Note:

A Modular Messaging software upgrade requires several server restarts. Plan to do the software upgrade during low-usage hours.

To upgrade the system to Modular Messaging Release 3:

1. Review the configuration notes for any changes that might be needed in the areas of board configuration, switch programming, and application configuration. Make any necessary changes as you do the update.
2. Update the software on each MAS and configure new features as needed. See detailed steps in Preparing the MAS for the upgrade on page 190, Updating the Dialogic port board drivers on page 200, Upgrading Realspeak software on page 201, and Upgrading software components on the MAS on page 202

   Note:

   Completely upgrade and test one MAS first, and let it run for 15 minutes before upgrading any additional MASs. The MASs can be upgraded in any order.
3. Update the client software and the Exchange extensions on each MAS and any other computer where Modular Messaging was previously installed (such as administrator machines or the Exchange server). See detailed steps in Updating client software on page 206

   Note:

   Schedule downtime for the Microsoft Exchange server if the Exchange extensions must be updated. See Chapter 5: Adding Exchange extensions for Modular Messaging on page 71.
4. Perform acceptance tests on the entire system. See Completing the upgrade on page 204.
5. Back up the new data. See Completing the upgrade on page 204.

Because an upgrade includes many steps, print the upgrade checklist from Appendix B: Installation and upgrade checklists on page 231 and use it to track your progress.

CAUTION:

All servers must meet the requirements listed in the *Avaya Modular Messaging Concepts and Planning Guide* (PDF 2 MB), available on the documentation media shipped with the system. Review this document to verify that all Exchange servers, directory servers, MASs, and client machines are ready to support Modular Messaging software.

Considerations for multiple-MAS upgrades

In a multiple-MAS configuration, Avaya strongly recommends that all MASs that are running Release 1.1 software be upgraded to Modular Messaging Release 3 software as soon as possible. During an upgrade MASs in the same Voice Mail Domain (VMD) can run different releases of Modular Messaging. However, at the completion of an upgrade, all MASs in the Voice Mail Domain must be running release 3.

All MASs in the VMD must be upgraded to the same release of Modular Messaging software before you can enable the new Release 3 features.

If you are adding a new Modular Messaging machine to a multiple-MAS configuration, it cannot join an existing VMD that only has Release 1.1 voice servers in it. You must first upgrade one or more of the existing servers, leave the system running for at least 15 minutes, and then add the new Avaya Modular Messaging server.

Upgrade requirements

To successfully upgrade a system to Modular Messaging Release 3, you need:

- Release 3 of the Modular Messaging application software.
  - *Avaya Modular Messaging Messaging Application Server Software* media
  - *Avaya Modular Messaging Documentation*
- The following information and software from the Avaya Support Web site at http://www.avaya.com/support. For more information about how to access these items on the Web site, see Required documentation and software on page 1.
  - The most current copy of the configuration notes for this switch integration.
  - Avaya software updates that are required to bring the Avaya Modular Messaging software up to date after an upgrade. Download this software to a USB storage device. For more information about downloading the updates, see Updating Modular Messaging software on page 279.
  - The latest copy of the Data Collection Tool. Download the DCT update file, **MMDCTDistribute.exe**, from the Avaya support site. Download it to a USB storage device.
- A completed copy of all relevant forms in Appendix A: System planning forms on page 209 and a printed copy of the upgrade checklist for a customer-provided MAS. See Modular Messaging upgrade on a Customer-provided server on page 243.

Note:

For Release 1.1 upgrades, a completed copy of the planning forms should be on file from the previous installation. For all upgrades, review the new version of the forms in Appendix A: System planning forms on page 209 before beginning the software upgrade. Verify that all fields required for any new Release 3 features are completed.

- Modular Messaging Release 3 requires Microsoft Exchange 2003 System Management Tools. If you need to upgrade your Microsoft Exchange System Management Tools at this time, you will require a copy of the customer-provided Microsoft Exchange 2003 media or equivalent access to the 2003 System Management Tools upgrade and the Microsoft Exchange 2003 Service Pack 2.

Switching the monitor to show the correct server

Use whatever method is required at this site to have the monitor display the MAS that you are upgrading. If you are using the Belkin KVM switch, for complete user and troubleshooting instructions, see the KVM switch documentation.

Preparing the MAS for the upgrade

It is important that you record all critical system settings and back up all data in advance.

Complete the following tasks to prepare the Modular Messaging system for an upgrade:

Completing pre-upgrade tasks

Complete the following tasks before you start a Release 3 upgrade. (Record and copy information in the event that the upgrade fails and a new installation of the software is required.)

1. Using the latest copy of the planning forms, verify key settings on the MAS, including:
   - Switch integration settings
   - Port board settings and extensions
   - Domain information
   - Basic system setup
   - Modular Messaging service account and group
   - Exchange settings

   Ensure that you record the following items:
   - In the VMSC for each MAS, record any *non-default* port groups and their names, such as the MWI port group.
   - Under **Routing and Remote Access**, record the IP addresses for the MAS modems in the remote access service (RAS) group. See Table 22: RAS IP addresses for each MAS on page 227.
2. If the site has Caller Applications, ensure that a copy of all editable files is on a separate computer, *not* the MAS.
3. Review the configuration notes for any changes that might be needed regarding board configuration, switch programming, and application configuration. Make any necessary changes as part of the upgrade.

Running recommended disk checks

Avaya recommends that the hard disk drive in the server be maintained to prevent possible problems. The system administrator must run the following on a regular basis:

- Disk Defragmenter system tool
- **chkdsk** command

If this server is in service and has not been recently maintained, run the two recommended procedures before the upgrade.

Creating a Data Collection Tool File

Note:

Always check the Avaya Support Web site at http://www.avaya.com/support for recent updates to the DCT program.

A Data Collection Tool file is not required for the upgrade. However, create one prior to the upgrade to save important system information for backup.

1. Verify that the Modular Messaging system is working properly. All MASs and the Exchange message store must be running.
2. Switch the monitor to show the first MAS.
3. Verify that the messaging services on the MAS are running:
   a. Double-click the **Monitor** icon on the desktop.
   b. Click **Services (Local)** in the left pane, if the item is not already selected.
   c. In the right pane, scroll down to the list of Modular Messaging services. All services start with the abbreviation **MM**.
   d. Verify that the **Status** column shows that service is **Started** for each messaging service that belongs on this MAS. For a list of required services, see Table 19: MAS services and features form on page 224.
   e. If service is not started for a required messaging service, right-click that **MM** service and select **Start**.
4. Insert the USB storage device with the DCT update file **MMDCTDistribute.exe** into a USB port on MAS#1. You can use any of the available USB ports.
5. Unzip the Data Collection Tool.
   a. Navigate to the USB drive, **Removable Disk (E:)**
   b. Double-click the executable file **MMDCTDistribute.exe** and then click **Unzip**.
   c. If this is a multiple-MAS upgrade, be sure a copy of the updated MMDCT.exe file is on your USB storage device.
6. Navigate to the location where you stored the DCT executable file (**MMDCT.exe**). Double click the **MMDCT.exe** file.
7. On the first screen **Select the DCT Configuration to use**, select **Analyze existing system**. Click **OK**.
8. When asked if you want to use an existing DCT file, click **No**.
9. On the **MM System Analysis** screen, select the first MAS from the dropdown list at the bottom of the window. Click **Start**.

   The system displays the process of the data collection.

10. When analysis is complete, you see the message “information has been successfully collected,” The DCT displays the newly created file.
11. For a single MAS upgrade, proceed to step 13. In a multiple MAS system, save the DCT file to a USB storage device.
12. In a multiple MAS system, update the Collection Tool (DCT) file with information from additional MAS’s.
    a. Insert a USB storage device with the DCT file you created for MAS 1 into the USB port on the MAS you are going to analyze.
    b. Navigate to the updated **MMDCT.exe** file on the USB storage device.
    c. Launch the Data Collection Tool by double clicking the **MMDCT. exe** file.
    d. On the first screen **Select the DCT Configuration to use**, select **Analyze existing system**. Click **OK**.
    e. When asked if you want to use an existing DCT file, click **Yes**.
    f. Navigate to the location where you saved the DCT file you created for the first MAS.
    g. Double click this file to select it.
    h. On the MM System Analysis window, choose the number of the MAS you are analyzing from the dropdown list at the bottom of the window. Click **Start**.

    Note:

    Analyze the MASs in numeric order, first to last.

    When upgrading to an S3500 server, you can decrease the number of MASs in the voice mail domain (VMD). Analyze only those MASs that you plan to upgrade. When the upgrade is complete, you must move the Modular Messaging services that are on MASs that were not upgraded to an MAS that was upgraded. For more information about moving MM services, see *Modular Messaging S3500-Family Hardware Maintenance and Additions*.

    At the completion of the upgrade all MASs in the VMD must be running Modular Messaging Release 3. If you do not upgrade an MAS, do not include it in the VMD.

    The system displays the process of the data collection.

    i. When analysis is complete, you see the message “information has been successfully collected.” The DCT displays the newly updated file.
    j. Save the DCT file by overwriting the previous file.

CAUTION:

In multiple MAS systems, review and revise the DCT file after analyzing all MASs that will be upgraded. Information that is manually entered before the final analysis might be overwritten in the analysis of subsequent MASs.

Do not change any data that was populated by the DCT system analysis. There is only one exception to this rule. You can revise the default account names on the **MAS accounts and passwords** screen.

13. Review the completed file. Enter information in empty fields. To complete information, if necessary, use the planning forms from Appendix A: System planning forms on page 209.

    Note:

    Verify that there are no red x's next to the DCT screen names in the left panel. The red x's indicate data that is incomplete or not valid. Information must be complete and valid before you can use this file for a recovery, if needed.

14. When all fields in the DCT are complete, click **Complete** at the bottom of the DCT screen. Save the DCT file to a location that will be included in a system backup. This DCT file will not be used during the upgrade, but is an important backup.

Backing up the MAS

Before beginning the software upgrade, make a current backup of the important system files, including customized tone files, and the DCT file you just created. For this procedure, see Backing up the system on page 147.

Busying out ports

Busyout the ports on the MAS you are upgrading and on the switch before you start the upgrade. Otherwise, messages will spool on the MAS, and add to the upgrade time.

To busyout the ports:

1. The PBX administrator must use the procedures appropriate for this PBX to busyout the ports. Depending on the switch integration, the administrator might be able to temporarily reroute calls to other MASs. If an MAS is unavailable, callers into the system might hear ring-no answer or a busy signal.
2. Switch the monitor to show the MAS.
3. Use the Port Monitor to disable the MAS ports:
   a. Click **Start** > **Programs** > **Avaya Modular Messaging** > **Port Monitor**.
   b. In the Port Monitor window, hold down the **Shift** key or Control (**Ctrl**) key and click to select all the ports.

c. Right-click the port list and select **Disable**.

d. Verify that the status of all ports is **Disabled**.

e. Close the Port Monitor window.

Stop and reset Modular Messaging services

Stop and reset all Modular Messaging (MM) services as follows:

1. Insert the *Avaya Modular Messaging Messaging Application Server Software* media (disk 1) in the DVD drive of the MAS.
2. Navigate to the **Install\MISCM** directory on the media.
3. Double click the StopMMServices.exe file.
4. The StopMMServices tool stops all Modular Messaging services and resets their startup type to manual.

Upgrading and installing Microsoft Windows software

To Upgrade and install prerequisite Microsoft Windows software, you must complete the following procedures described in this section:

1. Upgrade Microsoft Windows operating system to Microsoft Windows Server 2003, if operating system is not already upgraded. See Upgrading Microsoft Windows operating system on page 195.
2. Install and enable Microsoft Windows software components. See Installing and enabling Microsoft Windows software components on page 196.
3. Apply Microsoft Windows Server 2003 Service Pack 1, if not already applied. See Apply Microsoft Windows Server 2003 Service Pack 1 on page 198.
4. Install Microsoft Exchange 2003 System Management Tools. See Installing Microsoft Exchange 2003 System Management Tools on page 198.
5. Apply Microsoft Exchange 2003 Service Pack 2, if not already applied. See Applying Microsoft Exchange 2003 Service Pack 2 on page 199.
6. Verify that anti-virus software is current. See Verifying anti-virus software on page 199.

Upgrading Microsoft Windows operating system

All MASs in the Voice Mail Domain must be running Microsoft Windows Server 2003 for Modular Messaging Release 3. Check with the Windows administrator for site-specific procedures to upgrade the operating system.

You can use the following procedure to check the current operating system running on the server.

1. Right-click **My Computer** and select **Explore**.
2. In Windows Explorer, click **Help** > **About Windows**.
3. Verify that Windows Server 2003 is installed.
4. Click **OK** to close this window.

Installing and enabling Microsoft Windows software components

You must install and enable the Microsoft Windows services described in this section on this MAS.

- If this MAS will have the Messaging Application Server service installed on it (see MAS services and features form on page 224), you must install and enable the IIS Admin and WWW Server Microsoft Windows services to support Modular Messaging Release 3.
- If you must install the Microsoft Exchange System Management Tools for an Exchange 2003 system on this MAS (see Installing Microsoft Exchange 2003 System Management Tools on page 198), you must install and enable the required Microsoft Windows NNTP and SMTP services as described before you install the Microsoft Exchange software.
- If this MAS will have the Messaging Application Server service installed on it, and if Simple Network Management Protocol (SNMP) will be used for alarming at this site (see Support information on page 227), you must install and enable the appropriate Microsoft Windows services to support SNMP.

To install and enable all required Windows services:

1. Log in to an account that has permissions to install software on this computer, such as the local administrator account.
2. Insert the Microsoft Windows Operating System CD in the MAS drive.
3. Click **Start** > **Control Panel** > **Add or Remove Programs**.
4. In the Add or Remove Programs window, in the left column, click **Add/Remove Windows Components**.
5. To install Microsoft Windows services:
   a. In the Windows Components Wizard window, highlight **Application Server**. Click **Details**.
   b. In the Application Server window, verify that the following items show a check mark, or enable them if necessary.
      - Application Server Console
      - ASP.NET
      - Enable COM+ access

c. In the same window, highlight **Internet Information Services (IIS)**, but do not check the box if the checkbox is clear.

d. Click **Details**.

e. In the Internet Information Services (IIS) window, verify that the following items show a check mark:

- Common Files
- Internet Information Services Manager
- World Wide Web Server

Note:

The Internet Information Services items listed above are always required. If you plan to install the Microsoft Exchange 2003 System Management Tools, click the checkboxes to select **NNTP Service** and **SMTP Service**. The SMTP Service automatically selects other required components as needed.

f. In the same window, highlight World Wide Web Server and click **Details**. Verify that World Wide Web Services is checked.

g. Click **OK**.

h. Click **OK** a second time to close the Application Server window.

6. If SNMP alarming is required on this MAS, install the Windows services to support SNMP:

a. In the Windows Components Wizard window, click the checkbox to select **Management and Monitoring Tools**, highlight the selection and click **Details**.

b. In the Management and Monitoring Tools window, click the checkbox to select **Simple Network Management Protocol**. Click **OK**.

7. Complete the wizard to install the selected services.

Note:

If the required services were already installed (all the appropriate boxes were checked), click **Cancel** to close the wizard.

8. When the installation is complete, close the Add or Remove Programs window.

9. After the software is installed, enable each installed service as follows:

a. Right-click **My Computer** and select **Manage**. In the Computer Management window, the left (Tree) pane, expand **Services and Applications**, and then click **Services**.

b. In the right pane, scroll down to the first new service that you installed. Double-click the service to open the properties window.

c. In the properties window:

1. On the **General** tab, verify that the **Startup type** is set to **Automatic**. Set to automatic if it is not.
2. Click **Apply**.

3. Under **Service status**, click **Start**.
4. Wait for service to start, and then click **OK** to close this window.

d. Repeat Steps b and c to enable each of the services you installed. Note that only a subset of these services might be present on a particular MAS.

10. When all services are enabled, close all open windows.

Changing the IIS mode

Complete the following steps to install the components

1. Select **Start**>**All Programs**>**Microsoft Exchange**>**Internet Information Services (IIS) Manager**
2. Expand the local computer
3. Right click **Web Sites** and choose **properties**
4. Select the **Service** tab and uncheck the **run www service in IIS5.0 isolation mode** checkbox.

Apply Microsoft Windows Server 2003 Service Pack 1

SP1 might already be installed on this computer. To verify the service pack version and install an update if needed:

1. Verify the Microsoft Windows service pack version that is installed:
   a. Right-click **My Computer** and select **Explore**.
   b. In Windows Explorer, click **Help** > **About Windows**.
   c. In the version description, verify that Service Pack 1 is installed.
   d. Click **OK** to close this window.
2. If needed, install Microsoft Windows Service Pack 1 on this MAS. Check with the Windows administrator for the appropriate software update procedures to use at this site. For details about this procedure, see the Microsoft Exchange documentation.

Installing Microsoft Exchange 2003 System Management Tools

Complete the following steps to install Exchange 2003 System Management Tools.

Note:

The Microsoft Exchange 2003 System Management Tools must be installed on any MAS that will have any of the following services installed on it:

- Messaging Application Server
- Call Me Server

- Message Waiting Indicator (MWI) Server.

  Exchange 2003 System Management Tools are required, Exchange 2000 System Management Tools are not supported.

a. Insert the customer-provided Microsoft Exchange 2003 Server media in the MAS drive.

b. Install the Management tools by completing the Microsoft Exchange Installation Wizard.

c. If you receive a compatibility warning, click **Continue**.

d. For details about this procedure, see the Microsoft Exchange documentation.

Applying Microsoft Exchange 2003 Service Pack 2

If needed, install Microsoft Exchange2003 Service Pack 1 on this MAS. Check with the Windows administrator for the appropriate software update procedures to use at this site. For details about this procedure, see the Microsoft Exchange documentation.

At this time, also apply any additional Microsoft Windows system updates, security patches, and hot fixes needed to update the system according to site update procedures.

Verifying anti-virus software

Verify that the anti-virus software is current. The virus-checking software used and the update methods required vary per local implementation.

Install MSDE upgrade

Install the MSDE upgrade to convert the FEDB database to SQL. To install the MSDE upgrade, complete the following steps:

1. Insert the *Avaya Modular Messaging Messaging Application Server Software* media (disk 1) in the MAS DVD drive.
2. In Explorer navigate to the Install\System Upgrade\MSDE directory.
3. Double click on the MSDE.bat file.
4. After the utility runs, close the explorer window.

Updating the Dialogic port board drivers

Do this task on each MAS that contains Dialogic port boards.

This section describes how to update the drivers for the Dialogic port boards as part of a Release 3 software upgrade.

Note:

If this MAS uses an IP H.323 or IP SIP switch integration, you do not need to update the Dialogic drivers. Continue with Upgrading software components on the MAS on page 202.

Updating the drivers on a Release 1.1 system

This section describes how to update the Dialogic drivers on an MAS that is running Modular Messaging Release 1.1 software.

1. Uninstall Dialogic drivers
   a. Insert the *Avaya Modular Messaging Messaging Application Server Software* media (disk 1) in the DVD drive of the MAS.
   b. In Windows Explorer, navigate to the **Dialogic Drivers** directory on the media.
   c. Double click the MMDialogicUninstall.bat file.
   d. If you receive a Remote Shutdown dialog warning box, enter a reason for a restart.

      If you do not receive the warning, the system restarts automatically.
2. Reinstall Dialogic drivers
   a. After the restart, log back into the server.
   b. In Windows Explorer, navigate to the **Dialogic Drivers** directory on the media.
   c. Double click the MMDialogicInstall.bat file. The Dialogic Setup wizard launches.
   d. Complete the wizard accepting all default selections.
   e. On the final screen of the wizard, choose to restart the computer.
3. Upgrade Dialogic drivers
   a. After the restart, log back into the server.
   b. In Windows Explorer, navigate to the **Dialogic Drivers** directory on the media.
   c. Double click the MMDialogicUpgrade.bat file.

   When the upgrade utility completes, the Dialogic update is finished.

Upgrading Realspeak software

This section describes how to update the Realspeak driver and languages as part of a Release 3 software upgrade.

To upgrade Realspeak Software, complete the following steps:

1. Uninstall Realspeak software
   a. Insert the *Avaya Modular Messaging Messaging Application Server Software* media (disk 2) in the DVD drive of the MAS.
   b. Navigate to the **Realspeak** directory on the media.
   c. Double click the uninstallRS3.bat file.
2. Reinstall the Realspeak software
   a. In the **Realspeak** directory on the media, double click the installRSEngine.bat file.

      When the installation is complete, the system automatically reboots.
3. Reinstall the Realspeak languages
   a. After the restart, log back into the server.
   b. In Windows Explorer, navigate to the **Realspeak** directory on the media.
   c. Double click the installRSLangs.bat file.
4. After languages are updated, leave the Modular Messaging Applications directory window open.

Upgrading software components on the MAS

Do this task on each MAS.

This section describes how to upgrade required application software on the Messaging Application Server (MAS).

To Upgrade application software, you must complete the following procedures described in this section:

- Upgrading Modular Messaging software on page 202.
- Installing software updates on page 204.
- Completing the upgrade on page 204.

Upgrading Modular Messaging software

Note:

If anti-virus software is installed, Avaya recommends that you disable it while you upgrade the Modular Messaging software to prevent possible negative interactions. Enable the virus-checking software again after the upgrade is complete.

To upgrade the software on this MAS to Modular Messaging Release 3:

1. Run the Modular Messaging Installation Wizard as follows:
   a. In Windows Explorer, navigate to the **Install** directory on the *Avaya Modular Messaging Messaging Application Server Software* media (disk 1).
   b. Double-click the **Setup.exe** file.

      The Avaya Modular Messaging Installation Wizard launches. All components that were previously installed on this machine, and the Diagnostic tools, are automatically selected. These selections cannot be changed. The currently installed version is displayed to the right of the specific tool or application. The version that will be installed is displayed at the top of the page following the Avaya Modular Messaging title.
   c. Check the box for Snapshot Utility, Web Subscriber Options and any additional components that are necessary for this MAS and click **Install**
2. In the System Upgrade window, click **Run System Upgrade**.
3. When prompted, click **Restart** to continue the upgrade.

4. When the reboot is complete, log in as the Modular Messaging customer account (such as *mmacct*). See Item **A12** on the Modular Messaging logon accounts form on page 221.
5. When prompted, enter the name and password for the account that Modular Messaging Services will use. This is the name of the Modular Messaging customer account, such as mmacct. See Item **A12** on the Modular Messaging logon accounts form on page 221. Do not select the Local System Account default.

   The new Modular Messaging software is installed.
6. When the Installation Wizard reappears with the flashing warning that the installation is not complete, restart windows.
7. When the reboot is complete, log in as the Modular Messaging customer account (such as *mmacct*). See Item **A12** on the Modular Messaging logon accounts form on page 221.

   After you log in, the Messaging Application Server Configuration Wizard launches the Front End Database Update.
8. Click **Next** to continue.

   Note:

   This step might take several minutes for a large database or global address list (GAL).
9. The upgrade procedure compares the prompts installed on the MAS with the existing voice mail domain prompts. If any prompts are absent, the Missing Prompts screen is displayed showing a list of the prompts that must be installed before the installation can continue. To do this:

   a. On the Missing Prompts screen, note the missing prompt sets. The configuration wizard automatically attempts to locate the installation packages for these prompts.

   b. If any installation packages cannot be found, a **Locate Installation Package** message is displayed. Click the text, and then click **Browse**.

   c. In the Browse for Folder window, navigate to the **Prompts** directory.

   d. Select the folder containing the missing prompts, and click **OK**.

   e. Repeat Steps b through d for all prompts that cannot be found.

   f. When finished, click **Next**. (This button is not enabled until all the prompt installations are found.)
10. Click **Finish** when the update is complete.
11. Remove the media from the DVD drive.
12. If you disabled the anti-virus software on this MAS, enable it again now.

Installing software updates

A new Modular Messaging system ships with the most current software that is available at the time. However, the software must be updated after an installation or upgrade to include the latest changes. The updates might be in the form of an Avaya Service Pack (SP) or a software patch (hot fix).

To determine if a Modular Messaging software update is needed:

1. Locate any relevant Avaya software updates on the Avaya Support Web site at http://www.avaya.com/support. For complete steps, see Obtaining software updates from the Web on page 279.

   Note:

   If you followed the procedure for Obtaining software updates on the Web on page 3, you already downloaded any required software updates.

2. If the Modular Messaging system requires a software update, complete the update procedure now before you do acceptance testing. Follow the instructions in Appendix E: Updating Modular Messaging software on page 279 to update the system with the latest changes.

Completing the upgrade

Continue the Modular Messaging software upgrade as appropriate:

1. If you have more than one MAS:

   a. ***For the first MAS installed only,*** let the Modular Messaging software run for 15 minutes so that it can update shared data across the voice mail domain. Return to Upgrading and installing Microsoft Windows software on page 195 to begin upgrading the next MAS.

   b. Repeat the Modular Messaging software upgrade procedure until all MASs are upgraded.

2. You must update the Modular Messaging Active Directory Exchange extensions software on any machines where it is installed. This might include Exchange servers and client machines used for subscriber administration (any Exchange extensions on an MAS were updated with the rest of the Modular Messaging software). See Adding the Exchange extensions on page 74.

Note:

The Modular Messaging Active Directory Exchange extensions are updated along with any other Modular Messaging software that is installed on this machine (multiple Modular Messaging software component checkboxes might be checked). This ensures that all currently installed components are upgraded. The components are installed in the correct order when you click **Install**.

3. Configure new Release 3 features. For more information, see Configuring new features for Release 3 on page 206.
4. Update the client software on any non-MAS machines where it is installed. See Updating client software on page 206.
5. For any MAS that does not have Web Subscriber Options installed, close TCP port 80 to increase system security. For complete instructions for closing the port, see your Microsoft documentation. For information about how Modular Messaging uses TCP/IP ports, contact your Avaya or business partner account team.
6. Set up test subscribers and perform all acceptance tests that are relevant to the system. See Testing and backing up the system on page 135.
7. When acceptance tests are complete, back up each MAS using the regular backup procedures for this site. For guidelines, see Backing up the system on page 147.
8. When finished with each MAS, verify that the MAS is in good condition by running the Disk Defragmenter system tool.
9. If you are adding a new MAS to this system, begin the installation now.
   - To install a new Avaya Messaging Application Server (Avaya MAS), begin with Chapter 2: Installing Avaya-provided hardware on page 9.
   - To install a new customer-provided MAS, begin with Chapter 3: Installing Dialogic port boards in a customer-provided MAS on page 43.

   Print the appropriate checklist from Appendix B: Installation and upgrade checklists on page 231 and use it as a guide.
10. When finished, save all planning forms in a safe place.

Configuring new features for Release 3

Configure and activate new features for this release using the Voice Mail System Configuration program after the new Modular Messaging software is configured:

1. Verify that all services are started:
   a. Right-click **My Computer** and select **Manage**. In the Computer Management window, the left (Tree) pane, expand **Services and Applications**, and then click **Services**.
   b. In the right pane, scroll down to the list of Modular Messaging (MM) services. Verify that the Status column shows that service is **Started** for each installed messaging service.
   c. If service is stopped or if the Status column is blank, right-click the appropriate MM service and select **Start**.
2. When finished, close all open windows.

Updating client software

Note:

If you are not updating to the new release of Subscriber Options, see Changing security setting on page 207.

Do this task on each subscriber machine where client software is installed.

The Modular Messaging client software packages (such as Subscriber Options) must be updated on each subscriber machine where they are already installed.

To update the client software to the latest release:

1. Log in to each subscriber machine where a Modular Messaging client software package from the previous release is installed. You must use an account with administrator rights to install software (such as the local administrator account for the client machine).
2. Install a new version of the client software using the normal software installation procedures for this site. For example, to reinstall the client software from the Modular Messaging software media:
   a. Insert the *Avaya Modular Messaging Messaging Application Server Software* media (disk 1) in the machine's drive, or into the shared DVD drive of another machine that is mapped as a network drive on this machine.
   b. Navigate to the **Install\Client Distrib** directory on the appropriate drive (such as D:).
   c. Double-click the **Setup.exe** file.
   d. The Avaya Modular Messaging Client Installation Wizard runs. Follow the prompts.

   The reinstallation process removes the old software and installs the newest version.

3. Repeat this procedure until all existing versions of client software have been replaced with the version for the newest release.

For details on installing or using a client software package, see the appropriate user guide, listed in the reference section on the documentation media.

Changing security setting

If you are not updating Subscriber Options to the new release, you must edit the security setting to enable Subscriber Options to work with Modular Messaging Release 3. Complete the following steps to edit the setting.

1. Click **Start** > **Run**.
2. In the Run window **Open** field, type **regedit** and press **Enter**.
3. In the Registry Editor window, in the left pane expand the following key:

   HKEY_LOCAL_MACHINE
4. Expand **SOFTWARE**.
5. Expand **Octel**.
6. In the right-hand panel, double-click **SecurityFlags**.
7. In the **Edit DWORD Value** window in the **Value data** field, change the value from 1 to 2. Click **OK**.
8. Close the Registry Editor window.
9. Reboot the system.

Appendix A: System planning forms

The Installation of a new Modular Messaging system requires careful network planning. Server names, IP addresses, domain names, accounts, extensions, and passwords must be administered correctly on each of the servers in the system. The customer must provide some of the information in advance, or the installation cannot proceed.

CAUTION:

Use each set of planning forms *only* with the same issue of the document that they support. Fields are added or changed between software releases. The planning forms that support this issue of the *Installation and Upgrades* guide are different from planning forms that supported earlier releases.

You must license new systems using Remote Access Feature Activation (RFA). Authorized personnel must be trained in RFA and registered for Avaya Modular Messaging before they can request a license. For complete licensing steps and contact information for RFA assistance, see *Getting Started with RFA for Modular Messaging* on the http://rfa.avaya.com Web site.

Reviewing the planning forms and DCT data file

Check with your regional representative about the procedures you must use to submit and review the planning forms and the Data Collection Tool (DCT) data file. Avaya strongly recommends that an expert reviews this information before any installation or upgrade.

- In North America, the Solution Support Organization (SSO) Tier III group must review the planning information for accuracy and thoroughness. Send the completed set of planning forms and the DCT data file by e-mail to mmtac@avaya.com. Title the e-mail *MM Planning Forms for Tier III Review*. An SSO Tier III engineer reviews the information, notes any changes, and returns the forms and data file to the field contact.
- Avaya recommends that Business Partners also use the MMTAC organization to review their planning forms and DCT data files.

CAUTION:

Installers update or complete the planning forms and DCT data file as part of a normal installation or upgrade. Ensure that you return any updated copies to the customer, the project planner, and the appropriate remote support organization.

Avaya recommends that Business Partners file their final, approved planning forms and DCT data files with the MMTAC organization. This action provides a backup of vital system information. However, Avaya advises Business Partners to specify that MMTAC representatives not dial in to systems that Business Partners maintain, unless previously authorized.

Note:

You can use the DCT to help complete the information on the planning forms. The DCT program validates many entries and has online help. For more information, see the screen-specific help section of the DCT online help system or its printed version, *Avaya Modular Messaging Data Collection Tool Help*.

CAUTION:

For Release 3 upgrades, compare the new planning forms against the planning forms that are on file. Update any fields are needed. Verify all information against the actual system administration if possible. The upgrade erases all existing data.

Completing additional planning forms

You might need to complete additional planning forms for certain adjuncts. For the latest version of the planning forms, see the Avaya Support Web site at http://www.avaya.com/support:

- If the Modular Messaging system is to be networked to any legacy messaging systems through the Avaya Message Networking system, complete the corresponding Message Networking Planning Form. The network planning form is available on the documentation media for the Message Networking product.
- If a Unified Communication Center Speech Access (UCC SA) server is to be part of the system configuration, complete the planning forms for that server. See the appendix of the *Avaya Unified Communication Center Speech Access (UCC SA) Release 2.0.2 Site Preparation Guide* at http://support.avaya.com/elmodocs2/ucc/R2.0/SPGuide.pdf.

Terminology

The following terminology applies to the LAN administration process.

Avaya MAS. A Messaging Application Server (MAS) where the hardware is provided by Avaya Inc., often with other optional peripheral devices. The port boards and much of the required software are pre-installed on an Avaya MAS.

Corporate IP LAN and interface. Each MAS is connected to the LAN infrastructure constructed and maintained by the enterprise that purchased the system. The LAN is the corporate IP LAN, and might be identified as Local Area Connection 2 or Corporate LAC on an Avaya MAS. This LAN gives the MAS access to other machines and users.

Default IP gateway. The IP gateway to use if no other specified gateway is available. Each MAS has at most one default gateway connected to the corporate IP LAN.

Directory server. A server that contains the subscriber mailboxes, such as Active Directory or the Microsoft Exchange Administrator application.

Domain name. A unique designator used to identify a group of related computers on the internet (for example, *avaya.com*). Domain names are hierarchical, and the labels go from more specific on the left to more general on the right. There can be any number of levels in the hierarchy.

Domain Name Service (DNS). An Internet protocol service most often used to resolve symbolic names to IP addresses. The DNS service is constructed on hierarchical domains with different sets of servers serving each hierarchical layer.

DNS server. A machine that has the DNS service active. Such a machine can resolve symbolic names for the DNS domain it serves to an IP address.

Exchange server. A server that is running a compatible release of Microsoft Exchange software.

Fully Qualified Domain Name (FQDN). A domain name that identifies an individual computer and the network on which the computer resides, such as *mymas1.loc.avaya.com*. The leftmost label is the primary name of the computer. This name is usually the host name, but not always.

Host name. The unique name of the machine. In Microsoft Windows terminology, this is often called the NetBIOS machine name.

Initialization and Administration System (INADS). The Avaya remote service support program for monitoring alarms and maintaining installed systems.

IP address. A value used to identify a computer connected to a network. If a machine has multiple network interfaces, it will have multiple IP addresses, one for each connection to a different network. IP addresses are usually specified as four numbers separated by a period (for example, *10.9.55.183*).

IP gateway. An IP address where IP packets are routed if the specified IP address is not on the network directly connected to an interface on the machine. An IP gateway is usually an interface on a router.

Messaging Application Server (MAS). Any Microsoft Windows-based machine that is running Avaya Modular Messaging software. A customer-provided MAS has some different prerequisite hardware and software requirements than an Avaya MAS (for example, the port boards and additional Windows software must be installed), but the software installation and administration is nearly identical for both platforms.

NetBIOS domain. A Microsoft Windows domain that is not fully qualified (has no periods). For example, *zodiac*.

NetBIOS name. The Microsoft Windows term for a host name, also called a NetBIOS machine name.

Point-to-Point Protocol (PPP). An Internet standard protocol used for serial line connections, such as dial-up modems.

Subnet mask. A value used to tell which bits of an associated IP address are the network portion and which bits identify the specific host on the network. Each network interface has an IP address and an associated subnet mask.

Voice Mail Domain (VMD). A group of one or more messaging application servers. Messaging (or voice) servers in a VMD share configuration properties of the VMD and subscribers to the VMD.

Windows domain. A grouping of network objects, such as users, groups, and computers. All objects in a domain are stored on the directory server, such as Active Directory. A directory can reside on one or more domain controllers within a domain.

Modular Messaging System Planning Form

For complete information about fields on this form, see the screen-specific help section of the DCT online help system or its printed version, *Avaya Modular Messaging Data Collection Tool Help*.

Table 14: Modular Messaging System Planning Form

#	Item	Value	Notes
1	Company name		The system logon screen shows this information.
2	Organization name		
3	Message store—choose one	___Microsoft Exchange using own hardware ___Microsoft Exchange using Avaya hardware	
4	Contact information for Windows domain administrator*		
5	Contact information for message store (Microsoft Exchange) administrator		
6	Voice mail domain name		
7	Number of MASs in the VMD		
8	Corporate network connection—choose one	___Connect to corporate network using specified (static) IP addresses ___Connect to corporate network and obtain IP addresses automatically using DHCP	
9	Switch integration—choose one	___ Avaya CM (IP SIP) ___ Avaya (IP H323) ___ Avaya (QSIG) ___ Cisco (QSIG) ___ Nortel NT M-1 (QSIG) ___ Siemens Hipath (QSIG) ___ Other—specify: _____	

Table 14: Modular Messaging System Planning Form

#	Item	Value	Notes
10	Folder for offline access to messages—specify the MAS and folder name		
11	Modular Messaging customer account group name:		
12	Active Directory users or groups who require system administration access: Active Directory users or groups who require subscriber administration access:		

Corporate Network Planning Form

For complete information about fields on this form, see the screen-specific help section of the DCT online help system or its printed version, *Avaya Modular Messaging Data Collection Tool Help*. The fields in this form are ordered to correspond with the process of entering data in the Data Collection Tool.

Copy this form as many times as needed to cover all MASs.

CAUTION:

You must coordinate the IP addresses that will be used on the Modular Messaging servers with those on the corporate LAN. If you specify an Ethernet address for an Avaya server that conflicts with another Ethernet endpoint, the resulting traffic problems on the local area network can be extremely difficult to diagnose and solve. Work with the LAN administrator to identify and correct any potential addressing problems or conflicts.

To complete Table 15: Corporate network planning form on page 216:

1. Item **C1**: Choose unique NetBIOS machine (host) names for all MASs, such as *mymas1,* and *mymas2*. You must keep track of what server you are administering. In this guide, *mymas1* is MAS#1, and *mymas2* is a subsequent MAS.

   Avaya recommends host (machine) names shorter than 10 characters long for ease in entering information online. The host name and domain name can each be 1 to 15 characters long. The complete computer name plus domain name must be 64 or fewer characters long, such as *mymas1.loc.avaya.com*. The computer host and domain names can be any unique term that complies with local conventions.

   CAUTION:

   Use only numbers and lowercase characters for computer host names and domain names. Do not use any special characters except a hyphen (-). The first character cannot be a numeric character.

2. Items **C2** through **C10**: Enter the required corporate network information. The corporate IP or LAN administrator must supply these values. Corporate information includes:

   - The full corporate computer name for each server, also called the Fully Qualified Domain Name (FQDN)
   - All required IP addresses and domain names
   - Windows Internet Name Service (WINS) information, if used

   Note:

   The corporate IP administrator must supply the IP address for any required DNS or WINS servers on the corporate LAN.

   Follow these guidelines to complete the corporate information:

- The MASs in a Modular Messaging system can use Dynamic Host Configuration Protocol (DHCP) to obtain IP addresses automatically. If this site uses DHCP, do not enter IP addresses for Items C3 and C5.
- The corporate LAN administrator must supply the domain search order and any domain names in the required order. The LAN administrator must also provide any aliases for the Modular Messaging computers, if required for the corporate interface. The alias might be the host name of the computer, such as *mymas1*. An alias might also be some other NetBIOS name, such as *primname.loc.avaya.com*, depending on the corporate setup.

Note:

All Modular Messaging servers must be in the same Windows domain and on the same LAN segment, whether provided by the customer or Avaya Inc. LAN personnel must configure IP addresses on the corporate DNS servers in keeping with local policy and practices. Customers must also register the corporate FQDNs for each MAS on any relevant corporate DNS servers.

Table 15: Corporate network planning form

#	Item	MAS #1	MAS #2
C1	Host name (machine or Windows NetBIOS name)		
C2	Corporate domain name		
C3	Subnet mask (for corporate LAN interface)		
C4	Full computer name (MAS Fully Qualified Domain Name)		
C5	IP address (MAS IP address on corporate LAN)		
C6	DNS server IP addresses in order of use		
C7	Search order of DNS domains		
C8	Default gateway IP address		
C9	WINS IP address (if required)		
C10	Microsoft Windows domain		
C11	Peer Exchange server		

Table 15: Corporate network planning form

#	Item	MAS #1	MAS #2
C12	Peer directory server		
C13	Non-default Active Directory container for Modular Messaging service accounts (if needed).		
C14	Non-default software installation path		
C15	Register the IP address for this connection in the DNS? Register the DNS suffix in the DNS?		
C16	Static IP addresses for remote access (2 required per MAS)		

CAUTION:

The following planning form shows a completed example for a two-MAS system. These sample values are used in this guide for illustration purposes only. Do not use these values in your system

Table 16: Corporate network planning form (completed example)

#	Item	MAS #1	MAS #2
C1	Host name (machine or Windows NetBIOS name)	mymas1	mymas2
C2	Corporate domain name	loc.avaya.com	loc.avaya.com
C3	Subnet mask (for corporate LAN interface)	255.255.255.0	255.255.255.0
C4	Full computer name (MAS Fully Qualified Domain Name)	mymas1.loc.avaya.com	mymas2.loc.avaya.com
C5	IP address (MAS IP address on corporate LAN)	10.9.83.72	10.9.83.73
C6	DNS server IP addresses in order of use	10.9.1.39 10.9.1.2	10.9.1.39 10.9.1.2

Table 16: Corporate network planning form (completed example)

#	Item	MAS #1	MAS #2
C7	Search order of DNS domains	loc.avaya.com avaya.com	loc.avaya.com avaya.com
C8	Default gateway IP address	10.9.83.254	10.9.83.254
C9	WINS IP address (if required)	10.9.62.39	10.9.62.39
C10	Microsoft Windows domain	domain1	domain1
C11	Peer Exchange server	exchange1	exchange1
C12	Peer directory server	directory1	directory1
C13	Non-default Active Directory container for Modular Messaging service accounts (if needed).	CN=Octel,DC=looney,DC=rnd,DC=avaya,DC=com	
C14	Non-default software installation path	D:\Program Files\Avaya Modular Messaging	
C15	Register the IP address for this connection in the DNS? yes Register the DNS suffix in the DNS? yes		
C16	Static IP addresses for remote access (2 required per MAS)	10.152.5.24 10.9.6.8	10.152.5.24 10.9.6.8

Clients and optional applications form

Make a checkmark next to the client packages and other optional applications that you want to use at this site. You must install all required client software after an installation or upgrade.

Table 17: Client and software applications for this site

✔	Client or software application	Notes
	Avaya Modular Messaging Subscriber Options, also known as Modular Messaging (MM) Client	Automatically installed with Active Directory extensions.
	Modular Messaging Web Subscriber Options	___ Install on its own server ___ Install on an MAS, see Table 19: MAS services and features form on page 224
	IBM Lotus Notes Client	
	Microsoft Outlook Client	
	Unified Communication Center Speech Access	
	Networked Modular Messaging or Message Networking	
	Avaya Site or Multi-site Administration	

MAS Logon Accounts Form

For complete information about fields on this form, see the screen-specific help section of the DCT online help system or its printed version, *Avaya Modular Messaging Data Collection Tool Help*.

Account logon names and passwords should be site-specific for security reasons.

CAUTION:

Passwords for Modular Messaging accounts must be at least 8 characters long. Do not create passwords composed of easily guessed words or numeric combinations, including sequential or repeated numbers. You must use a combination of at least three of the following character types: uppercase and lowercase letters, numbers, and special characters or symbols

- *Account names:* MAS account names must be between 7 and 32 characters long. In addition to alphanumeric characters, you can use the special characters underscore (_), period (.), and dash (-) in account names, but not the symbols “/ \ [ ] : ; | = , + * ? < > or space. The account name for each MAS must be unique. Avoid using the word “craft” in the in the Technical Support account name or “cust” in the Customer account name. See the DCT online help for more specific rules for account names and passwords.
- *Passwords:* MAS passwords must be between 8 and 32 characters long. At least one of the first 7 characters should be a symbol or a punctuation mark. Do not use a pound sign (#) as the first character. Do not use a percent symbol (**%**) anywhere in the password.
- Ensure that you are satisfied with Modular Messaging account names and passwords before you administer them. They are not easy to change later.
- Do not use the examples shown in this guide as the actual MAS account names. They are provided for example purposes only.

Note:

For upgrades, you might have to change the existing account names and passwords to comply with the Release 3 rules. You cannot proceed with the upgrade unless you enter compliant account names and passwords into the DCT. The account names and passwords are the only fields you can change in a DCT file after analyzing an MAS.

Using the Data Collection Tool

You must enter MAS passwords and account names into the Avaya Modular Messaging Data Collection Tool (DCT) to do an installation or Avaya MAS upgrade. The DCT follows the rules describes in this section. The tool flags discouraged entries with a yellow highlight and marks

invalid entries with a red border. You must change invalid entries before you can configure the system.

For more information about creating or editing account names and passwords, see the help system for the Avaya Modular Messaging Data Collection Tool (DCT). This information is also available in a printed document *Avaya Modular Messaging Data Collection Tool Help.*

The DCT is contained in a single executable file named MMDCT.exe. Obtain an updated copy of the DCT from the Avaya Support Web site at http://www.avaya.com/support.

Note:

You must enter the MAS passwords and account names into the Modular Messaging Data Collection Tool for a new installation or upgrade. The Data Collection Tool follows the rules described in this section. The tool flags discouraged entries with a yellow (caution) highlight, and marks invalid entries in red. You must change any invalid entries before you can configure the system.

Table 18: Modular Messaging logon accounts form

#	Account	Logon name (customer specified)	Password	Used for
A1	Local administrator account for MAS#1 (required)	*customer specified* (for example, **mas1-admin**)		Local administration for this MAS
A2	Local administrator account for MAS #2 (if present)	*customer specified* (for example, **mas2-admin**)		Local administration for this MAS
A3	Local administrator account for MAS #3 (if present)	*customer specified* (for example, **mas3-admin**)		Local administration for this MAS
A4	Local administrator account for MAS #4 (if present)	*customer specified* (for example, **mas4-admin**)		Local administration for this MAS
A5	Local administrator account for MAS #5 (if present)	*customer specified* (for example, **mas5-admin**)		Local administration for this MAS
A6	Local administrator account for MAS #6 (if present)	*customer specified* (for example, **mas6-admin**)		Local administration for this MAS

Table 18: Modular Messaging logon accounts form

#	Account	Logon name (customer specified)	Password	Used for
A7	Local administrator account for MAS #7 (if present)	*customer specified* (for example, **mas7-admin**)		Local administration for this MAS
A8	Local administrator account for MAS #8 (if present)	*customer specified* (for example, **mas8-admin**)		Local administration for this MAS
A9	Local administrator account for MAS #9 (if present)	*customer specified* (for example, **mas9-admin**)		Local administration for this MAS
A10	Local administrator account for MAS #10 (if present)	*customer specified* (for example, **mas10-admin**)		Local administration for this MAS
A11	Local administrator account for MAS #11 (if present)	*customer specified* (for example, **mas11-admin**)		Local administration for this MAS
A12	Customer account[1]	*customer specified* (for example, **mmacct**)		Customer administration account
A13	Technical support account	*customer specified* (for example, **techacct**)		Maintenance remote access account

1. The customer account was previously referred to as the service account. It is the account used to install and administer the Modular Messaging system.

MAS Services and Features Form

Working with the customer, fill out the following table to specify the Modular Messaging services and optional features to install on each MAS.

Note:

In a multiple-MAS system the following services must be enabled and running on only one MAS in the voice mail domain: **MM Call Me Server**, **MM Mailbox Monitor Server, MM Message Waiting Indicator Server** and **MM Tracing Server**.

Follow these guidelines:

- If only one MAS is installed, put all required services on that computer. Check off the features to install in the MAS#1 column.
- If more than one MAS is installed:
  - If both Call Me and Message Waiting Indicator (MWI) service are to be installed at this site, they must be on the same MAS.
    - Install these services on the MAS with the fewest ports if possible.
    - Install these services on the MAS with the second fewest ports if the Tracing Server is to be installed. The Tracing Server places the greatest demand on an MAS.
    - If this system uses a supplementary Tracing server, you can place the Call Me and MWI services on the supplementary server.
  - Always put the Tracing Server on the MAS with the fewest ports, or on its own computer.

Note:

For the recommended distribution of Modular Messaging services based on the number of MASs, see the *Avaya Modular Messaging Concepts and Planning Guide* (PDF 2 MB). The planning guide is available on the documentation media and from the Avaya Support Web site at http://www.avaya.com/support.

The Modular Messaging configuration program automatically installs the Caller Applications Editor on each MAS.

Up to ten MASs can handle calls. An additional supplementary server can provide special services like Call Me, MWI, or Tracing Server service. Although the supplementary server is sometimes called an MAS, the server cannot handle calls. A supplementary server can use Avaya or customer-provided hardware.

For complete information about fields on this form, see the screen-specific help section of the DCT online help system or its printed version, *Avaya Modular Messaging Data Collection Tool Help*.

Table 19: MAS services and features form

Messaging service to install	Max. # of sessions:[1]	MAS assigned to:										
		1	2	3	4	5	6	7	8	9	10	11
Message Waiting Indicator (MWI) Server Call Me Server *Both MWI and Call Me use the Mailbox Monitor Server. All three servers **must** be on the same MAS if any are installed. Activate these services on only one MAS per voice mail domain (VMD).*	N/A											N/A N/A
Web Subscriber Options[2]	N/A											
Tracing Server *(Install only once per VMD.)*	N/A											
Text-to-Speech *(If required, note languages to use. Specify up to 12 sessions for each MAS.)*												N/A
Messaging Application Server Prompt Files *(One set is required for each MAS that will run the Messaging Application Server software. List the default file set first and any additional prompt file sets if needed.)*	N/A											N/A
Language Packs *(Specify additional languages to install if needed. List the desired default language first. Install the same set of languages on each MAS.)*	N/A	Default language: List all languages to install:										

1. Specify the maximum number of concurrent sessions for a feature based on expected usage. For guidelines, see the configuration notes and the *Avaya Modular Messaging Concepts and Planning Guide*.

2. The Web Subscriber Options application can reside on its own server or co-resident on an MAS. If Web Subscriber Options (WSO) is to be installed on an MAS, indicate which server.

Switch and Messaging Information Form

Collect the required information from the relevant administrator before installation. Always obtain the latest configuration notes for this particular switch (PBX) and integration. For more information, see Required documentation and software on page 1.

Table 20: Switch and messaging information

Item	Value	Notes
Type of switch or PBX: Integration method: Example: *Avaya Definity G3, T1 QSIG*.		Configuration note used for this integration: Number: Version: Date:
Record required switch integration information. Use the configuration note to determine required items, such as: IP address for IP SIP, IP H.323, and CLAN integrations. Switch trunk, signal, or hunt groups and routing pattern. IP address for SIP Enablement Services (SES) proxy server, required for IP SIP integrations		
If required for this integration, list the extension numbers for the ports on the MAS, and the switch ports to which they connect. **Note:** For greater reliability, distribute the port board extensions over several switch boards if possible. You might need to obtain the required information from the telephone system vendor.	*Use format:* *cabinet carrier slot port*	*Connects to extension number:*
Direct Inward Dialing (DID) numbers for: ● MM hunt group for messaging services: ● MAS modem dial-in number—one for each MAS ● MAS#2, if present ● MAS#3, if present, and so on for up to the 11 MAS limit in the VMD **Note:** Provide complete dial-in number for each item.		

Table 20: Switch and messaging information

Item	Value	Notes
Numeric Address Number of digits in dial plan: _____		
Are port groups required? Use configuration notes. If yes, supply group name, use, and number of ports. Example: *MWI outgoing only, 2 ports*.	*Port group 1 (Default)*: Number of ports:	*Port group 2*: Number of ports:

Table 21: Mailbox and subscriber information

Item	Value
Telephone user interfaces required: MM Aria (y/n)___ MM AUDIX (y/n)___ MM Serenade (y/n)___	
Test subscriber name for MM Aria: ● Extension number to test telephone with DID ● Password—must be numeric ● Class of service (cos) to use	
Test subscriber name for MM AUDIX: ● Extension number to test telephone with DID ● Password—must be numeric ● Class of service (cos) to use	
Test subscriber name for MM Serenade: ● Extension number to test telephone with DID ● Password—must be numeric ● Class of service (cos) to use	
Additional mailboxes, if needed: Broadcast Mailbox	

Note:

You can expand Table 21 to include additional mailboxes that must be set up at time of installation. For example, you might include mailbox, password, community ID, class of service (cos), and other required information for:

- System broadcast mailbox
- Other features or restrictions required for this site, such as Caller Applications.

Support information

Fill out the appropriate section, depending on how alarming will be implemented at this site: either through the Avaya Initialization and Administration System (INADS) or through the corporate Simple Network Management Protocol (SNMP) system.

Note:

If SNMP alarming is used, it is the responsibility of the customer to provide and provision the SNMP network management system, and to configure it to receive (and optionally acknowledge) the traps generated by the Modular Messaging system.

General alarming information

Technical support information required for each installation includes:

- Alarming notification used at this site (INADS, SNMP, or none): _____
- Product ID number: _____

Note:

Product IDs must be ten numeric digits (0 through 9) long. The Avaya Automatic Registration Tool (ART) generates product IDs for Avaya servers when you register the system.

To enable remote support, record the RAS IP addresses for each MAS in the system. Complete Table 22 before an upgrade, or after you register a new system in ART.

Table 22: RAS IP addresses for each MAS

Modular Messaging Server	Starting IP address [1]	Ending IP address
MAS#1		
MAS#2		
MAS#3		
MAS#4		
MAS#5		
MAS#6		
MAS#7		
MAS#8		

Table 22: RAS IP addresses for each MAS

MAS#9		
MAS#10		
MAS#11		

1. For systems that Avaya maintains, use the ART-assigned IP address for the **Start** value, such as *10.27.00.29*. Add 1 to create the **End** value, such as *10.27.00.30*.

CAUTION:

Each MAS has a unique product key for the Windows 2003 operating system. Enter the number exactly as shown.

Note:

On a new S3500-family server, the product key sticker is located inside the empty drive tray on the lower-left of the server chassis. You can remove the drive tray to easily read the sticker.

Complete Table 23 at the time of the installation or upgrade, using the labels on the servers:

Table 23: Windows product keys for MASs

Server	Windows Server Product key or MSS serial number
MAS#1 Windows product key	
MAS#2 Windows product key	
MAS#3 Windows product key	
MAS#4 Windows product key	
MAS#5 Windows product key	
MAS#6 Windows product key	
MAS#7 Windows product key	
MAS#8 Windows product key	
MAS#9 Windows product key	
MAS#10 Windows product key	
MAS#11 Windows product key	

INADS alarming information

If INADS alarming is to be used at this site, supply the following information to allow the MAS modem to make outgoing calls:

- Communications (COM) port that each modem is to use to make alarm notification calls. This is COM3 for the recommended USB port A on the MAS: _____
- Complete alarm destination telephone number: _____

  Note:

  For a complete list of Avaya support numbers for all regions, see the Global Call Routing Guide at http://toolsa.sd.avaya.com/directories/index.php?mode=crg. For example, in North America, the INADS number is 1-800-535-3573.

- Modem setup (initialization) string required for the modem to make the alarm notification calls. For details, see the documentation included with the modem:

  _____

SNMP alarming information

Supply the following information if SNMP alarming is to be used at this site:

- Network Management Station IP address or fully qualified domain name for the corporate network management system (NMS) that will monitor the Modular Messaging system for alarm notifications (traps):

  _____

- Context (community) to which the NMS belongs. For details, see the SNMP NMS documentation: _____
- Acknowledgement type: choose either **Return Trap** (to have traps actively acknowledged by the NMS) or **Ping Surround** (to have the MAS send a ping to the NMS before and after sending a trap. If the pings succeed, the NMS is assumed to have received the trap):

  _____

  Note:

  If SNMP alarming is used, the customer is responsible for providing and provisioning the SNMP network management system. The customer must configure the SNMP system to receive and optionally acknowledge the traps that the Modular Messaging system generates.

Customer environment

Answer the following questions about the customer environment.

Is this a single Windows domain environment?_____

Which Microsoft Exchange version are you using?_____

Is this a single Microsoft Exchange environment?_____

Appendix B: Installation and upgrade checklists

This appendix contains checklists to help guide you through the various installation and upgrade tasks.

- Before starting a new Modular Messaging installation or upgrade, print the checklist relevant to the procedure that you must do.
- Check off the steps as you complete them to ensure that you do not overlook any important tasks.

Note:

If you are adding a new MAS to an existing Modular Messaging system, complete the software upgrade first, if an upgrade is required. After the upgrade is complete, install the new MAS using the new installation checklist.

Checklists include:

- New Modular Messaging installation on a customer-provided MAS on page 231
- New Modular Messaging installation on an Avaya MAS on page 237
- Modular Messaging upgrade on a Customer-provided server on page 243
- Modular Messaging upgrade on an Avaya MAS on page 247

New Modular Messaging installation on a customer-provided MAS

Use this checklist to install a new Modular Messaging system on a customer-provided MAS. As you complete a task, make a check mark in the " ✔ “column.

Modular Messaging on a customer-provided MAS installation checklist

✔	Description	Page	Comments
Complete preinstallation planning:			
	Complete the planning forms in Appendix A. Requires customer input from LAN, messaging, switch, and system administrators. Also complete any other relevant planning forms for Message Networking or UCC SA.	209	See the appropriate administrators. Planning forms are available from www.avaya.com/support.
1 of 6			

Modular Messaging on a customer-provided MAS installation checklist

✔	Description	Page	Comments
	If Avaya is to maintain this system, pre-register the system in ART. The registration process produces product IDs for the servers and IP addresses for remote access.		You can obtain all required information for each MAS in advance.
	Assemble and review the required documentation.	1	Web access required.
	Download required Avaya software updates. This includes the latest version of the Data Collection Tool.	3	Web access required.
	Obtain the DCT data file for this site, if available.		
	Review security issues.	4	
	Obtain the Exchange System Management Tools 2003 and Service Pack 2 from the customer.		
	Obtain virus-checking software for the MAS if required.	4	Customer obtains.
	Arrange for LAN administration of the MAS system. Register MAS corporate FQDNs on the DNS if required. **Note:** Avaya Inc. is not responsible for the installation, administration, or test of communications between customer PCs and the LAN.	6	See LAN administrator. Time of administration and site requirements vary.
	Verify that the PBX or switch is administered.	6	See switch administrator.
	Arrange for the Active Directory data schema update. Schedule downtime for the directory server, and for the Exchange server if required.	N/A	Review requirements in Chapters 4 and 5.
	Gather the necessary tools and test equipment.	5	
	Collect any software media that is needed for the installation, such as Microsoft Windows updates or anti-virus software.	92	Leave customer CDs and DVDs on-site.
Prepare to install the Modular Messaging software: Note: The customer Active Directory administrator may be required to perform these tasks.			
	Set up the Modular Messaging customer account security group.	58	Do this on the directory server.
2 of 6			

Modular Messaging on a customer-provided MAS installation checklist

✔	Description	Page	Comments
	Set up the required Modular Messaging customer account.	59	Do this on the directory server.
	Setup the technical support account for remote access.	60	Do this on the directory server.
	Set up test subscribers. Set up at least one for each TUI used on the site.	61	Do this on the directory server.
	Assign permissions to the customer account security group.	62	Procedure can vary.
	Add a computer account for each MAS to the Active Directory.	65	Do this on directory server.
	Set up each MAS to support remote access.	66	Do this on directory server.
	Update the Active Directory and data schema if required for Windows 2000 or 2003 with Active Directory.	68	Do this before installing other Modular Messaging software. System restart required.
	Update the Modular Messaging Active Directory Exchange extensions on any machine used to administer subscribers (and on Exchange server if required).	74	Most extension updates require a system restart. You will have to wait to update the extensions on the MAS until the MM software is being installed.
Install any required hardware:			
	Install the Dialogic port boards, including: • Prepare for the installation. • Set jumpers and switches. • Install the Dialogic software and drivers.	45	For details, see the Dialogic documentation. IP H.323 or IP SIP switch integrations skip this step.
	Connect the MAS port boards to the switch or PBX.	53	Do as required.
	Install and configure the modem for each MAS.	54	Do as required.
Set up the MAS for Modular Messaging: Note: The customer domain administrator may be required to perform these tasks.			
	Configure the network card on the MAS if needed.	94	
3 of 6			

Modular Messaging on a customer-provided MAS installation checklist

✔	Description	Page	Comments
	Run MAS disk checks (chkdsk and defragmenter tool).	94	Do as required.
	Join the MAS to the Microsoft Windows domain.	95	
	Adjust system values on the MAS for Modular Messaging. Adjust: • Event Viewer values • File and Printer Sharing properties • Windows 2003 Server operating system values	96	
	Add the Modular Messaging customer and technical support accounts to the local administrators group for this MAS.	97	
	Install Microsoft Windows SP1 if it is not already on the server.	99	Requires Microsoft Windows media.
	Install and enable required Microsoft Windows services.	99	
Install and configure the Modular Messaging software:			
	Verify that the USB storage device with the DCT data file and DCT tool update is inserted in the USB port.	103	
	Copy the DCT file to a directory on the MAS.	102	
	Update the Data Collection Tool.	103	
	Install and launch the Modular Messaging Configuration wizard.	102	
	Select a DCT file, or create one, if necessary.	103	
	Install Exchange 2003 System Management Tools.	107	
	Install Exchange Server 2003 SP2.	107	
	Install MSDE.	107	
	Install Anti-virus software.	107	
	Complete the Modular Messaging software installation.	108	
4 of 6			

Modular Messaging on a customer-provided MAS installation checklist

✔	Description	Page	Comments
	Install updates to Modular Messaging software.	109	
	Set logging location if other than default.	110	
	Administer anti-virus software.	110	
	Configure port boards, if needed.	111	
	Disable unused Microsoft Windows services on this MAS.		Optional.
	Set up remote access on each MAS.	112	
	If multiple languages are installed, specify preferred language.	115	If required.
	Verify that Modular Messaging service is started.	115	
	Use the Voice Mail System Configuration program to: • Configure TUI and access settings. • Configure broadcast mailbox • Configure the PBX type. • Configure serviceability settings	116	Configuration notes required.
	Obtain and install a license for this system.	120	Local procedures vary.
	Configure specific features as needed, including: • Call Me service • MWI service • Languages or TTS • Offline access to messages	122	
	Configure MAS-specific parameters: • INADS alarming, if used • Port boards • Switch integration	125	
	Restart service.	128	
	Verify call handling.	131	
	Verify the alarming setup on the MAS.	131	
	Verify tracing service operation.	132	
Test and back up the system:			
5 of 6			

Modular Messaging on a customer-provided MAS installation checklist

✔	Description	Page	Comments
	Enable a test subscriber for each TUI used at this site.	136	Do this on the directory server. MM Aria is the default.
	Set up monitoring tools — optional, including: • Operational History Viewer • Port Monitor	138	
	Perform acceptance tests, including: • Create and receive test messages in both integrated and nonintegrated mode. • Test TUIs as required. • Test system outcalling using the MM client software. • Test additional features if required for this site.	140	
	Verify creation of external caller objects including: • Validate proxy addresses • Validate mailbox rights	146	
	Install and configure each subsequent MAS.		Repeat steps as needed.
	Remove any test subscribers.	145	Do this on the directory server.
	Back up the data on each MAS.	147	Use local procedures.
	Schedule routine disk maintenance for the MAS.	148	Use local procedures.
	Save the planning forms and DCT file in a safe place.		
	6 of 6		

New Modular Messaging installation on an Avaya MAS

This checklist applies to a new Modular Messaging installation using an Avaya Messaging Application Server (Avaya MAS). As you complete a procedure, make a check mark in the " ✔ " column.

Modular Messaging on an Avaya MAS installation checklist

✔	Description	Page	Comments
Complete preinstallation planning:			
	Complete the planning forms in Appendix A. Requires customer input from LAN, messaging, switch, and system administrators. Also complete any other relevant planning forms for Message Networking or UCC SA.	209	See the appropriate administrators. Planning forms are available from www.avaya.com/support.
	If Avaya is to maintain this system, pre-register the system in ART. The registration process produces product IDs for the servers and IP addresses for remote access.		You can obtain all required information for each MAS in advance.
	Assemble and review the required documentation.	1	Web access required.
	Download required Avaya software updates. This includes the latest version of the Data Collection Tool.	3	Web access required.
	Obtain the DCT data file for this site, if available.		
	Review security issues.	4	
	Obtain the Exchange System Management Tools 2003 and Service Pack 2 from the customer.		
	Obtain virus-checking software for the MAS if required.	4	Customer obtains.
	Arrange for LAN administration of the Avaya MAS system. Register MAS corporate FQDNs on the DNS if required. **Note:** Avaya Inc. is not responsible for the installation, administration, or test of communications between customer PCs and the LAN.	6	See LAN administrator. Time of administration and site requirements vary.
1 of 6			

Modular Messaging on an Avaya MAS installation checklist

✔	Description	Page	Comments
	Verify that the PBX or switch is administered.	6	See switch administrator.
	Arrange for the Active Directory data schema update. Schedule downtime for the directory server and for the Exchange server if required.	N/A	Review requirements in Chapters 4 and 5.
	Gather the necessary tools and test equipment.	5	
	Collect any software media that is needed for the installation, such as Microsoft Windows updates or anti-virus software.	78	Leave customer CDs and DVDs on-site.
Prepare to install the Modular Messaging software: Note: The customer Active Directory administrator may be required to perform these tasks.			
	Set up the Modular Messaging customer account security group.	58	
	Set up the required Modular Messaging customer account.	58	Do this on the directory server.
	Set up the technical support account for remote access.	60	Do this on the directory server.
	Set up test subscribers. Set up at least one for each TUI used on the site.	61	Do this on the directory server.
	Assign permissions to the customer account security group.	62	Procedure can vary.
	Add a computer account for each MAS to the Active Directory.	65	Do this on directory server.
	Set up each MAS to support remote access.	66	
	Update the Active Directory and data schema if required for Windows 2000 or 2003 with Active Directory.	68	Do this before installing other Modular Messaging software. System restart required.
	Update the Modular Messaging Active Directory Exchange extensions on any machine used to administer subscribers (and on Exchange server if required).	74	Most extension updates require a system restart.
2 of 6			

Modular Messaging on an Avaya MAS installation checklist

✔	Description	Page	Comments
Install the hardware:			
	Review preinstallation site requirements, including: • Environmental requirements • Weight and space requirements • Customer-provided cabinet requirements • Installation area requirements • Power and grounding requirements • Demarcation points	10	
	Identify each S3500-family server in the system.		Check and mark the label on each server.
	Unpack the Modular Messaging system hardware and peripheral components.	18	Open boxes as instructed to reuse packing materials.
	Attach mounting brackets and handles to UPS and any EBM units as needed, and then cable the units together.	23	Optional. Do if UPS and any EBMs are present.
	Attach the front bezel to each MAS.	27	
	Attach rails for rack-mount or rubber spacers for stackable configuration to each MAS.	28	Use appropriate method for this site.
	Connect the system power cables.	31	
	Connect the MAS port boards, if present, to the switch (PBX).	33	See Dialogic documentation.
	Connect each MAS to the corporate LAN.	34	
	Install the KVM switch, if used. Steps include: • Attach mounting brackets to KVM switch (if needed). • Connect KVM switch to the monitor, keyboard, and mouse. • Connect the KVM switch to each MAS.	35	Optional. Procedure varies, depending on type of KVM switch purchased.
	Set up the external modem for each MAS.	41	
Set up the Avaya MAS:			
	Switch the monitor to show the correct MAS.	79	
3 of 6			

Modular Messaging on an Avaya MAS installation checklist

✔	Description	Page	Comments
	Verify that the USB storage device with the DCT data file and DCT tool update is inserted in the USB port.	80	
	Start up the system.	80	
Install and configure the Modular Messaging software:			
	Copy the DCT file to the Avaya_Support directory.	81	
	Update the Data Collection Tool.	81	
	Run the Modular Messaging Configuration Wizard when it launches.	81	
	Select a previously-created DCT file, or create a new one.	81	
	Install Windows product key.	81	
	Install Exchange 2003 System Management Tools.	85	
	Install Exchange Server 2003 SP2.	85	
	Install MSDE.	85	
	Install Anti-virus software.	85	
	Complete the Modular Messaging software installation.	86	
	Administer anti-virus software.	87	
	Install Modular Messaging software updates.	88	
	Update Windows software, if needed.	88	
	Disable private LAN.	89	
	Configure port boards, if needed.	89	
	If multiple languages are installed, specify preferred language.	115	If required.
	Verify that Modular Messaging service is started.	115	
4 of 6			

Modular Messaging on an Avaya MAS installation checklist

✔	Description	Page	Comments
	Use the Voice Mail System Configuration program to: • Configure TUI and access settings. • Configure broadcast mailbox • Configure the PBX type. • Configure serviceability settings	116	Configuration notes required.
	Obtain and install a license for this system.	120	Local procedures vary.
	Configure specific features as needed, including: • Call Me service • MWI service • Languages or TTS • Offline access to messages	122	
	Configure MAS-specific parameters: • INADS alarming, if used • Port boards • Switch integration	125	
	Restart service.	128	
	Verify call handling.	131	
	Verify the alarming setup on the MAS.	131	
	Verify tracing service operation.	132	
Test and back up the system:			
	Enable a test subscriber for each TUI used at this site.	136	Do this on the directory server. MM Aria is the default.
	Set up monitoring tools — optional, including: • Operational History Viewer • Port Monitor	138	
5 of 6			

Modular Messaging on an Avaya MAS installation checklist

✔	Description	Page	Comments
	Perform acceptance tests, including: • Create and receive test messages in both integrated and nonintegrated mode. • Test TUIs as required. • Test system outcalling using the MM client software. • Test additional features if required for this site.	140	
	Verify creation of external caller objects including: • Validate proxy addresses • Validate mailbox rights	146	
	Install and configure each subsequent MAS.		Repeat steps as needed.
	Remove any test subscribers.	145	Do this on the directory server.
	Back up the data on each MAS.	147	Use local procedures.
	Schedule routine disk maintenance for the MAS.	148	Use local procedures.
	Save the planning forms and DCT file in a safe place.		
6 of 6			

Modular Messaging upgrade on a Customer-provided server

Use this checklist when you upgrade a system with a customer-provided server that is running Modular Messaging Release 1.1 software to Modular Messaging Release 3. As you complete a procedure, make a check mark in the " ✔ " column.

Note:

If you are adding a new MAS to an existing Modular Messaging system, do the software upgrade first if an upgrade is required. When the upgrade is complete, install the new MAS using the appropriate new installation checklist.

Modular Messaging CPE server upgrade checklist

✔	Description	Page	Comments
Plan for the upgrade:			
	Complete or update the planning forms in Appendix A. Requires customer input from LAN, messaging, switch, and system administrators. Also update any other relevant planning forms for Message Networking or UCC SA.	209	See the appropriate administrators.
	Schedule downtime for the Exchange server if the Exchange extensions must be updated.	72	If required.
	Assemble and review the required documentation.	188	Web access required.
	Download required Avaya software updates. This includes the latest version of the Data Collection Tool.	3	Web access required.
	Collect any software media that is needed for the upgrade, such as Microsoft Windows updates or anti-virus software.	188	Leave customer CDs and DVDs on-site.
	Obtain the Exchange System Management Tools 2003 and Service Pack 2 from the customer.		
	Verify key settings on the MAS, such as switch integration, port board settings, and domain information. • Record non-default port groups and their names • Record RAS IP addresses for each MAS. • Back up Caller Applications files on a non-MAS PC.	191	Use the planning forms.
1 of 4			

Modular Messaging CPE server upgrade checklist

✔	Description	Page	Comments
	Obtain and review the configuration notes for any changes.		Web access required.
Prepare the system for the upgrade:			
	Run the Disk Defragmenter system tool and chkdsk command.	191	
	Unzip the Data Collection Tool (DCT) update file downloaded from the web. Use the DCT to analyze each MAS.	191	DCT file serves as a backup but is not required for the upgrade. All MASs and Exchange message store must be running normally.
	Back up important system files, including any customized tone files, customized prompt files and the DCT file.	147	
Start the upgrade:			
	Busy-out and, if possible, reroute the ports for this MAS.	194	Use PBX procedures.
	Stop and reset all Modular Messaging services.	195	
	Upgrade the Windows operating system, if necessary.	195	
	Install and enable Windows software components, as needed: • Application Server Console • ASP.NET • Enable COM+ access • IIS • Common Files • Internet Information Services Manager • World Wide Web Server • SNMP • NNTP • SMTP	196	
	Change the IIS mode.	198	
	Apply Windows Server 2003 Service Pack 1, if necessary.	198	
2 of 4			

Modular Messaging CPE server upgrade checklist

✔	Description	Page	Comments
	Install Microsoft Exchange 2003 System Management Tools.	198	
	Apply Microsoft Exchange 2003 Service Pack 2.	199	
	Verify that the anti-virus software on the MAS is current.	199	
	Install the MSDE upgrade.	199	
	Update the Dialogic port board drivers. This includes: • Uninstall Dialogic drivers. • Reinstall Dialogic drivers • Upgrade Dialogic drivers from .bat file	200	
	Upgrade Realspeak software. This includes: • Uninstall Realspeak • Reinstall Realspeak engine • Reinstall Realspeak languages	201	
Upgrade and configure the Modular Messaging software:			
	Disable anti-virus software on the MAS for Modular Messaging software installation.		Optional but recommended.
	Run the Modular Messaging Installation Wizard to upgrade existing and install new Modular Messaging software components.	202	
	Complete the Messaging Application Server Configuration Wizard to update the database.	202	
	Install Modular Messaging software updates.	204	
	Enable the virus-checking software on the MAS.		As required.
	Disable unused Microsoft Windows services on this MAS.		Optional.
	Allow the first installed MAS to run for 15 minutes.		For MAS#1 only.
	Upgrade each additional MAS.		Repeat these steps as needed.
	Configure new Release 3 features.	204	
Complete the upgrade:			
	3 of 4		

Modular Messaging CPE server upgrade checklist

✔	Description	Page	Comments
	Update the Modular Messaging Active Directory Exchange extensions on any machine used to administer subscribers (and on Exchange server if required).	74	Most extension updates require a system restart.
	Update client software on all subscriber machines.	206	As required.
	If subscriber options is not being updated to new release, change the security setting.	207	
	Perform acceptance tests, including: • Create and receive test messages in both integrated and nonintegrated mode. • Test each TUI used on this site. • Test system outcalling using the MM client software. • Test additional features if required for this site.	140	
	Verify creation of external caller objects including: • Validate proxy addresses • Validate mailbox rights	146	
	Back up the data on each MAS.	147	Use local procedures.
	Run MAS disk checks (chkdsk and defragmenter tool).		As required.
	Add any new MASs to this system if required.		Use the new system installation checklist.
	Save the planning forms and DCT file in a safe place.		
	4 of 4		

Modular Messaging upgrade on an Avaya MAS

Use this checklist when you upgrade a system with an Avaya MAS that is running Modular Messaging Release 1.1 software to Modular Messaging Release 3. As you complete a procedure, make a check mark in the " ✔ " column.

Note:

If you are adding a new MAS to an existing Modular Messaging system, do the software upgrade first if an upgrade is required. When the upgrade is complete, install the new MAS using the appropriate new installation checklist.

Modular Messaging Avaya MAS upgrade checklist

✔	Description	Page	Comments
Plan for the upgrade:			
	Complete or update the planning forms in Appendix A. Requires customer input from LAN, messaging, switch, and system administrators. Also update any other relevant planning forms for Message Networking or UCC SA.	209	See the appropriate administrators.
	Schedule downtime for the Exchange server if the Exchange extensions must be updated.	72	If required.
	Download required Avaya software updates. This includes the latest Data Collection Tool.	3	Web access required.
	Collect any software media that is needed for the upgrade, such as Microsoft Windows updates or anti-virus software.	152	Leave customer CDs and DVDs on-site.
	Obtain the Exchange System Management Tools 2003 and Service Pack 2 from the customer.		
	Verify key settings on the MAS, such as switch integration, port board settings, and domain information. ● Record RAS IP addresses for each MAS. ● Back up Caller Applications files on a non-MAS PC.	155	Use the planning forms.
	Assemble and review the required documentation.	152	Web access required.
	Obtain and review the configuration notes for any changes.		Web access required.
1 of 5			

Modular Messaging Avaya MAS upgrade checklist

✔	Description	Page	Comments
Prepare the system for the upgrade:			
	Unzip the Data Collection Tool (DCT) update file downloaded from the web. Use the DCT to analyze each MAS.	156	
	Busy-out and, if possible, reroute the ports for this MAS.	161	Use PBX procedures.
	Back up important system files, including any customized tone files, customized prompt files and the DCT file.	147	
	If you have a pre-loaded replacement disk for this upgrade, replace the hard disk drive. If not, proceed to next step.	162	
	If you do not have a pre-loaded replacement disk, install a new Avaya boot image on the existing drive.	171	
	NOTE: If you are upgrading an S3400 server to an S3500 server, complete the hardware upgrade and then install as a new system with a modified DCT file.	182	
Start the upgrade:			
	Install the Windows license.	172	
	Activate the Windows operating system.	172	
	Copy the DCT file to the MAS.	173	
	Update the Data Collection Tool on the MAS.	173	
	Run the Modular Messaging setup utility.	173	
Upgrade and configure the Modular Messaging software:			
	Run the Modular Messaging Configuration Wizard when it launches.	174	
	Access the previously-created DCT file.	174	
	Install Exchange 2003 System Management Tools.	175	
	Install Exchange Server 2003 SP2.	175	
2 of 5			

Modular Messaging Avaya MAS upgrade checklist

✔	Description	Page	Comments
	Install MSDE.	175	
	Install anti-virus software.	175	
	Complete the Modular Messaging Configuration Wizard.	176	
Complete the upgrade:			
	Administer anti-virus software.	178	
	Install Modular Messaging software updates.	179	
	Update Microsoft Windows.	180	
	Disable private LAN.	180	
	Configure port boards, if needed.	180	
	Resynchronize the FEDB.	181	
	Restore customer data.	181	
	Disable unused Microsoft Windows services on this MAS.		Optional.
	If multiple languages are installed, specify preferred language.	115	If required.
	Verify that Modular Messaging service is started.	115	
	Use the Voice Mail System Configuration program to: • Configure TUI and access settings. • Configure broadcast mailbox • Configure the PBX type. • Configure serviceability settings	116	Configuration notes required.
	Obtain and install a license for this system.	120	
	Configure specific features as needed, including: • Call Me service • MWI service • Languages or TTS • Offline access to messages	122	
3 of 5			

Modular Messaging Avaya MAS upgrade checklist

✔	Description	Page	Comments
	Configure MAS-specific parameters: • INADS alarming, if used • Port boards • Switch integration	125	
	Restart service.	128	
	Verify call handling.	131	
	Verify the alarming setup on the MAS.	131	
	Verify tracing service operation.	132	
	Allow 15 minutes for the upgrade information to be shared.		For MAS#1 only.
	Upgrade each additional MAS.	177	Repeat these steps as needed.
	Update the Modular Messaging Active Directory Exchange extensions on any machine used to administer subscribers (and on Exchange server if required).	74	Most extension updates require a system restart.
	Implement additional TUIs, if necessary.	184	
	Update client software on all subscriber machines.	181	As required.
	If subscriber options is not being updated to new release, change the security setting.	185	
	Perform acceptance tests, including: • Create and receive test messages in both integrated and nonintegrated mode. • Test TUIs as required for this site. • Test system outcalling using the MM client software. • Test additional features if required for this site.	140	
	Verify creation of external caller objects including: Validate proxy addresses Validate mailbox rights	146	
	Back up the data on each MAS.	147	Use local procedures.
	Run MAS disk checks (chkdsk and defragmenter tool).		As required.
	4 of 5		

Modular Messaging Avaya MAS upgrade checklist

✔	Description	Page	Comments
	Add any new MASs to this system if required.		Use the new system installation checklist.
	Save the planning forms and DCT file in a safe place.		
	5 of 5		

Appendix C: Creating a new tone file

This appendix describes how to build a tone file for Dialogic analog port boards by using the PBXpert utility to learn PBX tones.

Do this procedure after the port boards are administered on the switch, but before you configure them using the Intel Dialogic product Configuration Manager. For more information, see Configuring analog port boards on page 271.

CAUTION:

Use the configuration notes for this particular PBX or switch integration to administer the port boards. For instructions on obtaining the configuration notes, see Required documentation and software on page 1. The port boards *must* be administered on the switch before you can proceed.

PBXpert learns the call progress tones for this PBX and store them in a Tone Set File (TSF). Many tone sets can be stored in a single TSF file.

You can use the PBXpert utility either automatically or manually:

- *Automatic Learning:* PBXpert uses two different channels on the Dialogic port board to set up tones and learn the resulting call progress tones automatically. To use this procedure, see Learning tones automatically on page 254.
- *Manual Learning:* PBXpert uses one channel on the Dialogic port board and a telephone to set up tones and learn the resulting call progress tones manually. PBXpert prompts you how and when to use the telephone. To use this procedure, see Learning tones manually on page 259.

Note:

If only one line is connected to the Dialogic port board, you must use Manual Learning.

Learning tones automatically

This section describes:

Running the PBXpert wizard

The PBXpert wizard guides you through learning the tones used by this PBX and saving the information as a TSF file. PBXpert can learn the following tones:

- Dial tone
- Ringback
- Busy
- Reorder (fast busy)
- Disconnect

To run the PBXpert wizard:

1. Start the Dialogic port boards:

   a. The Intel Dialogic product Configuration Manager window must be open.

      To open the DCM application, click **Start** > **Programs** > **Intel Dialogic System Release** > **Configuration Manager - DCM**.

   b. Click the green **Start** button on the button bar.

   When service is started, the **Stop** button becomes active and the installed boards show a green light.

2. Click **Start** > **Programs** > **Intel Dialogic System Release** > **PBX Expert**.

   The PBXpert main window opens. Most fields are blank until tones are learned. For an example, see Figure 26.

   - If you are using PBXpert for the first time after installation, the PBXpert wizard starts automatically.
   - If the PBXpert wizard does not start automatically, click **Tones** > **Tone Wizard**.

Note:

You can change the default settings in the wizard if you are familiar with this PBX environment and the Dialogic API. The program saves any settings that you change when you exit PBXpert. For help on a particular screen, click the **Help** button in the wizard.

Figure 26: PBXpert main window

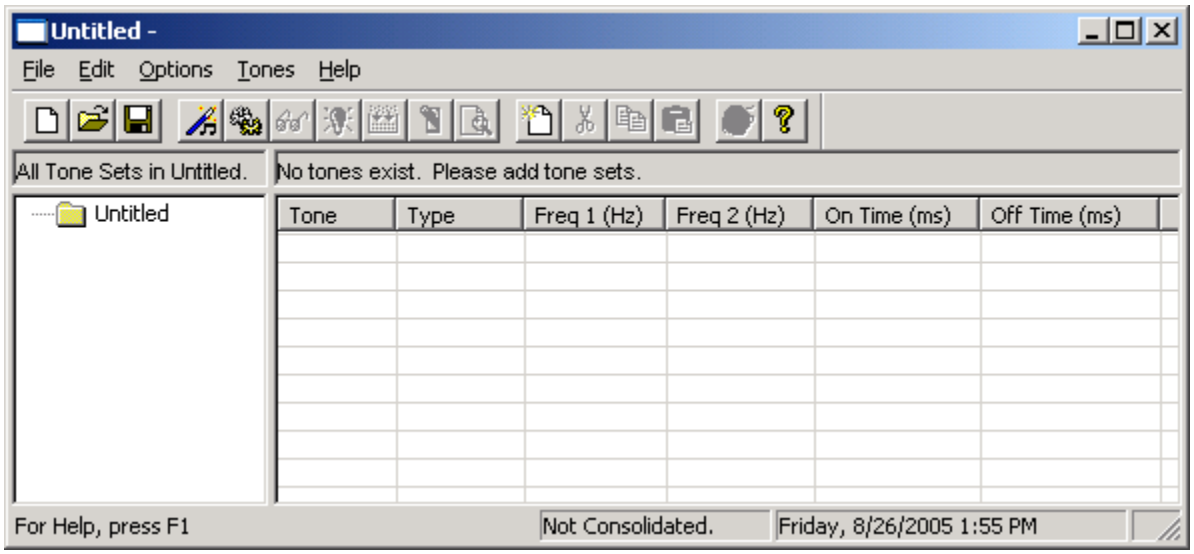

After the PBXpert Wizard window opens, complete the screens as follows:

1. On the Welcome screen, click **Next**.
2. On the PBX Information screen:
   - Under **PBX**, enter the name of the **Manufacturer**, such as *Mitel*.
   - Enter the **Model** of the PBX, such as *SX-2000*.
   - You can use the automatically created **Tone Set File** name shown on the screen, or alter the file name as desired.
   - Click **Next**.
3. On the Select a Board screen:
   - Select the port board to use.
   - Click **Next**.
4. On the Select the Calling Resource screen, for the Line A (Calling Channel):
   - For **Select the Channel**, enter the port number or channel to use.

- For **Phone Number**, enter the extension number of this port. For port board extensions, see Switch and messaging information on page 225.
- Click **Next**.

5. On the Select the Called Resource screen, for the Line B (Called Channel):
   - For **Select the Channel**, enter a port number or channel that is different from Line A.
   - For **Phone Number**, enter the extension number of this port.
   - Click **Next**.
6. On the Settings Confirmation screen:
   - Verify the settings. Click **Back** if you need to change anything.
   - Verify that the **Run Wizard Auto-Test** box is checked.
   - Click **Next**.
7. The Auto Line Test window opens while PBXpert verifies the connection between the two specified channels.
   - If you see a **Test finished successfully!** message, click **OK**. Close this window and proceed.
   - If the line test fails:
     a. Click **OK**. Close this window.
     b. Click **Back** on the wizard, adjust the settings, and try the test again.
8. On the Learning Tones screen, click **Next** to start learning tones automatically.

   The Learn Tones window opens. For an example, see Figure 27.

   Note:

   You can click **Cancel** at any time during the test to stop automated learning.

Figure 27: Learn Tones window—learning in progress

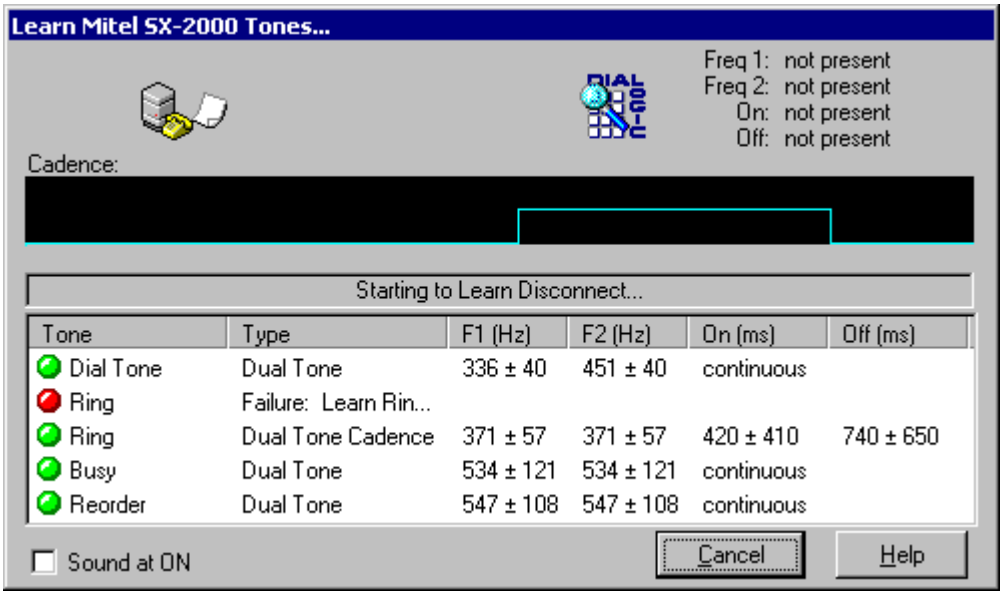

9. When PBXpert completes learning, choose to keep or discard the data.
   - If the tones were learned without errors, select **Keep Data**. The Learn Tones window closes and you can proceed.
   - If errors occurred, select **Discard Data**. The window closes.
     - Click **Back** on the wizard, adjust the settings, and try to learn the tones again.
     - You cannot test or save the tone file if it contains errors.
10. On the Verifying the Learn screen, click **Next** to test the learned tones.
    - If the test succeeds, click **OK** to close the test window and proceed.
    - If the test fails, click **OK** to close this window. Click **Back** on the wizard, adjust the settings, and try the test again.
11. The Summary of Results screen shows the final wizard status and tone definitions. Click **Finish**.

    The PBXpert main window displays the tone definitions.

Consolidating and saving the TSF file

You must consolidate and save the new TSF file so you can use it with the Dialogic voice driver. To do this:

1. Click **Tones** > **Consolidate**.
2. After consolidation is complete, click **File** > **Save** to save the new TSF file.
   a. In the Save As window, navigate to the following directory to ensure that the file is backed up: **C:\Avaya_Support\Tone_Files**

   Note:

   If you use the default DATA directory, the system will *not* back up the customized tone file automatically.

   b. Specify a file name with file type of TSF, such as *Mitel-SX-2000.tsf*.

Using the new TSF in Dialogic Configuration Manager

To use the new TSF that you just created:

1. Return to the Intel Dialogic product Configuration Manager window.
2. Click the red **Stop** button on the button bar.
3. Return to Step 4 in Configuring analog port boards on page 271 and complete board configuration and testing.

Learning tones manually

This section describes:

Running PBXpert

To run PBXpert manually:

1. Start the Dialogic port boards.
   a. The Intel Dialogic product Configuration Manager window must be open.

      To open the DCM application, click **Start** > **Programs** > **Intel Dialogic System Release** > **Configuration Manager - DCM**.

   b. Click the green **Start** button on the button bar.

   When service is started, the **Stop** button becomes active and the installed boards show a green light.
2. Click **Start** > **Programs** > **Intel Dialogic System Release** > **PBX Expert**.

   The PBXpert main window opens. Most fields are blank until tones are learned. For an example, see Figure 26: PBXpert main window on page 255.
3. If you are using PBXpert for the first time after installation, the PBXpert wizard starts automatically. If the PBXpert Wizard starts, click the **Don't run wizard at startup** checkbox and click the **Cancel** button.

   A new, empty TSF is now active.
4. In the PBXpert main window, click **Settings** on the button bar.
5. In the Settings window, on the **Dialing** tab:
   a. Under **Line A**, enter the **Board Number**, such as *1*.
   b. Enter the **Channel Number** or **Port number**.
   c. Verify that the **Manual mode** checkbox is checked.

d. For **Phone Number**, enter the extension for this port or channel. For port board extensions, see Switch and messaging information on page 225.

You can use the default values for all the other fields in this window. Click **Help** for more information if needed.

e. Repeat Steps a through d for **Line B**.

Note:

If you are familiar with this PBX environment and the Dialogic API, you can change these default settings. The program saves any settings that you change when you exit PBXpert.

f. Click **OK**.

Adding a new tone set

To add a new tone set to a TSF:

1. From the PBXpert main window, click **Edit** > **New Tone Set**.
2. In the New Toneset window:
   a. Enter the PBX **Manufacturer**, such as *Mitel*, and the **Model** name, such as *SX-2000*.
   b. Click **OK**.

   The PBXpert main window shows the manufacturer and model names you entered. The tone definitions are set to zero.

Learning tone definitions

To add tone definitions to the new tone set:

1. From the PBXpert main window, click **Tones** > **Learn**.
2. On the Start Learn window:
   a. Select the tones for the Dialogic boards to learn. The default is all tones.
   b. Click **Start Learn** to have PBXpert start learning tones.

   The Learn Tones window opens. For an example, see Figure 28.

   Note:

   Click **Cancel** at any time to stop learning.

Figure 28: Learn Tones window—learning complete

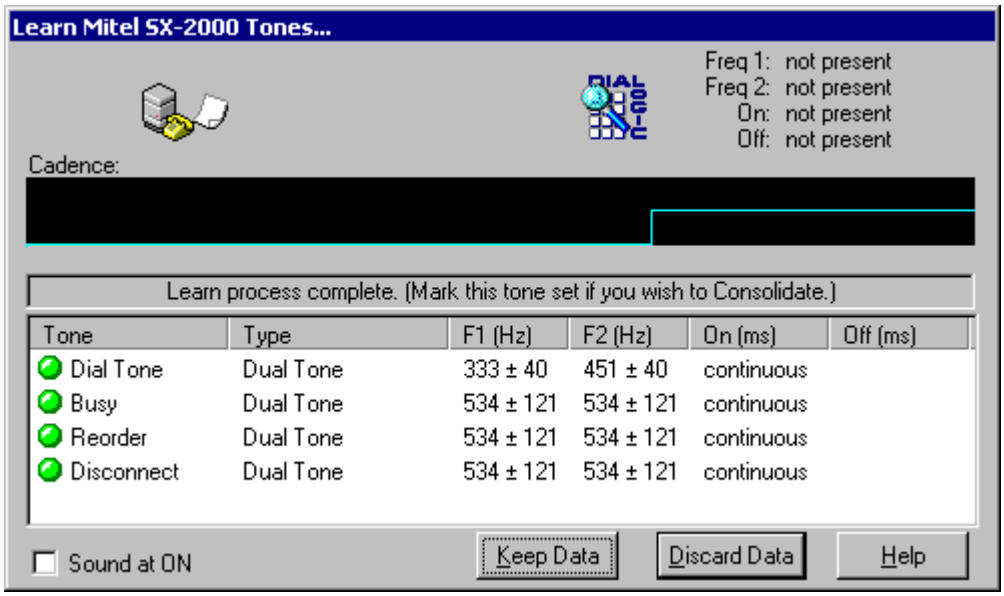

3. The system prompts you to listen for ringing, and to pick up or replace the telephone handset, during the test. When a message box pops up, do the requested action, and then click **OK**.
4. When the learning process is complete, the system displays the tone definitions in the Learn Tones window. Choose to keep or discard the data:
   - If the tones were learned without errors, select **Keep Data**. The Learn Tones window closes and you can proceed.
   - If errors occurred, select **Discard Data**. The window closes.
     - Click **Back** on the wizard, adjust the settings, and try to learn the tones again.
     - You cannot test or save the tone file if it contains errors.

   The Learn Tone window closes. The PBXpert main window displays the new tone definitions.

Testing the tone set

The Test function verifies that the consolidated tone set in the active TSF works correctly with Perfect Call, a call progress analysis utility.

To test the newly learned tones:

1. In the main PBXpert window, click **Tones** > **Test**.
2. A Test window opens.

   When testing is complete, the Test window displays the test results.
3. Verify that the tone definitions of the learned tones are correct.

Consolidating and saving the TSF file

You must consolidate and save the new TSF file so you can use it with the Dialogic voice driver. To do this:

1. Click **Tones** > **Consolidate**.
2. Click **File** > **Save** to save the new TSF file.
   a. In the Save As window, navigate to the following directory to ensure that the file is backed up: **C:\Avaya_Support\Tone_Files**

   Note:

   If you use the default DATA directory, the system will *not* back up the customized tone file automatically.

   b. Specify a file name with file type of TSF, such as *Mitel-SX-2000.tsf*.

Using the new TSF in Dialogic Configuration Manager

To use the new TSF that you just created:

1. Return to the Intel Dialogic product Configuration Manager window.
2. Click the red **Stop** button on the button bar.
3. Return to Step 4 in Configuring analog port boards on page 271 and complete board configuration and testing.

Appendix D: Configuring and testing port boards

Overview

This appendix describes how to configure and test Dialogic port boards. Dialogic port boards are installed in some MASs, depending on the switch integration.

Note:

An MAS that uses an IP H.323 or IP SIP switch integration has no port boards. You do all configuration for these switch integrations using the Voice Mail System Configuration (VMSC) program. For more information, see Configuring port boards and switch integration on page 126.

When to configure port boards

In Release 3, you must configure Dialogic port boards only if:

- Dialogic port boards are installed in this MAS *and*
- The Avaya Modular Messaging Configuration Wizard does not automatically configure the Dialogic port boards.

The Avaya Modular Messaging Configuration Wizard automatically configures any installed Dialogic port boards for several switch integrations, including:

- Avaya CM (IP SIP)
- Avaya (IP H323)
- Avaya (QSIG)
- Cisco (QSIG)
- Nortel NT M-1 (QSIG)
- Siemens Hipath (QSIG)

To verify if a particular switch integration supports automatic configuration of the Dialogic port boards, open the Avaya Modular Messaging Data Collection Tool (DCT).

1. On the MAS, navigate to the directory
   C:\Program Files\Avaya Modular Messaging\Install\MISCM
2. Double-click the file **MMDCT.exe** to open the Avaya Modular Messaging Data Collection Tool window.
3. Click the **Switch integration** screen to see the list of supported switch integrations.
4. Cancel out of the DCT program, and close all open windows.

Supported port boards

The number and type of supported port boards varies, depending on the hardware used and the release during which the port boards were installed.

- Systems with Avaya MASs that were upgraded from an earlier release might use either customer-provided or S3400-family server hardware. Upgraded MASs can have a varying number of port boards installed. The number of port boards depends on the original software release when the boards were installed, and the number of TUIs in use. Table 24 lists supported Dialogic port boards for CPE and S3400-family message servers.

Table 24: Supported MAS port boards—S3400-family and CPE server upgrades

Protocol	Ports per MAS	Supported port boards	Maximum number	Dialogic files on documentation media
Analog	12 - 48 (Aria) 12 - 24 (other) [1] 4 - 16 or 4 - 20 (any TUI) [2]	Dialogic D/120JCT-LS 12-port board Dialogic D/41JCT-LS 4-port board	4 or 2 4 or 5 [2]	**D/120JCT-LS** (PDF) **D/41JCT-LS** (PDF)
Digital Set Emulation	8 - 32 (Aria) 8 - 24 (other) [1] 8 - 32 or 8 - 40 (Aria) [2]	Dialogic D/82JCT-U-PCI-UNIV *or* Dialogic D/82JCT-U	4 or 3 4 or 5 [2]	**D/82JCT-U PCI Univ** (PDF) **D/82JCT-U** (PDF) *Supported for upgrades only. CPE servers support up to 6.* [3]
E1-QSIG	30 (any TUI) [4]	Dialogic D/600JCT-1E1 [5] Dialogic D/300JCT-E1	1	**D/600JCT-1E1** (PDF) **D/300JCT-E1** (PDF) *Supported for CPE upgrades only.*
T1-QSIG	46 (Aria) 23 (other) [4]	Dialogic D/480JCT-1T1 [5] Dialogic D/240JCT-T1	2 or 1	**D/480JCT-1T1** (PDF) **D/240JCT-T1** (PDF) *Supported for CPE upgrades only.*

1. The number of ports supported per MAS varies depending on the telephone user interface (TUI). Systems that use only the MM Aria TUI support more ports. Systems that use the MM AUDIX TUI, MM Serenade TUI, or any combination of TUIs support fewer ports per MAS.
2. The maximum number of 4-port analog boards and DSE boards varies. All Release 2 or later systems support up to four (4) port boards per MAS, if S3400-family hardware is used. For Release 1 upgrades only, each MAS can have up to five (5) port boards, if five boards were installed before the upgrade.
3. A CPE server can support up to six (6) DSE boards for 48 ports, if the server has sufficient PCI slots.
4. The S3500-family server supports two (2) QSIG port boards per MAS. If the server you are upgrading has S3400-family server specifications, you must upgrade from the S3400-family server or equivalent CPE server to an S3500-family server or equivalent CPE server to get greater QSIG port capacity.
5. Early D/600JCT-1E1 and D/480JCT-1T1 QSIG port boards have a plug in the unused connector on the faceplate. Dialogic D/600JCT-1E1 or D/480JCT-1T1 QSIG port boards that ship after mid-2005 have only a single connector. Both types of QSIG boards operate identically.

- New Release 3 systems can use the following hardware:
  - New Avaya-provided MASs always use S3500-family server hardware. All S3500-family MASs support a maximum of two port boards each. For more information, see Table 7: Supported MAS port boards—S3500-family servers on page 20.
  - New Release 3 systems that use a customer-provided server might support a larger number of port boards per MAS. The number depends on the board type and the number of PCI slots available in the CPE server. For more information about CPE servers, see Table 8: Supported MAS port boards for customer-provided servers on page 44.

The Dialogic documents provide details about installing and connecting the port boards. The documents are available on the *Avaya Modular Messaging Documentation* media or from the Avaya Support Web site at http://www.avaya.com/support. For instructions on obtaining Avaya documents, see Required documentation and software on page 1. For the latest version of the Dialogic guides, see the Quick Install Cards Search Tool on the Intel Telecom Boards Web site.

Note:

Avaya does not support Brooktrout port boards for Modular Messaging systems that run Release 3 software. All servers must use Dialogic port boards.

Configuring port boards

Manual port board configuration involves three phases:

1. The appropriate party must administer the switch for the port boards using the configuration notes for this particular switch (PBX) integration. For instructions on obtaining the most recent configuration notes, see Obtaining information on the Web on page 1.

   CAUTION:

   You can only install this system by using the required configuration notes for this switch or PBX. The PBX administrator *must* have administered the ports on the switch before you can proceed.

2. Configure and test the port boards as described in this section. Some steps require you to use the configuration notes.
3. You must complete the port board configuration as described in Chapter 8: Configuring the voice mail system on page 113.

Continue based on the type of port boards installed in this MAS:

- Configuring T1-QSIG or E1-QSIG boards on page 266
- Configuring set emulation boards on page 269
- Configuring analog port boards on page 271

CAUTION:

If the window displays no port boards when you run the Dialogic Configuration Manager, you might need to reseat or replace some of the boards. For more information, see the appropriate maintenance information for this Modular Messaging system on the documentation media:

- For S3500-family servers, see *Avaya Modular Messaging S3500-Family Hardware Maintenance and Additions* (PDF)
- For S3400-family servers, see "Circuit card replacement" in the **Maintenance** section on the *Avaya Modular Messaging Documentation* media

Configuring T1-QSIG or E1-QSIG boards

Either of the following QSIG port boards might be installed in an MAS:

- Dialogic D/480JCT-1T1 board
- Dialogic D/600JCT-1E1 board

Note:

Avaya supports the D/240JCT-T1 and D/300JCT-E1 QSIG boards *only* for CPE upgrades from Release 1. Avaya-provided servers do *not* support these boards

The maximum number of port boards per MAS varies, depending on the server hardware. For more information, see Supported port boards on page 264.

To configure QSIG boards:

1. Click **Start > Programs > Intel Dialogic System Release > Configuration Manager - DCM**.

   The Intel Dialogic product Configuration Manager window opens.

2. If a popup window opens, connect to the MAS as follows:

   a. In the Computer Name window, verify that **Local** is selected and that the correct server name is shown, such as *MYMAS1*.

   b. Click **Connect**.

   Note:

   The system displays this window only the first time that you access the Dialogic Configuration Manager application.

   The Dialogic software locates any installed port boards.

3. Verify that all Dialogic services are stopped. All boards should show a red icon.

   Note:

   If the board icon shows an X, the board is disabled. To enable it, right-click the board and select **Enable device(s)**.

4. Under Configured Devices, double-click the name of the first Dialogic board, such as *#0*.
5. In the Intel Dialogic product Configuration Manager - Properties window:
   a. Click the **Interface** tab and select the **ISDNProtocol** parameter.
   b. Select the correct value for this board from the pull-down list:
      - For E1-QSIG: select **QTE**
      - For T1-QSIG: select **QTU**
   c. Click the **Telephony Bus** tab and select the **PCMEncoding** parameter.
   d. Select the correct value for the installed board from the pull-down list:
      - For E1-QSIG: select **A-Law** for most countries, particularly Europe
      - For T1-QSIG: select **μ-Law** (mu-Law) for the United States and Japan
   e. Click the **Misc** tab. For the **FirmwareFile** parameter, verify that the value is **default**.
   f. Click the **Country** tab and select the **Country** parameter.
   g. On the pull-down list of values, always use **United States** for either type of board.
   h. Click **OK** to close the properties window.
6. Repeat Steps 4 and 5 for any other installed Dialogic boards, such as *#1*.

7. After all boards are configured, click the green **Start** button on the button bar.

   Wait for service to start. When service is started, the **Stop** button becomes active and the installed boards show a green light. For an example, see Figure 29.

Figure 29: Sample Dialogic Configuration Manager window—QSIG boards

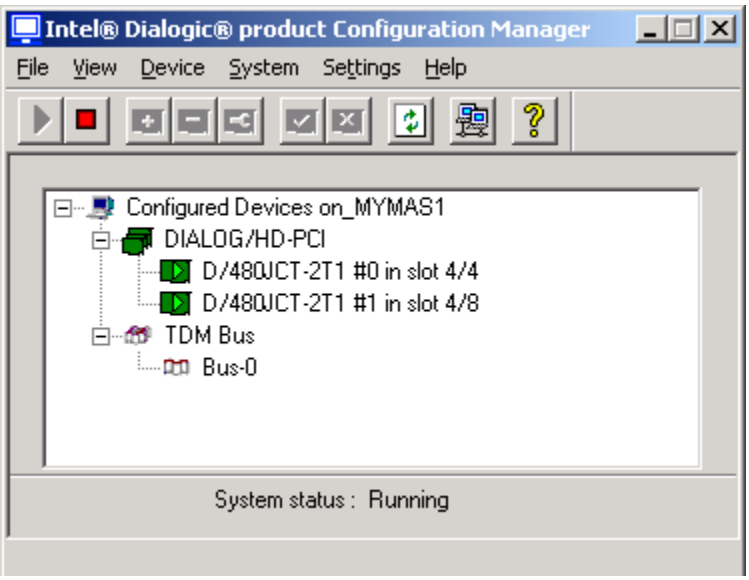

8. Verify that the port boards are operating correctly.
   a. Check the LED display on the Dialogic board faceplate.
      - A red status LED lights on the back of the port board during driver startup.
      - If the drivers start successfully, the board whose port is connected to the PBX shows a green LED within 30 seconds. LEDs on the other boards remain red.
   b. If a problem occurs, check the board configuration, the physical connections between the board and the PBX, or the PBX configuration. Repeat Steps 4 through 8 as needed.
9. Close the Intel Dialogic product Configuration Manager window.
10. Continue with Testing the port boards on page 274.

Configuring set emulation boards

An MAS supports 8-port Dialogic Digital Set Emulation (DSE) boards. The maximum number of port boards per MAS varies, depending on the server hardware. For more information, see Supported port boards on page 264.

Note:

Avaya supports the non-universal D/82JCT-U board for upgrades only.

To configure digital set emulation boards:

1. Click **Start** > **Programs** > **Intel Dialogic System Release** > **Configuration Manager - DCM**.

   The Intel Dialogic product Configuration Manager window opens.

2. If a popup window opens, connect to the MAS as follows:

   a. In the Computer Name window, verify that **Local** is selected and that the correct server name is shown, such as *MYMAS1*.

   b. Click **Connect**.

   Note:

   The system displays this window only the first time that you access the Dialogic Configuration Manager application.

   The Dialogic software locates any installed port boards.

3. Verify that all Dialogic services are stopped. All boards should show a red icon.

   Note:

   If the board icon shows an X, the board is disabled. To enable it, right-click the board and select **Enable device(s)**.

4. Under Configured Devices, double-click the name of the first Dialogic board, such as *#0*.

5. In the Intel Dialogic product Configuration Manager - Properties window:

   a. Click the **Telephony Bus** tab and select the **PCMEncoding** parameter. On the pull-down list of values, select either **A-Law** or **μ-Law**, depending on your location. Usually, **A-Law** is Europe and **μ-Law** (mu-Law) is United States and Japan.

   b. Click the **Misc** tab and select the **PBXSwitch** parameter. On the pull-down list of values, select the name of the PBX. For example, use *Lucent 2-wire* for an Avaya G3 switch.

   c. Click the **Country** tab and select the **Country** parameter. On the pull-down list of values, select the country.

   d. Click **OK** to close the Intel Dialogic product Configuration Manager Properties window.

6. Repeat Steps 4 and 5 for any other installed Dialogic boards, such as *#1*.

CAUTION:

If the DSE boards are connected to a Nortel (NTM-1) PBX, you must reboot the MAS before you start the Dialogic drivers. Close the DCM and reboot the system now. When the reboot is complete, log back in and reopen the DCM as in Step 1, and then continue with Step 7.

7. After all boards are configured, click the green **Start** button on the button bar.

   Wait for service to start. When service is started, the **Stop** button becomes active and the installed boards show a green light. For an example, see Figure 30.

Figure 30: Sample Dialogic Configuration Manager window—DSE boards

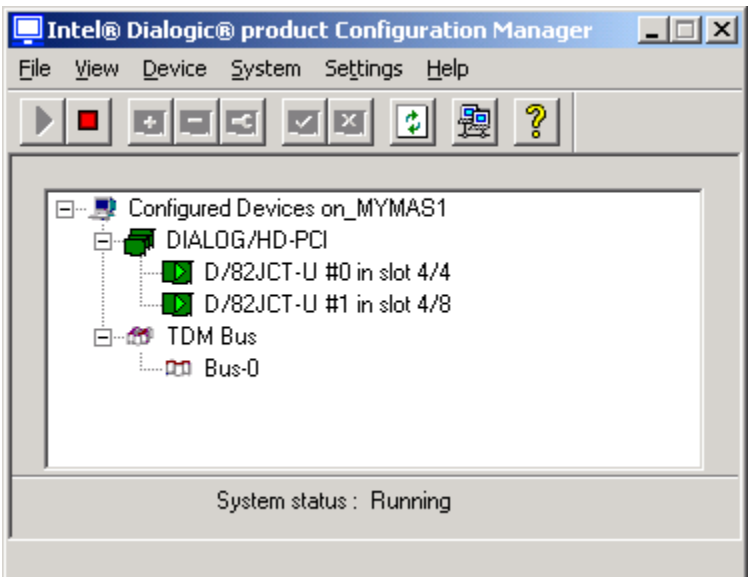

8. Verify that the port boards are operating correctly.
   a. Check the LED display on the Dialogic board faceplate. Verify the code for each port:
      - Ports that are connected to a telephone line and functioning correctly show 0 and the port number, such as *00* or *01*.
      - Ports that are not connected to a telephone line or not functioning correctly show *En*, where *n* is the port number. For example, the display reads *E3* if port 3 has an error.
   b. If any *En* error codes are present, check the board configuration, the physical connections between the board and the PBX, or the PBX configuration. For example, verify that you configured the correct PBX. Repeat Steps 4 through 8 as needed.
9. Close the Intel Dialogic product Configuration Manager window.
10. Continue with Testing the port boards on page 274.

Configuring analog port boards

The following analog port boards might be installed in an MAS:

- Dialogic D/41JCT-LS 4-port Tip/Ring board
- Dialogic D/120JCT-LS 12-port Tip/Ring board

The maximum number of port boards per MAS varies, depending on the server hardware. For more information, see Supported port boards on page 264.

To configure either of these analog boards:

1. Click **Start** > **Programs** > **Intel Dialogic System Release** > **Configuration Manager - DCM**.

   The Intel Dialogic product Configuration Manager window opens.

2. If a popup window opens, connect to the MAS as follows:

   a. In the Computer Name window, verify that **Local** is selected and that the correct server name is shown, such as *MYMAS1*.

   b. Click **Connect**.

   Note:

   The system displays this window only the first time that you access the Dialogic Configuration Manager application.

   The Dialogic software locates any installed port boards.

3. Verify that all Dialogic services are stopped. All boards should show a red icon.

   Note:

   If the board icon shows an X, the board is disabled. To enable it, right-click the board and select **Enable device(s)**.

4. Under Configured Devices, double-click the name of the first Dialogic board, such as *#0*.

   CAUTION:

   If you cannot find a suitable TSF file for this PBX, you must build an appropriate tone file now or the integration will not work. Click **Cancel** in this window, and see Appendix C: Creating a new tone file on page 253.

5. In the Intel Dialogic product Configuration Manager - Properties window:

   a. Click the **Files** tab.

   b. Select the **TSFFileName** parameter, if it is not already selected.

   Note:

   For a D/41JCT-LS board, you must highlight the **Configured Devices** parameter on the DCM display when you select **Configure Device**. You can then view the **TSFFileName** parameter.

c. Locate the prerecorded TSF file for this PBX or switch:

1. Click the **...** button to browse. In the **Look in** field, navigate to the C:\Avaya_Support\Tone_Files directory.
2. In the Search File window, select a TSF file that is appropriate for the PBX to which you are connecting, such as *Avaya-G3-US.tsf*. Double-click the file name.

The system displays the appropriate TSF file in the **Value** field.

Note:

You can type in the **Value** field. This field is editable.

6. After an appropriate TSF file is selected, click the **Misc** tab.

a. Click the **TSFFileSupport** parameter.

CAUTION:

You must have selected an appropriate TSF file for this PBX *before* you set the TSFFileSupport value to **Yes**, or errors might occur.

b. From the **Value** drop-down list, select **Yes**.

c. Click the **DisconnectTone** parameter. From the **Value** drop-down list, select **Yes**.

d. Click OK to close the properties window.

7. Repeat Steps 4 through 6 for any other installed Dialogic boards, such as *#1*. Verify that the settings are correct, and set any values if needed.
8. After all boards are configured, click the green **Start** button on the button bar.

   Wait for service to start. When service is started, the **Stop** button becomes active and the installed boards show a green light. For an example, see Figure 31: Sample Dialogic Configuration Manager window—Analog boards on page 273.
9. Close the Intel Dialogic product Configuration Manager window.
10. Continue with Testing the port boards on page 274.

Figure 31: Sample Dialogic Configuration Manager window—Analog boards

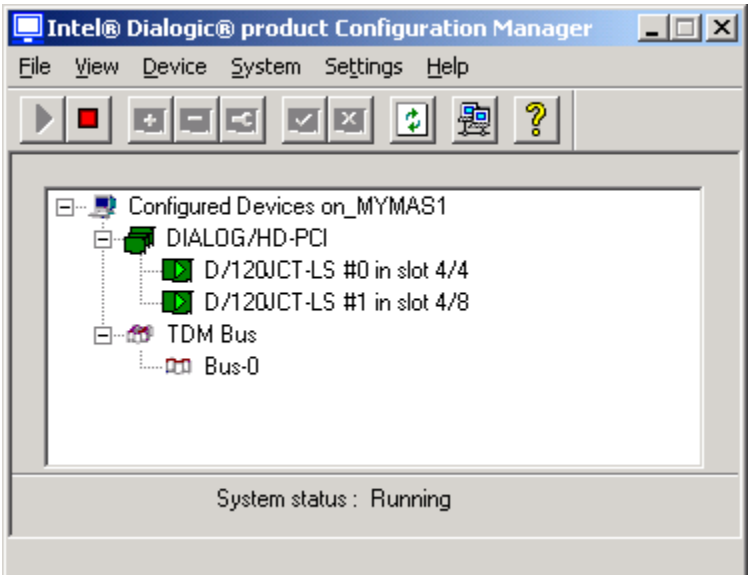

Testing the port boards

Test all port boards and channels to verify that they can send and receive calls.

Note:

Sometimes after you apply settings to a port board, the board comes up in a bad state. The Dialogic drivers consistently fail to start, and the Event Viewer shows **dlgc_log** errors. If this problem occurs, take the power off the boards. Turn off the server, and then turn on the server again. The power cycle corrects the port board problems.

Preparing for the test

Prepare for port board testing as follows:

1. Stop Modular Messaging voice service:
   a. Access the window to monitor services using one of these methods:
      - Double-click the **Monitor** icon on the desktop, if present. In the left pane, click **Services**, if the item is not already selected.
      - Right-click **My Computer** and select **Manage**. In the Computer Management window, in the left (Tree) pane, expand **Services and Applications,** and then click **Services**.

   b. In the right pane, scroll down to **MM Messaging Application Server**.
   c. Right-click **MM Messaging Application Server** and select **Stop**.
2. *For software-only upgrades,* the Dialogic Line Tester program is not yet installed. Access the test program on the application media as follows:
   a. Insert Disk 1 of the *Avaya Modular Messaging Messaging Application Server Software* media into the MAS drive.
   b. Close the drive door and wait for the green LED to go out. Click **OK**.
   c. In Windows Explorer, navigate to the MAS drive, such as D:.
   d. Navigate to the **Install** directory, and then to the **DLTest** subdirectory.
   e. Double-click the file **DLTest.exe**.

   The Dialogic Line Test Application window opens.
3. *For T1-QSIG or E1-QSIG boards,* set up the test options as follows:
   a. Click **Start** > **Programs** > **Avaya Modular Messaging** > **Dialogic Line Tester**.
   b. In the Dialogic Line Test Application window, click **Tools** > **Options**.

c. In the Options window, select the correct values for each field. Use the configuration notes to identify the correct values:

- For **Layer 1 Protocol**, select the required ISDN protocol from the drop-down list.
- For **Number Type**, select the destination number type.
- For **Number Plan**, select the destination number plan.

Note:

The values you select here must be the same as those entered on the PBX or switch. Check the configuration notes.

d. After you select the correct values, click **OK**.

Testing the ports

To test Dialogic port board functionality:

1. Access the Dialogic Line Test application using one of these methods:

   - Click **Start** > **Programs** > **Avaya Modular Messaging** > **Dialogic Line Tester**.
   - *For software-only upgrades,* access the Dialogic Line Tester program from the applications media. For this procedure, see Step 2 in Preparing for the test on page 274.

   The Dialogic QSIG - Line Test Application (or DLTest) window opens. The name of the window varies, depending on the type of port boards installed.

2. Verify that all port numbers and channel designations are listed. For an example, see Figure 32.

Figure 32: Sample Dialogic QSIG - Line Test Application window

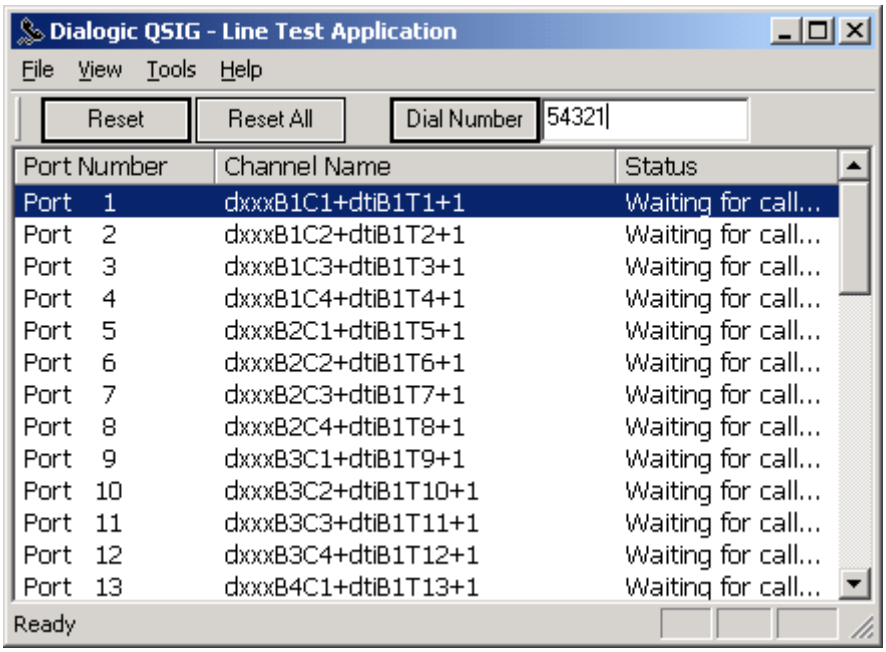

3. Test the incoming call connectivity of all ports as follows:
   a. From a handset on the same PBX, dial each port individually.
      - For QSIG boards, repeatedly dial the number for that group of ports. The switch connects to the next port in the list for each new call.
      - For analog and set emulation boards, use the individual port extensions from Switch and messaging information on page 225.
   b. Check the **Status** column.
      - Verify that each port shows **Received call** followed by **Connected**.
      - For different status conditions, see Table 25: Status messages for Dialogic Line Test on page 277.

   The system should answer each connected call with a standard welcome message.

Table 25: Status messages for Dialogic Line Test

Status	Description	Highlight
Channel starting…	The channel is being started.	Normal
Channels idle…	The channel is idle.	Normal
Waiting for call…	The channel is waiting for an incoming call.	Normal
Received call…	An incoming call is being processed.	Normal
Dialling number…	A number is being dialed to make an outgoing call.	Normal
Resetting…	The user reset the channel.	Normal
Line Busy.	An outgoing call was made, but a busy tone was detected.	Normal
No Answer.	An outgoing call was made, but the call was not answered.	Normal
Connected.	An incoming or outgoing call was answered, so the call is now connected.	Normal
Call was disconnected.	An incoming or outgoing call was disconnected.	Normal
Error.	A general error with the channel occurred.	Error
Error, No Dial tone detected.	An outgoing call was made, but no dial tone was detected before dialing.	Error

4. Test the outcalling capability of all ports. For a sample configuration, see Figure 32: Sample Dialogic QSIG - Line Test Application window on page 276:
   a. Select a port in the Dialogic Line Test Application window under **Port Number**.
   b. Type the number of an extension on this PBX in the **Dial Number** field.
   c. Click **Dial Number**.
   d. When the dialed extension rings, answer the call and hang up.
   e. Select the next port number, and click **Dial Number** again.
   f. Repeat Steps d and e until all ports are tested.
5. After testing is complete, close the Dialogic Line Test Application window.
6. If a problem occurs, check:
   - the board configuration
   - the physical connections between the board and the PBX
   - the PBX configuration itself

For example, verify that you have configured the correct PBX type and administered the values according to the current configuration notes.

7. After port board testing is complete, continue as appropriate:
   - For a customer-provided MAS, continue with Setting up remote access on page 112.
   - For an Avaya MAS, continue with Chapter 8: Configuring the voice mail system on page 113.

Appendix E: Updating Modular Messaging software

You must update the Avaya Modular Messaging software after an installation or upgrade to bring it up to date with the latest changes. Software updates might include the latest Avaya Service Pack (SP) or Avaya software patches (hotfixes).

Topics in this appendix include:

Considerations for applying updates include:

- You can apply multiple hotfixes to a system.
- Modular Messaging components can have multiple updates applied to them.
- If you apply a Service Pack, the program automatically uninstalls all previously applied hotfixes, patches, and Service Packs.

Obtaining software updates from the Web

Obtain the latest Avaya software updates from the Web.

To obtain any Avaya software updates for this system:

1. Use a computer that can access the Internet.
2. Go to the Avaya Support Web site at http://www.avaya.com/support.
   a. Click the link to **Find documentation and downloads by product name**.
   b. Under **M**, click **Modular Messaging**.
   c. On the Modular Messaging page, select Release **3.0** from the drop-down list.
3. Click **Downloads**.
   a. Download any files needed to update the Modular Messaging system.

   Note:

   Ensure that you download both the software files and any instructions required to install the Service Pack or software patch.

   b. Copy the downloaded files to a USB storage device.
   c. The files are often bundled in a compressed archive, such as a zip file. Use the appropriate tools on your computer to extract the files into an appropriate directory.

Installing software updates on each MAS

To start the update procedure, you must copy the Avaya software updates to each MAS. You then run an installation wizard to install the updates.

Copying files to the MAS

To copy the Avaya software updates to an MAS:

1. Switch the monitor to show the appropriate MAS.
2. Insert the USB drive into any USB port on the server.
   - You can use any of the available USB ports on the back of the server.
   - You must remove the front bezel to access the USB port on the front of an Avaya S3500-family message server.
3. Copy the software update files to the MAS:
   a. Open Windows Explorer.
   b. Navigate to the appropriate directory on the USB storage device, **Removable Disk (E:)**.
   c. Right-click the software update file that you downloaded in Obtaining software updates from the Web on page 279. For example, file *MAS300100.exe*. Select **Copy**.
   d. Navigate to the C:\Avaya_Support directory.
   e. Right-click in a blank area in the right pane, and select **Paste**.
   f. Verify that the correct file is listed in the C:\Avaya_Support directory.
   g. If you downloaded more than one file, repeat Steps c through f to copy all the software files and the update instructions. to the MAS.
4. Safely remove the USB drive from the server:
   a. Double-click the icon on the task bar to **Safely Remove Hardware**.
   b. Follow the prompts to safely remove the USB drive.
5. Repeat Steps 1 through 4 for each MAS in the system.
6. Open and review the installation instructions for this specific software update. If needed, modify the instructions in this guide to complete the update.

Installing the updates on each MAS

To install the Avaya software updates on this MAS:

1. Double-click the software update file the MAS, such as *MAS300100.exe*.

   The program unpacks the file, and then runs the Modular Messaging Installation Wizard.

2. In the Modular Messaging Installation Wizard window:

   a. Verify that all applicable patches for this system are selected.

   b. Click **Install**.

   If the **Install** button is not active, you do not need to apply these software updates to the system. Continue with Step 6.

   Note:

   For installation procedures and a description of components that can be installed, click the **Help** button on the installation wizard window.

3. If you are installing a Service Pack (SP), an Installation Wizard - Update Warning window opens. The window displays the hotfixes and Service Packs that the program must uninstall before the update can proceed. Click **Continue**.

   Note:

   If hotfixes are applied to the system that are not included in the SP update, the program lists them with a warning.

4. If this system does not have the correct version of Windows Installer, you must install it now. Otherwise, continue with Step 5:

   a. The Open File - Security Warning window prompts you to install a WindowsInstaller application from Microsoft Corporation. Click **Run**.

   b. Follow any additional prompts to install the new Windows Installer application. If the program prompts you to restart the server, reboot the system.

   c. If the new version of Windows Installer fails to install, you must install the updated WindowsInstaller application before you can proceed. For example, you might need to download the application separately, and install it using the local administrator account for this MAS.

5. After you click **Install**, monitor the software update progress:

   a. In the Services window, the Modular Messaging Installation Wizard stops all appropriate Modular Messaging and related services.

   b. Windows Installer then installs all relevant software updates on the MAS.

   c. In the Services window, click **Continue with installation**. You do not have to wait for all services to restart.

   d. After the installation is complete, click **Close**.

6. To verify the software updates that are installed on this MAS:
   a. Click **Start** > **Settings** > **Control Panel**.
   b. From the Control Panel window, double-click **Add/Remove Programs**.
   c. In the Add/Remove Programs window, click **Show updates**.
   d. Scroll down the list of installed programs to locate the Modular Messaging components installed on this computer. Modular Messaging components start with **MM**.
   e. Locate the software updates by name and installation date. For example:
      - **MM Caller Applications Editor Service Pack 7**
      - **MM Mailbox Monitor Server Patch 200-7953**
      - **MM Messaging Application Server Hotfix 1**
   f. Click any update to show support information, or to remove the update.
7. After installation and verification is complete, close all open windows.

Appendix F: Reloading software on an Avaya MAS

This appendix describes how to reload the operating system and application software on an Avaya Messaging Application Server (Avaya MAS) or an Avaya-provided supplementary server. You might install new software after a hard disk is replaced or as part of the upgrade of an Avaya MAS.

If a replacement disk drive is not provided, you will need to reload the operating system and application software for an Avaya MAS upgrade. See Upgrading Modular Messaging Software on page 174 for more information.

Loading new MAS software

To copy new software to the Avaya Messaging Application Server (Avaya MAS) or Avaya-provided supplementary server:

1. If the server is not on, turn on the server now by pressing the power button on the front of the server. For more information, see Turning on an S3500-family server system on page 42.
2. Verify that the monitor is showing the correct server.
   - For a 2-port Belkin KVM switch, the MAS is connected to one of the two computer ports.
   - For an 8-port Belkin KVM switch, the first MAS port is labeled **VGA 02**. Subsequent MASs and any supplementary servers, if present, are connected to computer ports **VGA 03**, **VGA 04**, and so on.
3. If the monitor displays a different server, toggle the ports to show the correct server.
   - To have a 2-port Belkin KVM switch show a different server:
     a. Slowly press **Scroll Lock** twice.

        The LED on top of the Belkin KVM switch starts to blink.

     b. Type the port number on the keyboard. For example, type **2** for port 2.
   - To have an 8-port Belkin KVM switch show a different server:
     a. Slowly press **Scroll Lock** twice within 2 seconds.
     b. Select the server to display using one of these methods:
        - Press the up (or down) arrow key to change to the server connected to a higher (or lower) port number.
        - Type the port number on the keyboard. For example, type **2** for port 2.

     For complete user and troubleshooting instructions, see the KVM switch documentation.

Loading the new software

To load the new software:

1. Insert Disk 1 of the *Avaya Modular Messaging Avaya Messaging Application Server and Boot Software for Microsoft Exchange* media into the DVD drive.

   Wait for green LED on the drive to go out.

2. Press **Ctrl** + **Alt** + **Del** to reboot the system.

   a. In the Windows Security window, click **Shut Down...**

   b. In the Shut Down Windows window, select **Restart** and click **OK**.

3. When the computer starts to boot, the system displays a warning that the hard drive contents will be overwritten.

   a. Press any key to continue.

      A message confirms that the hard drive will be overwritten.

   b. Press any key to continue.

   The MAS starts to copy the disk image to the hard disk. The entire copy procedure takes up to 30 minutes per DVD.

4. When the system prompts you, insert the next disk. When the DVD drive light turns dark, click **OK**.

5. Repeat step 4 for disk 3.

6. When prompted, remove the media before the system reboots. Press any key to continue.

   The system reboots and runs the Windows Setup program.

7. If a modem is connected, a Hardware Installation window opens. Click **Yes** to continue the installation.

8. The Windows Setup wizard runs. To complete the wizard:

   a. On the Welcome screen, click **Next**.

   b. On the License Agreement screen, choose **I accept this agreement**. Click **Next**.

   c. On the Your Product Key screen, type the Windows product key for this server.

   Note:

   Each Windows computer has a unique product key for the Windows 2003 operating system. Enter the number exactly as shown.

   Record the Windows product key in Table 23: Windows product keys for MASs on page 228.

- For a new S3500-family server, the product key sticker is located inside the empty drive tray on the lower-left of the server chassis. You can remove the drive tray to easily read the sticker.
- For a Release 3 upgrade, the Windows 2003 sticker ships with the software. Paste this sticker onto the server. Do not enter the old Windows 2000 product key.

d. Click **Next**.

The server automatically reboots.

Note:

On servers that use the latest motherboard, you might see the error message **System Event Log Full** when the system boots. You can ignore this message. Modular Messaging does not use this log.

Preparing the server to boot

You must load all required information and active the operating system before you activate the server configuration program:

1. When the system prompts you to log on:
   a. Press **Ctrl**+**Alt**+**Del**.
   b. In the Log On to Windows window, leave the user name as **Administrator**.
   c. Leave the password field blank.
   d. Press **Enter** or click **OK**.
2. You must activate the Microsoft Windows operating system before you restart the server. Use the site-specific procedures to activate Windows.

   CAUTION:

   You must copy the latest DCT data file to the C:\Avaya_Support directory now. Some servers do not recognize a USB drive after a system restart.
3. You must activate the Microsoft Windows operating system before you restart the server. For more information, see Activating Microsoft Windows on page 286.
4. To complete the software reload, double-click the **MM_Setup** icon on the desktop.

   An MM_Setup window opens.

   a. When the system prompts you, press any key to continue.

      The program reports that Modular Messaging configuration will start after the server reboots.

   b. Press any key to continue.

   The computer stores the information and shuts down.

5. To bring the MAS into service, continue with the appropriate procedure:
   - For an Avaya MAS upgrade, see Running the Modular Messaging Configuration Wizard on page 174.
   - For an Avaya MAS disk failure recovery, see Appendix G: Disk Failure Recovery on page 289.

Activating Microsoft Windows

You must activate the Microsoft Windows operating system whenever you reload the operating system. You must activate the Windows operating system before you restart the MAS.

The Microsoft Windows activation procedure requires you to use either the Internet or a telephone. Use the most appropriate method for the customer site:

- For Internet activation, continue with Activating Microsoft Windows through the Internet on page 286.
- For telephone activation, continue with Activating Microsoft Windows using a telephone on page 287.

Activating Microsoft Windows through the Internet

To activate the Microsoft Windows operating system through the Internet:

1. Double-click the **Internet Explorer** icon on the desktop.
2. At the Enhanced Security message, click **OK**.
3. In the Internet Explorer window, click **Tools** > **Internet Options**.
   a. In the Internet Options window, click the **Connections** tab.
   b. Click **LAN Settings**.
   c. In the Local Area Connection (LAN) Settings window, specify the settings to use for this site. Click **OK**.
   d. Click **OK** to close the Internet Options window.
   e. Close Internet Explorer.
4. Click **Start** > **Activate Windows**.
5. In the Activate Windows window:
   a. Click **Yes, let's activate Windows over the Internet now**.
   b. Click **Next**.

c. When the system prompts you to register the system, click **No**.

The program checks for Internet connectivity. If connectivity fails, you can set up or adjust the Internet connections. Complete the screen and click **Next** to continue.

6. On the Thank you screen, click **OK**.

Activating Microsoft Windows using a telephone

To activate the Microsoft Windows operating system using a telephone:

1. Click **Start** > **Activate Windows**.
2. In the Activate Windows window:
   a. Click **Yes, I want to telephone a customer service representative to activate Windows**.
   b. Click **Next**.

   The program generates a new installation ID.
3. On the Activate Windows by phone screen:
   a. Select the country in which this Modular Messaging system is installed.
   b. Call the appropriate telephone number shown on the screen.
   c. Follow the voice prompts or the directions from the customer service representative to provide the unique installation ID shown on the screen.
   d. Enter the confirmation ID that the automated system or customer service representative gives you.
   e. Click **Next**.
4. On the confirmation screen, click **Finish**.

Appendix G: Disk Failure Recovery

This appendix describes the procedure for recovering from a catastrophic disk failure on a system that is running Modular Messaging Release 3 software. See the checklist that is appropriate for your MAS:

For an Avaya MAS, see Recovering from a catastrophic disk failure on an Avaya MAS on page 290.

For a customer-provided MAS, see Recovering from a catastrophic disk failure on a customer-provided MAS on page 296.

If this MAS contained the Offline Folder Share, you must recreate the folder manually. When you reach that point in the procedure, see Creating the offline message share, if needed on page 302

Recovering from a catastrophic disk failure on an Avaya MAS

Overview

In summary, to restore an Avaya MAS you will need to:

1. Replace the failed drive
2. Install a new Avaya boot image
3. Run the Modular Messaging setup utility
4. Run the Modular Messaging Configuration wizard
5. Administer anti-virus software
6. Install Modular Messaging Active Directory Exchange extensions
7. Restore customer data
8. Configure the voice mail system
9. Configure services
10. Perform acceptance tests on the entire system
11. Back up the restored system and hand it off to the customer

Table 26: Avaya MAS restore procedure on page 292 lists the steps necessary to restore an Avaya MAS. It contains page references to detailed instructions for each step.

Requirements for restore of Avaya MAS

To successfully restore a system to Modular Messaging Release 3, you need:

- A replacement hard disk drive.
- Release 3 of the Modular Messaging application software.
  - *Avaya Modular Messaging Avaya Messaging Application Server and Boot Software for Microsoft Exchange* media
  - *Avaya Modular Messaging Messaging Application Server Software* media
  - *Avaya Modular Messaging Documentation*
- The following information and software from the Avaya Support Web site at http://www.avaya.com/support. For more information about how to access these items on the Web site, see Required documentation and software on page 1.

- The most current copy of the configuration notes for this switch integration.
- Avaya software updates that are required to bring the Avaya Modular Messaging software up to date after a restore. Download this software to a USB storage device. For more information about downloading the updates, see Updating Modular Messaging software on page 279.
- The latest copy of the Data Collection Tool. Download the DCT update file, **MMDCTDistribute.exe**, from the Avaya support site. Download it to a USB storage device.

- A completed copy of all relevant forms in Appendix A: System planning forms on page 209 and a printed copy of Table 26: Avaya MAS restore procedure on page 292.

  Note:

  A completed copy of the planning forms should be on file from the previous installation. Review these forms and verify that all fields are completed.

- A copy of the customer-provided Microsoft Exchange 2003 media or equivalent access to the 2003 System Management Tools and the Microsoft Exchange 2003 Service Pack 2.
- Access to the most recent DCT backup file as well as any backup files that will need to be restored to the system.

To restore an MAS configuration after a catastrophic disk failure, you must have a previously saved and updated Data Collection Tool (DCT) file. For information about maintaining a current DCT file, see Creating a Data Collection Tool File on page 156.

CAUTION:

You will not be able to restore the MAS without a DCT file that was created by analyzing the system.

Include the updated DCT file in any regular, scheduled backups administered for this site so that the file is available if needed for a restore.

Restoring the Avaya MAS

To restore the MAS, complete the tasks in the following checklist. As you complete a task, make a check mark in the " ✔ "column. For additional information or detailed procedures, see the referenced page number.

Table 26: Avaya MAS restore procedure

✔	Procedure	Page	Comments
	Download required Avaya software updates. This includes the latest Data Collection Tool.	3	Web access required.
	Collect any software media that is needed for the upgrade, such as Microsoft Windows updates or anti-virus software.	152	Leave customer media on-site.
	Obtain the Exchange System Management Tools 2003 and Service Pack 2 from the customer.		
	Obtain and review the configuration notes for any changes.		Web access required.
	Replace the hard drive. (For instructions for replacing an Avaya S3500 MAS hard drive, see the *Modular Messaging S3500-Family Hardware Maintenance and Additions* manual. For instructions for replacing an Avaya S3400 MAS hard drive, see Replacing an MAS drive in an S3400-family server on page 162.)		
	Copy the backup DCT data file to a USB storage device with the DCT update file, **MMDCTDistribute.exe**.		
	Verify that all additional backup files that must be restored are at a location accessible to the MAS. This includes: • customized tone files • customized prompt files • caller applications • Avaya license files. • SIP certificate files • WSO system services data file	147	See Backing up the system on page 147, for a complete list of the file names and their locations on the system.
	Use whatever method is required at this site to have the monitor display the Avaya MAS that you are restoring.	154	

Table 26: Avaya MAS restore procedure

✔	Procedure	Page	Comments
	Install a new boot image 1. Insert the *Avaya Modular Messaging Avaya Messaging Application Server and Boot Software for Microsoft Exchange* media in the DVD drive of the MAS. 2. Start the computer and insert or remove disks as prompted.	171	
	Install the Windows license.	171	
	Perform Windows Product Activation (WPA) to activate the operating system.	171	
	Copy the backup DCT file to the MAS.	173	
	Update the Data Collection Tool on the MAS.	173	
	Before beginning installation of the Modular Messaging software, be sure you are logged in to the MAS using the Modular Messaging customer account. See item A12 in Table 18: Modular Messaging logon accounts form on page 221.		
	Run MM_Setup from the desktop. The machine shuts down after the utility runs.	172	
	When the Modular Messaging Configuration Wizard launches, click **Next** on the Welcome screen. Select the back up DCT file by selecting the file if it is displayed on the Locate Configuration Data screen or by browsing to the file at the location where you placed it.	174	
	Review the DCT file and complete any empty fields. Save the file.	174	
	On the MAS Number screen, select the number of the MAS that you are recovering.	174	
	Complete the Windows Setup wizard and continue with the Modular Messaging Configuration Wizard.	174	
	Install Exchange 2003 System Management Tools.	175	
	Install Exchange Server 2003 SP2.	175	
	Install MSDE.	175	
	Install anti-virus software.	175	

Table 26: Avaya MAS restore procedure

✔	Procedure	Page	Comments
	After third part software is installed, complete the configuration wizard.	176	
	Administer anti-virus software.	178	
	Install Modular Messaging software updates.	179	
	Update Microsoft Windows with any new patches. Follow site-specific procedures.	180	
	Disable the private LAN.	180	
	Create an offline message share, if needed.	302	
	Install Modular Messaging Active Directory Exchange extensions on the MAS.	71	
	Configure port boards, if necessary.	111	Step is required only for port boards that do not use one of the automatic-configuration switch integrations. This is first step in port board configuration. Configuration is completed later in procedure.
	Resynchronize the FEDB.	181	
	Restore customer data including: • customized tone files • customized prompt files • caller applications • SIP certificate files • WSO system services data file	181	
	Specify the preferred language for the MAS.	115	
	Verify that Modular Messaging service is started before configuring the voice mail system.	115	
	If this is the MAS that held the Avaya license file, transmit the backup license file to the MAS using the preferred customer method. The recommended location for the license file is on MAS #1 in the C:\Avaya_Support directory. Install the license.	120	
	Verify license installation.	121	

Table 26: Avaya MAS restore procedure

✔	Procedure	Page	Comments
	Configure specific features as needed, including: • Call Me service • MWI service • Languages or TTS • Offline access to messages	122	
	Configure MAS-specific parameters: • INADS alarming, if used • Port boards • Switch integration	125	
	Restart messaging service.	128	
	Verify call-handling capability.	131	
	Verify alarming setup.	131	
	Verify Tracing Service operation, if you installed Tracing Server software on an MAS or supplementary server.	132	
	Set up test subscribers for each TUI used on the site, if they do not already exist in Active Directory.	136	
	Run all acceptance tests that are relevant to the system.	140	
	Verify creation of external caller objects including: Validate proxy addresses Validate mailbox rights	146	
	Backup the MAS using the regular backup procedures for this site. Be sure to include the revised DCT file in this backup.	147	
	Run the following tests: • Disk defragmenter system tool • chkdsk command	178	
	Complete steps necessary to turn the system over to the customer.	149	

Recovering from a catastrophic disk failure on a customer-provided MAS

Overview

There may be site-specific requirements and procedures for recovering from a catastrophic disk failure. Use the procedures appropriate to your site. The following is one procedure that can be used to recover the CPE MAS.

In summary, to restore a customer-provided MAS you will need to:

1. Replace the failed drive.
2. Configure a network card to support the corporate LAN connection
3. Manually join the Windows domain
4. Install and enable Windows services
5. Install the Modular Messaging Configuration Wizard
6. Run the Modular Messaging Configuration wizard
7. Administer anti-virus software
8. Install Modular Messaging Active Directory Exchange extensions
9. Restore customer data
10. Configure the voice mail system
11. Configure services
12. Perform acceptance tests on the entire system.
13. Back up the restored system and hand it off to the customer.

Table 27: CPE MAS restore procedure on page 298 lists the steps necessary to restore a customer-provided MAS. It contains page references to detailed instructions for each step.

Requirements for restore of CPE MAS

To successfully restore a system to Modular Messaging Release 3, you need:

- A replacement hard disk drive.
- Release 3 of the Modular Messaging application software.
  - *Avaya Modular Messaging Messaging Application Server Software* media

- *Avaya Modular Messaging Documentation*

- The following information and software from the Avaya Support Web site at http://www.avaya.com/support. For more information about how to access these items on the Web site, see Required documentation and software on page 1.
  - The most current copy of the configuration notes for this switch integration.
  - Avaya software updates that are required to bring the Avaya Modular Messaging software up to date after a restore. Download this software to a USB storage device. For more information about downloading the updates, see Updating Modular Messaging software on page 279.
  - The latest copy of the Data Collection Tool. Download the DCT update file, **MMDCTDistribute.exe**, from the Avaya support site. Download it to a USB storage device.
- A completed copy of all relevant forms in Appendix A: System planning forms on page 209 and a printed copy of Table 26: Avaya MAS restore procedure on page 292.

  Note:

  A completed copy of the planning forms should be on file from the previous installation. Review these forms and verify that all fields are completed.
- A copy of the customer-provided Microsoft Exchange 2003 media or equivalent access to the 2003 System Management Tools and the Microsoft Exchange 2003 Service Pack 2.
- Access to the most recent DCT backup file as well as any backup files that will need to be restored to the system.

To restore an MAS configuration with this procedure after a catastrophic disk failure, you must have a previously saved and updated Data Collection Tool (DCT) file. For information about maintaining a current DCT file, see Creating a Data Collection Tool File on page 192.

CAUTION:

You will not be able to restore the MAS without a DCT file that was created by analyzing the system.

Include the updated DCT file in any regular, scheduled backups administered for this site so that the file is available if needed for a restore.

Restoring the CPE MAS

To restore the MAS, complete the tasks in the following checklist. As you complete a task, make a check mark in the " ✔ "column. For additional information or detailed procedures, see the referenced page number.

Table 27: CPE MAS restore procedure

✔	Procedure	Page	Comments
	Download required Avaya software updates. This includes the latest version of the Data Collection Tool.	3	Web access required.
	Obtain the backup DCT data file. Copy it to a USB storage device with the DCT update file, **MMDCTDistribute.exe**.		
	Obtain the Exchange System Management Tools 2003 and Service Pack 2 from the customer.		
	Obtain virus-checking software for the MAS if required.	4	Customer obtains.
	Replace the hard drive. (For instructions for replacing a CPE MAS hard drive, see the manufacturers instructions.)		
	Install the Windows 2003 Server operating system.		
	Configure a network card to support the corporate LAN connection.	94	
	Manually join the Windows domain.	95	
	Adjust server default values to support Modular Messaging. Adjust: • Event Viewer values • File and Printer Sharing properties • Windows 2003 Server operating system values	96	
	Add the MM customer account and technical support account to the local administrators group.	97	
	Install Microsoft Windows SP1.	99	
	Install and enable Windows services, as required.	99	
	Verify that the USB storage device with the DCT file and DCT tool update is inserted in the USB port.	103	

Table 27: CPE MAS restore procedure

✔	Procedure	Page	Comments
	Copy the backup DCT file to a directory on the MAS.	102	
	Update the Data Collection Tool on the MAS.	103	
	Verify that all additional backup files that must be restored are at a location accessible to the MAS. This includes: • customized tone files • customized prompt files • caller applications • Avaya license files. • SIP certificate files • WSO system services data file	147	
	Before beginning installation of the Modular Messaging software, be sure you are logged in to the MAS using the Modular Messaging customer account. See item A12 in Table 18: Modular Messaging logon accounts form on page 221.		
	Install the Modular Messaging Configuration Wizard and enable the checkbox to launch the wizard.	102	
	When the Modular Messaging Configuration Wizard launches click **Next** on the Welcome screen. Select the back up DCT file by selecting the file, if displayed on the Locate Configuration Data screen, or by browsing to the file at the location where you placed it. (In the procedure, complete the steps for an existing DCT file, selecting the backup file.)	103	
	Review the DCT file and complete any empty fields. Save the file.	103	
	On the MAS Number screen, select the number of the MAS that you are recovering.	106	
	Install Exchange 2003 System Management Tools.	107	
	Install Exchange Server 2003 SP2.	107	
	Install MSDE.	107	
	Install Anti-virus software.	107	
	After third part software is installed, complete the configuration wizard.	108	
	Install updates to Modular Messaging software.	109	

Table 27: CPE MAS restore procedure

✔	Procedure	Page	Comments
	Set logging location if other than default.	110	
	Administer anti-virus software.	110	
	Create an offline message share, if needed.	302	
	Install Modular Messaging Active Directory Exchange extensions on the MAS.	71	
	Configure port boards, if necessary.	111	Step is required only for port boards that do not use one of the automatic-configuration switch integrations. This is first step in port board configuration. Configuration is completed later in procedure.
	Restore customer data including: • customized tone files • customized prompt files • caller applications • SIP certificate files • WSO system services data file		
	Specify the preferred language for the MAS.	115	
	Verify that Modular Messaging service is started before configuring the voice mail system.	115	
	If this is the MAS that held the Avaya license file, transmit the backup license file to the MAS using the preferred customer method. The recommended location for the license file is on MAS #1 in the C:\Avaya_Support directory. Install the license.	120	
	Verify license installation.	121	
	Configure specific features as needed, including: • Call Me service • MWI service • Languages or TTS • Offline access to messages	122	

Table 27: CPE MAS restore procedure

✔	Procedure	Page	Comments
	Configure MAS-specific parameters: • INADS alarming, if used • Port boards • Switch integration	125	
	Restart messaging service.	128	
	Verify call-handling capability.	131	
	Verify alarming setup.	131	
	Verify Tracing Service operation, if you installed Tracing Server software on an MAS or supplementary server.	132	
	Set up test subscribers for each TUI used on the site, if they do not already exist in Active Directory.	136	
	Run all acceptance tests that are relevant to the system.	140	
	Verify creation of external caller objects including: • Validate proxy addresses • Validate mailbox rights	146	
	Backup the MAS using the regular backup procedures for this site. Be sure to include the revised DCT file in this backup.	147	
	Run the following tests: • Disk defragmenter system tool • chkdsk command		
	Complete steps necessary to turn the system over to the customer.	149	

Creating the offline message share, if needed

Do this task only if the Offline Message Store is to be located on this MAS.

In a multiple-MAS system that uses the Offline Access feature, the system requires an offline message store to synchronize messages among the MASs. If the folder for offline message access is to be located on this MAS, you must first create the shared folder for the offline messages. The folder must be available before you can administer the Offline Access feature.

To create a shared folder for offline messages with the correct permissions:

1. Using Windows Explorer, create a new folder on this MAS. For example, create *OfflineStore* on the C: drive. For the correct folder name, see Item **10** in Table 14: Modular Messaging System Planning Form on page 213.
2. Right-click the folder name and select **Sharing and Security**.
3. In the Properties window, on the **Sharing** tab:
   a. Select **Share this folder**.
   b. Verify the **Share name**. For example, *OfflineStore.*
   c. Click **Permissions**.
      1. In the Permissions window, add the appropriate Modular Messaging logon accounts. See Table 18: Modular Messaging logon accounts form on page 221.
      2. Give the correct share permissions to the accounts. In the Permissions window:
         - Select each account in turn.
         - In the **Permissions** box, under **Allow**, select the permissions **Change** and **Read**, so the boxes are checked.
         - Repeat this task for each logon account.
      3. Click **OK** to close the Permissions window.
4. In the Properties window, click the **Security** tab.
   a. Click **Add**.
   b. Add all the Modular Messaging computer accounts that will access the offline storage server.
   c. Give the correct share permissions to these accounts. In the Properties window:
      1. Select each account in turn.
      2. In the **Permissions** box, under **Allow**, select the following permissions so the boxes are checked:
         - Modify
         - Read & Execute
         - List Folder Contents

- Read
- Write

3. Repeat this task for each logon account and each MAS local service account.

5. Click **OK** to close the Properties window.
6. Stop and restart MM Message Application Service on each MAS in the system for the offline access permissions to take effect.

Appendix H: Administrator reference

This appendix details the permissions and data schema modifications that are required to support Modular Messaging software in a Microsoft Exchange environment.

Exchange 2000 or 2003 permissions

Avaya Modular Messaging customer account permissions are covered in Assigning permissions to the customer account group on page 62. This section details why the Modular Messaging customer account must be added to the following groups:

- The BuiltIn/Account Operators group in each domain contains accounts that will be enabled for Avaya Modular Messaging. This ensures that the Modular Messaging software has rights to perform the following operations:
  - Provide full access to the ms-Exch-Extension-Data attribute for user objects that are to be enabled for Modular Messaging. This access right is required to enable Modular Messaging subscriber accounts.
  - Create container objects. Avaya Modular Messaging creates a voice mail domain container. By default, the voice mail domain container is located at the root of the domain for which the Modular Messaging customer account is a member. This container stores the directory objects required for the Messaging Application Server and Mailbox Monitor Server software components.

    If the Modular Messaging customer account does not have sufficient privileges to create container objects at the base location of the domain that contains the customer account, a voice mail domain container must be created manually. For this procedure, see Creating the voice mail domain container manually if required on page 64.
  - Create User objects, and mailbox-enable User objects, in the voice mail domain container. This right is required for the operation of the Messaging Application Server and Mailbox Monitor Server software.
- The BuiltIn/Administrators group in the domain that contains the Global Catalog servers, that will be used as peer-directory servers for Avaya Modular Messaging servers. This can be the domain that contains the customer account, or any sub-domain that contains the customer account. The right enables the Modular Messaging software to obtain search results from the peer-directory server, including recently deleted objects. This allows Avaya Modular Messaging to maintain consistency in its Front End Database (FEDB).

The following table details the property permissions required to support Modular Messaging and their purpose. It also indicates the lowest level in the Exchange Service property tree that this permission should be applied.

Table 28: Required switch and messaging information

Permission	Description	Applies to this object and subcontainers	Modular Messaging requirement
Read	Read permission for items in container	Mailbox Store	Core requirement
Execute	Execute permission for items in container	Mailbox Store	Automatic with “Read”
Read Permissions	Ability to read the permissions for an object	Mailbox Store	Automatic with “Read”
Create Children	Ability to create an object below the current object	Connectors	Octel Analog Networking
List Contents	Displays the contents and children of an object	Exchange Organization	Exchange System Manager
Read Properties	Allows for Properties to be read from the class object	Administrative Group	Core requirement
Write Properties	Allows for existing class object Properties to be written to	Connectors	Octel Analog Networking
Administer Information Store	Allows creation of objects at root of folder	Mailbox Store	Voicemail Domain Mailbox
Create Named Properties in the Information Store	Allows new properties to be added to the class object	Mailbox Store	User Admin
View Information Store Status	Required for MAPI Logon	Mailbox Store	External Caller Mailbox
Receive As	Receive on behalf of privilege	Mailbox Store	Core requirement
Send As	Send on behalf of privilege	Mailbox Store	Core requirement

Active Directory schema updates

Avaya Modular Messaging software requires the following changes to be made to the schema in an Exchange 2000 or 2003 environment before any other Modular Messaging server components are installed, you must:

- Enable replication of the ms-Exch-Extension-Data attribute in the Global Catalog.
- Increase the maximum amount of data that can be stored in the ms-Exch-Extension-Data attribute to 64KB. This increased storage is used for G7.11 audio encoding format, which is typically used only on systems that support Teletypewriter (TTY).
- Add classes and attributes for Octel Analog Messaging (if applicable).

The Modular Messaging software stores information about subscriber configurations in the ms-Exch-Extension-Data attribute. So that Modular Messaging MASs can obtain this information, this attribute must be replicated in the Global Catalog, a central repository for information about objects in the Windows 2000 or 2003 forest. When the replication is enabled, the system instructs the Global Catalog servers to include the ms-Exch-Extension-Data attribute in the list of objects replicated in the Windows 2000 or 2003 forest.

Replication of the ms-Exch-Extension-Data in the Global Catalog is also necessary for the correct operation of the Modular Messaging Client software (formerly called the Subscriber Options package). This is because the MAPI address book provider for Active Directory uses the Global Catalog as its data source. Replication is required for MAPI to support access to client applications, such as the MM Client software, through the PR_EMS_AB_EXTENSION_DATA property.

When the Modular Messaging Subscriber Administration extensions software component is installed, the software makes the following changes:

- Adds a Modular Messaging property page for each user in Active Directory Users and Computers. More specifically, the guide “A6688A44-CEDE-456E-AE57-3567D9909AE7” is added to the multi-valued attribute adminPropertyPages on the user-Display object, which has the dn: CN=user-Display,CN=409, CN=DisplaySpecifiers,CN=Configuration,DC=mycorp,DC=com.
- Copies files for the software components required to display the Modular Messaging property page to the Program Files\Avaya Modular Messaging directory.

Appendix I: Removing Modular Messaging components from an MAS

This appendix describes how to remove Modular Messaging software components from a server where they are currently installed. Normally this procedure is used to prepare a server for reassignment to another purpose.

CAUTION:

Do not uninstall any of the following Modular Messaging services from an MAS that is running the Messaging Application Server service.

To stop running unneeded services on an in-service MAS, move services to other servers using the Modular Messaging administration tools and disable the services that the server does not need.

- MM Alarming Server service
- MM Call Me
- MM Event Monitor Server
- MM Mailbox Monitor
- MM Messaging Application Server
- MM MWI
- MM Performance Monitor Server
- MM Process Monitor Server
- MM Service Connector
- MM Tracing Server

Removing software components

To remove Modular Messaging software components, use the Modular Messaging Uninstallation Wizard.

1. Click **Start** > **Settings** > **Control Panel**.
2. From the Control Panel window, double-click **Add/Remove Programs**.
3. In the Add/Remove Programs window, scroll down the list of currently installed programs to **MM Uninstallation Wizard**.

   Important:
   Do not use **Add/Remove Programs** to uninstall the **MM** services listed. Use only the **MM Uninstallation Wizard**.

4. Select the Modular Messaging software components that you want to remove.
5. Click **Uninstall** and follow the prompts to confirm your choices.
6. The removed components will continue to appear in the **Add/Remove Programs** list until you close and reopen **Add/Remove Programs**.

Index

Symbols

A

B

C

D

E

F

G

H

I

J

K

L

M

N

O

P

Q

R

S

T

U

V

W