IP Office 8.1

Installing IP Office Basic Edition - Quick Mode

15-601042 Issue 27s - (29 July 2015)

© 2015 AVAYA All Rights Reserved.

Notice
While reasonable efforts have been made to ensure that the information in this document is complete and accurate at the time of printing, Avaya assumes no liability for any errors. Avaya reserves the right to make changes and corrections to the information in this document without the obligation to notify any person or organization of such changes.
For full support, please see the complete document, Avaya Support Notices for Hardware Documentation, document number 03–600759.
For full support, please see the complete document, Avaya Support Notices for Software Documentation, document number 03–600758.
To locate this document on our website, simply go to http://www.avaya.com/support and search for the document number in the search box.

Documentation disclaimer
"Documentation" means information published by Avaya in varying mediums which may include product information, operating instructions and performance specifications that Avaya generally makes available to users of its products. Documentation does not include marketing materials. Avaya shall not be responsible for any modifications, additions, or deletions to the original published version of documentation unless such modifications, additions, or deletions were performed by Avaya. End User agrees to indemnify and hold harmless Avaya, Avaya's agents, servants and employees against all claims, lawsuits, demands and judgments arising out of, or in connection with, subsequent modifications, additions or deletions to this documentation, to the extent made by End User.

Link disclaimer
Avaya is not responsible for the contents or reliability of any linked websites referenced within this site or documentation provided by Avaya. Avaya is not responsible for the accuracy of any information, statement or content provided on these sites and does not necessarily endorse the products, services, or information described or offered within them. Avaya does not guarantee that these links will work all the time and has no control over the availability of the linked pages.

Warranty
Avaya provides a limited warranty on its hardware and Software ("Product(s)"). Refer to your sales agreement to establish the terms of the limited warranty. In addition, Avaya's standard warranty language, as well as information regarding support for this Product while under warranty is available to Avaya customers and other parties through the Avaya Support website: http://support.avaya.com. Please note that if you acquired the Product(s) from an authorized Avaya Channel Partner outside of the United States and Canada, the warranty is provided to you by said Avaya Channel Partner and not by Avaya. "Software" means computer programs in object code, provided by Avaya or an Avaya Channel Partner, whether as stand-alone products or pre-installed on hardware products, and any upgrades, updates, bug fixes, or modified versions.

Licenses
THE SOFTWARE LICENSE TERMS AVAILABLE ON THE AVAYA WEBSITE, HTTP://SUPPORT.AVAYA.COM/LICENSEINFO ARE APPLICABLE TO ANYONE WHO DOWNLOADS, USES AND/OR INSTALLS AVAYA SOFTWARE, PURCHASED FROM AVAYA INC., ANY AVAYA AFFILIATE, OR AN AUTHORIZED AVAYA CHANNEL PARTNER (AS APPLICABLE) UNDER A COMMERCIAL AGREEMENT WITH AVAYA OR AN AUTHORIZED AVAYA CHANNEL PARTNER. UNLESS OTHERWISE AGREED TO BY AVAYA IN WRITING, AVAYA DOES NOT EXTEND THIS LICENSE IF THE SOFTWARE WAS OBTAINED FROM ANYONE OTHER THAN AVAYA, AN AVAYA AFFILIATE OR AN AVAYA AUTHORIZED AVAYA CHANNEL PARTNER; AVAYA RESERVES THE RIGHT TO TAKE LEGAL ACTION AGAINST YOU AND ANYONE ELSE USING OR SELLING THE SOFTWARE WITHOUT A LICENSE. BY INSTALLING, DOWNLOADING OR USING THE SOFTWARE, OR AUTHORIZING OTHERS TO DO SO, YOU, ON BEHALF OF YOURSELF AND THE ENTITY FOR WHOM YOU ARE INSTALLING, DOWNLOADING OR USING THE SOFTWARE (HEREINAFTER REFERRED TO INTERCHANGEABLY AS "YOU" AND "END USER"), AGREE TO THESE TERMS AND CONDITIONS AND CREATE A BINDING CONTRACT BETWEEN YOU AND AVAYA INC. OR THE APPLICABLE AVAYA AFFILIATE ("AVAYA").
Avaya grants you a license within the scope of the license types described below, with the exception of Heritage Nortel Software, for which the scope of the license is detailed below. Where the order documentation does not expressly identify a license type, the applicable license will be a Designated System License. The applicable number of licenses and units of capacity for which the license is granted will be one (1), unless a different number of licenses or units of capacity is specified in the documentation or other materials available to you. "Designated Processor" means a single stand-alone computing device. "Server" means a Designated Processor that hosts a software application to be accessed by multiple users.

License type(s)
Designated System(s) License (DS). End User may install and use each copy of the Software only on a number of Designated Processors up to the number indicated in the order. Avaya may require the Designated Processor(s) to be identified in the order by type, serial number, feature key, location or other specific designation, or to be provided by End User to Avaya through electronic means established by Avaya specifically for this purpose.

Concurrent User License (CU). End User may install and use the Software on multiple Designated Processors or one or more Servers, so long as only the licensed number of Units are accessing and using the Software at any given time. A "Unit" means the unit on which Avaya, at its sole discretion, bases the pricing of its licenses and can be, without limitation, an agent, port or user, an e-mail or voice mail account in the name of a person or corporate function (e.g., webmaster or helpdesk), or a directory entry in the administrative database utilized by the Software that permits one user to interface with the Software. Units may be linked to a specific, identified Server.

Database License (DL). End User may install and use each copy of the Software on one Server or on multiple Servers provided that each of the Servers on which the Software is installed communicates with no more than a single instance of the same database.

CPU License (CP). End User may install and use each copy of the Software on a number of Servers up to the number indicated in the order provided that the performance capacity of the Server(s) does not exceed the performance capacity specified for the Software. End User may not reinstall or operate the Software on Server(s) with a larger performance capacity without Avaya's prior consent and payment of an upgrade fee.

Named User License (NU). You may: (i) install and use the Software on a single Designated Processor or Server per authorized Named User (defined below); or (ii) install and use the Software on a Server so long as only authorized Named Users access and use the Software. “Named User”, means a user or device that has been expressly authorized by Avaya to access and use the Software. At Avaya’s sole discretion, a “Named User” may be, without limitation, designated by name, corporate function (e.g., webmaster or helpdesk), an e-mail or voice mail account in the name of a person or corporate function, or a directory entry in the administrative database utilized by the Software that permits one user to interface with the Software.

Shrinkwrap License (SR). You may install and use the Software in accordance with the terms and conditions of the applicable license agreements, such as “shrinkwrap” or “clickthrough” license accompanying or applicable to the Software (“Shrinkwrap License”).

Heritage Nortel Software
“Heritage Nortel Software” means the software that was acquired by Avaya as part of its purchase of the Nortel Enterprise Solutions Business in December 2009. The Heritage Nortel Software currently available for license from Avaya is the software contained within the list of Heritage Nortel Products located at http://support.avaya.com/LicenseInfo under the link “Heritage Nortel Products”. For Heritage Nortel Software, Avaya grants Customer a license to use Heritage Nortel Software provided hereunder solely to the extent of the authorized activation or authorized usage level, solely for the purpose specified in the Documentation, and solely as embedded in, for execution on, or (in the event the applicable Documentation permits installation on non-Avaya equipment) for communication with Avaya equipment. Charges for Heritage Nortel Software may be based on extent of activation or use authorized as specified in an order or invoice.

Copyright
Except where expressly stated otherwise, no use should be made of materials on this site, the Documentation, Software, or hardware provided by Avaya. All content on this site, the documentation and the Product provided by Avaya including the selection, arrangement and design of the content is owned either by Avaya or its licensors and is protected by copyright and other intellectual property laws including the sui generis rights relating to the protection of databases. You may not modify, copy, reproduce, republish, upload, post, transmit or distribute in any way any content, in whole or in part, including any code and software unless expressly authorized by Avaya. Unauthorized reproduction, transmission, dissemination, storage, and or use without the express written consent of Avaya can be a criminal, as well as a civil offense under the applicable law.

Virtualization
Each vAppliance will have its own ordering code. Note that each instance of a vAppliance must be separately ordered. If the end user customer or Avaya channel partner would like to install two of the same type of vAppliances, then two vAppliances of that type must be ordered.
Each Product has its own ordering code. Note that each instance of a Product must be separately licensed and ordered. “Instance” means one unique copy of the Software. For example, if the end user customer or Avaya channel partner would like to install two instances of the same type of Products, then two Products of that type must be ordered.

Third Party Components
“Third Party Components” mean certain software programs or portions thereof included in the Software that may contain software (including open source software) distributed under third party agreements (“Third Party Components”), which contain terms regarding the rights to use certain portions of the Software (“Third Party Terms”). Information regarding distributed Linux OS source code (for those Products that have distributed Linux OS source code) and identifying the copyright holders of the Third Party Components and the Third Party Terms that apply is available in the Documentation or on Avaya’s website at: http://support.avaya.com/Copyright. You agree to the Third Party Terms for any such Third Party Components.

Note to Service Provider
The Product may use Third Party Components that have Third Party Terms that do not allow hosting and may need to be independently licensed for such purpose.

Preventing Toll Fraud
“Toll Fraud” is the unauthorized use of your telecommunications system by an unauthorized party (for example, a person who is not a corporate employee, agent, subcontractor, or is not working on your company's behalf). Be aware that there can be a risk of Toll Fraud associated with your system and that, if Toll Fraud occurs, it can result in substantial additional charges for your telecommunications services.

Avaya Toll Fraud intervention
If you suspect that you are being victimized by Toll Fraud and you need technical assistance or support, call Technical Service Center Toll Fraud Intervention Hotline at +1-800-643-2353 for the United States and Canada. For additional support telephone numbers, see the Avaya Support website: http://support.avaya.com. Suspected security vulnerabilities with Avaya products should be reported to Avaya by sending mail to: securityalerts@avaya.com.

Trademarks
The trademarks, logos and service marks (“Marks”) displayed in this site, the Documentation and Product(s) provided by Avaya are the registered or unregistered Marks of Avaya, its affiliates, or other third parties. Users are not permitted to use such Marks without prior written consent from Avaya or such third party which may own the Mark. Nothing contained in this site, the Documentation and Product(s) should be construed as granting, by implication, estoppel, or otherwise, any license or right in and to the Marks without the express written permission of Avaya or the applicable third party.
Avaya is a registered trademark of Avaya Inc.
All non-Avaya trademarks are the property of their respective owners. Linux® is the registered trademark of Linus Torvalds in the U.S. and other countries.

Downloading Documentation
For the most current versions of Documentation, see the Avaya Support website: http://support.avaya.com.

Contact Avaya Support
See the Avaya Support website: http://support.avaya.com for product notices and articles, or to report a problem with your Avaya product. For a list of support telephone numbers and contact addresses, go to the Avaya Support website: http://support.avaya.com, scroll to the bottom of the page, and select Contact Avaya Support.

Contents

1. System Overview

1.1 IP Office Modes ... 13
1.1.1 Overall Capacity ... 14
1.1.2 Hardware Support Summary ... 15
1.1.3 Feature Support Summary ... 17
1.2 IP500 V2 System Components ... 18
1.3 Control Unit Cards ... 20
1.3.1 IP500 Base Cards ... 20
1.3.2 IP500 Trunk Cards ... 22
1.4 External Expansion Modules ... 23
1.4.1 IP500 External Expansion Modules ... 24
1.5 Power Supplies and Cables ... 25
1.5.1 Power Supplies ... 25
1.5.2 Power Supply Cords ... 26
1.5.3 Power Supply Backup ... 27
1.5.4 Cabling and Cables ... 28
1.5.5 Grounding ... 30
1.5.6 Lightning Protection/Out-of-Building Connections ... 31
1.6 Wall and Rack Mounting ... 32
1.7 Feature Keys and Licenses ... 34
1.8 IP Office Phones ... 35
1.9 SIP Trunks ... 37
1.10 Supported Country Locales ... 38
1.11 Training ... 39
1.12 Web Sites ... 39
1.13 Emergency and Power Failure Ports ... 40

2. Installation Requirements

2.1 Environmental Requirements ... 42
2.2 Space Requirements ... 43
2.2.1 IP500 and IP500 V2 Control Units ... 44
2.2.2 External Expansion Modules ... 44
2.2.3 Wall Mounting ... 45
2.2.4 Rack Space Requirements ... 47

3. Administration Software

3.1 Phone Based Administration ... 51
3.2 Browser Based Administration - IP Office Web Manager ... 51
3.3 Administration Suite Applications ... 53
3.3.1 Installing the Admin Applications ... 53
3.3.2 Installer PC Connection ... 55
3.3.3 Starting IP Office Manager ... 56
3.3.4 Starting System Status ... 57
3.3.5 Starting Monitor ... 58

4. IP500 V2 Installation

4.1 Tools and Equipment Required ... 61
4.2 Documentation ... 62
4.3 Unpacking ... 63
4.4 IP500 Card Installation ... 64
4.4.1 IP500 Daughter Card Preparation ... 65
4.4.2 IP500 Card Insertion ... 66
4.5 Wall Mounting ... 67
4.5.1 Wall Mounting Kit V2/V3 ... 68
4.5.2 Wall Mounting Kit V1 ... 69
4.6 Rack Mounting ... 70
4.7 Connecting External Expansion Modules ... 72
4.8 Grounding ... 74
4.9 Network Connection ... 75
4.10 Starting the System ... 76
4.10.1 Checking the LEDs ... 77
4.11 Connecting Phones ... 79
4.11.1 Analog Phones ... 79
4.11.2 ETR Phones ... 79
4.11.3 DS Phones ... 79
4.11.4 TCM Phones ... 80

5. Initial Configuration Using IP Office Web Manager

5.1 Enabling IP Office Web Manager ... 83
5.2 Displaying a System's IP Address ... 84
5.3 PC Connection ... 84
5.4 Logging In ... 85
5.5 Changing the Default Passwords ... 86
5.6 Setting the System Mode (PBX or Key) ... 87
5.7 Setting the System Country ... 88
5.8 Setting the System Language ... 89
5.9 Setting the Number of Lines ... 90
5.10 Adding Licenses ... 91
5.11 Changing Network Settings ... 93
5.12 Setting the Emergency Numbers ... 94
5.13 Setting the Outside Line Prefix ... 95
5.14 Music on Hold ... 95
5.15 Automatic Line Selection ... 96
5.16 Logging Out ... 96

6. Initial Configuration Using IP Office Manager

6.1 Entering Licenses ... 99
6.2 Setting the System Locale ... 100
6.3 Select Key System or PBX System Mode ... 101
6.4 Changing the IP Address Settings ... 102
6.5 Changing the Default Passwords ... 103
6.6 Extension Numbering ... 104

7. On-Boarding

7.1 Logging In to Web Manager ... 110
7.2 On-Boarding ... 111

8. Additional Processes

8.1 Enabling IP Office Web Manager ... 115
8.2 Switching Off an IP Office System ... 116
8.3 Rebooting an IP Office System ... 117
8.4 Memory Card Removal ... 118
8.5 Memory Card Reinsertion ... 119
8.6 Changing Components ... 120
8.7 Upgrading the IP Office Software ... 122
8.7.1 Using the Upgrade Wizard ... 123
8.7.2 Using an SD Card ... 125
8.8 Out of Building Telephone Installations ... 126
8.8.1 DS Phones ... 127
8.8.2 Analog Phone Barrier Box ... 128
8.8.3 Rack Mounting Barrier Boxes ... 129

8.9 Using the External Output Port ... 130
8.9.1 Port Connection ... 130
8.10 Reset Button ... 131
8.11 AUX Button ... 131
8.12 DTE Port Maintenance ... 132
8.12.1 DTE Port Settings ... 132
8.12.2 Erasing the Configuration ... 133
8.12.3 Defaulting Security Settings ... 135
8.12.4 Erasing the Operational Firmware ... 136

9. SD Card Management

9.1 Booting from the SD Cards ... 143
9.2 Creating an IP Office SD Card ... 145
9.3 Viewing the Card Contents ... 147
9.4 Backing Up the System SD Card ... 148
9.4.1 Backing Up the Primary Folder ... 148
9.4.2 Restore from the Backup Folder ... 149
9.4.3 Backing Up to the Optional Card ... 150
9.4.4 Restoring from the Optional Card ... 151
9.5 Upgrading Card Software ... 153
9.5.1 Upgrading Remotely Using Manager ... 154
9.5.2 Upgrading the SD Card Locally ... 154
9.5.3 Upgrading Using an Optional SD Card ... 155
9.6 Removing SD Cards ... 156
9.6.1 Card Shutdown ... 156
9.6.2 Card Startup ... 157
9.6.3 System Shutdown ... 158

10.System Components

10.1 IP500 V2 Control Unit ... 161
10.2 IP500 Base Cards ... 164
10.2.1 Analog Phone ... 166
10.2.2 ATM Combination Card ... 167
10.2.3 BRI Combination Card ... 170
10.2.4 Digital Station ... 171
10.2.5 ETR6 Card ... 172
10.2.6 TCM8 Digital Station ... 174
10.3 IP500 Trunk Daughter Cards ... 175
10.3.1 Analog Trunk Card ... 176
10.3.2 BRI Trunk Cards ... 178
10.3.3 PRI Trunk Cards ... 179
10.4 IP500 Expansion Modules ... 180
10.4.1 Analog Trunk 16 ... 181
10.4.2 Digital Station 16/30 ... 183
10.4.3 Digital Station 16A/30A ... 185
10.4.4 Digital Station 16B/30B ... 188
10.4.5 Phone 16/30 ... 190
10.5 Feature Keys ... 192
10.5.1 IP500 V2 System SD Cards ... 192
10.6 Mounting Kits ... 194
10.6.1 IP500 Wall Mounting Kits ... 194
10.6.2 IP500 Rack Mounting Kit ... 195
10.6.3 IP400 Rack Mounting Kit ... 195
10.6.4 Barrier Box Rack Mounting Kit ... 195
10.7 Phones ... 196
10.7.1 1403 ... 198
10.7.2 1408 ... 199
10.7.3 1416 ... 200
10.7.4 3910 ... 201
10.7.5 3920 ... 201
10.7.6 9504 ... 202
10.7.7 9508 ... 203
10.7.8 Audio Conferencing Unit ... 204
10.7.9 ETR 6, ETR 6D ... 205
10.7.10 ETR 18, ETR 18D ... 206
10.7.11 ETR 34D ... 207
10.7.12 M7100 ... 208
10.7.13 M7100N ... 208
10.7.14 M7208 ... 209
10.7.15 M7208N ... 209
10.7.16 M7310 ... 210
10.7.17 M7310N ... 210
10.7.18 M7324 ... 211
10.7.19 M7324N ... 211
10.7.20 T7000 ... 212
10.7.21 T7100 ... 212
10.7.22 T7208 ... 213
10.7.23 T7316 ... 214
10.7.24 T7316E ... 215
10.7.25 T7406, T7406e ... 216
10.8 Phone Add-Ons ... 217
10.8.1 DBM32 ... 218
10.8.2 KLM Module ... 219
10.8.3 T7316e KEM ... 220
10.9 Ancilliary Systems ... 221
10.9.1 Digitial Mobility Solution ... 221
10.10 Applications ... 222
10.10.1 Manager ... 223
10.10.2 Monitor ... 224
10.10.3 Flare Communicator for IP Office ... 225
10.10.4 IP Office Video SoftPhone ... 227
10.10.5 System Status Application (SSA) ... 228
10.10.6 IP Office Ports ... 229
10.11 Physical Ports ... 230
10.11.1 Cables ... 231
10.11.2 ANALOG Port ... 233
10.11.3 AUDIO Port ... 233
10.11.4 BRI Port (To) ... 234
10.11.5 DC I/P Port ... 235
10.11.6 DS Ports (RJ45) ... 235
10.11.7 EF Port ... 236
10.11.8 RS232 DTE Port ... 236
10.11.9 ETR Port ... 237
10.11.10 EXPANSION Port ... 238
10.11.11 EXT O/P Port ... 238
10.11.12 LAN Port ... 239
10.11.13 PF Port ... 240
10.11.14 PHONE (POT) Port ... 241
10.11.15 PRI Port ... 243
10.11.16 TCM Port (RJ21) ... 244
10.12 Licences ... 245
10.12.1 System Edition Licenses ... 246
10.12.2 Upgrade Licenses ... 247
10.12.3 Trunk Licensing ... 248
10.13 Hardware PCS Levels ... 249
10.14 TAA ... 249

11.Safety Statements

11.1 Lithium Batteries 252
11.2 Lightning Protection/Hazard Symbols 252
11.3 Trunk Interface Modules 253
11.4 Further Information and Product Updates 254
11.5 Port Safety Classification 254
11.6 EMC Directive 255
11.7 Regulatory Instructions for Use 256
11.7.1 Australia 256
11.7.2 Canada 256
11.7.3 China 257
11.7.4 European Union 258
11.7.5 New Zealand 258
11.7.6 FCC Notification 259
11.7.7 Compliance with FCC Rules 261

12.Document History

Index 265

Chapter 1.
System Overview

1. System Overview

This documentation is intended to assist with the installation of the core components of an **Avaya IP Office Basic Edition - Quick Mode** telephone systems based on IP500 V2 hardware. It describes those components and factors that should be considered for an installation.

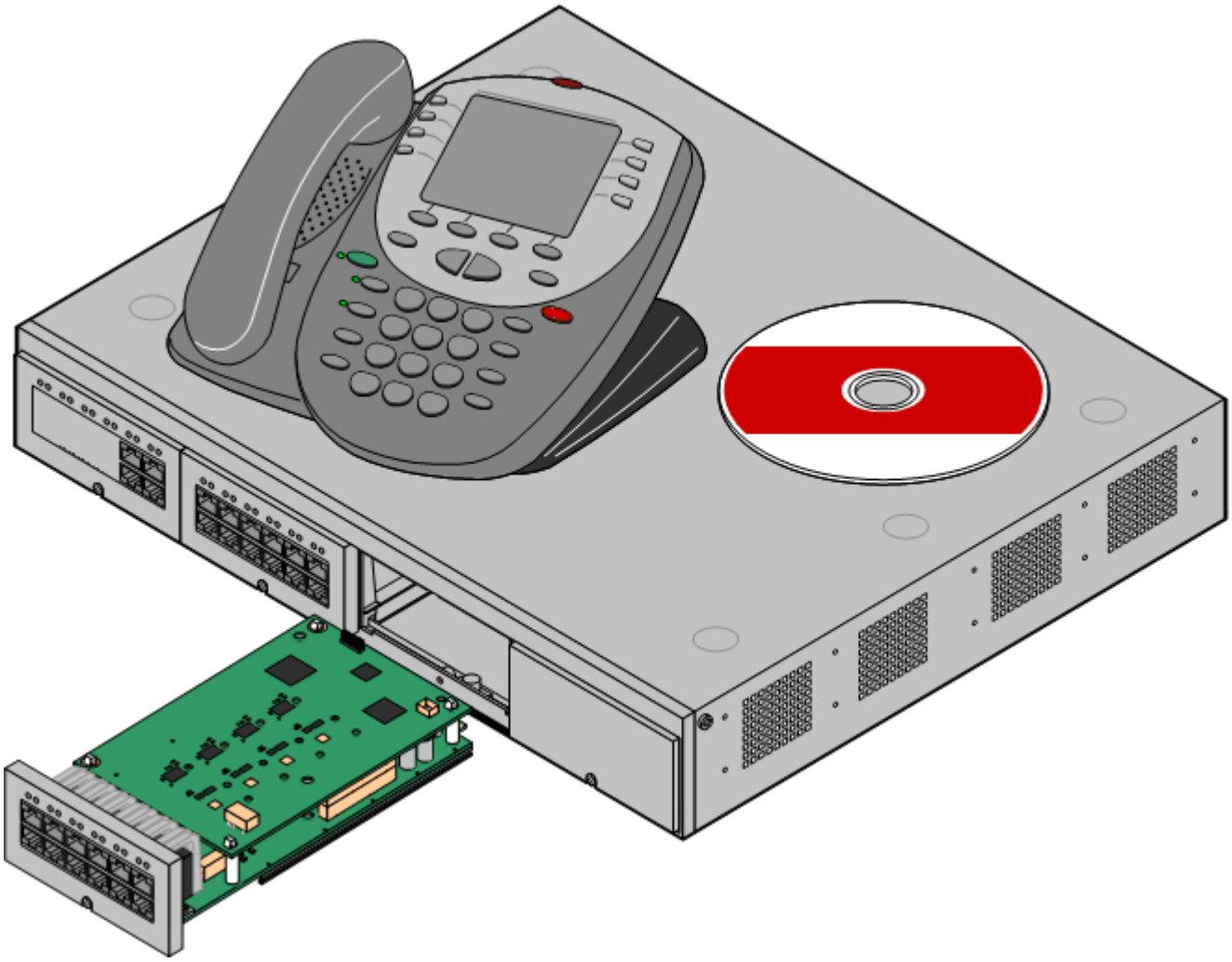

- The IP Office is a converged voice and data communications system. It should therefore only be installed by persons with telephony and IP data network experience.
- Installers must be trained on IP Office systems. Through its Avaya University 39 (AU), Avaya provides a range of training courses including specific IP Office implementation and installation training. It also provides certification schemes for installers to achieve various levels of IP Office accreditation.
- It is the installer's responsibility to ensure that all installation work is done in accordance with local and national regulations and requirements. It is also their responsibility to accurately establish the customer's requirements before installation and to ensure that the installation meets those requirements.
- You should read and understand this documentation before installation. You should also obtain and read the Avaya Technical Bulletins relevant to recent IP Office software and hardware releases to ensure that you are familiar with any changes to the IP Office equipment and software.

*The IP500 V2 units can be used for Server Edition networks as Expansion systems to provide trunk and telephone connection ports. Therefore the hardware compatibility notes for the IP500 V2 control unit in this manual remain applicable for Server Edition usage.

Additional Documentation

The following components of IP Office are outside the range of a basic IP Office installation. They are covered by separate installation and configuration documentation. If those components are to be part of the IP Office system installation, that documentation should be obtained, read and understood prior to the installation.

- ***IP Office Product Description***
  Covers the features provided by IP Office 8.1 - IP Office Basic Edition - Quick Mode.
- ***IP Office Basic Edition - Quick Mode Installation Manual***
  Covers the equipment supported and the installation of that equipment.
- ***IP Office Basic Edition - Quick Mode Web Based Manager***
  Covers the system programming that can be performed via web browser.
- ***IP Office Basic Edition - Quick Mode Manager Manual***
  Covers the system programming that can be performed using the IP Office Manager application.
- ***IP Office Basic Edition - Quick Mode Phone Based Administration Manual***
  Covers the range of system programming that can performed from the first two extensions in the system.
- **! IP Office Technical Bulletins**
  Ensure that you have obtained and read the IP Office Technical Bulletin relating to the IP Office software release which you are installing. This bulletin will contain important information that may not have been included in this manual. IP Office Technical Bulletins are available from the Avaya support website (*http://support.avaya.com*).
- **! Upgrade Licenses**
  Some upgrades may require entry of upgrade licenses. It is still possible to upgrade the system without the necessary licenses, however the system will not provide any telephony functions after the upgrade until the appropriate license is added to the system configuration.

Equipment Availability

SAP codes and details of specific items within this documentation are for reference only. Items available in any specific locale should be confirmed against the local Avaya IP Office price list for that locale. The local price list may also include additional items relative to the installation requirements of that locale.

This documentation covers the equipment supported by IP Office Release 8.1. That includes equipment supported but no longer available as new from Avaya.

Repair

IP Office systems do not contain any user serviceable or repairable components. If a faulty unit is suspected the whole unit should be replace. IP500 control units should not be opened under any circumstances except the insertion of an IP500 base card.

RoHS

RoHS is a European Union directive for the Removal of Certain Hazardous Substances from Electrical and Electronic Equipment. Similar legislation has been or is being introduced in a number of other countries. Avaya has decided to make its global product range compliant with the requirements of RoHS.

The actions taken vary

- In some cases equipment has been discontinued and is no longer available from Avaya.
- In some cases new manufactured stock has been made RoHS compliant and keeps its existing SAP code.
- In other cases the equipment has been replaced by a new RoHS compliant alternative with new SAP codes.
- The SAP codes within this document are for RoHS compliant equipment unless otherwise stated.

1.1 IP Office Modes

IP Office systems based on the IP500 V2 control unit can run in a number of modes:

- **IP Office Essential Edition**
  For IP Office Release 8.0, systems in this mode require an **Essential Edition** license added to the configuration. Systems without a license will not support any telephony functions. Additional licenses can then be added, including licenses for **IP Office Preferred Edition** and **IP Office Advanced Edition** operation. Throughout this document, unless stated otherwise, **IP Office Essential Edition** is used to refer to **IP Office Essential Edition**, **IP Office Preferred Edition** and **IP Office Advanced Edition**.
- **IP Office Basic Edition - Quick Mode**
  This is the default operating mode for IP500 V2 control units. The exactly behavior is determined by the type of System SD card installed in the unit, see below.
  - **IP Office Basic Edition - Norstar Mode/IP Office Basic Edition - PARTNER® Mode**
    These two modes are sold in particular locales. Functionally they are the same as IP Office Basic Edition - Quick Mode.
- **Server Edition**
  This special mode is not covered by this documentation. Refer to the separate Server Edition documentation. However, the IP500 V2 Expansion System used for Server Edition networks uses an IP500 V2 control unit. Therefore, hardware compatibility notes for the IP500 V2 control unit in this manual remain applicable for Server Edition usage unless stated otherwise.
- **B5800 Branch Gateway**
  This special mode is not covered by this documentation. Refer to the separate B5800 Branch Gateway documentation.

IP500 control units run in IP Office Essential Edition only. The default mode used for IP500 V2 systems is determined by the type of System SD card present when the system is first installed. IP Office Manager can then be used to change the mode of the system.

The different System SD cards are:

- **IP Office U-Law SD Card**
  A system fitted with this type of card will default to U-Law telephony. For pre-IP Office Release 7.0 software, the system will default to IP Office standard mode. For IP Office Release 7.0+, the system will default to IP Office Basic Edition - Quick Mode ***Key System*** operation. Intended for North American locales.
- **IP Office A-Law SD Card**
  A system fitted with this type of card will default to A-Law telephony. For pre-IP Office Release 7.0 software, the system will default to IP Office standard mode. For IP Office Release 7.0+, the system will default to IP Office Basic Edition - Quick Mode ***PBX System*** operation. Intended for locales outside North America.
- **IP Office Partner Edition SD Card**
  A system fitted with this type of card will default to U-Law telephony and IP Office Basic Edition - PARTNER® Mode ***Key System*** operation. Supported only in North American locales.
- **IP Office Norstar Edition SD Card**
  A system fitted with this type of card will default to A-Law telephony and IP Office Basic Edition - Norstar Mode ***Key System*** operation. Supported only in Middle East and North African locales.

An IP500 V2 system can be converted from its current mode to run in IP Office Essential Edition using IP Office Manager. For IP Office Release 8.0 and higher, the system also requires an **Essential Edition** license to run in IP Office Essential Edition. This license is not required in any other modes.

1.1.1 Overall Capacity

The following table is a summary only. The exact combinations of extension, trunk and user ports will also depend on local variations in hardware supported.

		IP Office Basic Edition - PARTNER® Mode	IP Office Basic Edition - Norstar Mode	IP Office Basic Edition - Quick Mode	IP Office Essential Edition
Extensions	Maximum Extensions	100 [1]	100 [1]	100 [1]	384
Trunks	Maximum Trunks	64	64	64	[5]
	- Maximum Analog Trunks	32	32	32	204
	- Maximum BRI Channels [3]	–	12	12	32
	- Maximum PRI Channels [4]	24	30	30	240
	- Maximum SIP Channels [2]	20	20	20	[5]
	- Maximum H323 IP Channels	–	–	–	[5]

1. 100 Extensions in 3-digit extension numbering mode. 48 extensions in 2-digit extension numbering mode.
   - For IP Office Basic Edition - Quick Mode, IP Office Basic Edition - PARTNER® Mode and IP Office Basic Edition - Norstar Mode, the system assumes that the base control unit is always fully populated with up to 32 extensions, either real or phantom or a mix, to which it assigns extension numbers in sequence. It does this before assigning extension numbers to any real extensions on attached external expansion modules up to the system extension limit. If the system extension limit has not been exceeded, any remaining extension numbers are assigned to additional phantom extensions.
2. IP Office Basic Edition - Quick Mode, IP Office Basic Edition - PARTNER® Mode and IP Office Basic Edition - Norstar Mode systems support 3 SIP channels without licenses. Additional channels up to the limit require licenses. IP Office Essential Edition systems require licenses for all channels. In all modes, voice compression hardware resources are also required for SIP support.
3. IP Office Basic Edition - Quick Mode, IP Office Basic Edition - PARTNER® Mode and IP Office Basic Edition - Norstar Mode systems do not support both BRI and PRI trunks in the same system.IP Office Essential Edition systems support both BRI and PRI trunks in the same system. Non-IP Office Essential Edition systems are restricted to 12 BRI channels regardless of the BRI hardware installed.
4. IP Office Basic Edition - Quick Mode, IP Office Basic Edition - PARTNER® Mode and IP Office Basic Edition - Norstar Mode systems are limited to 1 single-port PRI card.
5. Capacity is dependent on licenses, voice compression resources and available bandwidth.

1.1.2 Hardware Support Summary

Note that even where indicated as supported, the availability and support of equipment may still be subject to local restrictions.

	Control Unit		IP Office Basic Edition			IP Office Essential Edition	IP Office Preferred Edition	IP Office Advanced Edition
	IP500	IP500 V2	PARTNER Mode	Norstar Mode	Quick Mode			
IP500 V2 Control Unit	–	✓	✓	✓	✓	✓	✓	✓
IP500 Control Unit	✓	–	–	–	–	✓	✓	✓
IP500 Base Cards								
IP500 Digital Station Card	✓	✓	✓ 3	✓ 3	✓ 3	✓ 3	✓ 3	✓ 3
IP500 Analog Phone 2/8	✓	✓	✓ 4	✓ 4	✓ 4	✓ 4	✓ 4	✓ 4
IP500 TCM8 Card[6]	–	✓	✓ 4	✓ 4	✓ 4	✓ 4	✓ 4	✓ 4
IP500 VCM 32/64 Cards	✓	✓	–	–	–	✓ 2	✓ 2	✓ 2
IP500 Legacy Card Carrier	✓	✓	–	–	–	✓	✓	✓
IP500 4-Port Expansion	✓	✓	–	–	–	✓ 1	✓ 1	✓ 1
IP500 BRI Combo[2][6]	–	✓	–	✓ 2	✓ 2	✓	✓	✓
IP500 ATM Combo[2][6]	–	✓	✓ 2	✓ 2	✓ 2	✓ 2	✓ 2	✓ 2
IP500 ATM Combo V2[2][6]	–	✓	✓ 2	✓ 2	✓ 2	✓ 2	✓ 2	✓ 2
IP500 ETR6[1][6]	–	✓	✓ 3	–	✓ 3	–	–	–
Unified Communications Module[6]	–	✓	–	–	–	✓	✓	✓
Trunk Daughter Cards								
Analog Trunk Card	✓	✓	✓	✓	✓	✓	✓	✓
Analog Trunk Card V2[6]	–	✓	✓	✓	✓	✓	✓	✓
BRI Trunk Cards[4]	✓	✓	–	✓	✓	✓	✓	✓
PRI Trunk Card[4][5]	✓	✓	✓ 1	✓ 1	✓ 1	✓ 4	✓ 4	✓ 4
Expansion Modules								
Number of Modules[3]			8	8	8	12	12	12
Digital Station 16/30	✓	✓	✓	✓	✓	✓	✓	✓
Digital Station 16A/30A	–	✓	✓	✓	✓	✓	✓	✓
Phone 8/16/30	✓	✓	✓	✓	✓	✓	✓	✓
Analog Trunk 16	✓	✓	✓	✓	✓	✓	✓	✓
BRI So8	✓	✓	–	–	–	✓	✓	✓
Telephone Types								
ETR Phones *(ETR ports)*	✓	✓	✓	–	✓	–	–	–
BST Phones *(TCM ports)*	✓	✓	✓	✓	✓	✓	✓	✓
DS Phones *(DS ports)*	✓	✓	✓	✓	✓	✓	✓	✓
H323 IP Phones *(LAN)*	✓	✓	–	–	–	✓	✓	✓
SIP IP Phones *(LAN)*	✓	✓	–	–	–	✓	✓	✓
DECT R4 *(LAN)*	✓	✓				✓	✓	✓
DECT DMS *(TCM ports)*	✓	✓	✓	✓	✓	✓	✓	✓
Voicemail Types								
Embedded Voicemail	✓	✓	✓	✓	✓	✓	✓	✓
Voicemail Pro	✓	✓	–	–	–	✓	✓	✓

Notes

1. The ETR6 card is only supported by IP500 V2 systems in IP Office Basic Edition - PARTNER® Mode or IP Office Basic Edition - Quick Mode U-Law modes.
2. Only 2 combinations cards are supported in a control unit, regardless of combination card type.
3. External expansion modules can be added so long as the overall limit for extensions and trunks is not exceeded. On non-IP Office Essential Edition systems, a maximum of one Analog Trunk 16 module is supported.
4. A mix of BRI and PRI trunks is not supported by IP Office Basic Edition - Norstar Mode and IP Office Basic Edition - Quick Mode.
5. IP Office Basic Edition - PARTNER® Mode, IP Office Basic Edition - Norstar Mode and IP Office Basic Edition - Quick Mode each only support a single-port PRI card.
6. Not supported by IP500. IP500 V2 only.

1.1.3 Feature Support Summary

The table below is a general summary only. For more specific details refer to the installation documentation for the specific application.

		IP Office Basic Edition			IP Office Essential Edition	IP Office Preferred Edition	IP Office Advanced Edition
		PARTNER Mode	Norstar Mode	Quick Mode			
Admin Applications	**Phone Based Admin**	✓	✓	✓	–	–	–
	IP Office Web Manager	✓	✓	✓	–	–	–
	IP Office Manager	✓	✓	✓	✓	✓	✓
	Monitor (System Monitor)	✓	✓	✓	✓	✓	✓
	System Status Application	✓	✓	✓	✓	✓	✓
IP Office Applications	**Customer Call Reporter**	–	–	–	–		✓
	one-X Portal for IP Office	–	–	–	–	✓	✓
	one-X Mobile	–	–	–	–	✓	✓
	Flare Communicator for IP Office	–	–	–	–	✓	✓
	SoftConsole	–	–	–	✓	✓	✓
	IP Office Video Softphone	–	–	–	–	✓	✓
	TAPI (1st Party)	–	–	–	✓	✓	✓
	TAPI (3rd Party)	–	–	–	✓	✓	✓
	Voicemail Pro	–	–	–	–	✓	✓
	ContactStore	–	–	–	–	✓	✓
Locales		Canada, Mexico, United States	Bahrain, Egypt, Kuwait, Morocco, Oman, Pakistan, Qatar, Saudi Arabia, South Africa, Turkey, United Arab Emirates	Argentina, Australia, Bahrain, Belgium, Brazil, Canada, Chile, China, Colombia, Denmark, Egypt, Finland, France, Germany, Greece, Hong Kong, Hungary, Iceland, India, Italy, Korea, Kuwait, Malaysia, Mexico, Morocco, Netherlands, New Zealand, Norway, Oman, Pakistan, Peru, Poland, Portugal, Qatar, Russia, Saudi Arabia, Singapore, South Africa, Spain, Sweden, Switzerland, Taiwan, Turkey, United Arab Emirates, United Kingdom, United States, Venezuela.			
Voicemail Languages	**Embedded Voicemail**	• Arabic, Chinese-Mandarin, Chinese-Cantonese, Danish, Dutch, English-UK, English-US, Finnish, French, French-Canadian, German, Italian, Korean, Norwegian, Portuguese, Portuguese Brazilian, Russian, Swedish, Spanish, Spanish-Latin, Spanish-Argentinean.					
	Voicemail Pro	–	–	–	–	As above plus: Hungarian, Greek, Polish. Minus: Arabic.	
Default Configuration Access	**User Name**	Administrator					
	Password	Administrator					
Default Upgrade Password		Administrator			password		

1.2 IP500 V2 System Components

The following are the typical components of an IP Office system based on an IP500 V2 control unit.

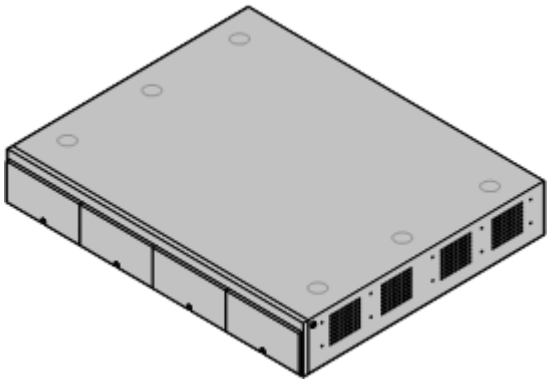

- **IP Office IP500 V2 System Unit** 161
  The control unit holds the main configuration and performs the routing and switching for telephone calls and data traffic. Each control unit includes 4 slots for optional base cards to support trunk and phone extension ports.
  - **Avaya SD Card** 34
    This uniquely numbered dongle is used to validate license keys entered into the system's configuration to enable features. A dongle is mandatory for correct system operation even if no licensed features are being used. IP500 V2 control units use an Avaya SD card which is slotted into the rear of the control unit. This card also provides Embedded Voicemail support and storage for system software files.

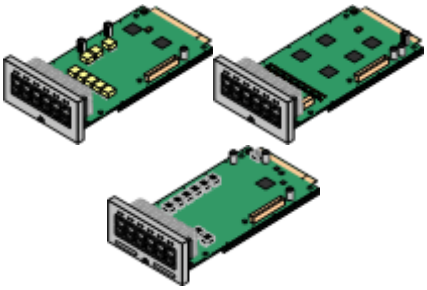

- **IP500 Base Cards** 20
  The IP500 V2 control unit has slots for up to 4 IP500 base cards. These can be used to add ports for analog extensions, digital extensions, voice compression channels and other resources.
  - **IP500 Digital Station Base Card** 171
  - **IP500 Analog Phone Base Card** 166
  - **IP500 TCM8 Base Card** 174
  - **IP500 ETR6 Base Card** 172
  -

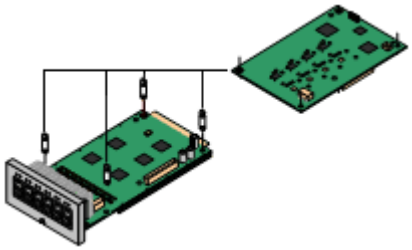

- **IP500 Trunk Daughter Cards** 22
  Many of the IP500 base cards can be fitted with an IP500 daughter card in order to support various types of trunk connections.
  - **IP500 Analog Trunk Card** 176
  - **IP500 Analog Trunk Card V2** 176
  - **IP500 BRI Trunk Card** 178
  - **IP500 PRI Trunk Card** 179

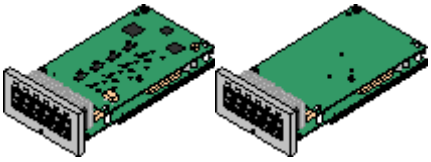

- **IP500 Combination Cards** 20
  These card are pre-paired base and daughter cards. They provide 6 digital station ports, 2 analog phone ports, 10 voice compression channels and either 4 analog trunk ports or 4 BRI channels (2 ports). The trunk daughter card cannot be removed or replaced with another type.
  - **IP500 BRI Combination Card** 170
  - **IP500 ATM Combination Card** 167
  - **IP500 ATM Combination Card V2** 167

VK00nDd15SDvXoxkw9cR9x_jOXr_AWz9

- **License Keys**
  Various IP Office features and applications require a license key to be entered into the system's configuration. Each key is a 32-character text string unique to the feature being activated and the serial number of the Feature Key dongle installed in the system.

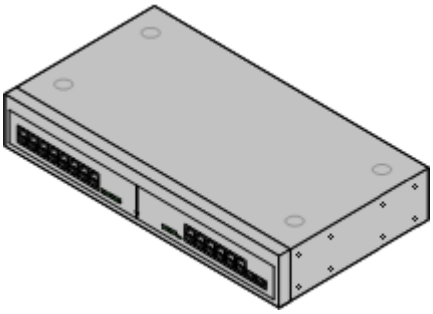

- **IP500 External Expansion Modules** 23
  Additional ports can be added using a number of IP500 external expansion modules.
  - Systems running in IP Office Basic Edition - Quick Mode mode support up to 8 external expansion modules so long as the system extensions limit is not exceeded.

- **Power Supplies** 25
  The IP500 control unit has an internal power supply unit. Each external expansion module is supplied with an external power supply unit. Additional power supply units may also be required for IP phones and some phone add-ons.

- **Power Cords** 26
  Depending on the locale, different power cords need to be ordered for each control unit, external expansion module and any phones or devices using external power supply units.

- **Cables** 28
  The IP Office is designed primarily for connection to a structured cabling system using CAT3 UTP cabling. This approach allows telephone and data traffic to share the same wiring infrastructure and simplifies equipment moves.

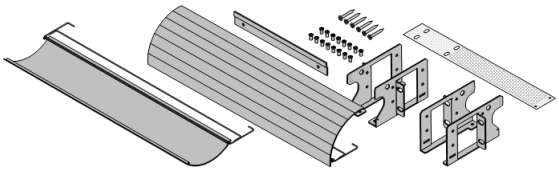

- **Mounting Kits** 32
  The control unit can be used free-standing, with external expansion modules stacked above it. With optional rack mounting kits, the control unit and external expansion modules can also be rack mounted. Alternatively with an optional wall mounting kit the IP500 control unit can be wall mounted. IP500 external expansion modules can also be wall mounted.

- **Surge Protectors and Barrier Boxes** 31
  Where the installation includes extensions in other buildings additional protective equipment is required. This equipment may also be required in areas where the lightning risk is high.

- **Phones** 35
  IP Office systems support a variety of Avaya digital and IP phones plus analog phones.

- **Application DVDs**
  The IP Office applications can be ordered on a number of DVDs. In addition they can be downloaded from the IP Office section of the Avaya support web site (*http://support.avaya.com*).

1.3 Control Unit Cards

1.3.1 IP500 Base Cards

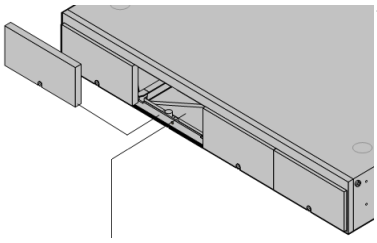

The IP500 and IP500 V2 control units have 4 slots for the insertion of IP500 base cards. The slots are numbered 1 to 4 from left to right. Normally they can be used in any order, however if the capacity for a particular type of card is exceeded, the card in the rightmost slot will be disabled.

Each base card includes an integral front panel with ports for cable connections. Typically the first 8 ports on the left are for connection of extension devices. The 4 ports on the left are used for connection of trunks if a trunk daughter card 22 is added to the base card.

IP500 Digital Station Base Card 171

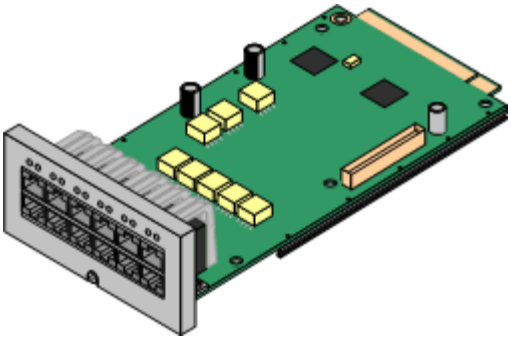

This card provides 8 DS (digital station) ports for the connection of Avaya digital phones.

- The card can be fitted with an IP500 trunk daughter card 22 which uses the base card ports for trunk connection.
- **Maximum:** 3 per control unit.
  - Connections for 4100, 7400, M-Series and T-Series phones use the IP500 TCM8 Digital Station card.

IP500 Analog Phone Base Card 166

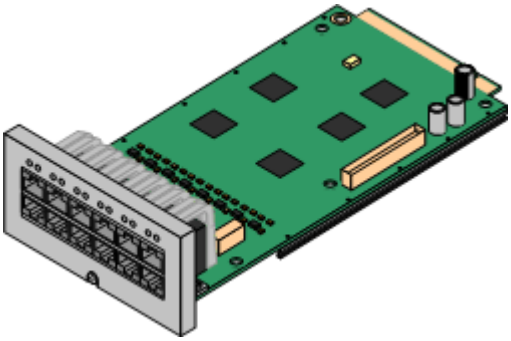

The card is available in two variants, supporting either 2 or 8 analog phone ports.

- The card can be fitted with an IP500 trunk daughter card 22 which uses the base card ports for trunk connection.
- **Maximum:** 4 per control unit.
  - The analog phone ports do not include a ringing capacitor. Where this is a requirement, connection should be via a Master socket containing ringing capacitors.
  - If fitted with an IP500 Analog Trunk daughter card, during power failure phone port 8 is connected to analog trunk port 12.

IP500 TCM8 Digital Station Card 174

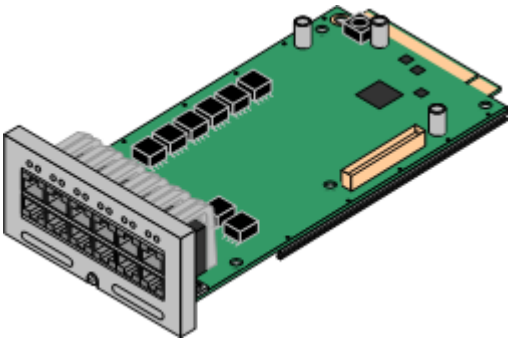

This card provides 8 TCM (digital station) ports for the connection of Avaya 4100, 7400, M-Series and T-Series phones.

- The card can be fitted with an IP500 trunk daughter card 22 which uses the base card ports for trunk connection.
- **Maximum:** 4 per control unit per IP500 V2 control unit.

IP500 BRI Combination Card 170

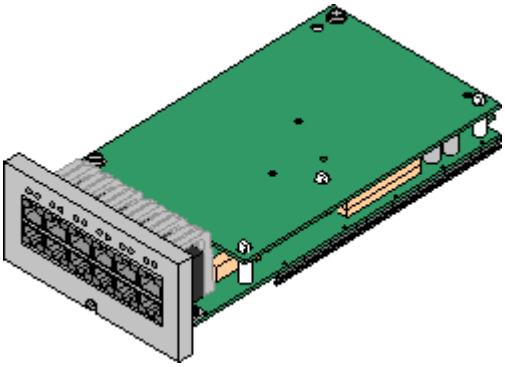

This card provides 6 digital station ports (1-6), 2 analog extension ports (7-8) and 2 BRI trunk ports (9-10, 4 channels). The card also includes 10 voice compression channels.

- This card has a pre-installed IP500 BRI trunk daughter card 22.
- **Maximum:** 2 combination cards per IP500 V2 control unit, regardless of type.
  - IP Office Basic Edition - Quick Mode mode systems are limited to a maximum of 12 BRI channels.

IP500 ATM Combination Card/IP500 ATM Combination Card V2 167

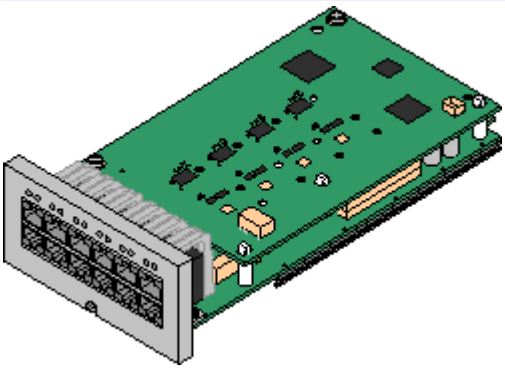

This card provides 6 digital station ports (1-6), 2 analog extension ports (7-8) and 4 analog trunk ports (9-12). The card also includes 10 voice compression channels.

- This card has a pre-installed IP500 analog trunk daughter card 22.
- **Maximum:** 2 combination cards per IP500 V2 control unit, regardless of type.
  - The analog phone ports do not include a ringing capacitor. Where this is a requirement, connection should be via a Master socket containing ringing capacitors.
  - If fitted with an IP500 Analog Trunk daughter card, during power failure phone port 8 is connected to analog trunk port 12.

IP500 ETR6 Base Card 172

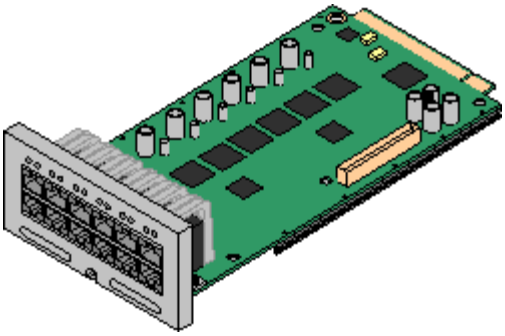

This card is only supported in an IP500 V2 control unit running in IP Office Basic Edition - PARTNER® Mode or IP Office Basic Edition - Quick Mode.

It provides 6 ETR ports for connection of ETR phones. 2 Analog extension ports are also provided for emergency use only with an analog trunk card.

- The card can be fitted with an IP500 trunk daughter card which uses the base card ports for trunk connection.
- **Maximum:** 3 per IP500 V2 control unit.
- The analog phone ports do not include a ringing capacitor. Where this is a requirement, connection should be via a Master socket containing ringing capacitors.
- If fitted with an IP500 Analog Trunk daughter card, during power failure phone ports 7 and 8 are connected to analog trunk port 12. However during normal operation analog phone ports 7 and 8 are not useable.

1.3.2 IP500 Trunk Cards

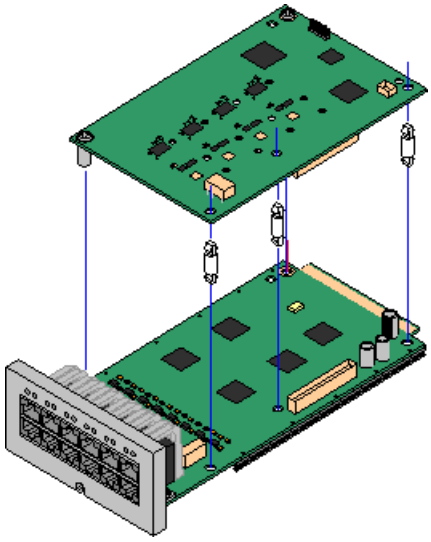

Most IP500 base cards 20 can be fitted with an IP500 trunk daughter cards to support the connection of trunks to the base card.

Each daughter card is supplied with the stand off pillars required for installation and a label to identify the daughter cards presence on the front of the base card after installation.

- IP500 Combination cards are pre-fitted with a trunk daughter card which cannot be removed or changed for another type of trunk daughter card.

IP500 Analog Trunk Card/IP500 Analog Trunk Card V2 176

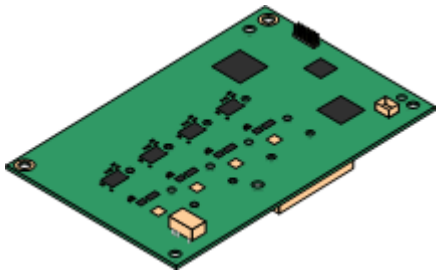

These cards allow the base card to support 4 analog loop-start trunks.

- The analog phone ports do not include a ringing capacitor. Where this is a requirement, connection should be via a Master socket containing ringing capacitors.
- If fitted with an IP500 Analog Trunk daughter card, during power failure phone port 8 is connected to analog trunk port 12.

- **Maximum:** 4 per control unit. The IP500 Analog Trunk Card V2 is only supported in the IP500 V2.

IP500 PRI-U Trunk Card 179

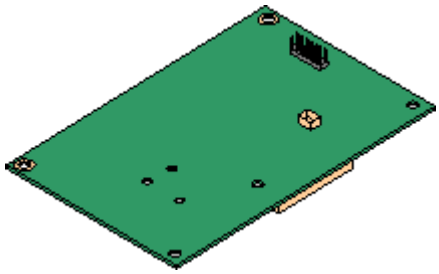

This card allows the base card to support up to 2 PRI trunk connections. The card is available in single and dual port variants. The card can be configured for E1 PRI, T1 robbed bit, T1 PRI or E1R2 PRI trunks.

- **Maximum:** 1 single port card per control unit.
- The IP Office system supports 8 unlicensed B-channels on each IP500 PRI-U port fitted. Additional B-channels, up to the capacity of ports installed and PRI mode selected require **IP500 Universal PRI (Additional Channels)** 248 licenses added to the configuration. These additional channels consume the licenses based on which additional channels are configured as in-service from port 9 of slot 1 upwards. D-channels are not affected by licensing.

IP500 BRI Trunk Card 178

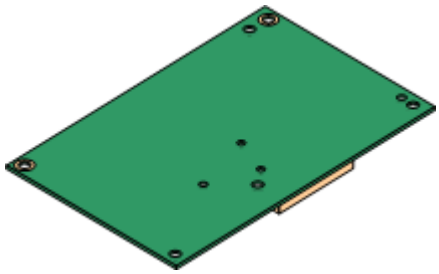

This card allows the base card to support up to 4 BRI trunk connections, each trunk providing 2B+D digital channels. The card is available in 2 port (4 channels) and 4 port (8 channels) variants.

- **Maximum:** 4 per control unit.
  - IP Office Basic Edition - Quick Mode mode systems are limited to a maximum of 12 BRI channels.

1.4 External Expansion Modules

These modules can be used to add additional ports to an IP Office systems. The number of external expansion modules supported depends on the control unit type. Each module uses an external power supply unit 25 supplied with the module. A locale specific power cord 26 for the PSU must be ordered separately.

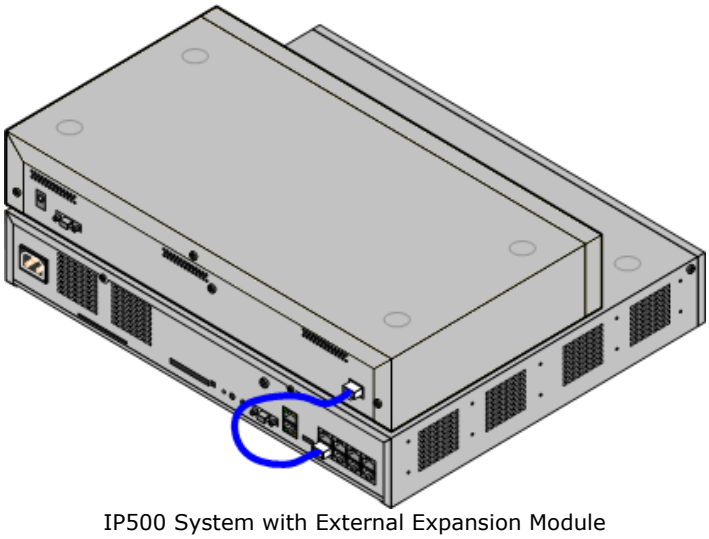

IP500 System with External Expansion Module

- Systems running in IP Office Basic Edition - Quick Mode mode support up to 8 external expansion modules so long as the system extensions limit is not exceeded.
  - Each external expansion module is supplied with a blue 1 meter (3'3'') expansion interconnect cable. This cable must be used when connecting to expansion ports on the rear of a control unit.

IP500 External Expansion Modules

Expansion modules include an external power supply unit (PSU) and a 1m blue interconnect cable. They do not include a locale specific power cord for the external PSU or any phone extension cables.

Variant	Country	SAP Code
Digital Phones (Non-IP)		
IPO 500 Digital Station 16	All	700449499
IPO 500 Digital Station 30	All	700426216
IPO 500 Digital Station 16A (RJ21)	All	700500699
IPO 500 Digital Station 30A (RJ21)	All	700500698
Analog Phones		
IPO 500 Phone 16	All	700449507
IPO 500 Phone 30	All	700426224

Others		
IPO 500 Analog Trunk 16	North America	700449473

1.4.1 IP500 External Expansion Modules

The following IP500 external expansion modules are supported by IP Office Release 8.1. Each module uses an external power supply unit 25 supplied with the module. A locale specific power cord 26 for the PSU must be ordered separately.

The external module can be stacked on top of the control unit. They can also be wall or rack mounted using one of the IP Office mounting kits 194.

- Systems running in IP Office Basic Edition - Quick Mode mode support up to 8 external expansion modules so long as the system extensions limit is not exceeded.

- **IP500 Digital Station Module** 183
  Provides, depending on variant, an additional 16 or 30 DS 235 ports for supported Avaya DS digital phones 35.

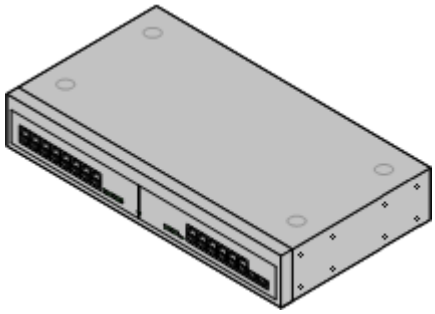

- **IP500 Digital Station A Module** 185
  Provides, depending on variant, an additional 16 or 30 TCM ports for supported Avaya TCM digital phones 35. Supported by IP500 V2 only.

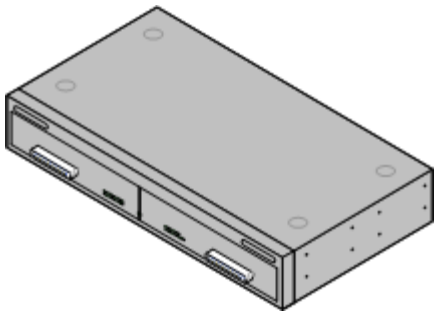

- **IP500 Digital Station B Module** 188
  Provides, depending on variant, an additional 16 or 30 RJ45 ports. For IP Office Release 8.1 Service Pack 9 and higher these modules support DS 235 ports for supported Avaya DS digital phones 35 only.

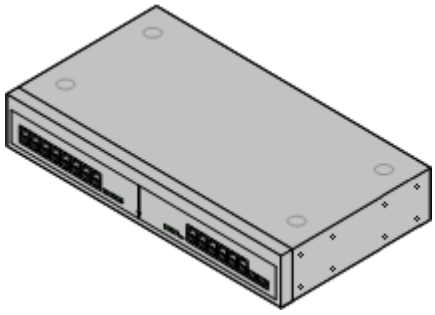

- **IP500 Phone Module** 190
  Provides, depending on variant, an additional 16 or 30 PHONE 241 ports for analog phones.

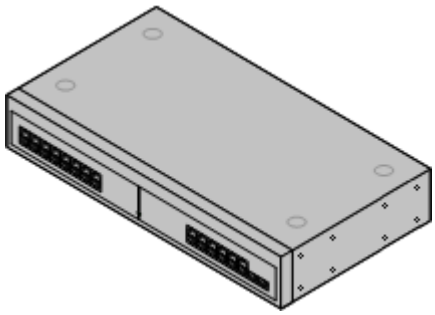

1.5 Power Supplies and Cables

All IP Office control units and external expansion modules either have an internal power supply unit or are supplied with an external power supply unit.

1.5.1 Power Supplies

The IP500 and IP500 V2 control units have an internal power supply unit and so only require a suitable locale specific power cord 26 and a power outlet that includes a switch. Note that if the power cord includes an earth lead, the power outlet must be connected to a protective earth.

External expansion modules are all supplied with an external power supply unit (PSU). These PSUs include an integral 1.5 meter lead for connection to the control unit or expansion module. A power cord 26 for connection from the PSU to the power outlet is not included as this varies by locale. The appropriate power cord must be ordered separately or sourced locally.

Additional power supply units are required for 4450, EU24, XM24 and T3 DSS add-on modules and may also be required for Avaya IP phones.

Area	Type	Used on:	Connector Type
IP Office Control Units and External Expansion Modules	**40W PSU**	Analog, Digital Station V1, Phone V1.	IEC60320 C7 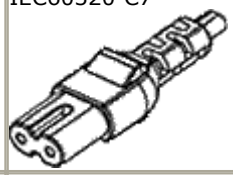
	60W Earthed PSU	IP400 Digital Station V2, IP400 Phone V2, IP400 So8, IP500 Phone 30, IP500 Digital Station 30, IP500 Digital Station 16A, IP500 Digital Station 30A.	IEC60320 C13 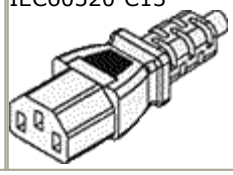

1.5.2 Power Supply Cords

Each control unit and expansion module requires a switched power outlet socket rated at 110-240V ac, 50-60Hz. Connection from that power outlet socket requires an appropriate locale specific power cord which is not supplied with the unit and must be ordered separately. Note that if the power cord includes an earth lead, the power outlet must be connected to a protective earth.

Power cords must not be attached to the building surface or run through walls, ceilings, floors and similar openings. Installation measures must be taken to prevent physical damage to the power supply cord, including proper routing of the power supply cord and provision of a socket outlet near the fixed equipment or positioning of the equipment near a socket outlet.

For locales not detailed below an appropriate power cord must be obtained locally.

Power Cord Type	Power Outlet Plug Type	Locales	SAP Codes
Earthed Power Cords (IEC60320 C13) 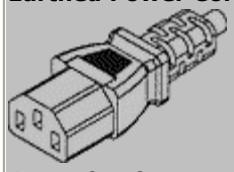 **Control Units** • IP500 V2. • IP500. **IP400 External Expansion Modules** • Digital Station V2. • Phone V2. **IP500 External Expansion Modules** • BRI So8. • Digital Station 16/30. • Phone 16/30.	**CEE7/7 (Schuko)** 	Europe and South Africa.	700289762
	BS1363 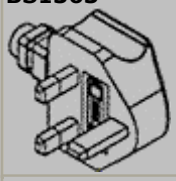	Czech Republic, Ireland, United Kingdom.	700289747
	NEMA5-15P / CS22.2 No.42 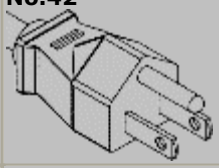	North, Central and South America.	700289770
Unearthed Power Cord (IEC60320 C7) 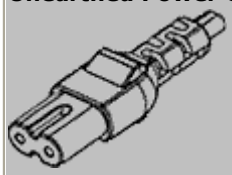 **IP400 External Expansion Modules** • Analog. • Digital Station V1. • Phone V1. **IP500 External Expansion Modules** • Analog Trunk 16.	**CEE7/16 (Europlug)** 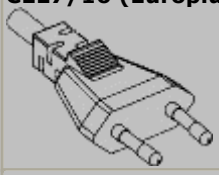	Europe and South Africa.	700213382
	BS1363 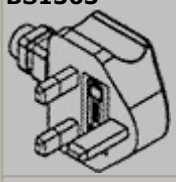	Czech Republic, Ireland, United Kingdom.	700213374
	NEMA1-15 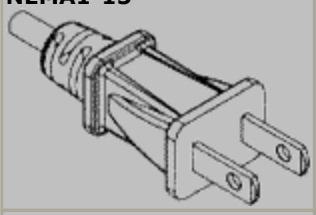	North, Central and South America.	700213390
		Korea.	700254519

*Older units were supplied with a 40W unearthed PSU and required an IEC60320 C7 power cord.

1.5.3 Power Supply Backup

The use of an Uninterrupted Power Supply (UPS) with any telephone system is strongly recommended. Even at sites that rarely lose electrical power, that power may occasionally have to be switched off for maintenance of other equipment. In addition, most UPSs also provide an element of power conditioning, reducing spikes and surges.

The capacity of UPS systems and the total equipment load the UPS is expected to support are usually quoted in VA. Where equipment load is quoted in Watts, multiply by 1.4 to get the VA load.

The calculation of how much UPS capacity is required depends on several choices.

- **What equipment to place on the UPS?**
  Remember to include server PCs such as the voicemail. It is recommended that the total load on a new UPS is never greater than 75% capacity, thus allowing for future equipment.
- **How many minutes of UPS support is required?**
  Actual UPS runtime is variable, it depends on what percentage of the UPS capacity the total equipment load represents. For example, a 1000VA capacity UPS may only support a 1000VA (100%) load for 5 minutes. This relationship is not linear, the same UPS may support a 500VA (50%) load for 16 minutes. Therefore, the lower the percentage of maximum capacity used, the increasingly longer the UPS runtime, for example up to 8 hours.
- **How frequent are the power loses?**
  You also need to include allowance for the UPS recharge time. For most UPS's the ratio of discharge to full recharge time is 1:10.
- **How many output sockets does the UPS provide?**
  Multiple UPS units may be required to ensure that every item of supported equipment has its own supply socket.

Example Values

The dominate factor in the power consumption of an IP Office system is the telephones attached to the control unit and any external expansion modules. This does not include IP telephones which require their own separate power supplies. If any server PCs are being used by the system, the requirements of those PCs should also be included in the assessment. Similarly support for adjunct systems such as DECT should be considered.

The following are worst case figures tested found using fully populated control units and external expansion modules:

- **IP500 V2 Control Unit:** 115W.
- **IP500 Digital Station 16 External Expansion Module:** 31W.
- **IP500 Digital Station 30 External Expansion Module:** 56W.
- **IP500 DS16A Digital Station RJ21 External Expansion Module:** 34W.
- **IP500 DS30A Digital Station RJ21 External Expansion Module:** 60W.
- **IP500 Phone 16 External Expansion Module:** 25W.
- **IP500 Phone 30 External Expansion Module:** 45W.
- **IP500 Analog Trunk Module 16 External Expansion Module:** 8.8W.

1.5.4 Cabling and Cables

The IP Office systems are designed primarily for use within an RJ45 structured cabling system using CAT3 unshielded twisted-pair (UTP) cabling and RJ45 sockets.

A structured cabling system is one where cables are run from a central RJ45 patch panel in the communications/data room to individual RJ45 sockets at user locations. All wires in each cable between the patch panel and the desk socket are connected straight through. This arrangement allows devices connected at the patch panel to be swapped to match the type of device that needs to be connected at the user socket. For example, making one user socket a phone port and another user socket a computer LAN port, without requiring any rewiring of the cables between the patch panel and the user location.

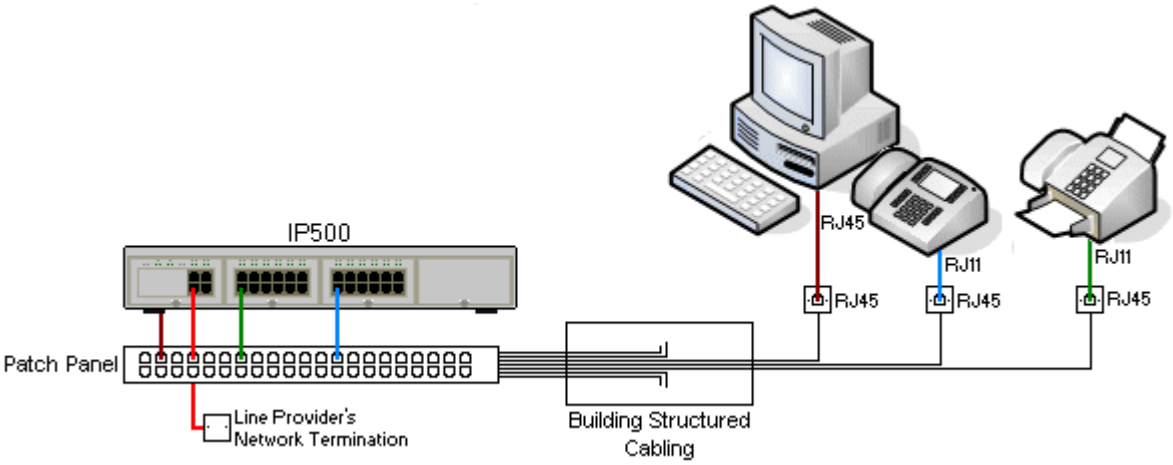

- **Traditional IDC Punchdown Wiring Installations**
  Where necessary, the far end RJ45 plug can be stripped from IP Office cables and wired into traditional wiring systems using punch-block connectors. This type of installation should be performed by an experienced wiring technician.

- **Trunk Connections**
  The majority of IP Office trunk ports use RJ45 connectors for acceptance of an RJ45-to-RJ45 cable. However, connection at the line provider's end may require use of a different plug type in order to match the line providers equipment.

- **RJ11 Phone Connectors**
  Many phones use RJ11 sockets and are supplied with RJ11-to-RJ11 cables. RJ11 plugs can be inserted into RJ45 sockets and in many case the connection will work. However this is not recommended or supported as the connection lock is not truly positive and may become disconnected. An RJ45-to-RJ11 cable 235 is available for these connections.

Standard IP Office Cables

The following are Avaya standard cables available for use with IP Office systems. The maximum length is applicable if the standard Avaya cable is replaced with an alternate cable.

Cable	Description	SAP Code	Standard Length	Maximum Length
9-Way DTE Cable 132	Connects to control unit RS232 DTE port. 9-Way D-type plug to 9-way D-type socket.	–	2m/6'6''.	2m/6'6''.
Structured Cabling DS Line Cable 235	Connects from RJ45 sockets to RJ11 socketed DS and analog phones.	TT700047871	4m/13'2''.	See table below.
BRI/PRI Trunk Cable 234	Connects BRI/PRI trunk ports to the line provider's network termination point. RJ45 to RJ45. Red.	700213440	3m/9'10''.	–
Expansion Interconnect Cable 238	Connects the control unit to expansion modules. RJ45 to RJ45. Blue.	700213457	1m/3'3''.	1m/3'3''.
LAN Cable 239	Connects from IP Office LAN ports to IP devices. RJ45 to RJ45. Grey.	700213481	3m/9'10''.	100m/328'.

The table below details the maximum total cable distances for DS and analog extensions using different cable types.

Telephone	Unshielded Twisted-Pair (UTP) - 50nf/Km			CW1308
	AWG22 (0.65mm)	AWG24 (0.5mm)	AWG26 (0.4mm)	
1400 Series	1200m/3937'.	1000m/3280'.	670m/2200'.	400m/1310'.
9500 Series	1200m/3937'.	1000m/3280'.	670m/2200'.	400m/1310'.
TCM (without power booster)	–	305m/1000'	–	–
" (with power booster)	–	790m/2600'	–	–
Analog Phones	1000m/3280'.	1000m/ 3280'.	400m/1640'.	800m/2620'.

1.5.5 Grounding

All IP Office control units and external expansion modules must be connected to a functional ground. Where the unit is connected to a power outlet using a power cord with an earth lead, the power outlet must be connected to a protective earth.

Use of ground connections reduces the likelihood of problems in most telephony and data systems. This is especially important in buildings where multiple items of equipment are interconnected using long cable runs, for example phone and data networks.

In some cases, such as ground start trunks, in addition to being a protective measure, this is a functional requirement for the equipment to operate. In other cases it may be a locale regulatory requirement and or a necessary protective step, for example areas of high lightning risk.

- ⚠ **WARNING**
  During installation do not assume that ground points are correctly connected to ground. Test ground points before relying on them to ground connected equipment.

The ground point on IP Office control units and external expansion modules are marked with a ⏚ or ⏚ symbol. Ground connections to these points should use a 14 AWG solid wire with either a green sleeve for a functional ground or green and yellow sleeve for a protective ground.

- **Additional protective equipment**
  In addition to grounding, additional protective equipment will be required in the following situations. Refer to "Out of Building Telephone Installations 31".
  - On any Digital Station or Phones external expansion module connected to an extension located in another building.
  - In the Republic of South Africa, on all Analog Trunk external expansion modules (ATM16) and on any control units containing an analog trunk cards (ATM4/ATM4U).

1.5.6 Lightning Protection/Out-of-Building Connections

The following are the only supported scenarios in which wired extensions and devices outside the main building can be connected to the IP Office system. In these scenarios, additional protection, in the form of protective grounding and surge protectors, must be fitted.

- **WARNING**
  The fitting of additional protection does not remove the risk of damage. It merely reduces the chances of damage.

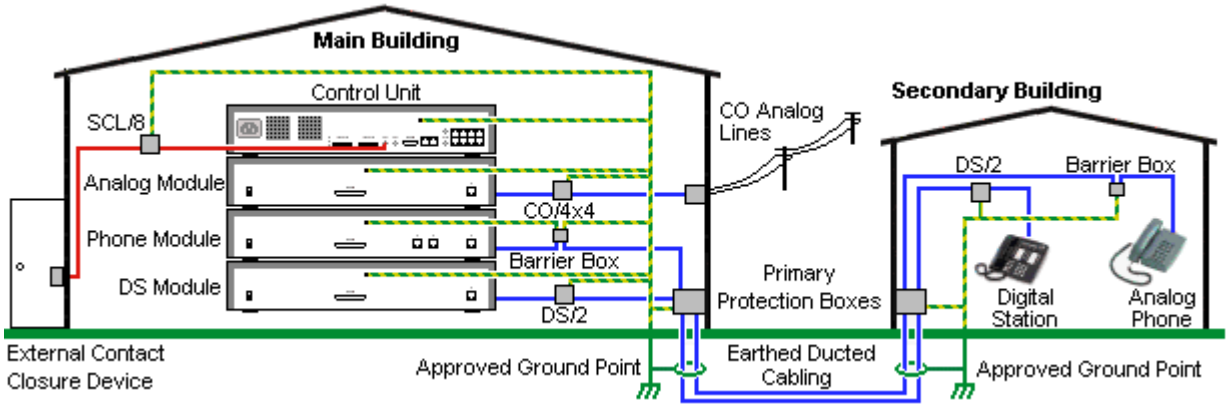

- Cables of different types, for example trunk lines, phone extensions, ground and power connections, should be kept separate.
- All cabling between buildings should be enclosed in grounded ducting. Ideally this ducting should be buried.
- A Primary Protection Box must be provided at the point where the cables enter the building. This should be three point protection (tip, ring and ground). Typically this would be gas tube protection provided by the local telephone company. The ground wire must be thick enough to handle all the lines being affected by indirect strike at the same time.

Connection Type	Protection Device Type	Requirement
Analog Phone Extensions Phones External expansion module (POT 241 or PHONE 241) ports only.	**IP Office Barrier Box** 128 Supports a single connection. Maximum of 16 on any expansion module.	• Connection from the expansion module to the phone must be via a surge protector at each end and via the primary protection point in each building. • The IP Office external expansion modules, control unit and IROB devices must be connected to the protective ground point in their building. • The between building connection must be via earthed ducting, preferable underground. The cable must not be exposed externally at any point.
DS Phone Extensions	**ITWLinx towerMAX DS/2** 127 Supports up to 4 connections. This device was previously referred to as the Avaya 146E.	
TCM Phone Extensions	None	Currently not supported.
Analog Trunks	**ITWLinx towerMAX CO/4x4** 127 Supports up to 4 two-wire lines. This device was previously referred to as the Avaya 146C.	For installations in the Republic of South Africa, the fitting of surge protection on analog trunks is a requirement. For other locations where the risk of lightning strikes is felt to be high, additional protection of incoming analog trunks is recommended.
External Output Switch	**ITWLinx towerMAX SCL/8** This device was previously referred to as the Avaya 146G.	Connections from an IP Office Ext O/P port to an external relay device must be via a surge protector.

The towerMAX range of devices are supplied by ITWLinx (http://www.itwlinx.com).

1.6 Wall and Rack Mounting

All the IP Office control units are designed to be free-standing. On systems with external expansion modules, the control unit and modules are intended to be stacked.

Using additional option mounting kits, some systems can be wall or rack mounted.

Control/Expansion Unit	Wall Mount	Rack Mount
IP500 V2 Control Unit	✓	✓
IP500 External Expansion Modules	✓	✓

Wall Mounting

IP500, IP500 V2 control units and IP500 external expansion modules can be wall mounted. To do this, a wall mounting kit is required in addition to suitable wall fixings. Wall mounting is not supported for IP400 external expansion modules.

In addition to the existing environmental requirements 42 for an IP Office system, the following additional requirements apply when wall mounting a unit:

- The wall surface must be vertical, flat and vibration free. Attachment to temporary walls is not supported.
- Only the screws provided with the mounting kit should used to attach the brackets to the control unit.

The following wall mounting kits exist.

- **IPO IP500 RACK MNTG KIT V3** *(SAP Code 700503160)*
  IPO IP500 RACK MNTG KIT V2 *(SAP Code 700500923)*
  These kits can be used for wall and rack mounting of an IP500 or IP500 V2 control unit and IP500 external expansion modules. The kits incorporates cable routing at the front and rear of the unit. For wall mounted control units it allows orientation of the control unit base card slots to the left or to the right.

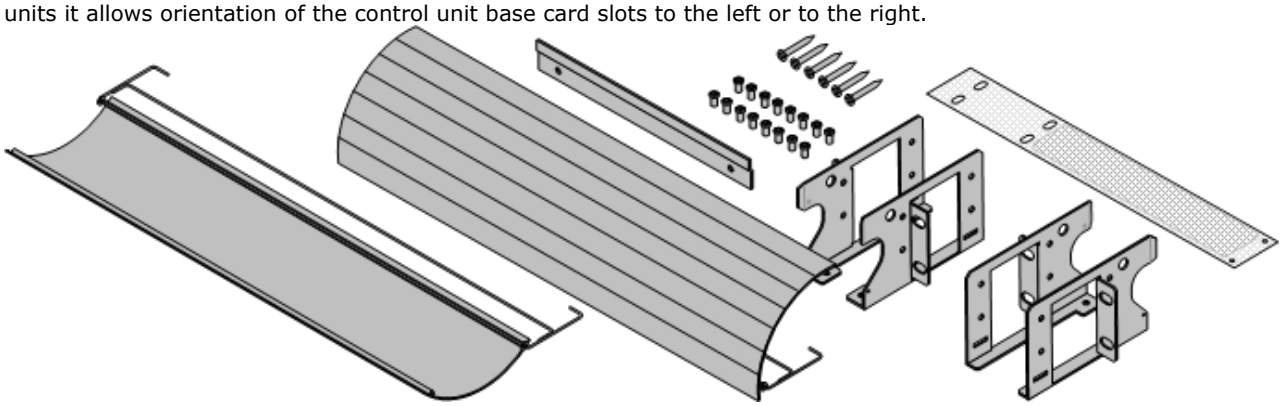

- **IPO IP500 WALL MNTG KIT** *(SAP Code 700430150)*
  This old design of wall mounting kit can be used for wall mounting an IP500 or IP500 V2 control units only. It does not provide any cable routing and requires the control unit to be mounted with the base card slots to the right only.

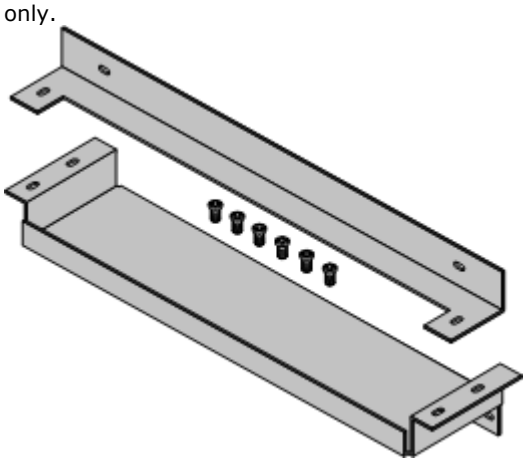

Rack Mounting

All IP Office control units and external expansion modules can be rack mounted into standard 19" rack systems. Each unit requires a 2U slot space within the rack. Rack mounting requires an IP400 or IPO IP500 RACK MNTG KIT for each control unit and external expansion module.

Where IP Office systems are being rack mounted, the effect of conditions within the rack cabinet must be considered. For example the rack temperature may be above the room temperature and airflow within the rack will be restricted. The environmental requirements 42 for the individual IP Office units are still applicable inside the rack cabinet.

Note that the new IPO IP500 RACK MNTG KIT V2 can also be used for rack mounting of units.

IPO IP500 RACK MNTG KIT

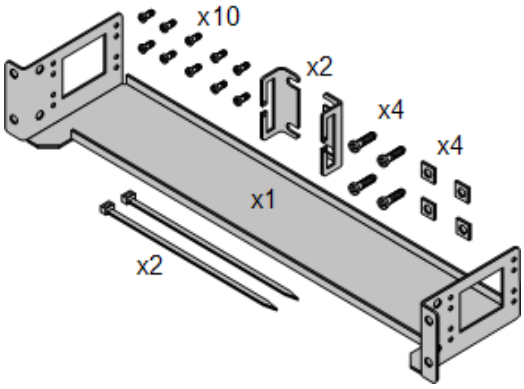

- **IPO IP500 RACK MNTG KIT** *(SAP 700429202)*
  This kit contains all the components required for the rack mounting of a single IP500 V2 control unit, IP500 control unit or IP500 external expansion module. This includes screws for fixing of the brackets to the module, bolts for securing the module in the rack and cable tidy brackets.

IP400 Rack Mounting Kit

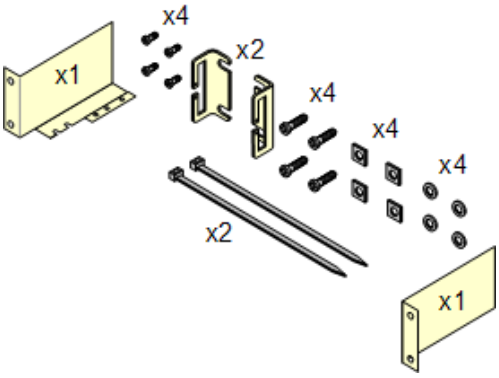

- **IP400 Rack Mounting Kit** *(SAP 700210800)*
  This kit contains all the components required for the rack mounting of a single control unit or expansion module. This includes screws for fixing of the brackets to the module and bolts for securing the module in the rack.

Barrier Box Rack Mounting Kit

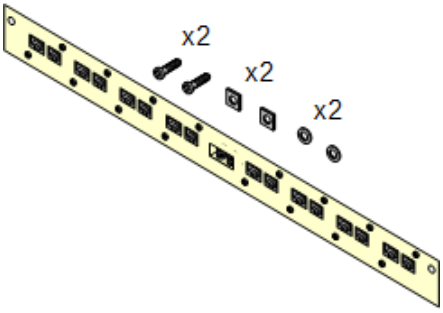

- **Barrier Box Rack Mounting Kit** *(SAP 700293905)*
  Barrier boxes must be used for out-of-building analog phone extensions 31. This bracket allows up to 8 IP Office barrier boxes to be rack mounted and simplifies the number of connections to the protective ground point in the rack. This kit must be used when more than 3 barrier boxes are in use and supports a maximum of 16 barrier boxes for a single external expansion module.

1.7 Feature Keys and Licenses

A feature key is required for licensed features.

- **IP500 V2 Avaya SD Card** 192
  Inserts into the System slot on the rear of an IP500 V2 control unit. This card is required even if not using any IP Office licenses.

Various IP Office features and applications require entry of licenses 245 into the system's configuration. The licenses are unique 32-character codes based on the feature being activated and the serial number of the feature key dongle 192 installed with the IP Office system.

The serial number is printed on the feature key dongle and prefixed with **FK**. It can also be viewed in the system configuration using IP Office Manager.

- For IP500 V2 systems, the feature key dongle takes the form of an SD card inserted into the control unit. The card is a mandatory item for these systems even if they use no licensed features.

When a license is entered into the IP Office configuration, the following information is shown.

- **Status**
  The status, which is ***Unknown*** until the configuration file is sent back to the IP Office system.
  - ***Unknown***
    This status is shown for licenses that have just been added to the configuration shown in IP Office Manager. Once the configuration has been sent back to the IP Office and then reloaded, the status will change to one of those below.
  - ***Valid***
    The features licensed can be configured and used.
  - ***Invalid***
    The license was not recognized. It did not match the serial number of the Feature Key.
  - ***Dormant***
    The license is valid but is conditional on some other pre-requisite that is not currently meet.
  - ***Obsolete***
    The license is valid but is one no longer used by the level of software running on the system.
  - ***Expired***
    The license has gone past its expiry date.
- **License**
  The name of the licensed feature. This may differ from the ordered RFA name.
- **Instances**
  Depending on the license, this may be the number of ports enabled or number of simultaneous users of the licensed feature. Sometime the number of instances is specified in the license name.
- **Expires**
  Most purchased licenses have no expiry setting. For some features, trial licenses may be available which will have an expiry date.

1.8 IP Office Phones

IP Office Release 8.1 supports the following phones and phone add-ons. Availability may depend on location and may be subject to local restrictions.

Enhanced Tip and Ring (ETR Port)

These phones are only supported on an ETR6 card in a IP500 V2 systems. They are only supported in IP Office Basic Edition - PARTNER® Mode and IP Office Basic Edition - Quick Mode systems running a North American locale. They are not supported in IP Office Basic Edition - Norstar Mode and IP Office Essential Edition and on any system running A-Law companding.

- **ETR Series:** ETR6 205, ETR6D 205, ETR18 206, ETR18D 206, ETR34D 207 *(ETR 34D phones are limited to a maximum of 2 per card and 4 in total)*
- **PARTNER DECT:** 3910 201, 3920 201

Digital Station (DS Port)

These digital stations connect to the IP Office via DS 235 ports. They are supported by all IP Office modes.

- **1400 Series:** 1403 198, 1408 199, 1416 200
- **9500 Series:** 9504 202, 9508 203

Digital Station (TCM Port)

These digital stations connect to the IP500 V2 IP Office system via TCM ports. The following are supported in IP Office Basic Edition - Quick Mode mode.

- **4100 Series:** 4135, 4136, 4145, 4145EX, 4146, 4146EX - Connection to IP Office TCM ports via a Digital Mobility Solution 221 system.
- **7400 Series:** 7420, 7430, 7434, 7439, 7440, 7444, 7449 - Connection to IP Office TCM ports via a Digital Mobility Solution 221 system.
- **ACU:** Audio Conferencing Unit 204
- **M-Series:** MT7100 208, MT7100N 208, MT7208 209, MT7208N 209, M7310 210, M7310N 210, M7324 211, M7324N 211.
- **T-Series:** T7000 212, T7100 212, T7208 213, T7316 214, T7316E 215, T7406 216, T7406E 216

Analog Telephones

Analog phones and devices connect to PHONE 241 ports with the IP Office system. However due to the variety of analog phones and device available no guarantee of operation is given. It is the responsibility of the IP Office installer and maintainer to test and verify the operation of proposed analog equipment. Analog message waiting indication (MWI) is only supported with Avaya 6200 Series phones.

- **6200 Series:** 6211, 6219, 6221 *(North America)*.
- **B100 Series:** B149, B159.
- **Interquartz Gemini:** 9330-AV, 9335-AV, 9281-AV *(Europe, Middle East, Africa, Asia-Pacific)*.

1.9 SIP Trunks

The IP Office Basic Edition - Quick Mode mode can support SIP trunks through its LAN connection. These are configured using IP Office Manager, they cannot be managed through phone based administration.

In order to support SIP trunks, the system must include the following resources:

- **SIP Trunk Licenses**
  These licenses are used to configure the number of simultaneous SIP trunk calls supported, up to a maximum of 20. A IP Office Basic Edition - Quick Mode mode system supports 3 channels without licenses.
- **Voice Compression Channels**
  These are required to convert between the audio compression methods used for IP telephony and those used for analog and digital trunks. Each IP500 Combination card, up to a maximum of 2 cards, installed in the system provides 10 voice compression channels for the system. One voice compression channel is used for each SIP call.

1.10 Supported Country Locales

When a new or defaulted system's configuration is first opened in Manager, the value set in the **Locale** field should always be checked and changed if necessary. The system's locale sets factors such as the default ringing patterns and caller display settings. The locale also controls the language that a voicemail server will use for prompts.

The locales supported in IP Office Basic Edition - Quick Mode are:

- ***Argentina***
- ***Australia***
- ***Bahrain***
- ***Belgium***
- ***Brazil***
- ***Canada***
- ***Chile***
- ***China***
- ***Colombia***
- ***Denmark***
- ***Egypt***
- ***Finland***
- ***France***
- ***Germany***
- ***Greece***
- ***Hong Kong***
- ***Hungary***
- ***Iceland***
- ***Ireland***
- ***India***
- ***Italy***
- ***Japan***
- ***Korea***
- ***Kuwait***
- ***Malaysia***
- ***Mexico***
- ***Morocco***
- ***Netherlands***
- ***New Zealand***
- ***Norway***
- ***Oman***
- ***Pakistan***
- ***Peru***
- ***Poland***
- ***Portugal***
- ***Qatar***
- ***Russia***
- ***Saudi Arabia***
- ***Singapore***
- ***South Africa***
- ***Spain***
- ***Sweden***
- ***Switzerland***
- ***Taiwan***
- ***Turkey***
- ***United Arab Emirates***
- ***United Kingdom***
- ***United States***
- ***Venezuela***

1.11 Training

Avaya University provides a wide range of training courses for IP Office and its associated applications. This includes courses necessary for IP Office resellers to become Avaya Authorized Channel Partners and for individuals to achieve IP Office certification.

Details of courses can be found on the Avaya University web site (http://www.avaya-learning.com). The site can be used to check course availability and to book course. It also includes on-line courses and on-line course assessments. The site requires users to setup a user name and password in order to track their personal training record.

1.12 Web Sites

Information to support the IP Office can be found on a number of web sites.

- **Avaya** *(http://www.avaya.com)*
  The official web site for Avaya. The front page also provides access to individual Avaya web sites for different countries.
- **Avaya Enterprise Portal** *(http://partner.avaya.com)*
  This is the official web site for all Avaya Business Partners. The site requires registration for a user name and password. Once accessed, the site portal can be individually customized for what products and information types you wish to see and to be notified about by email.
- **Avaya Support** *(http://support.avaya.com)*
  Contains documentation and other support materials for Avaya products including IP Office. Copies of the IP Office CD images are available from this site and updated core software .bin files.
- **Avaya IP Office Knowledge Base** *(http://marketingtools.avaya.com/knowledgebase)*
  Access to an on-line regularly updated version of the IP Office Knowledge Base.
- **Avaya University** *(http://www.avaya-learning.com)*
  This site provides access to the full range of Avaya training courses. That includes both on-line courses, course assessments and access to details of classroom based courses. The site requires users to register in order to provide the user with access to details of their training record.
- **Avaya Community** *(http://www.aucommunity.com)*
  This is the official discussion forum for Avaya product users. However it does not include any separate area for discussion of IP Office issues.
- **Other Non-Avaya Web Sites**
  A number of third-party web forums exist that discuss IP Office. These can act as useful source of information about how the IP Office is used. Some of these forums require you to be a member and to register. These are not official Avaya forums and their content is not monitored or sanctioned by Avaya.
  - **Tek-Tips** *(http://www.tek-tips.com)*
  - **IP Office Info** *(http://www.ipofficeinfo.com)*
  - **Yahoo Groups** *(http://groups.yahoo.com/group/ipoffice)*
  - **PBX Tech** *(http://www.pbxtech.info/forumdisplay.php?f=8)*

1.13 Emergency and Power Failure Ports

IP Office systems can provide 2 types of analog extension power failure ports. These are:

Type	Description	Provided By:
Switching Power Failure Ports	During normal IP Office operation these ports can be used for normal analog phone connection. During power failure the port is directly connected to an analog trunk port.	• **IP500 Analog Phone 8 Card** When an IP500 Analog Phone 8 base card is fitted with an IP500 Analog Trunk daughter card, during power failure extension port 8 is connected to analog trunk port 12. • **IP500 ATM Combination Card/IP500 ATM Combination Card V2** On this card, during power failure, extension port 8 is connected to analog trunk port 12.
Emergency Only Power Failure Ports	During normal IP Office operation these ports cannot be used. During power failure the port is directly connected to an analog trunk port.	• **IP500 Analog Trunk Daughter Card/ IP500 Analog Trunk Daughter Card V2** Regardless of the IP500 card hosting it, during power failure pins 4 and 5 of port 12 are connected to pins 7 and 8. • **IP400 ATM16 External Expansion Module** This external expansion module has two ports, PF1 and PF2, on its rear. During power fail conditions, PF1 is internally connected to ANALOG port 1 on the module, PF2 is internally connected to ANALOG port 2 on the same module. • **IP500 ETR6 Card** On this card, during normal operation extension ports 7 and 8 are not useable. However, if the card is fitted with an IP500 Analog Trunk daughter card, during power failure extension ports 7 and 8 are connected to analog trunk port 12.

In all cases these only work with loop-start analog trunks. Any phones connected to these ports should be clearly labeled as power fail extensions in accordance with the appropriate national and local regulatory requirements.

Chapter 2.
Installation Requirements

2. Installation Requirements

2.1 Environmental Requirements

The planned location must meet the following requirements. If being installed into a rack system, these are requirements for within the rack:

1. ☐ Temperature: 5°C to 40°C / 40°F to 104°F.
2. ☐ Humidity: 10% to 95% non-condensing.
3. ☐ Check there are no flammable materials in the area.
4. ☐ Check there is no possibility of flooding.
5. ☐ Check that no other machinery or equipment needs to be moved first.
6. ☐ Check that it is not an excessively dusty atmosphere.
7. ☐ Check that the area is unlikely to suffer rapid changes in temperature and humidity.
8. ☐ Check for the proximity of strong magnetic fields, sources of radio frequency and other electrical interference.
9. ☐ Check there are no corrosive chemicals or gasses.
10. ☐ Check there is no excessive vibration or potential of excessive vibration, especially of any mounting surface.
11. ☐ Check that where telephones are installed in another building, that the appropriate protectors and protective grounds are fitted (see Out of Building Telephone Installation 31).
12. ☐ Check there is suitable lighting for installation, system programming and future maintenance.
13. ☐ Check that there is sufficient working space for installation and future maintenance.
14. ☐ Ensure that likely activities near the system will not cause any problems, e.g. access to and maintenance of any other equipment in the area.
15. ☐ Where ventilation holes are present on any of the IP Office units, those holes should not be covered or blocked.
16. ☐ The surface must be flat horizontal for free-standing or rack mounted installations.

Wall Mounting

In additional to the requirements above, the following are applicable to IP Office units that support wall mounting.

1. Units must only be mounted onto permanent wall surfaces.
2. The surface must be vertical and flat.
3. Orientation of the unit must be as shown in the section on IP500 Wall Mounting 67.
4. The appropriate Avaya wall mounting kits must be used.

IMPORTANT SAFETY INSTRUCTIONS

When using your telephone equipment, basic safety precautions should always be followed to reduce the risk of fire, electric shock and injury to persons, including the following:

1. Do not use this product near water, for example, near a bath tub, wash bowl, kitchen sink or laundry tub, in a wet basement or near a swimming pool.
2. Avoid using a telephone (other than a cordless type) during an electrical storm. There may be a remote risk of electric shock from lightning.
3. Do not use the telephone to report a gas leak in the vicinity of the leak.
4. Use only the power cord and batteries indicated in this manual.

2.2 Space Requirements

IP Office control units and modules are designed to be installed either in a free-standing stack or into a 19" rack system. Rack installation requires a rack mounting kit 32 for each control unit and expansion module.

- **Cable Clearance**
  Clearance must be provided at the front and rear of all modules for cable access and feature key dongle connection.
  - On IP400 systems, allow a minimum clearance of 75mm (3 inches).
  - On IP500 and IP500 V2 systems allow a minimum clearance of 90mm (3.5 inches).
- **Additional Clearance**
  Care should be taken to ensure that the positioning of the modules does not interrupt air flow and other factors that may affect environmental requirements 42. This is especially important on IP500 and IP500 V2 control units which have ventilation slots at the side.
- **Cable Access**
  Power cords must not be attached to the building surface or run through walls, ceilings, floors and similar openings. Installation measures must be taken to prevent physical damage to the power supply cord, including proper routing of the power supply cord and provision of a socket outlet near the fixed equipment or positioning of the equipment near a socket outlet.

2.2.1 IP500 and IP500 V2 Control Units

The ventilation slots on the rear and sides should not be covered or blocked.

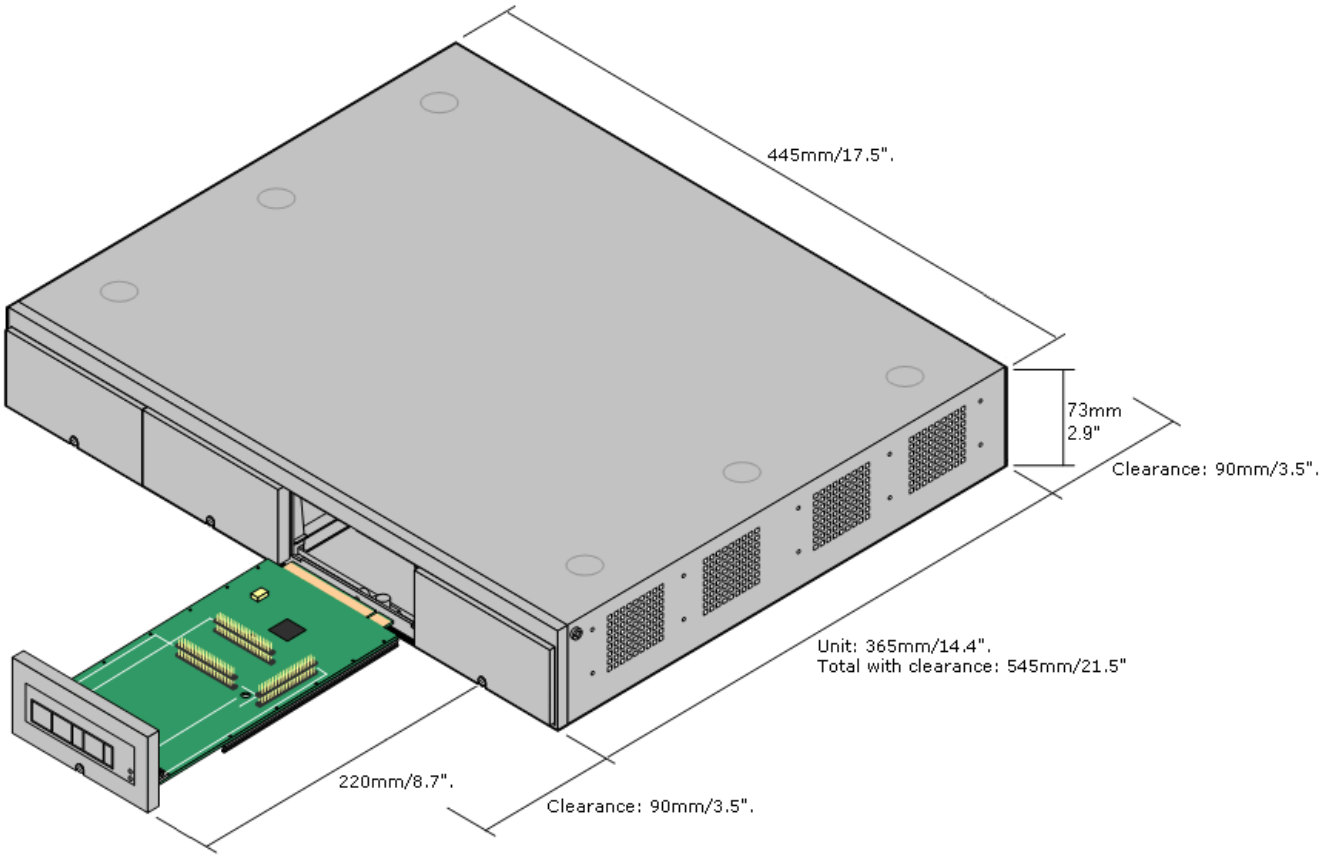

2.2.2 External Expansion Modules

The dimensions below are applicable to all IP Office external expansion modules.

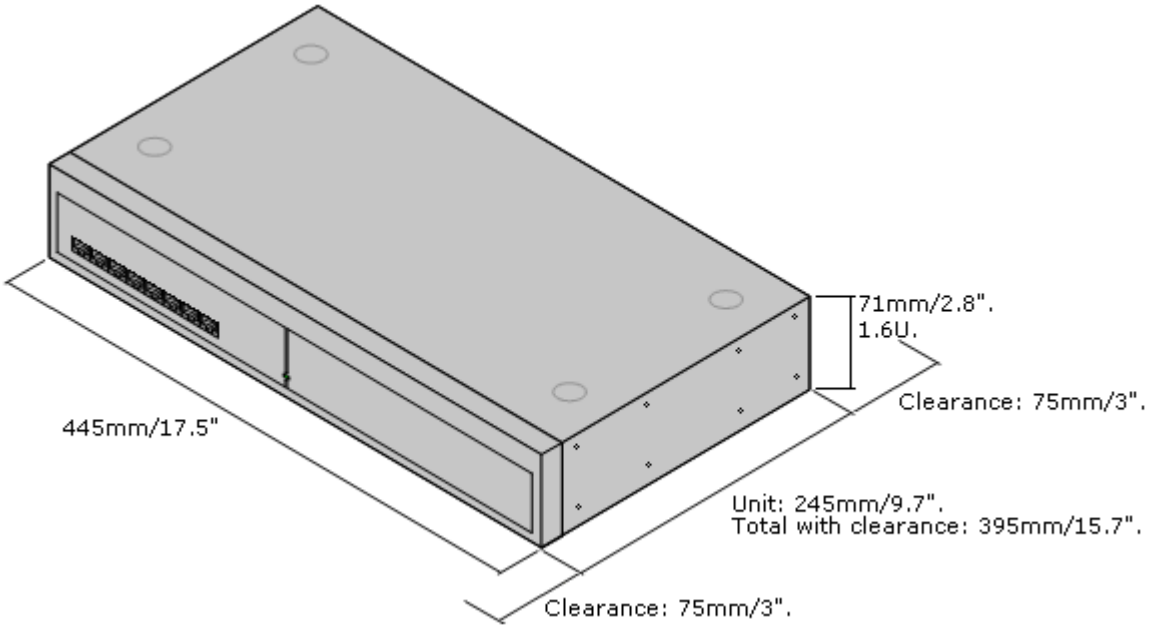

2.2.3 Wall Mounting

IP500, IP500 V2 control units and IP500 external expansion modules can be wall mounted. To do this, a wall mounting kit is required in addition to suitable wall fixings. Wall mounting is not supported for IP400 external expansion modules.

In addition to the existing environmental requirements 42 for an IP Office system, the following additional requirements apply when wall mounting a unit:

- The wall surface must be vertical, flat and vibration free. Attachment to temporary walls is not supported.
- Only the screws provided with the mounting kit should used to attach the brackets to the control unit.

The following wall mounting kits exist.

- **IPO IP500 RACK MNTG KIT V3** *(SAP Code 700503160)*
  IPO IP500 RACK MNTG KIT V2 *(SAP Code 700500923)*
  These kits can be used for wall and rack mounting of an IP500 or IP500 V2 control unit and IP500 external expansion modules. The kits incorporates cable routing at the front and rear of the unit. For wall mounted control units it allows orientation of the control unit base card slots to the left or to the right.

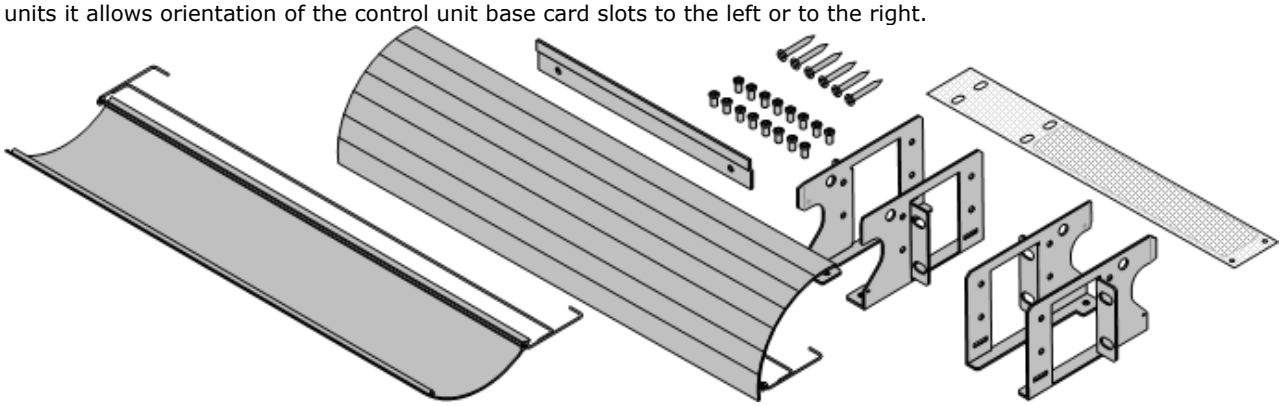

- **IPO IP500 WALL MNTG KIT** *(SAP Code 700430150)*
  This old design of wall mounting kit can be used for wall mounting an IP500 or IP500 V2 control units only. It does not provide any cable routing and requires the control unit to be mounted with the base card slots to the right only.

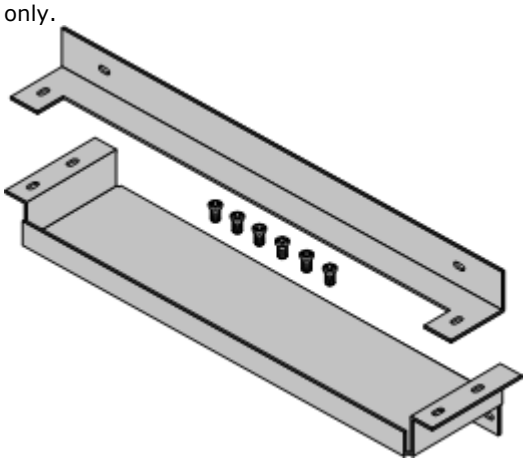

Wall Mounting Kit V2

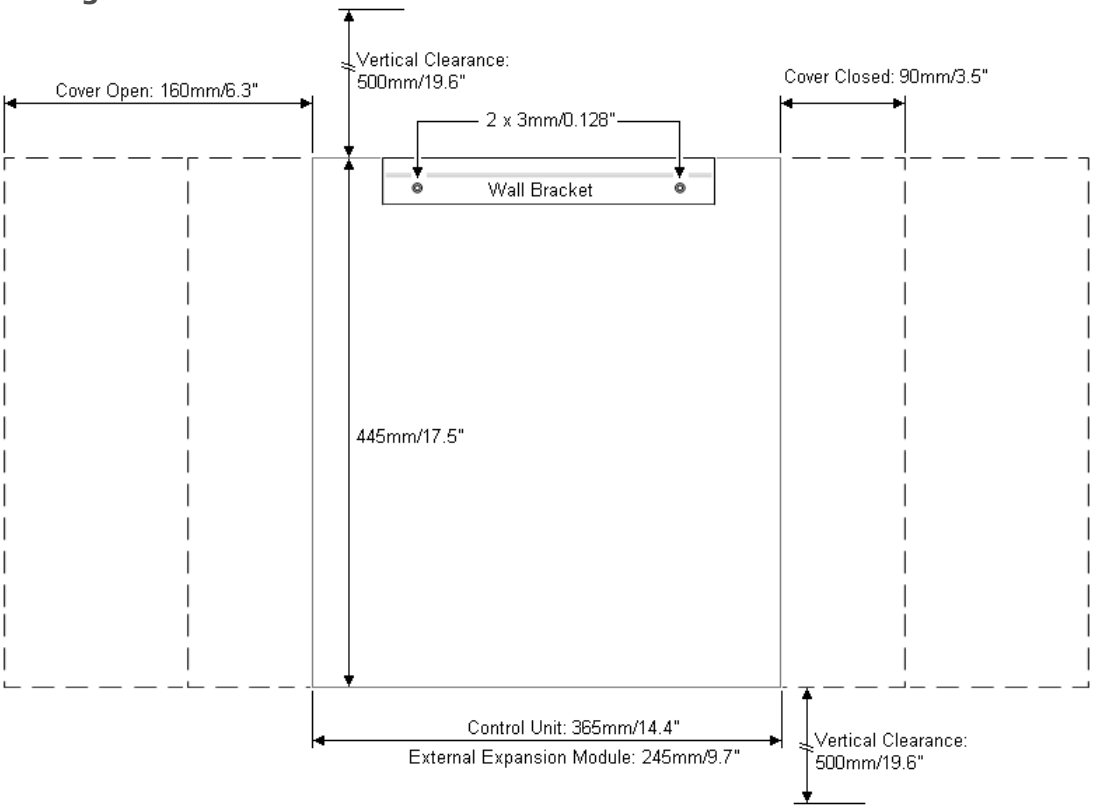

Wall Mounting Kit V1

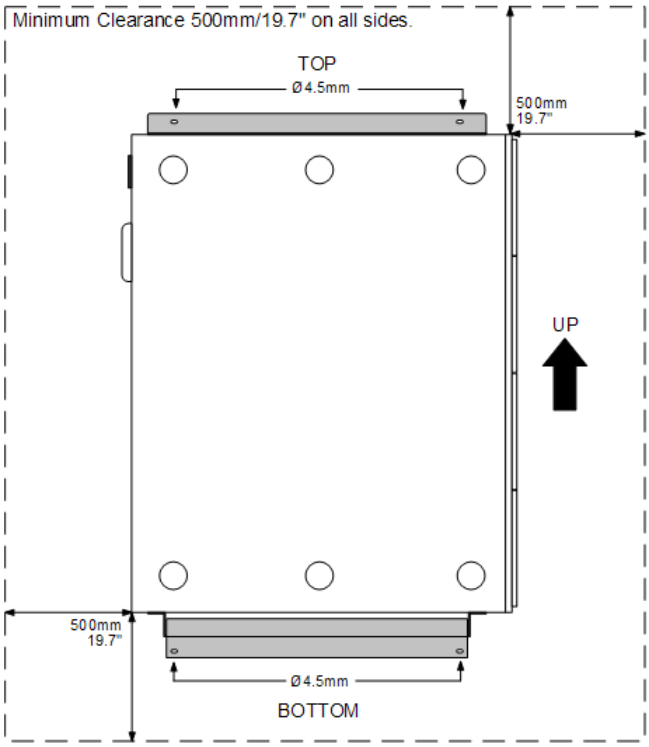

2.2.4 Rack Space Requirements

All IP Office control units and external expansion modules can be rack mounted into standard 19" rack systems. Each unit requires a 2U slot space within the rack. Rack mounting requires an IP400 or IPO IP500 RACK MNTG KIT for each control unit and external expansion module.

Where IP Office systems are being rack mounted, the effect of conditions within the rack cabinet must be considered. For example the rack temperature may be above the room temperature and airflow within the rack will be restricted. The environmental requirements 42 for the individual IP Office units are still applicable inside the rack cabinet.

Note that the new IPO IP500 RACK MNTG KIT V2 can also be used for rack mounting of units.

IPO IP500 RACK MNTG KIT

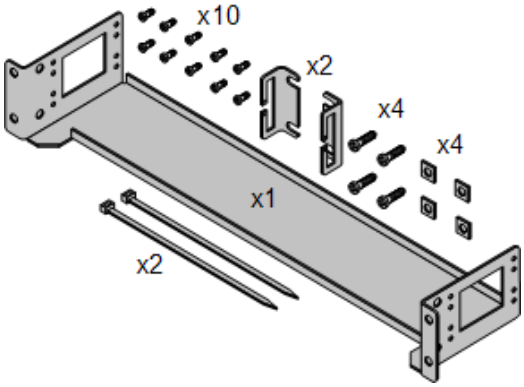

- **IPO IP500 RACK MNTG KIT** *(SAP 700429202)*
  This kit contains all the components required for the rack mounting of a single IP500 V2 control unit, IP500 control unit or IP500 external expansion module. This includes screws for fixing of the brackets to the module, bolts for securing the module in the rack and cable tidy brackets.

IP400 Rack Mounting Kit

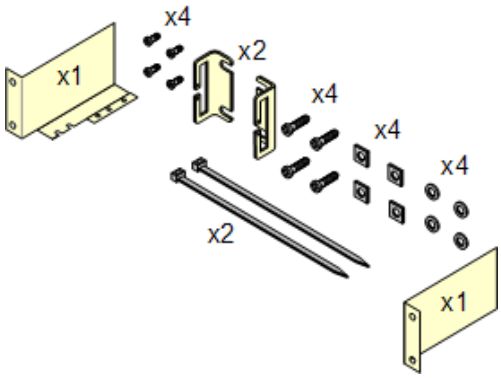

- **IP400 Rack Mounting Kit** *(SAP 700210800)*
  This kit contains all the components required for the rack mounting of a single control unit or expansion module. This includes screws for fixing of the brackets to the module and bolts for securing the module in the rack.

Barrier Box Rack Mounting Kit

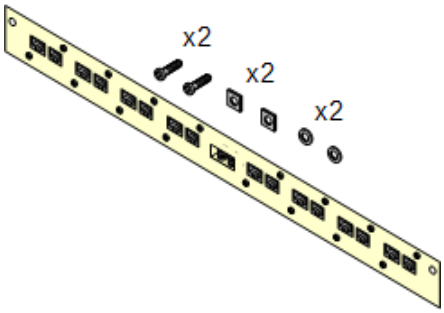

- **Barrier Box Rack Mounting Kit** *(SAP 700293905)*
  Barrier boxes must be used for out-of-building analog phone extensions 31. This bracket allows up to 8 IP Office barrier boxes to be rack mounted and simplifies the number of connections to the protective ground point in the rack. This kit must be used when more than 3 barrier boxes are in use and supports a maximum of 16 barrier boxes for a single external expansion module.

Chapter 3.
Administration Software

3. Administration Software

In order to install and maintain an IP Office system you must be familiar with using the following applications.

- **IP Office Web Manager**
  For IP Office Release 8.0+, features of systems running in IP Office Basic Edition - Quick Mode mode can be managed using a web browser.
- **Phone Based Administration**
  For systems running in IP Office Basic Edition - Quick Mode mode, many features can be administered using phone based administration from either of the first two extensions in the system.
- **IP Office Manager**
  IP Office Manager is used to access all parts of the IP Office configuration. Different levels of access can be defined to control which parts of the configuration Manager user can view and alter. Manager is also used to upgrade the software files used by an IP Office system.
- **System Status Application**
  The IP Office System Status application (SSA) is a reporting tool that provides a wide range of information about the current status of an IP Office system. Its can report the available resources and components within the system and details of calls in progress. Details of the number of alarms are recorded and the time date of the most recent alarms. When required for diagnostics escalation, SSA is able to take a snap shot image of the IP Office system's status including a copy of its current configuration. Use of SSA requires an IP Office service user name and password that has been configured for System Status access in the IP Office's security settings.
- **Monitor (System Monitor)**
  IP Office Monitor (also known as System Monitor) is a tool that can show all activity on the IP Office system in great detail. As a consequence, interpretation of Monitor traces requires a high-level of data and telephony protocol knowledge. However, all IP Office installers and maintainers must understand how to run Monitor when necessary as Avaya may request copies of Monitor traces to resolve support issues.

3.1 Phone Based Administration

For systems running in IP Office Basic Edition - Quick Mode mode, many features can be administered using phone based administration.

Some settings cannot be changed through phone based administration; for example IP address and SIP trunk settings. Those settings are only used in conjunction with network systems for which it is assumed that IP Office Manager will be used for system configuration.

Phone based administration is only possible using either of the first two extension in the system. The phone connected at those positions also needs to be capable of being used for phone based admin.

- Supported phones are: ETR 18D, ETR 34D, M7310, M7310N, M7324, M7324N, T7316E, T7316, 1408 and 1416, 9504 and 9508 phones.
- The card fitted into Slot 1 of the control unit must be the correct type to support the phones.
- For details, refer to the IP Office Basic Edition - Quick Mode Phone Based Administration manual.

3.2 Browser Based Administration - IP Office Web Manager

For Release 8.0+, systems running in IP Office Basic Edition - Quick Mode, IP Office Basic Edition - PARTNER® Mode or IP Office Basic Edition - Norstar Mode mode can be configured via web browser. For Release 8.1, IP Office Web Manager is also used for the on-boarding of all IP500 V2 systems for Avaya support and maintenance.

Access to the system is via its IP address and then selecting the ***IP Office Web Management*** link. This documentation covers the recommended initial configuration 82 that can be done via web based management. Full use of web based management is covered in the IP Office Basic Edition Web Base Management manual.

In order to use IP Office Web Manager, a number of criteria as listed below must be met. Most of these are applied automatic to a new system installed with IP Office Release 8.0 or higher. However, for systems being upgraded to IP Office Release 8.0 or higher, additional upgrade steps may be required.

Enabling IP Office Web Manager

1. The IP Office Web Manager files must be present on the System SD card. This can be done in a number of way:
   - By selecting to include those files when prompted to do so while recreating the IP Office SD card 145 using IP Office Manager.
   - By selecting **Upload System Files** when upgrading the system using IP Office Manager.
2. The IP Office system security must allow IP Office Web Manager operation:
   - This is done automatically for any new system installed with IP Office Release 8.0 or higher software.
   - This is done automatically for any existing pre-IP Office Release 8.0 system during the upgrade if the system is set to use the pre-IP Office Release 8.0 default password of ***password***.
   - For any system upgraded to IP Office Release 8.0 without first being set back to the default password, either:
     - Using IP Office Manager:
       1. If not already done, select **View | Advanced View**.
       2. Select **File | Advanced | Erase Security Settings (Default)**.
       3. From the **Select IP Office** dialog, select the required system and click **OK**.
       4. Enter the user name **Administrator** and the password for that account (by default for a pre-IP Office Release 8.0 system: ***password***).
       5. IP Office Manager will confirm if the action was successful or not.
     - Default the system security settings using a DTE cable 135.

Defaulting the Security on a pre-8.0 IP Office Basic Edition System

In order to allow the security changes necessary for an existing system to support IP Office Web Manager after being upgraded to IP Office Release 8.0 or higher, the system must be reset to the default password before being upgraded. This can be done using IP Office Manager or phone based administration.

Using IP Office Manager

1. Start IP Office Manager 56 and receive the configuration from the IP Office system.
2. On the Manager home page, select **Change Remote / Administration Password.**
3. Enter ***password***, the pre-8.0 default, and click **OK**.

Using Phone Based Administration

Refer to the IP Office Basic Edition - Quick Mode Phone Based Administration manual. The system administration function #730 is used to set the security password. This function should be used to set the password back to ***password***.

3.3 Administration Suite Applications

While initial configuration of the system can be done using web based management or phone based administration, an installer should be familiar with the applications in the IP Office Administration suite. This is a set of Windows applications for configuration, maintenance and monitoring of an IP Office system.

3.3.1 Installing the Admin Applications

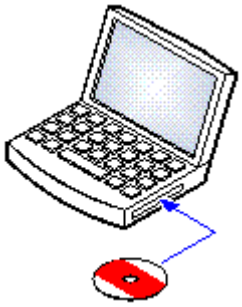

The IP Office Administration suite consists of a number of applications for IP Office installers and maintainers.

- ☐ **System Monitor** - *Install* ✓
- ☐ **Manager** - *Install* ✓
- ☐ **System Status Application** - *Install* ✓
- ☐ **Call Status** - *Optional*
  This software is not supported with IP Office Release 7.0 and higher systems. It is provided only for the maintenance of older systems.

Requirements

- ☐ **IP Office Release 8.1 User/Admin DVD Set (2) (700503230)**
  Alternatively the IP Office Administrator Applications suite can be downloaded from Avaya's support website *(http://support.avaya.com)*.
- ☐ **Windows PC Requirements**
  This should meet the requirements of the administrator applications being installed. The specification below are the minimum requirements for IP Office Manager. If other applications are to be installed on the PC then their individual requirements should also be meet.

Requirement	Minimum	Recommended
Processor	600MHz Pentium or AMD Opteron, AMD Athlon64, AMD Athlon XP.	800MHz Pentium or AMD Opteron, AMD Athlon64, AMD Athlon XP.
RAM	128MB	256MB
HD Space	1GB - 800MB for .NET2, 200MB for Manager.	1.4GB - 800MB for .NET2, 600MB for the full IP Office Admin suite.
Display	800 x 600 - 256 Colors	1024 x 768 - 16-bit High Color
Operating System	Supported on Windows XP Pro, Windows Vista, Windows 7, Windows 2003 and Windows 2008 R2. • 32-bit and 64-bit versions are supported. • Vista support is only on Business, Enterprise and Ultimate versions. • Windows 7 support is only on Professional, Enterprise and Ultimate versions.	

Installing the IP Office Admin Applications

1. Using the **Add or Remove Programs** option in the Windows Control Panel, check that the PC does not already have a version of the IP Office Admin suite installed.
   - If 'yes' and the suite is a pre-IP Office 3.2 version, remove the existing IP Office Admin suite via Add/Remove Programs.
   - If the existing suite is IP Office 3.2 or higher, it is possible to upgrade without removing the previous installation. However, if the system already has a USB Feature Key, the key should be removed prior to upgrading and then reinserted and the PC restarted.
2. Insert the IP Office Administrator Applications DVD. Select the option for the IP Office Administration Suit. A folder window will display the installation files for the administration suite.
3. For Windows 7, right-click on setup.exe and select **Run as administrator**. Otherwise, double-click on **setup.exe**.
4. Select the language you want to use for the installation process. This does not affect the language used by Manager when running. Click **Next >**.
5. Select who should be able to run the Admin Suite applications. Click **Next >**.
6. If required select the destination to which the applications should be installed. We recommend that you accept the default destination. Click **Next >**.
7. The next screen is used to select which applications in the suite should be installed. Clicking on each will display a description of the application. Click on the ▼ next to each application to change the installation selection. When you have selected the installations required, click **Next >**.

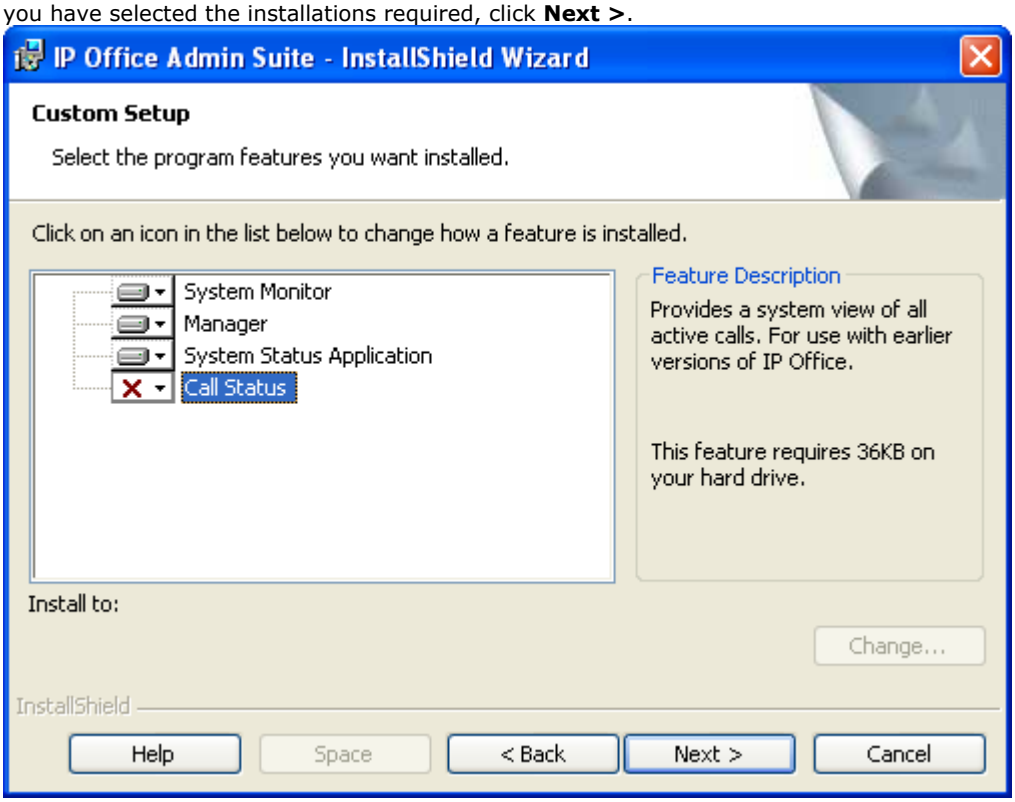

8. Ensure that at minimum **System Monitor** and **Manager** are selected. Click **Next >**.
9. Click **Install**.
10. Installation of Windows .Net2 components may be required. If dialogs for this appear, follow the prompts to install .Net.
11. If requested, reboot the PC.

3.3.2 Installer PC Connection

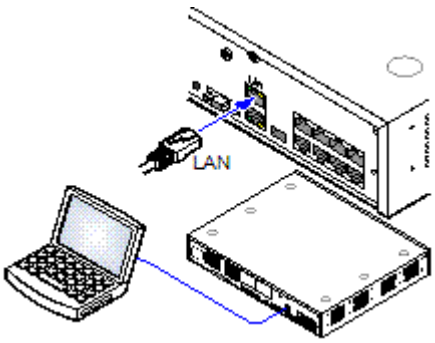

During installation it is recommended that the IP Office control unit is started without it being connected to any network. That ensure that the IP Office defaults to a known set of IP address settings.

If the IP Office is started connected to a network with a DHCP server. The programming PC will need to be connected to the same network as either a DHCP client or with an IP address valid for that network.

This section covers connecting your installation PC directly to the IP Office control unit.

Requirements

- ☐ **IP Office Administration PC**
  A Windows PC with the IP Office Administrator Application suite installed 53.
- ☐ **LAN Cable**

Direct Connection to a Defaulted IP Office Control Unit

1. The default address for an IP Office control unit LAN port is 192.168.42.1/255.255.255.0. To directly connect a PC, change the TCP/IP properties for the PCs LAN port to the following:

Fixed IP address	192.168.42.203
Subnet mask	255.255.255.0
Default gateway	192.168.42.1.

   - While setting the PC to be a DHCP client could be used, this is not recommended for performing more advanced functions such as firmware upgrades.

2. Connect the LAN cable from the PCs LAN port the LAN or LAN1 port on the IP Office control unit.
3. Check that the orange LED lamp on the IP Office LAN port is on. The green LED may also be flickering as it indicates traffic across the LAN connection.
4. To test the connection before running Manager or System Status Application:
   - Select **Start | Run** and enter ***cmd***.
   - In the command window that appears enter ping **192.168.42.1**. The results should show a number of ping replies from the IP Office. This confirms basic communication between the Manager PC and the IP Office.
   - If there are no ping replies enter **ipconfig**. The results should list the IP address settings of the Manager PC as required above. If they do enter **exit** and check the cable connection.
5. You can now start Manager 56, System Status 57 or System Monitor 58.

3.3.3 Starting IP Office Manager

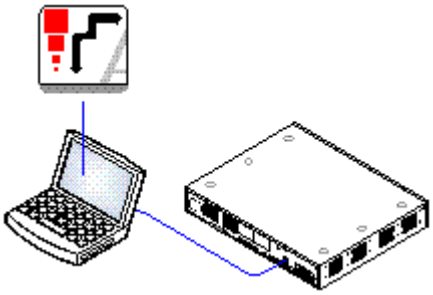

IP Office Manager is used to access all parts of the IP Office configuration. Manager can also be used to upgrade the software files used by an IP Office system.

Requirements

- ☐ **IP Office Administration PC**
  A Windows PC with the IP Office Administrator Application suite installed 53.
- ☐ **LAN Cable**

1. Select **Start | Programs | IP Office | Manager**.
2. If the PC has firewall software installed, you may be prompted as to whether you want to allow this program to access the network. Select **Yes** or **OK**.
3. Select **File | Open Configuration** from the menu bar.
4. The **Select IP Office** window appears. After a few seconds it should list the IP Office control unit. The default name used for a newly installed IP Office control unit is its MAC address.

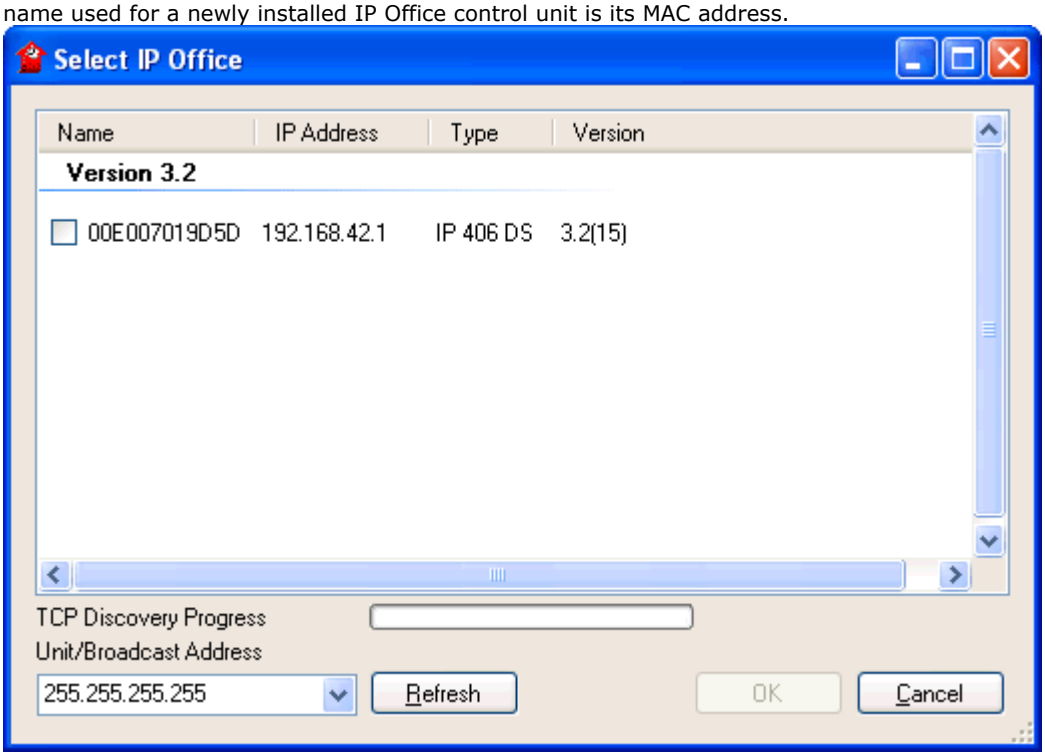

- If the system required was not found, the address used for the search can be changed. Enter or select the required address in the **Unit/Broadcast Address** field and then click **Refresh** to perform a new search.

5. Click the check the box next to the system and then click **OK**.
6. The name and password request is displayed. The name and password must match one of those setup through the security settings. For a IP Office Basic Edition - Quick Mode mode system, the default name and password for configuration access are ***Administrator*** and ***Administrator***.

3.3.4 Starting System Status

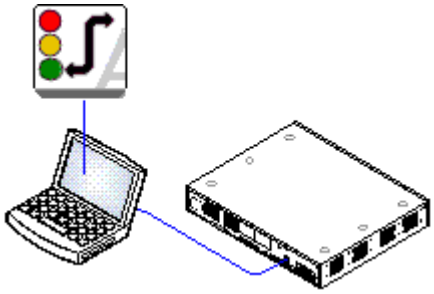

The IP Office System Status application (SSA) is a reporting tool that provides a wide range of information about the current status of an IP Office system. Its can report the available resources and components within the system and details of calls in progress. Details of the number of alarms are recorded and the time date of the most recent alarms.

When required for diagnostics escalation, SSA is able to take a snap shot image of the IP Office system's status including a copy of its current configuration. Use of SSA requires an IP Office service user name and password that has been configured for System Status access in the IP Office's security settings.

Requirements

- ☐ **IP Office Administration PC**
  A Windows PC with the IP Office Administrator Application suite installed 53.
- ☐ **LAN Cable**

1. There are several methods that can be used to start the IP Office System Status application.
   - On a PC where System Status has been installed, select **Start | Programs | IP Office | System Status**.
   - If Manager is also installed and is running, select **File | Advanced | System Status**.
   - For IP500 V2 controls units, start a web browse and enter the IP address of the control unit. Select the link for the System Status Application.
2. Once System Status has started, it will request the details of the IP Office system to which you want it to connect.

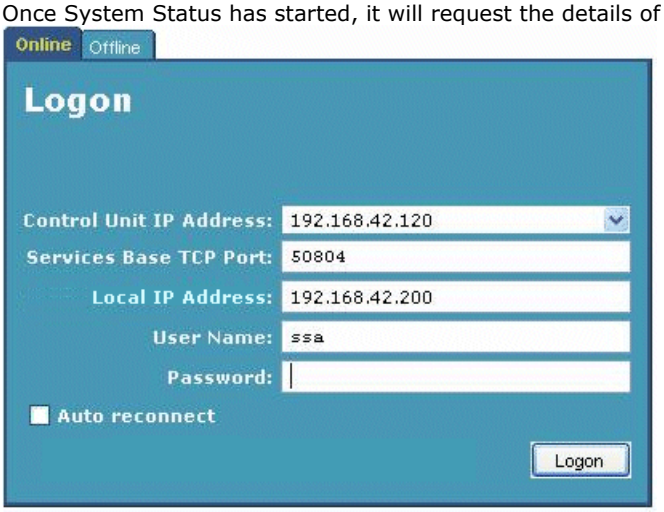

   - **Control Unit IP Address**
     Enter the IP address of the IP Office control units LAN interface or use the drop down to select a previously used address..
   - **Local IP Address**
     If the PC has more than one IP address assigned to its network card or multiple network cards, the address to use can be selected if necessary.
   - **User Name/Password**
     Enter the same user name and password as used for IP Office Manager.
   - **Auto Reconnect**
     If selected, System Status will attempt to reconnect using the same settings if connection to the IP Office is lost.
3. Enter the required details for the IP Office and click **Logon**.

3.3.5 Starting Monitor

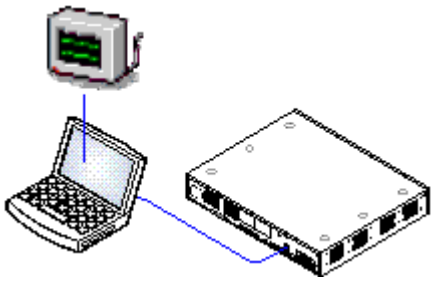

IP Office Monitor (also know as System Monitor) is a tool that can show all activity on the IP Office system in great detail. As a consequence, interpretation of Monitor traces requires a high-level of data and telephony protocol knowledge. However, all IP Office installers and maintainers must understand how to run Monitor when necessary as Avaya may request copies of Monitor traces to resolve support issues.

Requirements

- ☐ **IP Office Administration PC**
  A Windows PC with the IP Office Administrator Application suite installed 53.
- ☐ **LAN Cable**

1. Select **Start | Programs | IP Office | Monitor**.
2. If System Monitor has been run before it will attempt to connect with the system which it monitored previously. If otherwise or you want to monitor a different system use the steps below.
3. Select **File | Select Unit**.

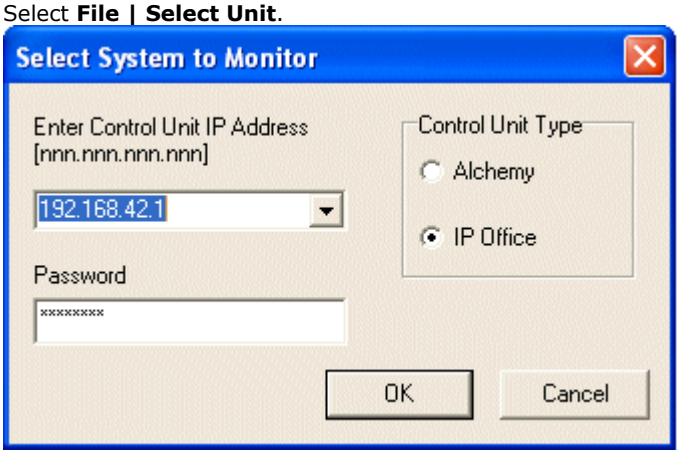

4. Enter the IP Office IP address and password of the IP Office Control Unit you want to monitor.
   - For an IP Office system, ensure that the **Control Unit Type** is set to IP Office.
5. Click **OK**.

Chapter 4.
IP500 V2 Installation

4. IP500 V2 Installation

This installation process is a simple outline as installation requirements and processes will vary.

- In this process, all the IP Office hardware components are installed and connected without being switched on until the end of the process. The control unit will then upgrade all the connected components, including phones, to the appropriate level of firmware.
- Also when switched on, the system is not connected to the customers data network. This ensures that the control unit will default to known default IP address settings (unless you have pre-loaded the System SD card with a configuration file with different settings).

- **Tools and Parts Required** 61
  Check that you have the tools and additional parts required.
- **Documentation** 62
  Ensure that you have obtained and read all the relevant documentation.
- **Unpacking** 63
  Check that all the required equipment has been delivered and that there is no damage.
- **Install the Base Cards** 64
  Attach any trunk daughter cards to the IP500 base cards. Insert the cards into the control unit.
- **Wall Mounting** 67
  If wall mounting, attach the brackets and fit the unit to the wall.
- **Rack Mounting** 70
  If rack mounting, attach the brackets and fit the control unit into the rack.
- **Connect External Expansion Modules** 72
  Connect the external expansions modules to the control unit.
- **Grounding** 74
  Attach required ground cables to the control unit and external expansion modules.
- **LAN Network Connections** 75
  Attach the IP Office control unit and a PC with IP Office Manager to the LAN network.
- **Starting the System** 76
  Insert the System SD card and power up the system.
- **Connecting Phones** 79
  Connect the Avaya digital phones.

4.1 Tools and Equipment Required

The following is a general summary of the tools required. Additional tools and equipment will be required for wall and or rack mounting and to fashion ground cable connections suitable to local requirements.

- **Tools Required**
  - ☐ 5mm Flat-blade screwdriver.
  - ☐ Crosshead screwdriver.
  - ☐ Anti-static wrist strap and ground point.
  - ☐ RJ45-RJ45 Ethernet LAN Cable.
  - ☐ M4 Cross-Head Screwdriver.
  - ☐ Tools suitable for crimping a cable spade.
  - ☐ If wall mounting, drills and tools for wall mounting fixtures.

- **Additional Parts Required**
  In addition to orderable IP Office equipment, the following items will be required.
  - ☐ 14AWG Solid copper wire for ground connection of control units and expansion modules.
  - ☐ Cable sleeve matching local regulator requirements for ground wires. Typically green for a functional ground and green/yellow for a protective ground.
  - ☐ If wall mounting, additional fixtures and fittings suitable for the wall type and mounting kit being used.
  - ☐ Cable ties and labels for tidying and identifying cables.

- **System Administration**
  1. ☐ Selected method for system administration:
     - Suitable phone of use for phone based administration 51.
     - PC with web browser for web based management 51.
     -

4.2 Documentation

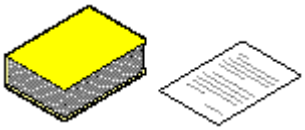

Ensure that you have read this manual in full before starting installation. Also include the installation documentation for any other equipment and applications being installed as part of the IP Office system.

- **! IP Office Technical Bulletins**
  Ensure that you have obtained and read the IP Office Technical Bulletin relating to the IP Office software release which you are installing. This bulletin will contain important information that may not have been included in this manual. IP Office Technical Bulletins are available from the Avaya support website (*http://support.avaya.com*).

- **! Upgrade Licenses**
  Some upgrades may require entry of upgrade licenses. It is still possible to upgrade the system without the necessary licenses, however the system will not provide any telephony functions after the upgrade until the appropriate license is added to the system configuration.

- ***IP Office Product Description***
  Covers the features provided by IP Office 8.1 - IP Office Basic Edition - Quick Mode.
- ***IP Office Basic Edition - Quick Mode Installation Manual***
  Covers the equipment supported and the installation of that equipment.
- ***IP Office Basic Edition - Quick Mode Web Based Manager***
  Covers the system programming that can be performed via web browser.
- ***IP Office Basic Edition - Quick Mode Manager Manual***
  Covers the system programming that can be performed using the IP Office Manager application.
- ***IP Office Basic Edition - Quick Mode Phone Based Administration Manual***
  Covers the range of system programming that can performed from the first two extensions in the system.

Information Web Sites

IP Office documentation is available from the following web sites.

- **Avaya Support** (*http://support.avaya.com*)
  Contains documentation and other support materials for Avaya products including IP Office. Copies of the IP Office CD images are available from this site and updated core software .bin files.
- **Avaya IP Office Knowledge Base** (*http://marketingtools.avaya.com/knowledgebase*)
  Access to an on-line regularly updated version of the IP Office Knowledge Base.

4.3 Unpacking

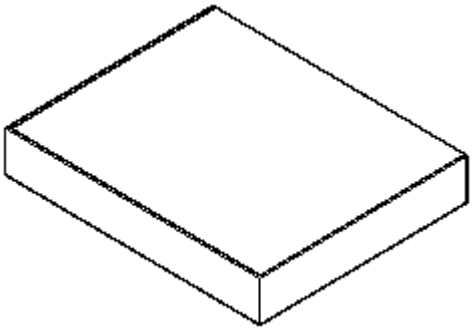

Use the following procedure when unpacking any equipment supplied by Avaya or an Avaya reseller or distributor.

Information Required

- ☐ **Equipment Checklist**.
  An installation checklist of the parts and equipment ordered for the installation.

Procedure

1. ☐ **Check for Packaging Damage**
   Before unpacking any equipment, check for any signs of damage that may have occurred during transit. If any damage exists bring it to the attention of the carrier.
2. ☐ **Check the Correct Parts Have Been Delivered**
   Check all cartons against the packing slip and ensure that you have the correct items. Report any errors or omissions to the equipment supplier.
3. ☐ **Retain All Packaging and Documentation**
   While unpacking the equipment, retain all the packaging material. Fault returns are accepted only if repackaged in the original packaging. If performing a staged installation, the original packaging will also assist when repacking equipment to be moved to the final install site.
4. ☐ **Ensure that Anti-Static Protection Measures are Observed**
   Ensure that anti-static protection measures are observed at all times when handling equipment with exposed electrical circuit boards.
5. ☐ **Check All Parts**
   Visually inspect each item and check that all the necessary documentation and accessory items have been included. Report any errors or omissions to the dealer who supplied the equipment.
6. ☐ **Check All Documentation**
   Ensure that you read and retain any documentation included with the equipment.

4.4 IP500 Card Installation

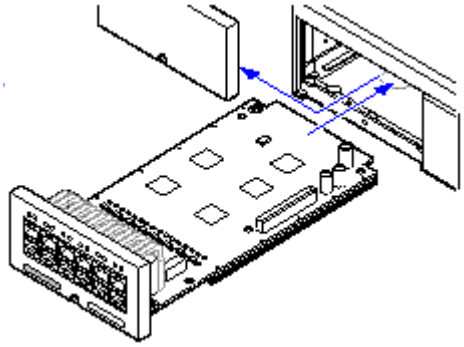

The IP500 base cards and trunk daughter cards should be fitted before power is applied to the control unit. Ensure that cards are inserted in the order that matches the planned or pre-built configuration.

1. Fitting IP500 Trunk Daughter Cards to the Base Cards. 65
2. Installing IP500 Cards into the Control Unit. 66

- **Warnings**
  - Correct anti-static protection steps should be taken before handling circuit boards.
  - Cards must never be added or removed from the control unit while it has power connected.

- **General Notes**
  - Cards can be fitted in any order into any available slots.
  - For phone based administration, the card in slot 1 must be able to support ETR 18D, ETR 34D, M7324, M7310, T7316E, T7316, 1408 or 1416 phones.
  - It is recommended that cards are fitted from left to right.
  - There are restrictions to the number of supported cards of some types. When such a limit is exceed, the right-most card of that type will not function.
  - Ensure that you use the labels supplied to identify the card fitted into the control unit.

4.4.1 IP500 Daughter Card Preparation

IP500 trunk daughter cards can be fitted to any IP500 base card. For IP500 Combination cards, the trunk daughter card is pre-installed and cannot be changed.

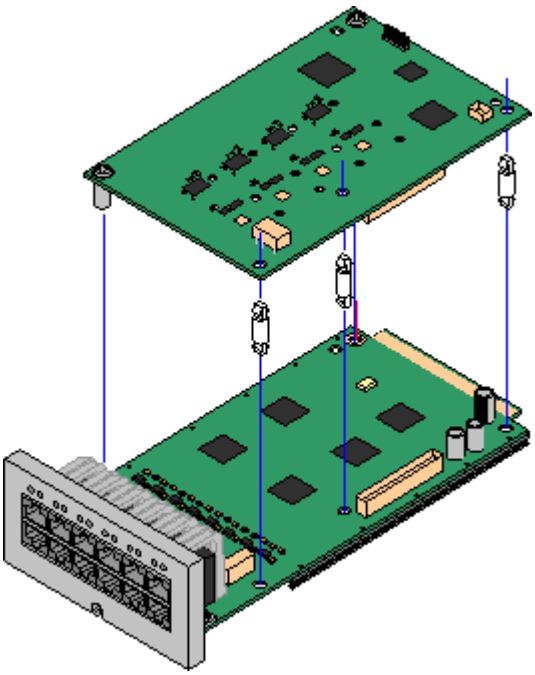

Warnings

1. Correct anti-static protection steps should be taken while handling circuit boards.

Parts and Equipment Required

1. ☐ **IP500 Base Card**
2. ☐ **IP500 Trunk Daughter Card**
3. ☐ **3 Stand Off Pillars**
   These are supplied with the trunk daughter card.

Tools Required.

1. ☐ 5mm Flat-blade screwdriver.
2. ☐ Anti-static wrist strap and ground point.

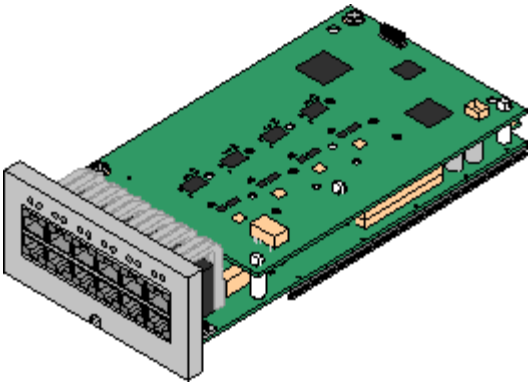

Procedure: Installing a Trunk Daughter Card

1. Check that correct cards have been supplied.
2. Ensure that you are wearing an anti-static wrist strap connected to a suitable ground point.
3. On the base card identify the position of 3 holes for the plastic pillars for the IP500 card. These are along the same edge as the card connector.
4. Fit the stand off pillars to the IP500 base card.
5. If there is a clip-on metal shield over the connector block on the base card, remove it.
6. Using minimal force and checking that the pins are correctly located, push the IP500 trunk card onto its connector block and the stand off pillars.
7. Check that the card connector has snapped into position.
8. Using the washers and screws provided, secure the metal stand off pillars to the base card.
9. A set of labels are supplied with the trunk daughter card. Fit the appropriate label to the front of the base card.

4.4.2 IP500 Card Insertion

Having prepared each IP500 base card by adding any trunk daughter card 65, the base card can be inserted into the control unit.

- **Warnings**
  - Correct anti-static protection steps should be taken while handling circuit boards.
  - Cards must never be added or removed from the control unit while it has power connected.

- **Tools Required**
  - ☐ 5mm Flat-blade screwdriver.
  - ☐ Anti-static wrist strap and ground point.

Installing an IP500 Card

1. Check that there is no power to the control unit.
2. Using a flat-bladed screwdriver, remove the cover from the slot on the front of the control unit that will be used for each card being installed. This cover is no longer required but should be retained until installation has been completed.

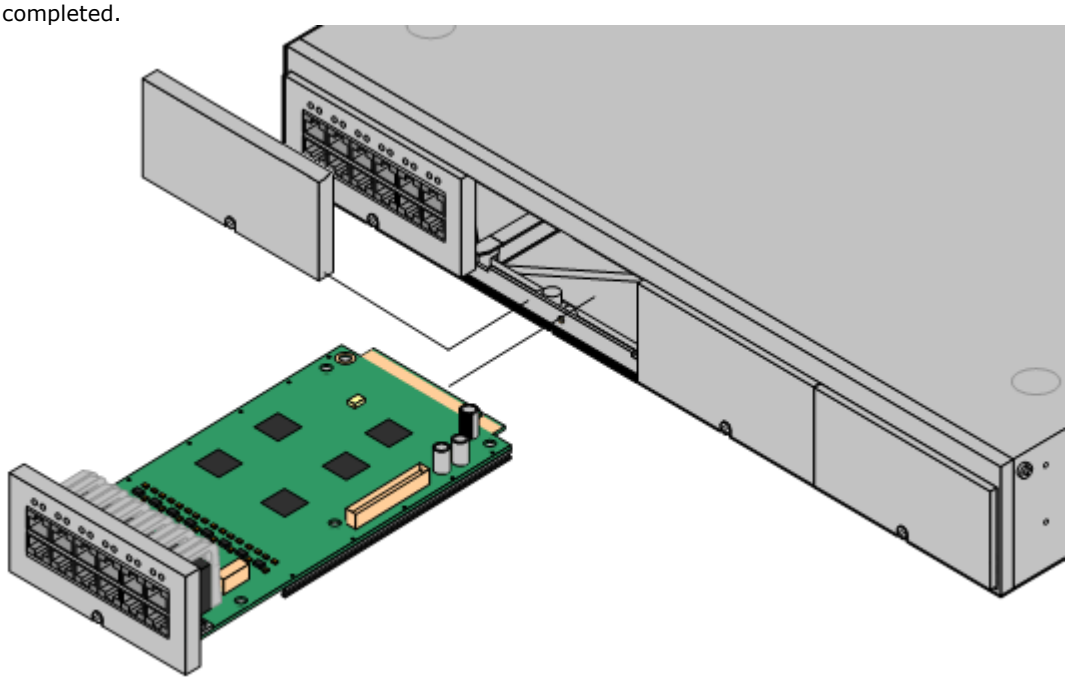

3. Allowing the card to rest against the bottom of the slot, begin sliding it into the control unit. When half inserted, check that the card rails have engaged with the slot edges by trying to gently rotate it. If the card rotates remove it and begin inserting it again.
4. The card should slide in freely until almost fully inserted. At this point apply pressure at the base of the front of the card to complete insertion.
5. Using a flat-bladed screwdriver secure the card.

4.5 Wall Mounting

IP500, IP500 V2 control units and IP500 external expansion modules can be wall mounted. To do this, a wall mounting kit is required in addition to suitable wall fixings. Wall mounting is not supported for IP400 external expansion modules.

In addition to the existing environmental requirements 42 for an IP Office system, the following additional requirements apply when wall mounting a unit:

- The wall surface must be vertical, flat and vibration free. Attachment to temporary walls is not supported.
- Only the screws provided with the mounting kit should used to attach the brackets to the control unit.

The following wall mounting kits exist.

- **IPO IP500 RACK MNTG KIT V3** *(SAP Code 700503160)*
  IPO IP500 RACK MNTG KIT V2 *(SAP Code 700500923)*
  These kits can be used for wall and rack mounting of an IP500 or IP500 V2 control unit and IP500 external expansion modules. The kits incorporates cable routing at the front and rear of the unit. For wall mounted control units it allows orientation of the control unit base card slots to the left or to the right.

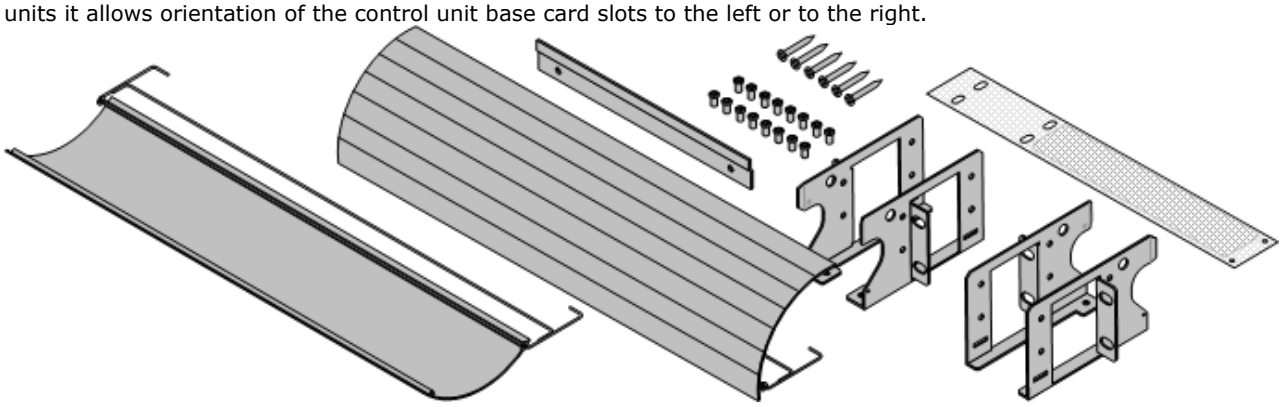

- **IPO IP500 WALL MNTG KIT** *(SAP Code 700430150)*
  This old design of wall mounting kit can be used for wall mounting an IP500 or IP500 V2 control units only. It does not provide any cable routing and requires the control unit to be mounted with the base card slots to the right only.

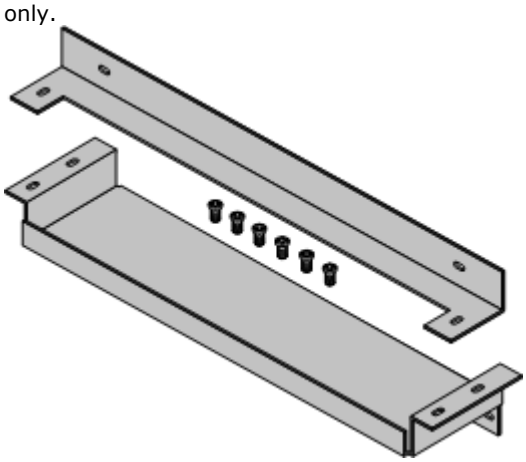

4.5.1 Wall Mounting Kit V2/V3

These notes relate to the **IPO IP500 RACK MNTG KIT V2** *(SAP 700500923)* and **IPO IP500 RACK MNTG KIT V3** *(SAP 700503160)*. These kits can be used to wall or rack mount IP500 and IP500v2 control units and IP500 external expansion modules.

The kits includes all components necessary for wall mounting onto a plywood surface. The use of the cable covers is optional.

In addition to the existing environmental requirements 42 for an IP Office system, the following additional requirements apply when wall mounting a unit:

- The wall surface must be vertical, flat and vibration free. Attachment to temporary walls is not supported.
- Only the screws provided with the mounting kit should used to attach the brackets to the control unit.
- The installation must be done by a service person only.
- For control units, the mesh flame screen must be installed on the bottom edge of the control unit before mounting.
  - For the V3 kit, the flame screen attaches to the outside of the control unit.
  - For the V2 kit, the flame screen is inserted inside the control unit chassis. To do this you must wait at least 15 minutes after removing the power cord before fitting the flame screen.
- Ensure that the system has been shutdown and power has been removed from all the units. Shutdown the system using a shutdown command and then remove power. Do not simply remove the power.
- A suitable mounting surface of at least 19mm (0.75 inch) plywood is required.
- Full installation instructions are included with the kit.

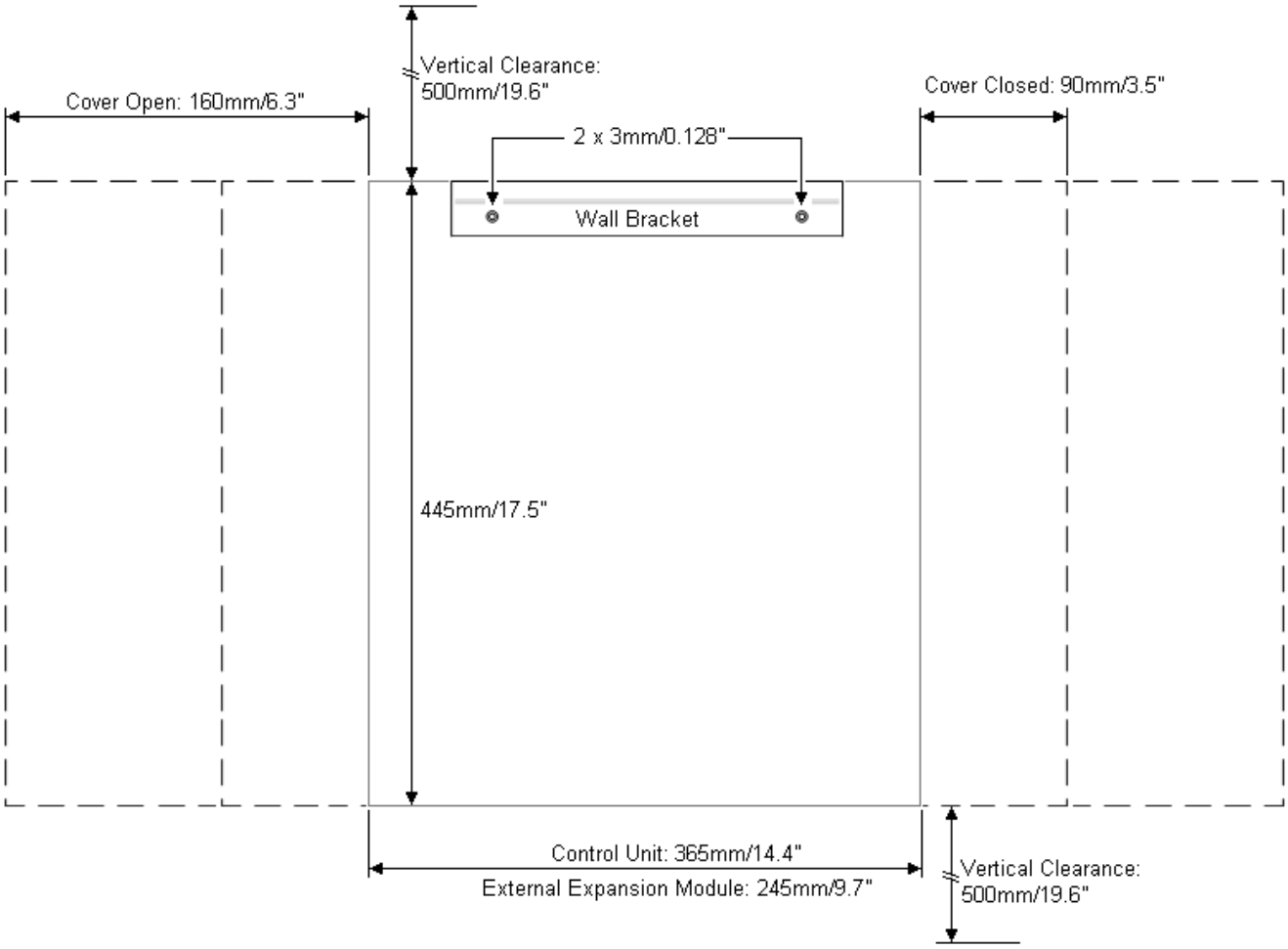

4.5.2 Wall Mounting Kit V1

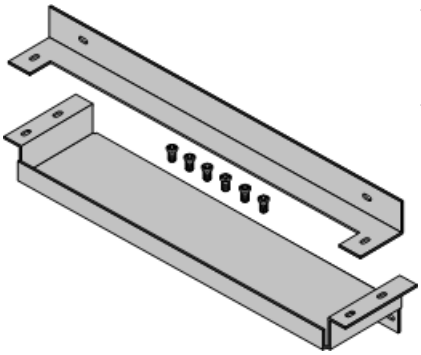

These notes relate to the older design of wall mounting kit *(SAP 70043015)* used for IP500 and IP500 V2 control units. This kit cannot be used for external expansion modules.

The kit includes two brackets, one top and one bottom, and screws for attachment to the control unit. Additional 4 x 4.5mm fixtures and fittings are required suitable for the wall type.

In addition to the existing environmental requirements 42 for an IP Office system, the following additional requirements apply when wall mounting a unit:

- The wall surface must be vertical, flat and vibration free. Attachment to temporary walls is not supported.
- Only the screws provided with the mounting kit should used to attach the brackets to the control unit.
- The brackets must be used as shown, with the deeper tray-like bracket used at the bottom of the wall mounted control unit.

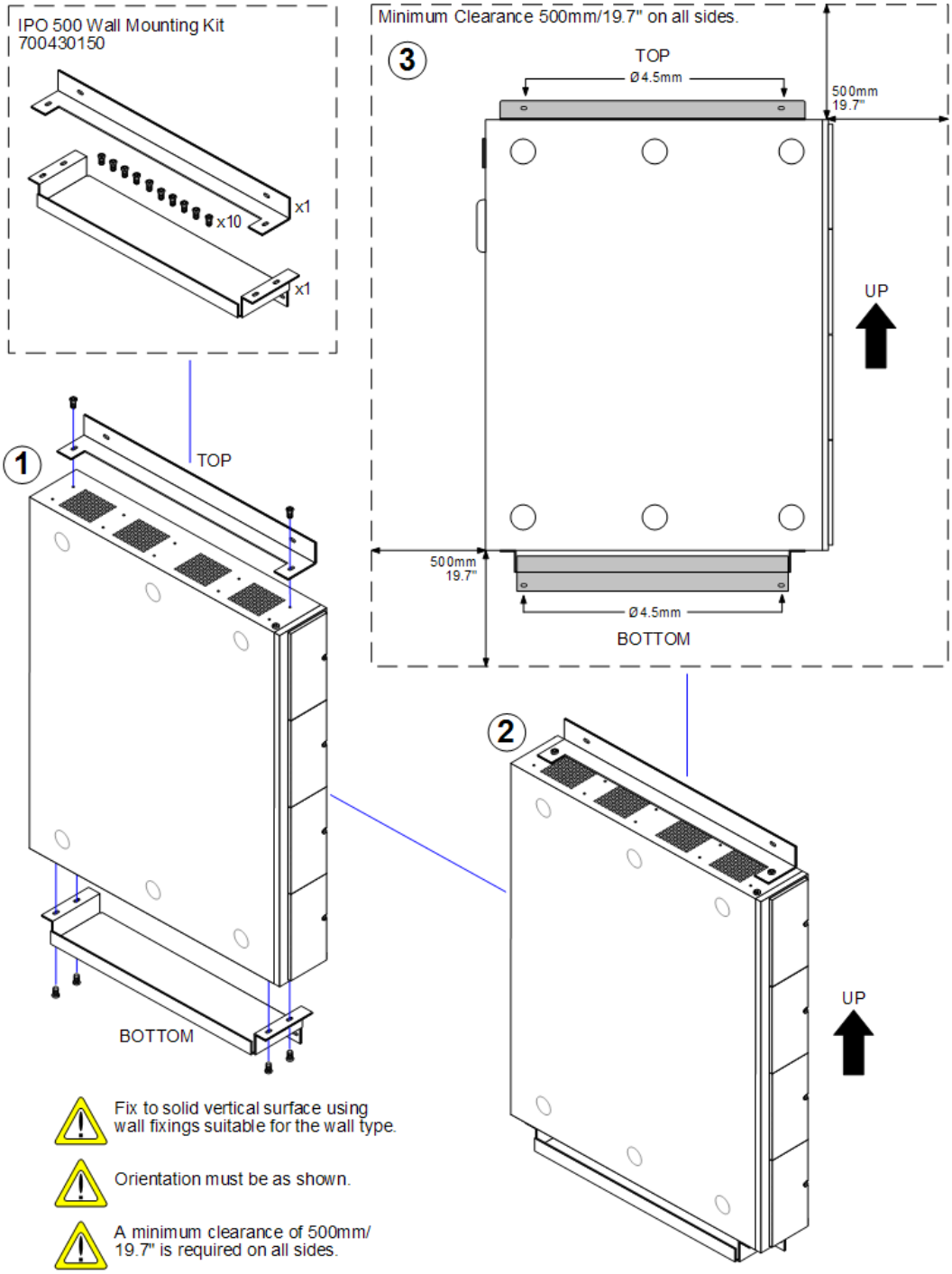

4.6 Rack Mounting

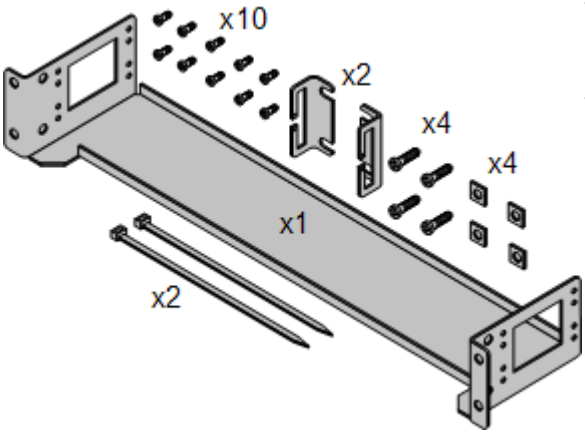

The IP500 control unit and IP500 external expansion units can be rack mounted if required into 19-inch rack systems. This requires an IPO IP500 RACK MNTG KIT (SAP 700429202) for each unit.

The kit includes:

- A rack mounting bracket and screws for attachment of the bracket to the unit
- Nuts and bolts for rack attachment.
- Brackets and cable ties for cable tidying.

As indicated in the diagram following, the rack mounting bracket can be used in several positions on the unit. IP400 external expansion units used in an IP500 system can also be rack mounted but use a separate IP400 Rack Mounting Kit.

Environmental Requirements

In addition to the existing environmental requirements 42 for an IP Office system, the following additional factors must be considered when rack mounting a unit:

1. Rack Positioning - Ensure compliance with the rack manufacturers safety instructions. For example check that the rack legs have been lowered and fixing brackets have been used to stop toppling.
2. Elevated Operating Ambient - If installed in a closed or multi-unit rack assembly, the operating ambient temperature of the rack environment may be greater than room ambient. Therefore, consideration should be given to installing the equipment in an environment compatible with the maximum ambient temperature (Tma) specified by the manufacturer.
   - ☐ Operating Temperature: 5°C (40°F) to 40°C (104°F).
   - ☐ Operating Humidity: 10% to 95% non-condensing.
3. Reduced Air Flow - Installation of the equipment in a rack should be such that the amount of air flow required for safe operation of the equipment is not compromised. Proper ventilation must be maintained. The side ventilation slots on the IP500 control unit should not be covered or blocked.
4. Mechanical Loading - Mounting of the equipment in the rack should be such that a hazardous condition is not achieved due to uneven mechanical loading.
5. Circuit Overloading - Consideration should be given to the connection of the equipment to the supply circuit and the effect that overloading of the circuits might have on overcurrent protection and supply wiring. Appropriate consideration of equipment nameplate ratings should be used when addressing this concern.
6. Reliable Earthing - Reliable earthing of rack-mounted equipment should be maintained. Particular attention should be given to supply connections other than direct connections to the branch circuit (e.g. use of power strips).
7. ⚠ Only the screws provided with the mounting kit should used to attach the brackets to the control unit.

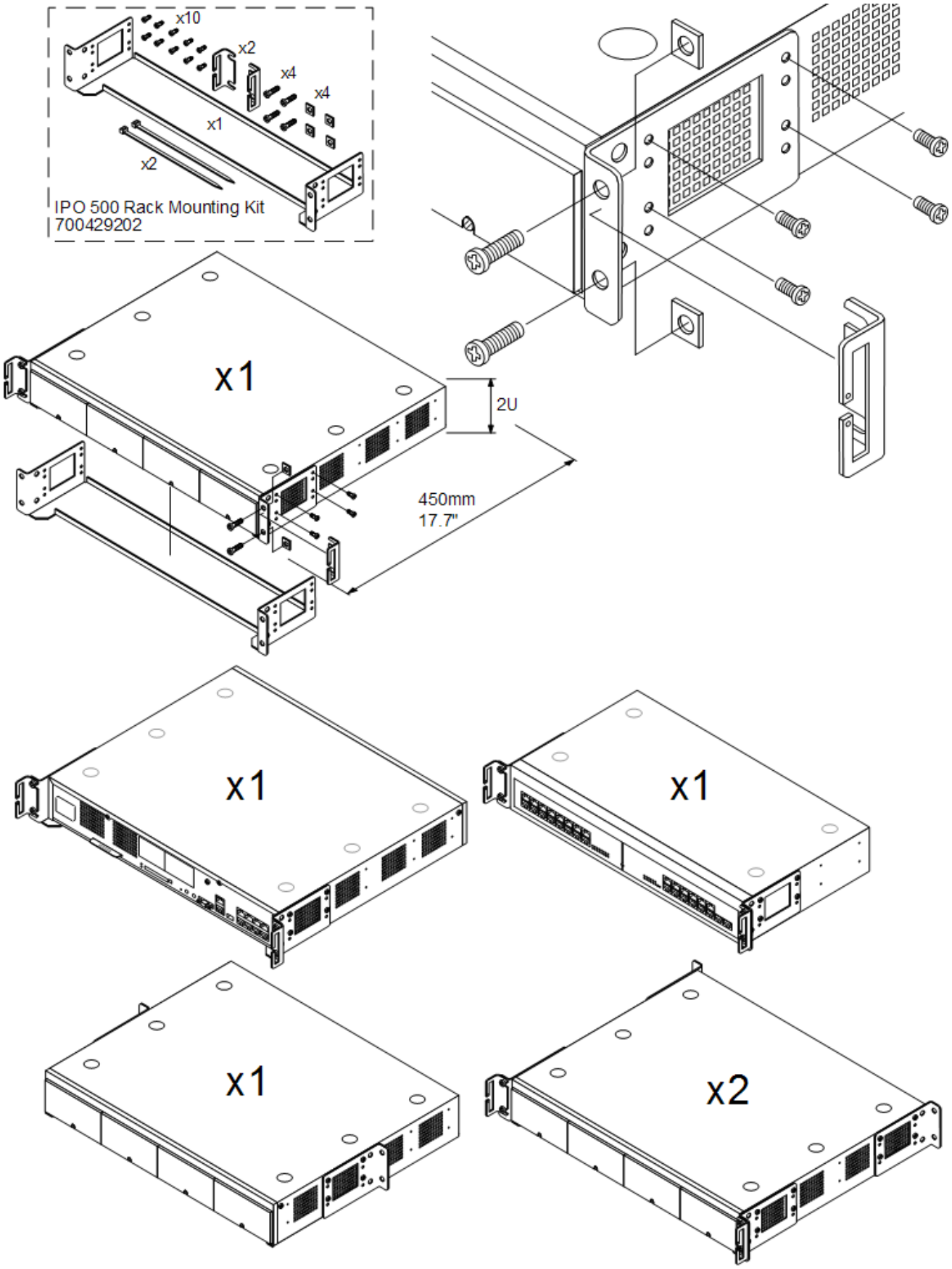

- ⚠ Only the screws provided with the mounting kit should used to attach the brackets to the control unit.

4.7 Connecting External Expansion Modules

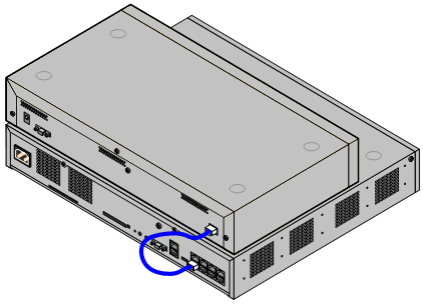

Any external expansion modules should be connected to the control unit before power is applied to the control unit. Ensure that modules are attached in the order that matches the planned or pre-built configuration.

External expansion modules connect to the IP Office control unit using an expansion interconnect cable. Each module is supplied with an expansion connect cable and a power supply unit 25. An appropriate locale specific power cord 26 for the power supply unit must be ordered separately.

- Each external expansion module is supplied with a blue 1 meter (3'3'') expansion interconnect cable. This cable must be used when connecting to expansion ports on the rear of a control unit.

Installation Requirements

- ☐ Installation space either on or under the existing IP Office control unit.
- ☐ Switched power outlet socket.
- ☐ Available EXPANSION port on the control unit.
- ☐ Grounding Requirements
  - ☐ **Functional Grounding**
    Connection of a functional earth 30 is:
    - ☐ Recommend for all modules.
    - ☐ Connection of a functional ground is mandatory for Analog Trunk modules.
  - ☐ **Protective Grounding**
    Connections of a protective ground via surge protection equipment 31 is:
    - ☐ Mandatory for Analog trunk modules in the Republic of South Africa.
    - ☐ Mandatory for Digital Station and Phone modules connected to out of building extensions.
    - ☐ Mandatory for Digital Station V2 and Phone V2 modules.

Tools Required

- ☐ Manager PC.
- ☐ Tools for rack mounting 70 (optional).

Parts and Equipment Required

- ☐ **External Expansion Module**.
  Each module is supplied with a suitable external power supply unit and a 1m blue interconnect cable. 2m Yellow interconnect cables are supplied with the IP500 4-Port Expansion card and should only be used with that card.
- ☐ Power cord for the power supply unit 26.
- ☐ Rack mounting kit 32 (optional).
- ☐ Wall mounting kit - IP500 external expansion modules only (optional).
- ☐ Cable labeling tags.

Procedure

1. External expansion modules should not be attached to a control unit that has power.
2. If the IP Office system is being installed in a rack, attach the rack mounting kit 70 to the expansion module.
3. Attach the external expansion module's power supply but do not switch power on.
4. Connect the expansion interconnect cable from the module's EXPANSION port to the EXPANSION port on the control unit. Make careful note of the port used and include this detail on the cable label and any other system records.

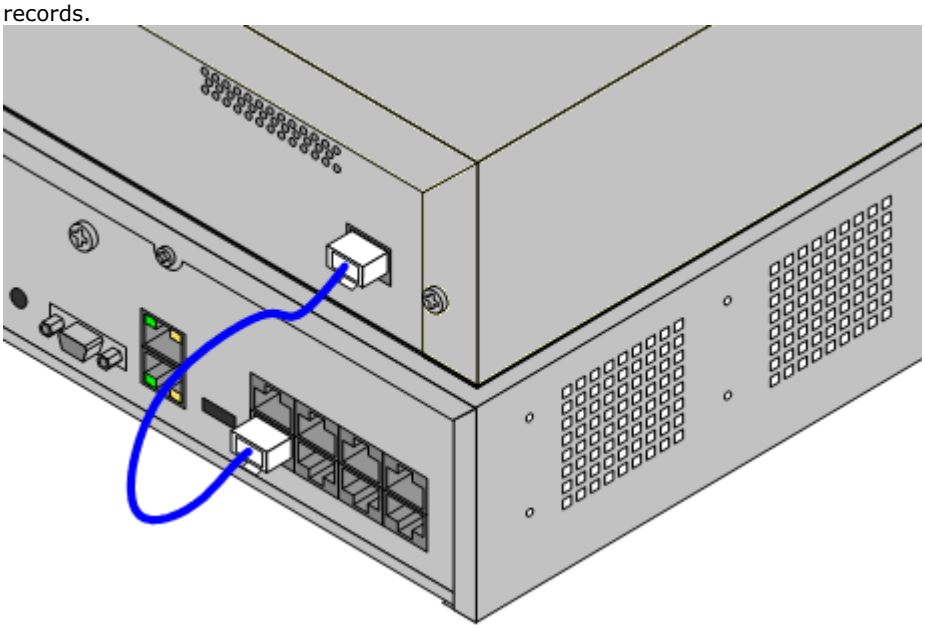

4.8 Grounding

Use of ground connections reduces the likelihood of problems in most telephony and data systems. This is especially important in buildings where multiple items of equipment are interconnected using long cable runs, for example phone and data networks.

All IP Office control units and external expansion modules must be connected to a functional ground. Where the unit is connected to a power outlet using a power cord with an earth lead, the power outlet must be connected to a protective earth.

In some cases, such as ground start trunks, in addition to being a protective measure this is a functional requirement for the equipment to operate. In other cases it may be a locale regulatory requirement and or a necessary protective step, for example areas of high lightning risk.

- **WARNING**
  During installation do not assume that ground points are correctly connected to ground. Test ground points before relying on them to ground connected equipment.
- **Additional protective equipment**
  In addition to grounding, additional protective equipment will be required in the following situations.
  - On any Digital Station or Phones external expansion module connected to an extension located in another building. Refer to "Out of Building Telephone Installations 31".
  - In the Republic of South Africa, on all Analog Trunk external expansion modules (ATM16) and on any control units containing an analog trunk cards (ATM4/ATM4U).

Tools Required

- ☐ M4 Cross-Head Screwdriver.
- ☐ Tools suitable for crimping a cable spade.

Parts and Equipment Required

- ☐ 14AWG Solid copper wire for ground connection.
- ☐ Cable sleeve matching local regulator requirements. Typically green for a functional ground and green/yellow for a protective ground.

The ground point on IP Office control units and expansion modules are marked with a ⏚ or ⏚ symbol. Ground connections to these points should use a 14 AWG solid wire with either a green sleeve for a functional ground or green and yellow sleeve for a protective ground.

IP500/IP500 V2 Control Unit

On IP500 and IP500 V2 control units the ground point is located above the RS232 DTE port.

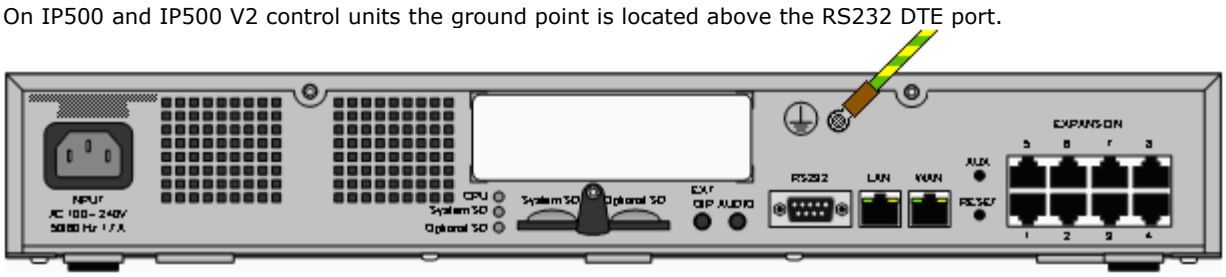

External Expansion Modules

On expansion modules, the ground point is a 4mm screw located towards the right on the rear of the module.

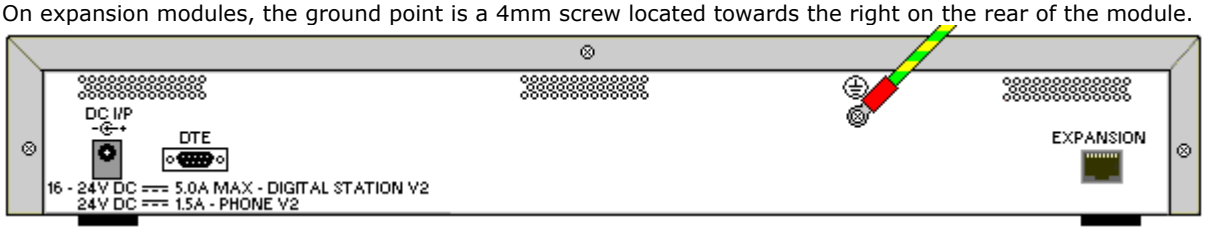

- On some older modules, the dedicated ground point screw is not present. In those cases, the top-center cover fixing screw (3mm) can be used as an alternative ground connection point. A toothed washer should be added to ensure good contact.

4.9 Network Connection

The section below details how a new IP Office system determines what IP address it should use. Note that this only applies for a new system loading IP Office Release 7.0 or higher.

IP Address and DHCP Mode Resolution

When a defaulted or new IP Office control unit is switched on, it requests IP address information from a DHCP Server on the network. For IP Office Basic Edition - Quick Mode systems only the LAN port (LAN1) should be used. The WAN port (LAN2) is not normally used except for emergency configuration access.

- The syste, makes a DHCP request for what IP address information it should use.
- If a DHCP server responds within approximately 10 seconds, the control unit defaults to being a DHCP client and uses the IP address information supplied by the DHCP server.
- If no DHCP Server responds, the control unit still defaults to being the DHCP client but assumes the following default addresses:
  - LAN Port (LAN1): 192.168.42.1/255.255.255.0.
  - WAN Port (LAN2): 192.168.43.1/255.255.255.0.
    Note: On IP Office Basic Edition - Quick Mode systems this port should not be used except for emergency configuration access.
  - Note that the IP Office does not check that these addresses are valid and or available on the network.

- **!** Once an IP500 V2 control unit has obtained IP address and DHCP mode settings, it will retain those settings even if rebooted without a configuration file present on the System SD card. To fully remove the existing IP address and DHCP mode setting the IP Office must be defaulted using IP Office Manager.

PC Connection

Depending on the conditions that applied when the IP Office control unit was first started, a PC can be connected as follows:

- **If the IP Office is not connected to a network:**
  Connect the PC directly to the IP Office. It must be set to an address valid on the same network as the IP Office defaults above.
- **If the IP Office is connected to a network with no DHCP server:**
  Connect the PC directly to the IP Office. It must be set to an address valid on the same network as the IP Office defaults above.
- **If the IP Office is connected to a network with a DHCP server:**
  Connect the PC to the network. It must be set to be a DHCP client or to an address that is valid for the network.

4.10 Starting the System

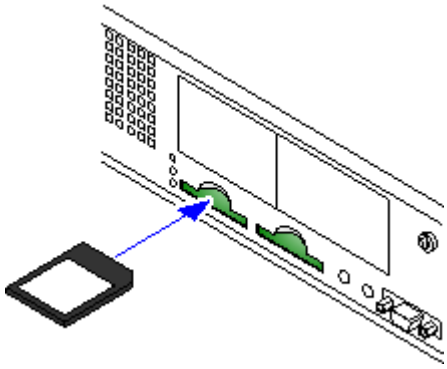

1. With the IP500 V2 control unit shut down or unpowered, insert the Avaya System SD card into the **System SD** slot on the rear of the control unit.
   - On newer controls units, the SD card slots are partially covered by a plastic tab. Partial release the screw holding the tab so that it can be moved clear of the required card slot.
   - Ensure that you have the correct card.
   - Ensure that the card has the level of software required. If necessary the card can be upgraded to match the version of IP Office Manager .
2. Apply power to the external expansion modules if any. The power outlet used must include a switch and in cases where the power cord includes an earth lead, that outlet must have a protective earth connection.
3. Apply power to the IP500 V2 control unit. The power outlet used must include a switch and the power outlet must have a protective earth connection.
4. The control unit will begin loading firmware from the System SD card with which it will upgrade itself and the components installed in the control unit.
5. This process takes approximately a minute. The end of this process will be indicated by LED1 on each base card flashing every 5 seconds. LED9 on each base card fitted with a trunk daughter card will also flash every 5 seconds.
6. The control unit will then begin upgrading the external expansion modules. This will be indicated by the red center LED on each module flashing red. The process is completed when the LED changes to steady green.
7. It should be possible now to use IP Office Manager to access the configuration of the IP Office.

The LEDs on the rear of the control unit go through the following sequence during a normal start up. Note that the times are approximately only:

LED	4s	4s	12s	5s	2s	5s	5s	10s	10s	Finished
CPU	Orange	Green	Green	Green Red	Green	Green	Green	Green	Green	Green
System SD	Orange	Off	Green	Green	Green	Off	Green	Green	Green Flash	Green
Optional SD If present.	Orange	Off	Green	Green	Green	Off	Off	Green	Green	Green

On the front of the control unit, LED1 on any IP500 base cards fitted is used as follows. LED9 is also used for any trunk daughter cards fitted.

LED	30s	30s	Finished
LED1/LED9	Red	Red Fast Flash	Red Flash every 5 seconds

4.10.1 Checking the LEDs

Control Unit LEDs

LED	Description
Optional SD **System SD**	• **Off** = Card shutdown 156. • **Green on** = Card present. • **Green flashing** = Card in use. • **Orange steady** = Reset imminent. • **Red flashing** = Card initializing or shutting down. • **Red fast flashing** = card full • **Red steady** = Card failure/wrong type.
CPU	• **Alternate red/green** = Starting up. • **Green on** = Okay. • **Red on** = No software. • **Flashing Red** = Error/Shutdown.

Base Card LEDs

Base Card	LEDs 1 to 8 Usage

All Cards	• LED1 is also used for base card status:
	  • **Red On** = Error
	  • **Red Slow Flash** = Initializing.
	  • **Red Flash every 5 seconds** = Card okay.
	  • **Red Fast Flash** = System shutdown.

IP500 Analog Phone	• No status LEDs are used for analog phone extensions.
IP500 Digital Station	• **Green Flashing** = Phone detected. • **Green On** = Phone active.
IP500 Combination	LEDs 1 to 6 • **Green Flashing** = Phone detected. • **Green On** = Phone active.

Trunk Daughter Card LEDs

Trunk Daughter Card	LEDs 9 to 12 Usage

All cards	• LED 9 is also used for daughter card status.
	  • **Red On** = Error
	  • **Red Slow Flash** = Initializing.
	  • **Red Flash every 5 seconds** = Card okay.
	  • **Red Fast Flash** = System shutdown.

Analog Trunk	• **Green on** = V1: Card installed. V2: Line connected to the port but idle. • **Green flashing** = Line in use.
PRI Trunk	• **Off** = No trunk present. • **Green on** = Trunk present. • **Green flashing** = Trunk in use. • **Red/Green Fast Flash** (port 9) or **Green Fast Flash** (port 10) = Alarm indication signal (AIS) from the trunk remote end. • **Red with Green Blink** (port 9) or **Green Blink** (port 10) = Port in loopback mode (set through IP Office System Monitor).
BRI Trunk	• **Off** = No trunk present. • **Green on** = Trunk present. • **Green flashing** = Trunk in use.

External Expansion Module LEDs

Module	LEDs
All	The center LED on all external expansion modules is used to indicate the overall state of the module as follows: • **Red flashing** = Module starting up/Loading firmware. • **Red on** = Error. • **Green on** = Module okay. • **Green flashing** = Module starting up/Loading firmware (IP500 DS16A/30A module only).
Analog Trunk 16	• None.
BRI So8	• **Green On** = Connected. • **Green Flashing** = Activity.

Digital Station 16/30	• **Green Flashing** = Phone detected. • **Green On** = Phone active.
Digital Station 16A/30A	• **Green On** = Phone detected.
Phone	• None.

4.11 Connecting Phones

During initial power up, the IP Office automatically creates extension and user entries for all analog and digital extension ports (DS and TCM) in the system. This allows those devices to be connected without any additional programming.

- **! Warning**
  If the system has been upgraded from a previous release of IP Office software, all phones will be restricted from making any calls until a system upgrade license 246 has been entered. The dialing restriction includes not being able to make emergency calls.
- This section does not cover the installation of DECT, H323 and SIP telephones. For installation of those devices refer to the appropriate supplementary installation manuals.

4.11.1 Analog Phones

Connect any analog phones to their appropriate Phone 241 ports. Ensure that those connected to power failure ports 40 are clearly labeled as such.

4.11.2 ETR Phones

Connect any ETR phones to their appropriate ETR 237 ports. These phones do not need to load additional firmware.

4.11.3 DS Phones

Connect any digital phones to their appropriate DS 235 ports. These phones may need to upgrade their firmware to match that supported by the IP Office core software. The appropriate firmware is supplied with the IP Office Manager software and copied onto the System SD card for IP500 V2 systems.

The phones will automatically load the firmware from the IP Office system if necessary.

- The upgrade process takes approximately 10 minutes during which time the phone will display a warning. The phone should not be disconnected during this process.
- Due to memory requirement, only 10 phones of the same type can be upgraded at a time. Starting from the first port needing to be upgraded, the IP Office will upgrade all connected phones of the same type needing upgrading in batches. It will then upgrade the next connected type of phones needing to be upgraded.
- Once the phone connected to a port has been upgraded, the IP Office will not check whether the phone on that port needs to be upgraded again except following a system reboot, i.e. multiple phones cannot be upgraded by swapping the connected phones on the same.

4.11.4 TCM Phones

Connect any TCM phones to their appropriate TCM ports. These phones do not need to load additional firmware.

Default Buttons

For system's with TCM phone ports, when a phone is first connected to the port, the button programming of the associated user is overwritten with the default button programming appropriate for the phone model.

Chapter 5.

Initial Configuration Using IP Office Web Manager

5. Initial Configuration Using IP Office Web Manager

This section covers the recommended initial configuration actions for a new system using browser based access to the system. This covers just the basic configuration, the full range of configuration possible through web based management is covered in the IP Office Web Based Management manual.

Using IP Office Web Manager

These notes assume that it is a new IP Office system that is being installed. In that scenario, the necessary steps for supporting IP Office Web Manager are automatically applied to the system. However, for systems being upgraded to IP Office Release 8.0 or higher, additional steps may be necessary before IP Office Web Manager can be used. See Enabling Web Manager 83.

Initial Configuration Processes

- **! Warning**

  The processes marked **(!)** in this list are ones which, if the setting is changed, require the system to be restarted in order for the new setting to take effect. Changing them may also cause other settings to reset back to default values. These are additional reasons why these settings should be checked and set as part of initial system configuration wherever possible.

  1. **Set the System Mode** 87 **(!)**
     The system can operate in either ***PBX*** or ***Key*** mode.
  2. **Set the Country** 88 **(!)**
     The correct country setting sets a range of internal settings, especially relating to the operation of trunks, that are otherwise not adjustable through the configuration.
  3. **Set the Default Language** 89 **(!)**
     The system's language for phone displays and voicemail prompts default to the best match to the country setting. However it should still be checked.
  4. **Set the Number of Lines** 90
     This option is used for ***Key*** mode systems. If changed it will overwrite existing button programming.
  5. **Set the Outside Line Prefix** 95 **(!)**
     This option is used for ***PBX*** mode systems. A prefix is not required but 0 or 9 can be used if required.
  6. **Adding Licenses** 91
     The use of and capacity of some features requires licenses added to the configuration.
  7. **Change the Network Settings** 93 **(!)**
     By default, if connected to a customer network the system requests IP address settings as a DHCP client.
  8. **Set the Emergency Numbers** 94
     The correct emergency numbers for the country must be set to ensure that they are excluded from any outgoing call restrictions that may be setup later.
  9. **Select Music on Hold** 95
  10. **Adjust Automatic Line Selection** 96
      For users on a Key mode system, if the user simply goes off-hook to make a call, the system needs to use automatic line selection to determine which of the user's available line or intercom buttons is used for the call.

5.1 Enabling IP Office Web Manager

For Release 8.0+, systems running in IP Office Basic Edition - Quick Mode, IP Office Basic Edition - PARTNER® Mode or IP Office Basic Edition - Norstar Mode mode can be configured via web browser. For Release 8.1, IP Office Web Manager is also used for the on-boarding of all IP500 V2 systems for Avaya support and maintenance.

Access to the system is via its IP address and then selecting the ***IP Office Web Management*** link. This documentation covers the recommended initial configuration 82 that can be done via web based management. Full use of web based management is covered in the IP Office Basic Edition Web Base Management manual.

In order to use IP Office Web Manager, a number of criteria as listed below must be met. Most of these are applied automatic to a new system installed with IP Office Release 8.0 or higher. However, for systems being upgraded to IP Office Release 8.0 or higher, additional upgrade steps may be required.

Enabling IP Office Web Manager

1. The IP Office Web Manager files must be present on the System SD card. This can be done in a number of way:
   - By selecting to include those files when prompted to do so while recreating the IP Office SD card 145 using IP Office Manager.
   - By selecting **Upload System Files** when upgrading the system using IP Office Manager.
2. The IP Office system security must allow IP Office Web Manager operation:
   - This is done automatically for any new system installed with IP Office Release 8.0 or higher software.
   - This is done automatically for any existing pre-IP Office Release 8.0 system during the upgrade if the system is set to use the pre-IP Office Release 8.0 default password of ***password***.
   - For any system upgraded to IP Office Release 8.0 without first being set back to the default password, either:
     - Using IP Office Manager:
       1. If not already done, select **View | Advanced View**.
       2. Select **File | Advanced | Erase Security Settings (Default)**.
       3. From the **Select IP Office** dialog, select the required system and click **OK**.
       4. Enter the user name **Administrator** and the password for that account (by default for a pre-IP Office Release 8.0 system: ***password***).
       5. IP Office Manager will confirm if the action was successful or not.
     - Default the system security settings using a DTE cable 135.

Defaulting the Security on a pre-8.0 IP Office Basic Edition System

In order to allow the security changes necessary for an existing system to support IP Office Web Manager after being upgraded to IP Office Release 8.0 or higher, the system must be reset to the default password before being upgraded. This can be done using IP Office Manager or phone based administration.

Using IP Office Manager

1. Start IP Office Manager 56 and receive the configuration from the IP Office system.
2. On the Manager home page, select **Change Remote / Administration Password.**
3. Enter ***password***, the pre-8.0 default, and click **OK**.

Using Phone Based Administration

Refer to the IP Office Basic Edition - Quick Mode Phone Based Administration manual. The system administration function #730 is used to set the security password. This function should be used to set the password back to ***password***.

5.2 Displaying a System's IP Address

Logging in 85 to the system using web management requires its IP address. If the system has Avaya telephones connected to it, the following methods can be used to display the current IP address being used by the system.

Using a DS or ETR Phone to Display the System's IP Address

1. With the phone idle, press **Feature** and then dial ***591***. The IP address of the system is displayed.

Using an M-Series or T-Series Phone to Display the System's IP Address

1. With the phone idle, press **Feature** and then dial ***9*81***. The IP address of the system is displayed.

5.3 PC Connection

IP connection to the system is done using the **LAN** port on the back of the system's control unit. During installation, it uses the LAN port to request an IP address from any DHCP server. If there is a DHCP server on the customer's network, that server will give the system an IP address.

If the system was not able to get an address using DHCP when it was first started, it will use the default address ***192.168.42.1/255.255.255.0*** for the LAN port. However, the system is still defaulted as a DHCP client and so will request an address again if it is restarted. Therefore if the system has been started before being connected to the customer's network, it can still be connected and restarted in order to obtain an address from the network.

Normal Network Connection

If the system's control unit is already connected to the customer's network, it probably has an address that is valid on that network, that is an address obtained by DHCP or an address set by the installer.

1. Use the display 84 of an Avaya phone on the system to find out the IP address.
2. Connect your own PC to the customer's network. Most PCs are configured to obtain an IP address using DHCP.
3. Start your web browser and login 85 using the system's address.

LAN Port Direct Connection

If the system is not connected to a customer network, it is most likely using its default address ***192.168.42.1/255.255.255.0***. Connection in this case requires you to know how to temporarily change the IP address settings of your PC.

1. Use the display 84 of an Avaya phone on the system to find out the IP address.
2. Set the IP address of your PCs network port to be a valid address on the same network address range.
   - For example, if the system is using its default address, set your PCs address to 192.168.42.20/255.255.255.0.
3. Connect your PC to the LAN port on the system.
4. Start your web browser and login 85 using the system's address.

WAN Port Direct Connection (Fallback Method)

The WAN port on the rear of the system's control unit is not normally used for any function. However it can be used for web management if it not possible to determine the system's IP address by any other method: For example if the system was given a fixed IP address but only has analog extensions which cannot be used to display that current address.

The WAN port address is always 192.168.43.1/255.255.255.

1. Set the IP address of your PCs network port to be a valid address on the same network address range. For example, set your PCs address to 192.168.43.20/255.255.255.0.
2. Connect your PC to the WAN port on the system.
3. Start your web browser and login 85 using the address 192.168.43.1/255.255.255.0.
4. Once you have logged in, check the actual address of the LAN port. It is shown on the **Switch** menu form.

5.4 Logging In

In order to login you need to know the IP address 84 of the system and to connect your PC 84 to it or the network which it is already on.

1. In a web browser, enter the IP address of the system in the format *http://<IP Address>*, for example ***http://192.168.42.1***.
2. The web page shown displays a number of links, select the ***IP Office Web Management*** link.
   - As an alternative you can enter the full address for web management directly. Enter the following address into the browser's address bar, replacing *<IP Address>* with the system's IP address. Note that the address is case sensitive: *https://<IP Address>:8443/webmanagement/WebManagement.html*
3. If the browser responds with a security warning, follow the menu settings displayed for continuing with the connection.
4. When the login menu is displayed, enter the user name and password for system administration. The defaults are ***Administrator*** and ***Administrator***.

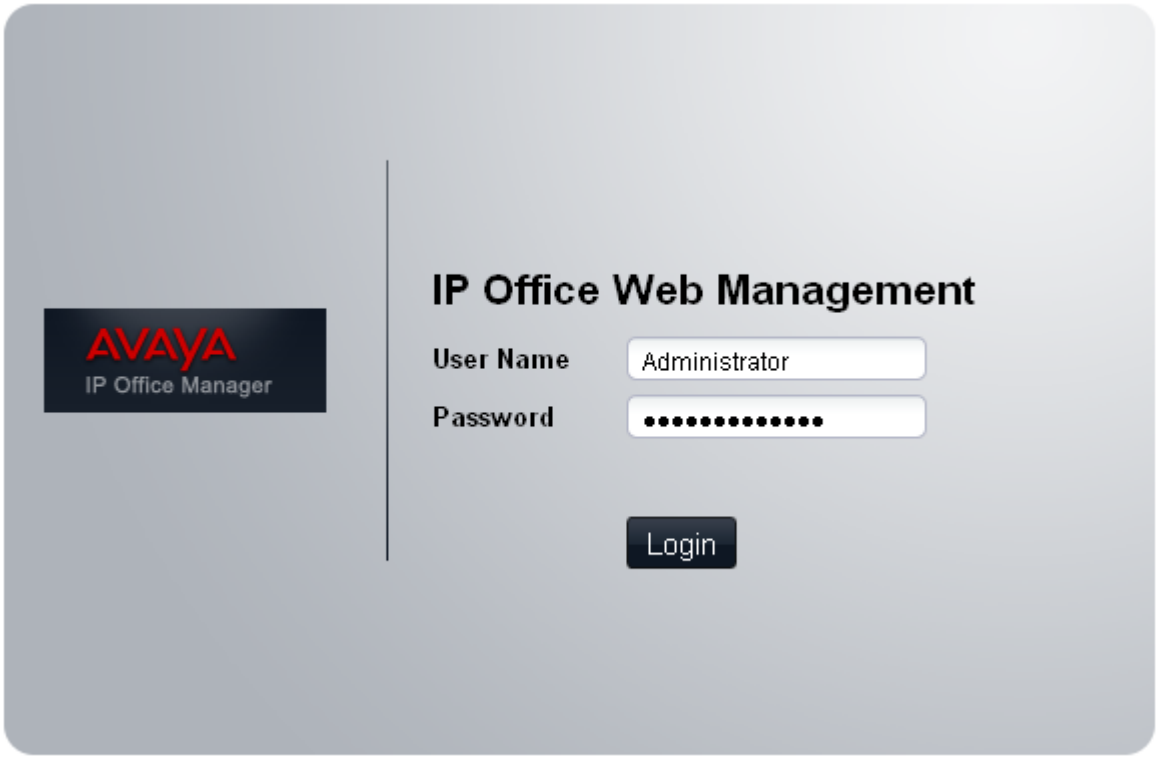

5. Click on **Login**.
6. The home page for the system web management is displayed.
   - Do not use the browsers forward, back and other history functions while in web management. Doing so will require you to log in again.
   - Pages in web management cannot be bookmarked.
   - You must remember to log out 96 when you have finished editing the configuration. The browser is not automatically logged out after any duration.

5.5 Changing the Default Passwords

Once you have logged in, you can change the password used for the login. For a new system you should do this for both the ***Administrator*** and for the ***BusinessPartner*** logins. Failure to do this leaves the system insecure to unauthorized configuration changes.

- Configuration access using IP Office Manager uses the Administrator account password.
- Configuration access using IP Office Web Manager uses both the same Administrator account password used for IP Office Manager but also uses a BusinessPartner account password.
- Configuration access using phone based administration can be done by the first two extensions in the system. By default there is no password set to restrict access to phone based administration of the system. For M-Series and T-Series phones, if a password is set that password is used to restrict phone based administration. For other types of phone used for phone based administration, no password is required.

Changing Your Name and Password Settings

1. Click **System** in the menu bar and select **User Preferences**.

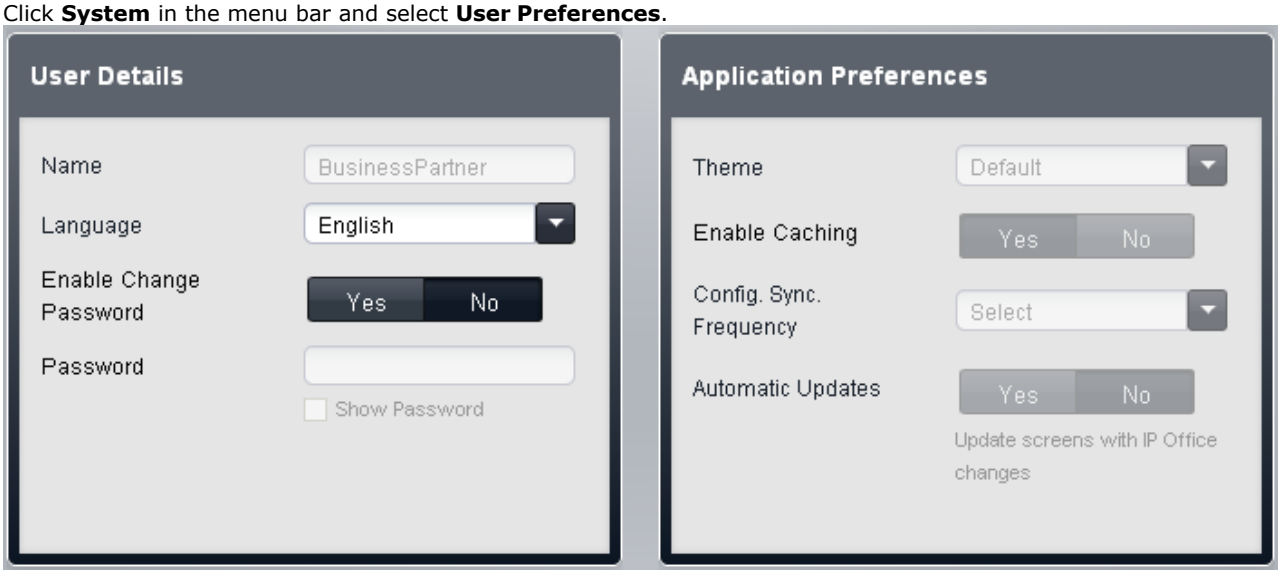

2. Change the setting of **Enable Change Password** to ***Yes***.
3. Enter the new password in the **Password** field.
4. Click **Save**.
5. You will be prompted to confirm the change, click **OK**.
6. Once the change has been confirmed as being saved successfully, click **Logout**.
7. Login in again but this time using the other default account and repeat the process to change the password for that account.

Changing the System Password

1. Click **System** in the menu bar and select **Switch**.
2. In the **Password** field, enter a 4 digit password. That password is then used to restrict access to various functions by phone users including phone based administration of the system from M-Series and T-Series phones.
3. Click **Save**.

5.6 Setting the System Mode (PBX or Key)

The system can operate in either of two modes; ***PBX*** or ***Key***. The selected mode affects the system's outgoing call routing and incoming call routing settings.

Default Setting

The default setting for the system's **Mode** is determined by the type of SD card installed in the system.

- **IP Office U-Law SD Card**
  A system fitted with this type of card will default to U-Law telephony. For pre-IP Office Release 7.0 software, the system will default to IP Office standard mode. For IP Office Release 7.0+, the system will default to IP Office Basic Edition - Quick Mode ***Key System*** operation. Intended for North American locales.
- **IP Office A-Law SD Card**
  A system fitted with this type of card will default to A-Law telephony. For pre-IP Office Release 7.0 software, the system will default to IP Office standard mode. For IP Office Release 7.0+, the system will default to IP Office Basic Edition - Quick Mode ***PBX System*** operation. Intended for locales outside North America.
- **IP Office Partner Edition SD Card**
  A system fitted with this type of card will default to U-Law telephony and IP Office Basic Edition - PARTNER® Mode ***Key System*** operation. Supported only in North American locales.
- **IP Office Norstar Edition SD Card**
  A system fitted with this type of card will default to A-Law telephony and IP Office Basic Edition - Norstar Mode ***Key System*** operation. Supported only in Middle East and North African locales.

Changing the System Mode

- **! WARNING**
  Changing this setting requires the system to be restarted for the change to take effect. This will end all calls currently in progress.
- In addition, any existing button programming is removed and all buttons are defaulted according to the requirements of the selected mode.

1. Click on **System** in the menu bar and then click on **Switch**.
2. Change the currently selected **Mode** to the required setting; ***PBX*** or ***Key***.
   - **Key**
     The **Number of Lines** setting is used to automatically assign line appearance buttons on all extensions with programmable buttons. To make external calls the user should select an available line appearance button. Outbound call routing is determined by which line appearance button the user selects before dialing or by the user's automatic line selection settings.
   - **PBX**
     No line appearances are automatically assigned to programmable buttons. The **Outside Line** setting is used to set the dialing prefix that indicates that the call is an external one for which an available line should be seized. The **Alternate Route Selection** settings are used to determine which lines are used for each outgoing call. Line appearance buttons can also still be configured for making and answering external calls.
3. Click **Save**.

5.7 Setting the System Country

The system's country setting must be correctly set. It is used to adjust the system operation to match the requirements of telephone service providers and users in that country. Not setting the country correctly may cause problems.

Setting the System Country

1. Click on **System** in the menu bar and then click on **Switch**.
2. The **Country** field is used to select the country.
   - The supported countries are ***Argentina***, ***Australia***, ***Bahrain***, ***Belgium***, ***Brazil***, ***Canada***, ***Chile***, ***China***, ***Customize***, ***Denmark***, ***Egypt***, ***Finland***, ***France***, ***Germany***, ***Greece***, ***Hong Kong***, ***Hungary***, ***Iceland***, ***India***, ***Italy***, ***Korea***, ***Kuwait***, ***Mexico***, ***Netherlands***, ***New Zealand***, ***Norway***, ***Oman***, ***Pakistan***, ***Peru***, ***Poland***, ***Portugal***, ***Qatar***, ***Russia***, ***Saudi Arabia***, ***Singapore***, ***South Africa***, ***Spain***, ***Sweden***, ***Switzerland***, ***Taiwan***, ***Turkey***, ***United Arab Emirates***, ***United States***, ***Venezuela***.
   - When ***Default*** is selected, the following additional fields are available:

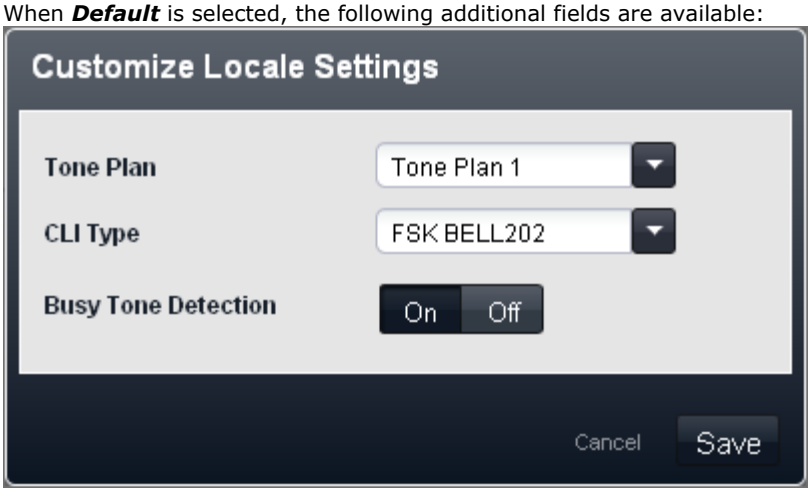

   - **Tone Plan:** *Default = Tone Plan 1*
     Select a tone plan to be used for different ringing signals such as dial tone and ring tone.
   - **CLI Type:** *Default = FSK V23*
     Set the method for passing caller ID information to analog extensions. The options are ***DTMF***, ***FSK Bell 202*** or ***FSK V23***.
   - **Busy Tone Detection:** *Default = Off*
     Enable or disable the use of busy tone detection for call clearing.
3. Click **Save**.

5.8 Setting the System Language

Changing the system's country setting 88 also automatically changes the systems language to the best match. The language is used as follows:

- The messages and menus displayed on phones will be changed to match the language if possible.
- The language used by the systems voicemail services is changed to match the system language if possible.
- For each user, their own language settings can be changed using the user's language setting. This affects the language used on their phone's display and for mailbox access prompts.
- For each auto attendant, the system language setting can be overridden by the auto attendant's own language setting.

Setting the System Language

1. Click on **System** in the menu bar and then click on **Switch**.
2. The **Language** field is used to select the system language. Possible languages are:
   - ***Arabic***, ***Brazilian Portuguese***, ***Canadian French***, ***Cantonese***, ***Danish***, ***Dutch***, ***Finnish***, ***French***, ***German***, ***Italian***, ***Korean***, ***Mandarin***, ***Norwegian***, ***Portuguese***, ***Russian***, ***Spanish***, ***Spanish (Argentinean)***, ***Spanish (Latin)***, ***Spanish (Mexican)***, ***Swedish***, ***UK English***, ***US English***.
3. Click **Save**.

5.9 Setting the Number of Lines

For systems with their **Mode** 87 set to ***Key***, when the system's **Number of Lines** setting is changed, the following other changes to the configuration occur:

- The number of line appearance buttons set on all user extensions is reset to match the Number of Lines values. The buttons are assigned from button 03 upwards and will overwrite any existing buttons that are set to become line appearance buttons.
- The user's automatic line selection settings are reset to match the number of lines.

When a system is first installed, the **Number of Lines** setting is automatically set to match the number of analog trunks present in the system. This means that all analog lines are automatically added as line appearances and added to the automatic line selection settings of users. If no analog trunks are present when the system is installed, the setting defaults to the first 5 lines.

Changing the Number of Lines Setting

- **! Warning**
  If the **Number of Lines** value is changed, all existing line appearance buttons and automatic line selection settings are overwritten. The existing functions on other programmable buttons are also overwritten if they are in the range of buttons now specified for lines. Therefore it is recommended that this setting is only changed when a system is first installed.

1. Click on **System** in the menu bar and then click on **Switch**.
2. In the **System Parameters** panel, change the **Number of Lines** setting to the required value.
3. Click **Save**.

5.10 Adding Licenses

Various IP Office features and applications require entry of licenses 245 into the system's configuration. The licenses are unique 32-character codes based on the feature being activated and the serial number of the feature key dongle 192 installed with the IP Office system.

The serial number is printed on the feature key dongle and prefixed with **FK**. It can also be viewed in the system configuration using IP Office Manager.

- For IP500 V2 systems, the feature key dongle takes the form of an SD card inserted into the control unit. The card is a mandatory item for these systems even if they use no licensed features.

When a license is entered into the IP Office configuration, the following information is shown.

- **Status**
  The status, which is ***Unknown*** until the configuration file is sent back to the IP Office system.
  - ***Unknown***
    This status is shown for licenses that have just been added to the configuration shown in IP Office Manager. Once the configuration has been sent back to the IP Office and then reloaded, the status will change to one of those below.
  - ***Valid***
    The features licensed can be configured and used.
  - ***Invalid***
    The license was not recognized. It did not match the serial number of the Feature Key.
  - ***Dormant***
    The license is valid but is conditional on some other pre-requisite that is not currently meet.
  - ***Obsolete***
    The license is valid but is one no longer used by the level of software running on the system.
  - ***Expired***
    The license has gone past its expiry date.
- **License**
  The name of the licensed feature. This may differ from the ordered RFA name.
- **Instances**
  Depending on the license, this may be the number of ports enabled or number of simultaneous users of the licensed feature. Sometime the number of instances is specified in the license name.
- **Expires**
  Most purchased licenses have no expiry setting. For some features, trial licenses may be available which will have an expiry date.

Checking the System Feature Key Number

The Feature Key number of the System SD card installed in the system is used to generate and validate licenses added to the system configuration. When you log into a system, the **Feature Key** number is shown in the **Hardware Installed** panel on the **Home** page.

Adding Licenses

Firstly check that the licence information that you have been supplied has been issued against the Feature Key number of the System SD card installed in the system. Licenses issued against another Feature Key number will be invalid.

1. Click **System** in the menu bar and then click **License**.
2. The current licenses entered in the system are shown. Click **Add License**.

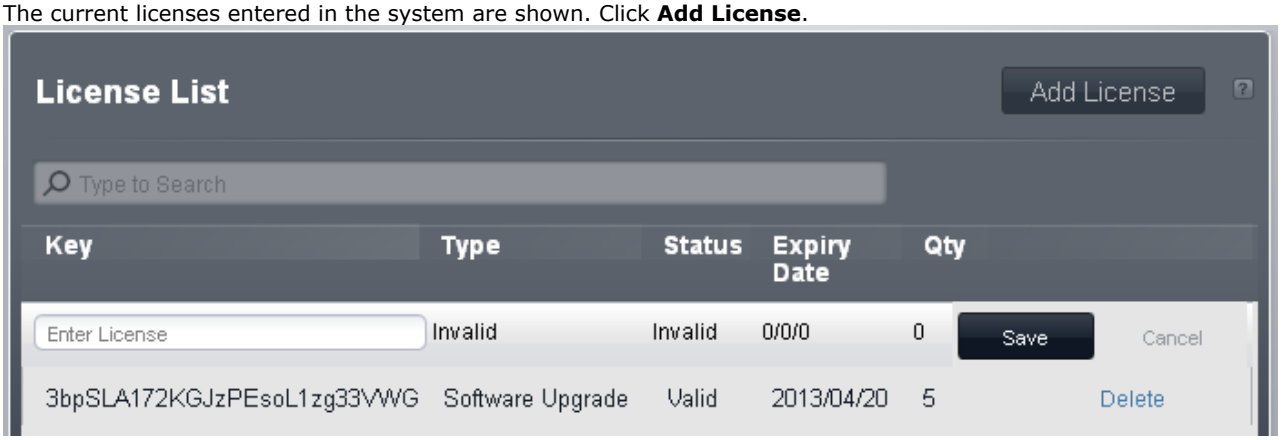

3. Cut and paste the license key supplied into the field for the new key.
4. Click **Save**.

5.11 Changing Network Settings

IP connection to the system is done using the **LAN** port on the back of the system's control unit. During installation, it uses the LAN port to request an IP address from any DHCP server. If there is a DHCP server on the customer's network, that server will give the system an IP address.

If the system was not able to get an address using DHCP when it was first started, it will use the default address ***192.168.42.1/255.255.255.0*** for the LAN port. However, the system is still defaulted as a DHCP client and so will request an address again if it is restarted. Therefore if the system has been started before being connected to the customer's network, it can still be connected and restarted in order to obtain an address from the network.

The **WAN** port on the back of the system's control unit is not normally used. It is only used as a emergency method to connect a PC in order to configure the system, see PC Connection 84.

Changing the System's Network Settings

1. Click on **System** in the menu bar.
2. The network address settings for the system's LAN port are shown in the **Network Settings** panel:
   - **Receive IP Address Via DHCP Server:** *Default = Yes.*
     This setting controls whether the system acts as a DHCP client or uses a fixed IP address.
     - If enabled, the system acts as a DHCP client and requests IP address details for its LAN port when the system is started.
       - If it receives a response, the address details it has been given by the DHCP server are shown in the field below but cannot be adjusted.
       - If it does not receive a response, it default to using the address 192.168.42.1. It is still a DHCP client and will request an address again when it is next restarted.
     - If not enabled, the system uses the IP address values set in the fields below.
   - **System IP Address:** *Default = 192.168.42.1*
     Enter the IP address that the telephone system should use if **Receive IP Address Via DHCP Server** is not selected. If **Receive IP Address Via DHCP Server** is selected, this field is greyed out but does display the IP address that the system is currently using.
   - **Subnet Mask:** *Default = 255.255.255.0*
     Enter the Sub-Net Mask that the telephone system should use if **Receive IP Address Via DHCP Server** is not selected. If **Receive IP Address Via DHCP Server** is selected, this field is greyed out but does display the IP address that the system is currently using.
   - **Default Gateway:** *Default = 0.0.0.0*
     Enter the **Default Gateway** that the telephone system should use if **Receive IP Address Via DHCP Server** is not selected. If **Receive IP Address Via DHCP Server** is selected, this field is greyed out but does display the IP address that the system is currently using.
3. Once the settings are set as required, click **Save**.

5.12 Setting the Emergency Numbers

You can enter 10 emergency phone numbers into this list. This list is applied to all users and overrides any dialing restrictions that would otherwise be applied to the users.

By default the normal emergency numbers for the system locale are automatically added and should not be removed.

To Edit the Emergency Numbers List

1. From the menu bar, click on **User**.
2. The **Outgoing Calls** panel next to the list of users gives a summary of the currently configured lists. Click on the edit icon.
3. From the **List Management** table, select the **View Details** link of the list that you want to edit.

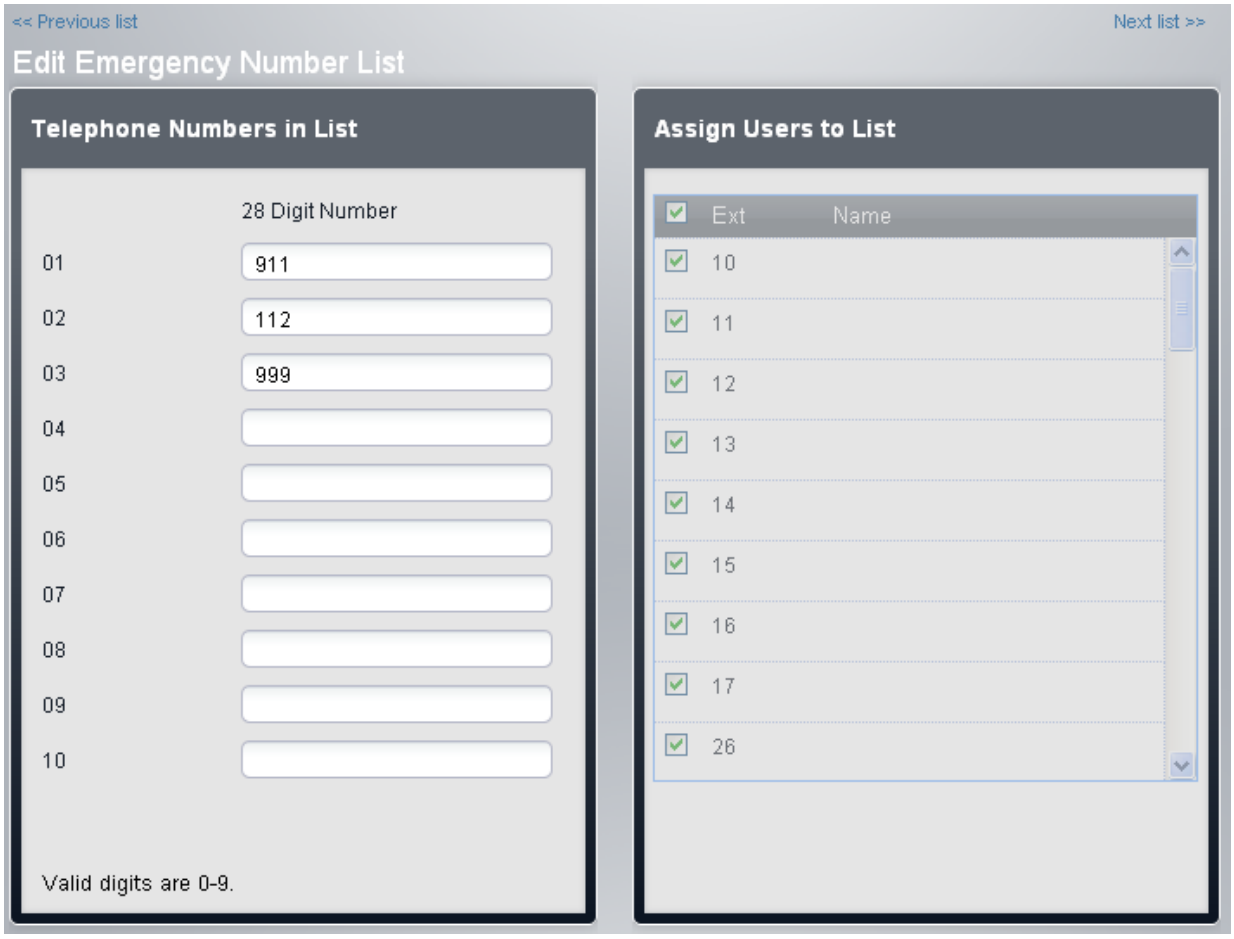

- The **Telephone Numbers in List** panel displays the allowed numbers. Edit the numbers as required.
- The **Assign Users to List** panel is used to set which users are assigned to the list.

4. When completed click **Save**.
5. To access another list click on **<< Previous List** or **Next List >>**. Alternatively click on **<< Back** to return to the table of all the lists.

5.13 Setting the Outside Line Prefix

This option is only used with systems set to PBX mode. It sets the digit which, when dialed at the start of a number, indicates that the call is intended to be external. The options are to use ***0***, ***9*** or no prefix.

Note that the setting also changes the digits used for calls to the first extension on the system. Normally, in addition to the extension's extension number, the number 0 can be used to call that extension. If the number 0 is set as the outside line prefix, the number 9 is used for the first extension.

Setting the System's Outside Line Prefix

1. Click on **System** in the menu bar.
2. In the **System Parameters**, set the **Outside Line** setting to the required option.
   - ***9 (Operator is 0)***
     The prefix 9 is used for external calls. The digit 0 is used for calls to the operator extension (the first extension in the system). This is the default setting for systems with the **Country** setting ***United States*** .
   - ***None***
     No prefix is used for external calls. Any dialing that does not match an internal dial plan number is assumed to be an external call. This is the default setting for systems with the **Country** setting other then ***Germany*** or ***United States***. The digit 0 is used for calls to the operator extension (the first extension in the system).
   - ***0 (Operator is 9)***
     The prefix 0 is used for external calls. The digit 9 is used for calls to the operator extension (the first extension in the system). This is the default setting for systems with the **Country** setting ***Germany***.
3. Click **Save**.

5.14 Music on Hold

The phone system supports an external music on hold source. This connects to the **Audio** port on the rear of the system's control unit. You can configure whether the input to this port is played to callers when they are put on hold.

The music on hold input can also be played to callers being transferred rather than ringing tone. That behaviour is controlled by the system's **Ring on Transfer** setting.

The port is a 3.5mm stereo jack socket suitable for use with the most standard audio leads and connection to the 'headphone' output socket of most audio systems. The use of a 'headphone' socket allows simple volume adjustment. Connection via a 'Line Out' socket may require additional equipment in order to adjust the volume level.

Enabling Music on Hold

1. Click **System** in the menu bar and then click **Auxiliary Equipment**.
2. In the **Music on Hold** panel, select the required option.
   - ***On***
     This is the default. If enabled, the system will use the external music source connected to the phone system for its music on hold.
   - ***Off***
     If not enabled, the system provides a double beep tone repeated every 5 seconds.
3. Click **Save**.

Using Music on Hold for Call Transfers

Calls being transferred normally hear ringing while the transfer process is in progress. This can be changed to hearing the system's music on hold source.

1. Click on **System** in the menu bar and then click on **Switch**.
2. Click on the **Advanced** button.
3. The **Ring on Transfer** setting controls whether callers hear ringing or music on hold while being transferred.
4. Click **Save**.

5.15 Automatic Line Selection

For systems running in **Key** mode, when a user makes a call, they can indicate if it is an external or internal call by first pressing a line appearance button or an intercom button respectively. If the user just lifts the handset without first pressing a button, the system uses the user's automatic line selection settings (ALS) to determine which available button to seize for the call.

By default, each extensions' automatic line selection list contains line buttons in sequence from line 1 up to the system's **Number of Lines** setting and then the intercom or call appearance buttons.

Manually Editing a User's Automatic Line Selection Setting

1. Click on **User** in the menu bar.
2. Highlight the required user by clicking on them.
3. Click on the edit icon in the **Button Programming** panel on the right.
4. The current automatic line selection settings are shown in the **ALS Programming** panel.

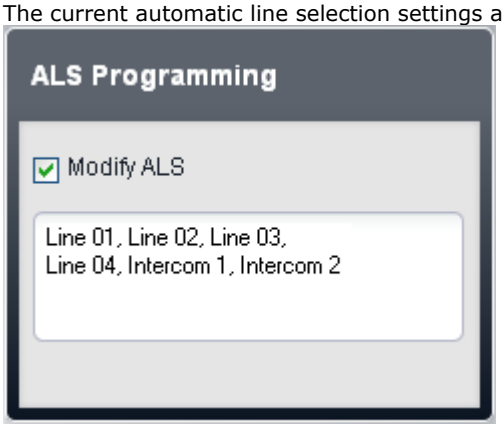

5. Select **Modify ALS**.
6. In the text box, enter the sequence of line and intercom buttons that should be use for automatic line selection. Separate each entry with a comma.
   - For a line button, enter ***Line XX*** where ***XX*** is replaced by the line number.
   - For an intercom button, enter ***Intercom Y*** when ***Y*** is replaced by the intercom button number.
7. Click **Save**.

5.16 Logging Out

You must remember to log out when you have finished editing the configuration. The browser is not automatically logged out after any duration.

While simply closing the browser will end the web management session, it may be before all the settings that have been changed have been saved to the system. Therefore it is recommended that you always end a web management session by using the log out process below.

Logging Out

1. Click on the **Logout** link shown at the top-right of the browser window.
2. In the confirmation menu, click **Yes**.
3. Your web management session is ended and the log in screen is shown.

Chapter 6.

Initial Configuration Using IP Office Manager

6. Initial Configuration Using IP Office Manager

This section covers basic configuration changes required for IP Office systems if using the IP Office Manager application. This covers just the basic configuration, the full range of configuration possible through IP Office Manager is covered in the IP Office Manager manual.

- **Entering Licenses** 99
  Enter licenses for features that require them.
- **Setting the System Locale** 100
  Setting the correct system locale affects a wide range of settings including trunk settings. The correct locale must be set for a system to operate correctly.
- **Select Key System or PBX System Mode** 101
  The system can run in key system or PBX system modes.
- **Extension Numbering** 104
  Change the numbering mode used by the system between 2-digit and 3-digit. Renumber the user extensions if required.
- **Change the Default Passwords** 103
  The default passwords used for configuration access to the IP Office system should be changed.
- **Change the IP Address/DHCP Settings** 102
  If necessary, the IP address and DHCP mode of the IP Office system can be changed.

6.1 Entering Licenses

For IP500 V2 control units, license files can be pre-loaded onto the System SD card. Those licenses 245 will then be merged with the configuration when the control unit is powered up. Otherwise for all control units, licenses are entered into the configuration using IP Office Manager. In addition to the methods below, license can also be added by placing the addition licenses as a text file on the System SD card.

You must ensure that the licenses being entered have been issue against the **FK** serial number of the System SD card fitted in the system. Each license is a unique 32-character string based on the feature being licensed and the serial number of the SD card plugged into the system control unit.

Entering licenses manually is liable to errors caused by miskeying the correct 32-character string.

Entering Licenses

1. Start IP Office Manager 56 and receive the configuration from the IP Office system.
2. From the **Admin Tasks** list select **System** and then License Management.
   - If the **Admin Tasks** list is not visible, select **View** and deselect **Hide Admin Tasks**.
3. It is recommended that you use the **Import** control to import licenses from a file. Alternatively the license keys can be cut and pasted into the Key field.
4. Click **Apply**.
5. Click on the save icon and save the updated configuration back to the IP Office system.
6. Use Manager to receive the configuration again and check that the status of the license. It should now be ***Valid***.

6.2 Setting the System Locale

Setting the correct system locale 38 affects a wide range of settings including trunk settings. The correct locale must be set for a system to operate correctly. It will also set the default language used for phone displays and for voicemail prompts. However language settings can be changed separately from the system locale if different language operation is required.

- **! WARNING**
  This process will require the IP Office system to reboot in order to complete the process. Any current calls and services will be ended by the reboot.
- This process can be performed through phone based administration 51 from either of the first two systems in the system. For details, refer to the IP Office Basic Edition - Quick Mode Phone Based Administration manual.

Setting the System Locale

1. Start IP Office Manager 56 and receive the configuration from the IP Office system.
2. On the Manager home page, select **Change System Settings** (or from the **Admin Tasks** list select **System**).
3. Use the **Country** drop down list to select the required locale.

   - ***Argentina***
   - ***Australia***
   - ***Bahrain***
   - ***Belgium***
   - ***Brazil***
   - ***Canada***
   - ***Chile***
   - ***China***
   - ***Colombia***
   - ***Denmark***
   - ***Egypt***
   - ***Finland***
   - ***France***
   - ***Germany***
   - ***Greece***
   - ***Hong Kong***
   - ***Hungary***
   - ***Iceland***
   - ***Ireland***
   - ***India***
   - ***Italy***
   - ***Japan***
   - ***Korea***
   - ***Kuwait***
   - ***Malaysia***
   - ***Mexico***
   - ***Morocco***
   - ***Netherlands***
   - ***New Zealand***
   - ***Norway***
   - ***Oman***
   - ***Pakistan***
   - ***Peru***
   - ***Poland***
   - ***Portugal***
   - ***Qatar***
   - ***Russia***
   - ***Saudi Arabia***
   - ***Singapore***
   - ***South Africa***
   - ***Spain***
   - ***Sweden***
   - ***Switzerland***
   - ***Taiwan***
   - ***Turkey***
   - ***United Arab Emirates***
   - ***United Kingdom***
   - ***United States***
   - ***Venezuela***

   Use the **Language** drop down list to select the default language for the system. Click **Apply**.
4. If the correct set of language prompts are not present on the System SD card, IP Office Manager will display an error. The **Add/Display VM locales** option (*File* | *Advanced* | *Add/Display VM locales*) can be used to upload the language prompts from IP Office Manager.
5. Click on the save icon and save the updated configuration back to the IP Office system.

6.3 Select Key System or PBX System Mode

IP Office Basic Edition - Quick Mode mode systems can operate in one of two ways, as a key system or as a PBX system. The mode adopted by a IP Office Basic Edition - Quick Mode system depends on the System SD card. Systems with an IP Office U-Law card default to key system operation. Systems with an IP Office A-Law card default to PBX system operation.

- This process can be performed through phone based administration 51 from either of the first two systems in the system. For details, refer to the IP Office Basic Edition - Quick Mode Phone Based Administration manual.

Key Mode vs PBX Mode - Quick Summary

Key Mode	PBX Mode
• The first 2 programmable buttons are used as intercom buttons. • Internal calls are made and answered using the intercom buttons. • External calls are made and answered using line appearance buttons. • The line used for outgoing external calls is determined by the line button pressed. • Automatic line selection defaults to the analog lines present and then the 2 intercom buttons.	• The first 3 programmable buttons (2 on ETR phones) are used as call appearance buttons. • Internal calls are made and answered using the call appearance buttons. • External calls are made and answered using the call appearance buttons. • The line used for outgoing external calls is determined from the number dialed. • Automatic line selection defaults to the 3 call appearance buttons (2 on ETR phones).

- **! WARNING**
  This process will require the IP Office system to reboot in order to complete the process. Any current calls and services will be ended by the reboot.

Selecting Key or PBX System Mode

- This option can be done through phone based administration 51.

1. Start IP Office Manager 56 and receive the configuration from the IP Office system.
2. On the Manager home page, select **Change System Settings** (or from the **Admin Tasks** list select **System**).
3. Use the **System Mode** drop down list to select the required mode.
4. Click **Apply**.
5. Click on the save icon and save the updated configuration back to the IP Office system.

6.4 Changing the IP Address Settings

When a new or defaulted IP Office is switched on, the control unit will make a DHCP requests for IP address settings for its LAN port (the WAN port should not be used).

- If the IP Office receives a response from a DHCP server, it will configure itself as a DHCP client using the address details provided by the DHCP server.
- If the IP Office does not receive a response from a DHCP server, it will still configure itself as a DHCP server but using the following default address details:

Network Settings	LAN Port (LAN1)
IP address	192.168.42.1.
IP Mask	255.255.255.0
DHCP Mode	Client

If the IP address and DHCP mode settings are not suitable for the customers network they should changed. Note that changing the IP Office's IP address settings requires it to restart.

- **! WARNING**
  This process will require the IP Office system to reboot in order to complete the process. Any current calls and services will be ended by the reboot.

Changing IP Address Settings

1. Start IP Office Manager 56 and receive the configuration from the IP Office system.
2. On the Manager home page, select **Change System Settings** (or from the **Admin Tasks** list select **System**).
3. To use a fixed IP address, deselect **Receive IP Address Via DHCP Server**. Then in the **IP Address (LAN1)** and **Sub-Net Mask (LAN1)** fields, enter the required IP address settings.
4. Click **Apply**.
5. Click on the save icon and save the updated configuration back to the IP Office system.

6.5 Changing the Default Passwords

You should change the default passwords used for configuration access to the IP Office system. Failure to do this leaves the system insecure to unauthorized configuration changes.

- System configuration access is possible via a number of methods:
- Configuration access using IP Office Manager uses an ***Administrator*** account password.
- Configuration access using IP Office Web Manager uses both the same ***Administrator*** account password used for IP Office Manager but also uses a ***BusinessPartner*** account password.
- Configuration access using phone based administration can be done by the first two extensions in the system. By default there is no password set to restrict access to phone based administration of the system. For M-Series and T-Series phones, if a password is set that password is used to restrict phone based administration. For other types of phone used for phone based administration, no password is required.

Changing the Remote Administration Password

This password controls remote and local access to the system using IP Office Manager. The default administration password is ***Administrator***.

1. Start IP Office Manager 56 and receive the configuration from the IP Office system.
2. On the Manager home page, select **Change Remote / Administration Password.**
3. Enter the new password and and click **OK**.

Changing the BusinessPartner Password

The remote administrator password above is used for the non-deletable Administrator account used with both IP Office Manager and IP Office Web Manager. For IP Office Web Manager there is an additional non-deletable default account that has full system configuration access and so for which the default password should be changed.

In order to ensure that configuration access to the system is secure, even if IP Office Manager is your preferred configuration tool, you must login to IP Office Web Manager 85 using the ***BusinessPartner*** account and change the password 86 for that account.

Changing the System Password

The system password is used from phones to authorize overriding night service and other settings such as call barring. If a system password is set, you must enter the system password before you can alter selected settings. By default no system password is set.

The system password is also used to restrict access to system administration from the first two extensions attached to the system.

1. Start IP Office Manager 56 and receive the configuration from the IP Office system.
2. On the Manager home page, select **Change System Settings** (or from the **Admin Tasks** list select **System**).
3. In the **System Password** field enter the password that should be used.
4. Click **Apply**.
5. Click on the icon and save the updated configuration back to the IP Office system.

6.6 Extension Numbering

IP Office Basic Edition - Quick Mode mode systems can use 2-digit or 3-digit numbering. In 2-digit systems, the user extensions are fixed as 10 to 57. In 3-digit systems the user extension are numbered 100 upwards by default but can be renumbered in the range 100 to 579.

In 2-digit mode, only 48 extensions are supported, in 3-digit mode a maximum of 100 extensions are supported. It is strongly recommended that these options are only used and changed on a newly installed system.

Changing the Numbering Mode

1. Start IP Office Manager and receive the configuration from the IP Office system.
2. Select **Tools | Extension Renumber**.

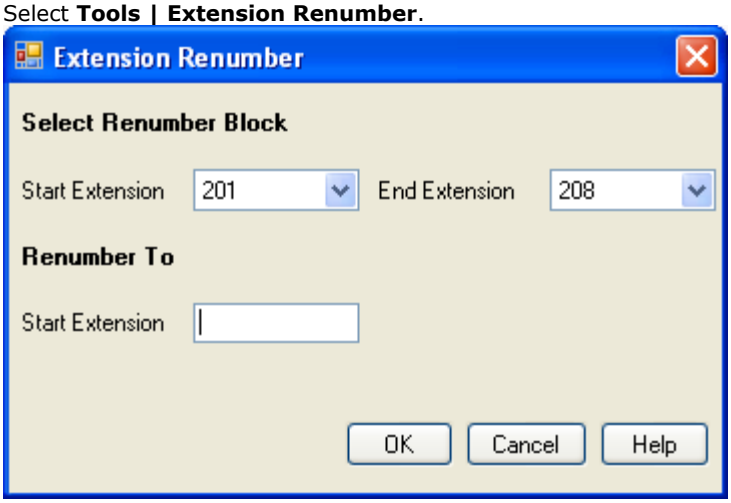

- **Default Numbering**
  Select whether the systems uses **2 Digit** or **3 Digit** extension numbering. In 2 digit systems, the user extensions are fixed as 10 to 57. In 3 digit systems the user extension are numbered 100 upwards by default but can be renumbered. In 2 digit mode only 48 extensions are supported, in 3 digit mode a maximum of 100 extensions are supported.
- **Renumber From/Renumber To**
  These options are available for systems set to 3 Digit numbering. They can be used to renumber select extensions.

3. Click on the save icon and save the updated configuration back to the IP Office system.

Chapter 7.
On-Boarding

7. On-Boarding

On-boarding is a process through which you can register an IP500 V2 system for remote support and maintenance from Avaya. The process of on-boarding is done using the IP Office Web Manager interface.

This section is a short summary of on-boarding. For full details on configure and administer SSL VPN services, see the Avaya IP Office SSL VPN Solutions Guide. You can download the guide from http://support.avaya.com.

Summary Steps

1. Login to IP Office Web Manager
2. **On-Board the System**
   This process has 3 main steps:
   a. **Obtain an Inventory File**
      From the system export a file that contains an inventory of the equipment within the system. This file is required in order to register the system for support.
   b. **Register the System**
      Register the system on the Avaya Global Registration Tool website and upload the system's inventory file. Once the system is registered, an on-boarding file is provided for the system. This file contains configuration settings for the SSL VPN service link.
   c. **Upload an On-Boarding File**
      Upload the on-boarding file to the system. The information within the file is used to update the system's configuration.

7.1 Logging In to Web Manager

In order to login you need to know the IP address of the system and to connect your PC to it or the network which it is already on.

Logging on to IP Office Web Manager

1. In a web browser, enter the IP address of the system in the format *http://<IP Address>*, for example ***http://192.168.42.1***.
2. The web page shown displays a number of links, select the ***IP Office Web Management*** link.
   - As an alternative you can enter the full address for web management directly. Enter the following address into the browser's address bar, replacing *<IP Address>* with the system's IP address. Note that the address is case sensitive: *https://<IP Address>:8443/webmanagement/WebManagement.html*
3. If the browser responds with a security warning, follow the menu settings displayed for continuing with the connection.
4. When the login menu is displayed, enter the user name and password for system administration. The defaults are ***Administrator*** and ***Administrator***.

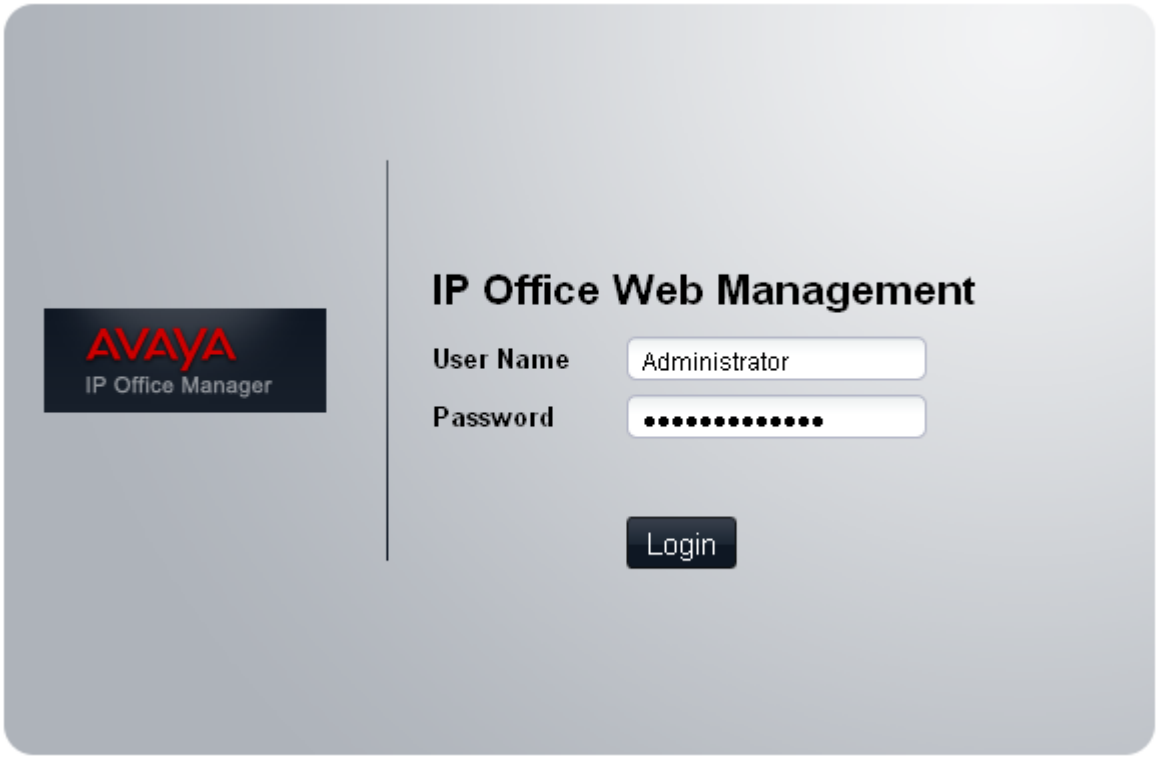

5. Click on **Login**.
6. The home page for the system web management is displayed.
   - Do not use the browsers forward, back and other history functions while in web management. Doing so will require you to log in again.
   - Pages in web management cannot be bookmarked.
   - You must remember to log out 96 when you have finished editing the configuration. The browser is not automatically logged out after any duration.

7.2 On-Boarding

1. Login 110 to IP Office Web Manager.
2. Select **Tool | On-boarding**. The On-boarding menu is displayed.

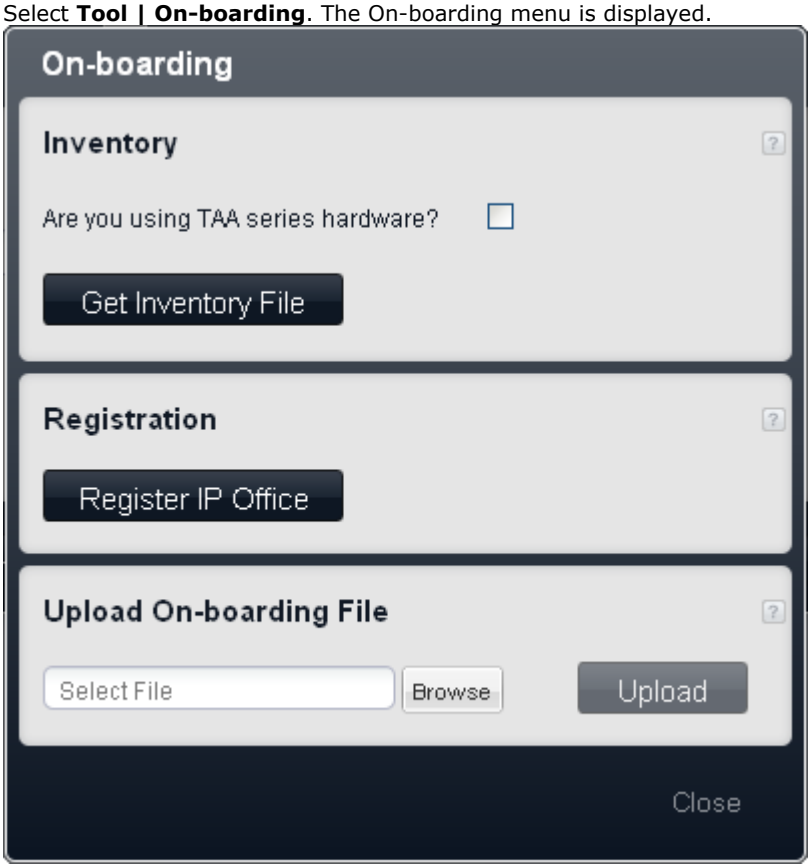

3. Click **Get Inventory File** to to download an inventory.xml file for the system. When you register the IP Office system for remote support, the inventory file is required as part of the registration and is uploaded to the Avaya Global Registration Tool (GRT) where the inventory data is populated in the Avaya Customer Support (ACS) database.
   - **Are you using TAA series hardware?**
     Systems purchased under US Federal Acquisition Regulations (FAR) must comply with the requirements of the Trade America Act (TAA). For various items of IP Office hardware there are TAA compatible variants. Select this option if the IP Office system includes TAA hardware. This is usually indicated by TAA appearing on the label on the back of the system control unit.
4. Click **Register IP Office** to register the system with the the Avaya Global Registration Tool (GRT) website.
5. Once the system is registered, you can download an on-boarding file for the system from the Avaya Global Registration Tool website. This file contains the settings required to establish an SSL VPN connection between the IP Office system and an Avaya VPN Gateway (AVG) server.
6. Use the **Upload On-boarding File** section to upload the on-boarding file to the system.

Chapter 8.
Additional Processes

8. Additional Processes

This section covers the following additional installation processes:

- Enabling IP Office Web Manager 115
- Switching Off an IP Office System 116
- Rebooting an IP Office System 117
- Memory Card Removal 118
- Changing Components 120
- Upgrading the IP Office Software 122
- Out of Building Extensions 31
- Using the External Output Port 130
- Reset Button Usage 131
- AUX Button Usage 131
- DTE Port Maintenance 132

8.1 Enabling IP Office Web Manager

For Release 8.0+, systems running in IP Office Basic Edition - Quick Mode, IP Office Basic Edition - PARTNER® Mode or IP Office Basic Edition - Norstar Mode mode can be configured via web browser. For Release 8.1, IP Office Web Manager is also used for the on-boarding of all IP500 V2 systems for Avaya support and maintenance.

Access to the system is via its IP address and then selecting the ***IP Office Web Management*** link. This documentation covers the recommended initial configuration 82 that can be done via web based management. Full use of web based management is covered in the IP Office Basic Edition Web Base Management manual.

In order to use IP Office Web Manager, a number of criteria as listed below must be met. Most of these are applied automatic to a new system installed with IP Office Release 8.0 or higher. However, for systems being upgraded to IP Office Release 8.0 or higher, additional upgrade steps may be required.

Enabling IP Office Web Manager

1. The IP Office Web Manager files must be present on the System SD card. This can be done in a number of way:
   - By selecting to include those files when prompted to do so while recreating the IP Office SD card 145 using IP Office Manager.
   - By selecting **Upload System Files** when upgrading the system using IP Office Manager.
2. The IP Office system security must allow IP Office Web Manager operation:
   - This is done automatically for any new system installed with IP Office Release 8.0 or higher software.
   - This is done automatically for any existing pre-IP Office Release 8.0 system during the upgrade if the system is set to use the pre-IP Office Release 8.0 default password of ***password***.
   - For any system upgraded to IP Office Release 8.0 without first being set back to the default password, either:
     - Using IP Office Manager:
       1. If not already done, select **View | Advanced View**.
       2. Select **File | Advanced | Erase Security Settings (Default)**.
       3. From the **Select IP Office** dialog, select the required system and click **OK**.
       4. Enter the user name **Administrator** and the password for that account (by default for a pre-IP Office Release 8.0 system: ***password***).
       5. IP Office Manager will confirm if the action was successful or not.
     - Default the system security settings using a DTE cable 135.

Defaulting the Security on a pre-8.0 IP Office Basic Edition System

In order to allow the security changes necessary for an existing system to support IP Office Web Manager after being upgraded to IP Office Release 8.0 or higher, the system must be reset to the default password before being upgraded. This can be done using IP Office Manager or phone based administration.

Using IP Office Manager

1. Start IP Office Manager 56 and receive the configuration from the IP Office system.
2. On the Manager home page, select **Change Remote / Administration Password.**
3. Enter ***password***, the pre-8.0 default, and click **OK**.

Using Phone Based Administration

Refer to the IP Office Basic Edition - Quick Mode Phone Based Administration manual. The system administration function #730 is used to set the security password. This function should be used to set the password back to ***password***.

8.2 Switching Off an IP Office System

IP Office systems running IP Office Release 6.0 can be shut down in order to perform maintenance. The shut down can be either indefinite or for a set period of time after which the IP Office will automatically reboot.

During the shut down process, the current configuration in the control unit's RAM memory is copied to the control units non-volatile memory. For IP500 V2 systems that location is the System SD card.

For control units with memory cards the memory cards can be shutdown and restarted 156 separately from the system.

- **! WARNINGS**
  - A shutdown must always be used to switch off the system. Simply removing the power cord or switching off the power input may cause the loss of configuration data.
  - This is not a polite shutdown, any user calls and services in operation will be stopped. Once shutdown, the system cannot be used to make or receive any calls until restarted.
  - The shutdown process takes up to a minute to complete. When shutting down a system with a Unified Communications Module installed, the shutdown can take up to 3 minutes while the card safely closes all open files and closes down its operating system. During this period the module's LED 1 remains green.
  - When shutdown, the LEDs shown on the system are as follows. Do not remove power from the system or remove any of the memory cards until the system is in this state:
    - LED1 on each IP500 base card installed will also flash red rapidly plus LED 9 if a trunk daughter card is fitted to the base card.
    - The CPU LED on the rear of the system will flash red rapidly.
    - The System SD and Optional SD memory card LEDs on the rear of the system are extinguished.
  - To restart a system when shutdown indefinitely, or to restart a system before the timed restart, switch power to the system off and on again.

System Shutdown Using IP Office Manager

1. Using IP Office Manager, select **File | Advanced | System Shutdown**.
2. Using the **Select IP Office** menu, the **System Shutdown Mode** menu is displayed.

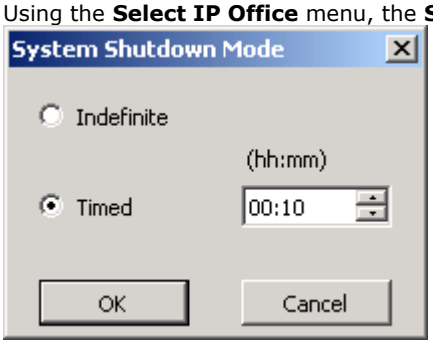

3. Select the type of shutdown required. If **Indefinite** is used, the system can only be restarted by having its power switched off and then on again. If a **Timed** shutdown is selected, the IP Office will reboot after the set time has elapsed.

System Shutdown Using the System Status Application

1. Start System Status 57 and access the IP Office's status output.
2. In the navigation panel select **System**.
3. At the bottom of the screen select **Shutdown System**.
4. Select the time duration for the shutdown or indefinite.

System Shutdown Using the IP500 V2 AUX Button

When the **AUX** button is pressed for more than 5 seconds, the IP500 V2 control unit will shutdown with the restart timer set to 10 minutes.

8.3 Rebooting an IP Office System

You can use IP Office Manager to reboot an IP Office system.

Rebooting a System

1. Using IP Office Manager, select **File | Advanced | Reboot**.
2. Use the **Select IP Office** menu to locate and select the IP Office system. Enter a valid user name and password.
3. The type of reboot can then be selected.

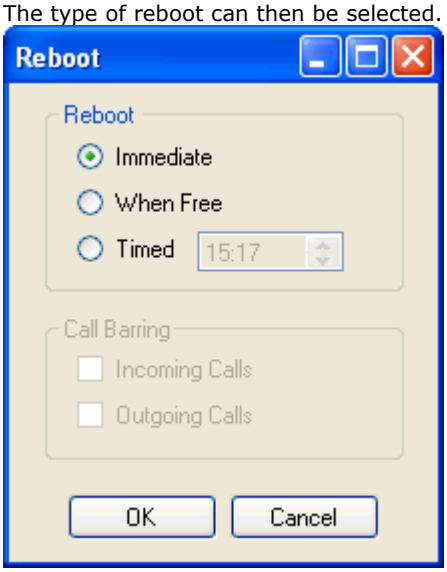

- **Reboot**
  Select when the reboot should occur.
  - **Immediate**
    Send the configuration and then reboot the IP Office.
  - **When Free**
    Send the configuration and reboot the IP Office when there are no calls in progress. This mode can be combined with the **Call Barring** options.
  - **Timed**
    The same as When Free but waits for a specific time after which it then wait for there to be no calls in progress. The time is specified by the **Reboot Time**. This mode can be combined with the **Call Barring** options.
- **Reboot Time**
  This setting is used when the reboot mode **Timed** is selected. It sets the time for the IP Office reboot. If the time is after midnight, the IP Office's normal daily backup is canceled.
- **Call Barring**
  These settings can be used when the reboot mode When Free is selected. They bar the sending or receiving of any new calls.

4. Click **OK**.

8.4 Memory Card Removal

Card Removal	Memory cards should always be shutdown 156 before being removed when the system is running. Though the card slot LEDs indicate when data is being written to an card, lack of flashing LED is not a sufficient safeguard. Shutting down the card will disable Embedded Voicemail if being used. If the **System SD** card is removed, features licensed by the card's Feature Key serial number will continue operating for up to 2 hours.

Before a memory card is removed from an IP Office system that is running, the card must be shutdown. Removing a memory card while the system is running may cause file corruption.

Card services can be restarted by either reinserting the card or using a **Start Up** command.

Card Shutdown Using IP Office Manager

1. Using IP Office Manager, select **File | Advanced | Memory Card Commands | Shutdown**.
2. Using the **Select IP Office** menu, select the IP Office system containing the memory card.
3. Click **OK**.
   - At the back of the control unit, confirm that the appropriate memory card LED is off.
   - The card can now be removed in order to perform the necessary maintenance actions.

Card Shutdown Using the System Status Application Application

1. Start System Status 57 and access the IP Office's status output.
2. In the navigation panel select **System**.
3. Select **Memory Cards**.
4. Select either **System Card** or **Optional Card**.
5. At the bottom of the screen select **Shutdown**.
   - At the back of the control unit, confirm that the appropriate memory card LED is off.
   - The card can now be removed in order to perform the necessary maintenance actions.

8.5 Memory Card Reinsertion

Reinserting a memory card into a system that is already switched on will automatically restart card operation. However, if the card has been shutdown but not removed, it can be restarted using Manager without requiring a reboot.

Card Startup Using IP Office Manager

1. Using IP Office Manager, select **File | Advanced | Memory Card Commands | Startup**.
2. Using the **Select IP Office** menu, select the IP Office system containing the memory card.
3. Click **OK**.

Card Startup Using the System Status Application

1. Start System Status 57 and access the IP Office's status output.
2. In the navigation panel select **System**.
3. Select **Memory Cards**.
4. Select either **System Card** or **Optional Card**.
5. At the bottom of the screen select **Start Up**.

8.6 Changing Components

Except for memory cards (see Memory Card Removal 118), cards and external expansions modules must only be removed and added to an IP Office system when that system is switched off 118.

In the sections below, the term component can refer to a card fitted into the IP Office or an external expansion module.

Note that for extension ports, by default both an extension entry and a user entry will exist in the IP Office configuration. Extension entries can be deleted without deleting the corresponding user entry. This allows retention of the user settings and association of the user with a different extension by changing that extensions **Base Extension** number to match the user's **Extension ID**.

Like for Like Replacement

If replacing with a componenet of the same type no configuration changes are necessary.

1. Switch off the IP Office system 118.
2. Remove the card or external expansion module. Note the card slot or expansion port used as the replacement must be installed in the same position.
3. Install the replacement using the appropriate process for the type of component (Fitting IP500 cards 64, Adding External Expansion Modules 72).
4. Restart the IP Office system.

Higher Capacity Replacement

If replacing with a component of the same type but higher capacity, when restarted the IP Office will automatically create configuration entries for the new trunks or extensions/users.

1. Switch off the IP Office system 118.
2. Remove the card or external expansion module. Note the card slot or expansion port used as the replacement must be installed in the same position.
3. Install the replacement using the appropriate process for the type of component (Fitting IP500 cards 64, Adding External Expansion Modules 72).
4. Restart the IP Office system.
5. Use Manager to configure the new trunks or extensions/users.

Lower Capacity Replacement

If replacing with a component of the same type but lower capacity, after restarting the IP Office the configuration will need to be edited to remove redundant entries.

1. Switch off the IP Office system 118.
2. Remove the card or external expansion module. Note the card slot or expansion port used as the replacement must be installed in the same position.
3. Install the replacement using the appropriate process for the type of component (Fitting IP500 cards 64, Adding External Expansion Modules 72).
4. Restart the IP Office system.
5. Use Manager to delete the trunks or extensions/users in the configuration that are no longer supported by the component installed.

Adding a New Component

If adding a new component to an available slot or port, when restarted the IP Office will automatically create configuration entries for the new trunks or extensions/users.

1. Switch off the IP Office system 116.
2. Install the replacement using the appropriate process for the type of component (Fitting IP500 cards 64, Adding External Expansion Modules 72).
3. Restart the IP Office system.
4. Use Manager to configure the new trunks or extensions/users.

Permanent Removal

If permanently removing the component, the configuration will need to be edited to remove redundant trunk or extension/user entries.

1. Switch off the IP Office system 116.
2. Remove the card or external expansion module.
3. Restart the IP Office system.
4. Use Manager to delete the trunks or extensions/users in the configuration that relate to the component removed.
5. In the **Control Unit** section of the configuration, delete the entry for the component that is no longer present in the system.

Replacement of a Different Type

If replacing a component with one of a different type, the process should be divided into two stages. First remove the existing component using the **Permanent Removal** process above and adjust the configuration and reboot. Then install the new component using the **Adding a New Component** process above.

8.7 Upgrading the IP Office Software

The installed IP Office Manager includes IP Office software files for control units, external expansion modules and phones appropriate to the IP Office software level.

- **New IP500 V2 Systems**
  The behavior of new IP500 V2 systems depends on the level of software installed when the first call is made as follow:
  - **Pre-IP Office Release 8.0(46) or IP Office Release 8.1(52)**
    For 90 days from its first call, a new IP500 V2 control unit can run any IP Office Release supported on a IP500 V2 system without requiring an upgrade license. The highest level run is written into the control unit's memory (not the SD card) and becomes a permanent entitlement for that control unit. After 90 days, the IP500 V2 may require an upgrade license if upgraded to a software release higher than any it has run during the initial 90 day period.
  - **IP Office Release 8.0(46), IP Office Release 8.1(52) and higher**
    Systems installed with firmware 8.0(46) or 8.1(52) have no entitlement period after their first call. For those systems, even if in their first 90 day period, any subsequent upgrade to a higher major or minor release will require a software upgrade licence to be added to the system.
- **! Warning**
  Systems upgraded without the appropriate license will display *"No license available"* and will not allow any telephony functions.

The IP Office system can be upgraded in two ways:

- **Using the IP Office Manager Upgrade Wizard** 123
  The upgrade wizard is part of IP Office Manager and can be used to upgrade all types of IP Office system.
- **Upgrading the System SD Card** 125
  For IP500 V2 control units, the software on the System SD card can be upgraded by a range of methods, i.e. directly upgrading the SD card or using the upgrade wizard. When the system is rebooted it will use the new software.

WARNINGS

- **Check IP Office Technical Bulletins**
  Check the latest IP Office Technical Bulletin for the IP Office software release before proceeding any further. It may contain information relating to changes that occurred after this document was completed. Bulletins are available from http://support.avaya.com.
  - **! Web Management**
    The addition of web management using IP Office Web Manager requires changes to the security settings of systems. For new systems those changes are made automatically. However, for system being upgraded, the changes can only be made if the system's security settings are defaulted. See Enabling IP Office Web Manager 115 for additional steps that should be performed before upgrading to IP Office Release 8.0 or higher.
- **Multiple Managers**
  If more than one copy of Manager is running it is possible for the IP Office to request BIN files from a different Manager from the one that started the upgrade process. Ensure that only one copy of Manager is running when upgrading an IP Office system.
- **Other IP Office Applications**
  Upgrading the core software of the IP Office control unit will require upgrades to associated software. The levels of application software supported with the IP Office core are detailed in the IP Office Technical bulletin for the release.

8.7.1 Using the Upgrade Wizard

1. Ensure that you have a backup copy of the IP Office's configuration before performing this action. If a copy of the configuration cannot be downloaded using Manager, check the Manager application directory for previously downloaded configurations.

   a. Use Manager to download an up to date copy of the configuration. If that is not possible, check in the Manager application folder for a previous copy of the configuration.

   b. Using IP Office Manager, select **File | Open Configuration**.

   c. Using the **Select IP Office Menu**, locate and select the IP Office system. Click **OK**.

   d. Enter the name and password for a service user account on that IP Office. Click **OK**. Manager will receive and display the configuration from the IP Office.

      - If not already done, this action creates a BOOTP entry in Manager for the IP Office system.
      - This action also confirms communication between the Manager PC and the IP Office prior to any following process.

   e. Select **File | Save Configuration As...** and save a copy of the configuration file onto the PC.

2. Select **File | Advanced | Upgrade**. The UpgradeWiz is started and scans for IP Office modules using the **Unit/Broadcast** address. Adjust this address and click **Refresh** if the expected control units are not shown.

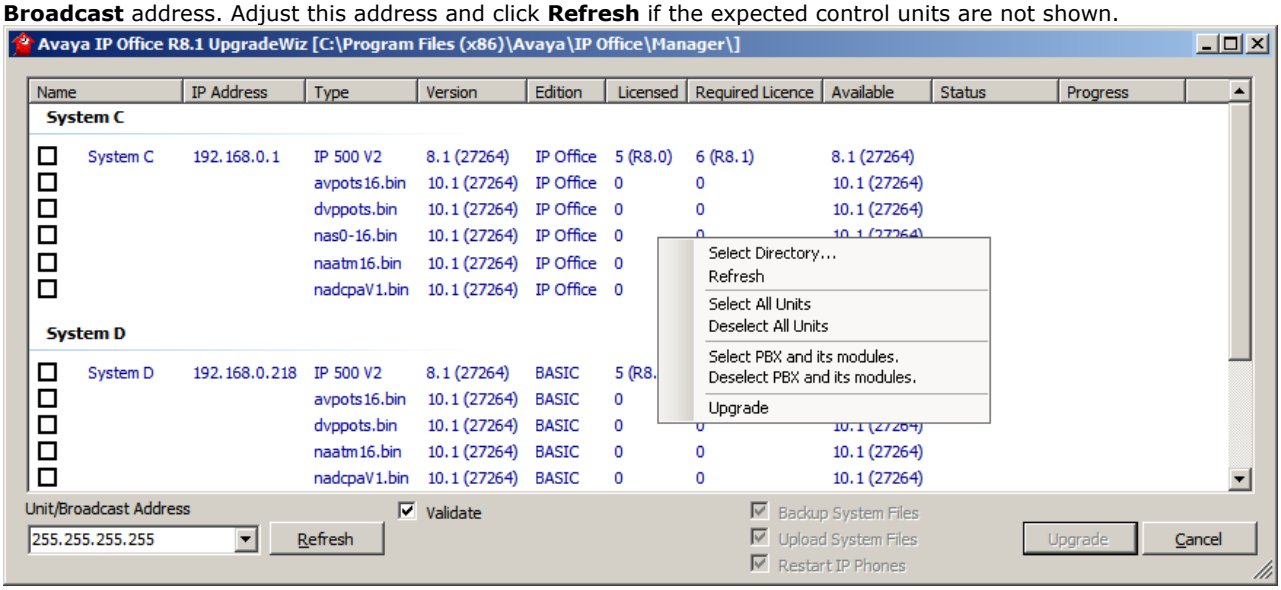

2. The information displayed depends on the type of control unit.

   - **For IP500 V2 control units**
     The current version of each IP Office .bin file held in the control units memory is shown. That is regardless of whether that .bin file is currently being used by any module in the system.
   - **For other control units**
     For the control unit and each external expansion module present in the system, the current version of software installed is displayed.

3. The **Version** column indicates the current version of software installed. The **Available** column indicates the version of software Manager has available. If the available version is higher, the check box next to that row is automatically selected.

   - If any of the modules have pre-version 2.1 software installed, an upgrade with **Validate** unticked is required. If this is the case, only continue with the upgrade process using a PC with a fixed IP address on the same LAN domain and physical LAN segment as the IP Office control unit and only upgrade the pre-2.1 system.
   - If a multi-stage upgrade is necessary, use the following additional steps to select the appropriate interim software:
     - Right-click on the upgrade wizard and click **Select Directory**. Locate and select the directory containing the bin file for the intermediate software level.
     - The upgrade wizard should now list just the control unit as having upgrade software available.
   - Upgrading to particular levels of IP Office software require a ***Software Upgrade X*** license where *X* is a number. The **Licensed** and **Required License** columns indicate the current highest upgrade license the system has and the required software upgrade license for the currently installed software.
     - It does not indicate the license requirement for the level of software in the **Available** column.
     - For IP500 V2 systems, a value of 255 indicates that the control unit is still in its initial upgrade entitlement period. See Upgrade Licenses 247.

- For Release 8.1, the maximum level of software supported by the **Licensed** and **Required License** values is also indicated in brackets.

4. For those modules which you want to upgrade, tick the check box.

5. For IP500 V2 control units, the following additional options are available:

   - **Backup System Files**
     If selected, before upgrading to the new software, the current files in the System SD cards **/primary** folder will be copied to its **/backup** folder.

   - **Upload System Files**
     If selected, the full set of software files that Manager has is copied to the **/primary** folder on the System SD card. In addition to control unit and module software this will include phone software files. Following the reboot, the phone will upgrade using those files if necessary.

   - **Restart IP Phones**
     If selected, following the upgrade and reboot, all Avaya IP phones are also restarted. This will cause them to recheck whether the firmware they currently have loaded matches that on their configured file server. Use this option if the IP Office system is the file server and the upgrade included new IP phone firmware.

6. Select **Upgrade**. The system password for each system will be requested. Enter it and click **OK**. The next steps depend on the upgrade options selected. Do not cancel or close the upgrade wizard while these processes are running.

   - **Validated Upgrade**
     If using the **Validated** option, a number of actions take place as follows;

     a. The upgrade wizard checks the amount of free RAM memory available in the control unit to temporarily store the new BIN files. If insufficient memory is available, you will be prompted whether to continue with an off-line upgrade or cancel upgrading.

        - If offline is selected, the IP Office is rebooted into offline mode. It may be necessary to use the **Refresh** option within the Upgrade Wizard to reconnect following the reboot. Validate upgrade can then be attempted to again check the amount of available RAM memory for transfer of BIN files. If the memory is still insufficient, the option is offered to either do an unvalidated upgrade or cancel.

     b. The bin files required are transferred to the system and stored in temporary memory.

     c. For IP500 V2 control units, the backup system files and upload system files actions are performed.

     d. Once all file transfers are completed, the upgrade wizard will prompt whether it okay to proceed with the upgrade process. Select **Yes** to continue.

        - With non-IP500 V2 systems, expansion modules are upgraded first before the control unit.

        - With IP500 V2 system, the control unit reboots and upgrades itself first. It then proceeds with upgrading the external expansion modules.

   - **Unvalidated Upgrade**
     This method of upgrading should be avoided unless absolutely necessary. It is only required for IP Office systems with pre-2.1 software and should only be done from a Manager PC with a fixed IP address running on the same LAN segment and subnet as the IP Office system. During the upgrade the units and modules erases their current software and then request the new software file from Manager.

7. Following the upgrade check that the upgrade wizard now shows that the selected units and modules have upgraded. It may be necessary to select **Refresh** to update the information in the upgrade wizard display.

8. Repeat the process as required.

8.7.2 Using an SD Card

In addition to using the traditional IP Office Upgrade Wizard 123, IP500 V2 control units can be upgraded by loading the required set of firmware files onto the System SD card and rebooting the system.

- **! IP Office Technical Bulletins**
  Ensure that you have obtained and read the IP Office Technical Bulletin relating to the IP Office software release which you are installing. This bulletin will contain important information that may not have been included in this manual. IP Office Technical Bulletins are available from the Avaya support website (*http://support.avaya.com*).

- **! Upgrade Licenses**
  Some upgrades may require entry of upgrade licenses. It is still possible to upgrade the system without the necessary licenses, however the system will not provide any telephony functions after the upgrade until the appropriate license is added to the system configuration.

- **! WARNING**
  This process will require the IP Office system to reboot in order to complete the process. Any current calls and services will be ended by the reboot.

There are a number of ways in which this can be done.

Method	Description	Location	Software Files	Embedded Voicemail Prompts
Using Manager 154	Using IP Office Manager, the contents of the card are compared to the files that Manager has available and are upgraded if necessary.	**Local or Remote**	✓	✓
System SD Card Upgrade 154	In this method, the System SD card is shut down and removed from the control unit. The card's contents are upgraded using IP Office Manager.	**Local**	✓	✓
Upgrade from Optional SD Card 155	This method uses an SD card loaded with the required version of IP Office software. The card is inserted into the control unit's Option SD card slot and its contents copied to the System SD card.	**Local**	✓	–

8.8 Out of Building Telephone Installations

The following are the only supported scenarios in which wired extensions and devices outside the main building can be connected to the IP Office system. In these scenarios, additional protection, in the form of protective grounding and surge protectors, must be fitted.

- **WARNING**
  The fitting of additional protection does not remove the risk of damage. It merely reduces the chances of damage.

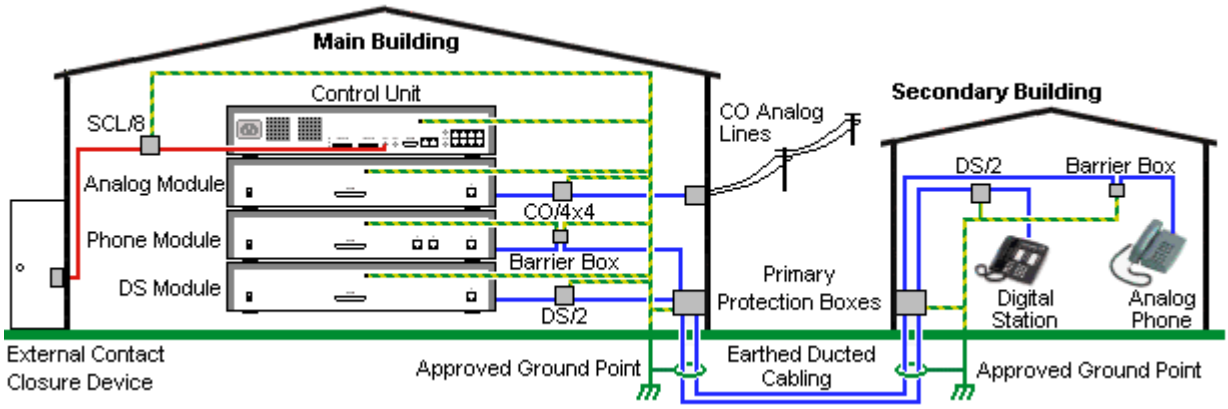

- Cables of different types, for example trunk lines, phone extensions, ground and power connections, should be kept separate.
- All cabling between buildings should be enclosed in grounded ducting. Ideally this ducting should be buried.
- A Primary Protection Box must be provided at the point where the cables enter the building. This should be three point protection (tip, ring and ground). Typically this would be gas tube protection provided by the local telephone company. The ground wire must be thick enough to handle all the lines being affected by indirect strike at the same time.

Connection Type	Protection Device Type	Requirement
Analog Phone Extensions Phones External expansion module (POT 24 or PHONE 24) ports only.	**IP Office Barrier Box** 128 Supports a single connection. Maximum of 16 on any expansion module.	• Connection from the expansion module to the phone must be via a surge protector at each end and via the primary protection point in each building. • The IP Office external expansion modules, control unit and IROB devices must be connected to the protective ground point in their building. • The between building connection must be via earthed ducting, preferable underground. The cable must not be exposed externally at any point.
DS Phone Extensions	**ITWLinx towerMAX DS/2** 127 Supports up to 4 connections. This device was previously referred to as the Avaya 146E.	
TCM Phone Extensions	None	Currently not supported.
Analog Trunks	**ITWLinx towerMAX CO/4x4** 127 Supports up to 4 two-wire lines. This device was previously referred to as the Avaya 146C.	For installations in the Republic of South Africa, the fitting of surge protection on analog trunks is a requirement. For other locations where the risk of lightning strikes is felt to be high, additional protection of incoming analog trunks is recommended.
External Output Switch	**ITWLinx towerMAX SCL/8** This device was previously referred to as the Avaya 146G.	Connections from an IP Office Ext O/P port to an external relay device must be via a surge protector.

The towerMAX range of devices are supplied by ITWLinx (http://www.itwlinx.com).

8.8.1 DS Phones

When digital phone extensions are required in another building, additional In-Range Out-Of-Building (IROB) protective equipment must be used. For phones connected to IP Office DS 235 ports, the supported device supplied by ITWLinx is a towerMAX DS/2 module. This IROB device was previous badged by Avaya as the 146E IROB.

- **! WARNING**
  This device is not supported for TCM port connections, ie. 4100 Series, T-Series, 7400 Series and M-Series phones.

The protection device should be installed as per the instructions supplied with the device. The ground points on the IP Office control unit and any external expansion modules must be connected to a protective ground using 18AWG wire with a green and yellow sleeve.

Typically the IROBs 2 RJ45 EQUIPMENT ports are straight through connected to the 2 RJ45 LINE ports. This allows existing RJ45 structured cabling, using pins 4 and 5, to be used without rewiring for up to two DS connection. However, each of these ports can be used to connect a second extension using pins 3 and 6.

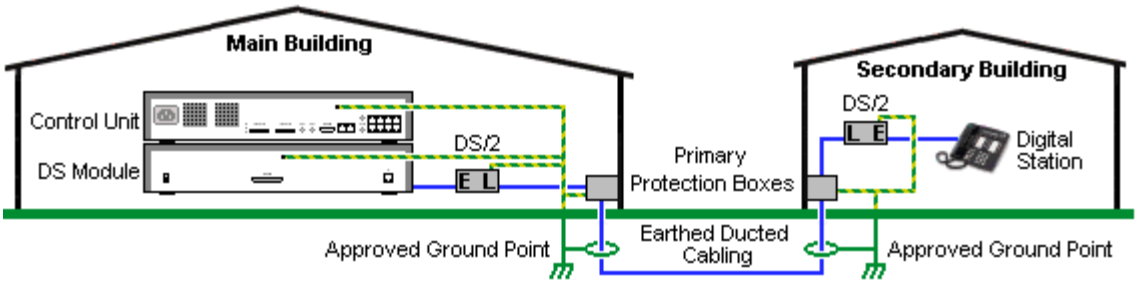

LINE		Signal		EQUIPMENT	
RJ45 8 1	1	Not used.	Ground; LINE; EQUIPMENT	1	RJ45 8 1
	2	Not used.		2	
	3	Ring II (Optional)		3	
	4	Ring I		4	
	5	Tip I		5	
	6	Tip II (Optional)		6	
	7	Not used.		7	
	8	Not used.		8	

8.8.2 Analog Phone Barrier Box

Where analog phone extensions are required in another building, additional protective equipment must be used, in the form of IP Office Phone Barrier Boxes and protective earth connections.

- ⚠ **CAUTION**
  PHONE (POT) ports on the front of control units must not be used for extensions that are external to the main building.
- The correct IP Office specific barrier boxes must be used. These modules have been designed specifically for the signalling voltages used by the IP Office system:
  - Only the IP Office Phone Barrier Box should be used with Phone V1 modules.
  - Only the IP Office Phone Barrier Box V2 should be used with Phone V2 modules.
  - No other type of analog phone barrier box should be used.
- Where more than 3 barrier boxes are required in a building, they must be rack mounted using a Barrier Box rack mounting kit 129.
- A maximum of 16 barrier boxes can be used with any Phone module.
- The Phone Barrier Box does not connect the ringing capacitor in Phone V1 modules.

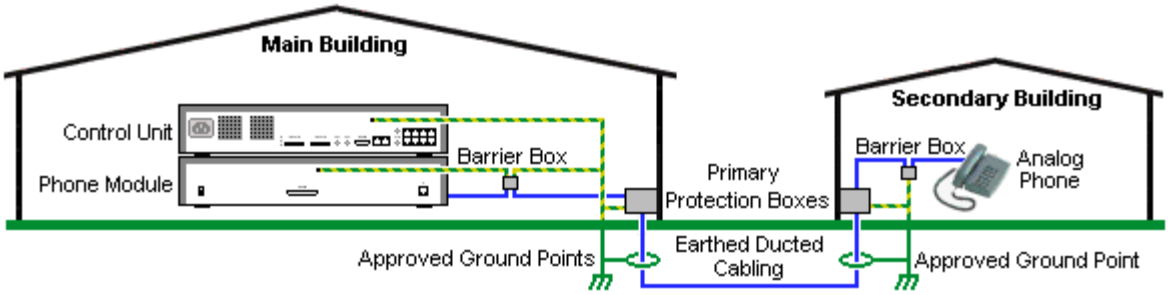

Main Building	Barrier Box	Secondary Building
• **RJ11** Connect to PHONE (POT) port on the Phone module using cable supplied with the barrier box. • **RJ45** Connect to the secondary building barrier box via primary protection in both buildings.	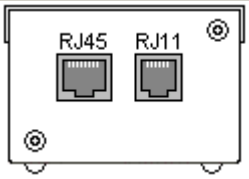	• **RJ11** Connect to analog phone. Cable not supplied. • **RJ45** From main building via primary protection in both buildings.
• **Center Screw** Connect to main building protective ground (or ground terminal of Barrier Box Rack Mounting Kit). Use 18AWG (minimum) wire with a green and yellow sleeve. • **Right-Hand Screw** Connect to ground point on Phone module using ground cable supplied with barrier box.	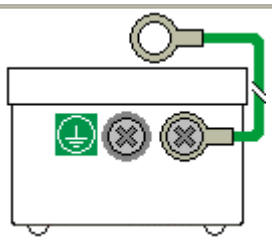	• **Center Screw** Connect to main building protective ground. Use 18AWG (minimum) wire with a green and yellow sleeve. • **Right-Hand Screw** Not used.

1. The following wires must be kept apart, that is not routed in the same bundle:
   - Earth leads from the barrier box to the Phone modules.
   - Internal wires, for example extension leads going directly to the Phone modules.
   - Wires from external telephone going directly to the barrier boxes.

IP Office Barrier Boxes		SAP Code
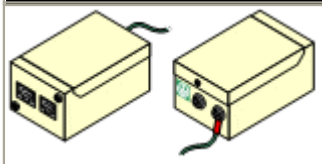	**IP400 Phone Barrier Box (81V)** Use with Phone V1 module. Includes an RJ45 to RJ11 cable and a functional earth lead.	700293897
	IP400 Phone Barrier Box V2 (101V) Use with Phone V2 module. Includes an RJ45 to RJ11 cable and a functional earth lead.	700385495
	Barrier Box Rack Mounting Kit	700293905

8.8.3 Rack Mounting Barrier Boxes

Where more than 3 Phone Barrier Boxes are used they must be rack mounted. The Barrier Box Rack Mounting Kit (SAP Code 700293905) supports up to 8 Phone Barrier Boxes.

1. Unscrew the two screws arranged diagonally at the front of each barrier box and use these same screws to reattach the barrier box to the rack mounting strip.
2. Each barrier box is supplied with a solid green ground wire connected to its functional ground screw. Remove and discard this wire. Connect a green/yellow ground wire to the protective earth screw in the center of the Point on the back of the Barrier Box.

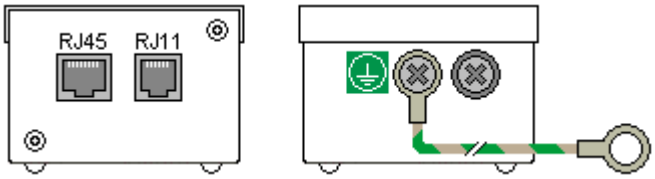

3. The rack mounting strip has threaded M4 earthing pillars. Connect the other end of the barrier box ground wire, using M4 washers and nuts, to the earthing pillar on that side of the rack mounting strip.

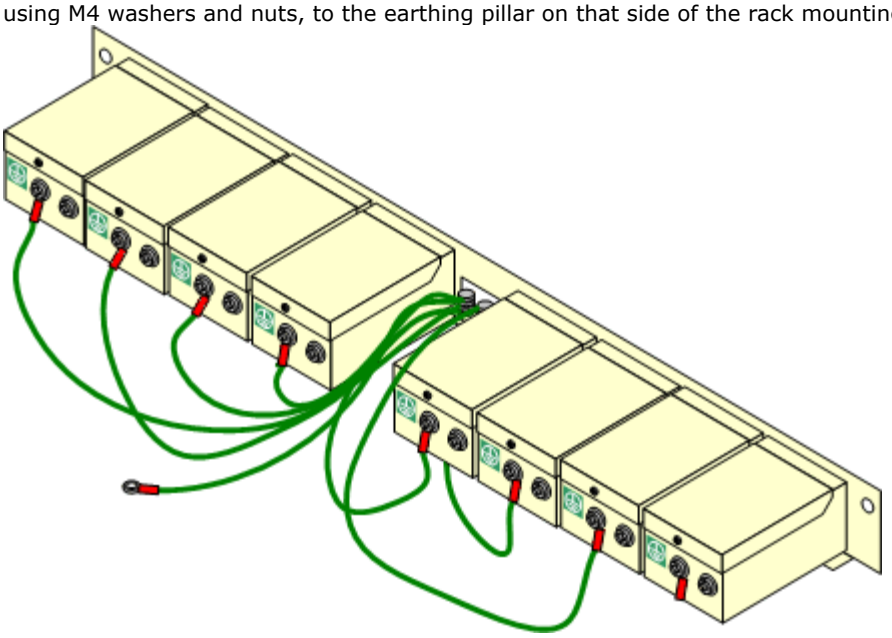

4. Using 14AWG wire with green and yellow sleeve, connect one of the earthing pillars to the buildings protective earth.
5. Using 14AWG wire with green and yellow sleeve, connect the other earthing pillar to the Phone module.
6. Ensure that the following wires are not routed together in the same bundle:
   - Earth lead from the barrier box to the Phone module.
   - Internal wires, e.g. wires going directly to the Phone module.
   - Wires from external telephone going directly to the barrier boxes.

8.9 Using the External Output Port

All the IP Office control units are equipped with a EXT O/P port. The port is marked as EXT O/P and is located on the back of the control unit adjacent to the power supply input socket.

The port can be used to control up to two external devices such as door entry relay switches. The usual application for these switches is to activate relays on door entry systems. However, as long as the criteria for maximum current, voltage and if necessary protection are met, the switches can be used for other applications.

The switches can be switched closed, open or pulsed (closed for 5 seconds and then open). This can be done in a number of ways:

- Using IP Office short codes.
- Through the **Door Release** option in IP Office SoftConsole.
- Via the **Open Door** action in Voicemail Pro.

Default Short Codes
The following are the default short codes in the IP Office configuration for external output switch operation. They use the short code features Relay On (closed), Relay Off (open) and Relay Pulse.

State	Switch 1	Switch 2
Closed	*39	*42
Open	*40	*43
Pulse	*41	*44

8.9.1 Port Connection

These ports are found on the rear of all IP Office control units. They are used for connection to external switching relays. The port uses a standard 3.5mm stereo jack plug for connection.

The IP Office is able to open (high resistance), close (low resistance) or pulse (close for 5 seconds and then open) two switches within the port. Either switch can be operated separately. These switches are intended for activation of external relays in systems such as door opening systems.

- **CAUTION:** In installations where this port is connected to a device external to the building, connection must be via a towerMAX SCL/8 Surge Protector and a protective ground connection must be provided on the IP Office control unit.

EXT O/P	Pin	Description
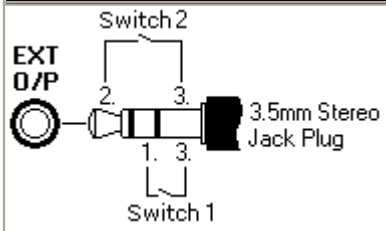	1	Switch 1.
	2	Switch 2.
	3	0 Volts (Ground/Chassis)

- Switching Capacity: 0.7A.
- Maximum Voltage: 55V d.c.
- On state resistance: 0.7 ohms.
- Short circuit current: 1A.
- Reverse circuit current capacity: 1.4A.
- Ensure that pins 1 and 2 are always at a positive voltage with respect to pin 3.

3.5mm stereo audio jack plugs are frequently sold as pre-wired sealed modules. It may be necessary to use a multi-meter to determine the wiring connections from an available plug. Typically 3 (common to both relays) is the cable screen.

8.10 Reset Button

The IP500 and IP500 V2 control units have a **Reset** button. Pressing the button while the control unit is starting up will pause the start up until the button is released. The effect of pressing the button during normal operation will depend on how long the button is pressed and is indicated by the CPU LED.

Press Duration (seconds)	CPU LED	Action	Summary
0 to 5.	**Off**	**None**	None.
5 to 10.	**Orange**	**Reboot When Free**	Reboot when free with new incoming/outgoing call barring. A reboot using the reset button is recorded in the Audit Trail.
10 to 30.	**Flashing orange**	**Erase Configuration/ Immediate Reboot**	Erase the configuration, alarm log and audit trail. Immediate reboot without waiting for active calls to end. See Erasing the configuration 133 for full details.
30 to 40.	**Red**	**Erase All.**	Erase configuration, alarm log and core software. See Erasing the Operational Software 136 for full details.
Over 40.	**Flashing green**	**None**	None.

8.11 AUX Button

IP500 V2 control units have an AUX button. This button can be used as follows.

If pressed during a restart of the control unit, the control unit skip booting 143 from the ***/primary*** folder on the System SD card. If pressed for more than 5 seconds when a system is running, the control unit will shutdown 116 for 10 minutes.

8.12 DTE Port Maintenance

The DTE port on the back of IP Office control units is not normally used when configuring an IP Office system. However, in extreme cases, the DTE port can be used to default the system's configuration or to erase it core software if necessary.

- ⚠ **WARNING**
  Due to the nature of the actions in this section, they should only be performed if absolutely necessary to return a system back to working order. In all cases, you must make every effort to ensure that you have a backup copy of the system configuration.
- The DTE ports on IP Office expansion modules are not used for any maintenance or diagnostics.

8.12.1 DTE Port Settings

These ports are found on the rear of all IP Office control units and external expansion modules. The DTE ports on external expansion modules are not used.

The RS232 DTE ports on the control units can be used for system maintenance and connection of serial terminal adaptors. On IP400 control units the port can also be used for connection of the IP Office serial port licence key dongle.

An asynchronous terminal program such as HyperTerminal is also required. Configure this for operation via a PC serial port, as follows:

Bits per second	38,400	**Parity**	None	**Flow Control**	None
Data bits	8	**Stop Bits**	1	**Settings | Emulation**	TTY

DTE Cables

These cables are used for system maintenance and diagnostics under Avaya guidance. They can also be used for connection of RS232 serial terminal adaptor equipment to the IP Office control unit. The cable required depends on the IP Office control unit. This cable is a "Straight through DB9 female to DB9 male serial cable".

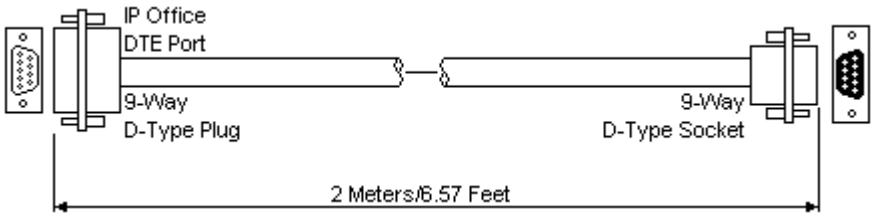

IP Office 9-Way RS232 DTE Port	Signal	PC/Terminal Adaptor
3	⬅Receive data	3
2	➡Transmit Data	2
7	⬅RTS (Request To Send)	7
8	➡CTS (Clear To Send)	8
6	➡DSR (Data Set Ready)	6
5	●Ground	5
1	➡DCD (Data Carrier Detect)	1
4	⬅DTR (Data Terminal Ready)	4
9	➡RI (Ring Indicator)	9

8.12.2 Erasing the Configuration

The following processes erases the configuration held in the IP Office control unit's memory. That include both the current configuration being used in RAM memory and the backup configuration stored in non-volatile memory. Following this the IP Office will restart with a default configuration.

This process should be performed from a PC with a fixed IP address, directly connected to the IP Office control unit and with the IP Office system disconnected from any network. Following this process, the control unit's IP address will default to 192.168.42.1.

- ⚠ Do not perform any of these processes unless absolutely necessary. The IP Office's configuration settings can be default through Manager using the **File | Advanced | Erase Configuration** command.
- For IP Office Release 7.0 and higher, IP500 V2 systems using **IP Office A-Law** or **IP Office Mu-Law** System SD cards will default to IP Office Basic Edition - Quick Mode. Loading the configuration will switch IP Office Manager to simplified view. To change the system back to operating in IP Office Essential Edition, select the **File | Advanced | Change Mode**.

Erasing the Configuration via Debug

This process erases the IP Office's configuration settings but does not alter its security settings. It is easier to use than the boot loader method.

1. Ensure that you have a backup copy of the IP Office's configuration before performing this action. If a copy of the configuration cannot be downloaded using Manager, check the Manager application directory for previously downloaded configurations.
   a. Use Manager to download an up to date copy of the configuration. If that is not possible, check in the Manager application folder for a previous copy of the configuration.
   b. Using IP Office Manager, select **File | Open Configuration**.
   c. Using the **Select IP Office Menu**, locate and select the IP Office system. Click **OK**.
   d. Enter the name and password for a service user account on that IP Office. Click **OK**. Manager will receive and display the configuration from the IP Office.
      - If not already done, this action creates a BOOTP entry in Manager for the IP Office system.
      - This action also confirms communication between the Manager PC and the IP Office prior to any following process.
   e. Select **File | Save Configuration As...** and save a copy of the configuration file onto the PC.
2. Attach the serial cable between the PC and the DTE port on the IP Office control unit.
   a. Start the terminal program on your PC. Ensure that it has been setup as listed in DTE Port Settings 132. Within a HyperTerminal session, the current settings are summarized across the base of the screen.
   b. Enter **AT** (note upper case). The control unit should respond ***OK***.
   c. Enter **AT-DEBUG**. The control unit should response with the time and date and then ***Hello>*** to show it is ready to accept commands.
3. To erase the current configuration in RAM memory enter **eraseconfig**. The ***Hello>*** command prompt reappears when the action is completed.
4. To erase the backup configuration stored in non-volatile Flash memory enter **erasenvconfig**. The ***Hello>*** command prompt reappears when the action is completed.
5. To reboot the IP Office enter **reboot**. The IP Office will reboot and restart with a defaulted configuration.
6. Close the terminal program session.
7. Manager can now be used to alter and then upload an old configuration file or receive and edit the control unit's now defaulted configuration.

Erasing the Configuration and Security Settings via the Boot Loader

This process defaults the IP Office security settings and its configurations settings.

2. Ensure that you have a backup copy of the IP Office's configuration before performing this action. If a copy of the configuration cannot be downloaded using Manager, check the Manager application directory for previously downloaded configurations.

   f. Use Manager to download an up to date copy of the configuration. If that is not possible, check in the Manager application folder for a previous copy of the configuration.

   g. Using IP Office Manager, select **File | Open Configuration**.

   h. Using the **Select IP Office Menu**, locate and select the IP Office system. Click **OK**.

   i. Enter the name and password for a service user account on that IP Office. Click **OK**. Manager will receive and display the configuration from the IP Office.

      - If not already done, this action creates a BOOTP entry in Manager for the IP Office system.
      - This action also confirms communication between the Manager PC and the IP Office prior to any following process.

   j. Select **File | Save Configuration As...** and save a copy of the configuration file onto the PC.

2. Attach the serial cable between the PC and the DTE port on the IP Office control unit.

   a. Start the terminal program on your PC. Ensure that it has been setup as listed in DTE Port Settings 132. Within a HyperTerminal session, the current settings are summarized across the base of the screen.

   b. Arrange the program windows so that the Terminal program and Manager TFTP Log are visible at the same time.

   c. Switch off power to the IP Office control unit.

   d. Power on the control unit and press the escape key every second until you get a Loader message. Below is an example.

```
P12 Loader 2.4
CPU Revision 0x0900
```

   e. Enter **AT** (note upper case). The control unit should respond ***OK***.

   f. If an OK response is not received, check the settings of your terminal program and repeat the process above.

3. Proceed with the erasure process.

   - To erase the alarm log enter ***AT-X1***.
   - To erase the current configuration, enter ***AT-X2***. A typical response if ***Sector 2 Erase (NV Config)*** followed by ***OK***. Enter ***AT-X3***. A typical response is ***Sector Erases (Config)*** followed by a series of ***OK*** responses.

4. Switch power to the control unit off and then back on. Within the terminal program you should see various messages as the control unit performs various start up tasks.

5. Close the terminal program session.

6. Manager can now be used to alter and then upload an old configuration file or receive and edit the control unit's now defaulted configuration.

8.12.3 Defaulting Security Settings

Procedure: Defaulting Security Settings

This process defaults the IP Office's security settings but does not alter its configuration settings.

1. Attach the serial cable between the PC and the DTE port on the IP Office control unit.
2. Start the terminal program on your PC. Ensure that it has been setup as listed in DTE Port Settings 132. Within a HyperTerminal session, the current settings are summarized across the base of the screen.
3. Enter **AT** (note upper case). The control unit should respond ***OK***.
4. Enter **AT-SECURITYRESETALL**.
5. You will be prompted to confirm the control unit's MAC address before continuing. Enter the address.
6. The control unit will respond ***OK*** when the action has been completed.
7. Close the terminal program session.
8. Manager can now be used to receive and edit the control unit's now defaulted security settings.

Defaulting the Configuration and Security Settings via the Boot Loader

This process defaults the IP Office security settings and its configurations settings.

1. Ensure that you have a backup copy of the IP Office's configuration before performing this action. If a copy of the configuration cannot be downloaded using Manager, check the Manager application directory for previously downloaded configurations.
   a. Use Manager to download an up to date copy of the configuration. If that is not possible, check in the Manager application folder for a previous copy of the configuration.
   b. Using IP Office Manager, select **File | Open Configuration**.
   c. Using the **Select IP Office Menu**, locate and select the IP Office system. Click **OK**.
   d. Enter the name and password for a service user account on that IP Office. Click **OK**. Manager will receive and display the configuration from the IP Office.
      - If not already done, this action creates a BOOTP entry in Manager for the IP Office system.
      - This action also confirms communication between the Manager PC and the IP Office prior to any following process.
   e. Select **File | Save Configuration As...** and save a copy of the configuration file onto the PC.
2. Attach the serial cable between the PC and the DTE port on the IP Office control unit.
   a. Start the terminal program on your PC. Ensure that it has been setup as listed in DTE Port Settings 132. Within a HyperTerminal session, the current settings are summarized across the base of the screen.
   b. Arrange the program windows so that the Terminal program and Manager TFTP Log are visible at the same time.
   c. Switch off power to the IP Office control unit.
   d. Power on the control unit and press the escape key every second until you get a Loader message. Below is an example.

      ```
      P12 Loader 2.4
      CPU Revision 0x0900
      ```

   e. Enter **AT** (note upper case). The control unit should respond ***OK***.
   f. If an OK response is not received, check the settings of your terminal program and repeat the process above.
3. To erase the current configuration in RAM memory enter **AT-X3**. A typical response is ***Sector Erases (Config)*** followed by a series of ***OK*** responses.
4. To erase the backup configuration stored in non-volatile memory enter **AT-X2**. A typical response if ***Sector 2 Erase (NV Config)*** followed by ***OK***. IP Office 403 only: If running an IP Office 403 control unit, also enter **AT-X4**.
5. Switch power to the control unit off and then back on. Within the terminal program you should see various messages as the control unit performs various start up tasks.
6. Close the terminal program session.
7. Manager can now be used to alter and then upload an old configuration file or receive and edit the control unit's now defaulted configuration.

8.12.4 Erasing the Operational Firmware

When the firmware loaded by the control unit is erased, the control unit will begin making BOOTP requests for a replacement firmware file. Manager can act as a BOOTP server and respond to the control units request with the appropriate file from those installed with Manager.

Unlike other control units, when the firmware loaded by an IP500 V2 control unit is erased, the IP500 V2 control unit will first look for replacement firmware on its SD cards before falling back to using a BOOTP request to Manager.

The processes below should be performed from a PC with a fixed IP address, directly connected to the IP Office control unit and with the IP Office system disconnected from any network. During the process, the control unit's IP address may default to a value in the 192.168.42.1 to 192.168.42.10 range. If this occurs, it may be necessary to amend the BOOTP entry in IP Office Manager to match the address the system is using.

- ⚠ Do not perform any of the following processes unless absolutely necessary. The IP Office software can normally be upgraded using IP Office Manager 122.
- ⚠ This process erases the operational software. Before attempting this process you must know the MAC and IP addresses of the system, plus have a backup copy of its configuration and the correct .bin file for the control unit type and level of software.
- ⚠ The presence of any firewall blocking TFTP and or BOOTP will cause this process to fail.

Erasing the Core Software via Debug

1. Run Manager.
   - In the **BOOTP** entries, check that there is an entry that matches the MAC Address, IP Address and .bin file used by the system. An entry is normally automatically created when a configuration has been loaded from that IP Office. .
     - If an entry is not present, create a new entry manually. The first two details can be found in the Control Unit settings in the configuration file. Then close and restart Manager.
   - Under **File | Preferences** ensure that Manager is set to 255.255.255.255. Also check that **Enable BootP Server** is checked.
   - Select **View | TFTPLog**.
   - Check that the required .bin file is present in Manager's working directory.
2. Attach the serial cable between the PC and the DTE port on the IP Office control unit.
   a. Start the terminal program on your PC. Ensure that it has been setup as listed in DTE Port Settings 132. Within a HyperTerminal session, the current settings are summarized across the base of the screen.
   b. Enter **AT** (note upper case). The control unit should respond ***OK***.
   c. Enter **AT-DEBUG**. The control unit should response with the time and date and then ***Hello>*** to show it is ready to accept commands.
3. To erase the current configuration in RAM memory enter **upgrade**.
4. The IP Office will erase its current software and then send out a BootP request on the network for new software. Manager will respond and start transferring the software using TFTP.

Erasing the Core Software via the Boot Loader

2. Run Manager.
   - In the **BOOTP** entries, check that there is an entry that matches the MAC Address, IP Address and .bin file used by the system. An entry is normally automatically created when a configuration has been loaded from that IP Office. .
     - If an entry is not present, create a new entry manually. The first two details can be found in the Control Unit settings in the configuration file. Then close and restart Manager.
   - Under **File | Preferences** ensure that Manager is set to 255.255.255.255. Also check that **Enable BootP Server** is checked.
   - Select **View | TFTPLog**.
   - Check that the required .bin file is present in Manager's working directory.
2. Attach the serial cable between the PC and the DTE port on the IP Office control unit.
   a. Start the terminal program on your PC. Ensure that it has been setup as listed in DTE Port Settings 132. Within a HyperTerminal session, the current settings are summarized across the base of the screen.
   b. Arrange the program windows so that the Terminal program and Manager TFTP Log are visible at the same time.
   c. Switch off power to the IP Office control unit.
   d. Power on the control unit and press the escape key every second until you get a Loader message. Below is an example.

```
P12 Loader 2.4
CPU Revision 0x0900
```

   e. Enter **AT** (note upper case). The control unit should respond ***OK***.
   f. If an OK response is not received, check the settings of your terminal program and repeat the process above.
3. Enter **AT-X**. The control unit should respond **Multi-Sector Erase**.
4. The control unit will now request the .bin file it requires. For IP500 V2 control units this will be from files on the System SD card. For other control units it will be from Manager and appears in the TFTP Log.
5. If the file transfers does not appear to be taking place, check that the IP address shown in the TFTP Log matches the BOOTP entry. Adjust the BOOTP entry if necessary.
6. When completed the system will reboot.

Chapter 9.
SD Card Management

9. SD Card Management

The IP500 V2 control unit has two SD card slots, labeled **System SD** and **Optional SD** respectively. These are used as follows:

- **System SD Card**
  An Avaya System SD card must be present in this slot at all times. This card holds copies of the IP Office firmware and configuration and is used as the IP500 V2 control units non-volatile memory.
  - Each Avaya System SD card has a unique Feature Key serial number which is used for generating and validating licenses entered into the IP Office configuration.
  - The card stores the prompts for Embedded Voicemail operation and acts as the message store for Embedded Voicemail messages.
  - Prior to any planned shutdown or restart of the IP Office system, the current configuration running in the IP Office system's RAM memory is copied to the **/primary** folder on the System SD card and to the systems non-volatile memory.
  - Following a restart, the software in the **/primary** folder is loaded by the IP500 V2 control unit. If the required software is not present or valid a sequence of fallback options is used, see Booting from the SD Cards 143 for full details.
  - Following a restart, if present, the configuration file in the **/primary** folder is loaded by the IP500 V2 control unit. If no file is present the system will check for a file in its internal non-volatile memory. If no copy is found it will generate a default configuration file. See Booting from the SD Cards 143 for full details.
  - Once each day (approximately between 00:00 and 00:30) the IP Office will copy the current configuration running in its RAM memory to the **/primary** folder on the card.
  - Configuration changes made using IP Office Manager are first written to the copy of the configuration file on the card and then merged with the configuration running in the IP Office system's RAM memory.
  - The write lock setting on cards in the System SD card slot is ignored.
- **Optional SD Card**
  A card does not have to be present in this slot for normal IP Office operation. The slot can be used for various maintenance actions.
  - A card with an updated IP Office software or configuration can be inserted and those files then transferred to the System SD card in order to upgrade the IP Office system.
  - The full contents of the System SD card can be copied to the Optional SD card while the IP Office system is running.
  - The write lock setting on cards in the Optional SD card slot is honored.

Card Removal	Memory cards should always be shutdown 156 before being removed when the system is running. Though the card slot LEDs indicate when data is being written to an card, lack of flashing LED is not a sufficient safeguard. Shutting down the card will disable Embedded Voicemail if being used. If the **System SD** card is removed, features licensed by the card's Feature Key serial number will continue operating for up to 2 hours.

Card Maintenance Actions

Using IP Office Manager, IP Office System Status Application or Phone Based Administration 51, a number of actions can be performed on the SD cards.

Action	Description	Manager	System Status	System Phone	Minutes
Shutdown/ Restart 156	Memory cards should always be shutdown 156 before being removed when the system is running. Though the card slot LEDs indicate when data is being written to an card, lack of flashing LED is not a sufficient safeguard. Shutting down the card will disable Embedded Voicemail if being used. If the **System SD** card is removed, features licensed by the card's Feature Key serial number will continue operating for up to 2 hours.	✓	✓	✓	–
Backup 148	Copy the files in the **/primary** folder on the System SD card to the **/backup** folder on the card.	✓	✓	✓	6
Restore 149	Copy the files in the **/backup** folder on the System SD card to the **/primary** folder on the card and restart the IP Office system.	✓	✓	✓	6
Copy 150	Copy all the files on the System SD card to the Optional SD card.	✓	✓	✓	90
Upgrade Binaries 153	Copy software files in the **/primary** folder on the Optional SD card to the **/primary** folder on the System SD card and then restart the IP Office system.	✓	–	✓	5
Upgrade Configuration 153	Copy the configuration file in the **/primary** folder on the Optional SD card to the **/primary** folder on the System SD card and then restart the IP Office system.	✓	–	–	5 seconds
Upload System Files 153	Upload a set of IP Office software and Embedded Voicemail prompts to the System SD card.	✓	–	–	40
View Files 147	View the folders and files on the control unit memory cards.	✓	–	–	–
	The actions below can be performed on cards in a SD card reader on a PC running IP Office Manager.				
Format 145	Reformat a card for IP Office usage without removing the Feature Key serial number. • ⚠ This process will erase all existing files on the card.	✓	✓	–	1
Recreate 145	Create the folder structure on a memory card and copy a set of IP Office software files into those folders.	✓	–	–	15

- Process marked as **System Phone** can be performed through phone based administration 51 from either of the first two extensions in the system. For details, refer to the IP Office Basic Edition - Quick Mode Phone Based Administration manual.

Card Specification

Non-Avaya cards can be used in the **Optional SD** slot as long as they match or exceed the standard below:

- SDHC 4GB minimum Class 2+. Single partition FAT32 format.

SD Card Folders

The **System SD** card contains the following folders:

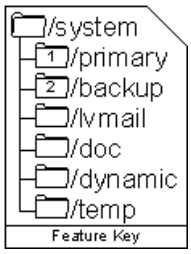

- **/primary**
  Contains the firmware files for the IP Office control unit, external expansion modules and supported phones. The folder can also contain music on hold files and license key files. This is the main set of files used by the IP Office system when booting up. Also contains the stored copy of the IP Office configuration.
- **/backup**
  Contains a copy of the primary folder at some previous point. A backup copy of the primary contents to this folder can be invoked manually (using Manager or SSA) or as part of the IP Office software upgrade using Manager.
- **/lvmail**
  Contains the system prompts used by Embedded Voicemail. Note that the mailbox messages and greetings are stored in a sub-folder of the **/dynamic** folder.
  - The sub-folder **/AAG** is used to store Embedded Voicemail auto-attendant greetings.
- **/doc**
  Contains initial installation documentation for the system.
- **/dynamic**
  Contains files used by the IP Office and retained through a reboot of the IP Office system.
  - The sub-folder **/lvmail** is used to store individual user and group mailbox messages, name recordings and announcements. The storage capacity for Embedded Voicemail is limited to 15 hours regardless of the capacity of the card.
- **/temp**
  Contains temporary files used by the IP Office and not retained through a reboot of the IP Office system.

The **Optional SD** card can contain a similar set of folders. These are used as an additional backup or they can be used as the source for upgrading the contents of the System SD card.

9.1 Booting from the SD Cards

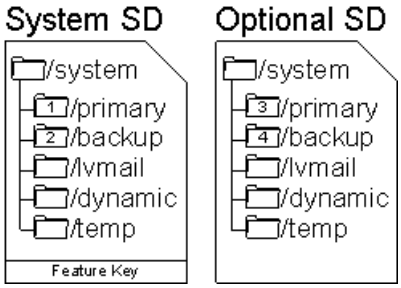

When being powered up, the IP500 V2 control unit looks for a valid ip500v2.bin binary file to load. It does this using the possible source below in the order shown, skipping to the next source if the file is not present or is not valid.

1. System SD card ***/primary*** folder.
2. The control unit's own internal non-volatile memory. Once a system has been installed, it uses its non-volatile memory to keep copies of the configuration and system binary files it is using. These can be used to restore operation during a system reboot. Note that though a system can boot from non-volatile memory, a System SD card must still be present for correct system operation.
3. System SD card ***/backup*** folder.
4. Optional SD card ***/primary*** folder.
5. Optional SD card ***/backup*** folder.
6. If no file is found, the control unit will fallback to making BOOTP requests to the network. IP Office Manager can respond the BOOTP request. See Erasing the Operational Firmware 136.

Once a valid ip500v2.bin file is found, the IP Office control unit will load that firmware. The source from which the control unit binary file was loaded is then used to load further files.

Configuration File Loading

Having installed the necessary system firmware files as above, the IP500 V2 control unit requires a configuration file:

- If the IP500 V2 booted using binary files from an SD card location, it looks for a valid configuration file in the same location.
  - If a configuration file is present and valid, it is loaded.
  - If a configuration file is present but is not valid, load the configuration copy in its non-volatile memory if present, else it assumes a default configuration.
  - If a configuration file is not present, use the non-volatile memory copy as above unless the reboot is as a result of a default system command.
- If the IP500 V2 booted using binary files from its non-volatile memory, it will also load the configuration copy from that location.
  - It will indicate a boot alarm (see below).
  - It will attempt to restore the firmware file in the System SD card's **/primary** folder using the copy in its non-volatile memory.
  - The normal boot up process of upgrading expansion module firmware does not occur. If the **File | Advanced | Upgrade** command is used, only external expansion modules actually present in the system are listed for upgrade.

Post Boot Operation

During normal operation, configuration and binary files sent to the System SD card **/primary** folder using IP Office Manager are also written to the non-volatile memory.

If the system has booted from its non-volatile memory due to an SD card problem, it is still possible to upgrade the ip500v2.bin file using the IP Office upgrade wizard.

Boot Alarms

The following apply if the IP500 V2 boots using software other than that in its System SD **/primary** folder:

- An alarm will be shown in the System Status Application. It will also generate an alarm if the card in any slot is not compatible. These alarms are also output as SNMP, Syslog or email alarms.
- The IP Office Manager **Select IP Office** menu will display an ⚠ icon indicating that the IP Office system is running using software other than from the System SD card's primary folder.
- The configuration can be read but will be read only. Attempting to send a configuration to the system will cause the error message ***Failed to save configuration data. (Internal error)***.

Bypassing the System SD Card Primary Folder

The control unit can be forced to bypass the System SD card's ***/primary*** folder and non-volatile memory when starting. This is done by pressing the **Aux** button while applying power to the control unit.

This action may be necessary if, following an upgrade of the IP Office system, it is determined that a roll back to the previously backed up firmware and configuration is required. Using the **Aux** button should restore system operation using the ***/backup*** folder files while the installer then restores the contents of the ***/primary*** folder to a previous release.

9.2 Creating an IP Office SD Card

The processes below can be applied to Avaya IP Office SD cards. They can also be applied to non-Avaya SD cards for use in a system's Optional SD card slot.

The card must be the following format. For the System SD slot, only Avaya SD cards with a Feature Key should be used.

- SDHC 4GB minimum Class 2+. Single partition FAT32 format.
- **WARNING**
  Avaya supplied SD cards should not be formatted using any other method than the format commands within IP Office Manager and IP Office System Status Application. Formatting the cards using any other method will remove the feature key used for IP Office licensing from the card.

Creating a Card on a Local PC

These processes can be run on an SD card inserted in a card reader on the IP Office Manager PC. That card can then be used in the System SD card slot of a new system or in the Optional SD card slot of an existing system to upgrade that system 125.

Formatting an SD Card

Avaya SD cards should only be formatted using the format options provided within IP Office applications. This process is not normally necessary with Avaya SD cards unless you suspect that the card has been incorrectly formatted elsewhere.

- **WARNING: All File Will Be Erased**
  Note that this action will erase any existing files and folders on the card. Once a card has been formatted, the folders and files required for IP Office operation can be loaded onto the card from the Manager PC using the Recreate IP Office SD Card command.

1. Insert the SD card into a reader slot on the Manager computer.
2. Using IP Office Manager, select **File | Advanced | Format IP Office SD Card**.
3. Select **IP Office A-Law**, **IP Office U-Law**, **IP Office Partner Edition** or **IP Office Norstar Edition**. This selection just sets the card label shown when viewing the card details. It does not affect the actual formatting. Select the label that matches the files set you will be placing on the card.
4. Browse to the card location and click **OK**.
5. The status bar at the bottom of Manager will display the progress of the formatting process.
6. When the formatting is complete, you can use the **Recreate IP Office SD Card** command to load the IP Office folders and files onto the card from the Manager PC.

Recreating an IP Office SD Card

This command can be used with a read-writeable SD card on the Manager PC. It copies the files and folders used by an IP500 V2 system when starting. It updates the card with the version of those files installed with the IP Office Manager application. It includes the binary files for the IP500 V2 system, external expansion modules and phones. It also includes the prompt files for Embedded Voicemail operation.

This process replaces existing files and adds new files. It does not delete files, so for example, any existing Embedded Voicemail messages and greetings are retained. If the card contains dynamic system files such as SMDR records, they are temporarily backed up by Manager and then restored after the card is recreated.

For the card to be used in an IP500 V2 system's **System SD** slot the card must be Avaya SD Feature Key card. The card must be correctly formatted, however a reformat of an existing working card is not necessary before using recreate to update the card contents.

- The source for the files copied to the SD card are the sub-folders of the ***\Memory Cards*** folder under Manager's **Working Directory** (normally ***C:\Program Files Avaya\IP Office\Manager***). However, if the Working Directory is changed to a location without an appropriate set of ***\Memory Cards*** sub-folders, the required set of files will not be copied onto the SD card.

Upgrading a System SD Card

1. Once started do not interrupt this process, for example by removing the SD card. This process takes approximately 15 minutes.
2. Insert the SD card into a card reader on the Manager PC.
3. Using IP Office Manager, select **File | Advanced | Recreate IP Office SD Card**.
4. Select **IP Office A-Law**, **IP Office U-Law**, **IP Office Partner Edition**. or **IP Office Norstar Edition**. This selection will affect how the IP Office systems operates when defaulted with this card present in its **System SD** card slot.
5. Browse to the card location and click **OK**.
6. IP Office Manager will prompt whether you want to include Avaya IP Office Web Manager files as part of the recreate process. Those files are necessary if you want to run IP Office Web Manager 51 to manage the IP Office system into which the card will be loaded or if you want to use on-boarding 108.
7. Manager will start creating folders on the SD card and copying the required files into those folders. This process will take approximately 15 minutes.
8. Do not remove the SD card during the process. Wait until the Manager displays a message.

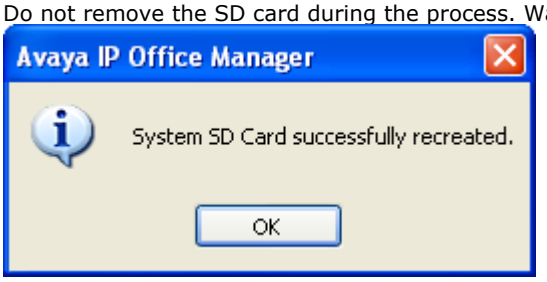

9.3 Viewing the Card Contents

Using IP Office Manager you can view the folders and files on the System SD card and the Optional SD card. You can then use various commands to upload and download files to and from the cards.

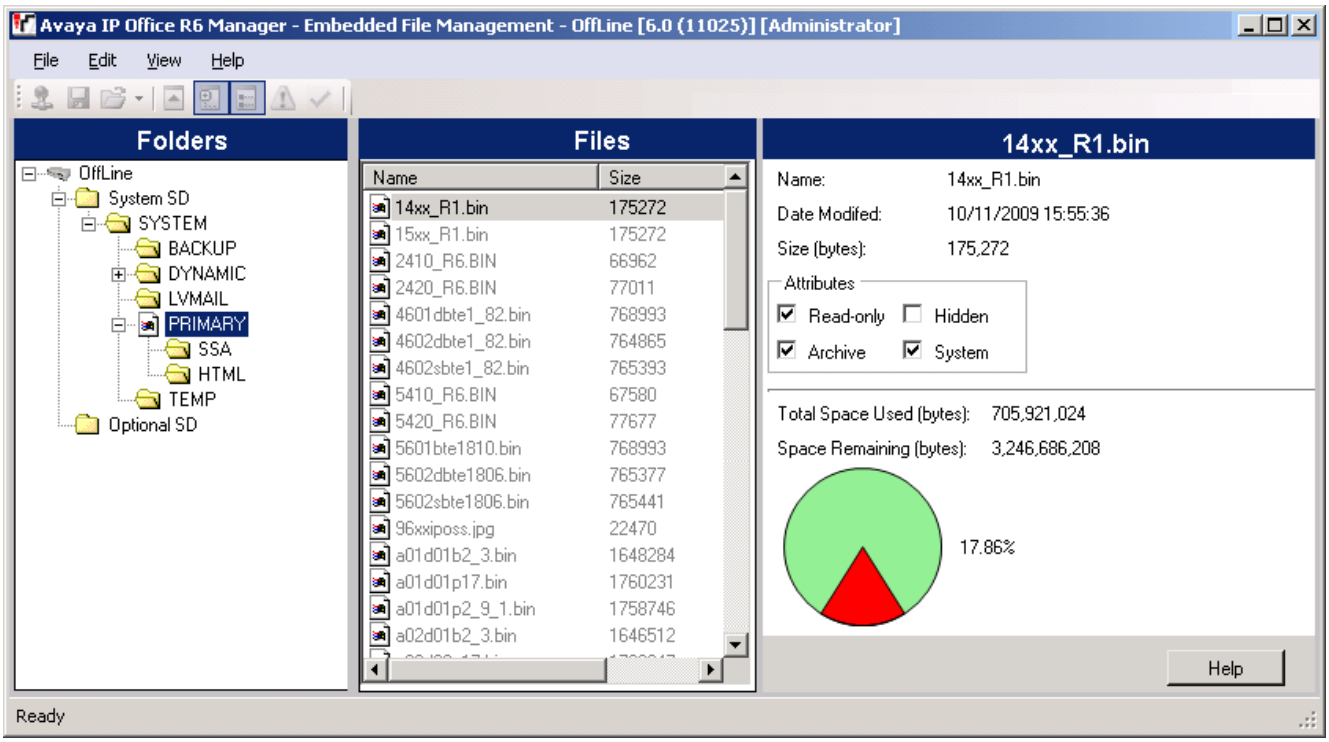

1. Using IP Office Manager, select **File | Embedded File Management**.
2. Using the **Select IP Office** menu, select the IP Office system.
3. The file contents of the memory cards are displayed.

9.4 Backing Up the System SD Card

There are two levels of backup that can be performed.

- **Backup the System SD Card Primary Folder** 148
  The contents of the primary folder on the card can be copied to the backup folder. They files can then be restored if necessary. Both actions can be performed remotely.
- **Backup the Whole System SD Card** 150
  The contents of the whole System SD card can be copied to the Optional SD card. While this can be done remotely, the contents can only be copied back manually using a card reader.

The backup, restore and copy operations will not be performed if the destination card has insufficient space for the files being copied.

9.4.1 Backing Up the Primary Folder

This process copies the contents of the **/primary** folder on the System SD card over the **/backup** folder. Any files with matching file names will be replaced.

This takes approximately 6 minutes.

Using IP Office Manager

1. Using IP Office Manager, select **File | Embedded File Management**.
2. Using the **Select IP Office** menu, select the IP Office system.
3. The file contents of the memory cards are displayed.
4. Select **File | Backup System Files**.
   - The contents of the **/primary** folder on the System SD card will be copied to the **/backup** folder. This process takes approximately 6 minutes.

Using the System Status Application

1. Start System Status 57 and access the IP Office's status output.
2. In the navigation panel select **System**.
3. At the bottom of the screen select **Backup System Files**.
   - The contents of the **/primary** folder on the System SD card will be copied to the **/backup** folder. This process takes approximately 6 minutes.

9.4.2 Restore from the Backup Folder

The contents of the **/backup** folder on the System SD card can be copied to the **/primary** folder. Any files with matching file names will be replaced. The IP Office is then restarted using the files now in the **/primary** folder.

- **! WARNING**
  This process will require the IP Office system to reboot in order to complete the process. Any current calls and services will be ended by the reboot.

Using IP Office Manager

1. Using IP Office Manager, select **File | Embedded File Management**.
2. Using the **Select IP Office** menu, select the IP Office system.
3. The file contents of the memory cards are displayed.
4. Select **File | Restore System Files**.
   - The contents of the **/backup** folder on the System SD card will be copied to the **/primary** folder. The process takes approximately 6 minutes.
   - When the process has been completed, the IP Office system will be restarted.

Using the System Status Application

1. Start System Status 57 and access the IP Office's status output.
2. In the navigation panel select **System**.
3. At the bottom of the screen select **Restore System Files**.
   - The contents of the **/backup** folder on the System SD card will be copied to the **/primary** folder. The process takes approximately 6 minutes.
   - When the process has been completed, the IP Office system will be restarted.

9.4.3 Backing Up to the Optional Card

This process copies all files on the System SD card to the Optional SD card. It includes the **/primary** and **/backup** folders and the Embedded Voicemail files including message files. Any matching files and folders on the Optional SD card are overwritten.

The process is a simple copy. Any files already copied that change while the process are not recopied. Any new files added (for example voicemail messages) while the process is running may not be copied.

This process takes at least 90 minutes and may take much longer depending on the amount of data to be copied, for example it will be longer if Embedded Voicemail is being used by the IP Office system to take messages.

Using IP Office Manager

1. Using IP Office Manager, select **File | Embedded File Management**.
2. Using the **Select IP Office** menu, select the IP Office system.
3. The file contents of the memory cards are displayed.
4. Select **File | Copy System Card**.
   - The contents of the System SD card will be copied to the Optional SD card. This process at least 90 minutes and can take much longer.

Using the System Status Application

1. Start System Status 57 and access the IP Office's status output.
2. In the navigation panel select **System**.
3. Select **Memory Cards**.
4. Select **System Card**.
5. At the bottom of the screen select **Copy System Card**.
   - The contents of the System SD card will be copied to the Optional SD card. This process at least 90 minutes and can take much longer.

9.4.4 Restoring from the Optional Card

The files in the **/primary** folder on the Optional SD card can be copied to the **/primary** folder on the System SD card. Any files with matching file names will be replaced. The IP Office is then restarted using the files now in the System SD card's **/primary** folder.

The restore process is separated into two parts, either copying configuration files from the Optional SD card or copying software files from the Optional SD card. This allows software files to be copied from an Optional SD card without affecting the existing configuration of that system.

- **! WARNING**
  This process will require the IP Office system to reboot in order to complete the process. Any current calls and services will be ended by the reboot.

9.4.4.1 Restoring a Configuration from an Optional Card

The following processes copy the configuration file (***config.cfg***) and licenses file (***keys.txt***). The processes take a few seconds.

- **! WARNING**
  This process will require the IP Office system to reboot in order to complete the process. Any current calls and services will be ended by the reboot.

Copying a Configuration from the Optional SD Card File Using IP Office Manager

1. Using IP Office Manager, select **File | Embedded File Management**.
2. Using the **Select IP Office** menu, select the IP Office system.
3. The file contents of the memory cards are displayed.
4. Select **File | Upgrade Configuration**.
   - The configuration file (***config.cfg***) and licenses file (***keys.txt***) in the ***/primary*** folder on the Optional SD card are copied to the ***/primary*** folder on the System SD card. This process takes approximately a few seconds.
   - When the process has been completed, the IP Office system will be restarted.

9.4.4.2 Restoring Software from an Optional SD Card

These processes copy all files in the folder except the configuration file (***config.cfg***) and licenses file (***keys.txt***). The processes take approximately 5 minutes. These process do not restore Embedded Voicemail prompts (see Upgrading Card Software 153).

- **! IP Office Technical Bulletins**
  Ensure that you have obtained and read the IP Office Technical Bulletin relating to the IP Office software release which you are installing. This bulletin will contain important information that may not have been included in this manual. IP Office Technical Bulletins are available from the Avaya support website (*http://support.avaya.com*).

- **! Upgrade Licenses**
  Some upgrades may require entry of upgrade licenses. It is still possible to upgrade the system without the necessary licenses, however the system will not provide any telephony functions after the upgrade until the appropriate license is added to the system configuration.

- **! WARNING**
  This process will require the IP Office system to reboot in order to complete the process. Any current calls and services will be ended by the reboot.

Copying Software Files from the Optional SD Card Using IP Office Manager

1. Using IP Office Manager, select **File | Embedded File Management**.
2. Using the **Select IP Office** menu, select the IP Office system.
3. The file contents of the memory cards are displayed.
4. Select **File | Upgrade Binaries**.
   - The software files (all files in the folder except the configuration file (***config.cfg***) and licenses file (***keys.txt***)) in the ***/primary*** folder on the Optional SD card are copied to the ***/primary*** folder on the System SD card. This process takes approximately 5 minutes.
   - When the process has been completed, the IP Office system will be restarted.

9.5 Upgrading Card Software

In addition to using the traditional IP Office Upgrade Wizard 123, IP500 V2 control units can be upgraded by loading the required set of firmware files onto the System SD card and rebooting the system.

- **! IP Office Technical Bulletins**
  Ensure that you have obtained and read the IP Office Technical Bulletin relating to the IP Office software release which you are installing. This bulletin will contain important information that may not have been included in this manual. IP Office Technical Bulletins are available from the Avaya support website (*http://support.avaya.com*).

- **! Upgrade Licenses**
  Some upgrades may require entry of upgrade licenses. It is still possible to upgrade the system without the necessary licenses, however the system will not provide any telephony functions after the upgrade until the appropriate license is added to the system configuration.

- **! WARNING**
  This process will require the IP Office system to reboot in order to complete the process. Any current calls and services will be ended by the reboot.

There are a number of ways in which this can be done.

Method	Description	Location	Software Files	Embedded Voicemail Prompts
Using Manager 154	Using IP Office Manager, the contents of the card are compared to the files that Manager has available and are upgraded if necessary.	**Local or Remote**	✓	✓
System SD Card Upgrade 154	In this method, the System SD card is shut down and removed from the control unit. The card's contents are upgraded using IP Office Manager.	**Local**	✓	✓
Upgrade from Optional SD Card 155	This method uses an SD card loaded with the required version of IP Office software. The card is inserted into the control unit's Option SD card slot and its contents copied to the System SD card.	**Local**	✓	–

9.5.1 Upgrading Remotely Using Manager

This process will copy all system files not present on the System SD card and those files which have a different version to those already present on the card. That includes IP Office software files and Embedded Voicemail prompt files.

1. Using IP Office Manager, select **File | Embedded File Management**.
2. Using the **Select IP Office** menu, select the IP Office system.
3. The file contents of the memory cards are displayed.
4. Select **File | Backup System Files**. The contents of the **/primary** folder on the System SD card will be copied to the **/backup** folder. This process takes approximately 6 minutes.
5. Select **File | Upload System Files**. The system files that Manager has will be uploaded to the **/primary** folder on the System SD card. This includes IP Office software files and Embedded Voicemail prompt files. Depending on the files that need to be updated, this process can take up to 40 minutes.

9.5.2 Upgrading the SD Card Locally

The following process can be used if you have physical access to the IP500 V2 control unit. This method be used with a timed reboot, allowing the card upgrade to be done during normal operation hours followed by a reboot outside of normal operation hours.

If the card is being used for Embedded Voicemail, that service is not available while the card is shutdown. Licensed features however will continue running for up to 2 hours while the card is shutdown.

1. Shutdown the System SD memory card 156 and remove it from the control unit.
2. Follow the process for recreating the SD card 145. This process will overwrite the software files on the card with the files available to IP Office Manager. It will not affect any other files, for example the configuration file and Embedded Voicemail mesages. This process takes approximately 15 minutes.
3. When the recreate process has completed, reinsert the card into the control unit's System SD card slot.
4. Using IP Office Manager select **File | Advanced | Reboot**.
5. In the **Select IP Office** menu, select the IP500 V2 system and click **OK**.
6. Select the type of reboot that you want performed and click **OK**.
7. When the system is rebooted, as it restarts it will load the software files in the primary folder of the System SD card.

9.5.3 Upgrading Using an Optional SD Card

This method allows an Optional SD card to be used as the source from which the System SD card is upgraded. It only upgrades the software files, it does not update Embedded Voicemail prompts.

1. Once started do not interrupt this process, for example by removing the SD card. This process takes approximately 15 minutes.
2. Insert the SD card into a card reader on the Manager PC.
3. Using IP Office Manager, select **File | Advanced | Recreate IP Office SD Card**.
4. Select **IP Office A-Law**, **IP Office U-Law**, **IP Office Partner Edition**. or **IP Office Norstar Edition**. This selection will affect how the IP Office systems operates when defaulted with this card present in its **System SD** card slot.
5. Browse to the card location and click **OK**.
6. IP Office Manager will prompt whether you want to include Avaya IP Office Web Manager files as part of the recreate process. Those files are necessary if you want to run IP Office Web Manager 51 to manage the IP Office system into which the card will be loaded or if you want to use on-boarding 108.
7. Manager will start creating folders on the SD card and copying the required files into those folders. This process will take approximately 15 minutes.
8. Do not remove the SD card during the process. Wait until the Manager displays a message.

7. Insert the card into the control unit's Optional SD card slot.
8. Use one of the processes below to copy the software from the Optional SD card to the System SD card. Each of those processes will cause the IP Office system to be restarted.

Copying Software Files from the Optional SD Card Using IP Office Manager

1. Using IP Office Manager, select **File | Embedded File Management**.
2. Using the **Select IP Office** menu, select the IP Office system.
3. The file contents of the memory cards are displayed.
4. Select **File | Upgrade Binaries**.
   - The software files (all files in the folder except the configuration file (***config.cfg***) and licenses file (***keys.txt***)) in the ***/primary*** folder on the Optional SD card are copied to the ***/primary*** folder on the System SD card. This process takes approximately 5 minutes.
   - When the process has been completed, the IP Office system will be restarted.

9.6 Removing SD Cards

Card Removal	Memory cards should always be shutdown 156 before being removed when the system is running. Though the card slot LEDs indicate when data is being written to an card, lack of flashing LED is not a sufficient safeguard. Shutting down the card will disable Embedded Voicemail if being used. If the **System SD** card is removed, features licensed by the card's Feature Key serial number will continue operating for up to 2 hours.

The following processes can be used with SD cards installed in IP500 V2 control units and also with Compact Flash memory cards installed in IP406 V2 control units.

9.6.1 Card Shutdown

Card Removal	Memory cards should always be shutdown 156 before being removed when the system is running. Though the card slot LEDs indicate when data is being written to an card, lack of flashing LED is not a sufficient safeguard. Shutting down the card will disable Embedded Voicemail if being used. If the **System SD** card is removed, features licensed by the card's Feature Key serial number will continue operating for up to 2 hours.

Before a memory card is removed from an IP Office system that is running, the card must be shutdown. Removing a memory card while the system is running may cause file corruption.

Card services can be restarted by either reinserting the card or using a **Start Up** command.

Card Shutdown Using IP Office Manager

1. Using IP Office Manager, select **File | Advanced | Memory Card Commands | Shutdown**.
2. Using the **Select IP Office** menu, select the IP Office system containing the memory card.
3. Click **OK**.
   - At the back of the control unit, confirm that the appropriate memory card LED is off.
   - The card can now be removed in order to perform the necessary maintenance actions.

Card Shutdown Using the System Status Application Application

1. Start System Status 57 and access the IP Office's status output.
2. In the navigation panel select **System**.
3. Select **Memory Cards**.
4. Select either **System Card** or **Optional Card**.
5. At the bottom of the screen select **Shutdown**.
   - At the back of the control unit, confirm that the appropriate memory card LED is off.
   - The card can now be removed in order to perform the necessary maintenance actions.

9.6.2 Card Startup

Reinserting a memory card into a system that is already switched on will automatically restart card operation. However, if the card has been shutdown but not removed, it can be restarted using Manager without requiring a reboot.

Card Startup Using IP Office Manager

1. Using IP Office Manager, select **File | Advanced | Memory Card Commands | Startup**.
2. Using the **Select IP Office** menu, select the IP Office system containing the memory card.
3. Click **OK**.

Card Startup Using the System Status Application

1. Start System Status 57 and access the IP Office's status output.
2. In the navigation panel select **System**.
3. Select **Memory Cards**.
4. Select either **System Card** or **Optional Card**.
5. At the bottom of the screen select **Start Up**.

9.6.3 System Shutdown

IP Office systems running IP Office Release 6.0 can be shut down in order to perform maintenance. The shut down can be either indefinite or for a set period of time after which the IP Office will automatically reboot.

During the shut down process, the current configuration in the control unit's RAM memory is copied to the control units non-volatile memory. For IP500 V2 systems that location is the System SD card.

For control units with memory cards the memory cards can be shutdown and restarted 156 separately from the system.

- **! WARNINGS**
  - A shutdown must always be used to switch off the system. Simply removing the power cord or switching off the power input may cause the loss of configuration data.
  - This is not a polite shutdown, any user calls and services in operation will be stopped. Once shutdown, the system cannot be used to make or receive any calls until restarted.
  - The shutdown process takes up to a minute to complete. When shutting down a system with a Unified Communications Module installed, the shutdown can take up to 3 minutes while the card safely closes all open files and closes down its operating system. During this period the module's LED 1 remains green.
  - When shutdown, the LEDs shown on the system are as follows. Do not remove power from the system or remove any of the memory cards until the system is in this state:
    - LED1 on each IP500 base card installed will also flash red rapidly plus LED 9 if a trunk daughter card is fitted to the base card.
    - The CPU LED on the rear of the system will flash red rapidly.
    - The System SD and Optional SD memory card LEDs on the rear of the system are extinguished.
  - To restart a system when shutdown indefinitely, or to restart a system before the timed restart, switch power to the system off and on again.

System Shutdown Using IP Office Manager

1. Using IP Office Manager, select **File | Advanced | System Shutdown**.
2. Using the **Select IP Office** menu, the **System Shutdown Mode** menu is displayed.

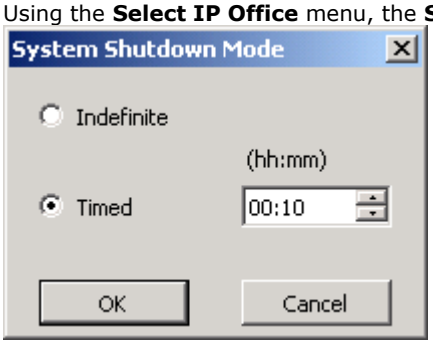

3. Select the type of shutdown required. If **Indefinite** is used, the system can only be restarted by having its power switched off and then on again. If a **Timed** shutdown is selected, the IP Office will reboot after the set time has elapsed.

System Shutdown Using the System Status Application

1. Start System Status 57 and access the IP Office's status output.
2. In the navigation panel select **System**.
3. At the bottom of the screen select **Shutdown System**.
4. Select the time duration for the shutdown or indefinite.

System Shutdown Using the IP500 V2 AUX Button

When the **AUX** button is pressed for more than 5 seconds, the IP500 V2 control unit will shutdown with the restart timer set to 10 minutes.

Chapter 10.
System Components

10. System Components

This section covers the individual components that can comprise an IP Office installation.

- **Control Units** 161
- **IP500 Base Cards** 164
- **IP500 Trunk Daughter Cards** 175
- **IP500 External Expansion Modules** 180
- **Feature Keys/SD Cards** 192
- **Mounting Kits** 194
- **Phones** 196
- **Phone Add-Ons** 217
- **Ancilliary Systems** 221
- **Physical Ports** 230
- **Licenses** 245

Additional information is included for:

- **Hardware Software Compatibility**

- **Hardware PCS Levels** 249
- **TAA Hardware** 249

10.1 IP500 V2 Control Unit

The slots are numbered 1 to 4 from left to right. They can be used in any order. However if the capacity for a particular type of card is exceeded, the card in the rightmost slot will be disabled. The unit must not be used with uncovered slots.

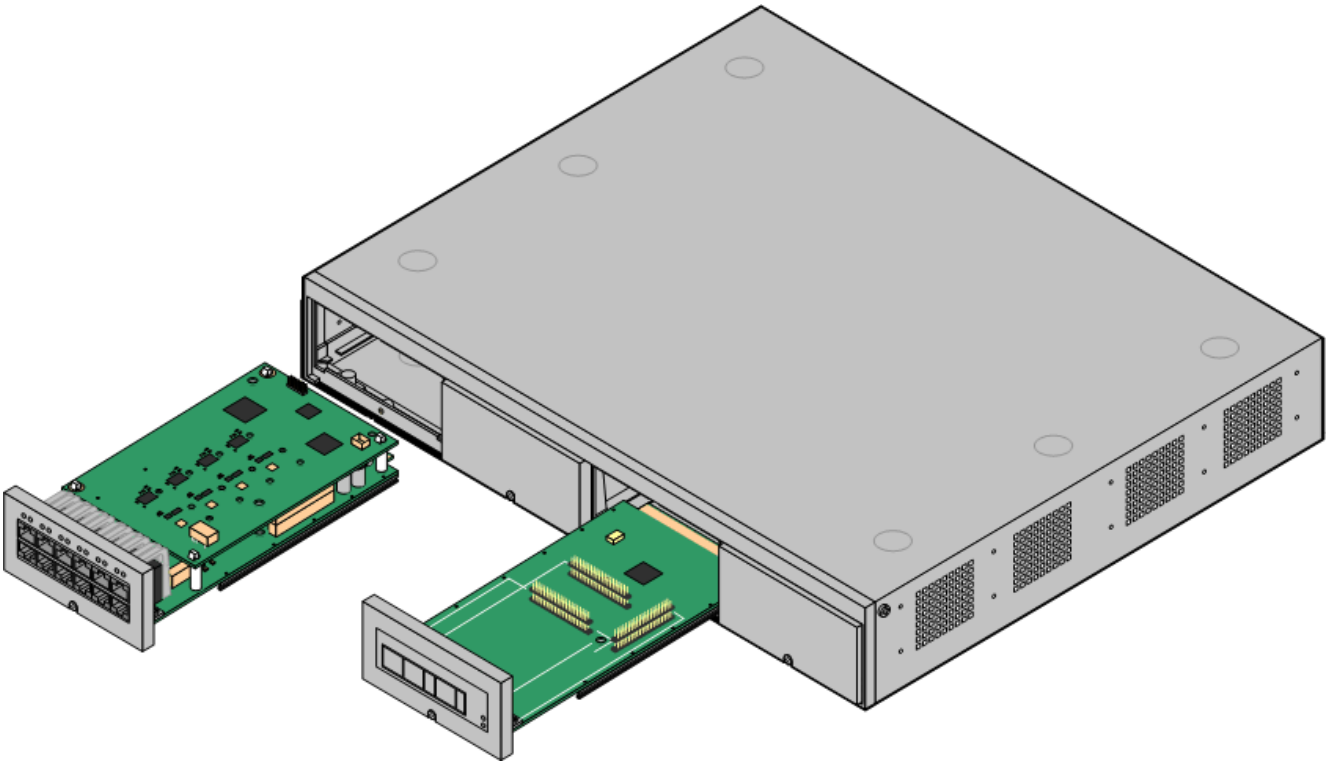

Feature	Capacity
Maximum Extensions	Up to 100 extensions in mode.
Conference Parties	128 as standard but maximum 64 in any individual conference. Silence suppression is applied to conferences with more than 10 parties.
Trunks Cards	4. Any combination of IP500 trunk daughter cards and up to 2 IP400 trunk cards.
Voice Compression Channels	Up to 20 using IP500 Combination cards.
Voicemail Channels	For Embedded Voicemail, up to 6 (2 by default, additional channels require licenses).
Locales	Supported in all IP Office locales 38.
Software Level	IP Office Basic Edition - Quick Mode: 7.0 minimum. Bin file = ip500v2.bin.
Power Supply	Internal power supply unit.
Mounting	Free-standing, rack mounted (requires IPO IP500 RACK MNTG KIT) or wall mounted (requires IPO IP500 WALL MNTG KIT).
Dimensions	Width: 445mm/17.5". Depth: 365mm/14.4". Height: 73mm/2.9"/2U. Clearance: 90mm minimum all sides, 220m at front.
Memory	Maximum configuration file size: 2048KB.

Name		Description	Country	SAP Code
IP500 V2 Control Units	**IPO IP500 V2 Cntrl Unit**	IP Office 500 V2 Control Unit		700476005
	IPO IP500 V2 Cntrl Unit TAA	" Trade Agreements Act 249 compliant variant.		700501510
Avaya SD Memory Card	**IPO IP500 V2 SYS SD CARD AL**	IP500 V2 A-Law SD Card		700479702
	IPO IP500 V2 SYS SD CARD MUL	IP500 V2 Mu-Law SD Card		700479710
	IPO IP500 V2 SYS SD CARD PARTNER	IP500 V2 PARTNER SD Card		700479728
	IPO IP500 V2 SYS SD CARD NORSTAR	IP500 V2 Norstar SD Card		700500948
	AVAYA B5800 BRANCH GATEWAY	IP500 V2 Branch SD Card		700501066
IEC60320 C13 Earthed Power Cord 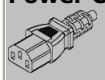	**IPO - PWR LEAD (EARTHED) EU CEE7/7**	CEE7/7	Europe	700289762
	IPO - PWR LEAD (EARTHED) UK	BS1363	United Kingdom	700289747
	IPO - PWR LEAD (EARTHER) US	NEMA5-15P	America	700289770
Mounting Kits	**IPO IP500 RACK MNTG KIT V3**	IPO IP500 WALL MNTG KIT V3		700503160
Miscellaneous	**IP500 Blanking Plate Kit**	IP500 Blanking Plate Kit		700429194

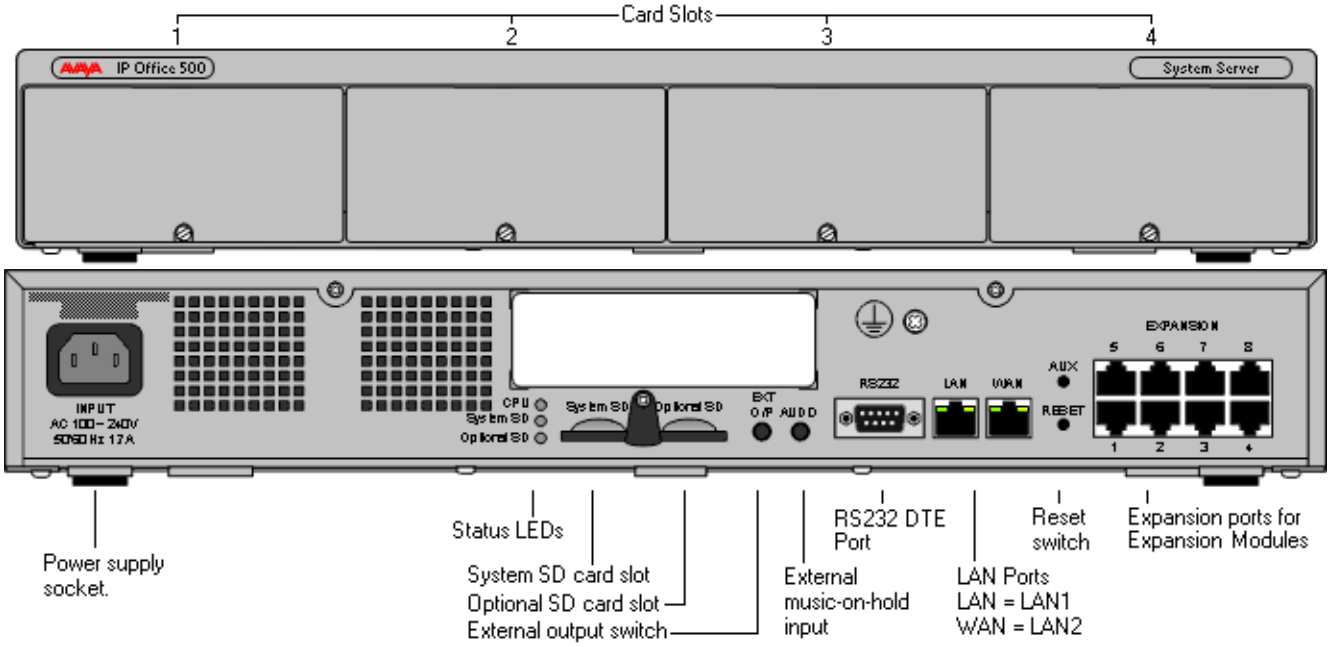

Ports	Description
AUDIO 233	3.5mm Stereo jack socket. Used for external music on hold source input.
AUX 143	If pressed during a restart of the control unit, the control unit skip booting 143 from the ***/primary*** folder on the System SD card. If pressed for more than 5 seconds when a system is running, the control unit will shutdown 116 for 10 minutes.
CPU	Indicates the status of the control unit. • **Alternate red/green** = Starting up. • **Green on** = Okay. • **Red on** = No software. • **Flashing Red** = Error/Shutdown.
EXPANSION 238	RJ45 socket. Used for direct connection to external expansion modules using the Expansion Interconnect cable supplied with the expansion module.
EXT O/P 130	3.5mm Stereo jack socket. Used for switching external relay systems such as door entry controls. The port contains two independent switches controlled by the IP Office.
INPUT 26	AC power input port.
LAN 239	RJ45 socket. The port is a full-duplex 10/100Mbps auto-sensing, MDI crossover port.
Optional SD 140	Used for the Optional SD card. The LED is used in the same way as for the System SD *(see below)*.
RESET 131	This switch is used to restart the IP Office, optionally erasing the configuration and or the core software in the process. See Reset Button 131.
RS232 132	9-Way D-Type socket. Used for system maintenance.
System SD 140	Used for the System SD card,. The LED is used as follows. • **Off** = Card shutdown 156. • **Green on** = Card present. • **Green flashing** = Card in use. • **Orange steady** = Reset imminent. • **Red flashing** = Card initializing or shutting down. • **Red fast flashing** = card full • **Red steady** = Card failure/wrong type.
WAN 239	RJ45 socket. This port is not supported on systems running in IP Office Basic Edition - Quick Mode mode.
⏚	Used for connection of a functional or protective ground 74. Use of a ground for all systems is recommended and for some locales may be a regulatory requirement.

10.2 IP500 Base Cards

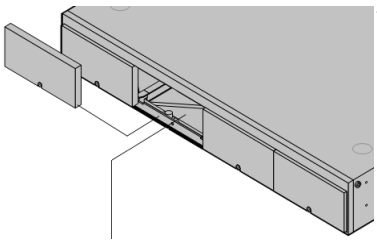

The IP500 and IP500 V2 control units have 4 slots for the insertion of IP500 base cards. The slots are numbered 1 to 4 from left to right. Normally they can be used in any order, however if the capacity for a particular type of card is exceeded, the card in the rightmost slot will be disabled.

Each base card includes an integral front panel with ports for cable connections. Typically the first 8 ports on the left are for connection of extension devices. The 4 ports on the left are used for connection of trunks if a trunk daughter card 22 is added to the base card.

IP500 Digital Station Base Card 171

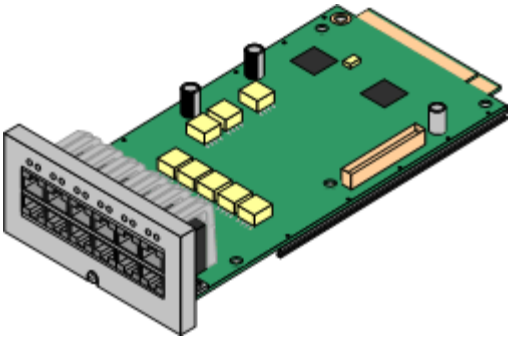

This card provides 8 DS (digital station) ports for the connection of Avaya digital phones.

- The card can be fitted with an IP500 trunk daughter card 22 which uses the base card ports for trunk connection.
- **Maximum:** 3 per control unit.
  - Connections for 4100, 7400, M-Series and T-Series phones use the IP500 TCM8 Digital Station card.

IP500 Analog Phone Base Card 166

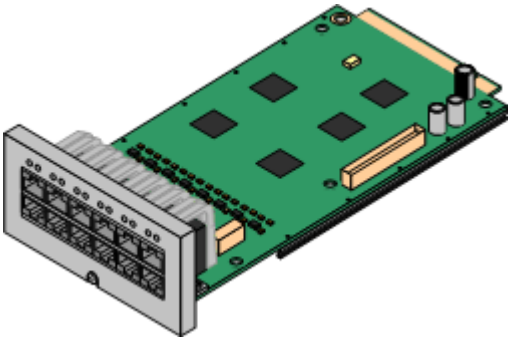

The card is available in two variants, supporting either 2 or 8 analog phone ports.

- The card can be fitted with an IP500 trunk daughter card 22 which uses the base card ports for trunk connection.
- **Maximum:** 4 per control unit.
  - The analog phone ports do not include a ringing capacitor. Where this is a requirement, connection should be via a Master socket containing ringing capacitors.
  - If fitted with an IP500 Analog Trunk daughter card, during power failure phone port 8 is connected to analog trunk port 12.

IP500 TCM8 Digital Station Card 174

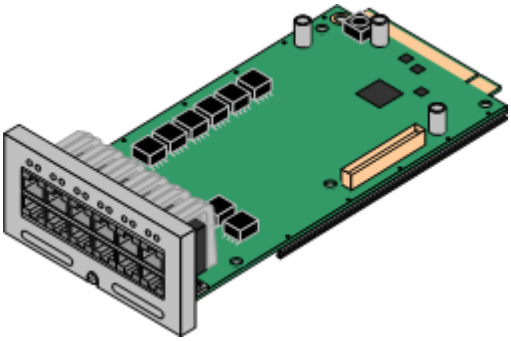

This card provides 8 TCM (digital station) ports for the connection of Avaya 4100, 7400, M-Series and T-Series phones.

- The card can be fitted with an IP500 trunk daughter card 22 which uses the base card ports for trunk connection.
- **Maximum:** 4 per control unit per IP500 V2 control unit.

IP500 BRI Combination Card 170

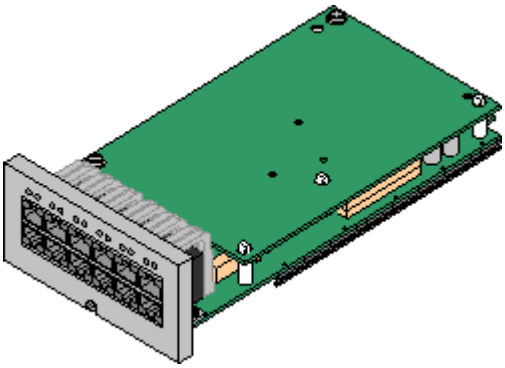

This card provides 6 digital station ports (1-6), 2 analog extension ports (7-8) and 2 BRI trunk ports (9-10, 4 channels). The card also includes 10 voice compression channels.

- This card has a pre-installed IP500 BRI trunk daughter card 22.
- **Maximum:** 2 combination cards per IP500 V2 control unit, regardless of type.
  - IP Office Basic Edition - Quick Mode mode systems are limited to a maximum of 12 BRI channels.

IP500 ATM Combination Card/IP500 ATM Combination Card V2 167

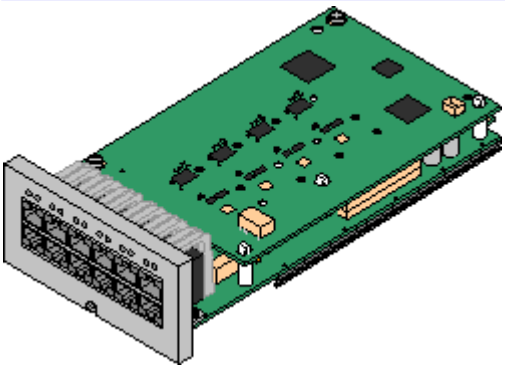

This card provides 6 digital station ports (1-6), 2 analog extension ports (7-8) and 4 analog trunk ports (9-12). The card also includes 10 voice compression channels.

- This card has a pre-installed IP500 analog trunk daughter card 22.
- **Maximum:** 2 combination cards per IP500 V2 control unit, regardless of type.
  - The analog phone ports do not include a ringing capacitor. Where this is a requirement, connection should be via a Master socket containing ringing capacitors.
  - If fitted with an IP500 Analog Trunk daughter card, during power failure phone port 8 is connected to analog trunk port 12.

IP500 ETR6 Base Card 172

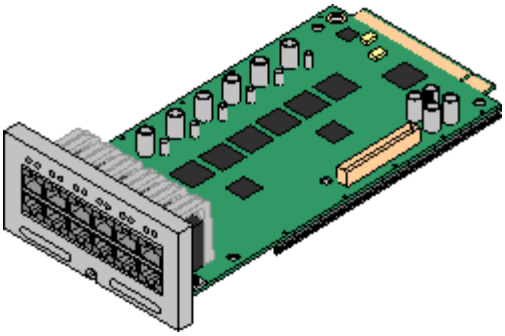

This card is only supported in an IP500 V2 control unit running in IP Office Basic Edition - PARTNER® Mode or IP Office Basic Edition - Quick Mode.

It provides 6 ETR ports for connection of ETR phones. 2 Analog extension ports are also provided for emergency use only with an analog trunk card.

- The card can be fitted with an IP500 trunk daughter card which uses the base card ports for trunk connection.
- **Maximum:** 3 per IP500 V2 control unit.
- The analog phone ports do not include a ringing capacitor. Where this is a requirement, connection should be via a Master socket containing ringing capacitors.
- If fitted with an IP500 Analog Trunk daughter card, during power failure phone ports 7 and 8 are connected to analog trunk port 12. However during normal operation analog phone ports 7 and 8 are not useable.

10.2.1 Analog Phone

This card is used to add analog phone ports to an IP500 and IP500 V2 control unit. It is available in two variants, providing either 2 or 8 analog extension ports.

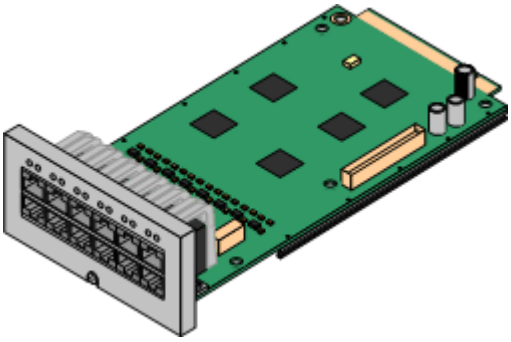

- **Supports**
  Provides either 8 or 2 analog 233 phone ports depending on card variant.
- **IP500 Control Unit:** ✓
- **IP500 V2 Control Unit:** ✓
- **Maximum per Control Unit:** 4.
- **IP500 Trunk Card Support:** ✓ 1.

Port Type	Ports	Features
Analog Extension	**1 to 8**	• Supports ICLID modes DTMFA, DTMFC, DTMFD, FSK and UK20. • REN 2 (1 for external bell device). • Off-Hook current: 25mA • Ring Voltage: 40V. • Intended for connection to two-wire analog phones, the ports do not include a ringing capacitor. For connection to 4-wire analog phones, connection should be via a master socket with ringing capacitors. • If fitted with an analog trunk card, for the Phone 8, during power failure extension port 8 is connected to the analog trunk port 12. **Port LEDs** • No status LEDs are used for analog phone extensions. • LED1 is also used for base card status: • **Red On** = Error • **Red Slow Flash** = Initializing. • **Red Flash every 5 seconds** = Card okay. • **Red Fast Flash** = System shutdown.
Optional Trunk Card Ports	**9 to 12**	The card can be fitted with one trunk daughter card of any type. The trunk daughter card then uses ports 9 to 12 on the base card for its trunk connections. **Port LEDs** LED use depends on the type of daughter card installed on the base card: • LED 9 is also used for daughter card status. • **Red On** = Error • **Red Slow Flash** = Initializing. • **Red Flash every 5 seconds** = Card okay. • **Red Fast Flash** = System shutdown. **Analog Card** • **Green on** = V1: Card installed. V2: Line connected to the port but idle. • **Green flashing** = Line in use. **PRI Card** • **Off** = No trunk present. • **Green on** = Trunk present. • **Green flashing** = Trunk in use. • **Red/Green Fast Flash** (port 9) or **Green Fast Flash** (port 10) = Alarm indication signal (AIS) from the trunk remote end. • **Red with Green Blink** (port 9) or **Green Blink** (port 10) = Port in loopback mode (set through IP Office System Monitor). **BRI Card** • **Off** = No trunk present. • **Green on** = Trunk present. • **Green flashing** = Trunk in use.

Name	Description	SAP Code
IPO 500 Extn Card Phone 2	IP Office 500 Extension Card Phone 2	700431778
IPO 500 Extn Card Phone 8	IP Office 500 Extension Card Phone 8	700417231

10.2.2 ATM Combination Card

These cards are used to add a combination of ports to an IP500 V2 control unit. Not supported by IP500 control units. The newer IP500 ATM Combination Card V2 version is supported by IP Office Release 8.1 Feature Pack 1 and higher only.

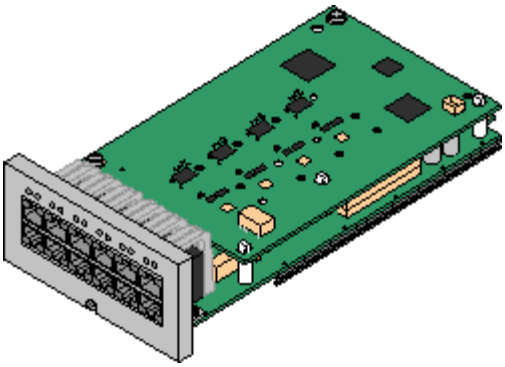

- **Supports**
  - 10 voice compression channels. Codec support is G.711, G729a and G.723 with 64ms echo cancellation. G.722 is supported by IP Office Release 8.0 and higher.
  - 6 Digital Station ports for digital stations 35 (except 3800, 4100, 4400, 7400, M and T-Series).
  - 2 Analog Extension ports.
  - 4 Analog Trunk ports:
    Depending on the version of combination card, V1 or V2, the analog trunk daughter card is equivalent to an IP500 Analog Trunk Card 4 176 V1 or V2 respectively.
- **IP500 Control Unit:** ✗
- **IP500 V2 Control Unit:** ✓
- **Maximum per Control Unit:** 2 combination cards of any type per IP500 V2 control unit.
- **IP500 Trunk Card Support:** ✓ 1. The trunk daughter card is pre-installed and cannot be replaced with another card type.
- **IP Office Software Level:** 6.0+.
  This depends on the version of the card as follow:
  - **V1:** 6.0+. New build PCS04 cards are only supported in systems running IP Office Release 6.1(20), 7.0(12) or 8.0 and higher. Refer to IP Office Technical Tip 237.
  - **V2:** IP Office Release 8.1 Feature Pack 1 or higher.

Port Type	Ports	Features
Digit Station	**1 to 6**	Provides DS 235 ports for digital stations 35 (except 4100, 4400, 7400, M and T-Series). **LEDs** • **Green Flashing** = Phone detected. • **Green On** = Phone active. • LED1 is also used for base card status: • **Red On** = Error • **Red Slow Flash** = Initializing. • **Red Flash every 5 seconds** = Card okay. • **Red Fast Flash** = System shutdown.
Analog Extension	**7 to 8**	• Supports ICLID modes DTMFA, DTMFC, DTMFD, FSK and UK20. • REN 2 (1 for external bell device). • Off-Hook current: 25mA • Ring Voltage: 40V. • Intended for connection to two-wire analog phones, the ports do not include a ringing capacitor. For connection to 4-wire analog phones, connection should be via a master socket with ringing capacitors. • During power failure extension port 8 is connected to the analog trunk port 12. • No status LEDs are used for analog phone extensions.
Analog Trunk	**9 to 12**	• DTMF, ICLID and busy tone detection. • Over-voltage/lightning protection (may still require additional protection equipment 31) . • DTMF and LD (loop disconnect) dialing. • Echo cancellation. **LEDs** • **Green on** = V1: Card installed. V2: Line connected to the port but idle. • **Green flashing** = Line in use. • LED 9 is also used for daughter card status. • **Red On** = Error • **Red Slow Flash** = Initializing. • **Red Flash every 5 seconds** = Card okay.

Port Type	Ports	Features
		• **Red Fast Flash** = System shutdown.

Name	Description	SAP Code
IPO IP500 V2 COMB CARD ATM4	IPO IP500 V2 COMBINATION CARD ATM4	700476013
IPO IP500 V2 COMB CARD ATM4 TAA	" Trade Agreements Act 249 compliant variant.	700501513
IPO IP500 V2 COMB CARD ATM4 V2	IPO IP500 V2 COMBINATION CARD ATM4 V2	700504556

10.2.3 BRI Combination Card

This card is used to add a combination of ports to an IP500 V2 control unit. Not supported by IP500 control units.

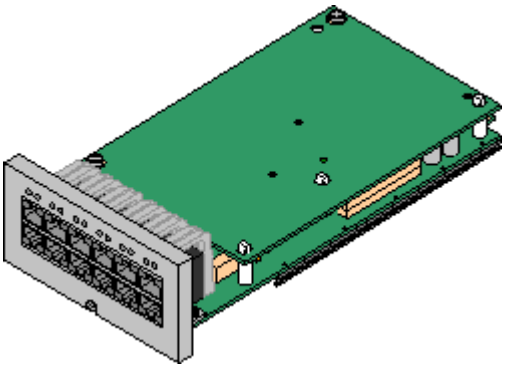

- **Supports**
  - 10 voice compression channels. Codec support is G.711, G729a and G.723 with 64ms echo cancellation. G.722 is supported by IP Office Release 8.0 and higher.
  - 6 Digital Station ports for digital stations 35 (except 3800, 4100, 4400, 7400, M and T-Series).
  - 2 Analog Extension ports.
  - 2 BRI Trunk ports (4 BRI channels).
  - 10 voice compression channels. Codec support is G.711, G729a and G.723 with 64ms echo cancellation. G.722 is supported by IP Office Release 8.0 and higher.
- **IP500 Control Unit:** ✗
- **IP500 V2 Control Unit:** ✓
- **Maximum per Control Unit:** 2 combination cards of any type.
  - IP Office Basic Edition - Quick Mode mode systems are limited to a maximum of 12 BRI channels.
- **IP500 Trunk Card Support:** ✓ 1. The trunk daughter card is pre-installed and cannot be replaced with another card type.

Port Type	Ports	Features
Digit Station	**1 to 6**	Provides DS 235 ports for digital stations 35 (except 4100, 4400, 7400, M and T-Series). **LEDs** • **Green Flashing** = Phone detected. • **Green On** = Phone active. • LED1 is also used for base card status: • **Red On** = Error • **Red Slow Flash** = Initializing. • **Red Flash every 5 seconds** = Card okay. • **Red Fast Flash** = System shutdown.
Analog Extension	**7 to 8**	• Supports ICLID modes DTMFA, DTMFC, DTMFD, FSK and UK20. • REN 2 (1 for external bell device). • Off-Hook current: 25mA • Ring Voltage: 40V. • Intended for connection to two-wire analog phones, the ports do not include a ringing capacitor. For connection to 4-wire analog phones, connection should be via a master socket with ringing capacitors. • No status LEDs are used for analog phone extensions.
BRI Trunk	**9 to 10**	• Each trunk port supports 2B+D channels. • ETSI or AusTS013 basic rate protocol set through the IP Office configuration. **LEDs** • **Off** = No trunk present. • **Green on** = Trunk present. • **Green flashing** = Trunk in use. • LED 9 is also used for daughter card status. • **Red On** = Error • **Red Slow Flash** = Initializing. • **Red Flash every 5 seconds** = Card okay. • **Red Fast Flash** = System shutdown.
Not Used	**11 to 12**	–

Name	Description	SAP Code
IPO IP500 V2 COMB CARD BRI	IPO IP500 V2 COMBINATION CARD BRI	700476021

10.2.4 Digital Station

This card is used to add digital station (DS) extension ports to an IP500 and IP500 V2 control unit. It provides 8 RJ45 DS extension ports for use with Avaya digital phones. A further 4 RJ45 ports are provided for trunk connections when an IP500 trunk card is fitted to this card.

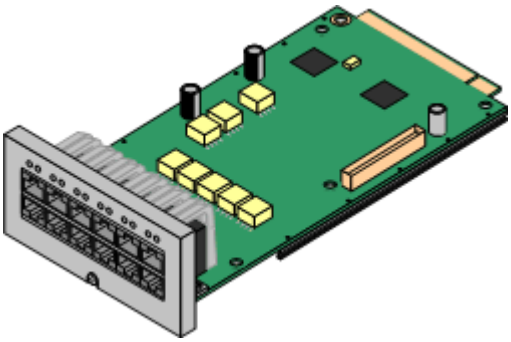

- **Supports**
  Provides 8 DS 235 ports for digital stations 35 (except 3800, 4100, 4400, 7400, M and T-Series).
- **IP500 Control Unit:** ✓
- **IP500 V2 Control Unit:** ✓
- **Maximum per Control Unit:** 3 per control unit.
- **IP500 Trunk Card Support:** ✓ 1.

Port Type	Ports	Features
Digit Station	**1 to 8**	Provides DS 235 ports for digital stations 35 (except 4100, 4400, 7400, M and T-Series). **LEDs** • **Green Flashing** = Phone detected. • **Green On** = Phone active. • LED1 is also used for base card status: • **Red On** = Error • **Red Slow Flash** = Initializing. • **Red Flash every 5 seconds** = Card okay. • **Red Fast Flash** = System shutdown.
Optional Trunk Card Ports	**9 to 12**	The card can be fitted with one trunk daughter card of any type. The trunk daughter card then uses ports 9 to 12 on the base card for its trunk connections. **Port LEDs** LED use depends on the type of daughter card installed on the base card: • LED 9 is also used for daughter card status. • **Red On** = Error • **Red Slow Flash** = Initializing. • **Red Flash every 5 seconds** = Card okay. • **Red Fast Flash** = System shutdown. **Analog Card** • **Green on** = V1: Card installed. V2: Line connected to the port but idle. • **Green flashing** = Line in use. **PRI Card** • **Off** = No trunk present. • **Green on** = Trunk present. • **Green flashing** = Trunk in use. • **Red/Green Fast Flash** (port 9) or **Green Fast Flash** (port 10) = Alarm indication signal (AIS) from the trunk remote end. • **Red with Green Blink** (port 9) or **Green Blink** (port 10) = Port in loopback mode (set through IP Office System Monitor). **BRI Card** • **Off** = No trunk present. • **Green on** = Trunk present. • **Green flashing** = Trunk in use.

Name	Description	SAP Code
IPO 500 Extn Card Dgtl Sta 8	IP Office 500 Extension Card Digital Station 8	700417330
IPO IP500 Extn Card Dgtl Sta 8 TAA	" Trade Agreements Act 249 compliant variant.	700501512

10.2.5 ETR6 Card

This card is used to add 6 ETR phone extension ports to an IP500 V2 control unit. This card is only supported by IP500 V2 systems running in IP Office Basic Edition - PARTNER® Mode or IP Office Basic Edition - Quick Mode (Mu-Law) modes.

It also includes 2 analog extension ports which are for emergency use only when the card is fitted with an analog trunk daughter card. A further 4 RJ45 ports (9 to 12) are provided for trunk connections when an IP500 trunk daughter card is fitted to this card.

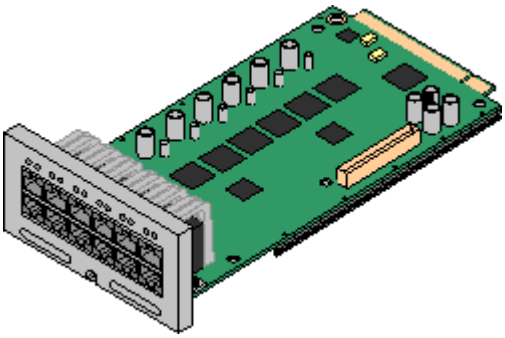

- **Supports**
  ETR and analog phones. Each ETR phone can be used for an ETR or analog phone. Support for ETR 34D phone is limited to a maximum of 2 per ETR6 card and 4 in total.
  - Paging to external paging equipment is not supported via ETR6 ports. It is supported via POT ports.
  - The only analog phones tested by Avaya for IP Office Basic Edition - Quick Mode are the Avaya 6200 Series. If other analog phones are used, it is the customer's own responsibility to ensure that those phones work as required.
- **IP500 Control Unit:** ✗
- **IP500 V2 Control Unit:** ✓
  This card is only supported by IP500 V2 systems running in IP Office Basic Edition - PARTNER® Mode or IP Office Basic Edition - Quick Mode (Mu-Law) modes. The card is not supported in other systems or if the system is changed to A-Law operation.
- **Maximum per Control Unit:** 3.
- **IP500 Trunk Card Support:** ✓ 1.
  The IP500 BRI trunk daughter card is not supported.

Port Type	Ports	Features
ETR Extensions	**1 to 6**	• REN 1. • DTMF dialing only. • Message waiting indication 51V stepped. • ICLID mode Bellcore 202. **LEDs** • No status LED are used for ETR ports. • LED1 is also used for base card status: • **Red On** = Error • **Red Flash every 5 seconds** = Card okay. • **Red Slow Flash** = Initializing. • **Red Fast Flash** = System shutdown.
EF	**7 to 8**	• If fitted with an IP500 Trunk Daughter card, during power failure both these ports are connected to analog trunk port 12. • Supports ICLID modes DTMFA, DTMFC, DTMFD, FSK and UK20. • REN 2 (1 for external bell device). • Off-Hook current: 25mA • Ring Voltage: 40V. • Intended for connection to two-wire analog phones, the ports do not include a ringing capacitor. For connection to 4-wire analog phones, connection should be via a master socket with ringing capacitors. • No status LEDs are used for analog phone extensions.
Optional Trunk Ports	**9 to 12**	Depends on the type of trunk daughter card fitted. The ETR6 can be fitted with either a Analog Trunk 176 card or PRI Trunk 179 card. **LEDs** LED use depends on the type of daughter card installed on the base card: • LED 9 is also used for daughter card status. • **Red On** = Error • **Red Flash every 5 seconds** = Card okay. • **Red Slow Flash** = Initializing. • **Red Fast Flash** = System shutdown. **Analog Card** • **Green on** = V1: Card installed. V2: Line connected to the port but idle. • **Green flashing** = Line in use. **PRI Card** • **Off** = No trunk present. • **Green on** = Trunk present. • **Green flashing** = Trunk in use.

		• **Red/Green Fast Flash** (port 9) or **Green Fast Flash** (port 10) = Alarm indication signal (AIS) from the trunk remote end. • **Red with Green Blink** (port 9) or **Green Blink** (port 10) = Port in loopback mode (set through IP Office System Monitor).

Name	Description	SAP Code
IPO IP500 V2 EXTN CARD ETR6	IPO IP500 V2 EXTN CARD ETR6	700476039

10.2.6 TCM8 Digital Station

This card is used to add TCM RJ45 extension ports to an IP500 V2 control unit. It provides 8 RJ45 extension ports for supported M-Series and T-Series digital stations. It can also be used for 4100 and 7400 Series phone support by connection to a Digital Mobility Solution 221 system.

A further 4 RJ45 ports are provided for trunk connections when an IP500 trunk card is fitted to this card.

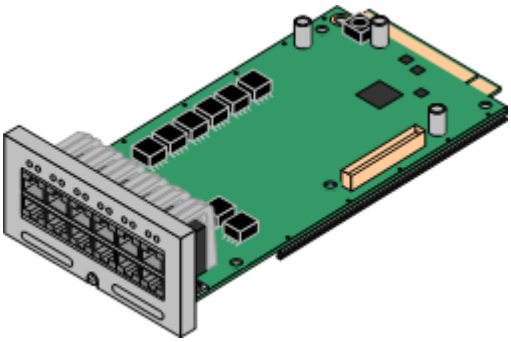

- **Supports**
  Provides 8 TCM ports for supported 4100, 7400, M and T-Series digital stations.
- **IP500 Control Unit:** ✗
- **IP500 V2 Control Unit:** ✓
- **Maximum per Control Unit:** 4.
- **IP500 Trunk Card Support:** ✓ 1.

Port Type	Ports	Features
TCM	**1 to 8**	Cable lengths up to 305 m (1000 ft) using 0.5mm (24AWG) wires do not require a power booster. For TCM phones, lengths up to 790 m (2600 ft) are supported if an auxiliary power supply booster is used. **LEDs** • **Green On** = Phone detected. • LED1 is also used for base card status: • **Red On** = Error • **Red Slow Flash** = Initializing. • **Red Flash every 5 seconds** = Card okay. • **Red Fast Flash** = System shutdown.
Optional Trunk Card Ports	**9 to 12**	The card can be fitted with one trunk daughter card of any type. The trunk daughter card then uses ports 9 to 12 on the base card for its trunk connections. **LEDs** LED use depends on the type of daughter card installed on the base card: • LED 9 is also used for daughter card status. • **Red On** = Error • **Red Slow Flash** = Initializing. • **Red Flash every 5 seconds** = Card okay. • **Red Fast Flash** = System shutdown. **Analog Card** • **Green on** = V1: Card installed. V2: Line connected to the port but idle. • **Green flashing** = Line in use. **PRI Card** • **Off** = No trunk present. • **Green on** = Trunk present. • **Green flashing** = Trunk in use. • **Red/Green Fast Flash** (port 9) or **Green Fast Flash** (port 10) = Alarm indication signal (AIS) from the trunk remote end. • **Red with Green Blink** (port 9) or **Green Blink** (port 10) = Port in loopback mode (set through IP Office System Monitor). **BRI Card** • **Off** = No trunk present. • **Green on** = Trunk present. • **Green flashing** = Trunk in use.

Name	Description	SAP Code
IPO 500 TCM 8 Extn Card Assy	IP Office 500 TCM 8	700500758

10.3 IP500 Trunk Daughter Cards

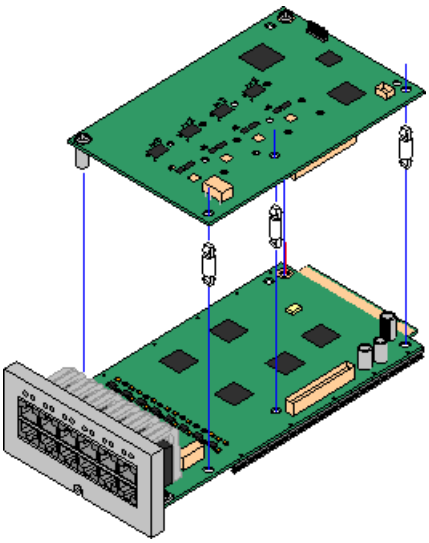

Most IP500 base cards 20 can be fitted with an IP500 trunk daughter cards to support the connection of trunks to the base card.

Each daughter card is supplied with the stand off pillars required for installation and a label to identify the daughter cards presence on the front of the base card after installation.

- IP500 Combination cards are pre-fitted with a trunk daughter card which cannot be removed or changed for another type of trunk daughter card.

IP500 Analog Trunk Card/IP500 Analog Trunk Card V2 176

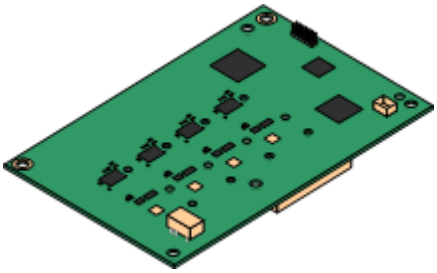

These cards allow the base card to support 4 analog loop-start trunks.

- The analog phone ports do not include a ringing capacitor. Where this is a requirement, connection should be via a Master socket containing ringing capacitors.
- If fitted with an IP500 Analog Trunk daughter card, during power failure phone port 8 is connected to analog trunk port 12.

- **Maximum:** 4 per control unit. The IP500 Analog Trunk Card V2 is only supported in the IP500 V2.

IP500 PRI-U Trunk Card 179

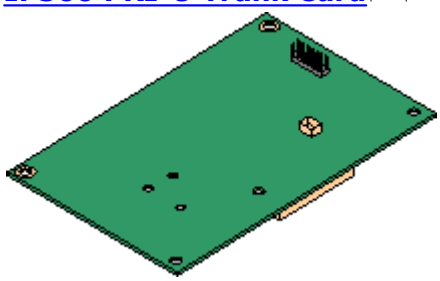

This card allows the base card to support up to 2 PRI trunk connections. The card is available in single and dual port variants. The card can be configured for E1 PRI, T1 robbed bit, T1 PRI or E1R2 PRI trunks.

- **Maximum:** 1 single port card per control unit.
- The IP Office system supports 8 unlicensed B-channels on each IP500 PRI-U port fitted. Additional B-channels, up to the capacity of ports installed and PRI mode selected require **IP500 Universal PRI (Additional Channels)** 248 licenses added to the configuration. These additional channels consume the licenses based on which additional channels are configured as in-service from port 9 of slot 1 upwards. D-channels are not affected by licensing.

IP500 BRI Trunk Card 178

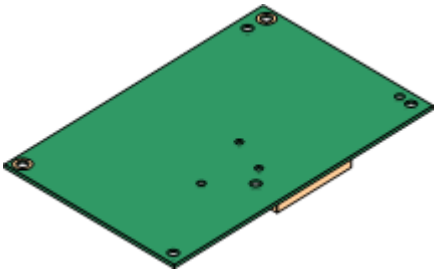

This card allows the base card to support up to 4 BRI trunk connections, each trunk providing 2B+D digital channels. The card is available in 2 port (4 channels) and 4 port (8 channels) variants.

- **Maximum:** 4 per control unit.
  - IP Office Basic Edition - Quick Mode mode systems are limited to a maximum of 12 BRI channels.

10.3.1 Analog Trunk Card

These cards can be added to an IP500 base card to provide that card with support for 4 loop-start analog trunks. The newer IP500 Analog Trunk Card V2 version is supported by IP500 V2 systems running IP Office Release 8.1 Feature Pack 1 or higher only.

This card can be fitted to any IP500 base card.

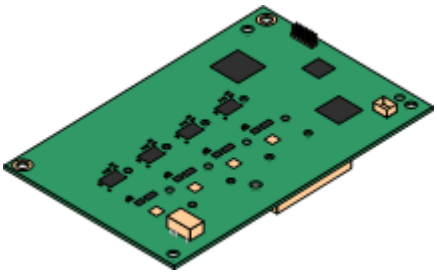

- **IP500 Control Unit - V1:** ✓, **V2:** ✗
- **IP500 V2 Control Unit - V1:** ✓, **V2:** ✓
- **Ports/Channels**
  4 Loop-start analog trunk ports. Connections via the host IP500 base card.
- DTMF, ICLID and busy tone detection.
- Over-voltage/lightning protection (may still require additional protection equipment 31).
- DTMF and LD (loop disconnect) dialing.
- Echo cancellation.
- **Echo Cancellation**
  The card supported echo cancellation that varies depending on the card type.
  - **V1:** Echo cancellation manually selectable to either ***8***, ***16***, ***32***, ***64*** or ***128*** milliseconds or ***Off***. The default is 16 milliseconds.
  - **V2:** Echo cancellation manually selectable to either ***On*** or ***Off***. The default is ***On***. The IP500 Analog Trunk Card V2 also supports echo reduction which is set to ***On*** by default.
- **Service Status/Line Status Indication**
  - **V1:** Detection of individual line status for idle lines is not supported. Therefore, the card LEDs and System Status Application simply indicate that the card is installed and when the line is in use.
  - **V2:** Automatic detection of line status for idle lines is supported. The card LEDs and System Status Application indicate that the individual line is connected and idle or is in use.
- **Impedance Matching**
  - **V1:** For this card only manual impedance matching is useable and only in selected locales.
  - **V2:** This card supports automatic impedance matching at system startup and this mode is enabled by default. Manual or no impedance matching can be used if required. Impedance matching is supported in all locales.
- **Power Failure Port**
  Regardless of the IP500 card hosting it, during power failure pins 4 and 5 of port 12 are connected to pins 7 and 8. In addition, when fitted to an IP500 Analog Phone 8 base card, during power failure extension port 8 is connected to the analog trunk port 12.
- **License:** No license required.
- **Maximum per Control Unit:** 4.
- **IP Office Software Level:**
  This depends on the version of the card as follow:
  - **V1:** 4.0+. IP500 and IP500 V2.
    New build PCS10 and higher cards are only supported in systems running IP Office Release 6.1(20), 7.0(12) or 8.0 and higher. Refer to IP Office Technical Tip 237.
  - **V2:** 8.1 Feature Pack 1+, IP500 V2 only.

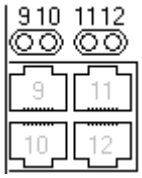

Daughter Card Ports (9-12)
The LEDs for ports 9 to 12 of the IP500 base card are used as follows:

- **Green on** = V1: Card installed. V2: Line connected to the port but idle.
- **Green flashing** = Line in use.
- LED 9 is also used for daughter card status.
  - **Red On** = Error
  - **Red Slow Flash** = Initializing.
  - **Red Flash every 5 seconds** = Card okay.
  - **Red Fast Flash** = System shutdown.

Name	Description	SAP Code
IPO 500 Trnk Anlg 4 Uni	IP Office 500 Trunk Card Analog 4 Universal	700417405
IPO IP500 Trunk Card Anlg 4 V2	IP Office 500 Trunk Card Analog 4 Universal V2	700503164

10.3.2 BRI Trunk Cards

This card can be added to an IP500 base card to provide that card with support for BRI-To 234 trunks. The card is available in 8 channel (4 physical trunks) or 4 channel (2 physical trunks) variants.

This card can be fitted to any IP500 base card.

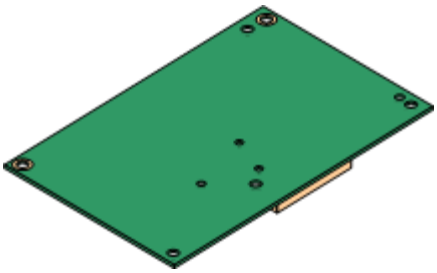

- **IP500 Control Unit:** ✓
- **IP500 V2 Control Unit:** ✓
- **Ports/Channels**
  2 or 4 BRI trunk ports. Connections via ports 9 to 12 of the host IP500 base card.
  - Each trunk port supports 2B+D channels.
  - ETSI or AusTS013 basic rate protocol set through the IP Office configuration.
- **License:** No license required.
- **Maximum per Control Unit:** 4.
  - IP Office Basic Edition - Quick Mode mode systems are limited to a maximum of 12 BRI channels.
- **IP Office Software Level:** 4.0+.
- This card is approved for use in the following countries:

Brazil.	New Zealand.
China.	Russia.
India.	South Africa.
Argentina.	United Arab Emirates (UAE).
Australia.	European Union (EU).

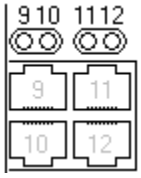

Daughter Card Ports (9-12)
The LEDs for ports 9 to 12 of the IP500 base card are used as follows:

- **Off** = No trunk present.
- **Green on** = Trunk present.
- **Green flashing** = Trunk in use.

- LED 9 is also used for daughter card status.
  - **Red On** = Error
  - **Red Slow Flash** = Initializing.
  - **Red Flash every 5 seconds** = Card okay.
  - **Red Fast Flash** = System shutdown.

Name	Description	SAP Code
IPO 500 Trnk BRI 4 Uni	IP Office 500 Trunk Card Basic Rate 4 Universal	700417413
IPO IP500 TRNK BRI 4 UNI TAA	" Trade Agreements Act 249 compliant variant.	700501515
IPO 500 Trnk BRI 8 Uni	IP Office 500 Trunk Card Basic Rate 8 Universal	700417421

10.3.3 PRI Trunk Cards

This card can be added to an IP500 base card to provide that card with support for PRI trunks. The card is available in single port or dual port variants.

This card can be fitted to any IP500 base card.

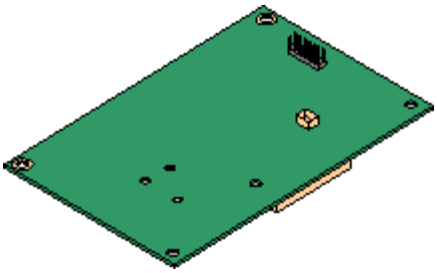

- **IP500 Control Unit:** ✓
- **IP500 V2 Control Unit:** ✓
- **Ports/Channels**
  1 or 2 PRI trunk ports 243. Each port supports the following PRI line types. On dual port cards, both ports will be the same line type. The line type selection can be changed using IP Office Manager. The options available depend on the IP Office operation mode and locale.
    - E1 PRI (30B+D channels per port).
    - E1R2 PRI (30B channels per port).
    - T1 robbed bit (24B channels per port) or T1 PRI (23B+D channels per port).
  - The required mode can be selected within IP Office Manager by right-clicking on the line icon and selecting **Change Universal PRI Card Line Type** and then selecting the required line type.
  - Physical trunk connection is via ports 9 and 10 of the host IP500 base card.
  - Port 11 and 12 can be used as test points for connection of test and monitoring equipment for the adjacent port.
- **Licenses**
  The IP Office system supports 8 unlicensed B-channels on each IP500 PRI-U port fitted. Additional B-channels, up to the capacity of ports installed and PRI mode selected require **IP500 Universal PRI (Additional Channels)** licenses added to the configuration. These additional channels consume the licenses based on which additional channels are configured as in-service from port 9 of slot 1 upwards. D-channels are not affected by licensing.
- **Maximum per Control Unit:** 1 single port card per control unit. Not supported in conjunction with BRI trunk cards in the same system.
- **Software Level:** 4.1+.

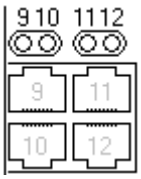

Daughter Card Ports (9-12)
The LEDs for ports 9 to 12 of the IP500 base card are used as follows:

- **Off** = No trunk present.
- **Green on** = Trunk present.
- **Green flashing** = Trunk in use.
- **Red/Green Fast Flash** (port 9) or **Green Fast Flash** (port 10) = Alarm indication signal (AIS) from the trunk remote end.
- **Red with Green Blink** (port 9) or **Green Blink** (port 10) = Port in loopback mode (set through IP Office System Monitor).

- LED 9 is also used for daughter card status.
  - **Red On** = Error
  - **Red Slow Flash** = Initializing.
  - **Red Flash every 5 seconds** = Card okay.
  - **Red Fast Flash** = System shutdown.

Name	Description	SAP Code
IPO 500 TRNK PRI UNVRSL SNGL	IP Office 500 Trunk Card Primary Rate 1 Universal	700417439
IPO IP500 TRNK PRI UNVRSL SNGL TAA	" Trade Agreements Act 249 compliant variant.	700501514
IPO 500 TRNK PRI UNIVRSL DUAL	IP Office 500 Trunk Card Primary Rate 2 Universal	700417462
IPO IP500 TRNK PRI UNVSL DUAL TAA	" Trade Agreements Act 249 compliant variant.	700501517

10.4 IP500 Expansion Modules

The following IP500 external expansion modules are supported by IP Office Release 8.1. Each module uses an external power supply unit 25 supplied with the module. A locale specific power cord 26 for the PSU must be ordered separately.

The external module can be stacked on top of the control unit. They can also be wall or rack mounted using one of the IP Office mounting kits 194.

- Systems running in IP Office Basic Edition - Quick Mode mode support up to 8 external expansion modules so long as the system extensions limit is not exceeded.

- **IP500 Digital Station Module** 183
  Provides, depending on variant, an additional 16 or 30 DS 235 ports for supported Avaya DS digital phones 35.

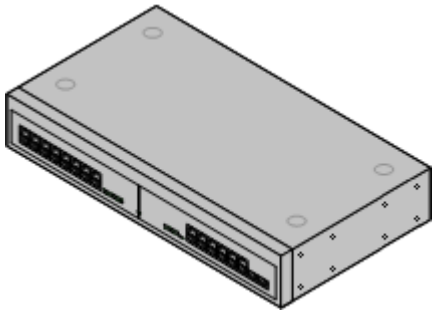

- **IP500 Digital Station A Module** 185
  Provides, depending on variant, an additional 16 or 30 TCM ports for supported Avaya TCM digital phones 35. Supported by IP500 V2 only.

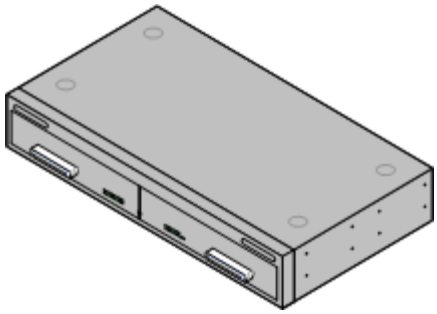

- **IP500 Digital Station B Module** 188
  Provides, depending on variant, an additional 16 or 30 RJ45 ports. For IP Office Release 8.1 Service Pack 9 and higher these modules support DS 235 ports for supported Avaya DS digital phones 35 only.

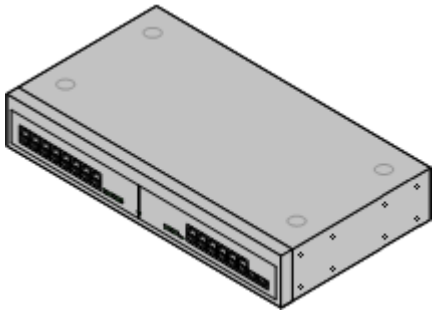

- **IP500 Phone Module** 190
  Provides, depending on variant, an additional 16 or 30 PHONE 241 ports for analog phones.

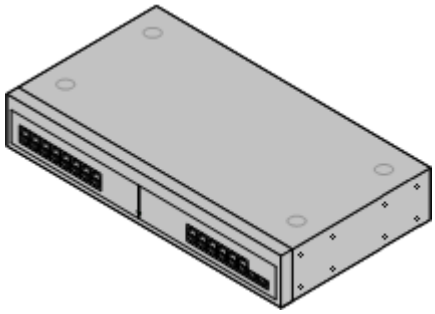

10.4.1 Analog Trunk 16

The IP500 Analog Trunk module can be used to add 16 additional analog trunks to an IP Office system. The module supports both loop-start and, with suitable grounding, ground-start trunks.

- In IP Office Basic Edition - Quick Mode modes, only 1 Analog Trunk module is supported.
- **WARNING**
  In all IP Office installations, any module being used for analog trunk connections must be connected to a functional earth 30.
- **WARNING**
  Within areas of high lightning risk, any module using analog trunk connections must be connected to a protective ground 30 and to surge protection equipment 31 (an Avaya 146G Surge Protector).

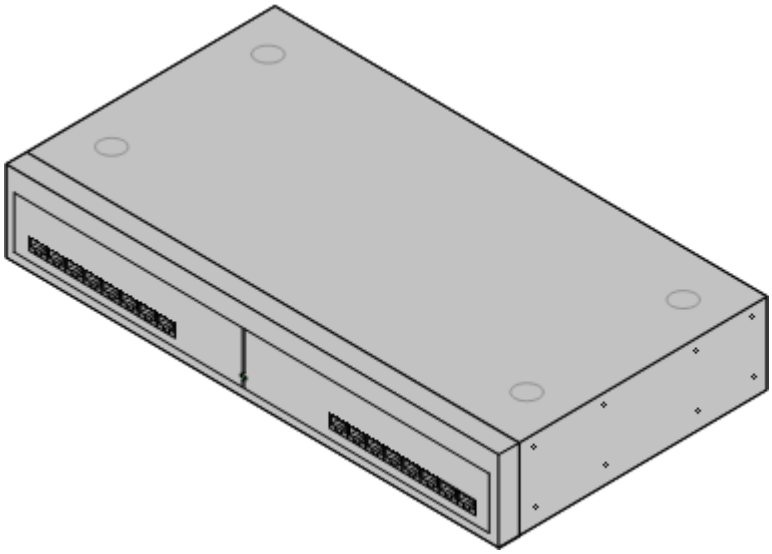

Feature	Details
Supported on	IP500 and IP500 V2.
Locales	This module is currently only supported in North American locales.
Software Level	IP Office core software level 1.0 minimum. Bin file = naatm16.bin.
Included	Power supply unit (see below) and Expansion Interconnect cable.
Power Supply	The module is supplied with a 2-pin, 40W external power supply unit. The PSU has an integral power cord for connection to the module's DC I/P socket. A locale specific IEC60320 C7 power cord 25 for the external PSU is required but is not supplied with the module.
Mounting	The module is designed as a free-standing module that can be stacked on or under other IP Office modules. The module can be rack or wall mounted using the IPO IP500 RACK MNTG KIT V3 194.
Dimensions	Width: 445mm/17.5". Depth: 245mm/9.7". Height: 71mm/2.8"/2U.
Weight	Unboxed: 2.9Kg/6.6lbs. Boxed: 4.2Kg/9.4lbs.

Module Front

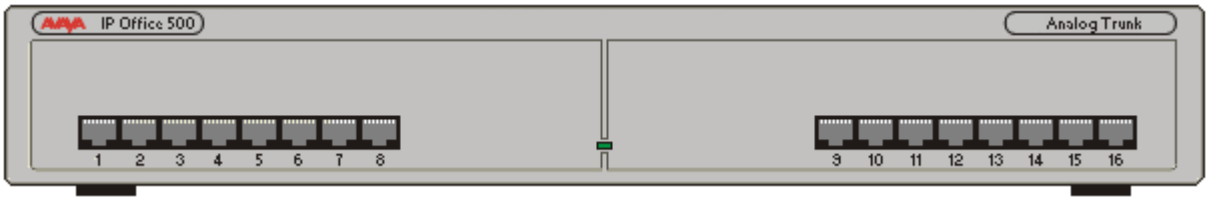

Port LEDs	None
Module Center LED	The center LED on all external expansion modules is used to indicate the overall state of the module as follows: • **Red flashing** = Module starting up/Loading firmware. • **Red on** = Error. • **Green on** = Module okay.

Module Rear

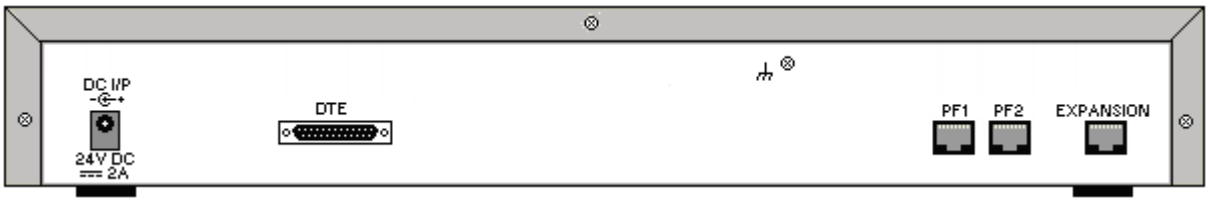

Ports	Description
ANALOG 233	RJ45 socket. Used for connection to analog trunks. Ports can be configured as either loop-start or ground-start trunks through the IP Office configuration. In the event of power failure, Analog ports 1 and 2 are directly connected to analog extension ports PF1 and PF2 respectively. If used the connected phones must be clearly labeled as power failure devices. This is only supported for loop-start analog trunks.
DC I/P 235	DC power input port. Used for connection of the power lead from an Avaya 40W external power supply unit supplied with the expansion module. A locale specific IEC60320 C7 power cord 25 for the external PSU is required but is not supplied with the module.
DTE 132	25-Way D-Type socket. For Avaya use only.
EXPANSION 238	RJ45 Socket. Used for direct connection to an Expansion port on an IP Office control unit using the Expansion Interconnect cable supplied with the module.
PF 240	RJ45 socket. Power failure analog extension ports. See Analog section above.
⏚	Ground point. Used for connection of a functional earth 30 if required. On older modules where this screw is not present, the top-center cover screw should be used instead. • IMPORTANT In all IP Office installations, any module being used for analog trunk connections must be connected to a functional earth 30. • ⚠ WARNING Within areas of high lightning risk, any module using analog trunk connections must be connected to a protective ground 30 and to surge protection equipment 31.

Part Codes and Related Equipment

All expansion modules are supplied with a base software level and should be upgraded to match the core software of the control unit in the IP Office system. Expansion modules include an external power supply unit (PSU) and an appropriate interconnect cable. They do not include a locale specific power cord for the external PSU or any phone extension cables.

Item	Variant	Country	SAP Code
IPO IP500 EXP MOD ANLG TRNK 16	**America**	America	700449473
IPO IP500 EXP MOD ANLG TRNK 16 TAA	" Trade Agreements Act 249 compliant variant.	America	700501511
IEC60320 C7 Power Cord	**NEMA1-15**	America	700213390
Mounting Kit	**IPO IP500 RACK MNTG KIT V3**	All	700503160

10.4.2 Digital Station 16/30

IP Office 500 Digital Station modules can be used to add additional DS ports 235 to an IP Office system. The module is available in 16 and 30 port variants, referred to as the IP500 Digital Station 16 and IP500 Digital Station 30 respectively. For phones requiring a TCM port, for example M-Series and T-Series phones, use IP500 Digital Station 16A and 30A modules 185.

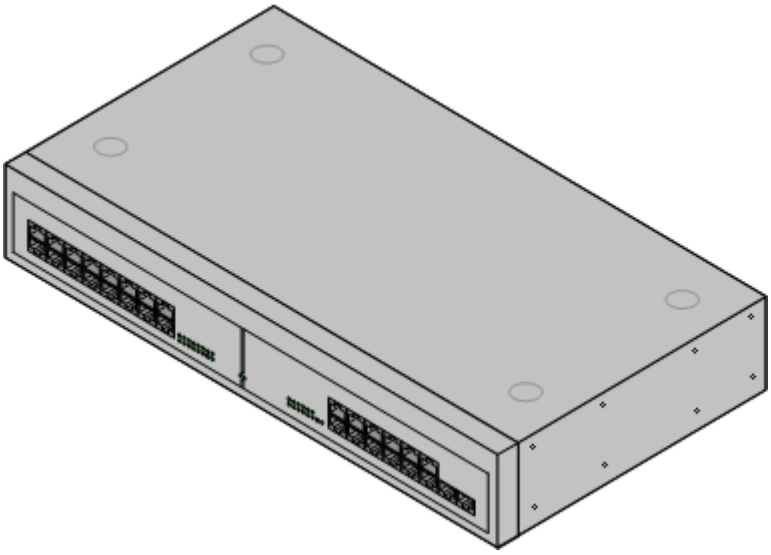

Feature	Details
Supported on	IP500 and IP500 V2.
Locales	Supported in all IP Office locales 38.
Software Level	IP Office core software level 2.1(31) minimum. Bin file = nadcpV2.bin.
Included	Power supply unit (see below) and Expansion Interconnect cable.
Power Supply	The module is supplied with a Earthed 3-Pin, 60W external power supply module. The PSU has an integral power cord for connection to the module's DC I/P socket. A locale specific IEC60320 C13 power cord 25 for the external PSU is required but is not supplied with the module.
Mounting	The module is designed as a free-standing module that can be stacked on or under other IP Office modules. The module can be rack or wall mounted using the IPO IP500 RACK MNTG KIT V3 194.
Dimensions	Width: 445mm/17.5". Depth: 245mm/9.7". Height: 71mm/2.8".
Weight	Unboxed: 3.5Kg/7.8lbs. Boxed: 4.8Kg/10.8lbs. (Based on DS30)

Module Front

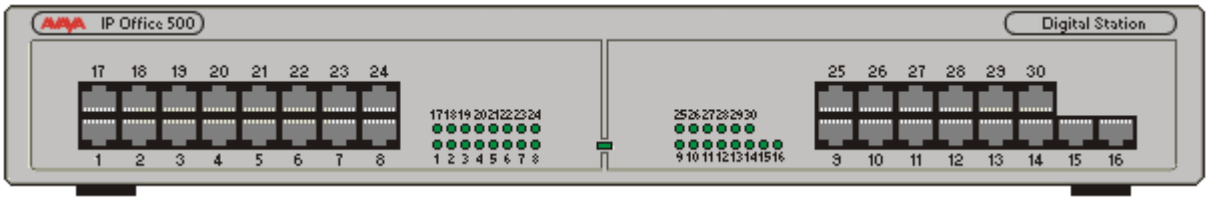

Port LEDs	• **Green Flashing** = Phone detected. • **Green On** = Phone active.
Module Center LED	The center LED on all external expansion modules is used to indicate the overall state of the module as follows: • **Red flashing** = Module starting up/Loading firmware. • **Red on** = Error. • **Green on** = Module okay.

Module Rear

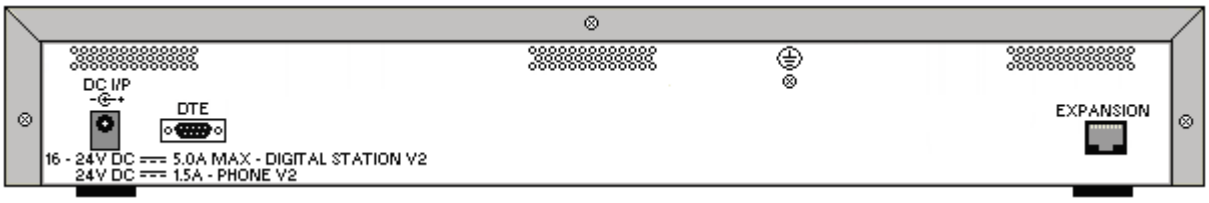

Port	Description
DC I/P 235	DC power input port. Used for connection of the power lead from an Avaya earthed 60W external power supply unit supplied with the expansion module. A locale specific IEC60320 C13 power cord 25 for the external PSU is required but is not supplied with the module.
DS 235	RJ45 socket. Digital Station port. Used for connection of IP Office supported DS phones 35. If connected to an out-of-building extension 31, the connection must be made via additional IROB barrier devices in addition to the buildings primary protection. The module must also be connected to a protective ground.
DTE 132	9-Way D-Type socket. For Avaya use only.
EXPANSION 238	RJ45 Socket. Used for direct connection to an Expansion port on an IP Office control unit using the Expansion Interconnect cable supplied with the module.
⏚	Protective Ground point. Use of a protective ground is required for all installations, see Grounding (Earthing) 74. Where the module is connected to analog extensions in another building, an IP Office Phone Barrier Box V2 (101V) is required at both ends, see Lightning Protection/Out-of-Building Connections 31.

Part Codes and Related Equipment

All expansion modules are supplied with a base software level and should be upgraded to match the core software of the control unit in the IP Office system. Expansion modules include an external power supply unit (PSU) and an appropriate interconnect cable. They do not include a locale specific power cord for the external PSU or any phone extension cables.

Item	Variant	Country	SAP Code
IPO IP500 EXP MOD DGTL STA 16	**16 Ports**	All	700449499
IPO IP500 EXP MOD DGTL STA 16 TAA	" Trade Agreements Act 249 compliant variant.		–
IPO IP500 EXP MOD DGTL STA 30	**30 Ports**		700426216
IEC60320 C13 Power Cord 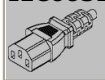	**CEE7/7**	Europe	700289762
	BS1363	United Kingdom	700289747
	NEMA5-15P	America	700289770
Mounting Kit	**IPO IP500 RACK MNTG KIT V3**	All	700503160

10.4.3 Digital Station 16A/30A

These modules can be used to add additional ports for Avaya digital (non-IP) extensions for TCM phones, for example M-Series and T-Series phones. The module is available in 16 and 30 port variants, referred to as the IP500 Digital Station 16A and IP500 Digital Station 30A respectively. For phones requiring DS ports, for example 1400 Series and 9500 Series phones, see the Digital Station 16 and 30 modules 183.

The modules are available with RJ21 connectors (1 on the 16 port version, 2 on the 30 port version).

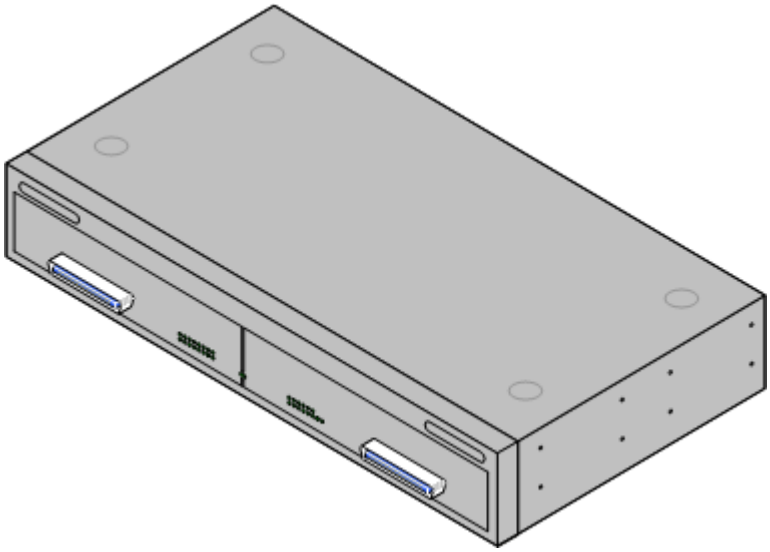

Feature	Details
Supported on	IP500 V2 only.
Locales	Supported in all IP Office locales 38.
Software Level	IP Office Release 7.0 minimum (TCM only). Bin file = nadcpaV1.bin.
Included	Power supply unit (see below) and Expansion Interconnect cable.
Power Supply	The module is supplied with a Earthed 3-Pin, 60W external power supply module. The PSU has an integral power cord for connection to the module's DC I/P socket. A locale specific IEC60320 C13 power cord 25 for the external PSU is required but is not supplied with the module.
Mounting	The module is designed as a free-standing module that can be stacked on or under other IP Office modules. The module can be rack or wall mounted using the IPO IP500 RACK MNTG KIT V3 194.
Dimensions	Width: 445mm/17.5". Depth: 245mm/9.7". Height: 71mm/2.8".
Weight	Unboxed: 3.5Kg/7.8lbs. Boxed: 4.8Kg/10.8lbs. (Based on DS30A RJ21)

Module Front

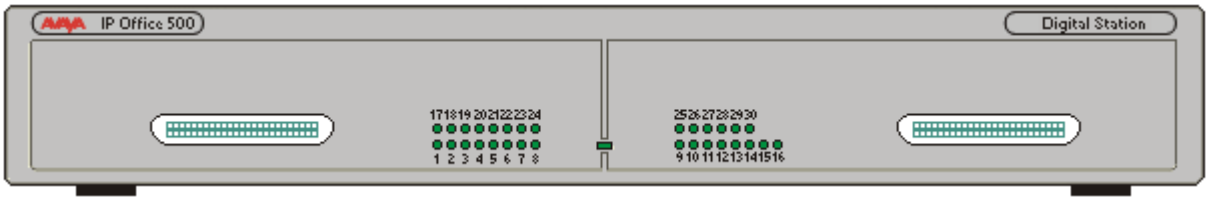

Port LEDs	• **Green On** = Phone detected.
Module Center LED	The center LED on all external expansion modules is used to indicate the overall state of the module as follows: • **Red flashing** = Module starting up/Loading firmware. • **Red on** = Error. • **Green on** = Module okay. • **Green flashing** = Module starting up/Loading firmware (IP500 DS16A/30A module only).

Module Rear

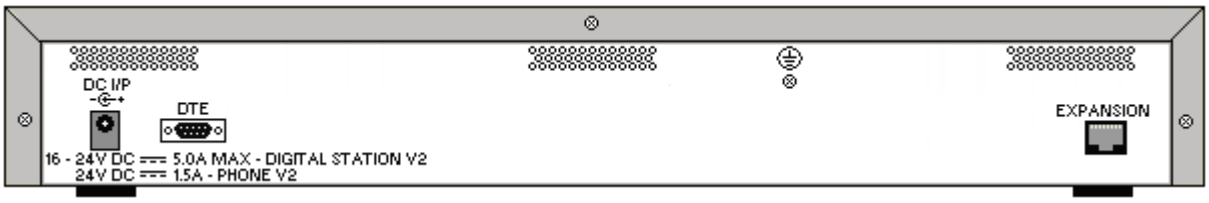

Ports	Description
DC I/P 235	DC power input port. Used for connection of the power lead from an Avaya earthed 60W external power supply unit supplied with the expansion module. A locale specific IEC60320 C13 power cord 25 for the external PSU is required but is not supplied with the module.
RJ21 244	For IP Office Release 7.0, the modules support just phones requiring TCM ports 244.
DTE 132	9-Way D-Type socket. For Avaya use only.
EXPANSION 238	RJ45 Socket. Used for direct connection to an Expansion port on an IP Office control unit using the Expansion Interconnect cable supplied with the module.
⏚	Protective Ground point. Use of a protective ground is required for all installations, see Grounding (Earthing) 74. Where the module is connected to analog extensions in another building, an IP Office Phone Barrier Box V2 (101V) is required at both ends, see Lightning Protection/Out-of-Building Connections 31.

Part Codes and Related Equipment

All expansion modules are supplied with a base software level and should be upgraded to match the core software of the control unit in the IP Office system. Expansion modules include an external power supply unit (PSU) and an appropriate interconnect cable. They do not include a locale specific power cord for the external PSU or any phone extension cables.

Item	Variant	Country	SAP Code
IPO 500 Digital Station 16A RJ21 UNIT ASSY	**RJ21**	All	700500699
IPO 500 Digital Station 30A RJ21 UNIT ASSY	**RJ21**		700500698
IEC60320 C13 Power Cord 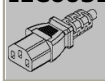	**CEE7/7**	Europe	700289762
	BS1363	United Kingdom	700289747
	NEMA5-15P	North America	700289770
Mounting Kit	**IPO IP500 RACK MNTG KIT V3**	All	700503160

RJ21 Cable Pin Out

The following pin-out is used for the RJ21 ports.

1st RJ21 Connector

Port		Pin	Wire
1	Tip	26	White/Blue
	Ring	1	Blue/White
2	Tip	27	White/Orange
	Ring	2	Orange/White
3	Tip	28	White/Green
	Ring	3	Green/White
4	Tip	29	White/Brown
	Ring	4	Brown/White
5	Tip	30	White/Slate
	Ring	5	Slate/White
6	Tip	31	Red/Blue
	Ring	6	Blue/Red
7	Tip	32	Red/Orange
	Ring	7	Orange/Red
8	Tip	33	Red/Green
	Ring	8	Green/Red
9	Tip	34	Red/Brown
	Ring	9	Brown/Red
10	Tip	35	Red/Slate
	Ring	10	Slate/Red
11	Tip	36	Black/Blue
	Ring	11	Blue/Black
12	Tip	37	Black/Orange
	Ring	12	Orange/Black
13	Tip	38	Black/Green
	Ring	13	Green/Black
14	Tip	39	Black/Brown
	Ring	14	Brown/Black
15	Tip	40	Black/Slate
	Ring	15	Slate/Black
16	Tip	41	Yellow/Blue
	Ring	16	Blue/Yellow
Not Used		42	Yellow/Orange
		17	Orange/Yellow
		43	Violet/Slate
		08	Slate/Violet

2nd RJ21 Connector

Port		Pin	Wire
1	Tip	26	White/Blue
	Ring	1	Blue/White
2	Tip	27	White/Orange
	Ring	2	Orange/White
3	Tip	28	White/Green
	Ring	3	Green/White
4	Tip	29	White/Brown
	Ring	4	Brown/White
5	Tip	30	White/Slate
	Ring	5	Slate/White
6	Tip	31	Red/Blue
	Ring	6	Blue/Red
7	Tip	32	Red/Orange
	Ring	7	Orange/Red
8	Tip	33	Red/Green
	Ring	8	Green/Red
9	Tip	34	Red/Brown
	Ring	9	Brown/Red
10	Tip	35	Red/Slate
	Ring	10	Slate/Red
11	Tip	36	Black/Blue
	Ring	11	Blue/Black
12	Tip	37	Black/Orange
	Ring	12	Orange/Black
13	Tip	38	Black/Green
	Ring	13	Green/Black
14	Tip	39	Black/Brown
	Ring	14	Brown/Black
Not Used		40	Black/Slate
		15	Slate/Black
		41	Yellow/Blue
		16	Blue/Yellow
		42	Yellow/Orange
		17	Orange/Yellow
		43	Violet/Slate
		08	Slate/Violet

10.4.4 Digital Station 16B/30B

This type of module can be used to add additional RJ45 ports for digital telephones. For IP Office Release 8.1 Service Pack 9 and higher these modules support DS 235 mode ports only.

The modules are available in 16 and 30 port variants, referred to as the IP500 DS16B and IP500 DS30B respectively.

- These modules only support the following DS phones: 1400 Series, 2400 Series, 3800 Series, 4400 Series, 5400 Series and 9500 Series.

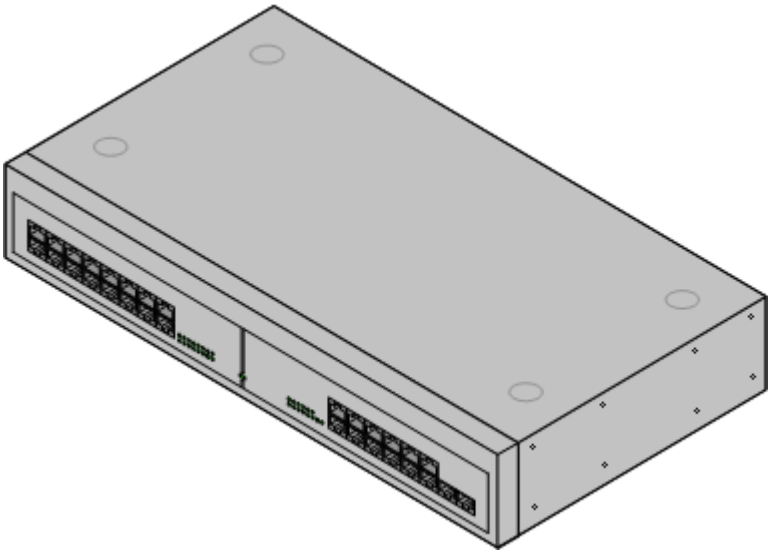

Feature	Details
Locales	Supported in all IP Office locales 38.
Software Level	For IP Office Release 8.1 Service Pack 9 and higher these modules support DS ports only.
Included	Power supply unit (see below) and Expansion Interconnect cable.
Power Supply	The module is supplied with a Earthed 3-Pin, 60W external power supply module. The PSU has an integral power cord for connection to the module's DC I/P socket. A locale specific IEC60320 C13 power cord 25 for the external PSU is required but is not supplied with the module.
Mounting	The module is designed as a free-standing module that can be stacked on or under other IP Office modules. The module can be rack or wall mounted using the IPO IP500 RACK MNTG KIT V3 194.
Dimensions	Width: 445mm/17.5". Depth: 245mm/9.7". Height: 71mm/2.8".
Weight	Unboxed: 3.5Kg/7.8lbs. Boxed: 4.8Kg/10.8lbs. (Based on DS30)

Module Front

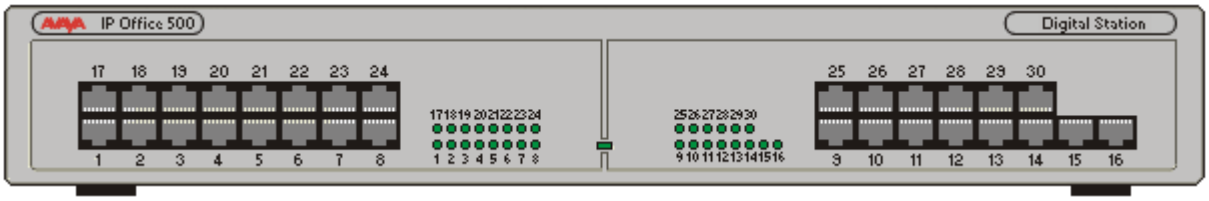

Port LEDs	• **Green Flashing** = Phone detected. • **Green On** = Phone active.
Module Center LED	The center LED on all external expansion modules is used to indicate the overall state of the module as follows: • **Red flashing** = Module starting up/Loading firmware. • **Red on** = Error. • **Green on** = Module okay.

Module Rear

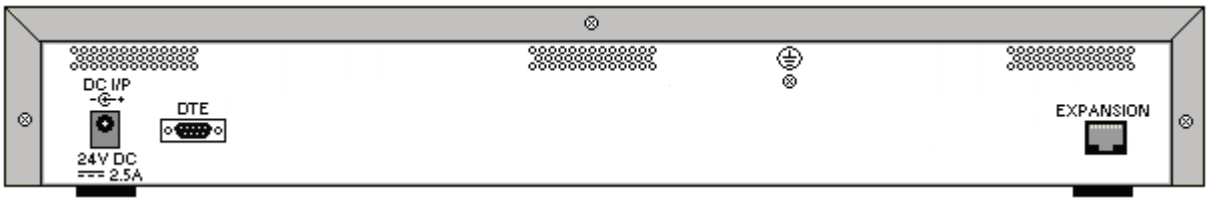

Port	Description
DC I/P 235	DC power input port. Used for connection of the power lead from an Avaya earthed 60W external power supply unit supplied with the expansion module. A locale specific IEC60320 C13 power cord 25 for the external PSU is required but is not supplied with the module.
DS 235	RJ45 socket. Digital Station port. Used for connection of IP Office supported DS phones 35. If connected to an out-of-building extension 31, the connection must be made via additional IROB barrier devices in addition to the buildings primary protection. The module must also be connected to a protective ground.
DTE	9-Way D-Type socket. For Avaya use only.
EXPANSION 238	RJ45 Socket. Used for direct connection to an Expansion port on an IP Office control unit using the Expansion Interconnect cable supplied with the module.
⏚	Protective Ground point. Use of a protective ground is required for all installations, see Grounding (Earthing) 74. Where the module is connected to analog extensions in another building, an IP Office Phone Barrier Box V2 (101V) is required at both ends, see Lightning Protection/Out-of-Building Connections 31.

Part Codes and Related Equipment

All expansion modules are supplied with a base software level and should be upgraded to match the core software of the control unit in the IP Office system. Expansion modules include an external power supply unit (PSU) and an appropriate interconnect cable. They do not include a locale specific power cord for the external PSU or any phone extension cables.

Item	Variant	Country	SAP Code
IPO IP500 EXP MOD DGTL STA 16	**16 Ports**	All	700501585
IPO IP500 EXP MOD DGTL STA 30	**30 Ports**	All	700501586
IEC60320 C13 Power Cord 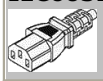	**CEE7/7**	Europe	700289762
	BS1363	United Kingdom	700289747
	NEMA5-15P	America	700289770
Mounting Kit	**IPO IP500 RACK MNTG KIT V3**	All	700503160

10.4.5 Phone 16/30

IP500 Phone modules can be used to add additional PHONE ports to an IP Office system.

The module is available in 16 and 30 port variants, referred to as the IP500 Phone 16 and IP500 Phone 30 respectively.

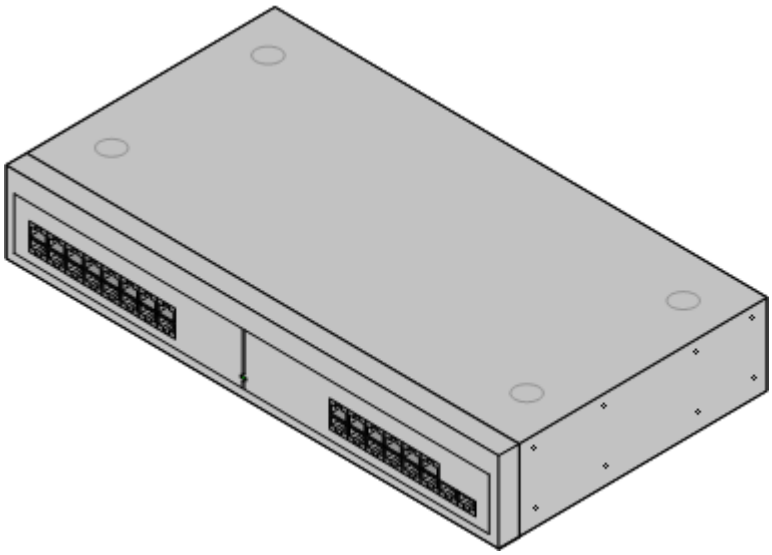

Feature	Details
Supported on	IP500 and IP500 V2.
Locales	Supported in all IP Office locales 38.
Software Level	IP Office core software level 2.1(36) minimum. Bin file = dvpots.bin.
Included	Power supply unit (see below) and Expansion Interconnect cable.
Power Supply	The module is supplied with a Earthed 3-Pin, 60W external power supply unit. The PSU has an integral power cord for connection to the module's DC I/P socket. A locale specific IEC60320 C13 power cord 25 for the external PSU is required but is not supplied with the module.
Mounting	The module is designed as a free-standing module that can be stacked on or under other IP Office modules. The module can be rack or wall mounted using the IPO IP500 RACK MNTG KIT V3 194.
Dimensions	Width: 445mm/17.5". Depth: 245mm/9.7". Height: 71mm/2.8".
Weight	Unboxed: 3.1Kg/6.94lbs. Boxed: 4.4Kg/9.7lbs. (Based on Phone 30 V2)

Module Front

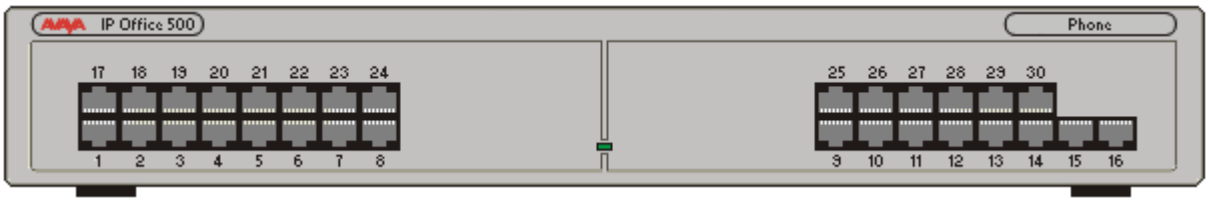

Module Center LED	The center LED on all external expansion modules is used to indicate the overall state of the module as follows: • **Red flashing** = Module starting up/Loading firmware. • **Red on** = Error. • **Green on** = Module okay. • **Green flashing** = Module starting up/Loading firmware (IP500 DS16A/30A module only).

Module Rear

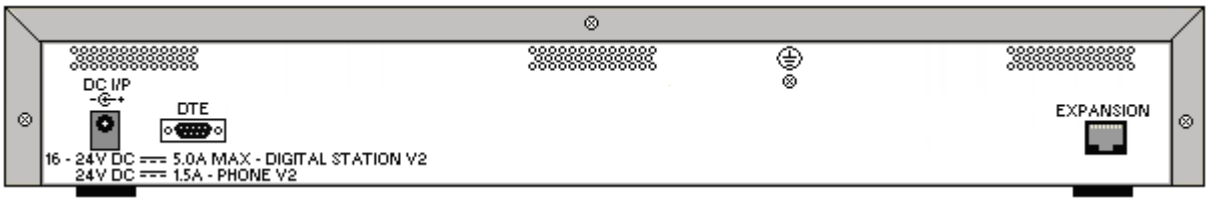

Ports	Description
DC I/P 235	DC power input port. Used for connection of the power lead from an Avaya earthed 60W external power supply unit supplied with the expansion module. A locale specific IEC60320 C13 power cord 25 for the external PSU is required but is not supplied with the module.
DTE 132	9-Way D-Type socket. For Avaya use only.
EXPANSION 238	RJ45 Socket. Used for direct connection to an Expansion port on an IP Office control unit using the Expansion Interconnect cable supplied with the module.
PHONE 241	RJ45 socket. Used for connection of analog phones. Intended for two-wire analog phones. For connection to 4-wire analog phones connection should be via a master socket with ringing capacitors. If connected to an out-of-building extension 31, the connection must be made via additional IP Office Barrier Boxes 128 in addition to the buildings primary protection. The module must also be connected to a protective ground.
⏚	Protective Ground point. Use of a protective ground is required for all installations, see Grounding (Earthing) 30. Where the module is connected to analog extensions in another building, an IP Office Phone Barrier Box V2 (101V) is required at both ends, see Lightning Protection/Out-of-Building Connections 31.

Part Codes and Related Equipment

All expansion modules are supplied with a base software level and should be upgraded to match the core software of the control unit in the IP Office system. Expansion modules include an external power supply unit (PSU) and an appropriate interconnect cable. They do not include a locale specific power cord for the external PSU or any phone extension cables.

Item	Variant	Country	SAP Code
IPO IP500 EXP MOD PHONE 16	**16 Ports**	All	700449507
IPO IP500 EXP MOD PHONE 30	**30 Ports**	All	700426224
IEC60320 C13 Power Cord 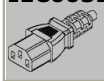	**CEE7/7**	Europe	700289762
	BS1363	United Kingdom	700289747
	NEMA5-15P	America	700289770
Mounting Kit	**IPO IP500 RACK MNTG KIT V3**	All	700503160
IPO PHONE BARRIER BOX (101V) RHS		All	700385495

10.5 Feature Keys

The serial number of the feature key fitted to the IP Office control unit is used as the basis for all licenses issued for that IP Office system and is used to regularly re-validate the licenses. If the feature key is removed, over the next few hours licensed features will stop operating.

10.5.1 IP500 V2 System SD Cards

This type of feature key is used with IP500 V2 control units and is a mandatory item. The control unit must be fitted with one of these feature keys even if no licenses are being used.

The serial number for licenses issued for use with this type of feature key is printed on the card label and prefixed by **FK**. This type of feature key is also a memory card used for other system functions and to provide Embedded Voicemailif required.

- By default the card can be used for 2 ports of Embedded Voicemail. Additional ports up to a maximum of 6 can be enabled by the addition of licenses 246. The voicemail mailbox message and prompt capacity supports 2 simultaneous connections and 15 hours of storage. This can be expanded up to 6 channels by the addition of licenses, each of which enables an additional two channels and an additional 5 hours of storage.
- ⚠ **WARNING**
  These cards should only be formatted using IP Office Manager or IP Office System Status Application. The cards should only be removed from a system after either a card shut down 156 or a system shut down 156.

Feature Key Dongle	SAP Code
IPO IP500 V2 SYS SD CARD A-LAW	700479702
IPO IP500 V2 SYS SD CARD MU-LAW	700479710
IPO IP500 V2 SYS SD CARD PARTNER	700479728
IPO IP500 V2 SYS SD CARD NORSTAR	700500948

- **IP Office U-Law SD Card**
  A system fitted with this type of card will default to U-Law telephony. For pre-IP Office Release 7.0 software, the system will default to IP Office standard mode. For IP Office Release 7.0+, the system will default to IP Office Basic Edition - Quick Mode ***Key System*** operation. Intended for North American locales.
- **IP Office A-Law SD Card**
  A system fitted with this type of card will default to A-Law telephony. For pre-IP Office Release 7.0 software, the system will default to IP Office standard mode. For IP Office Release 7.0+, the system will default to IP Office Basic Edition - Quick Mode ***PBX System*** operation. Intended for locales outside North America.
- **IP Office Partner Edition SD Card**
  A system fitted with this type of card will default to U-Law telephony and IP Office Basic Edition - PARTNER® Mode ***Key System*** operation. Supported only in North American locales.
- **IP Office Norstar Edition SD Card**
  A system fitted with this type of card will default to A-Law telephony and IP Office Basic Edition - Norstar Mode ***Key System*** operation. Supported only in Middle East and North African locales.
- **Avaya B5800 Branch Gateway**
  This type of SD card intended to be used with B5800 Branch Gateway systems. The Avaya Branch Gateway System SD card can only be used for Avaya Branch Gateway operation and cannot be used to change modes to IP Office. You also cannot use or change an IP Office SD card for use with an B5800 Branch Gateway system. B5800 Branch Gateway systems are not covered by this documentation.

Embedded Voicemail

The System SD card can be used to provide Embedded Voicemail for the system. Unlicensed, the Embedded Voicemail provided by the system supports 2 simultaneous connections and 15 hours of storage. This can be expanded up to 6 channels by the addition of licenses 246, each of which enables an additional two channels and an additional 5 hours of storage.

For full details of Embedded Voicemail setup and configuration, refer to the Embedded Voicemail Installation manual. The cards are preloaded with the following languages:

- Arabic, Chinese-Mandarin, Chinese-Cantonese, Danish, Dutch, English-UK, English-US, Finnish, French, French-Canadian, German, Italian, Korean, Norwegian, Portuguese, Portuguese Brazilian, Russian, Swedish, Spanish, Spanish-Latin, Spanish-Argentinean.

PCM Encoding

- **A-Law or Mu-Law**
  PCM (Pulse Code Modulation) is a method for encoding voice as data. In telephony, two methods PCM encoding are widely used, A-law and Mu-law (also called U-law). Typically Mu-law is used in North America and a few other locations while A-law by the rest of the world. As well as setting the correct PCM encoding for the region, the A-Law or Mu-Law setting of an IP Office system when it is first started affects a wide range of regional defaults relating to line settings and other values.
  - For IP400 IP Office systems, each control units was manufactured as either an A-Law variant or a Mu-Law variant.
  - For IP500 and IP500 V2 systems, the encoding default is set by the type of Feature Key installed when the system is first started.

10.6 Mounting Kits

The following mounting kits are available for use with IP Office systems.

10.6.1 IP500 Wall Mounting Kits

IP500, IP500 V2 control units and IP500 external expansion modules can be wall mounted. To do this, a wall mounting kit is required in addition to suitable wall fixings. Wall mounting is not supported for IP400 external expansion modules.

In addition to the existing environmental requirements 42 for an IP Office system, the following additional requirements apply when wall mounting a unit:

- The wall surface must be vertical, flat and vibration free. Attachment to temporary walls is not supported.
- Only the screws provided with the mounting kit should used to attach the brackets to the control unit.

The following wall mounting kits exist.

- **IPO IP500 RACK MNTG KIT V3** *(SAP Code 700503160)*
  IPO IP500 RACK MNTG KIT V2 *(SAP Code 700500923)*
  These kits can be used for wall and rack mounting of an IP500 or IP500 V2 control unit and IP500 external expansion modules. The kits incorporates cable routing at the front and rear of the unit. For wall mounted control units it allows orientation of the control unit base card slots to the left or to the right.

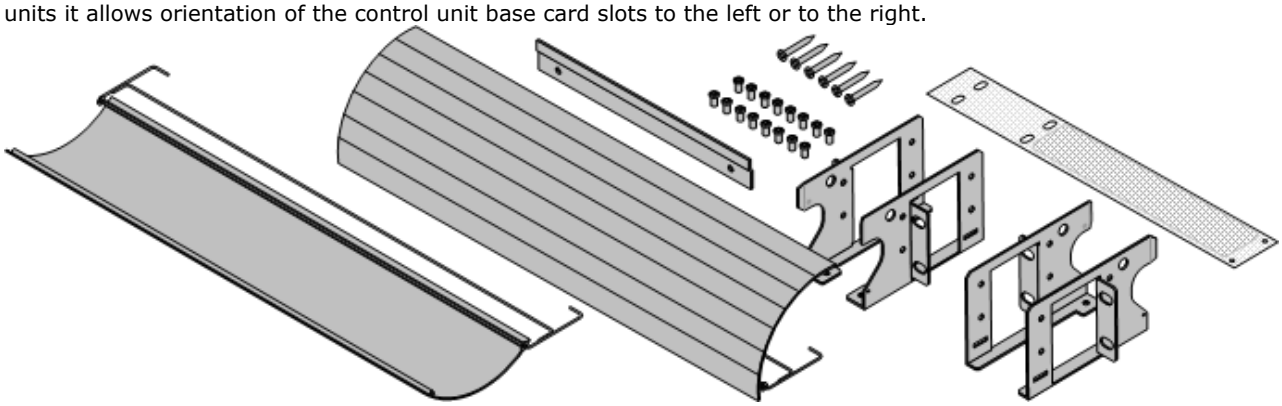

- **IPO IP500 WALL MNTG KIT** *(SAP Code 700430150)*
  This old design of wall mounting kit can be used for wall mounting an IP500 or IP500 V2 control units only. It does not provide any cable routing and requires the control unit to be mounted with the base card slots to the right only.

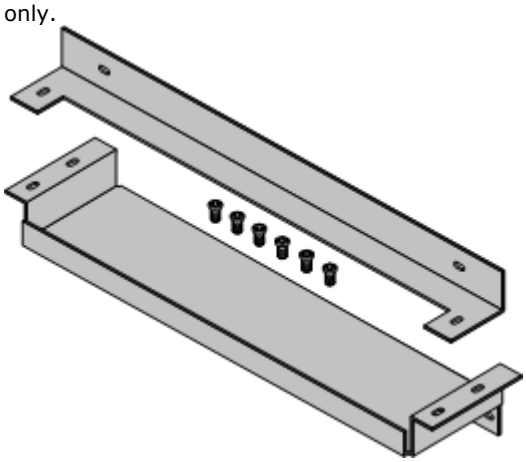

10.6.2 IP500 Rack Mounting Kit

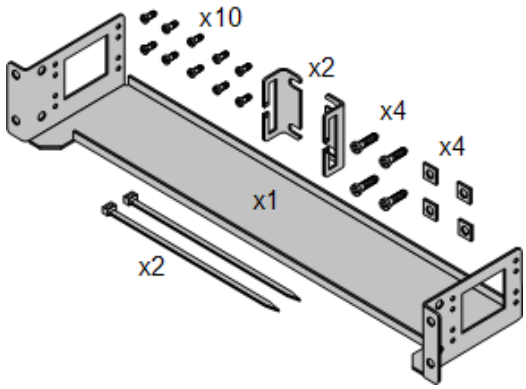

- **IPO IP500 RACK MNTG KIT** *(SAP 700429202)*
  This kit contains all the components required for the rack mounting of a single IP500 V2 control unit, IP500 control unit or IP500 external expansion module. This includes screws for fixing of the brackets to the module, bolts for securing the module in the rack and cable tidy brackets.

10.6.3 IP400 Rack Mounting Kit

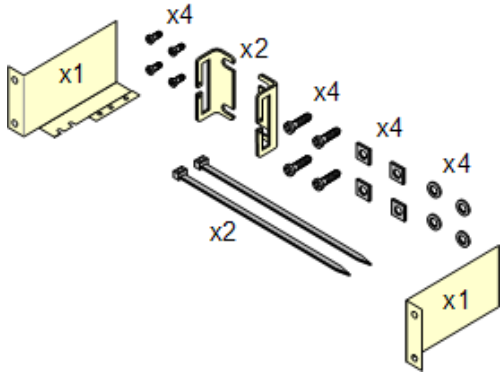

- **IP400 Rack Mounting Kit** *(SAP 700210800)*
  This kit contains all the components required for the rack mounting of a single control unit or expansion module. This includes screws for fixing of the brackets to the module and bolts for securing the module in the rack.

10.6.4 Barrier Box Rack Mounting Kit

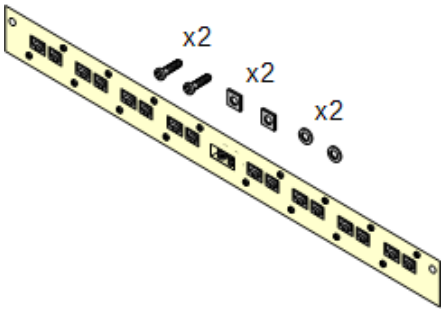

- **Barrier Box Rack Mounting Kit** *(SAP 700293905)*
  Barrier boxes must be used for out-of-building analog phone extensions 31. This bracket allows up to 8 IP Office barrier boxes to be rack mounted and simplifies the number of connections to the protective ground point in the rack. This kit must be used when more than 3 barrier boxes are in use and supports a maximum of 16 barrier boxes for a single external expansion module.

10.7 Phones

IP Office Release 8.1 supports the following phones and phone add-ons. Availability may depend on location and may be subject to local restrictions.

Enhanced Tip and Ring (ETR Port)

These phones are only supported on an ETR6 card in a IP500 V2 systems. They are only supported in IP Office Basic Edition - PARTNER® Mode and IP Office Basic Edition - Quick Mode systems running a North American locale. They are not supported in IP Office Basic Edition - Norstar Mode and IP Office Essential Edition and on any system running A-Law companding.

- **ETR Series:** ETR6 205, ETR6D 205, ETR18 206, ETR18D 206, ETR34D 207 *(ETR 34D phones are limited to a maximum of 2 per card and 4 in total)*
- **PARTNER DECT:** 3910 201, 3920 201

Digital Station (DS Port)

These digital stations connect to the IP Office via DS 235 ports. They are supported by all IP Office modes.

- **1400 Series:** 1403 198, 1408 199, 1416 200
- **9500 Series:** 9504 202, 9508 203

Digital Station (TCM Port)

These digital stations connect to the IP500 V2 IP Office system via TCM ports. The following are supported in IP Office Basic Edition - Quick Mode mode.

- **4100 Series:** 4135, 4136, 4145, 4145EX, 4146, 4146EX - Connection to IP Office TCM ports via a Digital Mobility Solution 221 system.
- **7400 Series:** 7420, 7430, 7434, 7439, 7440, 7444, 7449 - Connection to IP Office TCM ports via a Digital Mobility Solution 221 system.
- **ACU:** Audio Conferencing Unit 204
- **M-Series:** MT7100 208, MT7100N 208, MT7208 209, MT7208N 209, M7310 210, M7310N 210, M7324 211, M7324N 211.
- **T-Series:** T7000 212, T7100 212, T7208 213, T7316 214, T7316E 215, T7406 216, T7406E 216

Analog Telephones

Analog phones and devices connect to PHONE 241 ports with the IP Office system. However due to the variety of analog phones and device available no guarantee of operation is given. It is the responsibility of the IP Office installer and maintainer to test and verify the operation of proposed analog equipment. Analog message waiting indication (MWI) is only supported with Avaya 6200 Series phones.

- **6200 Series:** 6211, 6219, 6221 *(North America)*.
- **B100 Series:** B149, B159.
- **Interquartz Gemini:** 9330-AV, 9335-AV, 9281-AV *(Europe, Middle East, Africa, Asia-Pacific)*.

10.7.1 1403

This phone is supported with IP Office Release 6.0 and higher.

1603	Feature	1403
	Connects via	DS port.
	IP Office Release	6.0
	Programmable Buttons	✓ 3
	Headset Socket	✗
	Handsfree Speaker/ Microphone	✓/✓
	Message Waiting Lamp	✓
	Display	2 x 16 backlit.
	Supported Add-Ons	None
	Upgradeable Firmware	✓

Fixed Telephony Function Keys				
✓ SPEAKER	✗ HEADSET	✓ MUTE	✓ VOLUME UP	✗ CONTACTS
✗ MESSAGE	✓ HOLD	✓ TRANSFER	✓ VOLUME DOWN	✗ CALL LOG
✓ DROP	✓ REDIAL	✓ CONFERENCE	✓ MENU	

Variant		SAP Code
1403 Telephone	Black	700469927

10.7.2 1408

This phone is supported with IP Office Release 6.0 and higher.

1408	Feature	1408
	Connects via	DS port.
	IP Office Release	6.0+
	Programmable Buttons	✓ 8
	Headset Socket	✓
	Handsfree Speaker/Microphone	✓/✓
	Message Waiting Lamp	✓
	Display	3 x 24 backlit.
	Supported Add-Ons	None.
	Upgradeable Firmware	✓

Fixed Function Keys				
✓ SPEAKER	✓ HEADSET	✓ MUTE	✓ VOLUME UP	✓ CONTACTS
✓ MESSAGE	✓ HOLD	✓ TRANSFER	✓ VOLUME DOWN	✓ CALL LOG
✓ DROP	✓ REDIAL	✓ CONFERENCE	✓ MENU	

Variant		SAP Code
1408 Telephone	Black	700469851

10.7.3 1416

This phone is supported with IP Office Release 6.0 and higher.

1416	Feature	1416
	Connects via	DS port.
	IP Office Release	6.0+
	Programmable Buttons	✓ 16
	Headset Socket	✓
	Handsfree Speaker/ Microphone	✓/✓
	Message Waiting Lamp	✓
	Display	4 x 24 Backlit.
	Supported Add-Ons	DBM32 218 x 3.
	Upgradeable Firmware	✓

Fixed Function Keys				
✓ SPEAKER	✓ HEADSET	✓ MUTE	✓ VOLUME UP	✓ CONTACTS
✓ MESSAGE	✓ HOLD	✓ TRANSFER	✓ VOLUME DOWN	✓ CALL LOG
✓ DROP	✓ REDIAL	✓ CONFERENCE	✓ MENU	

Variant		SAP Code
1416 Telephone	Black	700469869
DBM32 Button Module	Black	700469968

10.7.4 3910

This single station DECT phone is supported on an IP500 V2 control unit running in Partner Edition mode. The base station uses an ETR port for connection to the IP Office. This phone is no longer available from Avaya and has been superseded by the 3920 201.

10.7.5 3920

This single station DECT phone is supported on an IP500 V2 control unit running in Partner Edition mode. The base station uses an ETR port for connection to the IP Office.

10.7.6 9504

9500 Series phones are supported by IP Office Release 7.0 and higher.

The phones provide 4 physical buttons with red and green LEDs. These can be used for up to 12 programmable features.

Variant		SAP Code
9504 Telephone	Charcoal Grey	700500206
BM12 Button Module	Charcoal Grey	700480643

10.7.7 9508

9500 Series phones are supported by IP Office Release 7.0 and higher.

The phones provide 8 physical buttons with red and green LEDs. These can be used for up to 24 programmable features. The phones support the addition of up to 3 BM12 button modules supporting an additional 24 programmable features (using 12 buttons) per module.

Variant		SAP Code
9508 Telephone	Charcoal Grey	700500207
BM12 Button Module	Charcoal Grey	700480643

10.7.8 Audio Conferencing Unit

Avaya M and T-Series phones are supported by IP Office Release 7.0 and higher on an IP500 V2. They can be connected to digital station ports provided by an IP500 TCM8 base card or on a DS16A/DS30A external expansion module.

The Audio Conferencing Unit (ACU) is a multiple microphone desktop conferencing unit. The Audio Conferencing unit only supports the following Feature codes:

- **Speeddial: *Feature 0***
  This feature code can be used to dial a stored number.
  - If ***Feature 0*** is followed by a 3-dight number in the range 000 to 255, the system directory entry with the matching index is dialed.
  - If ***Feature 0*** is followed by ***** and a 2-digit number in the range 71 to 94, the personal directory entry with the matching index is dialed.
- **Hold/Switch Calls: *Feature 2***
  This feature code will hold the current call. If there was already a call on hold, the feature code will switch between calls.
- **Conference: *Feature 3***
  If the Audio Conferencing Unit has a call connected and another call on hold, using this feature code will conference the unit and those calls.
- **Last Number Redial: *Feature 5***
  When the phone is idle, this feature code can be used to redial the last number dialed from the Audio Conferencing Unit.

10.7.9 ETR 6, ETR 6D

This phone is supported with IP Office Release 6.0 and higher. It is only supported on an ETR6 card in IP500 V2 systems. They are only supported in IP Office Basic Edition - PARTNER® Mode or IP Office Basic Edition - Quick Mode modes running in a North American locale. They are not supported on systems which have their companding mode set to A-Law.

Both 'Refresh' and 'Euro Style' variants of the phones are supported. An additional analog device using the same extension number can be connected via the ETR phone's AUX socket.

10.7.10 ETR 18, ETR 18D

This phone is supported with IP Office Release 6.0 and higher. It is only supported on an ETR6 card in IP500 V2 systems. They are only supported in IP Office Basic Edition - PARTNER® Mode or IP Office Basic Edition - Quick Mode modes running in a North American locale. They are not supported on systems which have their companding mode set to A-Law.

Both 'Refresh' and 'Euro Style' variants of the phones are supported. An additional analog device using the same extension number can be connected via the ETR phone's AUX socket.

10.7.11 ETR 34D

This phone is supported with IP Office Release 6.0 and higher. It is only supported on an ETR6 card in IP500 V2 systems. They are only supported in IP Office Basic Edition - PARTNER® Mode or IP Office Basic Edition - Quick Mode modes running in a North American locale. They are not supported on systems which have their companding mode set to A-Law.

Both 'Refresh' and 'Euro Style' variants of the phones are supported. An additional analog device using the same extension number can be connected via the ETR phone's AUX socket.

A maximum of 4 ETR 34D phones are supported on a system with a maximum of 2 on any individual ETR6 base card.

10.7.12 M7100

Avaya M and T-Series phones are supported by IP Office Release 7.0 and higher on an IP500 V2. They can be connected to digital station ports provided by an IP500 TCM8 base card or on a DS16A/DS30A external expansion module.

10.7.13 M7100N

Avaya M and T-Series phones are supported by IP Office Release 7.0 and higher on an IP500 V2. They can be connected to digital station ports provided by an IP500 TCM8 base card or on a DS16A/DS30A external expansion module.

10.7.14 M7208

Avaya M and T-Series phones are supported by IP Office Release 7.0 and higher on an IP500 V2. They can be connected to digital station ports provided by an IP500 TCM8 base card or on a DS16A/DS30A external expansion module.

10.7.15 M7208N

Avaya M and T-Series phones are supported by IP Office Release 7.0 and higher on an IP500 V2. They can be connected to digital station ports provided by an IP500 TCM8 base card or on a DS16A/DS30A external expansion module.

10.7.16 M7310

Avaya M and T-Series phones are supported by IP Office Release 7.0 and higher on an IP500 V2. They can be connected to digital station ports provided by an IP500 TCM8 base card or on a DS16A/DS30A external expansion module.

10.7.17 M7310N

Avaya M and T-Series phones are supported by IP Office Release 7.0 and higher on an IP500 V2. They can be connected to digital station ports provided by an IP500 TCM8 base card or on a DS16A/DS30A external expansion module.

10.7.18 M7324

Avaya M and T-Series phones are supported by IP Office Release 7.0 and higher on an IP500 V2. They can be connected to digital station ports provided by an IP500 TCM8 base card or on a DS16A/DS30A external expansion module.

- Additional buttons can be supported on a M7324 phone through the addition of KLM button module 219.

10.7.19 M7324N

Avaya M and T-Series phones are supported by IP Office Release 7.0 and higher on an IP500 V2. They can be connected to digital station ports provided by an IP500 TCM8 base card or on a DS16A/DS30A external expansion module.

10.7.20 T7000

Avaya M and T-Series phones are supported by IP Office Release 7.0 and higher on an IP500 V2. They can be connected to digital station ports provided by an IP500 TCM8 base card or on a DS16A/DS30A external expansion module.

The T7000 telephone is an entry-level digital set for basic low-use office environments. The T7000 is used primarily in the EMEA (not available in North America).

10.7.21 T7100

Avaya M and T-Series phones are supported by IP Office Release 7.0 and higher on an IP500 V2. They can be connected to digital station ports provided by an IP500 TCM8 base card or on a DS16A/DS30A external expansion module.

10.7.22 T7208

Avaya M and T-Series phones are supported by IP Office Release 7.0 and higher on an IP500 V2. They can be connected to digital station ports provided by an IP500 TCM8 base card or on a DS16A/DS30A external expansion module.

10.7.23 T7316

Avaya M and T-Series phones are supported by IP Office Release 7.0 and higher on an IP500 V2. They can be connected to digital station ports provided by an IP500 TCM8 base card or on a DS16A/DS30A external expansion module.

10.7.24 T7316E

Avaya M and T-Series phones are supported by IP Office Release 7.0 and higher on an IP500 V2. They can be connected to digital station ports provided by an IP500 TCM8 base card or on a DS16A/DS30A external expansion module.

- Additional buttons can be supported on a T7316E phone through the addition of T7316E KEM 220 button modules.

10.7.25 T7406, T7406e

Avaya M and T-Series phones are supported by IP Office Release 7.0 and higher on an IP500 V2. They can be connected to digital station ports provided by an IP500 TCM8 base card or on a DS16A/DS30A external expansion module.

These cordless phones use a base station that can support multiple sets. The T7406E base station supports up to 4 T7406E handsets. The T7406 base station supports up to 3 T7406 handsets. Each supported handset requires a connection from the base station to a TCM port on the IP Office system.

Each phone is dedicated to its base station and cannot roam even if multiple base stations are installed.

The T7406E is available in North America, Mexico and Caribbean countries excluding Jamaica and Trinidad. The T7406E replaces the discontinued T7406 cordless telephone.

10.8 Phone Add-Ons

For IP Office Release 5.0 and higher, the maximum combined number of buttons on buttons modules per system is 1024. T3 DSS modules are not included in the combined limits stated above but are limited to 30 T3 DSS modules (1080 buttons).

- **BM12:** *+24 (Max 3 per phone, 32 per system.)*
  Add-on for 9508 203, 9608, 9611 and 9641 phones. Provides 12 buttons assignable in 2 pages for 24 features. When used with a 9508, power must be supplied to the phone using an inline power module such as the 1151C or equivalent.
- **DBM32** 218**:** *+32 (Max 3 per phone, 32 per system.)*
  Add-on for the 1416 phones that provides two columns of 16 buttons. Up to 3 BM32 modules are supported with any 4616. For IP Office 5.0, up to a maximum of 32 BM32 modules total are supported the IP Office system.
- **KLM** 219**:** *+48 (Max 2 per phone, 21 per system.)*
  Used with M7324 211 phones. Up to 2 buttons modules are supported per phone. Each button module provides 48 programmable buttons.
- **T7316E KEM** 220**:** *+24 (Max 9 per phone, 42 per system.)*
  Used with T7316E 215 phones. Each button module provides 24 programmable buttons.

10.8.1 DBM32

The DBM32 add on provides an additional 32 twin-LED programmable buttons for 1416 phones. The units do not require their own power supply connection as they draw power from the phone to which they are connected.

- Up to 3 units can be connected in a chain from a single 1416.
- Up to a maximum of 32 DBM32 units on the system.

Item	SAP Code
DBM32 BUTTON MODULE	700469968
Accessories	
1600 SERIES BM32 CABLE - REPLACEMENT	700415581
1600 SERIES BM32 BOND BRIDGE - REPLACEMENT	700415599
1616/BM32 PLASTIC LABEL COVERS (20) – REPLACEMENT	700415672
1600 SERIES BM32 FLIP STAND - REPLACEMENT	700432800
Paper Labels	
1616/BM32 PAPER DESI LABELS - PACKAGE OF 50 LABELS (8.5" x 11")	700415656
1616/BM32 PAPER DESI LABELS - PACKAGE OF 50 LABELS (A4)	700434236

- ⚠ **Note for Australian installations only:**
  Installations of the 1416 terminal with an 1151 PSU and DBM32 must be restricted to the same building as the host Gateway. That is, the 1416 – if installed with an 1151 PSU and DBM32 – cannot be connected in a campus environment where the 1416 terminal is installed in a building separate from the building housing the Gateway. This application cannot be used with exposed (out-of-building) wiring.
  - For installations in which the 1416 is used without the 1151 PSU and DBM32, campus connections are acceptable: the 1416 can be located in a separate building in these cases.
  - This restriction applies to Australian installations only.

10.8.2 KLM Module

This type of button module can be used with the M7324 phones to provide additional programmable buttons. For IP Office Basic Edition - Quick Mode, only 1 module can be attached to each phone. Each module requires its own power supply unit.

+01	+13	+25	+37
+02	+14	+26	+38
+03	+15	+27	+39
+04	+16	+28	+40
+05	+17	+29	+41
+06	+18	+30	+42
+07	+19	+31	+43
+08	+20	+32	+44
+09	+21	+33	+45
+10	+22	+34	+46
+11	+23	+35	+47
+12	+24	+36	+48

10.8.3 T7316e KEM

This type of button module can be used with the T7316E 215 phones to provide 24 additional programmable buttons. In IP Office Basic Edition - Quick Mode, up to 4 modules can be added, allowing a total of 72 programmable buttons.

+01	+13
+02	+14
+03	+15
+04	+16
+05	+17
+06	+18
+07	+19
+08	+20
+09	+21
+10	+22
+11	+23
+12	+24

10.9 Ancilliary Systems

10.9.1 Digitial Mobility Solution

Avaya 4100 Series and 7400 Series phones are supported using a Digital Mobility Solution (DMS). This is a DECT system that can be used to support up to 64 handsets. The DMS connects to the IP500 system using a TCM port for each handset.

Digital Mobility 2.4 GHz solution - North America and CALA		
7420 Handset		N7B80BK
7430 Handset		N7B80BLE6
7440 Handset		N7B80BQE6
Digital Mobility Base Station 10	2.4GHz, Compatible with Handset 7430/7440, Repeater 40.	N7B65KPE5
Digital Mobility Repeater 40	2.4GHz, Compatible with Handset 7430/7440, Base station 10.	N7B80AGE5
Digital Mobility External Antenna 51	International.	N7B65KWE5
DMC 080 Digital Mobility Controller	North America.	N7B65KJE5
DMC 320 Digital Mobility Controller	North America.	N7B65KKE5
Digital Mobility 1.9 GHz solution - North America		
7439 Handset	Replaces the 7430 model.	N7B80CLE6
7449 Handset	Replaces the 7430 model.	N7B80CNE6
Digital Mobility Base Station 19	North America.	N7B80CRE6
Digital Mobility Repeater 49	Canada, US.	N7B80CUE6
Digital Mobility External Antenna 51	International.	N7B65KWE5
DMC 080 Digital Mobility Controller	North America.	N7B65KJE5
DMC 320 Digital Mobility Controller	North America.	N7B65KKE5
Digital Mobility 1.8 GHz solution - Europe, Hong Kong, Australia, New Zealand		
4135 Handset	Europe & Hong Kong	N7B80BME6
4145 Handset	Europe & Hong Kong	N7B80BRE6
4145EX Handset KIT - EU	Ruggedized version of 4145 - Europe & Hong Kong	N7B80BWE6
4136 Handset	Australia/New Zealand	N7B80CCE6
4146 Handset	Australia/New Zealand	N7B80CEE6
4146EX Handset	Ruggedized version of 4146 - Australia/New Zealand	N7B80CFE6
Digital Mobility Base Station 15		N7B65KTE5
Digital Mobility Repeater 25		N7B65KUE5
Digital Mobility Repeater 45		N7B80AHE5
Digital Mobility External Antenna 51	International	N7B65KWE5
DMC 081 Digital Mobility Controller	International	N7B80AAE5
DMC 321 Digital Mobility Controller	International	N7B80ABE5
Digital Mobility 1.8 GHz solution - South America		
7434 (South America)		N7B80ACE6
7444 (South America)		N7B80ADE6
Digital Mobility Base Station 14		N7B80AEE6
Digital Mobility Repeater 24		N7B80AFE6
Digital Mobility External Antenna 51	International	N7B65KWE5
DMC 081 Digital Mobility Controller	International	N7B80AAE5
DMC 321 Digital Mobility Controller	International	N7B80ABE5

10.10 Applications

This section outlines the requirements for various IP Office applications. These are just outlines, for full details refer to the specific installation manuals for those applications and to the IP Office Technical Bulletins.

- **IP Office Manager** 223
- **<%MONITOR%>** 224
- **<%SSA%> (SSA)** 228

10.10.1 Manager

This tool is used to access all parts of the IP Office configuration. Different levels of access can be defined to control which parts of the configuration the Manager user can view and alter. Manager is also used to upgrade the software files used by an IP Office system. When running is also acts as a TFTP server from which some Avaya phones can request new software.

Note that IP Office Manager's software level is always two higher than the IP Office core software with which it is release. For example IP Office 6.0 core software is release with IP Office Manager 8.0.

IP Office Manager is backwards compatible and can be used to manage IP Office systems running software from IP Office 2.1 upwards.

Details	
DVD	IP Office Release 8.1 User/Admin DVD Set (2) (700503230) (Disk 1)
Languages	English, Brazilian, Chinese (Simplified), Dutch, French, German, Italian, Russian, Spanish (Mexican).
License	✗ No license required.

PC Requirements

Minimum PC Requirements	
RAM	256MB
Hard Disk Free Space	1GB*
Processor:	
- Pentium	PIII 800MHz
- Celeron	Celeron 3 800Mhz
- AMD	Athlon Opteron, Athlon64/XP
Additional Apps:	
- .NET2	Installed with Manager if not already present.

Operating System Support	
Server OS:	
2003 Server	✓
2008 R2 Server	✓
2012 Server	✓
Client OS:	
XP Professional	✓
Vista	✓
Windows 7	✓
Windows 8	✓

- Vista support is only on Business, Enterprise and Ultimate versions.
- Windows 7 support is only on Professional, Enterprise and Ultimate versions.

*Includes disk space required for .NET2 component.

10.10.2 Monitor

Monitor (also known as System Monitor) is a tool that can show all activity on the IP Office system in great detail. As a consequence, interpretation of Monitor traces requires a high-level of data and telephony protocol knowledge. However, all IP Office installers and maintainers must understand how to run Monitor when necessary as Avaya may request copies of Monitor traces to resolve support issues.

For IP Office 4.0 and higher, the System Status Application 228 has been added to provide more easily interpreted information than is provided by Monitor.

- Two versions of Monitor are included in the IP Office Admin applications suite, one for IP Office 4.0 systems and one for pre-4.0 IP Office systems. Care should be taken to ensure that the correct version is used when monitoring an IP Office system.

Details	
DVD	IP Office Release 8.1 User/Admin DVD Set (2) (700503230) (Disk 1)
Languages	English only.
License	✗ No license required.

PC Requirements

Minimum PC Requirements	
RAM	128MB
Hard Disk Free Space	10GB
Processor:	
- Pentium	PIII 800MHz
- Celeron	Celeron 3 800Mhz
- AMD	Athlon B 650MHz

Operating System Support	
Server OS:	
2003 Server	✓
2008 R2 Server	✓
2012 Server	✓
Client OS:	
XP Professional	✓
Vista	✓
Windows 7	✓
Windows 8	✓

- Vista support is only on Business, Enterprise and Ultimate versions.
- Windows 7 support is only on Professional, Enterprise and Ultimate versions.

10.10.3 Flare Communicator for IP Office

Flare Communicator for IP Office is a user softphone application which allows the user to make and answer their calls from a range of telephone devices. Flare Communicator for IP Office client software is available Windows, iPad and Android devices.

Details	
License	✓ See the table below.
Languages	Dutch, English (UK), English (US), French, Italian, Brazilian Portuguese, Russian and Spanish.

Flare Communicator for IP Office is supported on IP Office Essential Edition , IP Office Preferred Edition and IP Office Advanced Edition systems. The features available to the user depend on how the user is licensed for Flare Communicator for IP Office and whether the system also includes one-X Portal for IP Office and Voicemail Pro.

		Flare Communicator for IP Office Mode	
		Lite Mode	**Advanced Mode**
Basic Features		• Make calls, hold calls, mute and transfer calls. • System directory. • Local application call log.	• Make calls, hold calls, mute and transfer calls. • System directory. • Local application call log.
Advanced Features *(Require one-X Portal for IP Office and Voicemail Pro)*		–	• User directories and call logs via one-X Portal for IP Office • Presence (XMPP). • 2-Party Instant Messaging • 2-Party video calls. • Dual extension support.
User Profile		Any user profile.	• **Office Worker** or • **Power User**.
Licenses Required	**System License**	–	• **Essential Edition*** • **Preferred Edition**
	User Licenses	• **Avaya Softphone** license.	• **Office Worker** or • **Power User**.
System Mode	**IP Office Essential Edition**	✓ Yes	–
	IP Office Preferred Edition	✓ Yes	✓ Yes
	IP Office Advanced Edition	✓ Yes	✓ Yes

- **Client Software**
  The source for the Flare Communicator for IP Office client software depends on the user device. However, since Flare Communicator for IP Office is supported on a number of Avaya platforms, in all cases the installer must ensure that they obtains a Flare Communicator for IP Office client that specifically states IP Office support.

Windows PC Requirements

Minimum PC Requirements	
RAM	2GB
Hard Disk Free Space	1.5GB.
Processor	Dual-core 2.4GHz.
Display	1024 x 768
Other	USB Camera

Operating System Support	
Client OS:	
XP Home (32-bit	✓
XP Professional *(32-bit)*	✓
Vista *(32-bit)*	✗
Windows 7	✓
Windows 8	✓

- Vista support is only on Business, Enterprise and Ultimate versions.

- Windows 7 support is only on Professional, Enterprise and Ultimate versions.

User Platform Support	
Mobile Devices	
Windows Mobile	✓
iPad2 *(iOS 4.3.5+)*	✓
Android	✗

- **Server Software**
  There is no specific Flare Communicator for IP Office server. Support for basic mode features is provided directly by the IP Office system. Support for advanced mode features is provided by the one-X Portal for IP Office and Voicemail Pro applications.

10.10.4 IP Office Video SoftPhone

The IP Office Video SoftPhone application is the preferred SIP softphone application for use with IP Office systems. It includes IP Office specific features not available in other non-Avaya SIP softphone applications.

For IP Office Release 8.0+, the IP Office Video SoftPhone is available as a Mac PC application in addition to the existing Windows PC application.

Details	
DVD	IP Office Release 8.1 User/Admin DVD Set (2) (700503230) (Disk 1)
Languages	Brazilian, Chinese (Simplified), English, French, German, Italian, Latin Spanish.
License	✓ User requires to be configured and licensed for either the ***Teleworker*** or ***Power User*** user profile.

Windows User PC Requirements

The following are the minimum and recommended requirements for IP Office Video SoftPhone.

Feature	Windows PC
Processor	• **Minimum:** Pentium 4 2.4 GHz or equivalent. Video Card with DirectX 9.0c support. For HD video, the minimum requirements are Intel Core 2 Duo 2.3 GHz or equivalent, hardware video acceleration, camera and 2GB RAM • **Optimal:** Intel Core 2 Duo or equivalent. Video Card with DirectX 9.0c support.
Memory	• **Minimum:** 1GB RAM. • **Optimal:** 2GB RAM.
Hard Disk Space	• 50MB.
Operating System	• **Microsoft Windows XP Service Pack 3**. • **Microsoft Windows Vista** *(32-bit and 64-bit)*. Vista support is only on Business, Enterprise and Ultimate versions. • **Microsoft Windows 7** *(32-bit and 64-bit)*. Windows 7 support is only on Professional, Enterprise and Ultimate versions. • **Mac OS 10.6 or above** *(Intel Core i5)*.
Sound Card	• Full-duplex, 16-bit or use USB headset.

Additional	• **Windows Installation**
	For installation on Windows PCs, access to the following Windows updates, appropriate to the user's version of Windows operating system, is required if not already installed.
	  • Microsoft .NET Framework 4.
	  • Microsoft Visual C++ 2008 SP1.
	  • Microsoft KB967634 Hotfix.

10.10.5 System Status Application (SSA)

This tool provides a wide range of information about the current status of an IP Office 4.0 or higher system. Its includes available resources and components within the system. This includes details of current call in progress. Details of the number of alarms are recorded and the time date of the most recent alarms.

When required for diagnostics escalation SSA is able to take a snap shot image of the IP Office system's status including a copy of its current configuration. Use of SSA requires an IP Office service user name and password that has been configured for System Status access in the IP Office's security settings.

- For IP500 V2 systems, SSA is pre-installed on the system's Avaya SD memory card and can be run by browsing to the IP Office system's IP address.

Details	
DVD	IP Office Release 8.1 User/Admin DVD Set (2) (700503230) (Disk 1)
License	✗ No license required.

PC Requirements

Minimum PC Requirements	
RAM	256MB
Hard Disk Free Space	1.4GB
Processor:	
- Pentium	PIII 800MHz
- Celeron	Celeron 3 800Mhz
- AMD	Athlon B 650MHz
Additional Apps:	
- Sun Java Virtual Machine	Installed with SSA if not already present.
- Web Browser	• Internet Explorer 7+. • Mozilla Firefox 3.0.

Operating System Support	
Server OS:	
2003 Server	✓
2008 R2 Server	✓
2012 Server	✓
Client OS:	
XP Professional	✓
Vista	✓
Windows 7	✓
Windows 8	✓

- Vista support is only on Business, Enterprise and Ultimate versions.
- Windows 7 support is only on Professional, Enterprise and Ultimate versions.

10.10.6 IP Office Ports

Details of the range of ports used by IP Office and IP Office applications are found at https://support.avaya.com/helpcenter/getGenericDetails?detailId=C201082074362003.

Most PC firewalls requests the user to allow various exceptions when a newly installed application first runs. However this is not always the case, especially if the firewall is located elsewhere than the user's PC.

Adding Firewall Exceptions

The file avayafw.bat can be used to open up the necessary firewall exceptions for IP Office applications. The file can be downloaded from http://marketingtools.avaya.com/knowledgebase/tools/firewall.

It only works for:

- The default Windows XP/Windows 2003 firewall.
- The application must be installed for the exception to be created.
- The application must be installed in the default location.

Whilst avayafw.bat only works subject to the conditions above, for other firewalls study of this file will indicate the necessary application files and ports for which exceptions need to be created.

10.11 Physical Ports

The following port types are found on IP Office systems:

- **ANALOG** 233
  Used for the connection of external analog trunks.
- **AUDIO** 233
  Used for input of an external music on hold source.
- **BRI** 234
  Used for connection of BRI trunks (Quad BRI trunk card).
- **DC I/P** 235
  Power input from external power supply unit.
- **DS** 235
  Connection of Avaya digital station phones supported by IP Office.
- **RS232/DTE** 132
  Used for control unit maintenance under Avaya guidance. On expansion modules not used.
- **EF** 236
  Emergency power failure ports found on the ETR6 base card.
- **ETR** 237
  Only supported on IP500 V2 control unit running in IP Office Basic Edition - PARTNER® Mode or IP Office Basic Edition - Quick Modes.
- **EXPANSION** 238
  Used for interconnection of external expansions modules and control units.
- **EXT O/P** 130
  Used to control external relay systems. The port provides two switchable (on, off and pulse) controls.
- ⏚
  Used for connection of functional or protective ground if required.
- **LAN** 239
  10/100Mbps Ethernet LAN ports.
- **PF** 240
  Analog power fails ports.
- **PHONE** 241 **(POT)** 241
  Analog phone extension ports. On older units these ports are labeled as POT ports.
- **PRI** 243
  PRI trunk ports.
- **TCM** 244
  Connection for M-Series and T-Series phones supported by IP Office. Also for Digital Mobility Solution system supporting 4100 Series and 7400 Series phones.
- **USB**
  Not used.

10.11.1 Cables

The IP Office systems are designed primarily for use within an RJ45 structured cabling system using CAT3 unshielded twisted-pair (UTP) cabling and RJ45 sockets.

A structured cabling system is one where cables are run from a central RJ45 patch panel in the communications/data room to individual RJ45 sockets at user locations. All wires in each cable between the patch panel and the desk socket are connected straight through. This arrangement allows devices connected at the patch panel to be swapped to match the type of device that needs to be connected at the user socket. For example, making one user socket a phone port and another user socket a computer LAN port, without requiring any rewiring of the cables between the patch panel and the user location.

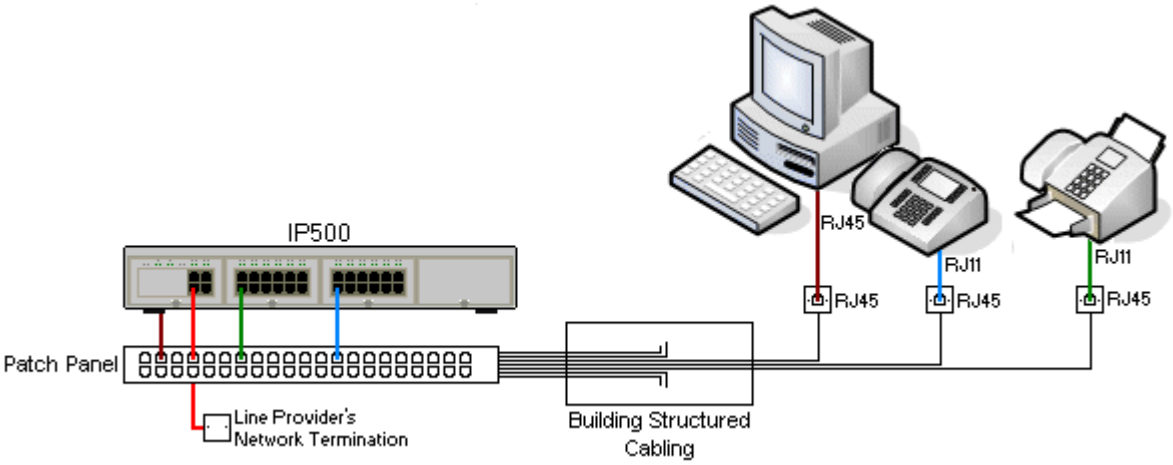

- **Traditional IDC Punchdown Wiring Installations**
  Where necessary, the far end RJ45 plug can be stripped from IP Office cables and wired into traditional wiring systems using punch-block connectors. This type of installation should be performed by an experienced wiring technician.
- **Trunk Connections**
  The majority of IP Office trunk ports use RJ45 connectors for acceptance of an RJ45-to-RJ45 cable. However, connection at the line provider's end may require use of a different plug type in order to match the line providers equipment.
- **RJ11 Phone Connectors**
  Many phones use RJ11 sockets and are supplied with RJ11-to-RJ11 cables. RJ11 plugs can be inserted into RJ45 sockets and in many case the connection will work. However this is not recommended or supported as the connection lock is not truly positive and may become disconnected. An RJ45-to-RJ11 cable 235 is available for these connections.

Standard IP Office Cables

The following are Avaya standard cables available for use with IP Office systems. The maximum length is applicable if the standard Avaya cable is replaced with an alternate cable.

Cable	Description	SAP Code	Standard Length	Maximum Length
9-Way DTE Cable 132	Connects to control unit RS232 DTE port. 9-Way D-type plug to 9-way D-type socket.	–	2m/6'6''.	2m/6'6''.
Structured Cabling DS Line Cable 235	Connects from RJ45 sockets to RJ11 socketed DS and analog phones.	TT700047871	4m/13'2''.	See table below.
BRI/PRI Trunk Cable 234	Connects BRI/PRI trunk ports to the line provider's network termination point. RJ45 to RJ45. Red.	700213440	3m/9'10''.	–
Expansion Interconnect Cable 238	Connects the control unit to expansion modules. RJ45 to RJ45. Blue.	700213457	1m/3'3''.	1m/3'3''.
LAN Cable 239	Connects from IP Office LAN ports to IP devices. RJ45 to RJ45. Grey.	700213481	3m/9'10''.	100m/328'.

The table below details the maximum total cable distances for DS and analog extensions using different cable types.

Telephone	Unshielded Twisted-Pair (UTP) - 50nf/Km			CW1308
	AWG22 (0.65mm)	AWG24 (0.5mm)	AWG26 (0.4mm)	
1400 Series	1200m/3937'.	1000m/3280'.	670m/2200'.	400m/1310'.
9500 Series	1200m/3937'.	1000m/3280'.	670m/2200'.	400m/1310'.
TCM (without power booster)	–	305m/1000'	–	–
" (with power booster)	–	790m/2600'	–	–
Analog Phones	1000m/3280'.	1000m/ 3280'.	400m/1640'.	800m/2620'.

10.11.2 ANALOG Port

These ports are analog trunk ports. The IP400 ATM4 analog trunk cards and IP500 analog trunk cards only support loop-start trunks. The ATM16 Analog Trunk module supports both loop-start and ground-start trunks, switchable within the IP Office configuration.

ANALOG	Pin	Description
	1	Not used.
	2	Not used.
	3	Not used.
	4	Ring.
	5	Tip.
	6	Not used.
	7	Not used.
	8	Not used.

- **Off-Hook Current:** 25mA.
- **IMPORTANT**
  In all IP Office installations, any module being used for analog trunk connections must be connected to a functional earth 30.
- **WARNING**
  Within the Republic of South Africa and in areas of high lightning risk, any module using analog trunk connections must be connected to a protective ground 30 and to surge protection equipment 31.

10.11.3 AUDIO Port

This port is found on the rear of all IP Office control units. It is used for the input of an external music-on-hold sound source. Note that if the IP Office has loaded an internal music-on-hold sound file, any input from this socket is ignored.

The port is a 3.5mm stereo jack socket suitable for use with the most standard audio leads and connection to the 'headphone' output socket of most audio systems.

The use of a 'headphone' socket allows simple volume adjustment. Connection via a 'Line Out' socket may require additional equipment in order to adjust the volume level.

Pin No.	Description
Common	Common
Left	Audio In - Left Channel.
Right	Audio In - Right - Channel.

- Input impedance: 10k /channel. Maximum a.c. signal – 200mV rms.

10.11.4 BRI Port (To)

These ports are BRI To interface ports for connection to external BRI trunk services. Note that BRI ports found on the IP400 So8 module are BRI-S interface ports for connect to ISDN terminal devices, see BRI Port (So).

PRI/BRI Trunk Cable

This cable is used to connect from IP Office BRI/PRI trunk ports to the line providers network termination equipment. If that equipment does not use RJ45 sockets, the cable may need to be stripped and rewired or an alternate cable used. The appropriate signal pin-outs and wire colours are detailed below.

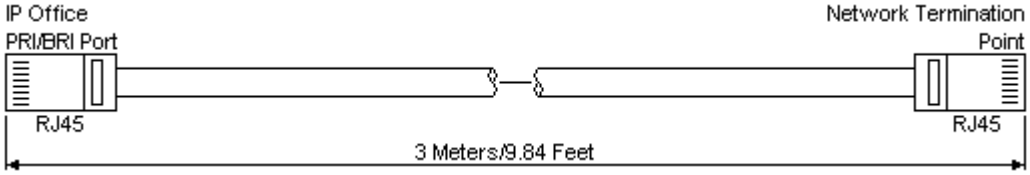

IP Office				Wire	Network Termination	
BRI	RJ45	BRI	PRI		PIN	RJ45
RJ45 8 1	1	–	⬅ Rx-A	White/Orange	1	RJ45 8 1
	2	–	⬅ Rx-B	Orange/White	2	
	3	➡ Tx-A	–	White/Green	3	
	4	⬅ Rx-A	➡ Tx-A	Blue/White	4	
	5	⬅ Rx-B	➡ Tx-B	White/Blue	5	
	6	➡ Tx-B	–	Green/White	6	
	7	–	–	White/Brown	7	
	8	–	–	Brown/White	8	

- Supply: BRI/PRI trunks cards are not supplied with these cables.
- Cable Color: Red.
- SAP Code: 700213440.
- Standard Length: 3m/9'10".
- Maximum Length: 5m/16'5''.
- Though not used pins 7 and 8 are through connected for ease of construction.

10.11.5 DC I/P Port

Found on all IP Office control units and expansion modules. Used for connection from the external power supply unit 25 supplied with the control unit or module.

- No other type of power supply unit should be used with the module or module unless specifically indicated by Avaya.
- Power cords must not be attached to the building surface or run through walls, ceilings, floors and similar openings.

10.11.6 DS Ports (RJ45)

These ports are used for connection from an RJ45 structured cabling system to digital station phones supported by the IP Office. DS ports are provided by IP500 Digital Station Cards 171, IP500 ATM Combination Cards 167, IP500 BRI Combination Cards 170 and IP500 Digital Station 183 external expansion modules.

Though the RJ11 to RJ11 cables supplied with some phones can be plugged directly into RJ45 ports including those on IP Office modules, this is not recommend as the connection lock is not positive and may become disconnected.

DS ports on Digital Station V1/V2 expansion modules can be connected to out-of-building extensions 31. If this is the case, connection must be made via suitable protective devices at each end and via each building primary protection. In addition the Digital Station module must be connected to a protective ground.

DS ports on IP Office control units must not be connected to out-of-building extensions.

Structured Cabling Line Cord

This is an RJ45 to RJ11 cable suitable for connection from a structured cabling system RJ45 port to a DS phone. It can also be used for two-wire analog phone extensions.

This cable is not suitable for connection from an Avaya 1151D1/B2 power supply unit to a DS phone with a 4450, EU24 or XM24 add-on module. In those cases the cables supplied with the power supply unit and the add-on module should be used.

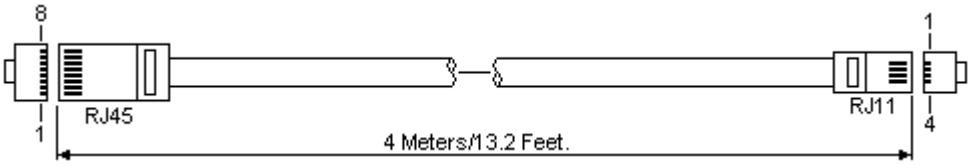

IP Office			Phone	
DS Port	Pin	Description	Pin	Port
RJ45 (8 1)	1	Not used.	–	RJ11 (6 1)
	2	Not used.	1	
	3	Not used.	2	
	4	Signal 1.	3	
	5	Signal 2.	4	
	6	Not used.	5	
	7	Not used.	6	
	8	Not used.	–	

- SAP Code: T700047871.

10.11.7 EF Port

These ports are found on the ETR6 base card. They are analog trunk ports that are only useable when the card is fitted with an IP500 analog trunk daughter card. When in power fail, the EF ports are connected to trunk port 12.

10.11.8 RS232 DTE Port

These ports are found on the rear of all IP Office control units and external expansion modules. The DTE ports on external expansion modules are not used.

The RS232 DTE ports on the control units can be used for system maintenance and connection of serial terminal adaptors. On IP400 control units the port can also be used for connection of the IP Office serial port licence key dongle.

An asynchronous terminal program such as HyperTerminal is also required. Configure this for operation via a PC serial port, as follows:

Bits per second	38,400	**Parity**	None	**Flow Control**	None
Data bits	8	**Stop Bits**	1	**Settings | Emulation**	TTY

DTE Cables

These cables are used for system maintenance and diagnostics under Avaya guidance. They can also be used for connection of RS232 serial terminal adaptor equipment to the IP Office control unit. The cable required depends on the IP Office control unit. This cable is a "Straight through DB9 female to DB9 male serial cable".

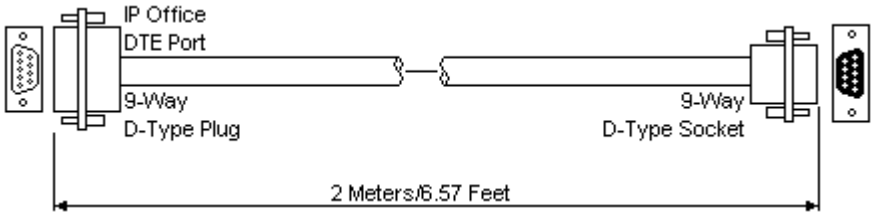

IP Office 9-Way RS232 DTE Port	Signal	PC/Terminal Adaptor
3	⬅Receive data	3
2	➡Transmit Data	2
7	⬅RTS (Request To Send)	7
8	➡CTS (Clear To Send)	8
6	➡DSR (Data Set Ready)	6
5	●Ground	5
1	➡DCD (Data Carrier Detect)	1
4	⬅DTR (Data Terminal Ready)	4
9	➡RI (Ring Indicator)	9

10.11.9 ETR Port

ETR (Enhanced Tip and Ring) ports are provided by the ETR6 base card. They can be used for the connection of DTMF analog phone devices and Avaya ETR phones.

- Paging to external paging equipment is not supported via ETR6 ports. It is supported via POT ports.

10.11.10 EXPANSION Port

This type of port is found on the rear of IP Office control units and external expansion modules. It is used for connecting the external expansion modules to there parent IP Office control unit.

The connection between these ports should only be done using an Avaya Expansion Interconnect Cable. No other cable type should be used.

- Each external expansion module is supplied with a blue 1 meter (3'3'') expansion interconnect cable. This cable must be used when connecting to expansion ports on the rear of a control unit.

Expansion Interconnect Cable
The Expansion Interconnect cable is used to link expansion ports between the IP Office control unit and external expansion modules.

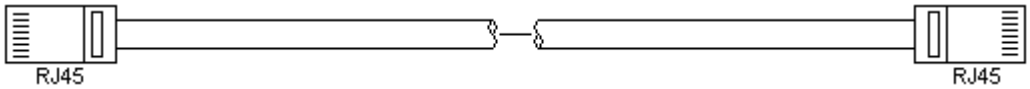

- Supply: One cable is normally supplied with each external expansion module.
- SAP Code: 1m (3'3") Blue cable - 700213457, 2m (6'6") Yellow cable - 700472871.

10.11.11 EXT O/P Port

These ports are found on the rear of all IP Office control units. They are used for connection to external switching relays. The port uses a standard 3.5mm stereo jack plug for connection.

The IP Office is able to open (high resistance), close (low resistance) or pulse (close for 5 seconds and then open) two switches within the port. Either switch can be operated separately. These switches are intended for activation of external relays in systems such as door opening systems.

- **CAUTION:** In installations where this port is connected to a device external to the building, connection must be via a towerMAX SCL/8 Surge Protector and a protective ground connection must be provided on the IP Office control unit.

EXT O/P	Pin	Description
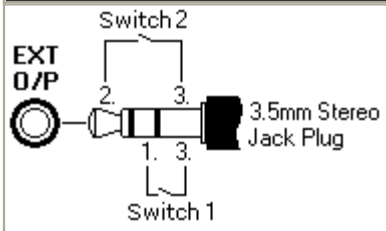	1	Switch 1.
	2	Switch 2.
	3	0 Volts (Ground/Chassis)

- Switching Capacity: 0.7A.
- Maximum Voltage: 55V d.c.
- On state resistance: 0.7 ohms.
- Short circuit current: 1A.
- Reverse circuit current capacity: 1.4A.
- Ensure that pins 1 and 2 are always at a positive voltage with respect to pin 3.

3.5mm stereo audio jack plugs are frequently sold as pre-wired sealed modules. It may be necessary to use a multi-meter to determine the wiring connections from an available plug. Typically 3 (common to both relays) is the cable screen.

10.11.12 LAN Port

These ports are found on IP Office control units. They are used for connection to IP LANs and IP devices.

All IP Office LAN ports are 10/100Mbps auto-sensing. Operation varies as follows:

- **IP Office 500** / **IP500 V2**
  The WAN port is not supported on systems running in IP Office Basic Edition - Quick Mode mode.

The LEDs are used as follows:

- Green: On = connected, Flashing = Activity.
- Yellow: On = 100Mbps, Off = 10Mbps.

LAN Cables
These are CAT5 UTP cables for connection of various IP devices within the IP Office system.

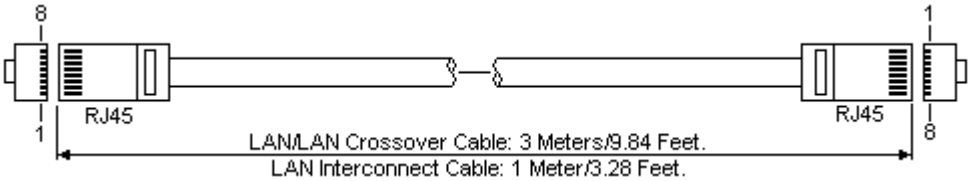

IP Office							
LAN	**Pin**	**MDIX (Normal)**	**MDI (Crossover)**	**Wire**	**Standard/ Interconnect**	**Crossover**	
RJ45 8 1	1	⬅Rx-A.	➡Tx-A.	White/Orange	1	3	RJ45 8 1
	2	⬅Rx-B.	➡Tx-B.	Orange/White	2	6	
	3	➡Tx-A.	⬅Rx-A.	White/Green	3	1	
	4	Not used.	Not used.	Blue/White	4	4	
	5	Not used.	Not used.	White/Blue	5	5	
	6	➡Tx-B.	⬅Rx-B.	Green/White	6	2	
	7	Not used.	Not used.	White/Brown	7	7	
	8	Not used.	Not used.	Brown/White	8	8	

- **SAP Code:**
  - **LAN Cable - GREY: 700213481.**
    Standard straight LAN cable.
  - **LAN Crossover Cable - Black: 700213473.**
    LAN crossover cable.

10.11.13 PF Port

These ports are found on the rear of the IP400 Analog Trunk expansion module. They are analog extension ports that can be used in conjunction with analog loop-start trunks during power failure to the IP Office system.

Any phones connected to these ports should be clearly labeled as power fail extensions in accordance with the appropriate national and local regulatory requirements.

PF	Pin	Description
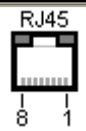	1	Not used.
	2	Pin 2 is internally connected to pin 5 via a ringer capacitor.
	3	Not used.
	4	Ring.
	5	Tip.
	6	Pin 6 is internally connected to pin 5 via a ringer capacitor.
	7	Not used.
	8	Not used.

- Minimum Wire Size: AWG 26.
- Maximum Cable Length:
  - AWG26: 500m / 1640'.
  - AWG24, AWG22: 1000m / 3280'.

10.11.14 PHONE (POT) Port

These ports are analog extension ports. On older IP Office units these ports were labeled as POT ports rather than PHONE ports.

PHONE ports on Phone V1/V2 expansion modules can be connected to out-of-building extensions 31. If this is the case, connection must be made via suitable protective devices (IP Office Barrier Box) at each end and via each building primary protection. In addition the Phone module must be connected to a protective ground.

PHONE ports on IP Office control units must not be connected to out-of-building extensions.

PHONE	Pin	Description
RJ45 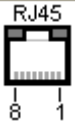	1	Not used.
	2	Not used.
	3	Not used.
	4	Ring.
	5	Tip.
	6	Not used.
	7	Not used.
	8	Not used.

- REN: 2
- Off-Hook Current: 25mA.
- Ring Voltage:
  - IP500 Control Unit and IP400 Phone Modules: 40V rms
  - IP500 V2 Control Unit, IP500 Phone Modules and IP400 Phone V2 Modules: 49V rms.
- Minimum Wire Size: AWG 26.
- Maximum Cable Length:
  - AWG26: 0.5km / 1640 feet.
  - AWG24, AWG22: 1km / 3280 feet.

Except on some older equipment, these ports do not include a ringing capacitor. Therefore for connection to 4-wire analog phones where this is a requirement (typically the United Kingdom and New Zealand), connection should be via a Master socket containing ringing capacitors. On some older IP403 control units and IP400 Phone V1 modules, pins 2 and 6 are internally connected via ringing capacitors.

Structured Cabling Line Cord

This is an RJ45 to RJ11 cable suitable for connection from a structured cabling system RJ45 port to a DS phone. It can also be used for two-wire analog phone extensions.

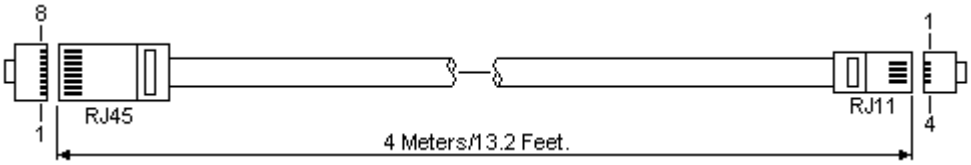

IP Office			Phone	
DS Port	Pin	Description	Pin	Port
RJ45	1	Not used.	–	RJ11
	2	Not used.	1	
	3	Not used.	2	
	4	Signal 1.	3	
	5	Signal 2.	4	
	6	Not used.	5	
	7	Not used.	6	

	8	Not used.	–	

- SAP Code: T700047871.

10.11.15 PRI Port

These ports are used for connection to PRI trunk services including E1, T1 and E1-R2.

PRI Trunk Cable

This cable is used to connect from IP Office PRI trunk ports to the line providers network termination equipment. If that equipment does not use RJ45 sockets, the cable may need to be stripped and rewired or an alternate cable used. The appropriate signal pin-outs and wire colours are detailed below.

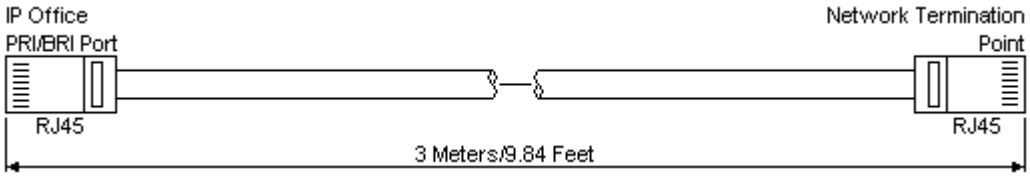

IP Office			Wire	Network Termination	
RJ45		PRI		PIN	RJ45
RJ45 8 1	1	⬅Rx-A	White/Orange	1	RJ45 8 1
	2	⬅Rx-B	Orange/White	2	
	3	–	White/Green	3	
	4	➡Tx-A	Blue/White	4	
	5	➡Tx-B	White/Blue	5	
	6	–	Green/White	6	
	7	–	White/Brown	7	
	8	–	Brown/White	8	

- Supply: PRI trunks cards are not supplied with these cables.
- Cable Color: Red.
- SAP Code: 700213440.
- Standard Length: 3m/9'10".

10.11.16 TCM Port (RJ21)

These ports are found on IP500 Digital Station 16A/30A 185 external expansion modules. These are supported by IP500 V2 systems running IP Office Release 7.0 and higher. They are used for supported M-Series and T-Series digital stations. They are also used for 4100 and 7400 Series phone support by connection to a Digital Mobility Solution 221 system.

Cable lengths up to 305 m (1000 ft) using 0.5mm (24AWG) wires do not require a power booster. For TCM phones, lengths up to 790 m (2600 ft) are supported if an auxiliary power supply booster is used.

1st RJ21 Connector

Port		Pin	Wire
1	Tip	26	White/Blue
	Ring	1	Blue/White
2	Tip	27	White/Orange
	Ring	2	Orange/White
3	Tip	28	White/Green
	Ring	3	Green/White
4	Tip	29	White/Brown
	Ring	4	Brown/White
5	Tip	30	White/Slate
	Ring	5	Slate/White
6	Tip	31	Red/Blue
	Ring	6	Blue/Red
7	Tip	32	Red/Orange
	Ring	7	Orange/Red
8	Tip	33	Red/Green
	Ring	8	Green/Red
9	Tip	34	Red/Brown
	Ring	9	Brown/Red
10	Tip	35	Red/Slate
	Ring	10	Slate/Red
11	Tip	36	Black/Blue
	Ring	11	Blue/Black
12	Tip	37	Black/Orange
	Ring	12	Orange/Black
13	Tip	38	Black/Green
	Ring	13	Green/Black
14	Tip	39	Black/Brown
	Ring	14	Brown/Black
15	Tip	40	Black/Slate
	Ring	15	Slate/Black
16	Tip	41	Yellow/Blue
	Ring	16	Blue/Yellow
Not Used		42	Yellow/Orange
		17	Orange/Yellow
		43	Violet/Slate
		08	Slate/Violet

2nd RJ21 Connector

Port		Pin	Wire
1	Tip	26	White/Blue
	Ring	1	Blue/White
2	Tip	27	White/Orange
	Ring	2	Orange/White
3	Tip	28	White/Green
	Ring	3	Green/White
4	Tip	29	White/Brown
	Ring	4	Brown/White
5	Tip	30	White/Slate
	Ring	5	Slate/White
6	Tip	31	Red/Blue
	Ring	6	Blue/Red
7	Tip	32	Red/Orange
	Ring	7	Orange/Red
8	Tip	33	Red/Green
	Ring	8	Green/Red
9	Tip	34	Red/Brown
	Ring	9	Brown/Red
10	Tip	35	Red/Slate
	Ring	10	Slate/Red
11	Tip	36	Black/Blue
	Ring	11	Blue/Black
12	Tip	37	Black/Orange
	Ring	12	Orange/Black
13	Tip	38	Black/Green
	Ring	13	Green/Black
14	Tip	39	Black/Brown
	Ring	14	Brown/Black
Not Used		40	Black/Slate
		15	Slate/Black
		41	Yellow/Blue
		16	Blue/Yellow
		42	Yellow/Orange
		17	Orange/Yellow
		43	Violet/Slate
		08	Slate/Violet

10.12 Licences

Various IP Office features and applications require entry of licenses 245 into the system's configuration. The licenses are unique 32-character codes based on the feature being activated and the serial number of the feature key dongle 192 installed with the IP Office system.

The serial number is printed on the feature key dongle and prefixed with **FK**. It can also be viewed in the system configuration using IP Office Manager.

- For IP500 V2 systems, the feature key dongle takes the form of an SD card inserted into the control unit. The card is a mandatory item for these systems even if they use no licensed features.

When a license is entered into the IP Office configuration, the following information is shown.

- **Status**
  The status, which is ***Unknown*** until the configuration file is sent back to the IP Office system.
  - ***Unknown***
    This status is shown for licenses that have just been added to the configuration shown in IP Office Manager. Once the configuration has been sent back to the IP Office and then reloaded, the status will change to one of those below.
  - ***Valid***
    The features licensed can be configured and used.
  - ***Invalid***
    The license was not recognized. It did not match the serial number of the Feature Key.
  - ***Dormant***
    The license is valid but is conditional on some other pre-requisite that is not currently meet.
  - ***Obsolete***
    The license is valid but is one no longer used by the level of software running on the system.
  - ***Expired***
    The license has gone past its expiry date.
- **License**
  The name of the licensed feature. This may differ from the ordered RFA name.
- **Instances**
  Depending on the license, this may be the number of ports enabled or number of simultaneous users of the licensed feature. Sometime the number of instances is specified in the license name.
- **Expires**
  Most purchased licenses have no expiry setting. For some features, trial licenses may be available which will have an expiry date.

10.12.1 System Edition Licenses

Essential Edition Additional Voicemail Ports : *IPO LIC R6 ESSNTL EDDITION ADD 2 - 229423.*
For IP500 V2 only. Unlicensed, the Embedded Voicemail provided by the system supports 2 simultaneous connections and 15 hours of storage. This can be expanded up to 6 channels by the addition of licenses, each of which enables an additional two channels. For IP Office Release 7.0+ each license also enables an additional 5 hours of storage.

10.12.2 Upgrade Licenses

Existing IP Office systems being upgraded to IP Office Release 6.0 or higher may require a software upgrade license.

- **New IP500 V2 Systems**
  The behavior of new IP500 V2 systems depends on the level of software installed when the first call is made as follow:
  - **Pre-IP Office Release 8.0(46) or IP Office Release 8.1(52)**
    For 90 days from its first call, a new IP500 V2 control unit can run any IP Office Release supported on a IP500 V2 system without requiring an upgrade license. The highest level run is written into the control unit's memory (not the SD card) and becomes a permanent entitlement for that control unit. After 90 days, the IP500 V2 may require an upgrade license if upgraded to a software release higher than any it has run during the initial 90 day period.
  - **IP Office Release 8.0(46), IP Office Release 8.1(52) and higher**
    Systems installed with firmware 8.0(46) or 8.1(52) have no entitlement period after their first call. For those systems, even if in their first 90 day period, any subsequent upgrade to a higher major or minor release will require a software upgrade licence to be added to the system.
- **! Warning**
  Systems upgraded without the appropriate license will display *"No license available"* and will not allow any telephony functions.
- **Software Upgrade**
  Existing IP Office systems being upgraded to IP Office Release 6.0 or higher require an upgrade license. This applies to all IP Office system modes, for example IP Office IP Office Essential Edition, IP Office Basic Edition - Quick Mode, IP Office Basic Edition - Norstar Mode or IP Office Basic Edition - PARTNER® Mode.
  - IP Office Basic Edition - Quick Mode, IP Office Basic Edition - Norstar Mode and IP Office Basic Edition - PARTNER® Mode systems are automatically configured with either 48 or 100 users and so cannot use a **Small System Upgrade License**.
  - Pre-IP Office Release 8.0 IP500 V2 systems being upgraded to IP Office Release 8.0 or higher also require a **Essential Edition** 246 system license in order to operate. A virtual Essential Edition license is automatically added to the system configuration in response to the addition of a valid upgrade license.
- **Small System Upgrade License:** *IPO LIC UPG R8.1 SML - 270680.*
  This license can be used to upgrade systems with up to 32 users and no external expansion modules.
- **Large System Upgrade License:** *IPO LIC UPG R8.1 LARGE - 270399.*
  This license can be used to upgrade system with more than 32 users or with external expansion modules.

10.12.3 Trunk Licensing

The following trunks licenses can be used by a IP Office Basic Edition - Quick Mode system.

- **IP500 Universal PRI (Additional channels)**
  These licenses are used to enable additional B-channels above the basic 8 on an IP500 PRI-U card. The IP500 PRI-U card supports E1, T1 and E1-R2 PRI modes. The IP Office system supports 8 unlicensed B-channels on each IP500 PRI-U port fitted. Additional B-channels, up to the capacity of ports installed and PRI mode selected require licenses. These additional channels consume the licenses based on which additional channels are configured as in-service from port 9 of slot 1 upwards. D-channels are not affected by licensing.
  - *IP500 T1 CHANNELS ADD 2CH - 215180.*
  - *IP500 T1 CHANNELS ADD 8CH - 215181.*
  - *IP500 T1 CHANNELS ADD 32CH - 215182.*
  - *IP500 E1 CHANNELS ADD 2CH - 215183.*
  - *IP500 E1 CHANNELS ADD 8CH - 215184.*
  - *IP500 E1 CHANNELS ADD 22CH - 215185.*
  - *IP500 E1R2 CHANNELS ADD 2CH - 215186.*
  - *IP500 E1R2 CHANNELS ADD 8CH - 215187.*
  - *IP500 E1R2 CHANNELS ADD 22CH - 215188.*
- **SIP Trunk Channels**
  These licenses are used to configure the maximum number of simultaneous SIP trunk calls supported. A IP Office Basic Edition - Quick Mode mode system supports 3 channels without licenses.
  - *IPO LIC SIP TRNK RFA 1 - 202967.*
  - *IPO LIC SIP TRNK RFA 5 - 202968.*
  - *IPO LIC SIP TRNK RFA 10 - 202969.*
  - *IPO LIC SIP TRNK RFA 20 - 202970.*

10.13 Hardware PCS Levels

Each item of IP Office hardware has a Product Change Status (PCS) level. This is usually included on the label on the hardware.

The PCS level is increased each time a change is made to a component of that piece of hardware. For example the PCS level will be increased when a component is replaced by one from a different supplier.

Normally changes to a PCS level are not important and items of the same hardware but with different PCS levels are still identical in operation and can be interchanged. However, there are some exceptions as listed below.

- **IP500 Analog Trunk Card V1**
  These cards are support by IP Office Release 4.0 and higher. However, PCS10 and higher cards are only supported in systems running IP Office Release 6.1(20), 7.0(12) or 8.0 and higher. Refer to IP Office Technical Tip 237.
- **IP500 ATM4 Combination Card V1**
  These cards are supported by IP Office Release 6.0 and higher. However, PCS04 and higher cards are only supported in systems running IP Office Release 6.1(20), 7.0(12) or 8.0 and higher. Refer to IP Office Technical Tip 237.
- **IP406 V2 Control Unit**
  For this type of control unit to run IP Office Release 4.0 or higher software up to IP Office Release 6.1, the control unit must be PCS 8 or higher.
- **IP400 DS30 and 4424D Telephone Support**
  A maximum of sixteen 4424D telephones are supported on an IP400 DS30 V2 unless PCS05 or higher. PCS05 and higher units can support up to twenty-seven 4424D telephones.

10.14 TAA

Those items labeled as TAA are compliant with the requirements of the Trade Agreements Act which is a pre-requisite for federal purchases in the United States of America. Unless otherwise stated, the TAA variants of equipment are physically and functionally the same as the non-TAA variants.

		SAP Code
Control Unit	**IPO IP500 V2 CNTRL UNIT TAA** 161	700501510
Base Cards	**IPO IP500 EXTN CARD DGTL STA 8 TAA** 171	700501512
	IPO IP500 V2 COMB CARD ATM TAA 167	700501513
	IPO IP500 VCM 32 TAA	700501518
Trunk Daughter Cards	**IPO IP500 TRNK BRI 4 UNI TAA** 178	700501515
	IPO IP500 TRNK PRI UNVRSL SNGL TAA 179	700501514
	IPO IP500 TRNK PRI UNVRSL DUAL TAA 179	700501517
External Expansion Modules	**IPO IP500 EXP MOD ANLG TRNK 16 TAA** 181	700501511
	IPO IP500 EXP MOD DGTL STA 16 TAA 183	700501516

Chapter 11.
Safety Statements

11. Safety Statements

The Avaya IP400 Office and IP500 Office modules are intended to be installed by 'Service Personnel' and it is the responsibility of the Service Personnel to ensure that all subsidiary interconnected equipment is wired correctly and also meet the safety requirements of IEC60950 or UL60950 where applicable.

- CE
  The CE mark affixed to this equipment means that the module complies with the 1999/5/EC (R&TTE), 89/336/EEC (EMC) and 72/23EEC (LVD) Directives.
- The Declarations of Conformity (DoC) for the IP400 and IP500 products are available on the IP Office Application DVD.
- ⚠ This warning symbol is found on the base of IP500 modules.
- Refer to Trunk Interface Modules 253 for information concerning which Trunk Interface module variants are fitted in which country.

In Finland, Norway and Sweden a protective earthing conductor must be attached to the protective earth point on the rear of the IP500 and IP500 V2 Servers. See Grounding 74 for more information. In addition the Server must be located in a restricted access location where equipotential bonding has been applied, for example, in a telecommunication centre.

11.1 Lithium Batteries

A lithium battery is fitted to the real time clock on IP Office IP400 control unit motherboards and the IP500 control unit motherboard. .

⚠ WARNING
The Lithium battery must only be replaced by Avaya personnel or authorized representatives. There is a danger of explosion if the battery is incorrectly replaced. Replace only with the same or equivalent type recommended by the manufacturer. Dispose of used batteries according to the manufacturer's instructions.

11.2 Lightning Protection/Hazard Symbols

Lightning protectors
The buildings lightning protectors must be verified as follow:

1. Check the lightning protectors, at the trunk cable entry point to the building housing the Avaya IP Office, paying special attention to the lightning protection grounding. Report any problems, in writing, to the telephone company.
2. Equipment that is designed to be connected using internal wiring is typically not lightning protected. Hence, Avaya IP Office extension cabling must not leave the building. For installations where telephones and/or other standard (tip/ring) devices are installed in another building then lightning protection is required (see Out of Building Telephone Installations 31).

Hazard Symbol
The shock hazard symbol is intended to alert personnel to electrical hazard or equipment damage. The following precautions must also be observed when installing telephone equipment:

1. Never install telephone wiring during a lightning storm.
2. Never install telephone jacks in wet locations unless the jack is specifically designed for wet locations.
3. Never touch uninsulated telephone wires or terminals unless the telephone line has been disconnected at the network interface.
4. Always use caution when working with telephone lines.

11.3 Trunk Interface Modules

To ensure the validation of the approvals, only the following types of trunk interface cards must be fitted in the following IP Office control units.

USA/Canada						
Product	Quad BRI	PRI E1		PRI T1		Analog Trunk Card
		Single	Dual	Single	Dual	
IP500 V2	✗	✗	✗	✓	✓	✓
IP500	✗	✗	✗	✓	✓	✓

Rest of World						
Product	Quad BRI	PRI E1/E1R2		PRI T1		Analog Trunk Card
		Single	Dual	Single	Dual	
IP500 V2	✓	✓	✓	✗	✗	✓
IP500	✓	✓	✓	✗	✗	✓

Notes

- E1R2 trunks are only supported in CALA and Korea.

11.4 Further Information and Product Updates

Further information, including Product and Reference Manual updates, can be obtained from Avaya Dealers and Distributors or from Avaya's web site: http://www.avaya.com.

This guide is also available from the Avaya's support web site: http://support.avaya.com.

Support Telephone Numbers
For initial help and support, contact your distributor/supplier. The following contact points are for Avaya authorized partners.

- In the USA only
  Avaya provides a toll-tree Customer Helpline 24 hours a day:
  - Name: Avaya Technical Support Organization (TSO)
  - Customer Helpline: 1 800 628-2888
  - Address: 8744 Lucent Blvd., Highlands Ranch, Colorado, 80129 USA
  - URL: http://support.avaya.com
    If you need assistance when installing, programming, or using your system, call the Helpline or your Avaya representative. Consultation charges may apply.

- Outside the USA
  If you need assistance when installing, programming, or using your system, contact your Avaya representative.
  - URL: http://support.avaya.com

11.5 Port Safety Classification

The Avaya IP Office systems have the following ports which are classified as follows:

Port Name	Port Description	Port Classification
PRI port	PRI ISDN connection (NET)	TNV (Operating within the limits of SELV)
BRI ports	BRI ISDN connection (NET)	TNV (Operating within the limits of SELV)
Analog ports	Two wire analog trunk	TNV3
Power fail ports	Two wire analog trunk	TNV3
DTE port	Async Data connection.	SELV
Analog Telephone Ports	Telephone Extension ports	TNV2
Digital Telephone Ports	Telephone Extension ports	SELV
LAN ports	10/100 BaseT attachment to LAN.	SELV
Expansion ports	Expansion Module connector.	SELV
Audio port	Connector for Music on Hold.	SELV
External Control port	Connector for Controlling Ancillary circuits.	SELV
DC Input port	Connector for DC input power.	SELV

Interconnection circuits shall be selected to provide continued conformance with the requirements of EN 609050:1992/A3:1995 clause 2.3 for SELV circuits and with the requirements of clause 6 for TNV circuits, after connections between equipment.

11.6 EMC Directive

889/336/ EEC (EMC Directive) CISPR 22:1993 including A1 + A2, AS/NZ 3548:1995 (ROW)

- ⚠ **WARNING**
  This is a class A product. In a domestic environment this product may cause radio interference in which case the user may be required to take adequate measures.

Federal Communications Commission (FCC)

This equipment has been tested and found to comply with the limits for a Class A digital device, pursuant to Part 15 of the FCC Rules. These limits are designed to provide reasonable protection against harmful interference when the equipment is operated in a commercial environment. This equipment generates, uses, and can radiate radio frequency energy and, if not installed and used in accordance with the instruction manual, may cause harmful interference to radio communications. Operation of this equipment in a residential area is likely to cause harmful interference, in which case the user will be required to correct the interference at his or her own expense.

Canadian Department of Communications (DOC)

"NOTICE: This equipment meets the applicable Industry Canada Terminal Equipment Technical Specifications. This is confirmed by the registration number. The abbreviation, IC, before the registration number signifies that registration was performed based on a Declaration of Conformity indicating that Industry Canada technical specifications were met. It does not imply that Industry Canada approved the equipment."

EMC Caution for China

警示

注意：此为A级产品，在生活环境中，该产品可能会造成无线电干扰。在这种情况下，可能需要用户对其干扰采取切实可行的措施。仅适用于商业或工业环境。

11.7 Regulatory Instructions for Use

11.7.1 Australia

Connection
Connection of IP400 Office products must be via a Line Isolation Module with a telecommunications compliance label.

BRI Interface
During the configuration, ensure "000" emergency number is not barred, by performing the following:

- Short Code: 000
- Telephone No: 000;
- Function: DialEmergency

Connections to TS013, the following Bearer Capabilities shall not be used:

- 7kHz Audio, Video, Restricted Digital Information.

If unknown type of number is used in calling party number, the network will use the default CLI.

The system must be configured for Point to Multi point connection to comply with Austel requirements for connecting to TS013 circuits.

As the IP Office does not support emergency dialing after loss of power, the following warning notice should be recognized:

- **WARNING**
  This equipment will be inoperable when mains power fails.

PRI Interface
During the configuration, ensure "000" emergency number is not barred, by performing the following:

- Short Code: 000
- Telephone No: 000;
- Function: DialEmergency

- **WARNING**
  This equipment will be inoperable during mains power failure.

11.7.2 Canada

This equipment meets the applicable Industry Canada Terminal Equipment Technical Specifications. This is confirmed by the registration number. The abbreviation, IC, before the registration number signifies that registration was performed based on a Declaration of Conformity indicating that Industry Canada technical specifications were met.

It does not imply that Industry Canada approved the equipment.

''NOTICE: The Ringer Equivalence Number (REN) for this terminal equipment is 1. The REN assigned to each terminal equipment provides an indication of the maximum number of terminals allowed to be connected to a telephone interface. The termination on an interface may consist of any combination of devices subject only to the requirement that the sum of the Ringer Equivalence Numbers of all the devices does not exceed five.''

11.7.3 China

AVAYA

700433220
February 2007
Copyright© 2007, Avaya Inc. All Rights Reserved

所有在中华人民共和国境内进口或销售的电子信息产品必须附上本文件

Include this document with all Electronic Information Products imported or sold in the People's Republic of China

部件名称 (Part Name)	有毒有害物质或元素 (Hazardous Substance)					
	铅 (Pb)	汞 (Hg)	镉 (Cd)	六价铬 (Cr^{6+})	多溴联苯 (PBB)	多溴二苯醚 (PBDE)
金属部件 (Metal Parts)	×	○	○	○	○	○
电路模块 (Circuit Modules)	×	○	○	○	○	○
电缆及电缆组件 (Cables & Cable Assemblies)	×	○	○	○	○	○
塑料和聚合物部件 (Plastic and Polymeric parts)	○	○	○	○	○	○
电路开关/断路器 (Circuit Switch/Breakers)	○	○	○	○	○	○
电源组件 (Power Assemblies)	×	○	○	○	○	○
显示器 (LCD, Monitor)	○	○	○	○	○	○
玻璃 (Glass)	○	○	○	○	○	○

○： 表示该有毒有害物质在该部件所有均质材料中的含量均在 SJ/T 11363 2006 标准规定的限量要求以下。
Indicates that the concentration of the hazardous substance in all homogeneous materials in the parts is below the relevant threshold of the SJ/T 11363 2006 standard.

×： 表示该有毒有害物质至少在该部件的某一均质材料中的含量超出 SJ/T 11363 2006 标准规定的限量要求。
Indicates that the concentration of the hazardous substance of at least one of all homogeneous materials in the parts is above the relevant threshold of the SJ/T 11363 2006 standard.

本表显示，所附的亚美亚电子信息产品中，从生产日期起，可能包含这些物质。注意：所附产品可能包含或不含以上所列的某些组件。
This table shows where these substances may be found in Avaya's electronic information products, as of the date of manufacture of the enclosed product. Note that some of the component types listed above may or may not be a part of the enclosed product.

除非有另外特别的标注,此标志将作为所附产品及零部件的环保使用期标志. 某些产品会有一个不同的环保使用期(例如,电话机)并贴在其产品上.此环保使用期限只适用于产品在产品手册中所规定的条件下使用

The Environmentally Friendly Use Period (EFUP) for all enclosed products and their parts are per the symbol shown here, unless otherwise marked. Certain products have a different EFUP (for example, telephones) and so are marked to reflect such. The Environmentally Friendly Use Period is valid only when the product is operated under the conditions defined in the product manual.

11.7.4 European Union

1. 999 and 112 calls must not be barred. Doing so will invalidate the approval.
2. All connections at the MDF shall be identifiable by suitable labeling.
3. The CE mark displayed on IP Office equipment indicates the systems compliance with the EMC, LVD, and R&TTE Directives and common technical regulations for Primary Rate and Basic Rate ISDN.
4. All ports for the connection of other non-telecommunications apparatus have a Safety Extra Low Voltage (SELV) safety status.

11.7.5 New Zealand

The grant of a Telepermit for any item of terminal equipment indicates only that Telecom has accepted that the item complies with minimum conditions for connection to its network. It indicates no endorsement of the product by Telecom, nor does it provide any sort of warranty. Above all, it provides no assurance that any item will work correctly in all respects with another item of Telepermitted equipment of a different make or model, nor does it imply that any product is compatible with all of Telecom's network services.

11.7.6 FCC Notification

This equipment complies with Part 68 of the FCC rules and the requirements adopted by the Administrative Council on Terminal Attachments (ACTA). On the rear of this equipment is a label that contains, among other information, a product identifier in the format US:AAAEQ##TXXX. If requested, this number must be provided to the telephone company.

The REN is used to determine the quantity of devices that may be connected to the telephone line. Excessive RENs on the telephone line may result in devices not ringing in response to an incoming call. In most, but not all areas, the sum of RENs should not exceed 5.0. To be certain of the number of devices that may be connected to a line, as determined by the total RENs, contact the local telephone company. For products approved after July 23, 2001, the REN for this product is part of the product identifier that has the format US:AAAEQ##TXXX. The digits represented by ## are the REN without a decimal point (for example, 03 is a REN of 0.3). For earlier products, the REN is separately shown on the label.

Means of Connection

Connection of this equipment to the telephone network is shown in the following table.

Port	FIC	SOC	USOC Jack	REN
IP500 PRI 1U, IP500 PRI2U, IP400 PRI-T1	04DU9.BN, 04DU9.DN, 04DU9.IKN, 04DU9.ISN	6.0Y	RJ48C	NA
IP500 ATM4U IP400 ATM4U	OL13A, OL13B, OL13C, 02AC2, 02LA2, 02LB2, 02LC2, 02LR2, 02LS2	9.0Y	RJ45S	0.1B
IP500 ATM16	OL13A, OL13B, OL13C, 02AC2, 02GS2, 02LA2, 02LB2, 02LC2, 02LR2, 02LF2 02GS2, 02LS2	9.0Y	RJ45S	0.1B

If this equipment causes harm to the telephone network, the telephone company will notify you in advance that temporary discontinuance of service may be required. But if advance notice is not practical, the telephone company will notify the customer as soon as possible. Also, you will be advised of your right to file a complaint with the FCC if you believe it is necessary.

The telephone company may make changes in its facilities, equipment, operations or procedures that could affect the operation of the equipment. If this happens, the telephone company will provide advance notice in order for you to make necessary modifications to maintain uninterrupted service.

If trouble is experienced with this equipment, for repair or warranty information, please contact the Technical Service Center at 1-800-242- 2121 or contact your local Avaya representative. If the equipment is causing harm to the telephone network, the telephone company may request that you disconnect the equipment until the problem is resolved.

A plug and jack used to connect this equipment to the premises wiring and telephone network must comply with the applicable FCC Part 68 rules and requirements adopted by the ACTA.

Connection to party line service is subject to state tariffs. Contact the state public utility commission, public service commission or corporation commission for information.

Equipment With Direct Inward Dialing ("DID"):

Allowing this equipment to be operated in such a manner as to not provide proper answer supervision is a violation of Part 68 of the FCC's rules.

Proper Answer Supervision is when:

A. This equipment returns answer supervision to the public switched telephone network (PSTN) when DID calls are:
   - answered by the called station,
   - answered by the attendant,
   - routed to a recorded announcement that can be administered by the customer premises equipment (CPE) user.
   - Routed to a dial prompt

B. This equipment returns answer supervision signals on all (DID) calls forwarded back to the PSTN. Permissible exceptions are:
   - A call is unanswered.
   - A busy tone is received.
   - A reorder tone is received.

Avaya attests that this registered equipment is capable of providing users access to interstate providers of operator services through the use of access codes. Modification of this equipment by call aggregators to block access dialing codes is a violation of the Telephone Operator Consumers Act of 1990.

Automatic Dialers:

When programming emergency numbers and (or) making test calls to emergency numbers:

1. Remain on the line and briefly explain to the dispatcher the reason for the call.
2. Perform such activities in the off-peak hours, such as early morning or late evenings.

Toll Restriction and Least Cost Routing Equipment:

The software contained in this equipment to allow user access to the network must be upgraded to recognize newly established network area codes and exchange codes as they are placed into service.

Failure to upgrade the premises systems or peripheral equipment to recognize the new codes as they are established will restrict the customer and the customer's employees from gaining access to the network and to these codes.

FCC Part 68 Supplier's Declarations of Conformity

Avaya Inc. in the United States of America hereby certifies that the equipment described in this document and bearing a TIA TSB-168 label identification number complies with the FCC's Rules and Regulations 47 CFR Part 68, and the Administrative Council on Terminal Attachments (ACTA) adopted technical criteria.

Avaya further asserts that Avaya handset-equipped terminal equipment described in this document complies with Paragraph 68.316 of the FCC Rules and Regulations defining Hearing Aid Compatibility and is deemed compatible with hearing aids.

11.7.7 Compliance with FCC Rules

Transmit and Receive Gain Settings for PRI/T1 and Analog Ports

The Gain settings are password controlled for use by qualified installation personnel only and must not be made available to the end user. The default gain settings of 0dB ensures compliance with FCC part 68 section 68.308(b)(5) and TIA/EIA-IS-968 Section 4.5.2.5. "Through transmission amplification from ports for the connection of separately registered equipment or from other network connection ports". Gain setting adjustment by unqualified personnel may result in violation of the FCC rules. Qualified personnel may adjust gain settings above these levels only where:

1. Measurement is made to ensure that the power levels sent to line at each network interface connected does not exceed the maximum levels specified in FCC part 68 section 68.308(b) and TIA/EIA-IS-968 Section 4.5 for that specific interface type.
2. Where gain adjustment away from the default values are made, precautions should be taken to ensure that the connection of terminal equipment is controlled by qualified installation personnel.
3. To conform with the Receive Objective Loudness Rating at distances greater than 2.7km from the central office, on analog trunks a receive gain of 1.5dB must be set.

Chapter 12.
Document History

12. Document History

Date	Issue	Change Summary
29th July 2015	27s	• Clarification of DS16B/DS30B from IP Office Release 8.1 Service Pack 9. [81164]

Index

A

Analog
- Phone Barrier Boxes 128
- Phone Region Availability 35, 196
- Port 230, 233

Application
- Manager 223
- Monitor 224
- System Status Application 228

Audio
- Port 230

Audio Port 233

Availability of Equipment 11

B

Backup
- SD Card 148

Barrier Boxes
- Analog Phone 128
- Rack Mounting 129

Base Card
- Analog Phone 20, 164
- Digital Station 20, 164
- Legacy Card Carrier 20, 164
- VCM 20, 164

Batteries
- Lithium 252

BRI
- (Trunk) Port 234
- Port 230

Buttons
- Call appearance 101
- Intercom 101
- Line appearance 101
- Programmable 101

C

Cable
- Access Requirements 43
- Clearance Requirements 43

Cables
- Maximum Cable Distances 28, 231
- Standard IP Office 28, 231

Cabling
- Lightening Protection 31, 126

Call appearance buttons 101

Calls
- External 101
- Internal 101

Cards
- IP500 Analog Phone Base 166
- IP500 Digital Station Base 171

Configuration
- Erase 133

Connections
- Grounding 30
- Out of Building 31, 126

Control Unit
- Rack Mounting 32
- Wall Mounting 32

Copy
- SD Card 150

Country
- Languages 38
- Supported Locales 38

D

Daughter Cards
- Analog Trunk 22, 176
- BRI Trunk 22, 178
- PRI Trunk 179
- PRI-U Trunk 22
- Trunk 22

DC I/P
- Port 230

DCI I/P Port 235

DECT
- Phone 35, 196
- Region Availability 35, 196

DS
- IROB 127
- Phone 35, 127, 196
- Port 230, 235
- Region Availablility 35, 196

DTE Port 132
- Cable requirement 132, 236
- RS232 132, 236
- Settings 132, 236

E

EMC Cautions
- Canadian Department of Communications 255
- EMC Caution for China 255
- Federal Communications Commission 255

Envirmental Requirements 42

Equipment Availability 11

Expansion
- Port 230

Expansion Modules
- IP400 Analog Trunk 23
- IP400 Digital Station 23
- IP400 Phone 23
- IP400 So8 23
- IP400 WAN3 23
- IP500 Analog Trunk 16 181
- IP500 Digital Station 23, 183
- IP500 Phone 23, 190
- IPO 500 Analog Trunk 23
- IPO 500 BRI So8 23

Expansion Port 238

EXT O/P
- Port 230

EXT O/P Port 130, 238

External calls 101

External Expansion Modules 23

F

Faulty Units 11

FCC Rules 261

Feature Keys
- Parallel 34
- Serial 34
- Smart Card 34
- USB 34

Firewall Exceptiong 229

G

General Information
- Training Courses 39
- Web Sites 39

Grounding Control Units 30

H

H323

H323
Phones 35, 196
Region Availability 35, 196
Hazard Symbols 252
Hazardous Substances 11
Homologation Statement 252
I
Intercom buttons 101
Internal calls 101
IP Office Operation in
Australia 256
Canada 256
China 257
European Union 258
New Zealand 258
USA 259
IP500
Analog Phone Base Card 20, 164
Analog Trunk Daughter Card 22
BRI Trunk Daughter Card 22
Digital Station Base Card 20, 164
Legacy Card Carrier Base Card 20, 164
PRI-U Trunk Daughter Card 22
Reset Button 131
Trunk Daughter Card 22
VCM Base Card 20, 164
IP500 Installation
Admin Applications 53
Card 64
Check Card LED 77
Connect Manager 55
Documentation 62
Grounding 74
Rack Mounting 70
Start Manager 56
Tools 61
Unpacking 63
K
Key Mode 101
L
LAN
Port 230
LAN Port 239
Licences
Manager 223
Monitor 224
Syatem Status Application 228
Licenses
PC-Base 34
PC-Less 34
Lightening Portection 252
Lightening Protection 31, 126
Line appearance buttons 101
Lithium Batteries 252
M
Manager
Components 223
License Requirements 223
PC Requirements 223
Upgrade Software 122
Memory card
Removal 118, 140, 156
Mode
Key 101
PBX 101
Modules
Trunk Interface 253
Monitor
Components 224
License Requirements 224
PC Requirements 224
Protocols 229
O
Out of Building
Connections 31, 126
P
Parallel Feature Key 34
PBX Mode 101
PC-Base Licensing 34
PC-Less Licensing 34
PF
Port 230
PF Port 240
Phone (POT)
Port 230
Phone (POT) Port 241
Port
Analog 230, 233
Assigned 229
Audio 230, 233
BRI 230
BRI (Trunk) 234
DC I/P 230
DCI I/P 235
Door 130
DS 230, 235
Expansion 230, 238
EXT O/P 130, 230, 238
IP Office 229
LAN 230, 239
PF 230, 240
Phone (POT) 230, 241
PRI 230, 243
RS232/DTE 230
RS323 DTE 132, 236
Safety Classification 254
USB 230
Used 229
WAN 230
Power Supplies
1151C1 25
1151C2 25
Cords 26
Type 40w PSU 25
Type 45W Earthed PSU 25
Type 60W Earthed PSU 25
Uninterrupted Power Supply 27
PRI
Port 230
PRI Port 243
Programmable buttons 101
Protocols 229
R
Rack Mounting Control Units 32
Region Availability
Analog Phone 35, 196
DECT Phone 35, 196
DS Phone 35, 196
H323 Phone 35, 196
Remove

Remove
SD Card 118, 140, 156
Requirements
Cable Access 43
Cable Clearance 43
Enviromental 42
Space 43
Wall Mounting 42
Restore
SD Card 149
RoHS 11
RS232/DTE
Port 230

S

Safety Statement 252
SD Card
Backup 148
Copy 150
Removal 118, 140, 156
Restore 149
Security Settings
Default 135
Serial Feature Key 34
Smart card Feature Key 34
Software
Erase Core Software 136
Space Requirements 43
Statement
Homologation 252
Safety 252
Supported
Language 38
Locales 38
System Status Application
Components 228
License Requirements 228
PC Requirements 228

T

Training Courses 39
Trunk Interface Modules 253

U

USB
Feature Key 34
Port 230

W

Wall Mounting Control Units 32
Wall Mounting Requirements 42
WAN
Port 230
Web Sites 39

Performance figures and data quoted in this document are typical, and must be specifically confirmed in writing by Avaya before they become applicable to any particular order or contract. The company reserves the right to make alterations or amendments to the detailed specifications at its discretion. The publication of information in this document does not imply freedom from patent or other protective rights of Avaya or others.

All trademarks identified by the ® or ™ are registered trademarks or trademarks, respectively, of Avaya Inc. All other trademarks are the property of their respective owners.

This document contains proprietary information of Avaya and is not to be disclosed or used except in accordance with applicable agreements.

© 2015 Avaya Inc. All rights reserved.