Avaya CallPilot® Planning and Engineering Guide

5.1
NN44200-200
02.01
October 2012

© 2012 Avaya Inc.

All Rights Reserved.

Notice

While reasonable efforts have been made to ensure that the information in this document is complete and accurate at the time of printing, Avaya assumes no liability for any errors. Avaya reserves the right to make changes and corrections to the information in this document without the obligation to notify any person or organization of such changes.

Documentation disclaimer

"Documentation" means information published by Avaya in varying mediums which may include product information, operating instructions and performance specifications that Avaya generally makes available to users of its products. Documentation does not include marketing materials. Avaya shall not be responsible for any modifications, additions, or deletions to the original published version of documentation unless such modifications, additions, or deletions were performed by Avaya. End User agrees to indemnify and hold harmless Avaya, Avaya's agents, servants and employees against all claims, lawsuits, demands and judgments arising out of, or in connection with, subsequent modifications, additions or deletions to this documentation, to the extent made by End User.

Link disclaimer

Avaya is not responsible for the contents or reliability of any linked Web sites referenced within this site or documentation provided by Avaya. Avaya is not responsible for the accuracy of any information, statement or content provided on these sites and does not necessarily endorse the products, services, or information described or offered within them. Avaya does not guarantee that these links will work all the time and has no control over the availability of the linked pages.

Warranty

Avaya provides a limited warranty on its Hardware and Software ("Product(s)"). Refer to your sales agreement to establish the terms of the limited warranty. In addition, Avaya's standard warranty language, as well as information regarding support for this Product while under warranty is available to Avaya customers and other parties through the Avaya Support Web site: http://support.avaya.com. Please note that if you acquired the Product(s) from an authorized Avaya reseller outside of the United States and Canada, the warranty is provided to you by said Avaya reseller and not by Avaya.

Licenses

THE SOFTWARE LICENSE TERMS AVAILABLE ON THE AVAYA WEBSITE, HTTP://SUPPORT.AVAYA.COM/LICENSEINFO/ ARE APPLICABLE TO ANYONE WHO DOWNLOADS, USES AND/OR INSTALLS AVAYA SOFTWARE, PURCHASED FROM AVAYA INC., ANY AVAYA AFFILIATE, OR AN AUTHORIZED AVAYA RESELLER (AS APPLICABLE) UNDER A COMMERCIAL AGREEMENT WITH AVAYA OR AN AUTHORIZED AVAYA RESELLER. UNLESS OTHERWISE AGREED TO BY AVAYA IN WRITING, AVAYA DOES NOT EXTEND THIS LICENSE IF THE SOFTWARE WAS OBTAINED FROM ANYONE OTHER THAN AVAYA, AN AVAYA AFFILIATE OR AN AVAYA AUTHORIZED RESELLER; AVAYA RESERVES THE RIGHT TO TAKE LEGAL ACTION AGAINST YOU AND ANYONE ELSE USING OR SELLING THE SOFTWARE WITHOUT A LICENSE. BY INSTALLING, DOWNLOADING OR USING THE SOFTWARE, OR AUTHORIZING OTHERS TO DO SO, YOU, ON BEHALF OF YOURSELF AND THE ENTITY FOR WHOM YOU ARE INSTALLING, DOWNLOADING OR USING THE SOFTWARE (HEREINAFTER REFERRED TO INTERCHANGEABLY AS "YOU" AND "END USER"), AGREE TO THESE TERMS AND CONDITIONS AND CREATE A BINDING CONTRACT BETWEEN YOU AND AVAYA INC. OR THE APPLICABLE AVAYA AFFILIATE ("AVAYA").

Copyright

Except where expressly stated otherwise, no use should be made of materials on this site, the Documentation, Software, or Hardware provided by Avaya. All content on this site, the documentation and the Product provided by Avaya including the selection, arrangement and design of the content is owned either by Avaya or its licensors and is protected by copyright and other intellectual property laws including the sui generis rights relating to the protection of databases. You may not modify, copy, reproduce, republish, upload, post, transmit or distribute in any way any content, in whole or in part, including any code and software unless expressly authorized by Avaya. Unauthorized reproduction, transmission, dissemination, storage, and or use without the express written consent of Avaya can be a criminal, as well as a civil offense under the applicable law.

Third-party components

Certain software programs or portions thereof included in the Product may contain software distributed under third party agreements ("Third Party Components"), which may contain terms that expand or limit rights to use certain portions of the Product ("Third Party Terms"). Information regarding distributed Linux OS source code (for those Products that have distributed the Linux OS source code), and identifying the copyright holders of the Third Party Components and the Third Party Terms that apply to them is available on the Avaya Support Web site: http://support.avaya.com/Copyright.

Trademarks

The trademarks, logos and service marks ("Marks") displayed in this site, the Documentation and Product(s) provided by Avaya are the registered or unregistered Marks of Avaya, its affiliates, or other third parties. Users are not permitted to use such Marks without prior written consent from Avaya or such third party which may own the Mark. Nothing contained in this site, the Documentation and Product(s) should be construed as granting, by implication, estoppel, or otherwise, any license or right in and to the Marks without the express written permission of Avaya or the applicable third party.

Avaya is a registered trademark of Avaya Inc.

All non-Avaya trademarks are the property of their respective owners, and "Linux" is a registered trademark of Linus Torvalds.

Downloading Documentation

For the most current versions of Documentation, see the Avaya Support Web site: http://support.avaya.com.

Contact Avaya Support

See the Avaya Support Web site: http://support.avaya.com for product notices and articles, or to report a problem with your Avaya product. For a list of support telephone numbers and contact addresses, go to the Avaya Support Web site: http://support.avaya.com, scroll to the bottom of the page, and select Contact Avaya Support.

Contents

Chapter 1: Customer service ... 9
- Getting technical documentation ... 9
- Getting product training ... 9
- Getting help from a distributor or reseller ... 9
- Getting technical support from the Avaya Web site ... 10

Chapter 2: Getting started ... 11
- In this chapter ... 11
- Scope and purpose ... 11
- Issues to consider ... 11
- Reference documents ... 12
- Components of a CallPilot system ... 15
- Servers and switches ... 15
- Desktop PCs and wireless devices ... 15
- System configuration and ordering ... 16

Chapter 3: Grounding and power requirements ... 17
- In this chapter ... 17
- Overview ... 17
- Power and grounding guidelines ... 18
- General ... 18
- Power ... 18
- Single-point ground ... 19
- Auxiliary power ... 21
- Terminal devices ... 21
- Auxiliary equipment ... 21
- Existing power and grounding ... 21

Chapter 4: System configurations ... 23
- In this chapter ... 23
- CallPilot® architecture ... 23
- Compatibility of switches and servers ... 26
- Web server for CallPilot administration ... 27
- Desktop messaging clients ... 27
- Section A: Hardware and software configurations ... 27
- In this section ... 27
- CallPilot server ... 28
- Hardware ... 28
- Software ... 28
- Compatibility with other products and environments ... 29
- Meridian Mail ... 29
- Multi-tenant Meridian 1 switch ... 29
- Internet Telephony Gateway ... 29
- Antivirus software ... 30
- Third-party software ... 30
- Avaya Contact Center Server ... 30
- Voice services ... 31

CallPilot Application Builder..... 32
Supported switches..... 32
Meridian 1..... 32
Avaya Communication Server 1000..... 33
T1/SMDI switches..... 33
Web server for CallPilot..... 34
Introduction..... 34
Configurations of CallPilot Web services..... 34
External Web server configuration..... 35
Hardware..... 35
Software..... 35
Free disk space..... 36
Other Web server considerations..... 36
Monitoring performance..... 36
CallPilot desktop messaging..... 37
Voice messages..... 37
Fax pages..... 38
Desktop messaging clients..... 38
Section B: Connectivity requirements..... 38
In this section..... 38
Avaya server subnet connections..... 39
Introduction..... 39
Hardware requirements..... 39
Data transmission rates..... 39
Network protocols..... 40
Avaya server subnet traffic considerations..... 40
Data transfer rates..... 40
ELAN subnet connections..... 41
Introduction..... 41
ELAN subnet description..... 42
ELAN subnet power requirements..... 42
System administration and the ELAN subnet..... 43
Desktop client PCs and the ELAN subnet..... 43
ELAN subnet hardware requirements..... 43
Hardware requirements for Option 11C..... 44
Hardware requirements for Options 51C, 61C, and 81C..... 44
Cabling between the Meridian 1 switch and the ELAN Ethernet switch (layer 2) or hub..... 44
ELAN subnet connectivity requirements on the switch..... 45
Meridian 1 connectivity..... 45
Introduction..... 45
IPE (202i) platform connectivity..... 46
Tower and rack-mount connectivity..... 46
MPB16 board..... 46
MPB96 board-DS30X..... 46
MPB96-board CAT5..... 46
MGate-DS30X card..... 47
MGate-CAT5 card..... 47

Number of MGate cards and MPB96 boards supported by server type.... 48
Meridian 1 IPE resource requirements.... 48
Meridian 1 software requirements.... 48
Meridian 1 memory and real-time engineering.... 49
CallPilot usage of Meridian 1 software resources.... 50
ACD DN overflow.... 50
CS 1000 connectivity.... 51
Introduction.... 51
IPE (202i) platform connectivity.... 51
Tower and rack-mount server connectivity.... 51
MPB16 board.... 51
MPB96 board-DS30X.... 52
MPB96-board CAT5.... 52
MGate-DS30X card.... 52
MGate-CAT5 card.... 53
Number of MGate cards and MPB96 boards supported by server type.... 53
CS 1000 software.... 53
Real-time engineering.... 54
CallPilot usage of CS 1000 software resources.... 54
T1/SMDI connectivity.... 55
Introduction.... 55
MPB96 board.... 55
Intel Dialogic D/480JCT-2T1 board.... 55
SL-100 and DMS-100 connectivity.... 56
SMDI link.... 56
Line side T1 cards.... 56
Channel bank for DMS-100.... 57
Software requirements.... 57
Programming considerations.... 57
Section C: System requirements.... 58
In this section.... 58
Compatibility.... 58
Products and environments.... 58
Application Builder clients and operating systems.... 59
Desktop Messaging clients: operating systems.... 60
Customer e-mail clients.... 60
My CallPilot Web messaging.... 60
Operating system and Internet browser support with My CallPilot, CallPilot Manager, and CallPilot Reporter.... 62
Software feature key adapter.... 63
Migration from Meridian Mail.... 63
Chapter 5: Determining system size.... 65
In this chapter.... 65
Overview.... 65
Introduction.... 65
System sizing.... 66
Sales engineering tools.... 66
Avaya Enterprise Configurator.... 66

CallPilot Capacity Engineering Spreadsheet..... 66
System requirements..... 67
Channel requirements..... 67
DSP MPU requirements..... 67
Storage requirements..... 68
CPU real-time requirements..... 68
CallPilot platform capacity..... 68
Switch channel connectivity hardware..... 68
DSP hardware..... 69
Customer requirements..... 69
Principal input..... 69
Voice Users maximums..... 72
Channel requirements..... 72
Channel types..... 72
Busy hour..... 73
Usage assumptions..... 73
Basic user..... 73
Mobile user..... 74
Fax user..... 74
Desktop user..... 74
Sizing the number and type of channels..... 74
Default assumptions in the system sizing tools..... 75
Daily calls and faxes..... 77
Voice traffic services..... 77
Principal services..... 77
Provisioning voice channels on CallPilot..... 78
Modeling busy hour voice traffic..... 78
Fax traffic services..... 81
Principal services..... 81
Estimating fax channels..... 81
Modeling busy hour fax traffic..... 81
Speech recognition traffic services..... 83
Principal services..... 83
Modeling busy hour speech recognition traffic..... 83
Storage estimation..... 84
Storage calculation assumptions..... 84
Chapter 6: Engineering the server..... 85
In this chapter..... 85
Avaya CallPilot® server capacities..... 85
CallPilot product capacities..... 86
Overview..... 86
202i server features..... 88
600r server features..... 89
1005r server features..... 89
1006r server features..... 90
1002rp (T1/SMDI) server features..... 91
Remote access service connectivity..... 91

Chapter 7: Selecting a site 93
In this chapter 93
Space requirements for the AvayaCallPilot® server 93
General requirements 93
Space requirements 94
Switch room space planning 94
Ethernet switch or hub, and cables 94
Peripheral devices 94
202i server 95
600r server 95
1005r server 96
1006r Server 96
1002rp server 97
CallPilot power supply requirements 97
Introduction 97
Single-point grounding 98
UPS recommendation 98
Power requirements 98
Environmental specifications 99
General 99
202i server 100
600r server 100
1005r server 101
1006r server 101
1002rp server 102
Traffic capacity tables 103
In this chapter 103
Types of traffic capacity tables 103
Introduction 103
Types of tables to use 103
CCS values and channel requirements table 104
Introduction 104
Before using the table 104
Regulatory information 109
In this chapter 109
Grounding 109
General compliance and safety information for specific countries 110
Information for European countries 110
Safety specifications 110
RoHS compliance 110
Information for North America 111
Information for Japan 111
Japan Denan statement 111
Electromagnetic compatibility 112
Radio and TV interference 113
Information for the United States 114
Information for Canada 114

Information for Japan..... 114
Index..... 117

Chapter 1: Customer service

Visit the Avaya Web site to access the complete range of services and support that Avaya provides. Go to www.avaya.com or go to one of the pages listed in the following sections.

Navigation

- Getting technical documentation on page 9
- Getting product training on page 9
- Getting help from a distributor or reseller on page 9
- Getting technical support from the Avaya Web site on page 10

Getting technical documentation

To download and print selected technical publications and release notes directly from the Internet, go to www.avaya.com/support.

Getting product training

Ongoing product training is available. For more information or to register, you can access the Web site at www.avaya.com/support. From this Web site, you can locate the Training contacts link on the left-hand navigation pane.

Getting help from a distributor or reseller

If you purchased a service contract for your Avaya product from a distributor or authorized reseller, contact the technical support staff for that distributor or reseller for assistance.

Getting technical support from the Avaya Web site

The easiest and most effective way to get technical support for Avaya products is from the Avaya Technical Support Web site at www.avaya.com/support.

Chapter 2: Getting started

In this chapter

Scope and purpose on page 11

Reference documents on page 12

Components of a CallPilot system on page 15

Scope and purpose

The CallPilot Planning and Engineering Guide provides information and instructions for selecting the best Avaya CallPilot® system for the specific needs of your organization.

The purpose of planning and engineering is to determine the best size, platform, and location for your Avaya CallPilot system. This guide provides information designed to help you plan and engineer your CallPilot system.

If you are installing a High Availability system, see the *High Availability: Installation and Configuration Guide* (NN44200-311) for planning and engineering information specific to a High Availability configuration.

If you plan to configure Geographic Redundancy between two CallPilot servers after the servers have been installed, see the *Geographic Redundancy Application Guide* (NN44200-322).

Issues to consider

At the beginning of the process of planning and engineering a CallPilot system, you must consider the following issues:

- the CallPilot platform that you intend to use
- the CallPilot server location

- the CallPilot server connection to the switch
- the connectivity of the PCs in your network

Note:

If you are installing a High Availability system, see the *High Availability Installation and Configuration Guide* (NN44200-311) for planning and engineering information.

Note:

If you plan to configure Geographic Redundancy (GR) between two CallPilot servers, keep in mind that engineering rules will change due to increased users and mailbox messages on each server in the GR pair. For more information, see the *Geographic Redundancy Application Guide* (NN44200-322).

Note:

To comply with the Restriction of Hazardous Substances (RoHS) Directive 2002/95/EC some of the part numbers now contain an E5 or E6 suffix. For example, part number NTRH2014 is now NTRH2014E6. The part numbers in this guide do not contain the suffix.

Reference documents

For a list of all CallPilot documents, see the following CallPilot Customer Documentation Map.

Table 1: Call Pilot Customer Documentation Map

Fundamentals
Fundamentals Guide (NN44200-100)
Library Listing (NN44200-117)
Planning and Engineering
Planning and Engineering Guide (NN44200-200)
Network Planning Guide (NN44200-201)
Converging the Data Network with VoIP Guide (NN43001-260)
Solution Integration Guide for Communication Server 1000/Call Pilot/Contact Center/Telephony Manager (NN49000-300)
Installation and Configuration
Upgrade and Platform Migration Guide (NN44200-400)
High Availability: Installation and Configuration (NN44200-311)

- Geographic Redundancy Application Guide (NN44200-322)
- Installation and Configuration Task List Guide (NN44200-306)
- Quickstart Guide (NN44200-313)
- Installer Roadmap (NN44200-314)
- Server Installation Guides
  - 201i Server Hardware Installation Guide (NN44200-301)
  - 202i Server Hardware Installation Guide (NN44200-317)
  - 202i Installer Roadmap (NN44200-319)
  - 703t Server Hardware Installation Guide (NN44200-304)
  - 1002rp Server Hardware Installation Guide (NN44200-300)
  - 1002rp System Evaluation (NN44200-318)
  - 1005r Server Hardware Installation Guide (NN44200-308)
  - 1005r System Evaluation (NN44200-316)
  - 1006r Server Hardware Installation Guide (NN44200-320)
  - 600r Server Hardware Installation Guide (NN44200-307)
  - 600r System Evaluation (NN44200-315)
- Configuration and Testing Guides
  - Meridian 1 and CallPilot Server Configuration Guide (NN44200-302)
  - T1/SMDI and CallPilot Server Configuration Guide (NN44200-303)
  - Communication Server 1000 System and CallPilot Server Configuration Guide (NN44200-312)
- Unified Messaging Software Installation
  - Desktop Messaging and My CallPilot Installation and Administration Guide (NN44200-305)

Administration

- Administrator Guide (NN44200-601)
- Software Administration and Maintenance Guide (NN44200-600)
- Meridian Mail to CallPilot Migration Utility Guide (NN44200-502)
- Application Builder Guide (NN44200-102)
- Reporter Guide (NN44200-603)

Maintenance

- Troubleshooting Reference Guide (NN44200-700)
- Preventative Maintenance Guide (NN44200-505)

- Server Maintenance and Diagnostics
  - 201i Server Maintenance and Diagnostics Guide (NN44200-705)
  - 202i Server Maintenance and Diagnostics Guide (NN44200-708)
  - 703t Server Maintenance and Diagnostics Guide (NN44200-702)
  - 1002rp Server Maintenance and Diagnostics Guide (NN44200-701)
  - 1005r Server Maintenance and Diagnostics Guide (NN44200-704)
  - 1006r Server Maintenance and Diagnostics Guide (NN44200-709)
  - 600r Server Maintenance and Diagnostics Guide (NN44200-703)
  - Contact Center Manager Communication Server 1000/Meridian 1 & Voice Processing Guide (297-2183-931)
- End User Information
  - End User Cards
    - Unified Messaging Quick Reference Card (NN44200-111)
    - Unified Messaging Wallet Card (NN44200-112)
    - A-Style Command Comparison Card (NN44200-113)
    - S-Style Command Comparison Card (NN44200-114)
    - Menu Interface Quick Reference Card (NN44200-115)
    - Alternate Command Interface Quick Reference Card (NN44200-116)
    - Multimedia Messaging User Guide (NN44200-106)
    - Speech Activated Messaging User Guide (NN44200-107)
    - Desktop Messaging User Guide for Microsoft Outlook (NN44200-103)
    - Desktop Messaging User Guide for Lotus Notes (NN44200-104)
    - Desktop Messaging User Guide for Novell Groupwise (NN44200-105)
    - Desktop Messaging User Guide for Internet Clients (NN44200-108)
    - Desktop Messaging User Guide for My CallPilot (NN44200-109)
    - Voice Forms Transcriber User Guide (NN44200-110)

Components of a CallPilot system

A CallPilot system comprises three key components:

- the CallPilot server
- the switch resources related to CallPilot
- the desktop client PCs (if the Unified Messaging feature is installed)

The CallPilot system can also include optional features:

- Unified Messaging—installed on the PCs in the CallPilot network
- customer-provided Web server—necessary for the installation of CallPilot Reporter if it will be used for management reporting purposes

CallPilot Web services, including the CallPilot Manager administrator component, usually resides on the CallPilot server, although it can optionally run on the Web server. The My CallPilot end-user Web services can reside on the CallPilot server, or on a separate Web server, or on both.

Servers and switches

The following switches are compatible with CallPilot 5.1:

- Meridian 1*
- Communication Server 1000 (CS 1000), formerly known as Succession 1000
- DMS-100
- SL-100

More information about the compatibility of CallPilot with various types of switches is provided later in this guide.

Desktop PCs and wireless devices

System administrators can use the Web browser on a PC to access CallPilot Manager to

- maintain and administer the CallPilot software
- view CallPilot Reporter reports

If the desktop messaging client is installed, users can download messages from the server using a PC or a wireless device.

System configuration and ordering

The Models & Ordering Procedures document that applies to CallPilot 5.1 lists features and ordering information for each CallPilot server platform. To obtain the Models & Ordering Procedures document, contact your Avaya* channel partner.

Chapter 3: Grounding and power requirements

In this chapter

Overview on page 17

Power and grounding guidelines on page 18

Auxiliary power on page 21

Overview

This chapter outlines the guidelines for providing power and grounding to switch and Avaya CallPilot® equipment, and describes the auxiliary power requirements. However, if the information in this chapter conflicts with the local or national code, then follow the code.

Before the Avaya CallPilot server installation, a qualified electrician must implement the single-point ground reference, as required, between the power outlets of the CallPilot server and the power outlets of the switch.

Voltage:

DANGER OF ELECTRIC SHOCK

If you fail to ground the switch and the CallPilot equipment correctly, the installation can be

- unsafe for personnel
- unprotected from lightning or power transients
- subject to service interruptions, degraded performance, and loss of information.

Power and grounding guidelines

General

The power and ground for the switch and the CallPilot equipment must originate from the same supply service (equipment room service panel or transformer), where the ground conductor and the neutral conductor are connected and referenced to the main building ground. All power feeds must contain a separate safety conductor (green wire).

Note:

Do not use the main building ground directly as the ground reference for the system.

Important:

The 600r, 1005r, and 1006r rack-mount servers are only offered in the ac environment. If you use a dc environment, you must procure a dc to ac inverter.

To ensure a complete power and grounding installation:

- In rack-mount server installations, ensure that the CallPilot server chassis and equipment racks are isolated from other foreign sources of ground. Acceptable isolation methods include: isolation pads, grommets, chassis side rail strips, non-conducting washers, and so on.
- In rack-mount server installations where other equipment is installed in the same 19 inch rack, ensure that all equipment derives ground from the same service panel as CallPilot and the switch, whether or not the equipment is ac or dc powered.
- In rack-mount dc-powered server installations, ensure that the PDU (Power Distribution Unit for dc applications) is installed on the same rack as the CallPilot server. This type of installation is required because the main ground wire for the PDU is not insulated from the metal enclosure.

Power

The service panel, which must be in the equipment room, must not service lighting, air conditioning, heating, generators, or motors. Avaya strongly recommends that supply conductors be dedicated and uninterrupted from a building primary source to the dedicated equipment room service panel.

Power is supplied to the service panel by a power transformer. The transformer typically provides secondary voltages of 208/120 V three-phase four-wire "wye" service, 240/120 V single-phase four-wire "delta" service, or 240/120 V single-phase three-wire service. Collectively, these secondary voltages are referred to as "nominal 208/240 V ac".

A dedicated power transformer for the switch, CallPilot server, and associated auxiliary and telephone operating company interface equipment is preferred. However, a shared transformer or distribution is acceptable.

Do not use ground fault circuit interrupt (GFCI) devices on the switch and CallPilot power feeds.

Single-point ground

The switch and the CallPilot system require a single-point ground (SPG) topology for all switch equipment and all CallPilot associated auxiliary equipment respectively.

The switch and the CallPilot system have several types of grounds and several types of signal returns that are generally referred to as "grounds":

- In ac systems, a logic return (LR or LRTN) and a green wire frame ground, called the ac equipment ground (ACEG), are typically part of the input power cord.
- In dc systems, a logic return (LR or LRTN) and a battery return (RTN), as well as an ac equipment ground (ACEG) green wire, are on the input to the rectifiers.
- All systems must have an external hardwired frame ground connection (also called the personal hazard safety ground). The frame ground is connected internally to the ACEG green wire. As the frame ground is hardwired, it ensures that the equipment has a ground connection even if the system is "unplugged."
- External Communications wiring that meets the requirements as stipulated in NEC Article 800-30 FPN 4 requires the use of lightning protection. The cable sheaths, and protection grounds must be installed as indicated in NEC Article 800 - 33, and Article 800 - 40 (b).

For an SPG topology, each of the preceding grounds, from each of the columns, must terminate at a single connection point before attaching to the actual ground reference at the service panel or transformer. Physically, the SPG is usually a copper bar or plate (referred to as a "bus"). In its simplest form, the SPG (the single connection point) can be an isolated ground bus or an ACEG bus in the service panel or transformer.

Refer to the documentation associated with the PBX switch configured with CallPilot for further information on grounding requirements.

Document title	NTP number
Meridian 1 Installation Planning	553-3001-120
Meridian 1 Power Engineering	553-3001-152

Document title	NTP number
Meridian 1 System Installation Procedures	553-3001-210
Planning and Installation Guide for Option 11C Mini	553-3021-209
Planning and Installation Guide for Option 11C	553-3021-210
Planning and Engineering Guidelines - Succession 1000	553-3023-102

Also refer to the ANSI-J-STD-607-A-2002 standard Commercial Building Grounding (Earthing) and Bonding Requirements for Telecommunications.

Follow these requirements when implementing the SPG:

- All ground conductors must be identified according to local codes and terminated permanently.
- Terminations must be accessible for inspection and maintenance during the life of the installation.
- All grounding conductors must be
  - continuous, with no splices or junctions
  - tagged "Do not remove or disconnect"
  - insulated against contact with foreign grounds
- Grounding conductors must be no load, non-current carrying cables, under normal operating conditions.
- The ground interface in a steel-framed building must have a single connecting reference located at the service panel, to the building steel on the same floor as the switch and the CallPilot system (or within one floor from the switch and the CallPilot system).

Note:

Avaya does not recommend the use of building steel as an integral part of the switch and CallPilot ground system. The building steel is a reference point only.

The dc resistance of the system ground conductor, which runs from the switch to the main building ground, must be as close to zero as possible. The maximum total resistance on all runs within the building must not exceed 0.5 ohms.

Auxiliary power

Terminal devices

Terminal devices in the equipment room require local power. Power for these devices must be wired and fused independently from all other receptacles, labeled at the service panel (to prevent unauthorized power interruption), and referenced to the same interface point on the building system ground as the service panel ground.

Auxiliary power in the equipment room can be supplied by isolated or non-isolated service receptacles, which must match the grounding for the system. In other words, if the switch and the CallPilot server have an isolated ground topology, the receptacles must also be isolated.

Auxiliary equipment

If auxiliary equipment using an RS-232 interface is too remote to be powered from the service panel, a modem or fiber link is required for ground isolation. Failure to provide this isolation defeats the SPG required by the system.

Existing power and grounding

Existing powering and grounding on some sites can make it difficult to ensure that the local power grounding is referenced to the same potential as the system ground. In addition, local power grounding can form part of a common grounding network that is subject to noise from external sources. Under these conditions, where locally powered terminals and equipment connect directly to the system through dc coupled links sharing a common ground, incidental ground loops can form and inject noise onto the system.

Chapter 4: System configurations

In this chapter

CallPilot® architecture on page 23

Compatibility of switches and servers on page 26

Section A: Hardware and software configurations on page 27

CallPilot server on page 28

Avaya Contact Center Server on page 30

Supported switches on page 32

Web server for CallPilot on page 34

CallPilot desktop messaging on page 37

Section B: Connectivity requirements on page 38

Avaya server subnet connections on page 39

ELAN subnet connections on page 41

Meridian 1 connectivity on page 45

CS 1000 connectivity on page 51

T1/SMDI connectivity on page 55

Section C: System requirements on page 58

Compatibility on page 58

Migration from Meridian Mail on page 63

CallPilot® architecture

The following figure shows an example of a network in which an Avaya CallPilot server is connected to a Meridian 1 switch (AML connectivity).

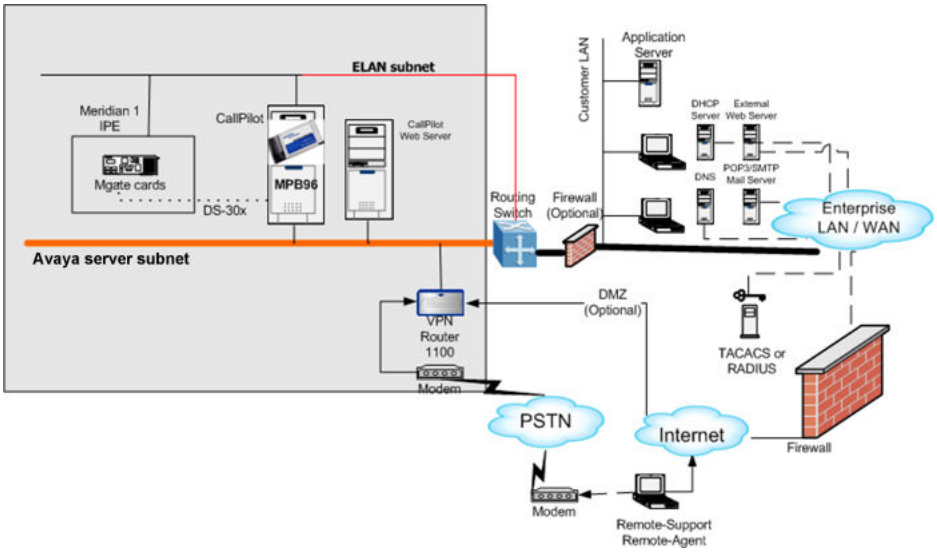

The following figure shows an example of a network in which a 202i server is integrated into an Avaya Communication Server 1000 switch

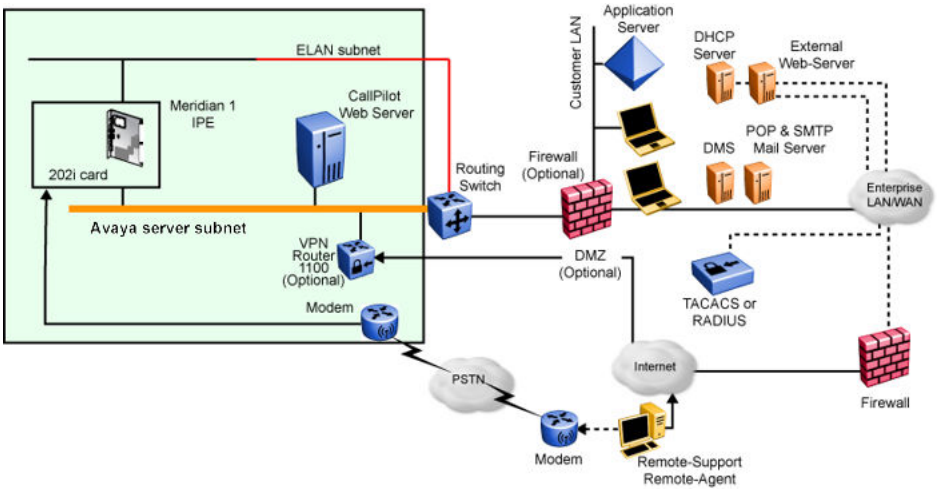

The following figure shows an example of a network in which an Avaya CallPilot server is connected to an Avaya Communication Server 1000 switch (AML connectivity).

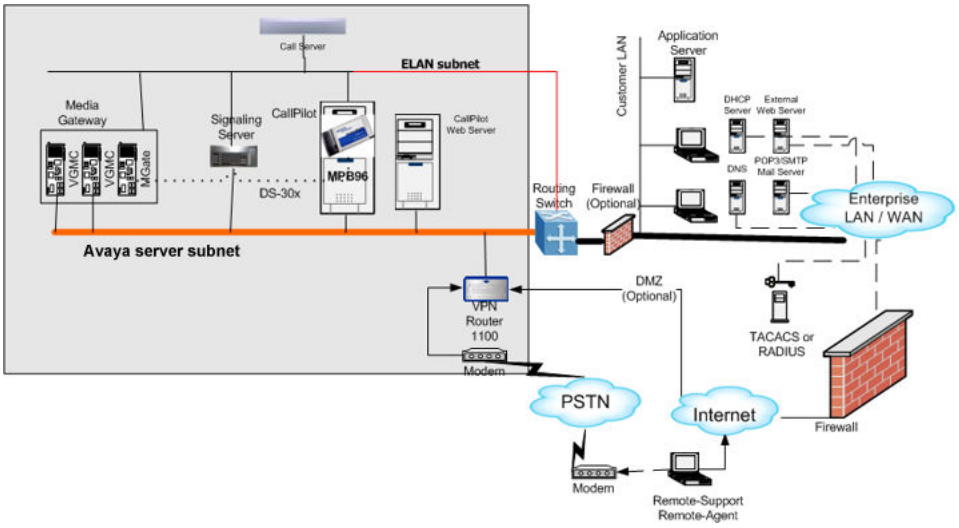

The following figure shows an example of a network in which a CallPilot system is connected to a DMS-100* switch (T1/SMDI connectivity).

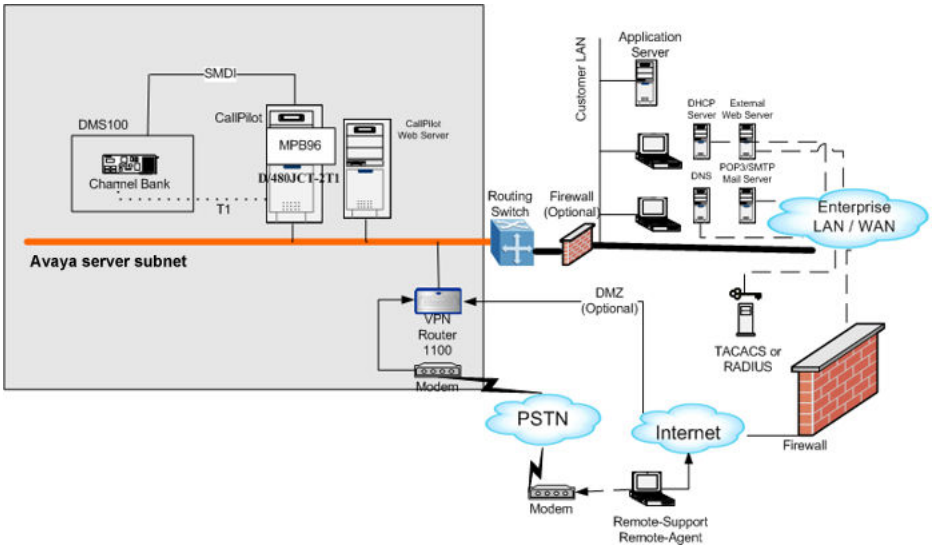

The following figure shows an example of a network in which a CallPilot server is connected to an SL-100* switch (T1/SMDI connectivity).

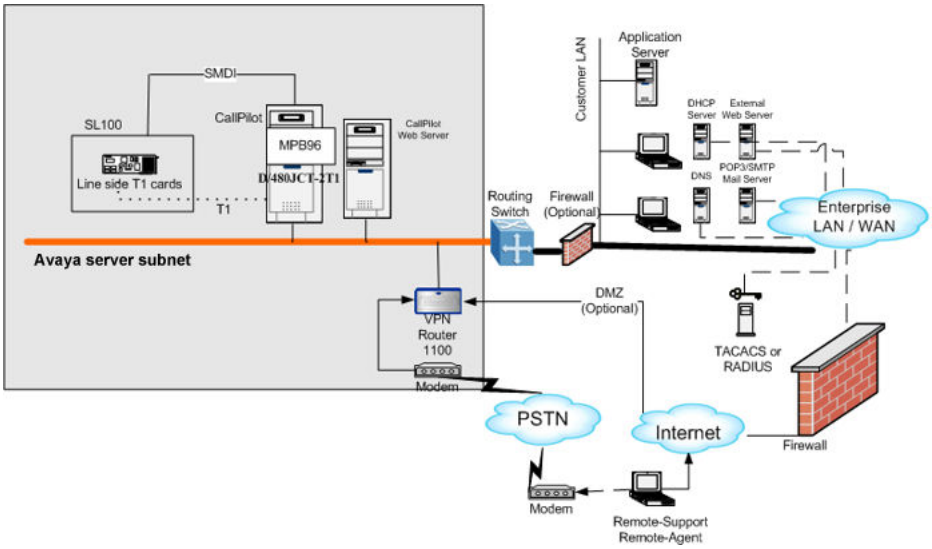

The following table summarizes the connections between CallPilot servers and switches.

Switch	Connection	Service
Meridian 1 and Avaya CS 1000	ELAN subnet	Data (signaling)
	ELAN subnet and DS30X TDM link	Voice
DMS-100 SL-100	SMDI SMDI	Data (signaling) Data (signaling)

Note:

The CallPilot server is connected directly to the users' PCs by way of a Avaya server subnet.

Compatibility of switches and servers

The following table summarizes the compatibility of switching equipment with the CallPilot 5.1 server platforms.

Switch	CallPilot Server Platform							
	201i*	202i	600r	703t*	1005r	1006r	1002rp M1*	1002rp T1/ SMDI
Meridian 1	X	X	X	X	X	X	X	
CS 1000	X	X	X	X	X	X	X	
DMS-100								X

Switch	CallPilot Server Platform							
SL-100								X
* The 201i, 703t, 600r, 1005r and the 1002rp M1 platforms are only supported if they are updated to CallPilot 5.1.								

Web server for CallPilot administration

CallPilot Manager, CallPilot Reporter, and My CallPilot are Web-based applications that require a Web server. If you use CallPilot Manager or My CallPilot, or both, then the CallPilot server can be used as the Web server.

CallPilot can use an optional, external Internet Information Server (IIS) to provide management and end-user Web services. You must have an external Web server to be able to install and use CallPilot Reporter.

Users connect to the Web applications using a Web browser, such as Internet Explorer or Mozilla Firefox.

The Web server hard drive must have approximately 1.0 Gbyte or more of free space available on its system partition (C drive) for CallPilot Web services and for the database of operational measurements.

Desktop messaging clients

The desktop messaging client that is available with CallPilot can be installed on PCs running Windows 2000 Professional, Windows XP Professional, Windows Vista, or Windows 7. For more information about the desktop messaging clients, see Compatibility on page 58.

Section A: Hardware and software configurations

In this section

CallPilot server on page 28

Avaya Contact Center Server on page 30

Supported switches on page 32

Web server for CallPilot on page 34

CallPilot desktop messaging on page 37

CallPilot server

Hardware

The CallPilot application is installed on the CallPilot server hardware platform.

Platform	Type
202i	IPE (the 202i server is installed in the IPE shelf of the switch)
600r	rack-mount
703t	tower
1005r	rack-mount
1006r	rack-mount
1002rp	rack-mount

Software

The CallPilot software configuration comprises the following items:

- server operating system—Windows 2003

  Note:

  The exact name of the operating system is Windows Server 2003, Standard Edition with the Telephony Service Appliance Kit (SAK)

- CallPilot software
- third-party software

Compatibility with other products and environments

Meridian Mail

CallPilot can coexist with Meridian Mail* on the Meridian 1 switch. You can connect CallPilot with Meridian Mail systems on networks that use one or both of the following networking protocols:

- Audio Messaging Interchange Specification-Analog (AMIS-A)
- Enterprise

For more information about the coexistence of CallPilot and Meridian Mail on the same switch, see the *Meridian Mail to CallPilot Migration Guide* (NN44200-502).

Multi-tenant Meridian 1 switch

CallPilot supports users on a multi-tenant Meridian 1 switch as if the users were on a single-tenant system. However, CallPilot does not

- support more than a single customer of a multi-customer Meridian 1 switch
- know to which Meridian 1 tenant a user belongs
- provide administration or billing features by tenant

Internet Telephony Gateway

The Internet Telephony Gateway (ITG) supports the following networking protocols:

ITG version	Networking protocol
1.1 (1.0.34 or later)	AMIS-A Enterprise
2.0	NMS (see Note)

ITG version	Networking protocol

Note:

Additional considerations apply to the NMS implementation on Voice over IP (VoIP) networks with CallPilot. Refer to the product bulletins on the implementation of VoIP and voice messaging.

Antivirus software

Do not install third-party antivirus software unless approved by Avaya. For information about the antivirus software packages that are approved by Avaya for CallPilot, and details on installation and configuration of each, refer to:Product Bulletin P-2009–0039 : CallPilot Support for Anti-Virus Applications.

For details on installing antivirus software on the CallPilot server, refer to the most recent version of the CallPilot Distributor Technical Reference (DTR) document.

Third-party software

The installation of non-authorized third-party software or hardware can destabilize a CallPilot system, can introduce security vulnerabilities, and can degrade the server's capacity and performance. Third-party software or hardware must not be added to a CallPilot server unless specifically authorized in a Avaya document or bulletin. Avaya cannot support CallPilot servers that have unauthorized modifications made to either the software or the hardware. For more information about third-party software, see the Distributor Technical Reference document.

Avaya Contact Center Server

In general, CallPilot has the same capabilities as Meridian Mail. As a result, CallPilot can provide integrated voice services to Contact Center Server. For detailed information about implementing the voice service integration, see the Contact Center Server bulletin.

Important:

CallPilot 5.0 (and later) High Availability servers can be integrated with Contact Center 6 and 7, but it requires supplemental PEP updates on CS 1000, Contact Center, and CallPilot. For more information about CallPilot High Availability and Contact Center Inter-working, reference CallPilot Release 5.x Distributor Technical Reference.

CallPilot can coexist on the same Meridian 1 switch, ELAN subnet, and Avaya server subnet with the following Contact Center products:

Product	Version
Contact Center	4.2, 5.0 and 5.1—for call center interworking 5.0 and 5.1—the CallPilot Web services (CallPilot Manager, CallPilot Reporter, and My CallPilot) can co-reside on the Contact Center Web server , CallPilot Password Change/Reset Service
Symposium Express Call Center	4.2

Signaling between CallPilot and Contact Center Server travels over the ELAN subnet and Avaya server subnet.

CallPilot supports the following voice processing script commands:

- Give IVR
- Give Controlled Broadcast Announcement
- Collect Digits
- Play Prompt
- Open...End Voice Session

Voice services

The CallPilot voice channels that provide voice services must be dedicated to Contact Center and cannot serve for general messaging traffic. The CallPilot voice channels for Contact Center are further partitioned into two groups for the following services:

- Give IVR
- Advanced Voice Processing

CallPilot does not require additional software options to integrate with Contact Center.

CallPilot Application Builder

Use the Application Builder program to create CallPilot applications that callers can access as dialable services. With Application Builder, you can perform the following tasks:

- specify the call functions that you want to include in applications, such as menus and announcements
- design the call flow (the path that calls follow) in an application
- import system prompts, voice items, and customized prompts
- record system prompts, voice items, and customized prompts
- archive and restore applications

In Application Builder, a series of blocks connected by lines represents an application. The graphical display lets you follow the call flow.

Application Builder requires the installation of a client on the administrator's PC. You can download the client, on demand, from the CallPilot Manager Web service to the PC.

For more information about Application Builder, see the *CallPilot Application Builder Guide* (NN44200-102).

Supported switches

Meridian 1

CallPilot supports the following Meridian 1 platforms:

- Option 11C
- Option 11C Mini
- Option 51C
- Option 61C
- Option 81C

New CallPilot installations requires X21 Release 3.0 or later on the Meridian 1 switch.

Avaya Communication Server 1000

The CS 1000 VoIP system includes the following features:

- fully installed and configured CS 1000 server
- Media Gateway card
- Voice Gateway card
- Media Gateway Expansion card (optional)
- connection to a TCP/IP network (ELAN subnet)

CallPilot requires X21 Release 3.0 or later on the CS 1000 system.

For information about X21 patches (if any), refer to the CallPilot Distributor Technical Reference (DTR) Bulletin. You can find this document on the Avaya support site at http://support.avaya.com.

T1/SMDI switches

CallPilot 5.1 supports the DMS-100 and SL-100 T1/SMDI switches:

Two hardware components must be installed and configured on the CallPilot server to ensure the connection to the T1/SMDI switches:

- the simplified message desk interface (SMDI) link
- the T1 links

The SL-100 and DMS-100 switches support the SMDI link using either an input-output controller (IOC) shelf with an NT1X89 card or an NTFX30 input-output module (IOM).

The T1 connection is integrated with the SL-100 switch by way of line side T1 interface cards installed in the intelligent peripheral equipment (IPE) module of the switch. You must have a sufficient number of line side T1 cards for the number of channels purchased. Refer to the Line Side T-1 Interface (LT1) for IPE Services Guide (555-4001-022) for instructions on installing the line side T1 cards.

The line side T1 cards must be configured for ground start. CallPilot does not support loop start. The DMS-100 switch does not use line side T1 cards for the T1 connection. However, the DMS-100 switch requires an external channel bank to support Centrex service.

Note:

The SL-100 switch can also use an external channel bank for call lines.

The T1 links from the SL-100 or DMS-100 switches are terminated on Intel Dialogic boards (D/480JCT-2T1) installed in the CallPilot server.

For programming purposes, the SL-100 switch requires MSL-10 software or higher, and the DMS-100 switch requires NA08 software or higher.

For information on connectivity requirements, see T1/SMDI connectivity on page 55.

Web server for CallPilot

Introduction

You can install three CallPilot applications on the Web server.

Application	Function
CallPilot Manager	System configuration and management
CallPilot Reporter	Report generation
My CallPilot	End-user mailbox configuration, messaging, and documentation
CallPilot Password Change/Reset Service	Provides immediate mailbox password reset capabilities to mailbox owners.

The Microsoft Internet Information Server (IIS) established on the CallPilot server is preconfigured according to the best security practices available.

You can have multiple external Web servers for a single CallPilot server.

You can use one external Web server for up to 20 CallPilot servers.

Configurations of CallPilot Web services

CallPilot Manager, CallPilot Reporter, and My CallPilot can all reside on an external IIS server. In this situation, you have the option to disable the IIS server on the CallPilot server to reduce security risks.

In a hybrid configuration, My CallPilot can reside on the CallPilot server, while CallPilot Manager and CallPilot Reporter reside on the IIS server

CallPilot is supplied pre-engineered to support My CallPilot or CallPilot Manager IIS Web services, or both, and still be capable of providing high performance levels to all other services

running on CallPilot. CallPilot end users and administrators can access the IIS server on the Avaya server subnet using Web browsers.

External Web server configuration

Hardware

The My CallPilot and CallPilot Reporter Web services can generate high CPU loads. The minimum hardware configuration for the external Web server must include

- a 600 MHz PIII processor
- 128 Mbytes of RAM
- 1 Gbyte of free disk space on the system drive (C drive)

Software

The external Web server requires one of the following software configurations:

- Windows 2000 Server with Service Pack 1 or later (Standard version only) running Internet Information Server (IIS) 5.0 (Service Pack 1 or later)
- Windows Server 2003 with Service Pack 1 or later (Standard version only) running IIS 6.0
- Windows Server 2008 with Service Pack 2 running IIS 7.0
- Windows Vista (Standard and Enterprise Editions) running IIS 7.0

Note:

For Windows 2000, the Advanced Server and DataCenter Server versions are not supported. Future support for the DataCenter version is planned.

If the Secure Socket Layer (SSL) technology is to be used, you must purchase and install an additional SSL certificate for use with the IIS. Avaya recommends the following SSL certificate vendors:

- Entrust (http://www.entrust.net/index.htm)
- Verisign (http://www.verisign.com/)

Free disk space

Generally, the Web server must have approximately 1 Gbyte of free disk space available for the installation of CallPilot Web services. If CallPilot Reporter is used for a large CallPilot system or a network of CallPilot systems, Avaya recommends that you estimate the necessary free disk space using the following formula:

```
Free disk space = 300 Mbytes + [total number of channels * (days in DB + 1) * 0.2
Mbytes]
```

- total number of channels = the total number of channels on all CallPilot systems whose data is in the CallPilot Reporter database
- days in DB = the number of days that data are stored in the CallPilot Reporter database

Other Web server considerations

The following factors determine the Web server load generated by CallPilot services:

- the number of active My CallPilot users
- the number of users simultaneously accessing messages using My CallPilot versus the number of users using desktop messaging clients such as Microsoft Outlook
- the number of reports generated during the busy hour

The Web server does not have to be dedicated to CallPilot Web services. The same server can host Web pages or provide standard network services, such as printing and file sharing. However, running other applications and services on the server can slow down CallPilot services and significantly reduce user productivity and satisfaction with the services. Therefore, Avaya recommends dedicating the Web server to CallPilot services.

Monitoring performance

You must monitor the Web server performance after an installation or a major change, such as the addition of users, to detect a possible system overload. If the response time is slow during the busy hour, then use the Windows Performance Monitor (Start > Programs > Administrative Tools > Performance) to determine if the server is overloaded.

The main indicators to monitor are the CPU usage, the available memory, and the physical disk space. The user response time can be degraded if one or all of the following conditions are encountered:

- the CPU usage (shown as Processor Time) is constantly above 90 percent for a significant number of minutes during the busy hour
- the available memory (shown as Available Bytes) is below 4 Mbytes
- the disk space (shown as Physical Disk Space) is insufficient

CallPilot desktop messaging

To calculate the disk space used for voice and fax messages, see the following conversion factors.

Voice messages

CallPilot uses a proprietary sub-band voice encoding at 18 kbit/s for messaging. To calculate the disk space used for voice in the CallPilot message store of desktop messaging, use the following conversion factors.

CallPilot 5.1 offers users the ability to configure the desired WAV encoding format.

Message duration	Format	Storage space
1 minute	WAV-GSM 6.10 *	110 kbytes
1 minute	SBC or VBK	141 kbytes
1 minute	WAV	945 kbytes

* For CallPilot 5.0 running on the 1005r or 600r, all outgoing WAV files are converted to Microsoft WAV-GSM 6.10. This feature helps reduce the storage space required on e-mail servers.

Note:

Messages are kept in the message store on the PC only if they are played on the PC.

Fax pages

To calculate the disk space used for fax in the CallPilot store of desktop messaging, use the following conversion factor:

Message size	Format	Storage space
1 page	TIFF	40 kbytes

Desktop messaging clients

For more information about the desktop messaging software available with CallPilot, see the following documents:

- *Desktop Messaging and My CallPilot Installation and Administration Guide, NN44200-305*
- the user guide for each desktop messaging client

Section B: Connectivity requirements

In this section

Avaya server subnet connections on page 39

ELAN subnet connections on page 41

Meridian 1 connectivity on page 45

CS 1000 connectivity on page 51

T1/SMDI connectivity on page 55

Avaya server subnet connections

Introduction

The CallPilot server connects to the customer's network through the Avaya server subnet. The Avaya server subnet connectivity is required for

- Unified Messaging
- Voice Profile for Internet Mail (VPIM) networking protocol
- Simple Network Management Protocol (SNMP)
- Web services: CallPilot Manager, CallPilot Reporter, and My CallPilot

Hardware requirements

The customer must provide the Ethernet switch or hub, and cables required for the connection of the CallPilot server to the Avaya server subnet or WAN.

Data transmission rates

The CallPilot servers support the following data transmission rates.

Note:

Depending on your network, data transmission rates can fluctuate.

CallPilot platform	Ethernet data transmission rate		
	10 Mbit/s	100 Mbit/s	1 Gbit/s
201i	x	x	
202i	x	x	
600r	x	x	x
703t	x	x	x
1005r	x	x	x

CallPilot platform	Ethernet data transmission rate		
1006r	x	x	x
1002rp	x	x	

Note:

CallPilot does not support token ring Avaya server subnets (4 Mbit/s or 16 Mbit/s).

Network protocols

Supported	Not supported
Windows TCP/IP stack on client PCs	Novell IPX/SPX stack on client PCs

Note:

CallPilot can coexist on networks using IPX/SPX and other non-supported protocols if Windows TCP/IP is used for the CallPilot client-server communication.

Avaya server subnet traffic considerations

You must ensure that the Avaya server subnet has the appropriate bandwidth capacity to support the traffic between the client PCs and the CallPilot server. Calculate bandwidth capacity on the basis of the following information.

Traffic type	Volume	Bandwidth
Desktop traffic from CallPilot to a desktop client or the Web server	1 minute of voice 1 page of fax (average)	200 kbytes 55 kbytes
My CallPilot Web server traffic from the Web server to the browser on the client PC	1 minute of voice (WAV) 1 minute of voice (VBK) 1 page of fax (average)	945 kbytes 141 kbytes 40 kbytes
VPIM networking traffic	1 minute of voice	330 kbytes

Data transfer rates

The following table identifies the average data transfer rates for each CallPilot user.

Traffic type	Voice messaging	Fax messaging	Both
Desktop Messaging	0.09 kbit/s	0.06 kbit/s	0.15 kbit/s
My CallPilot Web server traffic (WAV)	0.12 kbit/s	0.10 kbit/s	0.22 kbit/s
My CallPilot Web server traffic (VBK)	0.15 kbit/s	0.10 kbit/s	0.25 kbit/s

The following considerations apply to the information provided in the previous table.

- The average voice messaging rates are based on the assumption that 60 percent of the voice messages are transferred across the customer data network and the remaining 40 percent are retrieved by phone.
- The average fax messaging rates are based on the assumption that 80 percent of the fax messages are retrieved across the network by fax messaging users with either a desktop messaging or a My CallPilot Web server client, while the remaining 20 percent of the fax messages are retrieved by fax machines.
- The transfer rates for My CallPilot Web server files include the message transfer from CallPilot to the Web server and the subsequent transfer from the Web server to the Web browser.

My CallPilot Web server with VBK (CallPilot proprietary encoding format) requires that the Avaya voice player be installed on the client PC.

ELAN subnet connections

Introduction

The embedded LAN (ELAN) subnet is implemented only if the CallPilot server is connected to a Meridian 1 switch or a CS 1000 system.

You can also implement the ELAN subnet with Layer 2 and Layer 3 switching. However, the specific design of the ELAN subnet is complex; for detailed information, refer to the document Data Networking for Voice over IP (553-3001-160).

ELAN subnet description

The CallPilot server connects to the switch or system by way of an ELAN subnet and one or more proprietary time division multiplexing (TDM) connections (DS30X).

The CallPilot ELAN subnet is a segregated network that carries IP traffic between the following equipment:

- the CallPilot server
- the Meridian 1 switch or CS 1000 system
- a limited number of connected administration PCs

The ELAN subnet is used for real-time, low-delay, and mission-critical signaling between CallPilot and the switch using the proprietary Application Module Link (AML) protocol. The AML protocol is also used by Meridian Mail. All customer data traffic must be kept off the ELAN subnet.

Caution:

Risk of severe performance degradation

Only Avaya equipment must be connected to the ELAN Ethernet switch (layer 2) or hub. To prevent severe performance degradation, the customer's network must not be connected to the ELAN subnet.

The direct connection of the ELAN subnet to external networks (such as the Avaya server subnet), as well as the improper router, bridge, or switch device selection or configuration, can degrade the call processing abilities of the ELAN switches and CallPilot server. A direct connection can also increase the risk of hacker traffic into the network.

Avaya does not recommend the implementation of router and switching technologies that are applied to the ELAN subnet. If you require such connections, contact your Avaya technical support representative.

ELAN subnet power requirements

Customers expect telephone and messaging services to continue through power disruptions. The CallPilot server and the Meridian 1 switch or CS 1000 system must be protected from power failures by uninterruptible power supply (UPS) devices. The ELAN Ethernet switch (layer 2) or hub must also be connected to a UPS.

If power to the ELAN Ethernet switch (layer 2) or hub is disrupted, CallPilot service stops because the AML signaling link to the Meridian 1 switch or CS 1000 system is interrupted.

System administration and the ELAN subnet

You can connect administration PCs to the ELAN subnet to administer CallPilot and the Meridian 1 switch or CS 1000 system.

CallPilot administration PCs are typically located on the Avaya server subnet, if a Avaya server subnet is available.

Caution:

Risk of reduced system performance

Because the ELAN subnet carries critical real-time traffic between the CallPilot server and Meridian 1 switch or CS 1000 system, do not perform high-traffic OA&M activities on the ELAN subnet while CallPilot call processing is in progress. The traffic-intensive tasks include, for example, remote control, large file transfers, backup and restore operations, and printing.

Desktop client PCs and the ELAN subnet

The ELAN subnet is dedicated to the connectivity between CallPilot and the Meridian 1 switch or CS 1000 system, and their associated applications only.

The ELAN subnet does not support high volumes of IP traffic originating within the local ELAN subnet or from external interconnected networks. As a result, the ELAN subnet does not support desktop client PCs.

ELAN subnet hardware requirements

The ELAN subnet runs between CallPilot, Contact Center, Optivity Telephony Manager (OTM), and the Meridian 1 switch or the Avaya CS 1000 system; see the diagram in CallPilot® architecture on page 23. The 10Base-T ELAN subnet is implemented using the following equipment:

- a Medium Attachment Unit (MAU) to one or more 10Base-T transceivers for the connection to the call processor
- category 5 cables
- a dedicated Ethernet switch or hub from either Avaya or a third-party

Hardware requirements for Option 11C

CallPilot does not support the copper-connected Option 11C switch. If you are using a copper-connected Option 11C switch, then you must upgrade it to a Fiber Cabinet Option 11C switch to support the ELAN subnet connection.

Hardware requirements for Options 51C, 61C, and 81C

Options 51C, 61C, and 81C must be equipped with the appropriate Ethernet IODU/C card to support the connection to the ELAN subnet.

Switch	IODU/C card
Option 51C	NT5D61AA/BA (1)
Option 61C	NT5D61AA/BA (1)
Option 81C	NT5D61AA/BA (2)

A Meridian 1 switch that runs X21 release 3.0 can be upgraded with IODU/C cards. The IODU/C cards provide

- Ethernet connectivity to the ELAN subnet (comparable to the capability provided by the IOP/CMDU cards)
- drive unit functions
- input/output processing functions

Cabling between the Meridian 1 switch and the ELAN Ethernet switch (layer 2) or hub

The following table presents the cables required to connect the Meridian 1 switch to the ELAN Ethernet switch (layer 2) or hub.

Switch	Cable PEC	Cable CPC	Connection
Option 11C	NTDK27AA	A0630723	backplane—position P1
Option 51C Option 61C Option 81C	NT7D90CA	A0406481	CORE backplane—slot 16, position F

A DB-15 to 10Base-T transceiver is necessary to convert the DB-15 end of the Ethernet cable to a 10Base-T end. The RJ-45 connector of the transceiver can then be connected to the ELAN Ethernet switch (layer 2) or hub.

Each site must have one or two DB-15 to 10Base-T transceivers, depending on the number of CORE backplanes. You can purchase the DB-15 to 10Base-T transceiver (DB-15 to RJ-45) in any computer supply store, or you can order it from Avaya.

Description	PEC	CPC
Transceiver (MAU to 10Base-T)	NTRH9069	A0795886

ELAN subnet connectivity requirements on the switch

The CallPilot server connects to the Meridian 1 switch or CS 1000 system by way of a proprietary TDM DS30X connection for voice services, and through the ELAN subnet for data (signaling) services.

Separate ELAN subnet connections are required as follows:

- Meridian 1 Option 81 switch: one connection for each call processor
- CS 1000 system: one connection for the call server and one connection for the Media Gateway or Media Gateway Expansion card

Meridian 1 connectivity

Introduction

The CallPilot server connects to the Meridian 1 switch by way of an ELAN subnet, using the TCP/IP protocol at a rate of 10 Mbit/s.

CallPilot requires X21 Release 3.0 or later on the Meridian 1 switch.

Important:

CallPilot does not support Meridian 1 switch, release X11.

IPE (202i) platform connectivity

Each 202i CallPilot server occupies two consecutive slots in the Meridian 1 Intelligent Peripheral Equipment (IPE) shelf, and interfaces with the network loop through one connection on the IPE backplane. From the Meridian 1 switch perspective, the 202i server appears logically equivalent to one regular card.

The 202i CallPilot server can support up to 32 DSO channels. It provides 32 MPUs of DSP processing power.

Tower and rack-mount connectivity

The following boards and cards provide connectivity between servers and switches.

MPB16 board

The MPB16 board is used only for legacy 1002rp systems.

MPB96 board-DS30X

The MPB96 board was shipped with 600r and 1005r servers and is required for the 1002rp server (including SL-100/DMS integration).

MPB96-board CAT5

The MPB96 board-CAT5 is also available on the 600r and 1005r servers and is required on 1006r servers.

MGate-DS30X card

The MGate card occupies one slot in the switch IPE shelf and connects to the MPB96-DS30X board installed in the CallPilot server with a 20-m (60-ft) triple DS30 cable.

Each MGate card provides a maximum of 32 channels. A fully configured 96-channel tower system requires three MGate cards in the switch, while a fully configured 192-channel rack-mount system requires six MGate cards in the switch.

The 202i server does not use an MGate card.

Important:

If more than three MGate cards are installed in the same superloop, callers can experience network blocking. For more information about the installation of MGate cards, see the *Communication Server 1000M and Meridian 1 Planning and Engineering Guide* (553-3021-120). Meridian 1 and CS 1000 traffic reports (LD 2) identify occurrences of network blocking.

For information about establishing the connection between the CallPilot server and the Meridian 1 switch, see the Meridian 1 and CallPilot Server Configuration document.

The following table outlines the number of MPB96 boards and MGate cards that are supported by each CallPilot system with Meridian 1 connectivity.

Server	Number of MPB96 boards	Number of MGate cards
202i	0	0
600r	1	1-3
1005r	1-3	1-6 (See ATTENTION, following)

Important:

Media Gateway shelves in a CS 1000E do not share the same clock reference. Media Gateway expander shelves share the same clock reference as the Media Gateway shelf that they are connected to. In a CS 1000E, all MGate cards connected to the CallPilot system must reside in the same Media Gateway / Media Gateway Expansion shelf pair. For the CS 1000M and CS 1000S, the MGate cards can reside in separate shelves.

MGate-CAT5 card

The MGate card occupies one slot in the switch IPE shelf and connects to the MPB96 board installed in CallPilot servers. The type of cable used to connect the MGate to the MPB96 depends on the type of MPB96 board installed in the CallPilot server. Servers with an MPB96–

CAT5 board must use a CAT5 cable; Servers with an MPB96–DS30X must use a triple DS30 cable. The maximum length of the CAT5 cable is 600-m (1968.5-ft).

Important:

If more than three MGate cards are installed in the same superloop, callers can experience network blocking. For more information about the installation of MGate cards, see the *Communication Server 1000M and Meridian 1 Planning and Engineering Guide* (553-3021-120). Meridian 1 and CS 1000 traffic reports (LD2) identify occurrences of network blocking.

Number of MGate cards and MPB96 boards supported by server type

The following table outlines the number of MPB96 boards and MGate cards that are supported by each CallPilot system with Meridian 1 connectivity.

Server	Number of MPB96 boards	Number of MGate cards
600r	1	1-3
1005r	1-3	1-6
1006r	1-3	1-6

Meridian 1 IPE resource requirements

A non-blocking configuration recommended for the IPE shelf can require the provisioning of additional network loops to the IPE shelf. The IPE shelf version must be NT8D37BA/EC or later.

Meridian 1 software requirements

CallPilot requires Communication Server 1000 (release 3.0) or later on the Meridian 1 switch.

Important:

CallPilot does not support Meridian 1 switch, release X11.

CallPilot requires Release 3.0 or later on the CS 1000.

If the CallPilot server provides Contact Center voice services, refer toContact Center CS 1000/ Meridian 1 and Voice Processing Guide (297-2183-931) for the supported Meridian 1 or CS 1000 software releases.

The X21 base software must include the following feature packages:

Number	Name	Mnemonic
41	Automatic Call Distribution (ACD), Package B	ACDB
46	Message Waiting Center	MWC
214	Enhanced ACD Routing	EAR
215	Enhanced Call Trace	ECT
218	Hold in Queue for IVR*	IVR
247	Call identification	CALL ID
254	Phantom TN	PHTN
324	Next Generation Connectivity (see Note)	NGEN
364	Meridian Communication Exchange/CallPilot	NMCE
Note:		
Package 324 (NGEN) has the following dependencies:		
77	Command Status Link	CSL
153	Application Module Link	X25AP
164	Limited Access to Overlays	LAPW
242	MultiUser Login	MULI
243	Alarm Filtering	ALRM_FILTER

Certain X21 Performance Enhancement Packages (PEP) must also be installed to support CallPilot. For more information about the applicable PEPs, see the CallPilot Distributor Technical Reference (DTR) Bulletin.

Meridian 1 memory and real-time engineering

The real-time impact of CallPilot on Meridian 1 is essentially the same as the impact of Meridian Mail for the equivalent call traffic.

A Meridian 1 switch upgraded to X21 release 3.0 or later can require additional memory.

CallPilot usage of Meridian 1 software resources

Ensure that sufficient software resources are provisioned on the Meridian 1 switch to support CallPilot. The software resources are, for example, terminal number (TN) levels, automatic call distribution (ACD) agents, control directory numbers (CDN) and voice ports. CallPilot does not share Meridian 1 resources with other applications.

The following considerations apply to the provisioning of software resources on the Meridian 1 switch to support CallPilot:

- A primary CDN is required for most traffic. A secondary CDN is required for fax call answering.
- One phantom TN/DN or dummy ACD queue is required for each service that has an entry in the Service DN table, which is equivalent to the voice service directory number (VSDN) table on Meridian Mail. CallPilot uses the phantom TN/DN in the same way as Meridian Mail.
- CallPilot uses one ACD queue to manage its hardware channels. A second ACD DN is required for the default DN.
- CallPilot uses one ACD agent for each channel.
- Each fax user with a virtual fax machine DN requires one phantom DN and one optional direct inward dial (DID) line.
- Each service accessed from outside the Meridian 1 switch requires one DID line.

ACD DN overflow

The Meridian 1 switch does not permit the ACD DN to overflow to a CDN. Therefore, the ACD DN overflow is not possible with CallPilot, which uses a CDN model for call management and control. If ACD DN overflow is required, then use either Symposium Express or Contact Center integrated with CallPilot as a viable alternative that provides enhanced call routing capabilities.

CS 1000 connectivity

Introduction

The CallPilot server connects to the CS 1000 system on the ELAN subnet through the Media Gateway or Media Gateway Expansion card. Voice services are routed through the Media Gateway card and data (signaling) services are routed through the ELAN subnet.

IPE (202i) platform connectivity

Each 202i CallPilot server occupies two consecutive slots in the Media Gateway or Media Gateway Expansion cabinet, and interfaces with the network loop through one connection on the IPE backplane. From the CS 1000 switch perspective, the 202i server appears logically equivalent to one regular card. Refer to the 202i Server Hardware Installation document for details on the 202i server installation.

The 202i CallPilot server can support up to 32 DSO channels. It provides 32 MPUs of DSP processing power.

Tower and rack-mount server connectivity

For detailed information about tower and rack-mount server connectivity, see the Communication Server 1000 and CallPilot Server Configuration document.

MPB16 board

The MPB16 board is only for legacy 1002rp systems and is replaced by the MPB96 board.

MPB96 board-DS30X

The MPB96 board is shipped with the 600r and 1005r servers and is required for the 1002rp server (including SL-100/DMS integration).

MPB96-board CAT5

The MPB96 board-CAT5 is also available on the 600r and 1005r servers and is required on 1006r servers.

MGate-DS30X card

Each MGate card occupies one slot in the switch IPE shelf and connects to the MPB96-DS30X board installed in the CallPilot server with a 20-m (60-ft.) triple DS30 cable.

Each MGate card provides a maximum of 32 channels. A fully configured 96-channel tower system requires three MGate cards in the switch, while a fully configured 192-channel rack-mount system requires six MGate cards in the switch.

Important:

If more than three MGate cards are installed in the same superloop, callers can experience network blocking. For more information about the installation of MGate cards, see the *Communication Server 1000M and Meridian 1 Planning and Engineering Guide* (553-3021-120). Meridian 1 and CS 1000 traffic reports (LD 2) identify occurrences of networking blocking.

The following table outlines the number of MPB96 boards and MGate cards that are supported by each CallPilot system with CS 1000 connectivity.

Server	Number of MPB96 boards	Number of MGate cards
202i	0	0
600r	1	1-3
1005r	1-3	1-6 (see ATTENTION, preceding)
1002rp	1-3	1-6 (see ATTENTION, preceding)

MGate-CAT5 card

The MGate card occupies one slot in the switch IPE shelf and connects to the MPB96 board installed in CallPilot servers. The type of cable used to connect the MGate to the MPB96 depends on the type of MPB96 board installed in the CallPilot server. Servers with an MPB96–CAT5 board must use a CAT5 cable; Servers with an MPB96–DS30X must use a triple DS30 cable. The maximum length of the CAT5 cable is 600-m (1968.5-ft).

Important:

If more than three MGate cards are installed in the same superloop, callers can experience network blocking. For more information about the installation of MGate cards, see the *Communication Server 1000M and Meridian 1 Planning and Engineering Guide* (553-3021-120). Meridian 1 and CS 1000 traffic reports (LD2) identify occurrences of network blocking.

Number of MGate cards and MPB96 boards supported by server type

The following table outlines the number of MPB96 boards and MGate cards that are supported by each CallPilot system with Meridian 1 connectivity.

Server	Number of MPB96 boards	Number of MGate cards
600r	1	1-3
1005r	1-3	1-6
1006r	1-3	1-6

CS 1000 software

The X21 software Release 3.0 or later on the CS 1000 system must include the following feature packages:

Number	Name	Mnemonic
41	Automatic Call Distribution (ACD), Package B	ACDB
46	Message Waiting Center	MWC

Number	Name	Mnemonic
214	Enhanced ACD Routing	EAR
215	Enhanced Call Trace	ECT
218	Hold in Queue for IVR	IVR
247	Call identification	CALL ID
254	Phantom TN	PHTN
324	Next Generation Connectivity (see Note)	NGEN
364	Meridian Communication Exchange/CallPilot	NMCE

Note:

Package 324 (NGEN) has the following dependencies:

77	Command Status Link	CSL
153	Application Module Link	X25AP
164	Limited Access to Overlays	LAPW
242	MultiUser Login	MULI
243	Alarm Filtering	ALRM_FILTER

Certain X21 PEPs must also be installed to support CallPilot. For more information about the X21 PEPs, see the most recent version of the CallPilot Distributor Technical Reference (DTR) Bulletin.

Real-time engineering

CallPilot has a real-time impact on CS 1000. The engineering tool performs the real-time engineering when a CS 1000 system and a CallPilot server are provisioned together.

CallPilot usage of CS 1000 software resources

Ensure that sufficient software resources are provisioned on the CS 1000 system to support CallPilot. The software resources are, for example, ACD agents, CDNs, and voice ports. CallPilot does not share CS 1000 resources with other applications.

The following considerations apply to the provisioning of software resources on the CS 1000 system to support CallPilot:

- A primary CDN is required for most traffic. A secondary CDN is required for fax call answering.
- Each service that has an entry in the CallPilot Service DN table requires one phantom TN/DN.
- CallPilot uses one ACD queue to manage hardware channels. The default DN requires a second ACD queue.
- CallPilot uses an ACD agent for each channel.
- Each fax user with a virtual fax machine DN requires one phantom DN and one optional DID line for each fax user.
- Each service accessed from outside the CS 1000 system requires one DID line.

T1/SMDI connectivity

Introduction

The 1002rp server is the only CallPilot platform that can be connected to T1/SMDI switches. The SL-100 and DMS-100 switches exchange information with the CallPilot server using

- a simplified message desk interface (SMDI) link
- T1 links

MPB96 board

The MPB96 board provides 96 MPUs.

Intel Dialogic D/480JCT-2T1 board

One or more D/480JCT-2T1 boards reside in the CallPilot server. Each D/480JCT-2T1 board supports up to two T1 links and a maximum of 48 channels per board.

The D/480JCT-2T1 board receives the media stream and call control signals from the switch and passes them to the MPB96 carrier boards for processing. A CTBus cable connects the D/

480JCT-2T1 board to the MPB96 board. The CTBus cable must have 1024 timeslots to support the D/480JCT-2T1 boards.

SL-100 and DMS-100 connectivity

SMDI link

The SMDI link is a data link between the serial port COM2 on the CallPilot server and the multimedia processing card (MPC) port on the switch. The SMDI link transports incoming call information and message waiting indicator (MWI) control messages. If the CallPilot server is physically close enough to the switch, then the SMDI link can be a direct cable connection between the server and the switch.

The criteria for direct cable connection depend on whether the switch has an input-output controller (IOC) shelf or an input-output module (IOM):

- With an IOC shelf in the switch, the CallPilot server must be within 15.25 m (50 ft.) of the switch.
- With an IOM in the switch, the CallPilot server must be within 230 m (750 ft.) of the switch.

Use a modem connection for distances that are greater than those specified in the preceding list. The General DataComm 060A010-001 (North American ac version) modem and the Telenetics V3600 33.6K SMDI modem (NTRH9098) are approved for ensuring the connection between the CallPilot server and the switch.

Line side T1 cards

The line side T1 cards in the SL-100 switch send the voice and data signals to the CallPilot server.

Note:

The SL-100 switch can also use an external channel bank for the call lines.

Channel bank for DMS-100

The DMS-100 switch does not use line side T1 cards, and requires an external channel bank for the call lines. The channel bank multiplexes up to 48 universal call distribution (UCD) lines configured on the DMS-100 switch onto two T1 links that are attached to the D/480JCT-2T1 boards in the CallPilot server.

Software requirements

CallPilot requires the following software on the SL-100 and DMS-100 switches:

- SL-100 switch—MSL10 software or later
- DMS-100 switch—NA08 software or later

Programming considerations

The following considerations apply to the programming of the SL-100 and DMS-100 switches:

- A UCD group is defined for each required media type on the switch. Each UCD group has unique directory numbers (DN) and supporting UCD agents.
- Line DNs are created for each directly dialable service. The DNs must be set up so that they can be forwarded to the UCD groups defined for each media type.
- The switch subscriber forwards the calls to the primary voice messaging DN if the condition Busy or No Answer is encountered.
- The MWI feature must be configured for each subscriber set.

The forwarding DN can be configured as either the originally called DN (the first forwarding DN in a call forward chain is the default option) or the redirecting DN (the last forwarding DN in a call forward chain) if the LASTFWDN option is assigned to the SMDI link.

Section C: System requirements

In this section

Compatibility on page 58

Migration from Meridian Mail on page 63

Compatibility

Products and environments

The following table summarizes the compatibility of CallPilot with various products and environments.

Product	CallPilot compatibility
Meridian Mail	Meridian Mail and CallPilot can coexist on the same Meridian 1 switch. Networking to Meridian Mail is available with the following protocols: • Audio Messaging Interchange Specification—Analog (AMIS-A) • Enterprise networking • VPIM with Meridian Mail Net Gateway **Note:** Some compatibility limitations apply.
Meridian Mail Reporter	You cannot use Meridian Mail Reporter to generate reports from a CallPilot server. Meridian Mail supports only Meridian Mail Reporter and CallPilot supports only CallPilot Reporter.
Symposium Call Center 4.2, 5.0 Symposium Express 4.2	CallPilot can coexist with Contact Center or Symposium Express Call Center on the same ELAN subnet and Meridian 1 switch.

Product	CallPilot compatibility
Contact Center 6.0 and 7.0	CallPilot supports the following Contact Center voice-processing script commands: • Give IVR • Give Controlled Broadcast • Collect Digits • Play Prompt • Open...End Voice Session—this command requires Contact Center 4.2 and at least SU07
Internet Telephony Gateway (ITG)	CallPilot AMIS-A and Enterprise networking protocols are supported with ITG release 1.1 (version 1.0.34 or later). ITG 1.1 does not support Network Message Service (NMS), which requires ITG 2.0.
Microsoft Office 2002 (XP), 2003, and 2007	CallPilot desktop messaging clients are compatible.

Application Builder clients and operating systems

CallPilot 5.1 supports the following operating systems for Application Builder clients:

- Windows 2000 Professional with ISO-8859-1 (Latin-1) character set versions

  Note:

  The ISO-8859-1 (Latin-1) character sets cover most West-European languages including, but not limited to, the following: English, French, Spanish, Catalan, Basque, Portuguese, Italian, Albanian, Rhaeto-Romanic, Dutch, German, Danish, Swedish, Norwegian, Finnish, Faeroese, Icelandic, Irish, Scottish, Afrikaans, and Swahili.

- Windows XP Professional
- Windows XP Professional x64 Edition
- Windows Vista
- Windows Vista x64 Edition
- Windows 7
- Windows 7 x64 Edition

Desktop Messaging clients: operating systems

CallPilot 5.1 supports the following operating systems for desktop messaging clients.

- Non-English versions of Windows with localized client
- Windows 2000 Professional
- Windows XP Professional
- Windows Vista
- Windows 7

If desktop messaging or My CallPilot or both are used, see the Desktop Messaging and My CallPilot Installation and Administration Guide for more information.

Customer e-mail clients

CallPilot Desktop Messaging supports the following e-mail clients.

Product	Supported versions
Microsoft Outlook Express	6.0 (released with Internet Explorer 6.0)
Vista Windows Mail	
Microsoft Outlook	2002 (XP), 2003, 2007, 2010 and corresponding Internet Mail Mode versions
Lotus Notes	6.0, 6.5, 7.0, 8.0, and 8.5
Novell GroupWise	6.5, 7.0, and 8.0

My CallPilot Web messaging

My CallPilot Web messaging supports the following operating systems and Internet browsers.

Product	Supported versions
Server side	
Operating system and Internet Information Server (IIS)	IIS 5.0 on Windows 2000 Server SP1 and later. (Standard and Enterprise Editions)

Product	Supported versions
	IIS 6.0 on Windows 2003 (Standard and Enterprise Editions) IIS 7.0 on Windows 2008 (32 and x64) Windows 2008 Server R2 **Note:** For Windows 2000, the Advanced Server and DataCenter Server versions are not supported.
Client side	
Operating system	Redhat Linux Windows 2000 Professional Windows XP Professional Windows Vista Windows 7 Mac OS X (limited support only)
Internet browser	Internet Explorer 7.0, 8.0, and 9.0 Chrome 18.0 Mozilla Firefox 2.0, Mozilla Firefox 11.0 Safari 1.x for Macintosh OS X, Safari 5.1.1

If CallPilot Desktop Messaging and Web messaging are installed on the same client PC, CallPilot Web messaging is compatible with all versions of the player.

Java script and cookies must be enabled in the Web browser.

Support for localized Web browsers is available in English, French, Dutch, German, and traditional Chinese.

Note:

Turn on **Compatibility View** for My CallPilot to display pages correctly in Internet Explorer 9.0. To turn on compatibility view:

1. Open Internet Explorer by clicking the **Start** button. In the **Search** box, type Internet Explorer, and then, in the list of results, click **Internet Explorer**.
2. Click the **Compatibility View** button on the Address bar.

Operating system and Internet browser support with My CallPilot, CallPilot Manager, and CallPilot Reporter

My CallPilot, CallPilot Manager, and CallPilot Reporter support the following operating systems and Internet browsers.

Product	Supported versions
Server side	
Operating system and Internet Information Server (IIS)	Windows Server 2000 (Standard version with SP1 or later), and IIS 5.0
	Windows Server 2003 (Standard version with SP1 or later), and IIS 6.0
	Windows Vista (Standard and Enterprise Editions) and IIS 7.0
	Windows Server 2008 R2 with SP2 and IIS 7.0
Client side	
Operating system	Windows 2000 Professional
	Windows XP Professional
	Windows Vista
	Windows 7
	MAC OS X (for My CallPilot only)
	Linux (for My CallPilot only)
Internet browser	Internet Explorer 6.x with proper Java JRE extension (See note)
	Internet Explorer 7.0 and 8.0
	Internet Explorer 9.0
	Mozilla Firefox 2.0 for Windows and Linux (for My CallPilot only)
	Mozilla Firefox 11.0 for Windows and MacIntosh OS X (for My CallPilot only)
	Safari 1.3.x for Mac (for My CallPilot only)
	Safari 5.1.1 for Macintosh OS X (for My CallPilot only)
	Chrome 18.0 for Windows and MacIntosh OS X (for My CallPilot only)
	Mozilla Firefox 1.7.x for Linux (for My CallPilot only)

Product	Supported versions

Note:

For Windows 2003 you need to install .NET Framework 2.0 on a Web server prior to Reporter installation.

Note:

While using CallPilot Reporter, for proper operation of Java™ on Microsoft Internet Explorer 6.x, you must install Java 2 Runtime Environment (JRE) version 1.3.1, 1.4.2. and 1.5. If you have an earlier version of J2SE, it must be uninstalled first. JRE version 1.4.2.04 is included on your CallPilot 5.0 Application CD-ROM. You can also download the J2SE versions from the following Web sites:

- http://support.avaya.com/css/appmanager/public/support
- http://www.java.com

Java script and cookies must be enabled in the Web browser.

Support for localized Web browsers is available in English, French, Dutch, German, and traditional Chinese.

Software feature key adapter

You must install the CallPilot software feature key adapter (dongle) correctly so that you can access CallPilot Manager.

Migration from Meridian Mail

The Meridian Mail migration utility supports the migration from Meridian Mail systems to CallPilot systems.

For information on the Meridian Mail platforms and releases that can be migrated to CallPilot and on the migration process, refer to the *Meridian Mail to CallPilot Migration Utility Guide* (NN44200-502).

The migration from Meridian Mail to CallPilot provides support for full voice prompt migration. You can migrate the following Meridian Mail voice services to CallPilot:

- menus
- announcements
- fax items

- voice items
- Contact Center voice prompts

Each voice service (for example, a menu) migrated from Meridian Mail is represented as an Application Builder application on CallPilot. This application contains voice or fax items, or both, that were associated with the migrated voice service on Meridian Mail.

The logic of the voice services is not migrated to CallPilot. Only a default application is created in Application Builder. You must complete the application manually so that you can put it into service in CallPilot.

Chapter 5: Determining system size

In this chapter

Overview on page 65

System sizing on page 66

Customer requirements on page 69

Channel requirements on page 72

Voice traffic services on page 77

Fax traffic services on page 81

Speech recognition traffic services on page 83

Storage estimation on page 84

Overview

Introduction

This chapter provides an overview of the enterprise capacity issues that you must consider before installing an Avaya CallPilot® system. Avaya provides engineering tools that determine automatically the type of Avaya CallPilot system that you need on the basis of the information that you provide:

- the number of users
- the application usage
- the busy hour activity

System sizing

Sales engineering tools

Avaya Enterprise Configurator

After completing the gathering of solution planning requirements, you can obtain a customer quotation by way of the Avaya Enterprise Configurator (NNEC) tool. The NNEC is the global enterprise configurator and quotation tool for Avaya voice and Voice over IP (VoIP) portfolios.

Use the NNEC tool to determine the following system requirements:

- Channel media type and resources driven by the number and type of seats and feature usage required.
- Server platform determined by the total number of channels, resiliency requirements, and storage requirements.
- The integration type and amount of interworking connectivity required depending on the selected solution host.

The NNEC replaces Meridian Configurator in North and South America.

The NNEC provides the following quotation methods:

- Engineered Offer Quote (North and South America)
- Functional Offer Quote (Europe, the Middle East, Africa, and Asia)

CallPilot Capacity Engineering Spreadsheet

The CallPilot Capacity Engineering Spreadsheet in Microsoft Excel format is available for prequotation planning. This spreadsheet is available in the CallPilot area established on the support web site at http://support.avaya.com/css/appmanager/public/support. Click Products > Products by category > Alphabetically > CallPilot 5.1 > P.13 CallPilot Sales Engineering.

System requirements

Use the engineering tools to determine the requirements for the following system factors:

- channels
- digital signal processors (DSP) media processing units (MPU)
- storage
- CPU real-time resources

The engineering tools also help you determine

- the CallPilot platform having sufficient channel, DSP, and CPU real-time capacity to meet the requirements of your specific situation
- the hardware for the switch channel connectivity
- the DSP hardware

Channel requirements

Determine the number of voice, fax, and speech-recognition channels required to meet your needs as follows:

1. Estimate the busy-hour traffic using a parameter-driven traffic model.
2. Look up the corresponding channel capacity in the P05 Erlang C traffic table.

The parameters available for modeling traffic are described later in this chapter. Also refer to Traffic capacity tables on page 103, on page Traffic capacity tables on page 103.

DSP MPU requirements

The DSP capacity is calculated in MPUs. The engineering tool determines the required DSP processing power on the basis of the following ratios:

- 1 MPU for each voice channel
- 2 MPUs for each fax channel
- 4 MPUs for each speech-recognition channel

Storage requirements

The storage capacity is calculated in hours of voice messages. The engineering tool multiplies the number of mailboxes by the minutes of voice messages for each mailbox to estimate the voice message storage requirements.

The storage capacity for fax services is determined by multiplying the estimated number of stored fax pages by a mix of the normal and fine densities:

- 212 pages of normal density fax = 1 hour of voice messages
- 106 pages of fine density fax = 1 hour of voice messages

CPU real-time requirements

With the introduction of CPU-intensive services (such as E-Mail by Phone, which uses host-based text-to-speech algorithms), it is necessary to calculate the CPU load of a given set of applications. The engineering tool calculates the CPU load by

1. estimating the total traffic in centum call seconds (CCS) for applications, messaging, and E-mail by Phone services
2. multiplying each service type by load factors
3. adding up the results of the estimations and calculations

CallPilot platform capacity

The engineering tool performs the following tasks for the selected CallPilot platform:

- checks the platform capacity for channels, DSP MPUs, and CPU real-time load against the calculated requirements
- flags instances in which the platform capacity is exceeded

Switch channel connectivity hardware

The engineering tool provisions the switch channel connectivity hardware that is necessary to meet the channel requirements.

DSP hardware

The engineering tool provisions the DSP hardware that is necessary to meet the DSP MPU requirements.

Customer requirements

Principal input

Customer requirements are the principal input into the engineering tools and the major driver of the system capacity. The following parameters must be determined as part of the customer requirements:

Note:

If the IPE option is selected as the System Type parameter, then only Meridian 1 or CS 1000 can be selected as the Switch parameter.

Note:

If CallPilot is ordered in conjunction with a Meridian 1 switch, then only the Meridian 1 parameter can be selected.

Note:

If CallPilot is ordered in conjunction with a CS 1000 system, then only the CS 1000 parameter can be selected.

Parameter	Initial value	Minimum	Maximum	Comments
System Type (IPE, tower, rack-mount)	None	Not applicable	Not applicable	The selection of any option enables all the CallPilot inputs.
Voice Users	Blank	0	8000 (202i) 20 000 (600r) 50 000 (1002rp, 1005r, and 1006r)	Enter the number of voice mailboxes.

Parameter	Initial value	Minimum	Maximum	Comments
			See Voice Users maximums on page 72.	
Email by Phone Users	Blank	0	The number of voice mailboxes	Enter the number of mailboxes with E-mail by Phone using text to speech.
Speech Activated Messaging	Blank	0	The number of voice mailboxes	Enter the number of mailboxes with speech activated messaging (SAM).
Fax Users	Blank	0	The number of voice mailboxes	Enter the number of mailboxes with Fax Messaging.
Users with Single (Voice/Fax) DN	Blank	0	The number of fax users	Enter the number of fax mailboxes with a Single DN used for both voice and fax access.
Desktop Messaging	Blank	0	8000 (202i) 20 000 (600r, 1005r, 1006r, 1002rp)	Enter the number of mailboxes with desktop messaging.
Switch (Meridian 1, CS 1000, SL-100, DMS-100)	None	Not applicable	Not applicable	Select a type of switch to determine the setup requirements for connectivity (see notes).
NMS (yes or no)	N/A	N/A	N/A	Drives the CallPilot NMS feature enablement and potential Meridian 1 software.
Mobile Users	Blank	0	The number of voice mailboxes	Enter the number of mailboxes with SAM and E-mail by phone seats.
Users on NMS Satellite M1s	Blank	0	The number of voice mailboxes	Enter the number of mailboxes that are to be used by

Parameter	Initial value	Minimum	Maximum	Comments
				users in one or more NMS satellite locations (remote Meridian 1 switches) through the NMS feature. • The maximum number of NMS satellite locations is 999. • This field is disabled when system connectivity is selected for non-Meridian 1 switches.
Power (ac/dc)	ac	Not applicable	Not applicable	The ac and dc power options are available for the 1002rp system. The 600r, 1005r, and 1006r are only available with ac power. You must procure an inverter to use dc power. The tower systems are available only with the ac power option; selecting dc causes the configuration tool to provision a dc power inverter.
Number of Voice Menu Applications	2	0	2500 (600r, 1005r, 1002rp,)	Enter the number of voice applications created by Application Builder.
Number of Fax On Demand Applications	0	0	2500	Enter the number of Fax On Demand applications created by

Parameter	Initial value	Minimum	Maximum	Comments
				Application Builder.
Number of Contact Center Channels	0	0	Maximum number of voice channel capacity for the selected platform (minus one which is reserved for recording and maintaining prompts).	Enter the number of voice channels that are dedicated to the Contact Center.

Voice Users maximums

The Voice Users maximums are the limits to software right-to-use (RTU) licences only. That is, the number associated with the Voice Users parameter value (such as 8000, 20 000, and 40 000) represents the maximum number of mailboxes that can be configured on a platform. The actual limit to the number of voice users that a CallPilot system can support at an adequate service level is affected by many factors and can be determined only with an engineering tool.

Channel requirements

Channel types

CallPilot provides three types of media channels:

Channel type	Support
voice	voice services (Voice Mail)
fax	voice and fax services (Fax On Demand)
speech recognition	voice, fax, and speech activated messaging services

Channel type	Support

Note:

For a T1/SMDI system, you can define channels as "Outgoing calls" to prevent problems caused by contention between incoming and outgoing calls. If you expect a significant volume of outgoing calls such as Remote Notification (RN), Delivery To Telephone (DTT) or Delivery To Fax (DTF), treat channels defined as "Outgoing calls" as a separate type in this table.

Busy hour

The busy hour (BH) can be different for each channel type.

- Voice channels are typically busiest in mid-morning and mid-afternoon, although the BH can vary according to the business schedule of the customer.
- Speech recognition (SR) channels can be busiest during the time when users drive to work and back home.
- Faxes can arrive most frequently at yet a different time of day.

Consider the BH traffic separately for each channel type.

Consider the BH for peak usage of outgoing channels in T1/SMDI systems. See the above table.

Usage assumptions

Basic user

The following assumptions apply to the BH voice port usage for a basic user:

- 0.4 call answering sessions of 40 seconds each
- 0.35 DTMF login sessions of 70 seconds each
- 10 percent of messages require a 60-second BH telephone call
- analog networking increases traffic by 5 percent

Mobile user

The following assumptions apply to the SAM and SR usage for mobile users:

- The frequency of SAM usage during the SR BH is 70 percent of the telephone set usage during the voice BH.
- An SR session lasts 70 seconds.

Fax user

A fax user receives 0.2 faxes (three pages each) during the fax BH.

Desktop user

The desktop users view received faxes on their PCs and therefore reduce the usage of fax ports needed for printing faxes.

Sizing the number and type of channels

Perform the following tasks to size the number and type of channels:

1. Estimate the busy hour traffic in CCS for each channel type.
2. Look up the channel requirements in the Erlang C P.05 traffic table. See CCS values and channel requirements table on page 104.

You can determine the traffic levels using one of the following factors:

- default assumptions in the system sizing tools
- estimations and measures of daily calls and faxes
- estimations and measures of outgoing calls (for a large volume of outgoing traffic in T1/SMDI systems only)

Default assumptions in the system sizing tools

The system sizing tools contain default assumptions for typical business usage levels for voice, fax, and SAM services. The traffic modeling parameters and their default values are covered later in this section. Use the default values of traffic modeling parameters to obtain the overall channel sizing for various user populations.

1. Typical channel requirements for users without fax and SR usage.

Users	Voice	Fax	SR	Total channels	Total MPUs
100	5	0	0	5	5
200	7	0	0	7	7
500	11	0	0	11	11
1000	18	0	0	18	18
2000	31	0	0	31	31
3000	44	0	0	44	44
5000	69	0	0	69	69
7000	94	0	0	94	94
9000	120	0	0	120	120
11 000	144	0	0	144	144
13 000	168	0	0	168	168
15 000	192	0	0	192	192

2. Typical channel requirements assuming that 2% of the users are mobile users, 2% of the users are fax users, and 100% of the users are desktop users. This assumes that 35% of telephone mailbox logins are displaced by desktop users who play messages on their PC.

Users	Voice	Fax	SR	Total channels	Total MPUs
100	5	1	1	7	11
200	6	1	1	8	12
500	10	1	2	13	20
1000	15	1	2	18	25
2000	26	1	2	29	36

Users	Voice	Fax	SR	Total channels	Total MPUs
3000	36	2	3	41	52
5000	56	2	3	61	72
7000	76	2	4	82	96
9000	95	2	4	101	115
11 000	116	2	5	123	140
13 000	136	2	5	143	160
15 000	156	2	6	164	184
17 000	172	3	6	181	202

3. Typical channel requirements assuming that 10% of the users are mobile users, 20% of the users are fax users, and 50% of the users are desktop users. This assumes that 35% of telephone mailbox logins by desktop users are displaced by desktop users who play messages on their PC.

Users	Voice	Fax	SR	Total channels	Total MPUs
100	5	1	2	8	15
200	6	1	2	9	16
500	10	2	3	15	26
1000	16	2	3	21	32
2000	28	3	5	36	54
3000	39	3	6	48	69
5000	61	4	8	73	101
7000	83	5	10	98	133
9000	104	6	12	122	164
11 000	128	6	14	148	196
13 000	148	7	16	171	226
14 500	164	8	17	189	248

4. Typical channel requirements assuming that 25% of the users are mobile users, 50% of the users are fax users, and 100% of the users are desktop users. This assumes that 35% of telephone mailbox logins are displaced by desktop users who play messages on their PC.

Users	Voice	Fax	SR	Total channels	Total MPUs
100	4	2	2	8	16
200	6	2	3	11	22
500	9	2	4	15	29
1000	15	3	5	23	41
2000	25	4	8	37	65
3000	34	5	11	50	88
5000	53	7	15	75	127
7000	72	9	20	101	170
9000	90	10	24	124	206
11 000	180	12	29	149	248
13 000	128	14	33	175	288

Daily calls and faxes

If existing traffic reports are not available, but average numbers of daily calls or faxes are known or estimated, then you can determine the number of calls and faxes during the peak busy hour using this formula:

Peak hour traffic = 13% of daily traffic

Voice traffic services

Principal services

The following principal services generate traffic on voice channels:

- Voice Call Answering service
- Voice Logon (Mail) service
- Email by Phone on voice channels

- Application Builder services
  - voice menus
  - auto attendants
- Fax On Demand requests
- Outcalling (Remote notification and delivery to telephone)
- Networking (Enterprise and AMIS)

Provisioning voice channels on CallPilot

Customers often purchase CallPilot to replace an existing voice mail system. If the port capacity on the existing voice mail system provided satisfactory service levels, then simply provision the same number of voice channels on CallPilot without engineering the solution. Enter the number of voice channels in the Voice Channels Override parameter of the Meridian Configurator or NetPrice tool.

If a single CallPilot system replaces two or more existing voice mail systems, then it is not necessary to provision as many voice channels on the CallPilot system as the number of voice channels on all the voice mail systems that are replaced. Larger systems increased traffic efficiency. When a single CallPilot server replaces two or more existing voice mail systems, Avaya recommends using the engineering tool to size the channel requirements on the basis of the number of CallPilot users.

Modeling busy hour voice traffic

The following table presents the parameters used to estimate the traffic in hours for each principal voice traffic service. The engineering tools consider these parameters to be advanced parameters. The sales engineer generally leaves the advanced parameters unchanged. However, the engineering tools use the advanced parameters to enable the sales engineer to adapt the traffic model to the needs and behavior of the customer.

Field name	Initial value	Minimum	Maximum	Comments
Voice Call Answering Session Calls	0.4	0.1	5	Enter the number of call answering calls in the busy hour (BH) for each mailbox.
Voice Call Answering Session AHT	40	10	200	Enter the average hold time (AHT) in seconds for the BH.

Field name	Initial value	Minimum	Maximum	Comments
Voice Logon Session AHT	70	10	300	Enter the AHT in seconds for the BH.
Total Busy Hour Message Access	0.35	0.1	1.0	Enter the number of expected single message retrievals from all potential modes (DTMF, SAM, and Desktop) for each mailbox during the BH.
EBP Session AHT	240	10	600	Enter the E-mail by Phone (EBP) session AHT in seconds for the BH.
Pct DTMF Voice Mail Accesses using EBP	10%	00	100%	Enter the percentage of dual-tone multifrequency (DTMF) logins that make use of EBP.
Voice Menus Calls	5	1	200	Enter the number of calls for each voice menu application in the BH.
Voice Menus AHT	60	5	200	Enter the AHT in seconds for the BH.
Voice Menus: %Xfrd	33%	0	100%	Enter the percentage of voice menu calls that are to be transferred.
Estimated number of Voice Forms to be implemented	0	0	2500	How many individual Voice Form SDNs are available to callers?
Voice Form Call AHT (seconds)	100	20	400	Enter the average Voice Form hold time (AHT) in seconds for the BH.
Busy Hour Calls to each Voice Form	10	0	500	Enter the number of Voice Form calls in the BH.
% of Voice Forms transcribed by phone	50%	0	100%	Percentage of Voice Forms transcribed by phone and utilizing a voice channel to listen to Voice Forms while transcribing. If all Voice Form transcription activities are serviced entirely through the data network without a voice

Field name	Initial value	Minimum	Maximum	Comments
				channel involved, the percent is zero.
Auto Attendant Calls	40	5	1000	Enter the number of auto attendant calls in the BH.
Auto Attendant AHT	30	5	90	Enter the AHT in seconds for the BH.
Fax On Demand Request Calls	2	1	200	Enter the number of request calls (on voice channels) for each Fax On Demand application in the BH.
Fax On Demand Requests AHT	60	5	200	Enter the AHT in seconds for fax requests.
Outcalling (RN and DTT) % of Calls	5%	0	100%	Enter the percentage of Voice Call Answering calls (% of Calls) that can result in Outcalling calls.
Outcalling (RN and DTT) AHT	60	10	180	Enter the AHT in seconds.
Analog Networking Percentage	3%	0	100%	Enter the percentage of analog messaging traffic (Enterprise or AMIS networking). The more VPIM networking is used, the lower this percentage must be. If VPIM networking is the only protocol used, then set this parameter to zero.

Fax traffic services

Principal services

These are the principal services that generate traffic on fax channels:

- Fax On Demand applications with same call fax access
- Fax On Demand callback delivery
- Fax auto attendant (fax express messaging)
- Fax call answering
- Delivery to fax services
- Fax broadcasting (multicast to fax service)
- Fax printing to fax machines

Estimating fax channels

In some situations, the CallPilot fax channels replace a small number of fax machines that have high inbound traffic. Avaya does not recommend that you replace the fax machines with fax channels on a one-for-one basis. Instead, Avaya recommends that you estimate the average number of

- fax messages per fax user
- pages per fax message

Enter the estimated average numbers into the Advanced parameters box of the engineering tool.

Modeling busy hour fax traffic

The following table presents the parameters used to estimate the traffic for each principal fax service. The engineering tools consider these parameters to be advanced parameters. The sales engineer generally leaves the advanced parameters unchanged. However, the

engineering tools use the advanced parameters to enable the sales engineer to adapt the traffic model to the needs and behavior of the customer.

Field name	Initial value	Minimum	Maximum	Comments
Fax Messaging Calls	0.1	0.05	1000	Enter the number of Fax Messaging calls during the BH per mailbox.
Fax Messaging Pages	3	1	100	Enter the average number of pages per fax message during the BH.
Fax Printing Displaced By Desktop	90%	10	100%	Enter the percentage of fax printing that is displaced by users reading fax messages on the desktop (and possibly printing them to a network printer) instead of printing the fax messages to a fax machine.
Fax On Demand—Call Back Calls	2	1	200	Enter the number of calls that can be made by the Call Back feature per fax on demand application during the BH.
Fax On Demand—Call Back Pages	4	0	99	Enter the number of pages that can be sent by way of the Call Back feature.
Fax Broadcast Recipients	Blank	0	5000	Enter the number of fax broadcast recipients. Set this parameter to a non-zero value only if the broadcasts occur during BHs.
Fax Broadcast Max Wait time	4	0.2	20	Enter the maximum waiting time (in hours) for delivering the fax broadcast to all recipients.
Fax Broadcast Pages	3	1	100	Enter the average number of pages per fax broadcast message.

Speech recognition traffic services

Principal services

These are the principal services that generate traffic on speech recognition channels:

- speech activated messaging (SAM)
- E-mail by Phone on speech recognition channels

Mobile users typically use these services from wireless phones to listen to voice and e-mail messages without using their hands and looking at a telephone display.

Modeling busy hour speech recognition traffic

The busy hour for speech recognition services can be different from the overall system busy hour.

The following table presents the parameters used to estimate the traffic for each principal speech recognition traffic service. The engineering tools consider these parameters to be advanced parameters. The sales engineer generally leaves the advanced parameters unchanged. However, the engineering tools use the advanced parameters to enable the sales engineer to adapt the traffic model to the needs and behavior of the customer.

Field name	Initial value	Minimum	Maximum	Comments
Speech Activated Messaging Session AHT	75	10	300	Enter the average hold time (AHT) in seconds for SAM sessions.
Telset Accesses Via SAM	70	10	100	Enter the number of BH users of SAM. These users are desktop or SAM users away from their desks, or SAM users without desktop messaging rights. The SAM users prefer SAM to DTMF, yet some SAM users can use DTMF logins in environments where it is inappropriate to speak

Field name	Initial value	Minimum	Maximum	Comments
				commands; for example, in open cubicles. The value of this parameter reflects the likelihood that a user with SAM rights who must access messages using a phone set chooses SAM over DTMF.
Pct SAM Accesses with EBP	20%	00	100%	Enter the percentage of time that users access E-mail by Phone (EBP) by way of a SAM session.

Storage estimation

Storage calculation assumptions

The engineering tools make the following assumptions when estimating the storage space:

- one page of normal fax = 1/212 hour
- one page of fine resolution fax = 1/106 hour
- voice storage overhead factor = 20 percent of voice stored
- average length of a voice message = 1 minute

The following parameters are used to calculate the storage hours:

Field name	Initial value	Minimum	Maximum
Minutes of voice messages per mailbox	6	1	360
Pages of fax per mailbox	5	1	635

Chapter 6: Engineering the server

In this chapter

Avaya CallPilot® server capacities on page 85

CallPilot product capacities on page 86

202i server features on page 88

600r server features on page 89

1005r server features on page 89

1002rp (T1/SMDI) server features on page 91

Remote access service connectivity on page 91

Avaya CallPilot® server capacities

The following table summarizes the Avaya CallPilot server capacities. For other capacities and features, see the appropriate server section in this chapter.

Item	202i	600r	1005r	1006r	1002rp
Channels	32	96	192	192	192
DSP MPUs	32	96	288	288	288
Storage hours[a]	350	1200	2400	2400	2400
Maximum directory size [b]	50 000	50 000	50 000	50 000	50 000
Maximum number of mailboxes[c]	8000	20 000	15 500	15 500	15 500
Maximum number of voice-only users[d]	3000	7000	15000	15000	50 000
Maximum number of logged-on unified messaging users [e f g]	12 200	12 200	12 200	12 200	12 200

Item	202i	600r	1005r	1006r	1002rp
RAID (level 1 hardware mirroring only)	Not supported	Not supported	Standard (Double channel)	Standard (Double channel)	Standard (Double channel)
Disks--hot swappable	No	No	Yes	Yes	Yes
Disks--redundant	No	No	Yes	Yes	Yes
System fans--hot swappable	Not applicable	No	No	No	Yes
System fans--redundant	Not applicable	Yes	Yes	Yes	Yes

a. The number of storage hours does not include the storage reserved for voice prompts.
b. The maximum number of permanent remote users that can be created on a server is determined by the following formula: Max Permanent Remote Users = Maximum Directory Size - Local Users (mailboxes) - Temporary Remote Users. (See the Network Planning Guide for more background information.)
c. The maximum number of mailboxes that can be created on a system. However, this number is not necessarily the number of users who can use the system.
d. The maximum number of voice-only users with typical voice mail usage that can be supported with a P.05 grade of service with all voice channels. User capacity is lower if fax or mobile user features are configured. Use the Meridian Configurator or NetPrice tool in all cases to obtain an engineered solution.
e. The limit is not enforced.
f. The maximum number of unified messaging clients that can be logged on at one time. This number is not the keycode limit. The keycode limit for desktop messaging is the same as the maximum limit for mailboxes.
g. The value is based on platform memory limits. Each logged-on desktop or Web user requires 20 bytes.

CallPilot product capacities

Overview

The product capacities provided in the following table are reference values. The footnotes at the end of the table indicate special conditions that apply to specific items.

Item	Limit
Number of Application Builder services	2500
Levels of imported applications in an Application Builder service	20

Item	Limit
Number of faxes stored in an Application Builder service	3000
Number of voice prompts in an Application Builder service	3000
Voice messages for each mailbox	1000
Minutes for each mailbox	600
Service directory numbers (SDN)—previously known as Voice Service directory numbers (DN)	2500
Minutes of voice per message	120
Pages of fax for each message	100
Max. Call Answering Message Length[a]	3599 seconds
Number of voice prompt languages	6
Number of speech recognition languages[b]	3
Number of shared distribution lists (SDL)	No limit
Entries for each SDL	999
Number of personal distribution lists (PDL) for each mailbox	99
Entries for each PDL	200
Selections for each fax on each fax-on-demand session	99
Pages for each fax selection	99
User Greeting length (each) in minutes	10
Seconds for a Personal Verification, Site Spoken Name	12
System Greeting length in minutes	10
Maximum Announcement length in minutes	10
Classes of service	80
Number of temporary remote user references	5000
Private network sites	500
Open VPIM Short-Cut Network Sites	500
Number of CDP steering codes for each network location	500
Number of NMS satellite locations	999
Tenants	1
Customers	1
Restriction Permission Lists (RPL)[c]	200
DNs for each mailbox	8
Number of concurrent administration sessions	16

Item	Limit
Maximum simultaneous E-Mail by Phone sessions	20
Maximum number of E-Mail by Phone languages	10
Number of directory entry users (DEU)[d]	unlimited

a. The maximum number of pages in a fax can also be limited by the Max. Call Answering Message Length field, which sets an upper limit for the length of incoming voice and fax messages.
b. The number of voice prompts and speech recognition languages must be identical.
c. Each list contains up to 30 restriction and 30 permission codes.
d. The number of directory entry users does not count against other user classes such as mail box users or remote users.

202i server features

Feature	Characteristics
DSP configuration	Four DSPs embedded on the motherboard
Hark disk	One SAS (serial attached SCSI) 2.5" hard disk
Volumes	VS1 (system volume) - 350 hours of storage
Ports	Five integrated USB 2.0 ports on faceplate
Software feature key	Installed on motherboard
Serial port	None
Parallel port	None
Video	D-Sub VGA on faceplate
ELAN subnet and Avaya server subnet connectivity	10/100 Base-T on faceplate
CLAN subnet and Avaya server subnet connectivity	10/100 Base-T on faceplate
Power	From the IPE shelf
Keyboard/mouse	via USB
Backup	via USB or ethernet (USB to SCSI adapter supported for SLR tape drive)
Remote support (RRAS) modem	External USB modem connect to faceplate USB port

600r server features

Feature	Characteristics
DSP configuration	12 DSPs on the MPB96 board—96 MPUs
Hard disks	One hard disk—RAID not available
Volumes	VS1 (system volume)—400 hours VS102 (user volume)—400 hours VS103 (user volume)—400 hours
USB ports	Three integrated USB 2.0 ports
Data ports	One serial, one mouse, one keyboard, one video
Tape drive	SLR75 external
SCSI controller	Integrated 68 pin external VHDCI Ultra 320
ELAN subnet and Avaya server subnet connectivity	Dual integrated NICs at 10/100/1000 Mb/s
Additional subnet connect (for HA systems)	Two dual PCI NICs at 10/100/1000 Mb/s
Power	One 250W ac, not hot swappable

1005r server features

Feature	Characteristics
DSP configuration	12 DSPs on each MPB96, up to 3 MPB96s per server board — 288 MPUs
Hard disks	• two hard disks in a RAID configuration (RAID 1 - mirroring) • total storage capacity: 2400 hours • the hard disks are hot swappable
Volumes	VS1 (system volume)—500 hours VS102 (user volume)—950 hours VS103 (user volume)—950 hours
USB ports	Three integrated USB 2.0 ports

Feature	Characteristics
Data ports	1 serial, 1 mouse, 1 keyboard, 1 video
Tape drive	SLR75 external
SCSI controller	Integrated 68 pin external VHDCI Ultra 320
ELAN subnet connectivity and Avaya server subnet connectivity	Dual integrated NIC at 10/100/1000 Mb/s
Additional subnet connect (for HA system)	Two dual PCI NICs at 10/100/1000 Mb/s
Power	Two 500W ac hot swap redundant

1006r server features

Feature	Characteristics
DSP configuration	12 DSPs on each MPB96, up to 3 MPB96s per server board — 288 MPUs
Hard disks	• two hard disks in a RAID configuration (RAID 1 - mirroring) • total storage capacity: 2400 hours • the hard disks are hot swappable
Volumes	VS1 (system volume)—500 hours VS102 (user volume)—950 hours VS103 (user volume)—950 hours
USB ports	Three integrated USB 2.0 ports
Data ports	1 serial, 1 mouse, 1 keyboard, 1 video
Tape drive	SLR75 external
SCSI controller	Integrated 68 pin external VHDCI Ultra 320
ELAN subnet connectivity and Avaya server subnet connectivity	Dual integrated NIC at 10/100/1000 Mb/s
Additional subnet connect (for HA system)	Two dual PCI NICs at 10/100/1000 Mb/s
Power	Two 500W ac hot swap redundant

1002rp (T1/SMDI) server features

Feature	Characteristics
DSP configuration	36 DSPs on each MPB96 board—288 MPUs
Interface to the switch	Up to 4 Intel Dialogic D/480JCT-2T1 boards that carry the media stream and call control signals to and from the switch.
Hard disks	• six hard disks in a RAID configuration (RAID 1 - mirroring) • total storage capacity: 2400 hours • the hard disks are hot swappable
Volumes	VS1 (system volume)—500 hours VS102 (user volume)—950 hours VS103 (user volume)—950 hours
Data port	Two serial ports • a serial port (COM1) that supports an external modem (particularly for remote technical support) • a serial port (COM2) that provides the SMDI connection to the switch
RRAS connectivity	The RS-232 COM1 connector on the rear of the CallPilot server provides the connection to an external modem.
Parallel port	Available
Software feature key	Installed in the parallel port
Avaya server subnet connectivity	10/100Base-T Ethernet optional network card

Remote access service connectivity

The external modem lets administrators and technical support personnel administer the CallPilot server from a remote location.

- Use the Microsoft Windows Routing and Remote Access Service (RRAS) to establish the remote connection to the CallPilot server.
- Use the Symantec pcAnywhere software to control the CallPilot server (600r, 1005r, 1006r, 1002rp, and 202i) over the RRAS connection.

or

- Use the Windows Remote Desktop Connection software to control the CallPilot server over the RRAS connection.

Chapter 7: Selecting a site

In this chapter

Space requirements for the AvayaCallPilot® server on page 93

CallPilot power supply requirements on page 97

Environmental specifications on page 99

Space requirements for the AvayaCallPilot® server

You must consider the physical space occupied by the Avaya CallPilot server as part of your planning activities. This section provides guidelines for determining the adequate space that you must provide for the server.

General requirements

Install the CallPilot server in an area that is

- free of static electricity
- exempt from vibrations
- away from a sprinkler system, as well as from water, steam, and any liquid-carrying pipes
- safe for personnel and equipment
- protected against electromagnetic interference (EMI) from the following sources:
  - broadcast stations
  - radar
  - mobile communications
  - high-voltage power lines
  - power tools

- office equipment such as photocopiers

Space requirements

Install the server in an area that provides enough space for

- the front and rear cabinet doors to open and close
- the servicing or removal of components

Switch room space planning

When you plan for the space needed for the CallPilot server and peripherals, you must also consider the space required in the switch room.

Ethernet switch or hub, and cables

Ensure that sufficient space is available for the Ethernet switch or hub, and cables.

Important:

Always use shielded Ethernet cables to connect the CallPilot servers to the Ethernet switch or hub.

Peripheral devices

You must ensure that sufficient space is available for the following peripheral devices:

- modem
- monitor
- keyboard (with integrated track-ball)
- mouse

202i server

The 202i server is installed in two consecutive slots in the peripheral shelf of a Meridian 1 or Avaya Communication Server 1000. The following lists the 202i faceplate connectors:

- 5 USB connectors for keyboard, mouse, and peripherals
- VGA video connector
- 2 integrated NIC ports

600r server

The 600r server is installed in a customer-supplied shelf. The following table lists the server characteristics.

Characteristic	Value
Height	44.4 mm (1.75 in.)
Width	444.3 mm (17.5 in.)
Depth (distance from front to back)	508 mm (20 in.)
Weight of fully loaded system equipped with • one SCSI drive • DVD-ROM/CD-RW drive	10 kg (23 lb)

Note:

The 600r server is supplied with industry-standard 48.3 cm (19 in.) rack rails that can accommodate racks with a maximum depth of 61 cm (24 in.) between the mounting posts. Check the rack you are using and ensure that the Avaya-supplied server rack rails are suitable for your specific installation requirements. For depths greater than 61 cm (24 in.), Avaya recommends that you purchase a third-party rack shelf that can safely hold up to 23 kg (50 lb.)

1005r server

The 1005r server is installed in a customer-supplied shelf. The following table lists the server characteristics:

Characteristic	Value
Height	87.6 mm (3.45 in.)
Width	435.3 mm (17.14 in.)
Depth (distance from front to back)	508 mm (20 in.)
Weight of fully loaded system equipped with • two SCSI drives • DVD/CD-ROM drive	20 kg (44 lb)

Note:

The 1005r server is supplied with industry-standard 48.3 cm (19 in.) rack rails that can accommodate racks with a maximum depth of 61 cm (24 in.) between the mounting posts. Check the rack you are using and ensure that the Avaya-supplied server rack rails are suitable for your specific installation requirements. For depths greater than 61 cm (24 in.), Avaya recommends that you purchase a third-party rack shelf that can safely hold up to 34 kg (75 lb.)

1006r Server

The 1006r server is installed in a customer-supplied shelf. The following table lists the server characteristics:

Characteristic	Value
Height	87.3 mm (3.44 in.)
Width	451.3 mm (17.77 in.)
Depth (distance from front to back)	838.2 mm (33 in.)
Weight of fully loaded system equipped with • two SCSI drives • DVD/CD-ROM drive	30 kg (67 lb)

Note:

The 1006r server is supplied with industry-standard 48.3 cm (19 in.) rack rails that can accommodate racks with a maximum depth of 61 cm (24 in.) between the mounting posts. Check the rack you are using and ensure that the Avaya-supplied server rack rails are suitable for your specific installation requirements. For depths greater than 61 cm (24 in.), Avaya recommends that you purchase a third-party rack shelf that can safely hold up to 34 kg (75 lb.)

1002rp server

The 1002rp server is installed in a customer-supplied shelf. The following table lists the server characteristics:

Characteristic	Value
Height	320 mm (12.5 in.)
Width	483 mm (19 in.)
Depth (distance from front to back)	• without front bezel: 495 mm (19.5 in.) • with front bezel: 533 mm (21 in.)
Weight of fully loaded system equipped with • six SCSI drives • CD-ROM drive • floppy drive • tape drive	45.5 kg (100 lb)

CallPilot power supply requirements

Introduction

You must consider the power supply requirements for the CallPilot server as part of your planning activities. This section defines the power supply requirements.

Single-point grounding

Warning:

Risk of personal injury and risk of hardware failure

The power outlets that are used by the CallPilot server and its peripheral devices must be connected to the single-point ground (SPG) reference used by the switch connected to the CallPilot server.

If this requirement is not met, power transients can cause personal injury or hardware failure, or both.

Avaya strongly recommends that a qualified electrician establish the proper SPG before the installation of the CallPilot server.

For more information about the SPG reference, see Grounding and power requirements on page 17

UPS recommendation

Avaya recommends using an uninterruptible power supply (UPS) or an equivalent device to power the CallPilot server. The UPS provides two important services that are essential to the maintaining of high-availability and mission-critical messaging:

- The UPS conditions the power by filtering power brown-outs and transients, which can shorten the server life and damage the server hardware.
- The UPS reduces the risk of unplanned power outages, which can corrupt severely the operating system components of a server.

If a UPS protects the switch, then Avaya recommends using a UPS to power the Ethernet switch or hub to prevent service loss due to power outages.

Power requirements

The CallPilot servers require different types of power input and different levels of power usage. The following table summarizes the CallPilot power requirements:

Device	Power input	Power usage
202i	Provided by the Meridian 1 IPE shelf or Communication Server system.	

Device	Power input	Power usage
600r	120 V ac 240 V ac	250 W
1005r	120 V ac 240 V ac	500 W
1006r	120 V ac 240 V ac	750 W
1002rp	120 V ac 240 V ac	400 W
1002rp dc	48 V, 20 A dc (see Note)	500 W
External tape drive	110 V	7.2 W
Modem	110 V with a power adapter that provides 9 V ac to 15 V ac at 10 W	10 W
Monitor	110 V ac	90 W

Note:

The NTRH9032 dc to ac power converter is no longer available. Avaya recommends that you supply a third-party dc to ac power converter that provides at least 1000 W of capacity for the 600r, 1005r, 1006r, and 1002rp servers and their peripherals. Ensure that the power converter is properly installed, according to the manufacturer's instructions.

If you use the Avaya MFA150 rectifier (which is supplied with 30 A breakers and two 20 A breakers in the Spare Circuit Breaker Kit, 20 A [P0729846]), then you must configure the rectifier to supply the two 20-A dc circuits for the rack-mount server.

Environmental specifications

General

Always consider the environmental specifications when planning an adequate location for the CallPilot servers.

Before considering the server environmental specifications, you must take into account the switch environmental specifications.

The proper operating temperature and humidity are important for the longevity of the servers. The tables provided in this section summarize the key environmental specifications of the CallPilot servers.

The "non-operating" term used in the tables refers to the environmental conditions that have to be maintained during shipping and storage.

202i server

Environmental condition	Specification
Recommended temperature	15°C to 30°C (59°F to 86°F)
Absolute temperature	10°C to 45°C (50 °F to 113°F)
Long-term storage temperature	–20°C to 60°C (–4°F to 140°F)
Short-term storage temperature	–40°C to 70°C (–40 °F to 158°F)
Change rate temperature	less than 1°C (1.8°F) per 3 minutes
Recommended relative humidity (RH)	20% to 55% RH (non-condensing)
Absolute RH	20% to 80% RH (non-condensing)
Long-term storage RH	°5% to 95% RH at –40°C to 70°C (–40 °F to 158°F) respectively (non-condensing)

600r server

Parameter	Condition	Specification
Temperature	Operating	5°C to 35°C (41°F to 95°F)
	Non-operating	–40°C to 70°C (–40°F to 158°F)
Heat load	Operating	600 BTUs/hr
Humidity	Non-operating	95% at 23 to 40°C (104°F)
Shock	Operating	2 G, 1 millisecond duration
Electrostatic discharge	Operating	15 kV or more
Altitude	Operating	1829 m (6000 ft)

Parameter	Condition	Specification
Handling drop	Operating	Operational after a free fall from 458 mm (18 in.)

1005r server

Parameter	Condition	Specification
Temperature	Operating	5°C to 35°C (41°F to 95°F)
	Non-operating	–40°C to 70°C (–40°F to 158°F)
Heat load	Operating	1200 BTUs/hr
Humidity	Non-operating	95% at 23 to 40ºC (104ºF)
Shock	Operating	2 G, 11 ms
Electrostatic discharge	Operating	15 kV or more
Altitude	Operating	1 829 m (6000 ft)
Handling drop	Operating	Operational after a free fall from 18 in.

1006r server

Parameter	Condition	Specification
Temperature	Operating	10°C to 35°C (50°F to 95°F)
	Non-operating	–40°C to 70°C (–40°F to 158°F)
Heat load	Operating	1200 BTUs/hr
Humidity	Non-operating	90% at 23 to 40ºC (104ºF)
Shock	Operating	2 G, 11 ms
Electrostatic discharge	Operating	15 kV or more
Altitude	Operating	1 829 m (6000 ft)
Handling drop	Operating	Operational after a free fall from 18 in.

1002rp server

Parameter	Condition	Specification
Temperature	Operating	5°C to 35°C (41°F to 95°F)
	Non-operating	–40°C to 70°C (–40°F to 158°F)
Humidity	Operating	5% to 95% at 40°C (104°F) non-condensing
	Non-operating	0% to 95% at 40°C (104°F), non-condensing
Shock	Operating	1.25 G, 10 ms (10.0 G, 11 ms in the appropriate chassis)
	Non-operating	30.0 G, 10 ms (40.0 G, 11 ms in the appropriate chassis)
Vibration	Operating	0.25 G at 5 Hz to 100 Hz (1.5 G over 5 Hz to 100 Hz in the appropriate chassis)
	Non-operating	5 G at 5 Hz to 100 Hz
Altitude	Operating	4 572 m (15 000 ft)
	Non-operating	15 240 m (50 000 ft)

Traffic capacity tables

In this chapter

Types of traffic capacity tables on page 103

CCS values and channel requirements table on page 104

Types of traffic capacity tables

Introduction

When calculating the number of channels required on your Avaya CallPilot® system, take into consideration the differences between sizing Meridian 1 switches and sizing non-Meridian 1 switches.

Types of tables to use

The following table identifies the traffic capacity table to use for your Avaya CallPilot system and switch type. The actual traffic capacity tables begin on page CCS values and channel requirements table on page 104.

Table 2: Busy hour CCS (BHCCS) traffic capacity table type

Switch and media type	Erlang C P.05 BHCCS (40-second AHT)	Erlang B P.02 BHCCS
Meridian 1 and Avaya Communication Server 1000—Voice, Fax, and ASR	_	
SL-100	_	
DMS-100	_	

Switch and media type	Erlang C P.05 BHCCS (40-second AHT)	Erlang B P.02 BHCCS

Note:

The Erlang B table is only needed if there is no call queuing, such as when a Multi-Line Hunt Group is used to distribute the calls.

CCS values and channel requirements table

Introduction

This section provides the traffic capacity tables to use for calculating channel requirements.

Before using the table

To determine which column of the following table to use when calculating channel requirements, refer to Types of tables to use on page 103.

CCS values			CCS values		
Number of channels	Erlang C P.05 GOS	Erlang B P.02 GOS	Number of channels	Erlang C P.05 GOS	Erlang B P.02 GOS
1	2	1	97	3155	3062
2	14	8	98	3190	3097
3	33	22	99	3225	3132
4	54	40	100	3260	3167
5	78	60	101	3295	3202
6	104	82	102	3330	3237
7	130	106	103	3366	3272
8	158	131	104	3401	3307
9	186	157	105	3436	3342
10	215	183	106	3471	3377
11	244	210	107	3506	3412

CCS values			CCS values		
Number of channels	Erlang C P.05 GOS	Erlang B P.02 GOS	Number of channels	Erlang C P.05 GOS	Erlang B P.02 GOS
12	274	238	108	3541	3446
13	304	267	109	3577	3481
14	334	295	110	3612	3516
15	365	325	111	3647	3551
16	396	354	112	3682	3587
17	427	384	113	3717	3622
18	459	414	114	3753	3657
19	491	444	115	3788	3692
20	523	475	116	3823	3727
21	555	505	117	3858	3762
22	587	536	118	3893	3797
23	619	567	119	3929	3832
24	652	599	120	3964	3867
25	684	630	121	3999	3902
26	717	661	122	4034	3937
27	750	694	123	4070	3973
28	783	725	124	4105	4008
29	816	757	125	4140	4043
30	849	790	126	4175	4078
31	882	822	127	4211	4113
32	915	854	128	4246	4148
33	948	887	129	4281	4184
34	982	919	130	4317	4219
35	1015	952	131	4352	4254
36	1049	985	132	4387	4289
37	1082	1017	133	4423	4325
38	1116	1050	134	4458	4360
39	1150	1083	135	4493	4395
40	1183	1116	136	4529	4430
41	1217	1149	137	4564	4466

CCS values			CCS values		
Number of channels	Erlang C P.05 GOS	Erlang B P.02 GOS	Number of channels	Erlang C P.05 GOS	Erlang B P.02 GOS
42	1251	1182	138	4599	4501
43	1285	1215	139	4635	4536
44	1319	1249	140	4670	4571
45	1353	1282	141	4706	4607
46	1387	1315	142	4741	4642
47	1421	1349	143	4776	4677
48	1455	1382	144	4812	4713
49	1489	1416	145	4847	4748
50	1523	1449	146	4883	4783
51	1558	1483	147	4918	4819
52	1592	1517	148	4953	4854
53	1626	1550	149	4989	4890
54	1660	1584	150	5024	4925
55	1695	1618	151	5060	4960
56	1729	1652	152	5095	4996
57	1764	1685	153	5130	5031
58	1798	1719	154	5166	5067
59	1832	1753	155	5201	5102
60	1867	1787	156	5237	5137
61	1901	1821	157	5272	5173
62	1936	1855	158	5301	5208
63	1970	1889	159	5343	5244
64	2005	1923	160	5379	5279
65	2040	1957	161	5414	5316
66	2074	1992	162	5449	5350
67	2109	2026	163	5485	5386
68	2143	2060	164	5520	5421
69	2178	2094	165	5556	5456
70	2213	2129	166	5591	5492
71	2248	2163	167	5626	5527

CCS values			CCS values		
Number of channels	Erlang C P.05 GOS	Erlang B P.02 GOS	Number of channels	Erlang C P.05 GOS	Erlang B P.02 GOS
72	2282	2197	168	5662	5563
73	2317	2232	169	5698	5598
74	2352	2266	170	5733	5634
75	2387	2300	171	5769	5669
76	2421	2335	172	5804	5705
77	2456	2369	173	5840	5741
78	2491	2404	174	5875	5776
79	2526	2438	175	5911	5812
80	2561	2473	176	5946	5847
81	2596	2507	177	5981	5883
82	2630	2542	178	6017	5918
83	2665	2576	179	6053	5954
84	2700	2611	180	6088	5989
85	2735	2646	181	6124	6025
86	2770	2680	182	6159	6061
87	2805	2715	183	6195	6096
88	2840	2750	184	6230	6062
89	2875	2784	185	6266	6067
90	2910	2819	186	6302	6203
91	2945	2854	187	6337	6238
92	2980	2889	188	6373	6274
93	3015	2923	189	6408	6310
94	3050	2958	190	6444	6345
95	3085	2992	191	6479	6381
96	3120	3028	192	65	6417

Regulatory information

In this chapter

Grounding on page 109

General compliance and safety information for specific countries on page 110

Electromagnetic compatibility on page 112

Radio and TV interference on page 113

Grounding

Make sure that the electrical ground connections of the power utility, telephone lines, and internal metallic water pipe system, if present, connect together. This precaution is for the users' protection, and is particularly important in rural areas.

Caution:

Risk of equipment damage

The Avaya CallPilot® system frame ground of each system cabinet or chassis must be tied to a reliable building ground reference.

Warning:

Risk of electrocution

Do not attempt to make electrical ground connections yourself. Contact your local electrical inspection authority or electrician to make electrical ground connections.

For more information about the preceding issues, see Grounding and power requirements on page 17

General compliance and safety information for specific countries

If insufficient planning or technical information is available for your country of operation, contact your regional telecommunications distributor or authority for assistance.

Information for European countries

Safety specifications

The Avaya CallPilot system meets the following European safety specifications: EN 60825 and EN 60950.

RoHS compliance

Certain Avaya servers meet requirements of the Restriction of Hazardous Substances Directive 2002/95/EC, applicable in countries affected by the EUED (European Union Environmental Directives). RoHS requirements impose restrictions on the type and quantity of materials used in the manufacturing and construction of Electronic and Electrical Equipment (EEE). See the following table that lists the servers that are RoHS compliant.

Server model	Notes
202i	This server is RoHS compliant.
600r	This server is RoHS compliant.
1005r	This server is RoHS compliant.
1006r	This server is RoHS compliant.

Information for North America

CallPilot server models 600r, 1005r, 1006r, 1002rp, and 202i comply with the following standards:

- UL 60950-1 Information Technology Equipment Safety Part 1- General Requirements (U.S.A.)
- CSA-C22.2 No. 60950-1-03 Safety Telecom Information Technology Equipment Safety, Part 1- General Requirements (Canada)

Information for Japan

Japan Denan statement

The following applies to server models 600r, 1005r, 1006r, and 1002rp:

Warning

Please be aware of the following while installing the equipment:

- Please use the connecting cables, power cord, and AC adaptors shipped with the equipment or specified by Avaya to be used with the equipment. If you use any other equipment, it may cause failures, malfunctioning or fire.
- Power cords shipped with this equipment must not be used with any other equipment. If the above guidelines are not followed, it may lead to death or severe injury.

警告

本製品を安全にご使用頂くため、以下のことにご注意ください。

- 接続ケーブル、電源コード、ACアダプタなどの部品は、必ず製品に同梱されております添付品または指定品をご使用ください。添付品・指定品以外の部品をご使用になると故障や動作不良、火災の原因となることがあります。
- 同梱されております付属の電源コードを他の機器には使用しないでください。

上記注意事項を守らないと、死亡や大怪我など人身事故の原因となることがあります。

Electromagnetic compatibility

The following table summarizes the electromagnetic compatibility (EMC) specifications for Class A devices.

Jurisdiction	Standard	Title
United States	FCC CFR 47 Part 15	FCC Rules for Radio Frequency Devices (see Note)

Note:

FCC CFR 47 Part 15.21 statement: "Note: This equipment has been tested and found to comply with the limits for a Class A digital device, pursuant to part 15 of the FCC Rules. These limits are designed to provide reasonable protection against harmful interference when the equipment is operated in a commercial environment. This equipment generates, uses, and can radiate radio frequency energy and, if not installed and used in accordance with the instruction manual, may cause harmful interference to radio communications. Operation of this equipment in a residential area is likely to cause harmful interference in which case the user will be required to correct the interference at his own expense."

Jurisdiction	Standard	Title
Canada	ICES-003	Interference-Causing Equipment Standard: Digital Apparatus
Europe	EN 55022/CISPR 22	Information technology equipment—Radio disturbance characteristics—Limits and methods of measurement (see Note)
	EN 55024	Information technology equipment—Immunity characteristics—Limits and methods of measurement
	EN 61000-3-2	Limits for harmonic current emissions (equipment input current <= 16 A per phase)
	EN 61000-3-3	Limitation of voltage fluctuations and flicker in low-voltage supply systems for equipment with rated current <= 16 A

Note:

EN 55022/CISPR 22 statement: "WARNING This is a class A product. In a domestic environment this product may cause radio interference in which case the user may be required to take adequate measures."

Australia	CISPR 22/AS/NZS 3548	Limits and methods of measurement of radio disturbance characteristics of information technology equipment (see Note 2)
Korea	KN22	Information technology equipment — Radio disturbance characteristics — Limits and methods of measurement
Korea (continued)	KN24	Information technology equipment — Immunity characteristics — Limits and methods of measurement
Taiwan	CNS 13438	Limits and methods of measurement of radio disturbance characteristics of information technology equipment

Radio and TV interference

Important:

Avaya recommends that the user make modifications to the CallPilot system only if these modifications are expressly approved by Avaya. If a user makes modifications to the system without Avaya approval, such modifications can void the user's authority to operate the equipment.

Information for the United States

The CallPilot system complies with Part 15 of the FCC rules in the United States. Operation is subject to the following two conditions:

- The system must not cause harmful interference.
- The system must accept any interference received, including interference that can cause undesirable operation.

If the CallPilot system causes interference to radio or television reception, which can be determined by placing a telephone call while monitoring, the user is encouraged to try to correct the interference by the following measures:

- Reorient the receiving TV or radio antenna where this can be done safely.
- Move the TV or radio in relation to the telephone equipment.

If necessary, ask a qualified radio or television technician or supplier for additional information. Also, you can refer to the document "How to Identify and Resolve Radio-TV Interference", prepared by the Federal Communications Commission. This document is available from:

U.S. Government Printing Office Washington dc 20402

Information for Canada

The CallPilot system does not exceed Class A limits for radio noise emissions from digital apparatus, as set out in the radio interference regulations of Industry Canada.

This equipment complies with the CE Marking requirements.

Information for Japan

The following applies to server models 600r, 1005r, 1006r, and 1002rp:

This is a Class A product based on the standard of the Voluntary Control Council for Interference by Information Technology Equipment (VCCI). If this equipment is used in a

domestic environment, radio disturbance may occur, in which case, the user may be required to take corrective action.

この装置は、情報処理装置等電波障害自主規制協議会 (VCCI) の規定に基づくクラス A 装置です。この装 置を家庭環境で使用すると電波妨害を引き起こすことがあります。この場合には使用者が適切な対策を取るように要求されることがあります。

Index

Numerics

1002rp server 98
    power supply requirements 98
1005r server 98
    power supply requirements 98
1006r server 98
    power supply requirements 98
202i server power supply requirements 98
600r server 98
    power supply requirements 98

A

ACD agent 50, 54
ACD queue 50, 54
administrative PC, configuration 34
announcements 63
    migrating from Meridian Mail Voice Services 63
Avaya Networks server subnet 39

B

busy hour fax traffic 81
    modeling 81
busy hour Speech Recognition traffic 83
    modeling 83
busy hour voice traffic 78
    modeling 78

C

cable, multi I/O 91
    connections 91
        RS-232 91
cables, ELAN Ethernet switch (layer 2) or hub 44
calculation, channel requirements 67
calculation, CPU real-time requirements 68
calculation, DSP MPU requirements 67
calculation, storage requirements 68
CallPilot administration 27
    Web server 27
CallPilot Engineering Spreadsheet 66
CallPilot Manager 27, 62
    Internet browser support 62
CallPilot Reporter 62
    Internet browser support 62
cautions 43
    ELAN subnet 43
        and OA and M activities 43
CCS values and channel requirements 104
    table of 104
channel bank 57
channel requirements 67
COM1 connection, description 91
compatibility 15, 26, 58
    products and environments 58
    servers and switches 15, 26
configuration 34
    administrative PC 34
connections 91
    COM1, description 91
connectity 46
    M1 switch 46
connectivity 46, 51, 55
    CS 1000 51
    M1 switch 46
    T1/SMDI, SL-100 and DMS-100 55
connectivity requirements 45
    ELAN subnet 45
Contact Center Server 30
CPU real-time requirements 68
customer requirement parameters 69
    table of 69
customer service 9

D

data transfer rates 40
data transmission rates 39
desktop clients and ELAN subnet 43
Desktop Messaging client OS 27
Dialogic D/480JCT-2T1 55
DID line 50, 54
distributor 9
DMS-100 ..... 23, 33, 55
documentation 9
DSP hardware 69
DSP MPU requirements 67
dummy ACD Queue 50

E

E-Mail by Phone 68
e-mail environments 60
ELAN subnet 42, 43
and desktop client PCs, attention 43
and switch performance, risk 43
power requirements 42
system administration 43
ELAN subnet connections 41, 43
hardware 43
engineering tools, system requirements 67
determining size and capacity 67
engineering tools, system sizing 66
Meridian Configurator 66
NetPrice 66
environmental specifications 99

F

fax channels 81
estimating 81
fax items 63
migrating from Meridian Mail Voice Services 63
fax traffic parameters 81
feature key adapter 63
free space 27
Web server hard drive 27

G

ground, single point 19, 98
grounding and power requirements 17

H

High Availability 11

I

IIS Web server 27
input-output controller (IOC) 33
input-output module (IOM) 33
ISO-8859-1 character set 59

L

line side T1 card 33

M

MAU to 10BaseT transceiver 43
menus 63
migrating from Meridian Mail Voice Services 63
Meridian 1 48
IPE resource requirements 48
Meridian 1 switch 29, 32
multi-tenant 29
Meridian 1, software resources 50
provisioning 50
Meridian Configurator 66
Meridian Mail 29
Meridian Mail Voice Services 63
migrating announcements 63
migrating fax items 63
migrating menus 63
Meridian Mail, migration from 63
migrated announcements 63
from Meridian Mail Voice Services 63
migrated fax items 63
from Meridian Mail Voice Services 63
migrated menus 63
from Meridian Mail Voice Services 63
migration from Meridian Mail 63
mission-critical signaling 42
multi I/O cable 91
description 91
RS-232 connection 91
multi-tenant 29
Meridian 1 29
My CallPilot 27, 60, 62
Internet browser support 60, 62
Web messaging 60

N

NetPrice 66
NNS subnet 39
NNS subnet connectivity 39

O

OA and M and ELAN subnet, caution 43

P

performance 43
risk, ELAN subnet and switch 43
phantom DN 54
phantom TN 54
phantom TN/DN 50
power and grounding 18
power supply requirements 97

primary CDN 50, 54
principal services 77, 81, 83
fax traffic 81
Speech Recognition traffic 83
voice traffic 77
product capacities 86
table of 86

R

regulatory information 109
Reporter 27
reseller 9
resource requirements, Meridian 1 IPE 48
risk, ELAN subnet and switch performance 43
RS-232 connection 91

S

SCbus cable 55
secondary CDN 50, 54
server capacities 85
table of 85
server features 88–91
1002rp (T1/SMDI) 91
1005r 89
1006r 90
202i 88
600r 89
server operating system 28
server space requirements 94
Simple Network Management Protocol 39
simplified message desk interface (SMDI) 33, 55
single-point ground 19, 98
SL-100 ..... 23, 33, 55
SMDI 55
SNMP Network Managers 39
software resources, CS, CSE 1000 54
CallPilot usage and 54
Speech Recognition parameters 83
table of 83
SPG. See single-point ground 19
storage calculation assumptions 84
storage hour parameters 84
table of 84
storage requirements 68
Switch channel connectivity hardware 68
switch software requirements 48
Meridian 1 48
system sizing 69
customer requirements 69

T

T1 links 33, 55
T1/SMDI 33
traffic capacity tables 103
training 9

U

Unified Messaging 39
UPS power 42

V

voice channels and voice mail system 78
provisioning 78
voice mail system and voice channels 78
provisioning 78
Voice Profile for Internet Mail 39
voice traffic parameters 78
table of 78
VPIM networking 39

W

warnings 17
field maintenance 17
Web messaging 60
Web server hard drive 27
space requirement 27
Web server, My CallPilot with VBK 40
Web-based applications 27

X

X21 software features 48