IP Office Essential Edition

PARTNER Version Installation Manual

- Issue 1c - (09 April 2010)

© 2010 AVAYA All Rights Reserved.

Notices
While reasonable efforts have been made to ensure that the information in this document is complete and accurate at the time of printing, Avaya assumes no liability for any errors. Avaya reserves the right to make changes and corrections to the information in this document without the obligation to notify any person or organization of such changes.

Documentation disclaimer
Avaya shall not be responsible for any modifications, additions, or deletions to the original published version of this documentation unless such modifications, additions, or deletions were performed by Avaya.

End User agree to indemnify and hold harmless Avaya, Avaya's agents, servants and employees against all claims, lawsuits, demands and judgments arising out of, or in connection with, subsequent modifications, additions or deletions to this documentation, to the extent made by End User.

Link disclaimer
Avaya is not responsible for the contents or reliability of any linked Web sites referenced within this site or documentation(s) provided by Avaya. Avaya is not responsible for the accuracy of any information, statement or content provided on these sites and does not necessarily endorse the products, services, or information described or offered within them. Avaya does not guarantee that these links will work all the time and has no control over the availability of the linked pages.

Warranty
Avaya provides a limited warranty on this product. Refer to your sales agreement to establish the terms of the limited warranty. In addition, Avaya's standard warranty language, as well as information regarding support for this product, while under warranty, is available to Avaya customers and other parties through the Avaya Support Web site: http://www.avaya.com/support. Please note that if you acquired the product from an authorized Avaya reseller outside of the United States and Canada, the warranty is provided to you by said Avaya reseller and not by Avaya.

Licenses
THE SOFTWARE LICENSE TERMS AVAILABLE ON THE AVAYA WEBSITE, HTTP://SUPPORT.AVAYA.COM/LICENSEINFO/ ARE APPLICABLE TO ANYONE WHO DOWNLOADS, USES AND/OR INSTALLS AVAYA SOFTWARE, PURCHASED FROM AVAYA INC., ANY AVAYA AFFILIATE, OR AN AUTHORIZED AVAYA RESELLER (AS APPLICABLE) UNDER A COMMERCIAL AGREEMENT WITH AVAYA OR AN AUTHORIZED AVAYA RESELLER. UNLESS OTHERWISE AGREED TO BY AVAYA IN WRITING, AVAYA DOES NOT EXTEND THIS LICENSE IF THE SOFTWARE WAS OBTAINED FROM ANYONE OTHER THAN AVAYA, AN AVAYA AFFILIATE OR AN AVAYA AUTHORIZED RESELLER, AND AVAYA RESERVES THE RIGHT TO TAKE LEGAL ACTION AGAINST YOU AND ANYONE ELSE USING OR SELLING THE SOFTWARE WITHOUT A LICENSE. BY INSTALLING, DOWNLOADING OR USING THE SOFTWARE, OR AUTHORIZING OTHERS TO DO SO, YOU, ON BEHALF OF YOURSELF AND THE ENTITY FOR WHOM YOU ARE INSTALLING, DOWNLOADING OR USING THE SOFTWARE (HEREINAFTER REFERRED TO INTERCHANGEABLY AS "YOU" AND "END USER"), AGREE TO THESE TERMS AND CONDITIONS AND CREATE A BINDING CONTRACT BETWEEN YOU AND AVAYA INC. OR THE APPLICABLE AVAYA AFFILIATE ("AVAYA").

Avaya grants End User a license within the scope of the license types described below. The applicable number of licenses and units of capacity for which the license is granted will be one (1), unless a different number of licenses or units of capacity is specified in the Documentation or other materials available to End User. "Designated Processor" means a single stand-alone computing device. "Server" means a Designated Processor that hosts a software application to be accessed by multiple users. "Software" means the computer programs in object code, originally licensed by Avaya and ultimately utilized by End User, whether as stand-alone products or pre-installed on Hardware. "Hardware" means the standard hardware originally sold by Avaya and ultimately utilized by End User.

License types
Designated System(s) License (DS). End User may install and use each copy of the Software on only one Designated Processor, unless a different number of Designated Processors is indicated in the Documentation or other materials available to End User. Avaya may require the Designated Processor(s) to be identified by type, serial number, feature key, location or other specific designation, or to be provided by End User to Avaya through electronic means established by Avaya specifically for this purpose.

Copyright
Except where expressly stated otherwise, no use should be made of materials on this site, the Documentation(s) and Product(s) provided by Avaya. All content on this site, the documentation(s) and the product(s) provided by Avaya including the selection, arrangement and design of the content is owned either by Avaya or its licensors and is protected by copyright and other intellectual property laws including the sui generis rights relating to the protection of databases. You may not modify, copy, reproduce, republish, upload, post, transmit or distribute in any way any content, in whole or in part, including any code and software. Unauthorized reproduction, transmission, dissemination, storage, and or use without the express written consent of Avaya can be a criminal, as well as a civil, offense under the applicable law.

Third Party Components
Certain software programs or portions thereof included in the Product may contain software distributed under third party agreements ("Third Party Components"), which may contain terms that expand or limit rights to use certain portions of the Product ("Third Party Terms"). Information regarding distributed Linux OS source code (for those Products that have distributed the Linux OS source code), and identifying the copyright holders of the Third Party Components and the Third Party Terms that apply to them is available on the Avaya Support Web site: http://support.avaya.com/Copyright.

Preventing toll fraud
"Toll fraud" is the unauthorized use of your telecommunications system by an unauthorized party (for example, a person who is not a corporate employee, agent, subcontractor, or is not working on your company's behalf). Be aware that there can be a risk of toll fraud associated with your system and that, if toll fraud occurs, it can result in substantial additional charges for your telecommunications services.

Avaya fraud intervention
If you suspect that you are being victimized by toll fraud and you need technical assistance or support, call Technical Service Center Toll Fraud Intervention Hotline at +1-800-643-2353 for the United States and Canada. For additional support telephone numbers, see the Avaya Support Web site: http://support.avaya.com
Suspected security vulnerabilities with Avaya products should be reported to Avaya by sending mail to: securityalerts@avaya.com.

Trademarks
Avaya and Aura are trademarks of Avaya, Inc.
The trademarks, logos and service marks ("Marks") displayed in this site, the documentation(s) and product(s) provided by Avaya are the registered or unregistered Marks of Avaya, its affiliates, or other third parties. Users are not permitted to use such Marks without prior written consent from Avaya or such third party which may own the Mark. Nothing contained in this site, the documentation(s) and product(s) should be construed as granting, by implication, estoppel, or otherwise, any license or right in and to the Marks without the express written permission of Avaya or the applicable third party. Avaya is a registered trademark of Avaya Inc. All non-Avaya trademarks are the property of their respective owners.

Downloading documents
For the most current versions of documentation, see the Avaya Support Web site: http://www.avaya.com/support

Contact Avaya Support
Avaya provides a telephone number for you to use to report problems or to ask questions about your product. The support telephone number is 1-800-242-2121 in the United States. For additional support telephone numbers, see the Avaya Web site: http://www.avaya.com/support

Contents

1. System Overview

1.1 System Components ... 8
1.2 Features Summary ... 10
1.3 System Capacity/Planning Rules ... 11
1.4 SD Cards ... 12
1.5 Base Cards ... 13
1.6 Trunk Cards ... 15
1.7 External Expansion Module ... 16
1.8 Supported Phones ... 17
1.9 Cabling and Cables ... 18
1.10 Emergency and Power Failure Ports ... 20
1.11 Out of Building Connections ... 21
1.11.1 DS Phones ... 22
1.11.2 Analog Phone Barrier Box ... 23
1.11.3 Rack Mounting Barrier Boxes ... 24

2. Installation Requirements

2.1 Environmental Requirements ... 26
2.2 Space Requirements ... 27
2.2.1 IP500 and IP500 V2 Control Units ... 28
2.2.2 IP500 Expansion Modules ... 28
2.2.3 Wall Mounting ... 29
2.2.4 Rack Space Requirements ... 30

3. IP Office Administration Software

3.1 Installing the Admin Applications ... 33
3.2 Installer PC Connection ... 35
3.3 Starting Manager ... 36
3.4 Starting System Status ... 37
3.5 Starting Monitor ... 38

4. Installation

4.1 Tools and Parts Required ... 40
4.2 Read the Documentation ... 41
4.3 Unpacking ... 42
4.4 SD Card Preparation ... 43
4.4.1 Upgrade the Card Firmware ... 43
4.4.2 Adding a License File ... 43
4.4.3 Adding a Pre-Built Configuration File ... 44
4.5 IP500 Card Installation ... 45
4.5.1 IP500 Daughter Card Preparation ... 46
4.5.2 IP500 Card Insertion ... 47
4.6 Wall Mounting ... 48
4.7 Rack Mounting ... 50
4.8 Connecting an External Expansion Modules ... 52
4.9 Grounding ... 54
4.10 Starting the System ... 55
4.11 Checking the LEDs ... 56
4.12 Connecting Phones ... 57

5. Additional Processes

5.1 Adding Licences ... 61
5.2 Changing Passwords ... 62
5.3 Switching Off an IP Office System ... 63
5.4 Rebooting an IP Office System ... 64
5.5 Memory Card Removal ... 65
5.6 Upgrading the IP Office Software ... 66
5.6.1 Using the Upgrade Wizard ... 67
5.6.2 Using an SD Card ... 69
5.7 Out of Building Telephone Installations (COPY) ... 70
5.7.1 DS Phones ... 71
5.7.2 Analog Phone Barrier Box ... 72
5.7.3 Rack Mounting Barrier Boxes ... 73
5.8 Using the External Output Port ... 74
5.8.1 Port Connection ... 74
5.9 Reset Button ... 75
5.10 AUX Button ... 75

6. SD Card Management

6.1 Booting from the SD Cards ... 81
6.2 Creating an IP Office SD Card ... 82
6.3 Viewing the Card Contents ... 83
6.4 Backing Up the System SD Card ... 84
6.4.1 Backing Up the Primary Folder ... 84
6.4.2 Restore from the Backup Folder ... 85
6.4.3 Backing Up to the Optional Card ... 86
6.4.4 Restoring from the Optional Card ... 87
6.5 Upgrading Card Software ... 89
6.5.1 Upgrading Remotely Using Manager ... 90
6.5.2 Upgrading the SD Card Locally ... 90
6.5.3 Upgrading Using an Optional SD Card ... 91
6.6 Removing SD Cards ... 92
6.6.1 Card Shutdown ... 92
6.6.2 Card Startup ... 93
6.6.3 System Shutdown ... 93

7. System Component Details

7.1 Control Unit ... 96
7.2 SD Card ... 98
7.3 Base Cards ... 99
7.3.1 Analog Phone ... 101
7.3.2 Digital Station ... 102
7.3.3 ETR6 Card ... 103
7.3.4 ATM Combination Card ... 105
7.4 Trunk Cards ... 106
7.4.1 Analog Trunk Card ... 107
7.4.2 PRI Trunk Cards ... 108
7.5 Expansion Modules ... 109
7.5.1 Digital Station ... 110
7.5.2 Phone Module ... 112
7.6 Mounting Kits ... 114
7.6.1 IP500 Wall Mounting Kit ... 114
7.6.2 IP500 Rack Mounting Kit ... 114
7.6.3 Barrier Box Rack Mounting Kit ... 114
7.7 Telephones ... 115
7.7.1 1403 ... 116
7.7.2 1408 ... 117
7.7.3 1416 ... 118
7.7.4 ETR6/ETR6D ... 119
7.7.5 ETR18/ETR18D ... 120
7.7.6 ETR34/ETR34D ... 122
7.7.7 3910 ... 123
7.7.8 3920 ... 123
7.7.9 Phone Add-Ons ... 124
7.8 Licences ... 125

7.9 Physical Ports 126
7.9.1 ANALOG Port 127
7.9.2 Audio Port 127
7.9.3 DC I/P Port 127
7.9.4 DS Ports 127
7.9.5 EF Port 128
7.9.6 ETR Port 128
7.9.7 Expansion Port 128
7.9.8 EXT O/P Port 128
7.9.9 LAN Port 129
7.9.10 PF Port 130
7.9.11 Phone (POT) Port 130
7.9.12 PRI Port 131
7.9.13 RS232 DTE Port 132

8. Safety Statements

8.1 Lightning Protection/Hazard Symbols 136
8.2 Trunk Interface Modules 137
8.3 Further Information and Product Updates 137
8.4 Compliance with FCC Rules 137
8.5 Port Safety Classification 138
8.6 EMC Directive 138
8.7 Regulatory Instructions for Use 139
8.7.1 Canada 139
8.7.2 FCC Notification 139
Index 141

Chapter 1.
System Overview

1. System Overview

Avaya IP Office Essential Edition - PARTNER® Version is a special operating mode of the Avaya IP Office telephone system. It provides key and lamp operation similar to Avaya's PARTNER ACS product and is supported on IP Office IP500 systems in North America.

This document covers the installation of the hardware supported by IP Office when used in this mode of operation.

IP Office Technical Bulletins

Ensure that you have obtained and read the IP Office Technical Bulletin relating to the software release which you are installing. This bulletin will contain important information that may not have been included in the manual. IP Office Technical Bulletins are available from the Avaya support website http://support.avaya.com.

Additional Manuals

The following additional manuals are available:

- *IP Office Release 6.0 Product Description*
  Covers the features provided by IP Office Essential Edition - PARTNER® Version.
- *IP Office Essential Edition - PARTNER® Version Quick Installation Guide*
  Covers an out of the box installation of a system with analog trunks only and no additional configuration.
- *IP Office Essential Edition - PARTNER® Version Installation Manual*
  Covers the equipment supported and the installation of that equipment.
- *IP Office Essential Edition - PARTNER® Version Manager*
  Covers the system programming that can be performed using the IP Office Manager application.
- *IP Office Essential Edition - PARTNER® Version Phone Based Administration Manual*
  Covers the range of system programming that can performed from extensions 10 and 11 when fitted with 1400 Series phone (1408 and 1416) and ETR phone (ETR18D and ETR34D) extensions.
- *IP Office Essential Edition - PARTNER® Version Phone User Guide*
  Covers actions, including personal programming, that users can do from 1400 Series phone (1408 and 1416) and ETR phone (ETR18D and ETR34D) extensions.

Websites

- Avaya Support (*http://support.avaya.com*)
  Contains documentation and other support materials for Avaya products including IP Office. Copies of the IP Office CD images are available from this site and updated core software .bin files.
- Avaya IP Office Knowledge Base (*http://marketingtools.avaya.com/knowledgebase*)
  Access to an on-line regularly updated version of the IP Office Knowledge Base.

1.1 System Components

The following are typical components of an IP Office Essential Edition - PARTNER® Version system.

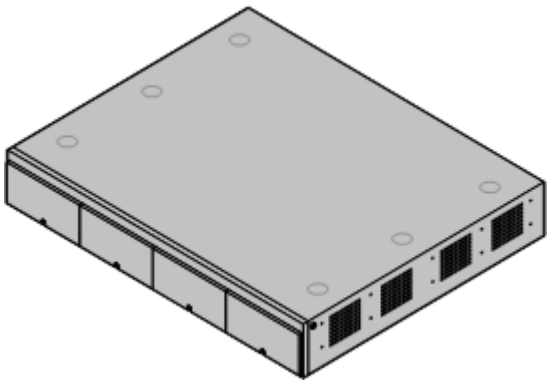

- IP Office IP500 V2 Control Unit
  The control unit holds the main configuration and performs the routing and switching for telephone calls and data traffic. The control unit includes 4 slots for optional base cards to support trunk and phone extension ports.
  - Avaya System SD Card
    This card is used to hold system files and provide voicemail. The card has a unique serial number which is is used to validate license keys entered into the system's configuration. The card is mandatory for correct system operation.
  - Power Cord
    The control unit is not supplied with a power cord. An IEC60320 C13 type earthed power cord is required.

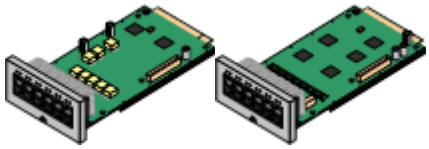

- IP500 Base Cards
  The IP500 control unit has slots for up to 4 IP500 base cards. These can be used to add analog, ETR and digital phone extension ports.
  - IP500 Digital Station 8 Base Card *(Maximum 3)*
    Each card supports up to 8 1400 series phones.
  - IP500 Analog Phone 2/Phone 8 Base Cards *(Maximum 4)*
    Each card supports 2 or 8 analog phones.
  - IP500 ETR6 Base Card *(Maximum 3)*
    Each card supports up to 6 ETR phones (only 2 ETR34 or ETR34D phones).

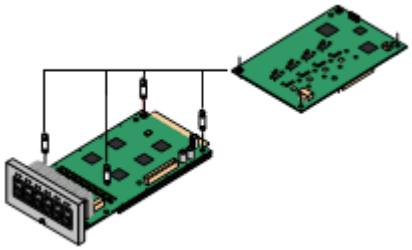

- IP500 Trunk Daughter Cards
  The IP500 base cards can be fitted with an IP500 trunk daughter card in order to support trunk connections.
  - IP500 Analog Trunk Card *(Maximum 4)*
    This card provides 4 analog trunk connections.
  - IP500 PRI Trunk Card *(Maximum 1)*
    This card provides a single PRI/T1 trunk connection.

- IP500 ATM Combination Cards *(Maximum 2)*
  This card is a pre-paired base and daughter card. It provides 6 digital station ports, 2 analog phone ports, 10 VCM channels and 4 analog trunk ports. The trunk daughter card cannot be removed or replaced with another type.
  - VCM channels are required for support of SIP trunks. This is the only type of card that provides VCM channels for IP Office Essential Edition - PARTNER® Version.

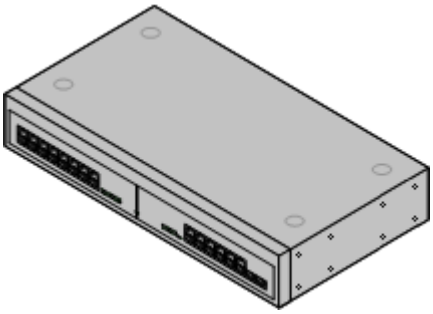

- IP500 External Expansion Module
  One external expansion module can be added.
  - IP500 Phone 16 Expansion Module
    This type of external module adds support for 16 additional analog phone extensions.
  - IP500 Digital Station 16 Expansion Module
    This type of external module adds support for 16 additional ports for 1400 Series phones.
- Power Cord
  The external expansion modules include an external power supply unit but do not include a mains power cord. An IEC60320 C13 type earthed power cord is required.

- Cables
  The IP Office is designed primarily for connection to a structured cabling system using CAT3 UTP cabling. This approach allows telephone and data traffic to share the same wiring infrastructure and simplifies equipment moves.

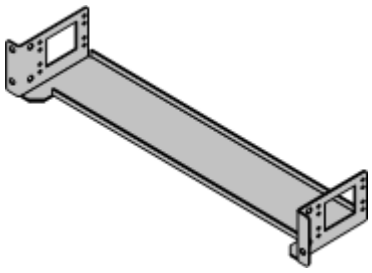

- Mounting Kits
  The control unit can be used free-standing, with external expansion modules stacked above it. However mounting kits exist to allow alternate installation methods.
  - Wall Mounting Kit
    With an optional wall mounting kit the control unit can be wall mounted. However it cannot support any external expansion modules when wall mounted.
  - Rack Mounting Kit
    With optional rack mounting kits, the control unit and external expansion modules can also be rack mounted.

- Surge Protectors and Barrier Boxes
  Where the installation includes extensions in other buildings additional protective equipment is required. This equipment may also be required in areas where the lightning risk is high.

- Phones
  The following phones are supported on IP Office Essential Edition - PARTNER® Version systems:
  - ACS "Refreshed" Series
    ETR6D, ETR18D, ETR34D, 3910 and 3920.
  - ACS "Euro" Series
    ETR6, ETR18, ETR18D, ETR34D.
  - 1400 Series
    1403, 1403SW, 1408, 1416.
  - Analog Phones

- Application DVDs
  The IP Office applications can be ordered on a number of DVDs. In addition they can be downloaded from the IP Office section of the Avaya support web site *(http://support.avaya.com)*.

1.2 Features Summary

The following features are supported:

- Up to 48 extensions port. Extension types can be a mix of analog, digital and ETR.
  - Analog DTMF phones are supported. Due to the wide range of such phones, it is the installers responsibility to validate the operation of any specific analog phone with the IP Office system before installing them on a customer system.
  - IP Office digital station (DS) extension ports support Avaya 1400 Series phones.
  - IP Office ETR extension ports support Avaya PARTNER ETR phones.
- Up to 56 lines using a combination of analog, T1/PRI and SIP trunks.
  - Up to 12 analog trunks.
  - Up to 24 channels using a single PRI trunk connection.
  - Up to 20 SIP channels using SIP trunks. 3 channels are supported without licenses, additional channels require the addition of licenses.
- Key System Functionality
  - The first two buttons on phones are fixed as intercom buttons for internal call functions.
  - For systems with analog trunks, by default the first 5 analog trunks are assigned to line buttons. Additional lines including non-analog can be assigned by the system maintainer.
  - Buttons not assigned as intercom or line buttons can be set to other functions by the system maintainer or by system users.
- System maintenance
  - Users with a suitable phone (1408, 1416, ETR18D or ETR34D) can performs a range of personal programming tasks.
  - The users on extensions 10 and 11 can perform system programming tasks in addition to personal programming.
  - IP Office Manager supports a dedicated IP Office Essential Edition - PARTNER® Version system programming mode to allow programming from a PC.
- Embedded voicemail
  - Mailboxes enabled by default for all users.
  - Up to 15 hours message storage in total. Maximum message length 3 minutes.
  - Single auto attendant support for incoming calls.
- Station Metering Detail Reporting (SMDR) output from the IP Office to an IP enabled call logger.
- 64-Party conferencing supports for multiple conferences totalling up to 64 conference parties.
- Loudspeaker connection via an analog extension port connection. This port can then be paged directly or in conjunction with paging to a hunt group.
- Port for external music on hold source connection.
- External switch control port for connection of up to 2 door relay controls or similar.

1.3 System Capacity/Planning Rules

Maximum Component Capacities

Component	Maximum	
IP500 Base Cards	4	Description
IP500 Phone 8 Base Card	4	Provides ports for 8 analog phone extension.
IP500 Phone 2 Base Card	4	Provides ports for 2 analog phone extensions.
IP500 Digital Station 8 Base Card	3	Provides ports for 8 1400 Series phone extensions.
IP500 ETR6 Base Card	3	Provides ports for 6 ETR phone extensions.
IP500 ATM Combination Card	2	Provides ports for 6 1400 Series phone extensions and 4 analog trunks.
IP Office 500 Daughter Cards	4	
IP500 Analog Trunk Daughter Card	3	Supports 4 analog trunks.
IP500 PRI 1 Trunk Daughter Card	1	Supports a single PRI/T1 trunk connection.
IP Office 500 External Expansion Modules	1	
IP500 Phone 16	1	Provides ports for 16 analog phone extensions.
IP500 Digital Station 16	1	Provides ports for 16 1400 Series phone extensions.

Maximum System Capacity

Extensions	Maximum	
	48	
1400 Series Phones	46	3 x DS8 Base Cards, 1 x ATM Combination Card and 1 x Digital Station 16 External Expansion Module.
ETR Phones	18	3 x ETR6 Base Cards.
Analog Phones	48	4 x Phone 8 Base Cards.
Trunks	56	
Analog Trunks	12	Using any combination of IP500 ATM4 Trunk Daughter cards mounted on the IP500 base cards or up to 2 IP500 ATM Combination Cards.
T1 Channels	24	1 x IP500 PRI Trunk Daughter Card mounted on one of the IP500 base cards.
PRI Channels	23	
SIP Trunk Channels	20	3 Channels are supported without licenses. Additional channels must be licensed.

Notes

While base cards can be installed in any slot and daughter cards added to any base card, the following should be considered when planning the installation.

- The first two extensions (extensions 10 and 11) provided by slot 1 of the control unit are used as system administrator extensions if a card providing digital station or ETR ports is fitted. If a card supporting only analog extension ports is fitted in the first slot, system administration can only be done using the IP Office Manager application.
- While the IP500 Analog Trunk Daughter card can be fitted to any IP500 base card, when fitted to an IP500 Phone 8 Base Card the combination provides additional power fail ports.

1.4 SD Cards

The system control unit has two SD card slots; labeled System SD and Optional SD.

An Avaya IP Office PARTNER SD card is required in the System slot at all times. This card is used for critical system file storage. It is also has a unique serial number which for the generation and validation of feature licenses used by the system. This card is also used for the storage of prompts, greetings and messages by the voicemail system.

The Optional SD card slot can be used with any SD card meeting the specification below. The card in this slot can be used for a number of maintenance processes.

- SDHC minimum 4GB FAT32 format (Single partition, SDHC, class2+, FAT32, SPI & SD bus).

SD Card Removal

SD cards should never be removed while being used. Though the SD card slot LEDs indicate when data is being written to an SD card, lack of flashing LED is not a sufficient safeguard. The IP Office Manager provides methods to shutdown and restart an individual card or to shutdown the system in order to allow removal of an SD card. If the System SD card is removed, licensed features will continue operating for up to 2 hours.

1.5 Base Cards

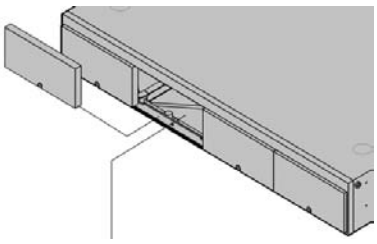

The control unit has 4 slots for the insertion of base cards. The slots are numbered 1 to 4 from left to right. Normally they can be used in any order, however if the capacity for a particular type of card is exceeded, the card in the rightmost slot will be disabled.

Each base card includes an integral front panel with ports for cable connections. Typically the first 8 ports on the left are for connection of extension devices. The 4 ports on the left are used for connection of trunks if a trunk daughter card is added to the base card.

IP500 Digital Station Base Card

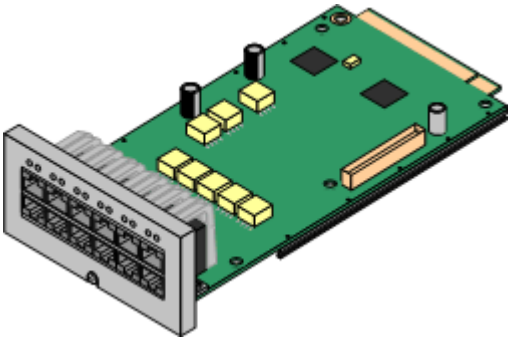

This card provides 8 DS (digital station) ports for the connection of Avaya digital phones other than IP phones.

- The card can be fitted with an IP500 trunk daughter card which uses the base card ports for trunk connection.
- Maximum: 3 per control unit.
- 4400 Series phones (4406D, 4412D and 4424D) are not supported on this card. They are supported on an external expansion module.

IP500 Analog Phone Base Card

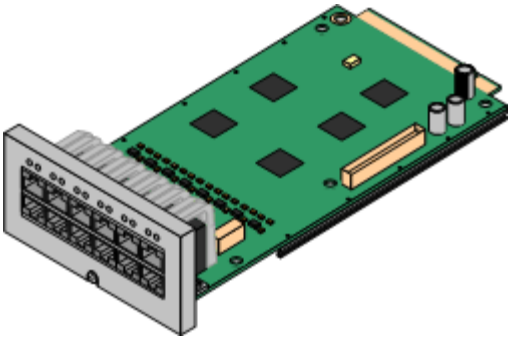

The card is available in two variants, supporting either 2 or 8 analog phone ports.

- The card can be fitted with an IP500 trunk daughter card which uses the base card ports for trunk connection.
- Maximum: 4 per control unit.
- The analog phone ports do not include a ringing capacitor. Where this is a requirement, connection should be via a Master socket containing ringing capacitors.
- If fitted with an IP500 Analog Trunk daughter card, during power failure phone port 8 is connected to analog trunk port 12.

IP500 ATM Combination Card

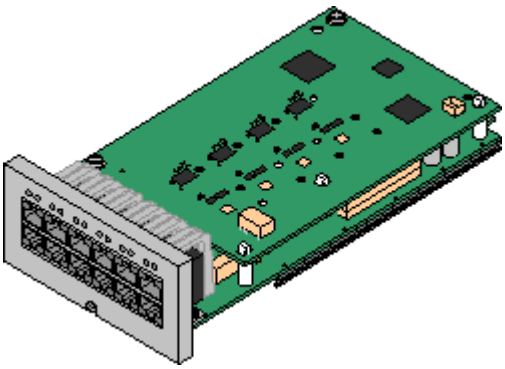

This card provides 6 digital station ports (1-6), 2 analog extension ports (7-8) and 4 analog trunk ports (9-12). The card also includes 10 VCM channels.

- This card has a pre-installed IP500 analog trunk daughter card.
- Maximum: 2 combination cards per IP500 V2 control unit. Not supported by IP500 control units.
- The analog phone ports do not include a ringing capacitor. Where this is a requirement, connection should be via a Master socket containing ringing capacitors.
- If fitted with an IP500 Analog Trunk daughter card, during power failure phone port 8 is connected to analog trunk port 12.

IP500 ETR6 Base Card

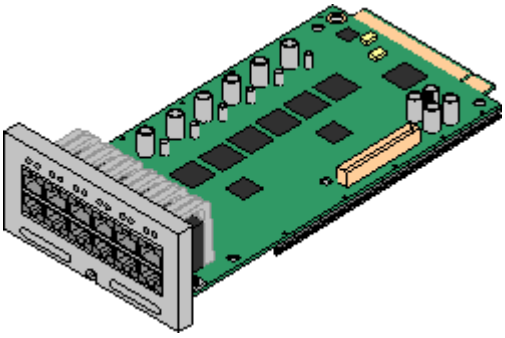

This card provides 6 ETR ports for connection of ETR phones. 2 Analog extension ports are also provided for emergency use only with an analog trunk card.

- The card can be fitted with an IP500 trunk daughter card which uses the base card ports for trunk connection.
- Maximum: 3 per IP500 V2 control unit. Not supported by IP500 control units.
- The analog phone ports do not include a ringing capacitor. Where this is a requirement, connection should be via a Master socket containing ringing capacitors.
- If fitted with an IP500 Analog Trunk daughter card, during power failure phone ports 7 and 8 are connected to analog trunk port 12. However during normal operation analog phone ports 7 and 8 are not useable.

1.6 Trunk Cards

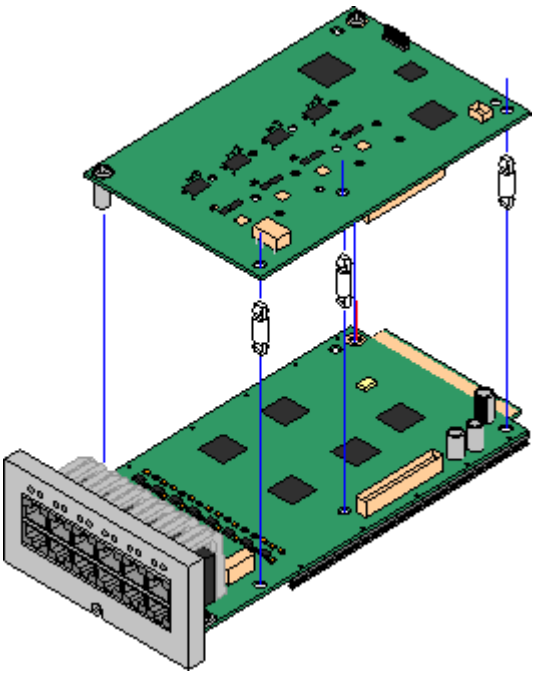

The IP500 base cards can be fitted with an IP500 daughter cards to support the connection of trunks to the base card.

Each daughter card is supplied with the stand off pillars required for installation and a label to identify the daughter cards presence on the front of the base card after installation.

- IP500 Combination cards are pre-fitted with a trunk daughter card which cannot be removed or changed for another type of trunk daughter card.

IP500 Analog Trunk Daughter Card

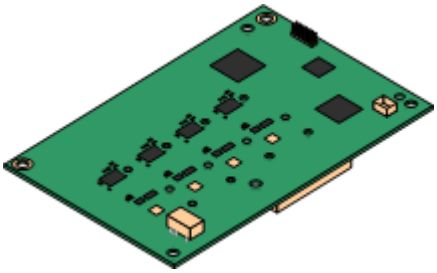

This card allows the base card to support 4 analog loop-start trunks.

- The analog phone ports do not include a ringing capacitor. Where this is a requirement, connection should be via a Master socket containing ringing capacitors.
- If fitted with an IP500 Analog Trunk daughter card, during power failure phone port 8 is connected to analog trunk port 12.
- Maximum: 3 per IP500 control unit.

IP500 PRI-U Trunk Daughter Card

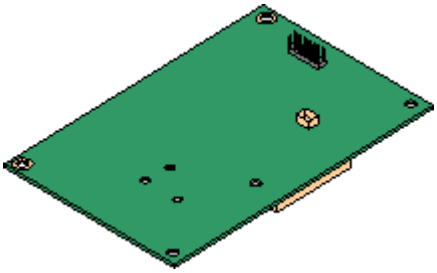

This card allows the base card to support 1 PRI trunk connections. The card is available in single and dual port variants. The card can be configured for T1 robbed bit or T1 PRI.

- Maximum: 1 per IP500 control unit.

1.7 External Expansion Module

An external expansion module can be used to add extra ports to the system. Only one external expansion unit is supported.

- The external expansion module is supplied with a blue 1 meter (3'3'') expansion interconnect cable. This cable must be used when connecting to expansion ports on the rear of a control unit.

Each module uses an external power supply unit supplied with the module. A locale specific power cord for the PSU must be ordered separately. Both types of module use an IEC60320 C13 type earthed power cord.

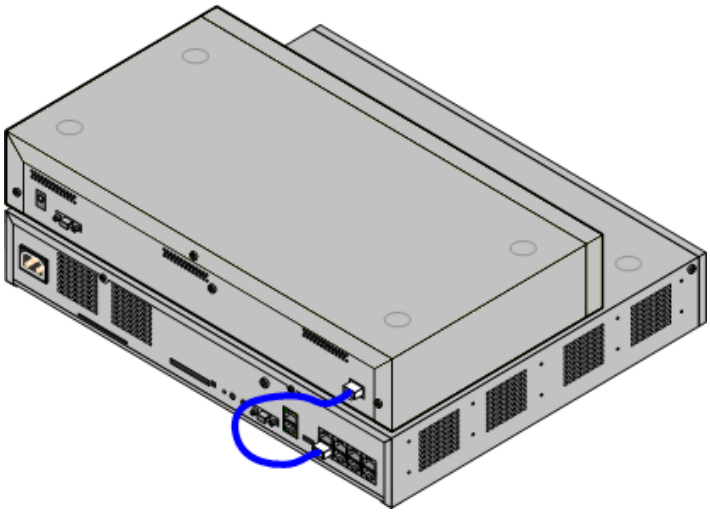

- IP500 Digital Station 16 Module
  Provides an additional 16 DS ports for 1400 Series phones.

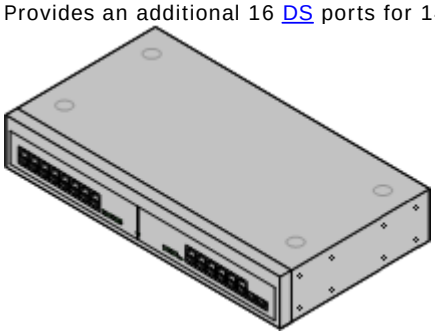

- IP500 Phone 16 Module
  Provides an additional 16 PHONE ports for analog phones.

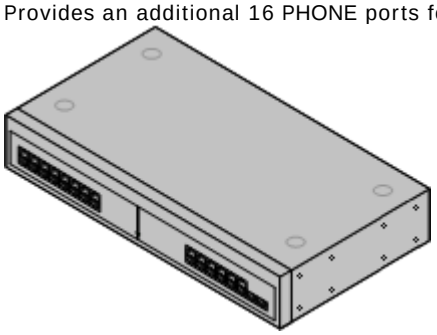

1.8 Supported Phones

The following phones are supported on IP Office Essential Edition - PARTNER® Version systems:

Telephones	Port Type	Intercom Button	Programmable Buttons		Total Buttons	Display	Handsfree	Aux Port	User/ System Prog
			...with lights	... without lights					
ACS "Refreshed" Series									
ETR6D	ETR	2	4	–	6	Yes	Yes	–	–
ETR18D	ETR	2	16	4	22	Yes	Yes	Yes	Yes
ETR34D	ETR	2	32	4	38	Yes	Yes	Yes	Yes
3910	ETR	2	–	6		Yes	Yes	–	–
3920	ETR	2	–	6		Yes	Yes	–	–
ACS "Euro" Series Phones									
ETR6	ETR	2	4	-	6	No	Yes	–	–
ETR18	ETR	2	16	4	22	No	Yes	Yes	–
ETR18D	ETR	2	16	4	22	Yes	Yes	Yes	Yes
ETR34D	ETR	2	32	4	38	Yes	Yes	–	Yes
1400 Series Phones									
1403/1403SW	DS	2	1	–	3	Yes	Yes	–	–
1408	DS	2	6	–	8	Yes	Yes	–	Yes
1416	DS	2	14	–	16	Yes	Yes	–	Yes

- Analog Phones: Any analog phones to be used with the system should be tested and validated by the installer before use.

Notes

1. ETR34 phones are limited to 2 per IP500 ETR6 base card and a maximum of 4 per system.
2. The ETR phones support attachment of an additional analog phone via the ETR phones Aux socket. Such analog phones operate with the same extension number as the ETR extension to which they are attached.
3. The 1416 can be used with DBM32 button modules to provide additional programmable buttons. Up to 3 DBM32 button modules can attached to a 1416.
4. The 3910 and 3920 are single handset DECT systems. The handset base station attaches to an analog port.

1.9 Cabling and Cables

The system is designed primarily for use within an RJ45 structured cabling system using CAT3 unshielded twisted-pair (UTP) cabling and RJ45 sockets.

A structured cabling system is one where cables are run from a central RJ45 patch panel in the communications/data room to individual RJ45 sockets at user's desk. All wires in each cable between the patch panel and the desk socket are connected straight through. This arrangement allows devices connected at the patch panel to be swapped to match the type of device that needs to be connected at the user socket. For example, making one user socket a phone port and another user socket a computer LAN port, without requiring any rewiring of the cables in between.

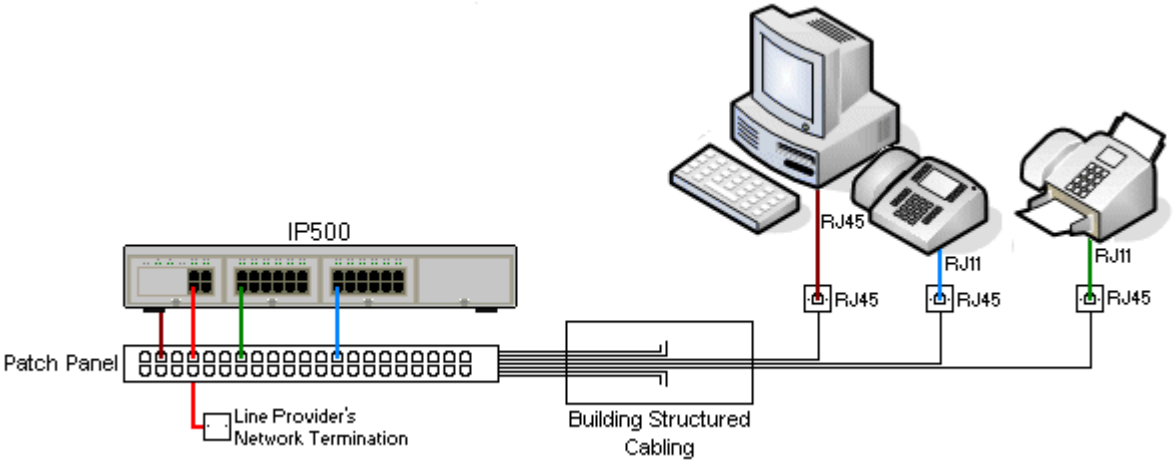

- Traditional IDC Punchdown Wiring Installations
  Where necessary, the far end RJ45 plug can be stripped from IP Office cables and wired into traditional wiring systems using punch-block connectors. This type of installation should be performed by an experienced wiring technician.
- Trunk Connections
  The majority of IP Office trunk ports use RJ45 connectors for acceptance of an RJ45-to-RJ45 cable. However, connection at the line providers end may require use of a different plug type in order to match the line providers equipment.
- RJ11 Phone Connectors
  Many phones use RJ11 sockets and are supplied with RJ11-to-RJ11 cables. RJ11 plugs can be inserted into RJ45 sockets and in many case the connection will work. However this is not recommended or supported as the connection lock is not truly positive and may become disconnected. An RJ45-to-RJ11 cable should be used for these connections.

Standard IP Office Cables

The following are Avaya standard cables available for use with IP Office systems. The maximum length is applicable if the standard Avaya cable is replaced with an alternative cable.

Cable	Description	Part number	Standard Length	Maximum Length
9-Way DTE Cable	Connects to control unit RS232 DTE port. 9-Way D-type plug to 9-way D-type socket.	–	2m/6'6''.	2m/6'6''.
Structured Cabling DS Line Cable	Connects from RJ45 sockets to RJ11 socketed digital station and analog phones.	700047871	4m/13'2''.	See table below.
PRI Trunk Cable	Connects PRI trunk ports to the line providers network termination point. RJ45 to RJ45. Red.	700213440	3m/9'10''.	–
Expansion Interconnect Cable	Connects the control unit to expansion module. RJ45 to RJ45. Blue.	700213457	1m/3'3''.	1m/3'3''.
LAN Cable	Connects from IP Office LAN ports to IP devices. RJ45 to RJ45. Grey.	700213481	3m/9'10''.	100m/328'.

The table below details the maximum total cable distances for DS and analog extensions using different cable types.

Telephone	Unshielded Twisted-Pair (UTP) - 50nf/Km			CW1308
	AWG22 (0.65mm)	AWG24 (0.5mm)	AWG26 (0.4mm)	
1400 Series	1000m/3280'.	1000m/3280'.	400m/1310'.	400m/1310'.
ETR	1000m/3280'.	1000m/3280'.	400m/1310'.	–
Analog Phones	1000m/3280'.	1000m/ 3280'.	400m/1640'.	800m/2620'.

1.10 Emergency and Power Failure Ports

IP Office systems can provide 2 types of analog extension power failure ports. These are:

Type	Description	Provided By:
Switching Power Failure Ports	During normal IP Office operation these ports can be used for normal analog phone connection. During power failure the port is directly connected to an analog trunk port.	• IP500 Analog Phone 8 Card When an IP500 Analog Phone 8 base card is fitted with an IP500 Analog Trunk daughter card, during power failure extension port 8 is connected to analog trunk port 12. • IP500 ATM Combination Card On this card, during power failure, extension port 8 is connected to analog trunk port 12.
Emergency Only Power Failure Ports	During normal IP Office operation these ports cannot be used. During power failure the port is directly connected to an analog trunk port.	• IP500 Analog Trunk Daughter Card Regardless of the IP500 card hosting it, during power failure pins 4 and 5 of port 12 are connected to pins 7 and 8. • IP500 ETR6 Card On this card, during normal operation extension ports 7 and 8 are not useable. However, if the card is fitted with an IP500 Analog Trunk daughter card, during power failure extension ports 7 and 8 are connected to analog trunk port 12.

In all cases these only work with loop-start analog trunks. Any phones connected to these ports should be clearly labeled as power fail extensions in accordance with the appropriate national and local regulatory requirements.

1.11 Out of Building Connections

The following are the only supported scenarios in which wired extensions and devices outside the main building can be connected to the IP Office Essential Edition - PARTNER® Version system. In these scenarios, additional protection, in the form of protective grounding and surge protectors, must be fitted.

⚠ The fitting of additional protection does not remove the risk of damage. It merely reduces the chances of damage.

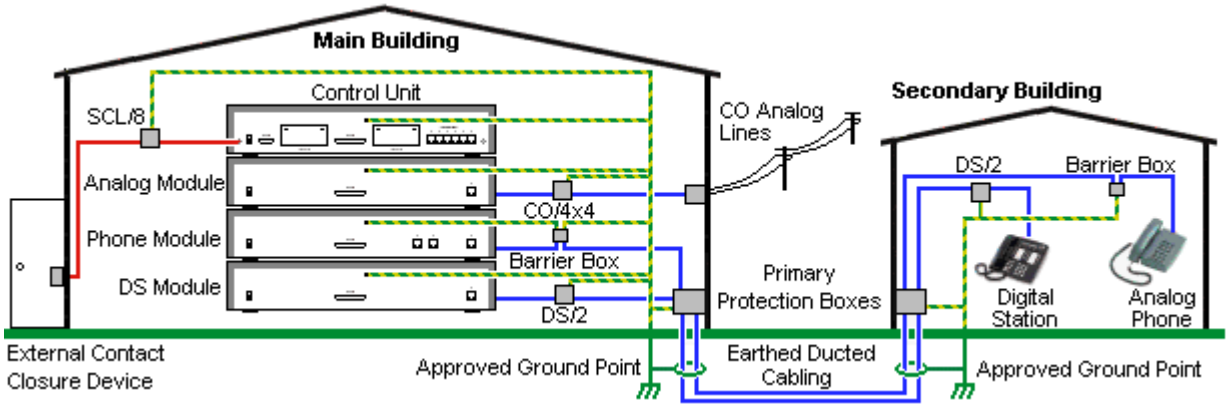

Cabling Requirements

- Cables of different types, for example trunk lines, extensions, ground and power connections, should be kept separate.
- All cabling between building should be enclosed in grounded ducting. Ideally this ducting should be buried.
- A Primary Protection Box must be provided at the point where the cables enter the building. This should be three point protection (tip, ring and ground). Typically this would be gas tube protection provided by the local telephone company. The ground wire must be thick enough to handle all the lines being affected by indirect strike at the same time.

Connection Type	Protection Device Type	Requirement
DS Phone Extensions ⚠ Digital Station Expansion module DS ports only.	ITWLinx towerMAX DS/2 Supports up to 4 connections. (This device was previously referred to as the Avaya 146E).	• Connection from the expansion module to the phone must be via a surge protector at each end and via the primary protection point in each building. • The IP Office expansion module and control unit and IROB devices must be connected to the protective ground point in their building. • The between building connection must be via earthed ducting, preferable underground. The cable must not be exposed externally at any point.
Analog Phone Extensions ⚠ Phones Expansion module (POT or PHONE) ports only.	IP Office Barrier Box Supports a single connection. Maximum of 16 on any expansion module.	
Analog Trunks	ITWLinx towerMAX CO/4x4 Supports up to 4 two-wire lines. (This device was previously referred to as the Avaya 146C).	For locations where the risk of lightning strikes is felt to be high, additional protection of incoming analog trunks is recommended.
External Output Switch	ITWLinx towerMAX SCL/8 (This device was previously referred to as the Avaya 146G)	Connections from an IP Office Ext O/P port to an external relay device must be via a surge protector.

* The towerMAX range of devices are supplied by ITWLinx (http://www.itwlinx.com).

1.11.1 DS Phones

When digital phone extensions are required in another building, additional In-Range Out-Of-Building (IROB) protective equipment must be used. For phones connected to IP Office DS ports, the supported device supplied by ITWLinx is a towerMAX DS/2* module. This IROB device was previous badged by Avaya as the 146E IROB.

The protection device should be installed as per the instructions supplied with the device. The ground points on the IP Office control unit and the DS modules must be connected to a protective ground using 18AWG wire with a green and yellow sleeve.

Typically the IROB

2 RJ45 EQUIPMENT ports are straight through connected to the 2 RJ45 LINE ports. This allows existing RJ45 structured cabling, using pins 4 and 5, to be used without rewiring for up to two DS connection. However each of these ports can be used to connect a second extension using pins 3 and 6.

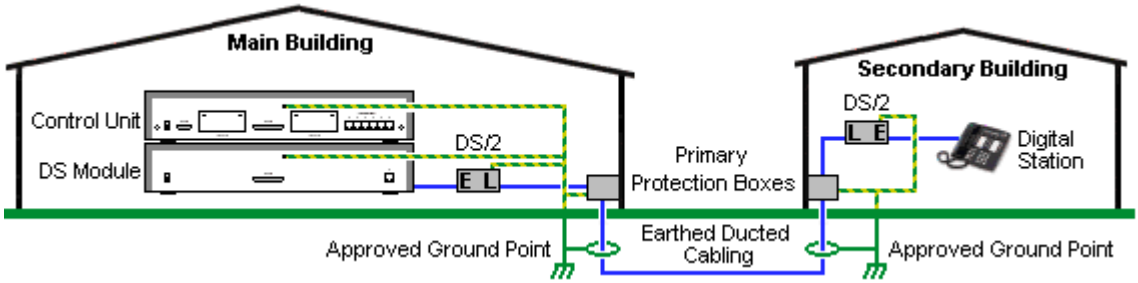

LINE		Signal		EQUIPMENT	
RJ45 8 1	1	Not used.	Ground, LINE, EQUIPMENT	1	RJ45 8 1
	2	Not used.		2	
	3	Ring II (Optional)		3	
	4	Ring I		4	
	5	Tip I		5	
	6	Tip II (Optional)		6	
	7	Not used.		7	
	8	Not used.		8	

* The towerMAX range of devices are supplied by ITWLinx (http://www.itwlinx.com).

1.11.2 Analog Phone Barrier Box

Where analog phone extensions are required in another building, additional protective equipment must be used, in the form of IP Office Phone Barrier Boxes and protective earth connections.

- The correct IP Office specific barrier boxes must be used. These modules have been designed specifically for the signalling voltages used by the IP Office Essential Edition - PARTNER® Version system:
  - Only the IP Office Phone Barrier Box V2 should be used.
  - No other type of analog phone barrier box should be used.
- Where more than 3 barrier boxes are required in a building, they must be rack mounted using a Barrier Box rack mounting kit.
- A maximum of 16 barrier boxes can be used with any Phone module.
- CAUTION: PHONE (POT) ports on the front of control units must not be used for extensions that are external to the main building.

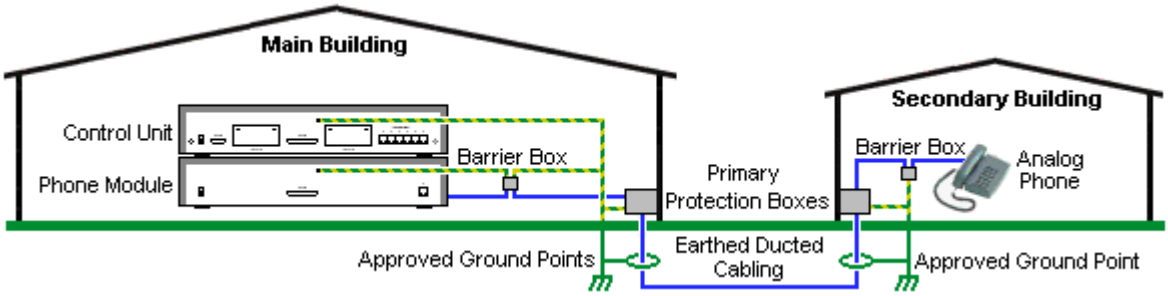

Main Building	Barrier Box	Secondary Building
• RJ11: Connect to PHONE (POT) port on the Phone module using cable supplied with the barrier box. • RJ45: Connect to the secondary building barrier box via primary protection in both buildings.	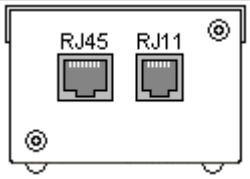	• RJ11: Connect to analog phone. Cable not supplied. • RJ45: From main building via primary protection in both buildings.
• Center Screw: Connect to main building protective ground (or ground terminal of Barrier Box Rack Mounting Kit). Use 18AWG (minimum) wire with a green and yellow sleeve. • Right-Hand Screw: Connect to ground point on Phone module using ground cable supplied with barrier box.	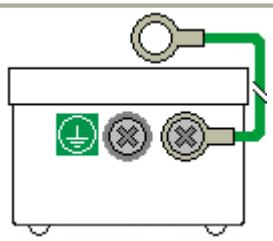	• Center Screw: Connect to main building protective ground. Use 18AWG (minimum) wire with a green and yellow sleeve. • Right-Hand Screw: Not used.

Wires from external telephone going directly to the barrier boxes must be kept apart, that is not routed in the same bundle:

IP Office Barrier Boxes		Part number
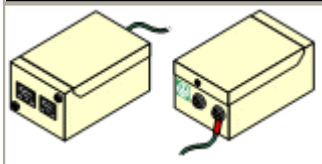	IP Office 500 Phone Barrier Box (81V) Use with Phone V1 module. Includes an RJ45 to RJ11 cable and a functional earth lead.	700293897
	IP Office 500 Phone Barrier Box V2 (101V) Use with Phone V2 module. Includes an RJ45 to RJ11 cable and a functional earth lead.	700385495
	Barrier Box Rack Mounting Kit	700293905

1.11.3 Rack Mounting Barrier Boxes

Where more than 3 Phone Barrier Boxes are used they must be rack mounted. The Barrier Box Rack Mounting Kit (Part number 700293905) supports up to 8 Phone Barrier Boxes.

1. Unscrew the two screws arranged diagonally at the front of each barrier box and use these same screws to reattach the barrier box to the rack mounting strip.
2. Each barrier box is supplied with a solid green ground wire connected to its functional ground screw. Remove and discard this wire. Connect a green/yellow ground wire to the protective earth screw in the center of the Point on the back of the Barrier Box.

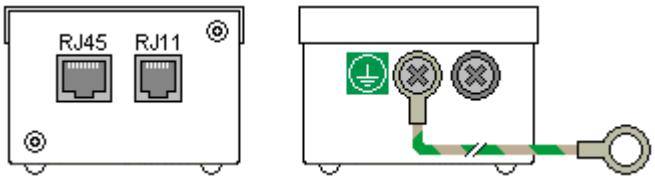

3. The rack mounting strip has threaded M4 earthing pillars. Connect the free end of the barrier box ground wire, using M4 washers and nuts, to the earthing pillar on that side of the rack mounting strip.

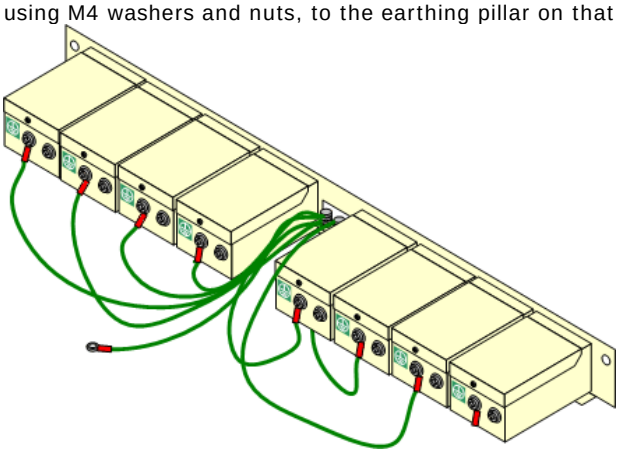

4. Using 14AWG wire with green and yellow sleeve, connect one of the earthing pillars to the buildings protective earth.
5. Using 14AWG wire with green and yellow sleeve, connect the other earthing pillar to the Phone module.
6. Ensure that the following wires are not routed together in the same bundle:
   - Earth lead from the barrier box to the Phone 8/16/32.
   - Internal wires, e.g. wires going directly to the Phone 8/16/32.
   - Wires from external telephone going directly to the barrier boxes.

Chapter 2.
Installation Requirements

2. Installation Requirements

2.1 Environmental Requirements

The planned location must meet the following requirements. If being installed into a rack system, these are requirements for within the rack:

1. ☐ Temperature: 0°C to 40°C / 32°F to 104°F.
2. ☐ Humidity: 10% to 95% non-condensing.
3. ☐ Check there are no flammable materials in the area.
4. ☐ Check there is no possibility of flooding.
5. ☐ Check that no other machinery or equipment needs to be moved first.
6. ☐ Check that it is not an excessively dusty atmosphere.
7. ☐ Check that the area is unlikely to suffer rapid changes in temperature and humidity.
8. ☐ Check for the proximity of strong magnetic fields, sources of radio frequency and other electrical interference.
9. ☐ Check there are no corrosive chemicals or gasses.
10. ☐ Check there is no excessive vibration or potential of excessive vibration, especially of any mounting surface.
11. ☐ Check that where telephones are installed in another building, that the appropriate protectors and protective grounds are fitted (see Out of Building Telephone Installation).
12. ☐ Check there is suitable lighting for installation, system programming and future maintenance.
13. ☐ Check that there is sufficient working space for installation and future maintenance.
14. ☐ Ensure that likely activities near the system will not cause any problems, e.g. access to and maintenance of any other equipment in the area.
15. ☐ Where ventilation holes are present on any of the IP Office units, those holes should not be covered or blocked.
16. ☐ The surface must be flat horizontal for free-standing or rack mounted installations.

Wall Mounting

In additional to the requirements above, the following are applicable to IP Office units that support wall mounting.

1. Units must only be mounted onto permanent wall surfaces.
2. The surface must be vertical and flat.
3. Orientation of the unit must be as shown in the section on IP500 Wall Mounting.
4. The appropriate Avaya wall mounting kits must be used.

IMPORTANT SAFETY INSTRUCTIONS

When using your telephone equipment, basic safety precautions should always be followed to reduce the risk of fire, electric shock and injury to persons, including the following:

1. Do not use this product near water, for example, near a bath tub, wash bowl, kitchen sink or laundry tub, in a wet basement or near a swimming pool.
2. Avoid using a telephone (other than a cordless type) during an electrical storm. There may be a remote risk of electric shock from lightning.
3. Do not use the telephone to report a gas leak in the vicinity of the leak.
4. Use only the power cord and batteries indicated in this manual.

2.2 Space Requirements

IP Office control units and modules are designed to be installed either in a free-standing stack or into a 19" rack system. Rack installation requires a rack mounting kit for each control unit and expansion module.

If being used without any external expansion modules, the IP500 and IP500 V2 control units can be wall mounted using a wall mounting kit.

- Cable Clearance
  Clearance must be provided at the front and rear of all modules for cable access and feature key dongle connection. Allow a minimum clearance of 90mm (3.5 inches).
- Additional Clearance
  Care should be taken to ensure that the positioning of the modules does not interrupt air flow and other factors that may affect environmental requirements. This is especially important on IP500 and IP500 V2 control units which have ventilation slots at the side.
- Cable Access
  Power cords must not be attached to the building surface or run through walls, ceilings, floors and similar openings. Installation measures must be taken to prevent physical damage to the power supply cord, including proper routing of the power supply cord and provision of a socket outlet near the fixed equipment or positioning of the equipment near a socket outlet.

2.2.1 IP500 and IP500 V2 Control Units

When wall mounted, a clearance of 500mm is required on all sides. The ventilation slots on the rear and sides should not be covered or blocked.

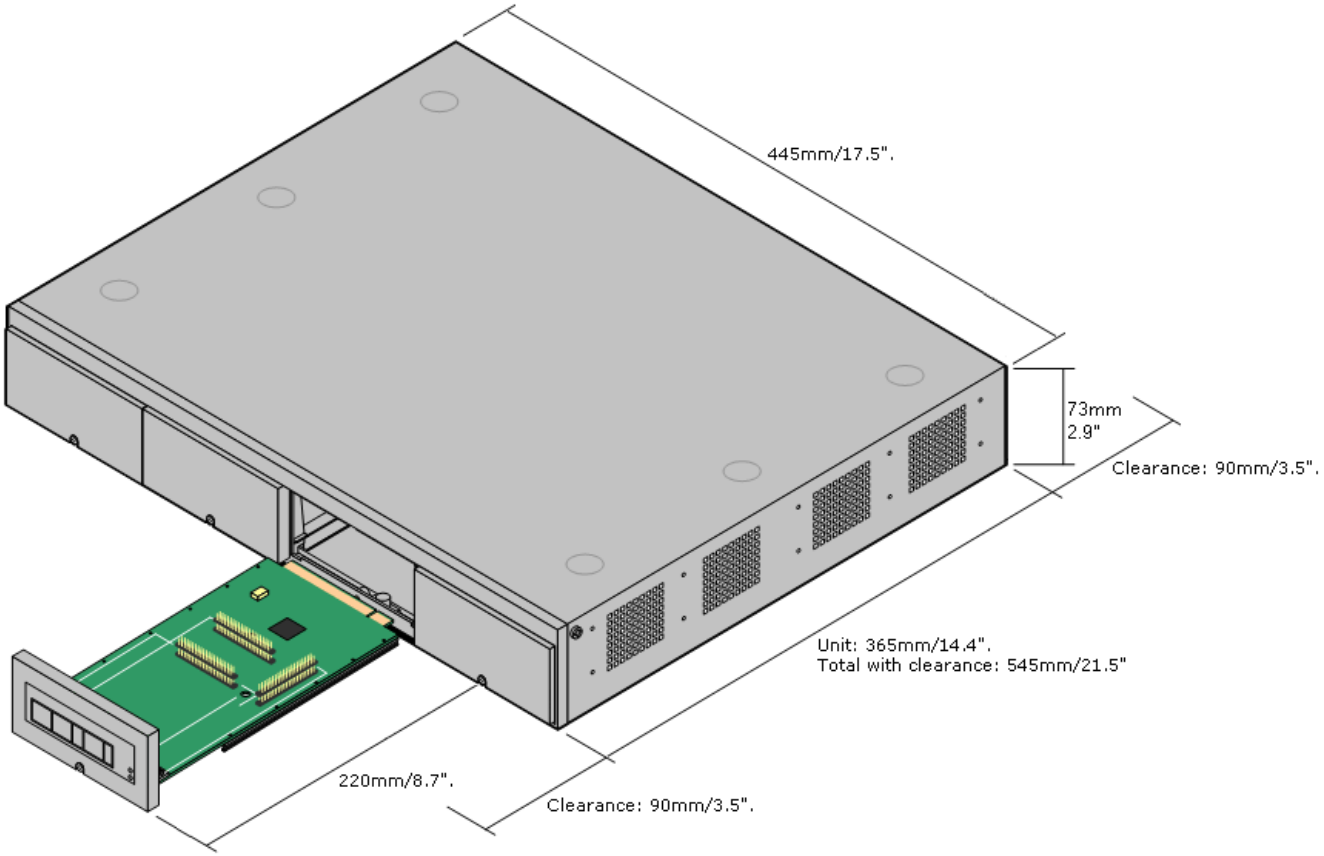

2.2.2 IP500 Expansion Modules

The dimensions below are applicable to all IP500 external expansion modules.

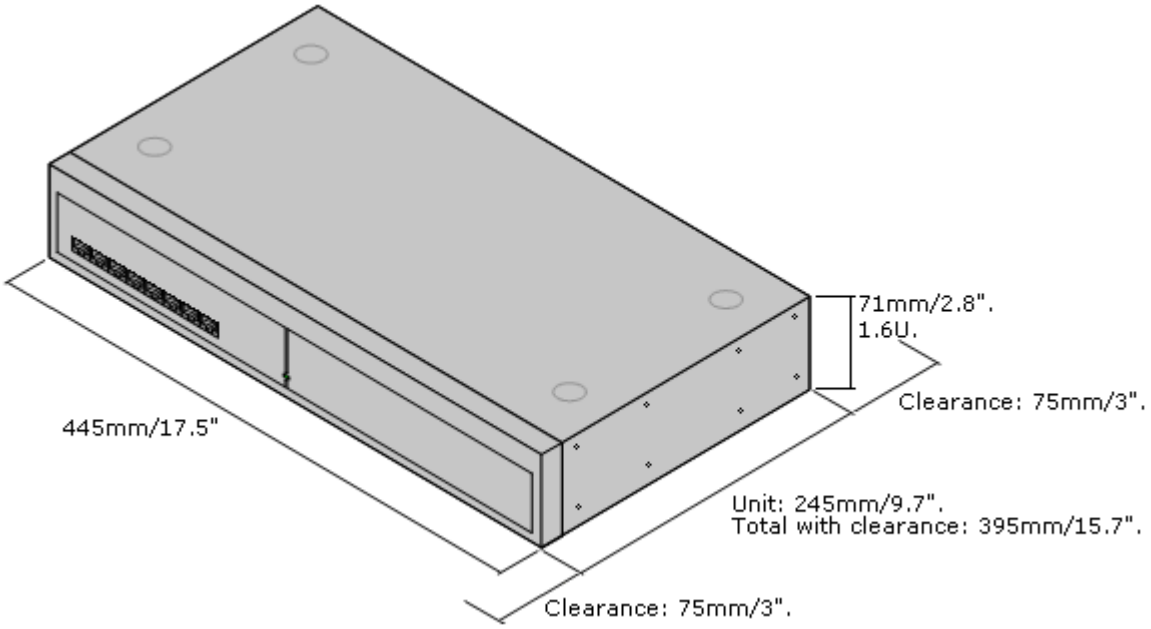

2.2.3 Wall Mounting

IP500 and IP500 V2 control units can be wall mounted if not using any external expansion modules. An IP500 wall mounting kit is required in addition to suitable wall fixings.

- IP500 Wall Mounting Kit *(SAP Code 700430150)*
  This kit must be used when wall mounting an IP500 or IP500 V2 control unit. Additional 4.5mm fixings suitable for the wall type are required. A clearance of 500mm around the control unit is required.

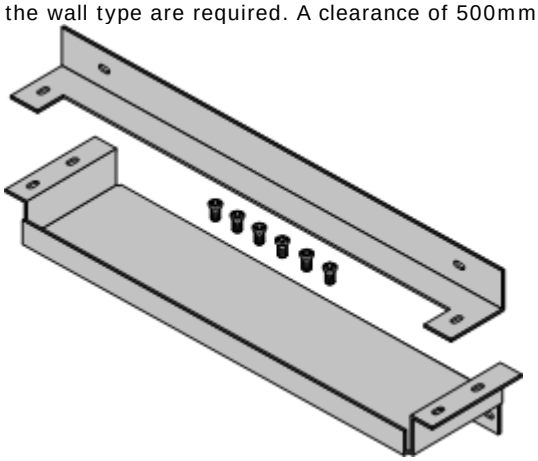

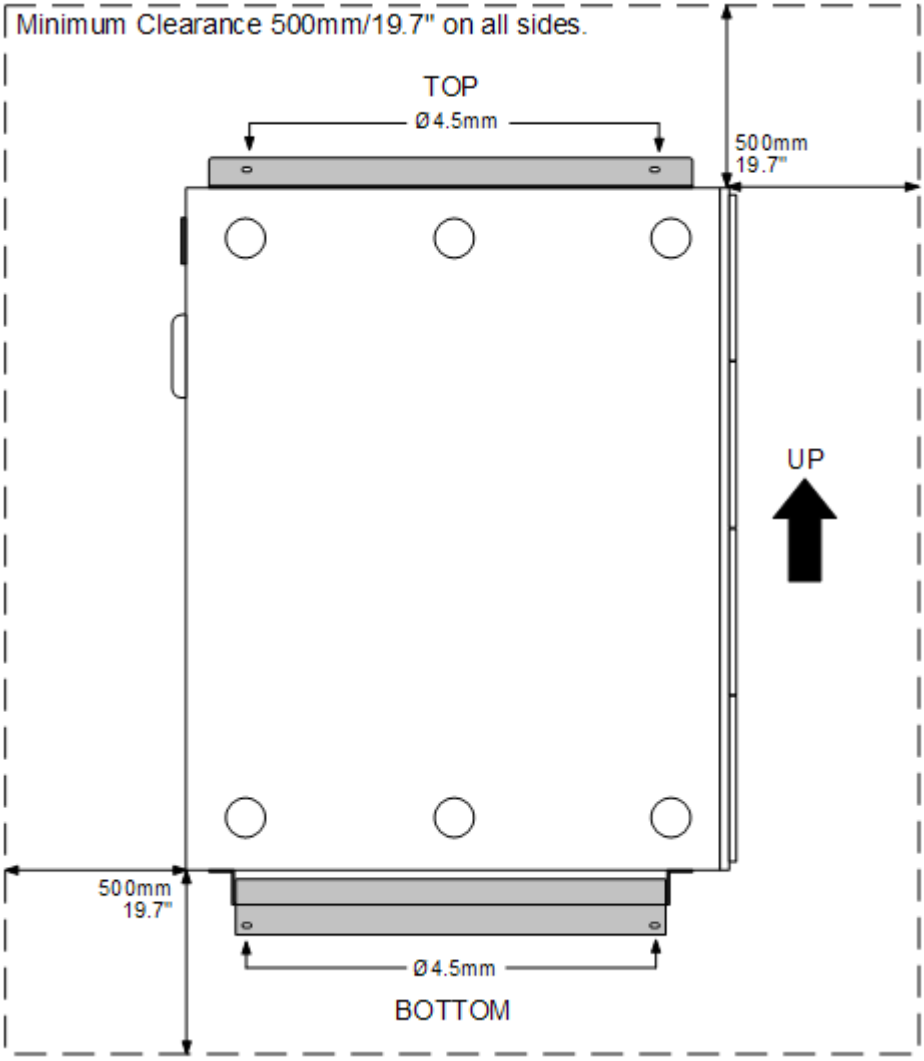

2.2.4 Rack Space Requirements

All IP Office control units and external expansion modules can be rack mounted into standard 19" rack systems. Each unit requires a 2U slot space within the rack. Rack mounting requires an IP500 rack mounting kit for each control unit and external expansion module.

Where IP Office systems are being rack mounted, the effect of conditions within the rack cabinet must be considered. For example the rack temperature may be above the room temperature and airflow within the rack will be restricted. The environmental requirements for the individual IP Office units are still applicable inside the rack cabinet.

IP500 Rack Mounting Kit

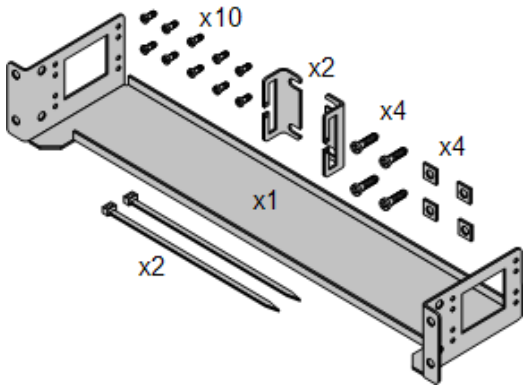

- IP500 Rack Mounting Kit *(SAP 700429202)*
  This kit contains all the components required for the rack mounting of a single IP500 V2 control unit, IP500 control unit or IP500 external expansion module. This includes screws for fixing of the brackets to the module, bolts for securing the module in the rack and cable tidy brackets.

Barrier Box Rack Mounting Kit

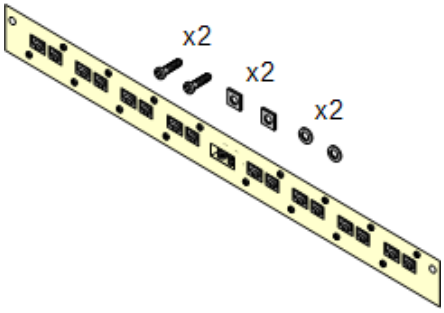

- Barrier Box Rack Mounting Kit *(SAP 700293905)*
  Barrier boxes must be used for out-of-building analog phone extensions. This bracket allows up to 8 IP Office barrier boxes to be rack mounted and simplifies the number of connections to the protective ground point in the rack. This kit must be used when more than 3 barrier boxes are in use and supports a maximum of 16 barrier boxes for a single external expansion module.

Chapter 3.

IP Office Administration Software

3. IP Office Administration Software

In order to install an IP Office system you must be familiar with using the following IP Office applications. They must be available on your installation PC.

Application	Description
Manager	IP Office Manager is used to access all parts of the IP Office configuration. Different levels of access can be defined to control which parts of the configuration Manager user can view and alter. Manager is also used to upgrade the software files used by an IP Office system.
System Status	The IP Office System Status application (SSA) is a reporting tool that provides a wide range of information about the current status of an IP Office system. Its can report the available resources and components within the system and details of calls in progress. Details of the number of alarms are recorded and the time date of the most recent alarms. When required for diagnostics escalation, SSA is able to take a snap shot image of the IP Office system's status including a copy of its current configuration. Use of SSA requires an IP Office service user name and password that has been configured for System Status access in the IP Office's security settings.
Monitor	IP Office Monitor (also know as System Monitor) is a tool that can show all activity on the IP Office system in great detail. As a consequence, interpretation of Monitor traces requires a high-level of data and telephony protocol knowledge. However, all IP Office installers and maintainers must understand how to run Monitor when necessary as Avaya may request copies of Monitor traces to resolve support issues.

3.1 Installing the Admin Applications

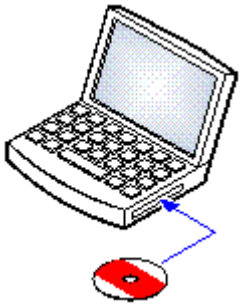

The IP Office Administration suite consists of a number of applications for IP Office installers and maintainers.

- ☐ System Monitor - *Install* ✓
- ☐ Manager - *Install* ✓
- ☐ System Status Application - *Install* ✓
- ☐ Previous System Monitor - *Optional*
  This version of System Monitor is only required if you need to monitor the functioning of IP Offices running pre-IP Office 4.0 software.

Requirements

- ☐ < %APPSDVD% >
  Alternatively the IP Office Administrator Applications suite can be downloaded from Avaya's support website *(http://support.avaya.com)*.
- ☐ Windows PC Requirements
  This should meet the requirements of the administrator applications being installed. The specification below are the minimum requirements for IP Office Manager. If other applications are to be installed on the PC then their individual requirements should also be meet.

Requirement	Minimum	Recommended
Processor	600MHz Pentium or AMD Opteron, AMD Athlon64, AMD Athlon XP.	800MHz Pentium or AMD Opteron, AMD Athlon64, AMD Athlon XP.
RAM	128MB	256MB
HD Space	1GB - 800MB for .NET2, 200MB for Manager.	1.4GB - 800MB for .NET2, 600MB for the full IP Office Admin suite.
Display	800 x 600 - 256 Colors	1024 x 768 - 16-bit High Color
Operating System	Windows XP Pro, Windows Vista, Windows 7, Windows 2003 and Windows 2008. • 32-bit and 64-bit versions are supported. • Vista support is only on Business, Enterprise and Ultimate versions. • Windows 7 support is only on Professional, Enterprise and Ultimate versions.	

Installing the IP Office Admin Applications

1. Using the Add or Remove Programs option in the Windows Control Panel, check that the PC does not already have a version of the IP Office Admin suite installed.
   - If 'yes' and the suite is a pre-IP Office 3.2 version, remove the existing IP Office Admin suite via Add/Remove Programs.
   - If the existing suite is IP Office 3.2 or higher, it is possible to upgrade without removing the previous installation. However, if the system already has a USB Feature Key, the key should be removed prior to upgrading and then reinserted and the PC restarted.
2. Insert the IP Office Administrator Applications DVD. Select the option for the IP Office Administration Suit. A folder window will display the installation files for the administration suite.
3. Double-click on setup.exe.
4. Select the language you want to use for the installation process. This does not affect the language used by Manager when running. Click Next >.
5. Select who should be able to run the Admin Suite applications. Click Next >.
6. If required select the destination to which the applications should be installed. We recommend that you accept the default destination. Click Next >.
7. The next screen is used to select which applications in the suite should be installed. Clicking on each will display a description of the application. Click on the icon next to each application to change the installation selection. When you have selected the installations required, click Next >.

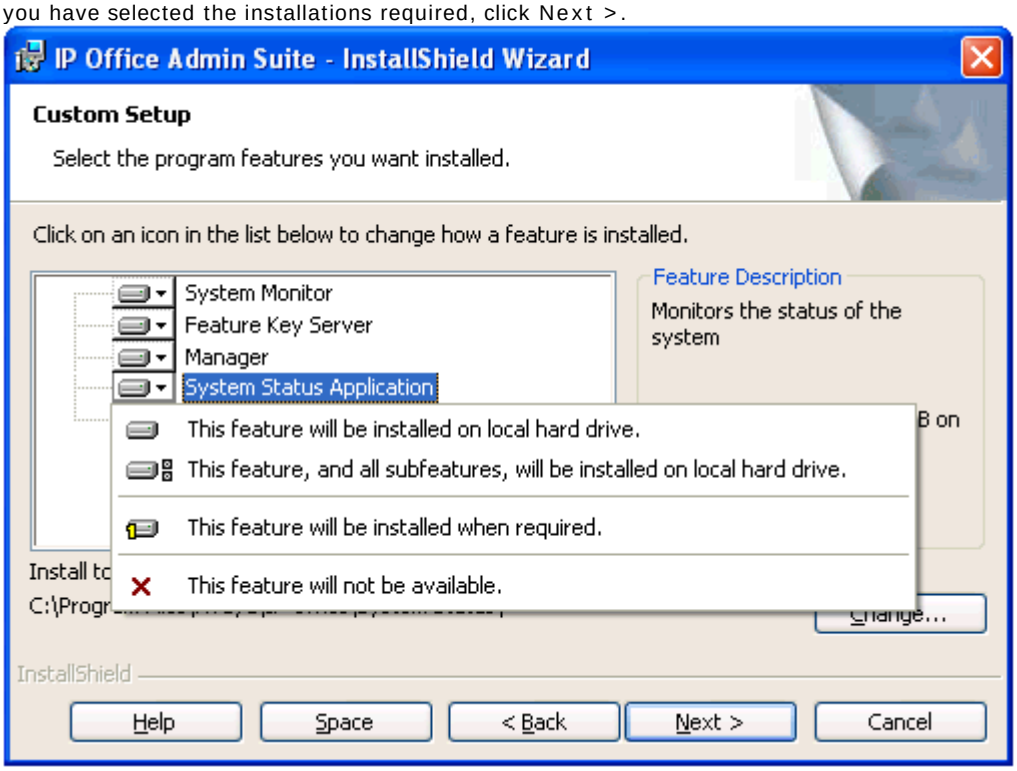

8. Ensure that at minimum System Monitor and Manager are selected. Click Next >.
9. Click Install.
10. Installation of Windows .Net2 components may be required. If dialogs for this appear, follow the prompts to install .Net.
11. If requested, reboot the PC.

3.2 Installer PC Connection

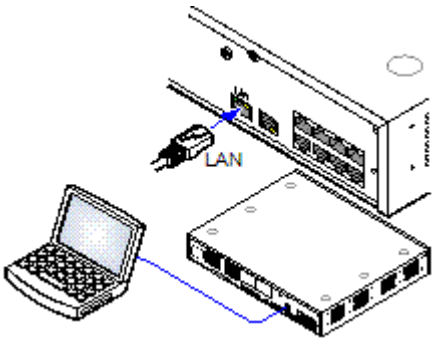

This section covers connecting your installation PC directly to the IP Office control unit. If the control unit is powered up while attached to a network with a DHCP server, it will request and use an IP address from the network.

Requirements

- ☐ IP Office Administration PC
  A Windows PC with the IP Office Administrator Application suite installed.
- ☐ LAN Cable

Direct Connection to a Defaulted IP Office Control Unit

1. The default address for an IP Office control unit LAN port is 192.168.42.1/255.255.255.0.
2. Connect the LAN cable from the PCs LAN port the LAN port on the IP Office control unit.
3. Check that the orange LED lamp on the IP Office LAN port is on. The green LED may also be flickering as it indicates traffic across the LAN connection.
4. You can now start Manager, System Status or System Monitor.

3.3 Starting Manager

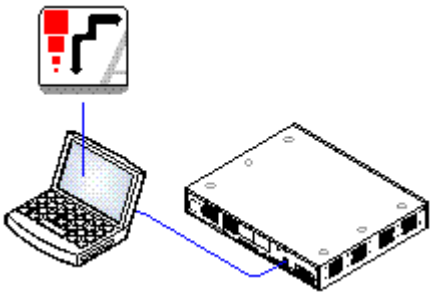

IP Office Manager is used to access all parts of the IP Office configuration. Different levels of access can be defined to control which parts of the configuration Manager user can view and alter. Manager is also used to upgrade the software files used by an IP Office system.

Requirements

- ☐ IP Office Administration PC
  A Windows PC with the IP Office Administrator Application suite installed.
- ☐ LAN Cable

1. Select Start | Programs | IP Office | Manager.
2. If the PC has firewall software installed, you may be prompted as to whether you want to allow this program to access the network. Select Yes or OK.
3. By default, when Manager is started it will automatically scan the network for IP Office systems. If this does not happen select File | Open Configuration from the menu bar.
4. If only one IP Office system is detected, Manager will attempt to login to that system. If no IP Office system or multiple systems are detected, the Select IP Office window appears. The default name used for a newly installed IP Office control unit is its MAC address.

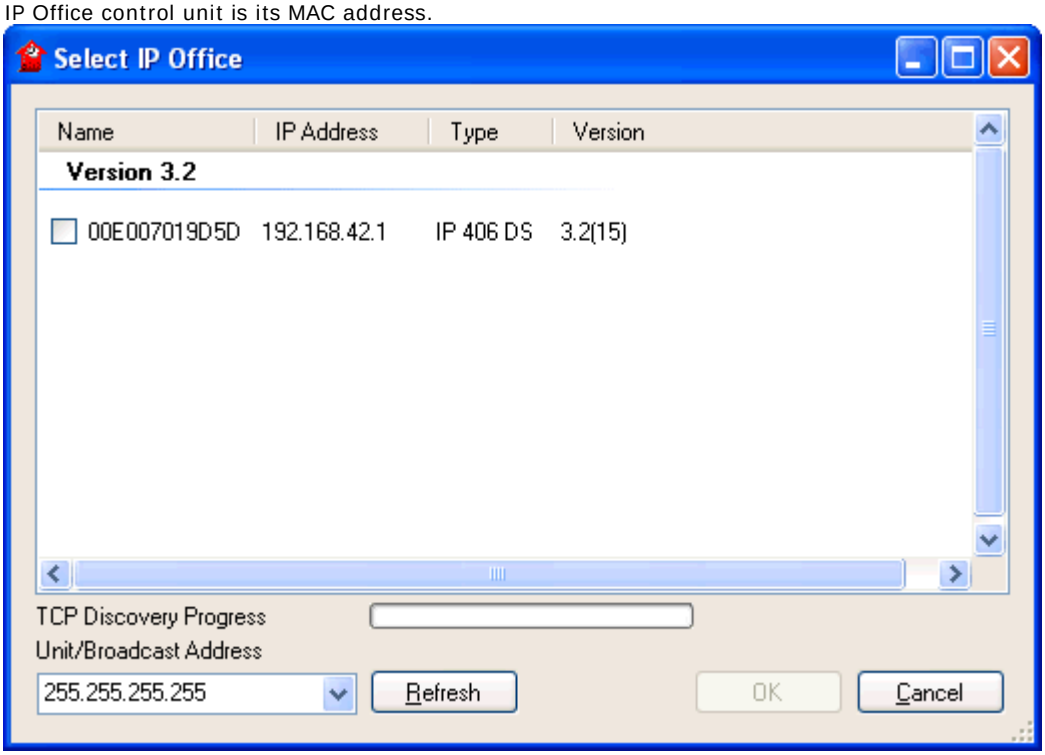

   - If the system required was not found, the address used for the search can be changed. Enter or select the required address in the Unit/Broadcast Address field and then click Refresh to perform a new search.
   - Click the check the box next to the system and then click OK.
5. The name and password request is displayed. The name and password must match one of those setup through the security settings. The default name and password for full configuration settings access is *Administrator* and *Administrator*.

3.4 Starting System Status

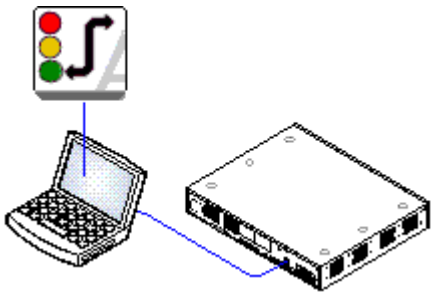

The IP Office System Status application (SSA) is a reporting tool that provides a wide range of information about the current status of an IP Office system. Its can report the available resources and components within the system and details of calls in progress. Details of the number of alarms are recorded and the time date of the most recent alarms.

When required for diagnostics escalation, SSA is able to take a snap shot image of the IP Office system's status including a copy of its current configuration. Use of SSA requires an IP Office service user name and password that has been configured for System Status access in the IP Office's security settings.

Requirements

- ☐ IP Office Administration PC
  A Windows PC with the IP Office Administrator Application suite installed.
- ☐ LAN Cable

1. There are several methods that can be used to start the IP Office System Status application.
   - On a PC where System Status has been installed, select Start | Programs | IP Office | System Status or if Manager is also installed and is running, select File | Advanced | System Status.
   - Start a web browse and enter the IP address of the control unit. Select the link for the System Status Application.
2. Once System Status has started, it will request the details of the IP Office system to which you want it to connect.

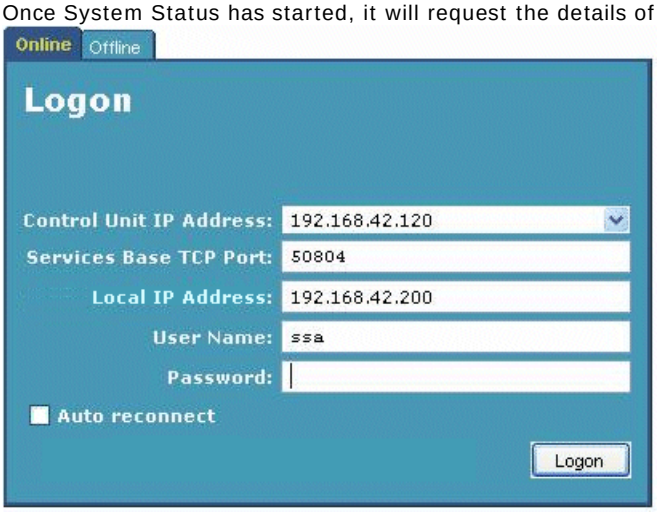

   - Control Unit IP Address
     Enter the IP address of the IP Office control units LAN interface or use the drop down to select a previously used address.
   - Services Base TCP Port
     This should match the Services Base TCP Port setting of the IP Office system, set in that systems security settings. The default is 50804.
   - Local IP Address
     If the PC has more than one IP address assigned to its network card or multiple network cards, the address to use can be selected if necessary. This allows SSA to be run on a PC that is already running an SSI connection to the IP Office for the IP Office Customer Call Reporter application.
   - User Name/Password
     Enter a user name and password that has been provided for SSA usage. The defaults match those used for adminsitration access using IP Office Manager.
   - Auto Reconnect
     If selected, SSA will attempt to reconnect using the same settings if connection to the IP Office is lost.
3. Enter the required details for the IP Office and click Logon.

3.5 Starting Monitor

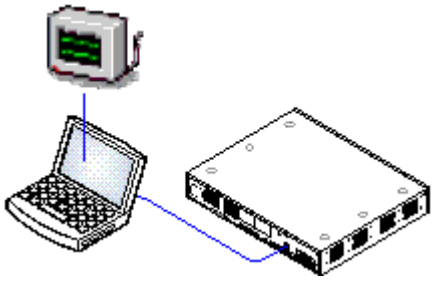

IP Office Monitor (also know as System Monitor) is a tool that can show all activity on the IP Office system in great detail. As a consequence, interpretation of Monitor traces requires a high-level of data and telephony protocol knowledge. However, all IP Office installers and maintainers must understand how to run Monitor when necessary as Avaya may request copies of Monitor traces to resolve support issues.

Requirements

- ☐ IP Office Administration PC
  A Windows PC with the IP Office Administrator Application suite installed.
- ☐ LAN Cable

1. Select Start | Programs | IP Office | Monitor.
2. If System Monitor has been run before it will attempt to connect with the system which it monitored previously. If otherwise or you want to monitor a different system use the steps below.
3. Select File | Select Unit.

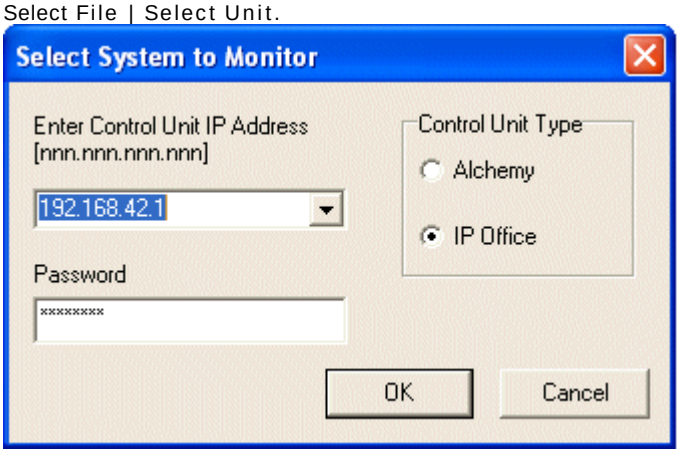

4. Enter the IP Office IP address and password of the IP Office Control Unit you want to monitor. The password is the same one as used for IP Office Manager.
   - For an IP Office system, ensure that the Control Unit Type is set to IP Office.
5. Click OK.

Chapter 4.
Installation

4. Installation

4.1 Tools and Parts Required

The following is a general summary of the tools required. Additional tools and equipment will be required for wall and or rack mounting and to fashion ground cable connections suitable to local requirements.

- Tools Required
  - ☐ 5mm Flat-blade screwdriver.
  - ☐ Crosshead screwdriver.
  - ☐ Anti-static wrist strap and ground point.
  - ☐ RJ45-RJ45 Ethernet LAN Cable.
  - ☐ M4 Cross-Head Screwdriver.
  - ☐ Tools suitable for crimping a cable spade.
  - ☐ If wall mounting, drills and tools for wall mounting fixtures.

- Additional Parts Required
  In addition to orderable IP Office equipment, the following items will be required.
  - ☐ 14AWG Solid copper wire for ground connection of control units and expansion modules.
  - ☐ Cable sleeve matching local regulator requirements for ground wires. Typically green for a functional ground and green/yellow for a protective ground.
  - ☐ If wall mounting, additional 4.5mm diameter fixtures and fittings suitable for the wall type.
  - ☐ Cable ties and labels for tidying and identifying cables.
- PC Requirements
  1. ☐ Windows PC with IP Office Admin suite installed and RJ45 Ethernet LAN port.
  2. ☐ SD Card reader.

4.2 Read the Documentation

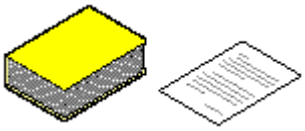

Ensure that you have read this manual in full before starting installation. Also include the installation documentation for any other equipment and applications being installed as part of the IP Office Essential Edition - PARTNER® Version system.

- IP Office Technical Bulletins
  Ensure that you have obtained and read the IP Office Technical Bulletin relating to the software release which you are installing. This bulletin will contain important information that may not have been included in the manual. IP Office Technical Bulletins are available from the Avaya support website http://support.avaya.com.

Other Documentation

- *IP Office Release 6.0 Product Description*
  Covers the features provided by IP Office Essential Edition - PARTNER® Version.
- *IP Office Essential Edition - PARTNER® Version Quick Installation Guide*
  Covers an out of the box installation of a system with analog trunks only and no additional configuration.
- *IP Office Essential Edition - PARTNER® Version Installation Manual*
  Covers the equipment supported and the installation of that equipment.
- *IP Office Essential Edition - PARTNER® Version Manager*
  Covers the system programming that can be performed using the IP Office Manager application.
- *IP Office Essential Edition - PARTNER® Version Phone Based Administration Manual*
  Covers the range of system programming that can performed from extensions 10 and 11 when fitted with 1400 Series phone (1408 and 1416) and ETR phone (ETR18D and ETR34D) extensions.
- *IP Office Essential Edition - PARTNER® Version Phone User Guide*
  Covers actions, including personal programming, that users can do from 1400 Series phone (1408 and 1416) and ETR phone (ETR18D and ETR34D) extensions.

Information Web Sites

IP Office documentation is available from the following web sites.

- Avaya Support (*http://support.avaya.com*)
  Contains documentation and other support materials for Avaya products including IP Office. Copies of the IP Office CD images are available from this site and updated core software .bin files.
- Avaya IP Office Knowledge Base (*http://marketingtools.avaya.com/knowledgebase*)
  Access to an on-line regularly updated version of the IP Office Knowledge Base.

4.3 Unpacking

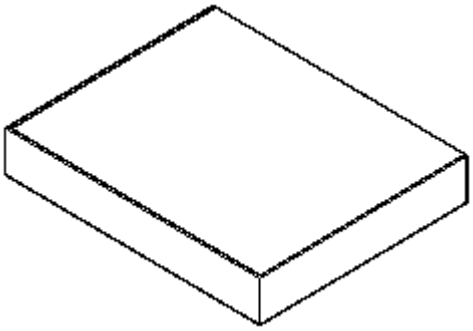

Use the following procedure when unpacking any equipment supplied by Avaya or an Avaya reseller or distributor.

Information Required

- ☐ Equipment Checklist.
  An installation checklist of the parts and equipment ordered for the installation.

Procedure

1. ☐ Check for Package Damage
   Before unpacking any equipment, check for any signs of damage that may have occurred during transit. If any damage exists bring it to the attention of the carrier.
2. ☐ Check the Correct Parts Have Been Delivered
   Check all cartons against the packing slip and ensure that you have the correct items. Report any errors or omissions to the equipment supplier.
3. ☐ Retain All Packaging and Documentation
   While unpacking the equipment, retain all the packaging material. Fault returns are accepted only if repackaged in the original packaging. If performing a staged installation, the original packaging will also assist when repacking equipment to be moved to the final install site.
4. ☐ Ensure that Anti-Static Protection Measures are Observed
   Ensure that anti-static protection measures are observed at all times when handling equipment with exposed electrical circuit boards.
5. ☐ Check All Parts
   Visually inspect each item and check that all the necessary documentation and accessory items have been included. Report any errors or omissions to the dealer who supplied the equipment.
6. ☐ Check All Documentation
   Ensure that you read and retain any documentation included with the equipment.

4.4 SD Card Preparation

IP500 V2 control units are supplied with no installed firmware or configuration. When first powered up, the control unit will load and install the necessary firmware from the System SD card installed in it. It will then create a default configuration matching the cards installed in the control unit and external expansion module attached to it.

You can perform a number of additional actions prior to installing the System SD card in order to pre configure the IP Office system.

- Upgrade the Card Firmware
- Add a License File
- Add a Configuration File

Additional actions that can be performed on SD cards are detailed in the SD Card Management section.

4.4.1 Upgrade the Card Firmware

This process will create the folder structure on the SD card and copy the necessary firmware files from those installed with Manager onto the SD card. This includes the binary files for the IP Office 500v2 system, any external expansion modules and phones. It also includes the prompt files for embedded voicemail operation.

This process can be used to upgrade an existing SD card to match the file set installed with Manager. For the card to be used in an IP Office 500v2 system System SD slot the card must be Avaya SD Feature Key card. The card must be correctly formatted (see Format IP Office SD card).

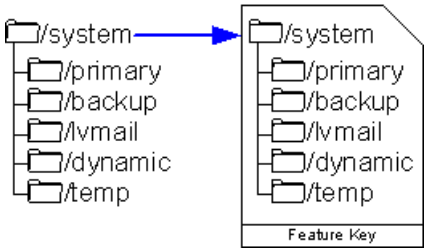

1. Note: This process can take up to 20 minutes depending on the PC. Once started it is recommended that the process is not interrupted.
2. Insert the SD card into a reader slot on the Manager computer.
3. Using Manager, select File | Advanced | Recreate IP Office SD Card.
4. Select IP Office Partner Version. This selection will affect how the IP Office Essential Edition - PARTNER® Version system operates when defaulted with this card present in its System SD card slot. .
5. Browse to the card location and click OK.
6. Manager starts creating folders on the SD card and copying the required files into those folders.

4.4.2 Adding a License File

For IP500 V2 control uits, if a licence file called keys.txt is found in the SD card folder which the IP Office uses when it boots, the IP Office will merge the licenses in that file with its configuration.

The files should be a plain text file (UTF8) containing either:

- A license name and license key separated by a comma on each line.

```
Teleworker, uAuToY@9VvVV@VOzIgeegwLXL2sAs1Z5
Mobile Worker, NvWO_iVY5KJpZMNeY89IB1sIj0_QUCDm
Power User, 9IJQW3yuPsbxjGS2XcMa16_J9H8cSeZ9
System Advanced, JAWZaw@YtK37vcnXkqM4mDYDIdSMd9_1
```

- A license key on each line.

```
uAuToY@9VvVV@VOzIgeegwLXL2sAs1Z5
NvWO_iVY5KJpZMNeY89IB1sIj0_QUCDm
9IJQW3yuPsbxjGS2XcMa16_J9H8cSeZ9
JAWZaw@YtK37vcnXkqM4mDYDIdSMd9_1
```

1. Using a card reader, copy the file into the */system/primary* folder on the System SD memory card.

4.4.3 Adding a Pre-Built Configuration File

IP Office Manager can be used to create an IP Office configuration file. For IP500 V2 control units, such a pre-created IP Office configuration file can be placed on the System SD card. That file will then be used when the IP Office system is started.

1. Using IP Office, create an offline configuration that matches the customer requirements and the equipment that will be installed in the IP Office.
2. Rename the configuration file *config.cfg*.
3. Using a card reader, copy the file into the */system/primary* folder on the System SD memory card.

4.4.3.1 Creating a Configuration File

IP Office Manager can be used to create a new configuration without connecting to an IP Office system. During the process, you can specify the locale of the system, what type of trunk cards it uses and what type of control unit and expansion modules to include.

This allows the creation of a configuration prior to installation of system. For IP500 V2 control units, the configuration file can be placed onto the System SD card before it is installed into the system. For other IP Office control units, the configuration can be uploaded using Manager after initial installation of the system.

- The configuration created must match the physical equipment in the IP Office system onto which the configuration will be loaded. Doing otherwise may cause the IP Office system to reset and experience other problems.
- The configuration creation tool includes all control units, external expansion modules and trunk cards supported by IP Office Release 6. It is you responsibility to confirm what IP Office equipment is supported in your locale.

1. Start IP Office Manager with no configuration loaded into Manager
2. Click on Create an Offline Configuration in the simplified view.

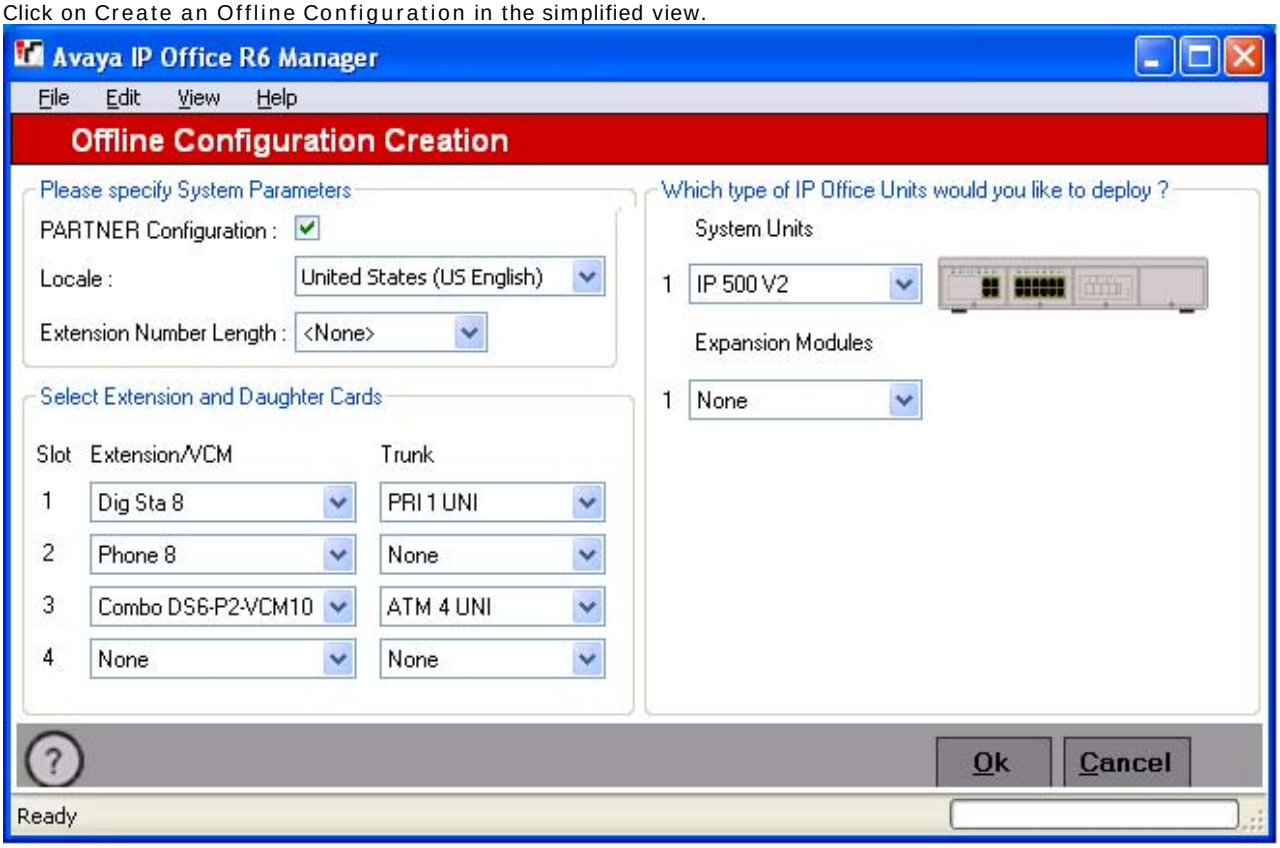

3. Select the type of configuration that you want to create. When completed click OK.
4. Manager will create and load the configuration.Edit the configuration to match the customer requirements.
5. When completed, select File | Save Configuration As.

4.5 IP500 Card Installation

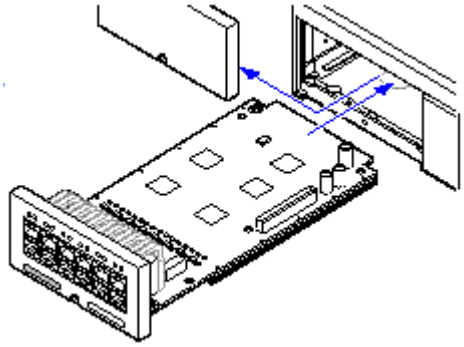

The IP500 base cards and trunk daughter cards should be fitted before power is applied to the control unit. Ensure that cards are inserted in the order that matches the planned or pre-built configuration.

1. Fitting IP500 Trunk Daughter Cards to the Base Cards.
2. Installing IP500 Cards into the Control Unit.

- ⚠ Warnings
  - Correct anti-static protection steps should be taken before handling circuit boards.
  - Cards must never be added or removed from the control unit while it has power connected.

- General Notes
  - Cards can be fitted in any order into any available slots. The only exception is the IP500 4-Port Expansion card which can only be installed in right hand slot 4.
  - It is recommended that cards are fitted from left to right.
  - There are restrictions to the number of supported cards of some types. When such a limit is exceed, the right-most card of that type will not function.
  - Ensure that you use the labels supplied to identify the card fitted into the control unit.

4.5.1 IP500 Daughter Card Preparation

IP500 trunk daughter cards can be fitted to any IP500 base card. For IP500 Combination cards, the trunk daughter card is pre-installed and cannot be changed.

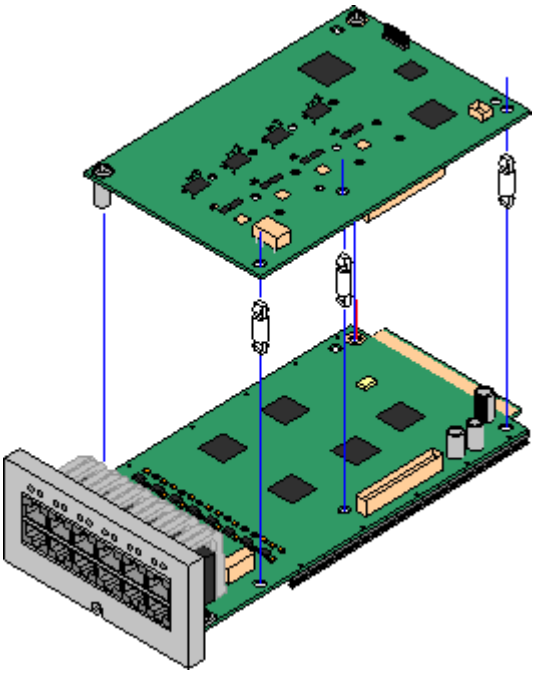

Warnings

1. Correct anti-static protection steps should be taken while handling circuit boards.

Parts and Equipment Required

1. ☐ IP500 Base Card.
2. ☐ IP500 Trunk Daughter Card
3. ☐ 3 Stand Off Pillars
   These are supplied with the trunk daughter card.

Tools Required.

1. ☐ 5mm Flat-blade screwdriver.
2. ☐ Anti-static wrist strap and ground point.

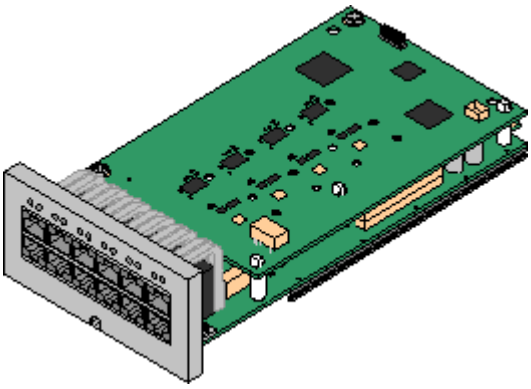

Procedure: Installing an IP500 Trunk Daughter Card

1. Check that correct cards have been supplied.
2. Ensure that you are wearing an anti-static wrist strap connected to a suitable ground point.
3. On the base card identify the position of 3 holes for the plastic pillars for the IP500 card. These are along the same edge as the card connector.
4. Fit the stand off pillars to the IP500 base card.
5. If there is a clip-on metal shield over the connector block on the base card, remove it.
6. Using minimal force and checking that the pins are correctly located, push the IP500 trunk card onto its connector block and the stand off pillars.
7. Check that the card connector has snapped into position.
8. Using the washers and screws provided, secure the metal stand off pillars to the base card.
9. A set of labels are supplied with the trunk daughter card. Fit the appropriate label to the front of the base card.

4.5.2 IP500 Card Insertion

Having prepared each IP500 base card by adding a trunk daughter card if required, the base card can be inserted into the control unit.

- ⚠ Warnings
  - Correct anti-static protection steps should be taken while handling circuit boards.
  - Cards must never be added or removed from the control unit while it has power connected.

- Tools Required
  - ☐ 5mm Flat-blade screwdriver.
  - ☐ Anti-static wrist strap and ground point.

Installing an IP500 Card

1. Check that there is no power to the control unit.
2. Using a flat-bladed screwdriver, remove the cover from the slot on the front of the control unit that will be used for each card being installed. This cover is no longer required but should be retained until installation has been completed.

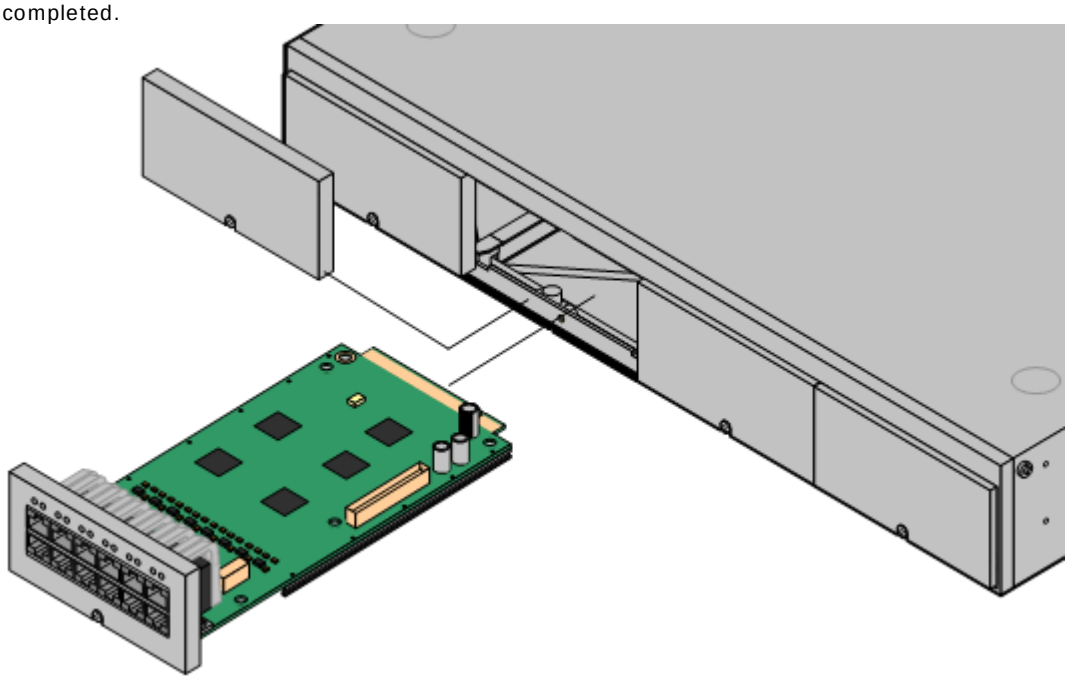

3. Allowing the card to rest against the bottom of the slot, begin sliding it into the control unit. When half inserted, check that the card rails have engaged with the slot edges by trying to gently rotate it. If the card rotates remove it and begin inserting it again.
4. The card should slide in freely until almost fully inserted. At this point apply pressure at the base of the front of the card to complete insertion.
5. Using a flat-bladed screwdriver secure the card.

4.6 Wall Mounting

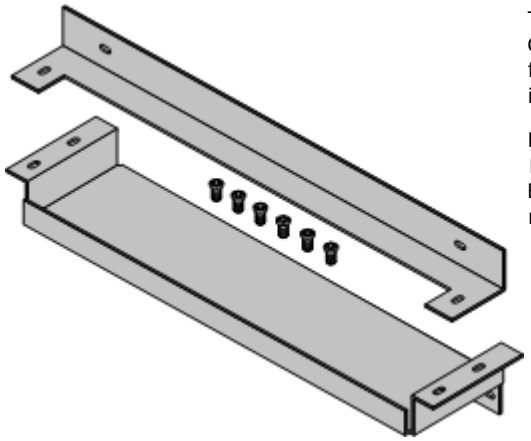

The IP Office 500v2 control unit can be wall mounted. This requires an IP Office 500 Wall Mounting Kit (SAP 700430150) plus additional 4.5mm fixtures and fittings suitable for the wall type. The wall mounting kit includes two brackets, one top and one bottom.

Environmental Requirements
In addition to the existing environmental requirements for an IP Office Essential Edition - PARTNER® Version system, the following additional requirements apply when wall mounting a unit:

- ⚠ The wall surface must be vertical, flat and vibration free.
- ⚠ A minimum clearance of 500mm (19.7 inches) is required on all sides.
- ⚠ The unit must be orientated as shown when mounted. That is with the base card slots facing right when viewed from in front of the unit.
- ⚠ The brackets must be used as shown, with the deeper tray-like bracket used at the bottom of the wall mounted control unit.
- ⚠ Only the screws (M3 x 6mm) provided with the mounting kit should used to attach the brackets to the control unit.

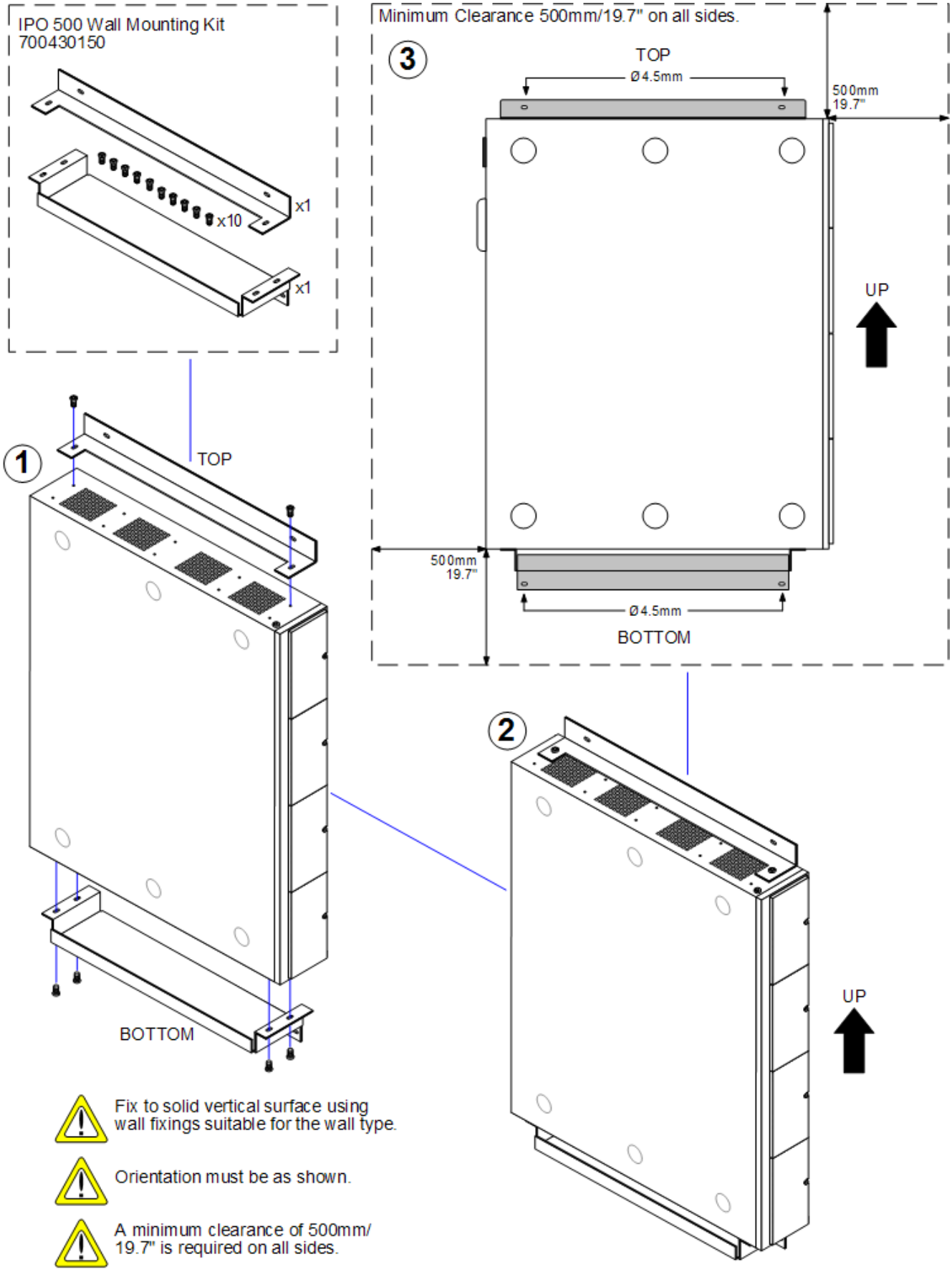
IPO 500 Wall Mounting Kit
700430150
x1
x10
x1
Minimum Clearance 500mm/19.7" on all sides.
3
TOP
Ø4.5mm
500mm
19.7"
UP
500mm
19.7"
Ø4.5mm
BOTTOM
1
TOP
BOTTOM
2
UP
Fix to solid vertical surface using wall fixings suitable for the wall type.
Orientation must be as shown.
A minimum clearance of 500mm/ 19.7" is required on all sides.

4.7 Rack Mounting

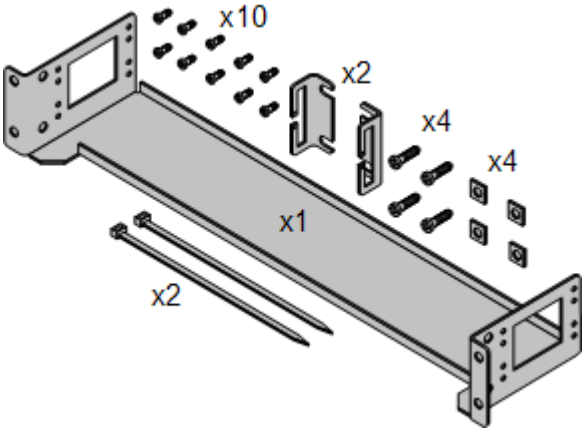

The IP Office 500v2 control unit and IP Office 500 external expansion units can be rack mounted if required into 19-inch rack systems. This requires an IP Office 500 Rack Mounting Kit (SAP 700429202) for each unit.

The kit includes:

- A rack mounting bracket and screws for attachment of the bracket to the unit
- Nuts and bolts for rack attachment.
- Brackets and cable ties for cable tidying.

As indicated in the diagram following, the rack mounting bracket can be used in several positions on the unit.

Environmental Requirements

In addition to the existing environmental requirements, the following additional factors must be considered when rack mounting a unit:

1. Rack Positioning
   Ensure compliance with the rack manufacturers safety instructions. For example check that the rack legs have been lowered and fixing brackets have been used to stop toppling.
2. Elevated Operating Ambient
   If installed in a closed or multi-unit rack assembly, the operating ambient temperature of the rack environment may be greater than room ambient. Therefore, consideration should be given to installing the equipment in an environment compatible with the maximum ambient temperature (Tma) specified by the manufacturer.
   - Operating Temperature: 0°C (32°F) to 40°C (104°F).
   - Operating Humidity: 10% to 95% non-condensing.
3. Reduced Air Flow
   Installation of the equipment in a rack should be such that the amount of air flow required for safe operation of the equipment is not compromised. Proper ventilation must be maintained. The side ventilation slots on the IP Office 500 control unit should not be covered or blocked.
4. Mechanical Loading
   Mounting of the equipment in the rack should be such that a hazardous condition is not achieved due to uneven mechanical loading.
5. Circuit Overloading
   Consideration should be given to the connection of the equipment to the supply circuit and the effect that overloading of the circuits might have on over-current protection and supply wiring. Appropriate consideration of equipment nameplate ratings should be used when addressing this concern.
6. Reliable Earthing
   Reliable earthing of rack-mounted equipment should be maintained. Particular attention should be given to supply connections other than direct connections to the branch circuit (e.g. use of power strips).
7. ⚠ Only the screws (M3 x 6mm) provided with the mounting kit should used to attach the brackets to the control unit.

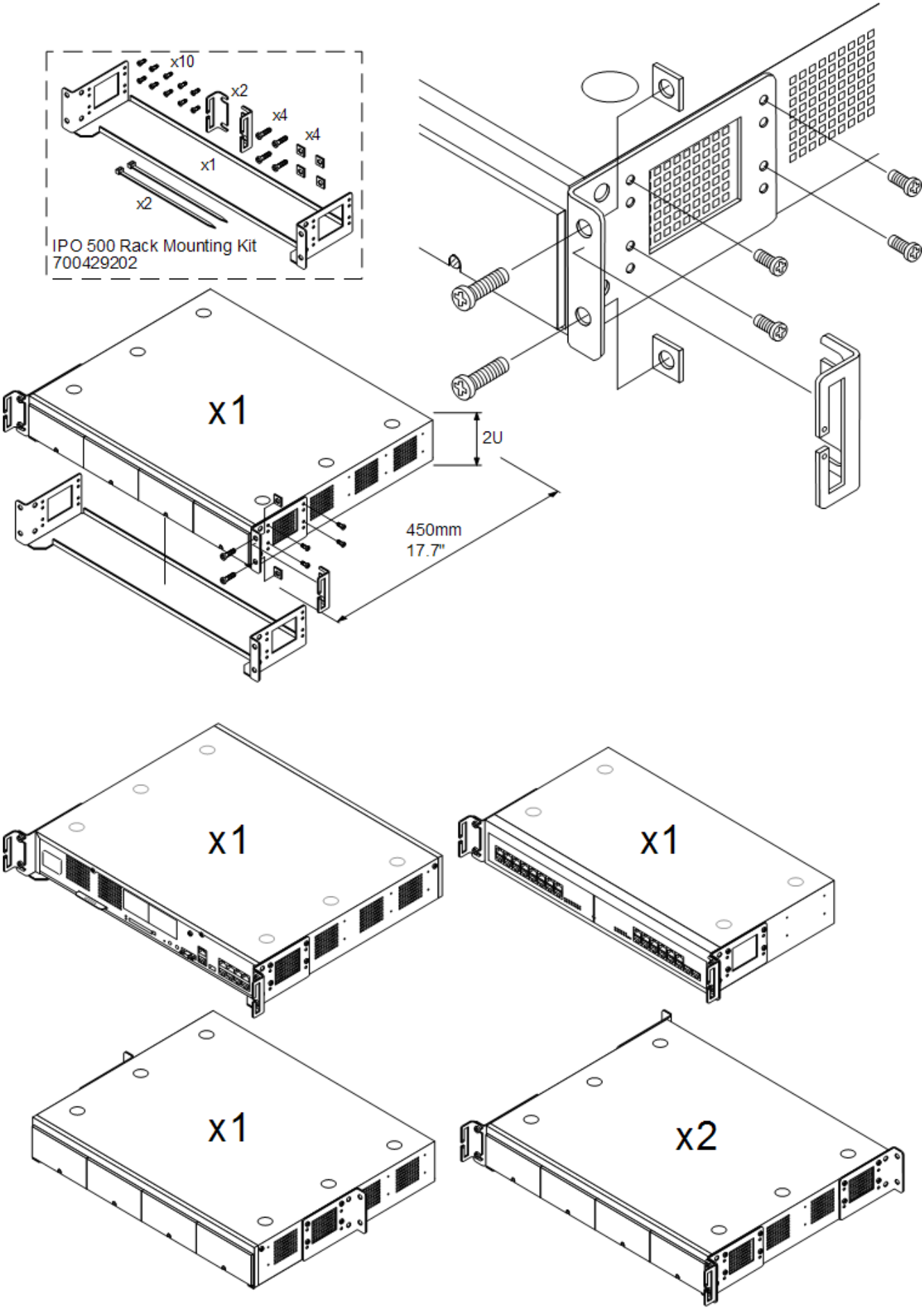
x10
x2
x4
x4
x1
x2
IPO 500 Rack Mounting Kit
700429202
x1
2U
450mm
17.7"
x1
x1
x1
x2

4.8 Connecting an External Expansion Modules

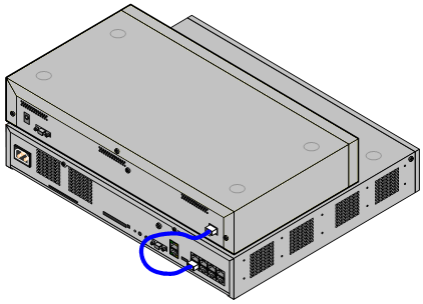

Any external expansion modules should be connected to the control unit before power is applied to the control unit. The module connects to the IP Office control unit using an expansion interconnect cable.

Each module is supplied with an expansion connect cable and a power supply unit. An IEC60320 C13 type earthed power cord is required.

- The external expansion module is supplied with a blue 1 meter (3'3'') expansion interconnect cable. This cable must be used when connecting to expansion ports on the rear of a control unit.

Installation Requirements

- ☐ Installation space either on or under the existing IP Office control unit.
- ☐ Switched power outlet socket.
- ☐ Available EXPANSION port on the control unit.
- ☐ Connections of a protective ground.

Tools Required

- ☐ Manager PC.
- ☐ Tools for rack mounting (optional).

Parts and Equipment Required

- ☐ External Expansion Module.
  Each module is supplied with a suitable external power supply unit and a 1m blue interconnect cable. 2m Yellow interconnect cables are supplied with the IP500 4-Port Expansion card and should only be used with that card.
- ☐ Power cord for the power supply unit. An IEC60320 C13 type earthed power cord is required.
- ☐ Rack mounting kit (optional).
- ☐ Cable labeling tags.

Procedure

1. External expansion modules should not be attached to a control unit that has power.
2. If the IP Office system is being installed in a rack, attach the rack mounting kit to the expansion module.
3. Attach the external expansion module's power supply but do not switch power on.
4. Connect the expansion interconnect cable from the module's EXPANSION port to the EXPANSION port 1 on the control unit.

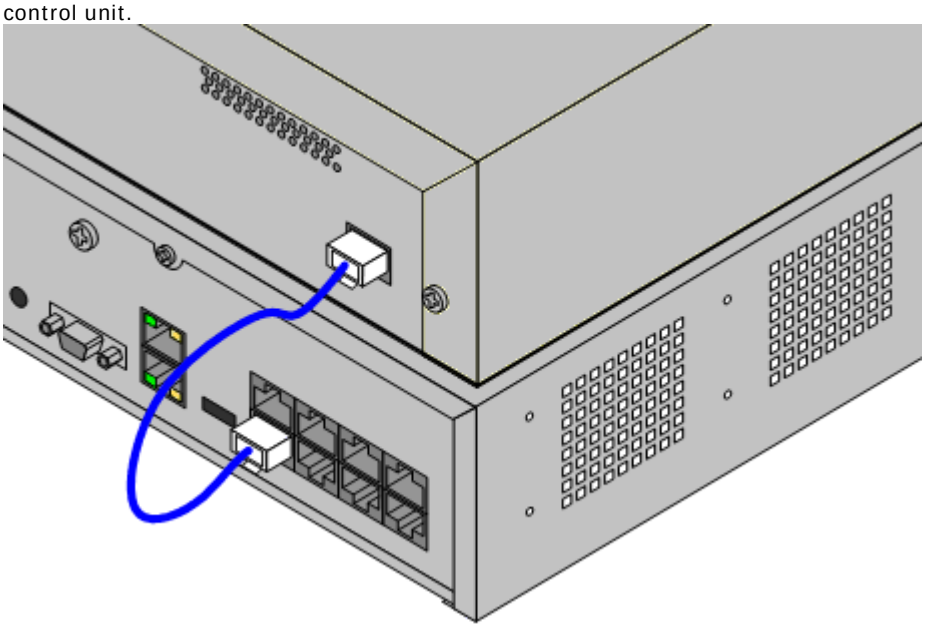

4.9 Grounding

Use of ground connections reduces the likelihood of problems in most telephony and data systems. This is especially important in buildings where multiple items of equipment are interconnected using long cable runs, for example phone and data networks.

All IP Office control units and external expansion modules must be connected to a functional ground. Where the unit is connected to a power outlet using a power cord with an earth lead, the power outlet must be connected to a protective earth.

In some cases, such as ground start trunks, in addition to being a protective measure this is a functional requirement for the equipment to operate. In other cases it may be a locale regulatory requirement and or a necessary protective step, for example areas of high lightning risk.

- ⚠ WARNING
  During installation do not assume that ground points are correctly connected to ground. Test ground points before relying on them to ground connected equipment.
- Additional protective equipment
  In addition to grounding, additional protective equipment will be required in the following situations.
  - On any Digital Station or Phones external expansion module connected to an extension located in another building. Refer to "Out of Building Telephone Installations".
  - In the Republic of South Africa, on all Analog Trunk external expansion modules (ATM16) and on any control units containing an analog trunk cards (ATM4/ATM4U).

Tools Required

- ☐ M4 Cross-Head Screwdriver.
- ☐ Tools suitable for crimping a cable spade.

Parts and Equipment Required

- ☐ 14AWG Solid copper wire for ground connection.
- ☐ Cable sleeve matching local regulator requirements. Typically green for a functional ground and green/yellow for a protective ground.

The ground point on IP Office control units and expansion modules are marked with a ⏚ or ⏚ symbol. Ground connections to these points should use a 14 AWG solid wire with either a green sleeve for a functional ground or green and yellow sleeve for a protective ground.

IP500/IP500 V2 Control Unit

On IP500 control units the ground point is located above the RS232 DTE port.

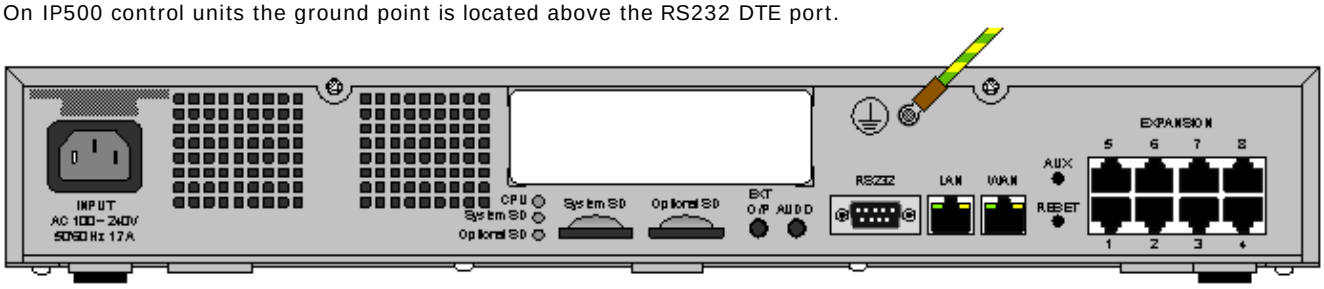

External Expansion Modules

On expansion modules, the ground point is a 4mm screw located towards the right on the rear of the module.

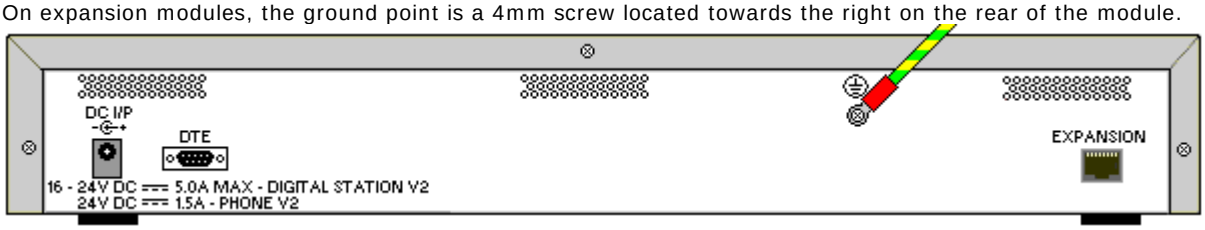

- On some older modules, the dedicated ground point screw is not present. In those cases, the top-center cover fixing screw (3mm) can be used as an alternative ground connection point. A toothed washer should be added to ensure good contact.

4.10 Starting the System

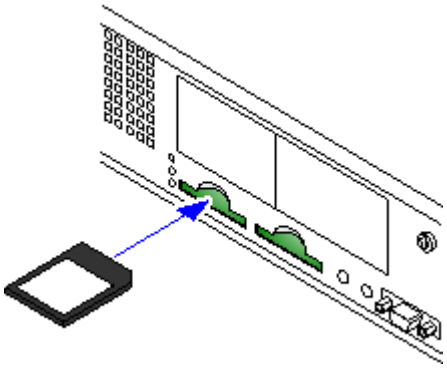

1. With the IP500 V2 control unit shut down or unpowered, insert the Avaya System SD card into the System SD slot on the rear of the control unit.
   - Ensure that you have the correct card. There are three versions, A-Law, Mu-Law and Partner Version.
   - Ensure that the card has the level of software required. If necessary the card can be upgraded to match a version of IP Office Manager.
2. Apply power to the external expansion module if any. The power outlet used must include a switch and the outlet must have a protective earth connection.
3. If the customer has a LAN network from which they want to be able to access the IP Office or to route SIP trunks, connect a cable from that network to the LAN port.
4. Apply power to the control unit. The power outlet used must include a switch and the power outlet must have a protective earth connection.
5. The control unit will begin loading firmware from the System SD card with which it will upgrade itself and the components installed in the control unit.
6. This process takes approximately a minute. The end of this process will be indicated by LED1 on each base card flashing every 5 seconds. LED9 on each base card fitted with a trunk daughter card will also flash every 5 seconds.
7. The control unit will then begin upgrading the external expansion modules. This will be indicated by the red center LED on each module flashing red. The process is completed when the LED changes to steady green.
8. If a configuration file is already present on the System SD card it is loaded by the IP Office. If not, the IP Office creates a default configuration based on the components as follow:
   - If the control unit has been connected to a LAN with a DHCP server, the unit will requests a DHCP address for itself. Otherwise it will use the default IP address 192.168.42.1/255.255.255.0.
   - Extensions will be assigned numbers starting from 10.
9. It should be possible now to use IP Office Manager to access the configuration of the IP Office.

The LEDs on the rear of the control unit go through the following sequence during a normal start up. Note that the times are approximately only:

LED	4s	4s	12s	5s	2s	5s	5s	10s	10s	Finished
CPU	Orange	Green	Green	Green Red	Green	Green	Green	Green	Green	Green
System SD	Orange	Off	Green	Green	Green	Off	Green	Green	Green Flash	Green
Optional SD If present.	Orange	Off	Green	Green	Green	Off	Off	Green	Green	Green

On the front of the control unit, LED1 on any IP500 base cards fitted is used as follows. LED9 is also used for any trunk daughter cards fitted.

LED	30s	30s	Finished
LED1/LED9	Red	Red Fast Flash	Red Flash every 5 seconds

4.11 Checking the LEDs

Control Unit LEDs

LED	Description
Optional SD System SD	• Off = Card shutdown. • Green on = Card present. • Green flashing = Card in use. • Orange steady = Reset imminent. • Red flashing = Card initializing or shutting down. • Red fast flashing = Card full • Red steady = Card failure/wrong type.
CPU	• Alternate red/green = Starting up. • Green on = Okay. • Red on = No software. • Flashing Red = Error/Shutdown.

Base Card LEDs

Base Card	LEDs 1 to 8 Usage

All Cards	• LED1 is used for base card status:
	  • Red On = Error
	  • Red Slow Flash = Initializing.
	  • Red Flash every 5 seconds = Card okay.
	  • Red Fast Flash = System shutdown.

IP500 Analog Phone	No status LEDs are used for analog phone extensions.
IP500 Digital Station	• Green On - Phone detected.
IP500 Combination	LEDs 1 to 6 • Green On - Phone detected.

Trunk Daughter Card LEDs

Trunk Daughter Card	LEDs 9 to 12 Usage

All cards	• LED 9 is used for daughter card status.
	  • Red On = Error
	  • Red Slow Flash = Initializing.
	  • Red Flash every 5 seconds = Card okay.
	  • Red Fast Flash = System shutdown.

Analog Trunk	• Green on: Card fitted. • Green flashing: Trunk in use.
PRI Trunk	• Off: No trunk present. • Green on: Trunk present. • Green flashing: Trunk in use. • Red/Green Fast Flash (port 9) or Green Fast Flash (port 10): Alarm indication signal (AIS) from the trunk remote end. • Red with Green Blink (port 9) or Green Blink (port 10): Port in loopback mode (set through IP Office System Monitor).

External Expansion Module LEDs

- Green on = Module okay.
- Red flashing = Module starting up.
- Red on = Error.

4.12 Connecting Phones

Connect any analog phones to the Phone ports. Ensure that those connected to power failure ports are clearly labeled as such.

Connect any Avaya digital phones to the appropriate DS ports. When the IP500 V2 control unit is started, after loading its own firmware and the firmware for its external expansion modules, it will upload the appropriate firmware to the digital phones.

Avaya H323 phones do not need to be connected at this stage. They will go through a firmware upgrade process when connected to an IP500 V2 system that is already running. Refer to the IP Office H323 IP Phone Installation Manual.

Chapter 5.
Additional Processes

5. Additional Processes

This section covers the following additional installation processes:

- Switching Off an IP Office System
- Rebooting an IP Office System
- Memory Card Removal
- Upgrading the IP Office Software
- Out of Building Extensions
- Using the External Output Port
- Reset Button Usage
- AUX Button Usage

5.1 Adding Licences

License keys strings are used to activate various IP Office features of the IP Office Essential Edition - PARTNER® Version system.

Each license is a unique 32-character string based on the feature being licensed and the serial number of the SD card plugged into the system control unit. It is recommended that you use the Import control to import licenses. Alternatively the license keys can be cut and pasted into the Key field. Entering licenses manually is liable to errors caused by mis keying of the correct 32-character string.

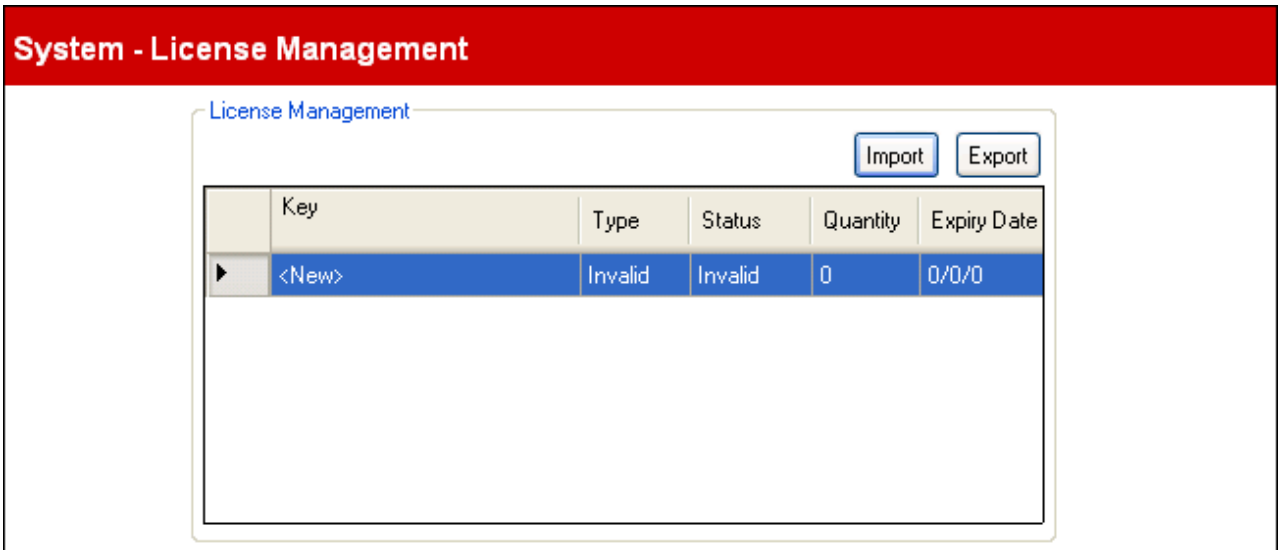

This dialog is reached by selecting System | License Management from the Manager *Admin Tasks* pane. It is used to enter licenses required for additional telephone system features. For example licenses are used to enable additional voicemail ports or the twinning feature.

- Import
  Import licenses from a CSV file. Each line of the file should contain a license name and the 32-character license key, each separated by a comma.
- Export
  Export the licenses to a CSV file. (Only if exportable licenses are present on the system)

For each license key entered, the following information is displayed:

- Key
  This is the 32-character license string.
- Type: *Information field, not editable.*
  If the Key is recognized, the name of the feature it licenses is shown in this field. If Invalid is displayed it indicates that the Key has not been correctly entered.
- Status:
  This field shows the status of the license.
  - *Unknown* is shown for newly entered licenses until the configuration is sent to the phone system and then reloaded again.
  - *Valid* is shown if the license key matches the SD card serial number.
  - *Invalid* is shown if the license key does not match the SD card serial number.
  - *Dormant* is shown if the license key is valid but is conditional on another license that is not present.
  - *Obsolete* is shown if the license key is valid but the license is no longer used by the version of software installed in the phone system.
- Quantity: *Information field, not editable.*
  This field indicates how many items are enabled by the license. The meaning of this will vary depending on the feature being licensed.
- Expiry Date: *Information field, not editable.*
  Some licenses have an expiry date. This field will indicate that date.

5.2 Changing Passwords

⚠ WARNING - Password Change Required
New IP Office Essential Edition - PARTNER® Version systems use default security settings. These settings must be changed to make the system secure. As a minimum, you should change the default Remote/Administrator Password if IP Office Manager IP Office Essential Edition - PARTNER® Version is to be attached. Failure to do so will render the IP Office Essential Edition - PARTNER® Version system potentially unsecured.

Remote administration password

This password controls remote or local access to the IP Office Essential Edition - PARTNER® Version system to make administrative changes to the overall set-up such as changes to the configuration or equipment. The administration password can only be changed by an administrator.

Change administrator password

1. From the Manager home page select Change Remote / Administration Password. A log in dialog is displayed
2. Provide login detail and enter *Administrator* (case sensitive) as your password. The change dialog is displayed.
3. Make required changes and click OK.

System Password

The system password is used to authorize overriding night service and other settings such as call barring from extension 10 or 11. If a system password is set, you must enter the system password before you can alter selected settings.

Once IP Office Essential Edition - PARTNER® Version is installed the responsibility for setting or altering this password rests with the customer.

Set or change system password using Manager

1. Click the hot link "Change System Settings"
2. In the *System Parameters* box, change system password (Field accepts digits only)

5.3 Switching Off an IP Office System

IP Office can be shut down in order to perform maintenance. The shut down can be either indefinite or for a set period of time after which the IP Office will automatically reboot.

During the shut down process, the current configuration in the control unit RAM memory is copied to the control units non-volatile memory.

The SD memory card can be shutdown and restarted separately from the system.

- ⚠ WARNING
  When shutdown the system cannot be used to make or receive any calls. This is not a polite shutdown, any users calls and services in operation will be stopped.

System Shutdown Using Manager

1. Using IP Office Manager, select File | Advanced | System Shutdown.
2. Using the Select IP Office menu, select the system to be shutdown by activating its checkbox.
3. You will be prompted for log in details
4. Select the shutdown mode. If Indefinite is used, the system can only be restarted by having its power switched off and then on again. If a Timed shutdown is selected, the IP Office will reboot after the set time has elapsed.

System Shutdown Using System Status

1. Start System Status and access the status output of IP Office.
2. In the navigation panel select System.
3. At the bottom of the screen select Shutdown System.
4. Select the time duration for the shutdown or indefinite.

System Shutdown Using a System Phone

This process can be used by any user configured as a System Phone user and using a 1400 Series phone. The user's Login Code is used to restrict access to system administration functions on the phone.

Unlike Manager, a system phone user cannot select an indefinite shutdown. The can set a timed shut down of between 5 minutes and 24 hours.

1. Select Features | Phone User | System Admin.
2. From the menu select System Shutdown.
3. Select a time period for the shutdown. It must be in between 5 minutes and 24 hours.
4. Press Done and then Confirm to begin the shutdown.

5.4 Rebooting an IP Office System

You can use IP Office Manager to reboot an IP Office system.

1. Using IP Office Manager, select File | Advanced | Reboot.
2. Use the Select IP Office menu to locate and select the IP Office system. Enter a valid user name and password.
3. The type of reboot can then be selected.

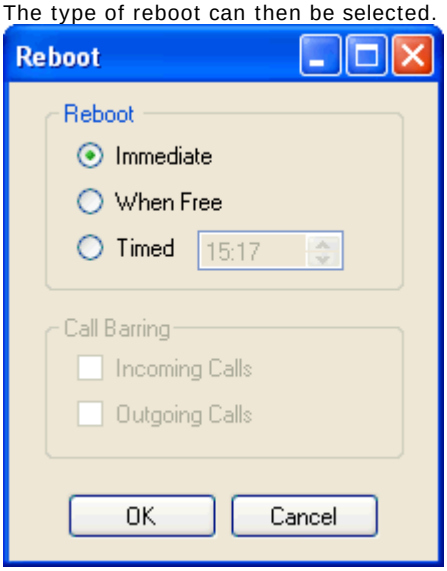

- Reboot
  Select when the reboot should occur.
  - Immediate
    Send the configuration and then reboot the IP Office.
  - When Free
    Send the configuration and reboot the IP Office when there are no calls in progress. This mode can be combined with the Call Barring options.
  - Timed
    The same as When Free but waits for a specific time after which it then wait for there to be no calls in progress. The time is specified by the Reboot Time. This mode can be combined with the Call Barring options.
- Reboot Time
  This setting is used when the reboot mode Timed is selected. It sets the time for the IP Office reboot. If the time is after midnight, the IP Office's normal daily backup is canceled.
- Call Barring
  These settings can be used when the reboot mode When Free is selected. They bar the sending or receiving of any new calls.

4. Click OK.

5.5 Memory Card Removal

Before a memory card is removed from an IP Office Essential Edition - PARTNER® Version system that is running, the card should be shutdown. Removing a memory card while the system is running may cause file corruption.

Shutting down the memory card disables all services provided by the card including embedded voicemail. Features licensed by the memory card will continue to operate for up to 2 hours.

Card services can be restarted by either reinserting the card or using a Start Up command.

Card Shutdown Using Manager

1. Using IP Office Manager, select File | Advanced | Memory Card Commands | Shutdown.
2. In the Select IP Office dialog, select the IP Office system containing the memory card.
3. Click OK.
4. At the back of the control unit, confirm that the memory card LED is off.
5. The card can now be removed in order to perform the necessary maintenance actions.

Card Reinsertion

Reinserting a card into a system that is already switched on will automatically restart the card. Similarly reinserting the card and rebooting the IP Office Essential Edition - PARTNER® Version system will restart the card. However, if the card has been shutdown but not removed, it can be restarted using Manager without requiring a reboot.

Card Startup Using Manager

1. Using IP Office Manager, select File | Advanced | Memory Card Commands | Startup.
2. Using the Select IP Office menu, select the IP Office system containing the memory card.
3. Click OK.

5.6 Upgrading the IP Office Software

The installed IP Office Manager includes IP Office software files for control units, external expansion modules and phones appropriate to the IP Office software level. The IP Office system can be upgraded in two ways:

- Using the IP Office Manager Upgrade Wizard
  The upgrade wizard is part of IP Office Manager and can be used to upgrade all types of IP Office system.
- Upgrading the System SD Card
  For IP500 V2 control units, the software on the System SD card can be upgraded by a range of methods. Then when the system is rebooted it will use the new software.

WARNINGS

- Check IP Office Technical Bulletins
  Check the latest IP Office Technical Bulletin for the IP Office software release before proceeding any further. It may contain information relating to changes that occurred after this document was completed. Bulletins are available from http://support.avaya.com.
- WAN3 10/100 Modules
  Upgrade each WAN3 10/100 module separately and only after having upgraded the control unit and any other expansion modules.
- Upgrading pre-Level 2.1 Systems
  For IP Office Systems with software Level 2.0 or earlier, the upgrade procedure must be done from a PC with a fixed IP address on the same subnet and LAN segment as the IP Office.
- Multi-Stage Upgrades
  Due to the need to adjust internal memory allocation and configuration storage, for some upgrades the control unit may need to perform multi-stage upgrade process. The table below indicates the require upgrade paths.

Control Unit	.bin File	Unvalidated Only	Validated
IP406 V2	ip406u.bin	–	2.1 > 3.0 > 3.0(999) > 3.1 > 3.1(999) > 3.2 > 6.0.
IP412	ip412.bin	1.3 > 2.1	2.1 > 3.0 > 3.1 > 3.2 > 6.0.
IP500	ip500.bin	–	4.0.0 > 6.0.
IP500 V2	ip500v2.bin	–	6.0

- Multiple Managers
  If more than one copy of Manager is running it is possible for the IP Office to request BIN files from a different Manager from the one that started the upgrade process. Ensure that only one copy of Manager is running when upgrading an IP Office system.
- Other IP Office Applications
  Upgrading the core software of the IP Office control unit may require upgrades to associated software. Typically IP Office is compatible with the previous release of most IP Office applications, however for each IP Office core software release there may be exceptions. These exceptions will be detailed in the Technical Bulletin for the IP Office core software release.

5.6.1 Using the Upgrade Wizard

1. Ensure that you have a backup copy of the IP Office's configuration before performing this action. If a copy of the configuration cannot be downloaded using Manager, check the Manager application directory for previously downloaded configurations.

   a. Use Manager to download an up to date copy of the configuration. If that is not possible, check in the Manager application folder for a previous copy of the configuration.

   b. Using IP Office Manager, select File | Open Configuration.

   c. Using the Select IP Office Menu, locate and select the IP Office system. Click OK.

   d. Enter the name and password for a service user account on that IP Office. Click OK. Manager will receive and display the configuration from the IP Office.

      - If not already done, this action creates a BOOTP entry in Manager for the IP Office system.
      - This action also confirms communication between the Manager PC and the IP Office prior to any following process.

   e. Select File | Save Configuration As... and save a copy of the configuration file onto the PC.

2. Select File | Advanced | Upgrade. The UpgradeWiz is started and scans for IP Office modules using the Unit/Broadcast address. Adjust this address and click Refresh if the expected control units are not shown.

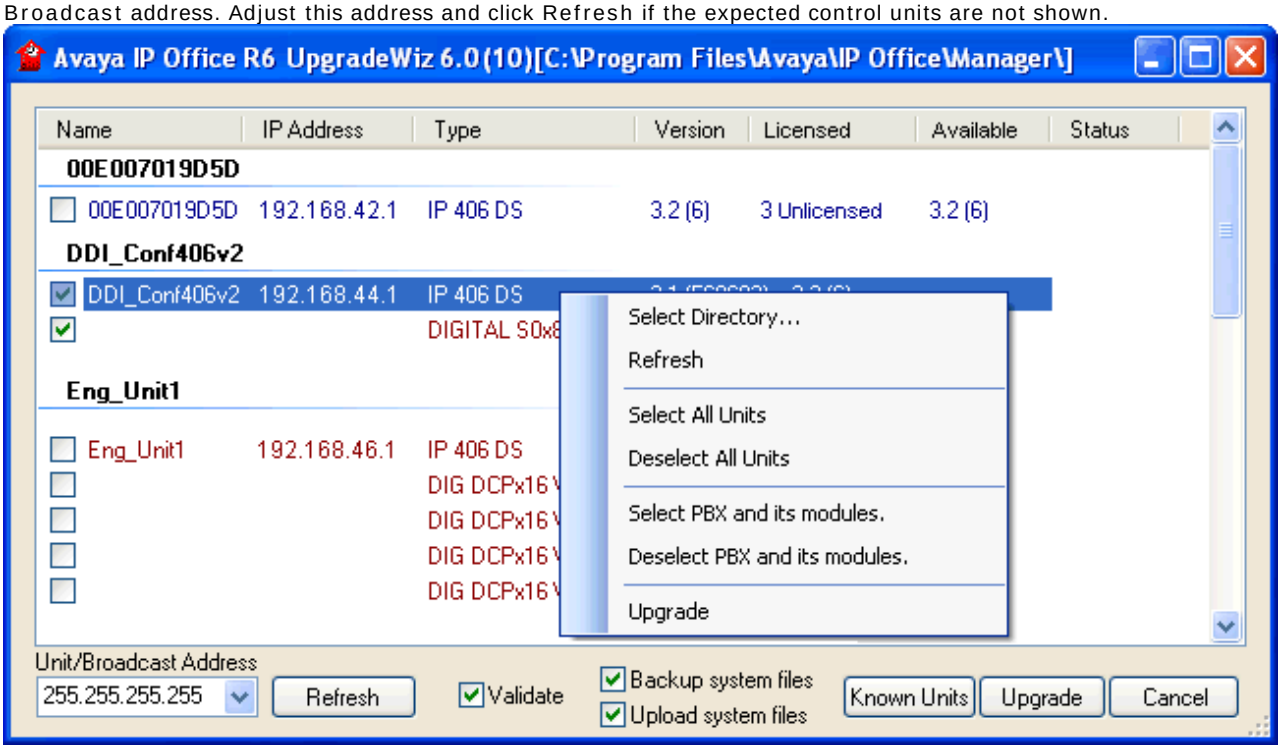

2. The current version of each IP Office .bin file held in the control units memory is shown. That is regardless of whether that .bin file is currently being used by any module in the system.

3. In the Available column Manager indicates the versions of software it has available. Where Manager detects that it has a higher version available, the tick box next to that row is automatically selected.

4. For those modules which you want to upgrade, tick the check box.

5. The following additional options are available and recommended.

   - Validate
     Do not unselect this option.

   - Backup System Files
     If selected, before upgrading to the new software, the current files in the System SD cards /primary folder will be copied to its /backup folder.

   - Upload System Files
     If selected, the full set of software files that Manager has is copied to the /primary folder on the System SD card. In addition to control unit and module software this will include phone software files. Following the reboot, the phone will upgrade using those files if necessary.

6. Select Upgrade. The system password for each system will be requested. Enter it and click OK. The next steps depend on the upgrade options selected. Do not cancel or close the upgrade wizard while these processes are running.

7. Following the upgrade check that the upgrade wizard now shows that the selected units and modules have upgraded. It may be necessary to select Refresh to update the information in the upgrade wizard display.

5.6.2 Using an SD Card

In addition to using the traditional IP Office Upgrade Wizard, IP500 V2 control units can be upgraded by loading the required set of firmware files onto the System SD card and rebooting the system.

- ⚠ IP Office Technical Bulletins
  Ensure that you have obtained and read the IP Office Technical Bulletin relating to the IP Office software release which you are installing. This bulletin will contain important information that may not have been included in this manual. IP Office Technical Bulletins are available from the Avaya support website (*http://support.avaya.com*).
- ⚠ Upgrade Licenses
  Some upgrades may require entry of upgrade licenses.
- ⚠ WARNING
  These processes will cause the IP Office system to be restarted, disconnecting any current calls and services in progress.

There are a number of ways in which this can be done.

Method	Description	Location	Software Files	Embedded Voicemail Prompts
Using Manager	Using IP Office Manager, the contents of the card are compared to the files that Manager has available and are upgraded if necessary.	Local or Remote	✓	✓
System SD Card Upgrade	In this method, the System SD card is shut down and removed from the control unit. The card's contents are upgraded using IP Office Manager.	Local	✓	✓
Upgrade from Optional SD Card	This method uses an SD card loaded with the required version of IP Office software. The card is inserted into the control unit and then Manager, System Status or a system phone is used to transfer the software to the System SD card.	Local	✓	–

5.7 Out of Building Telephone Installations (COPY)

The following are the only supported scenarios in which wired extensions and devices outside the main building can be connected to the IP Office system. In these scenarios, additional protection, in the form of protective grounding and surge protectors, must be fitted.

- ⚠ WARNING
  The fitting of additional protection does not remove the risk of damage. It merely reduces the chances of damage.

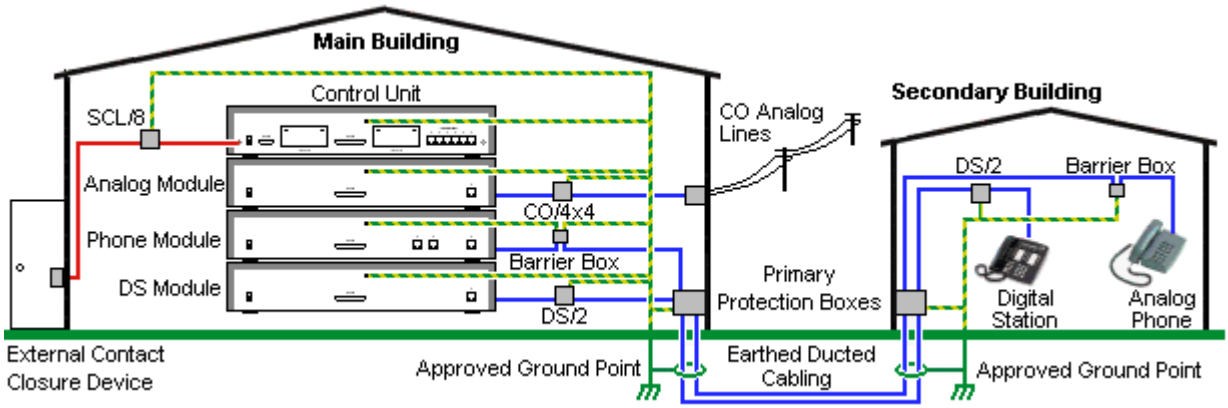

- Cables of different types, for example trunk lines, phone extensions, ground and power connections, should be kept separate.
- All cabling between buildings should be enclosed in grounded ducting. Ideally this ducting should be buried.
- A Primary Protection Box must be provided at the point where the cables enter the building. This should be three point protection (tip, ring and ground). Typically this would be gas tube protection provided by the local telephone company. The ground wire must be thick enough to handle all the lines being affected by indirect strike at the same time.

Connection Type	Protection Device Type	Requirement
DS Phone Extensions External expansion module DS ports only.	ITWLinx towerMAX DS/2 Supports up to 4 connections. (This device was previously referred to as the Avaya 146E).	• Connection from the expansion module to the phone must be via a surge protector at each end and via the primary protection point in each building. • The IP Office expansion module and control unit and IROB devices must be connected to the protective ground point in their building. • The between building connection must be via earthed ducting, preferable underground. The cable must not be exposed externally at any point.
Analog Phone Extensions Phones External expansion module (POT or PHONE) ports only.	IP Office Barrier Box Supports a single connection. Maximum of 16 on any expansion module.	
Analog Trunks	ITWLinx towerMAX CO/4x4 Supports up to 4 two-wire lines. (This device was previously referred to as the Avaya 146C).	For installations in the Republic of South Africa, the fitting of surge protection on analog trunks is a requirement. For other locations where the risk of lightning strikes is felt to be high, additional protection of incoming analog trunks is recommended.
External Output Switch	ITWLinx towerMAX SCL/8 (This device was previously referred to as the Avaya 146G)	Connections from an IP Office Ext O/P port to an external relay device must be via a surge protector.

The towerMAX range of devices are supplied by ITWLinx (http://www.itwlinx.com).

5.7.1 DS Phones

When digital phone extensions are required in another building, additional In-Range Out-Of-Building (IROB) protective equipment must be used. For phones connected to IP Office DS ports, the supported device supplied by ITWLinx is a towerMAX DS/2 module. This IROB device was previous badged by Avaya as the 146E IROB.

- ⚠ CAUTION
  DS ports on the front of the IP406 V2 control units must not be used for extensions that are external to the main building.

The protection device should be installed as per the instructions supplied with the device. The ground points on the IP Office control unit and the DS modules must be connected to a protective ground using 18AWG wire with a green and yellow sleeve.

Typically the IROBs 2 RJ45 EQUIPMENT ports are straight through connected to the 2 RJ45 LINE ports. This allows existing RJ45 structured cabling, using pins 4 and 5, to be used without rewiring for up to two DS connection. However each of these ports can be used to connect a second extension using pins 3 and 6.

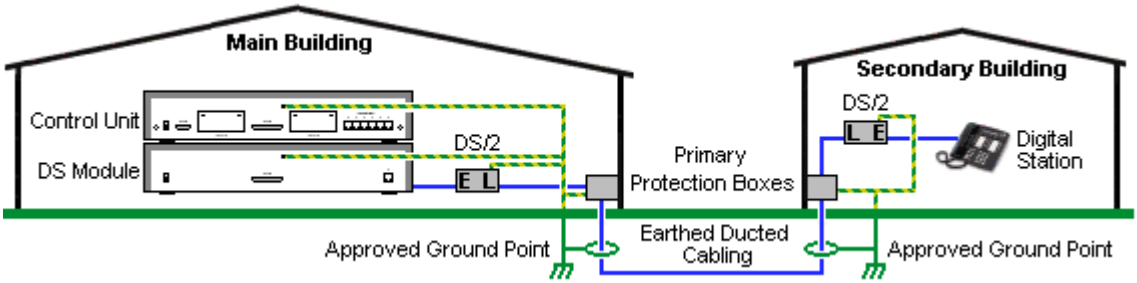

LINE		Signal		EQUIPMENT	
RJ45	1	Not used.	Ground, LINE, EQUIPMENT	1	RJ45
	2	Not used.		2	
	3	Ring II (Optional)		3	
	4	Ring I		4	
	5	Tip I		5	
	6	Tip II (Optional)		6	
	7	Not used.		7	
	8	Not used.		8	

5.7.2 Analog Phone Barrier Box

Where analog phone extensions are required in another building, additional protective equipment must be used, in the form of IP Office Phone Barrier Boxes and protective earth connections.

- ⚠ CAUTION
  PHONE (POT) ports on the front of control units must not be used for extensions that are external to the main building.
- The correct IP Office specific barrier boxes must be used. These modules have been designed specifically for the signalling voltages used by the IP Office system:
  - Only the IP Office Phone Barrier Box should be used with Phone V1 modules.
  - Only the IP Office Phone Barrier Box V2 should be used with Phone V2 modules.
  - No other type of analog phone barrier box should be used.
- Where more than 3 barrier boxes are required in a building, they must be rack mounted using a Barrier Box rack mounting kit.
- A maximum of 16 barrier boxes can be used with any Phone module.
- The Phone Barrier Box does not connect the ringing capacitor in Phone V1 modules.

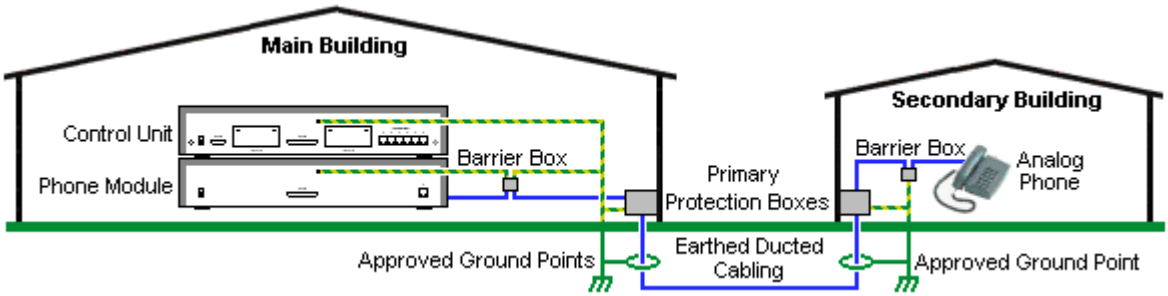

Main Building	Barrier Box	Secondary Building
• RJ11 Connect to PHONE (POT) port on the Phone module using cable supplied with the barrier box. • RJ45 Connect to the secondary building barrier box via primary protection in both buildings.	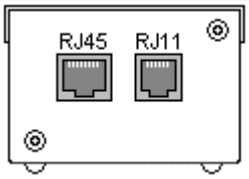	• RJ11 Connect to analog phone. Cable not supplied. • RJ45 From main building via primary protection in both buildings.
• Center Screw Connect to main building protective ground (or ground terminal of Barrier Box Rack Mounting Kit). Use 18AWG (minimum) wire with a green and yellow sleeve. • Right-Hand Screw Connect to ground point on Phone module using ground cable supplied with barrier box.	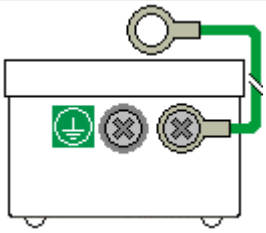	• Center Screw Connect to main building protective ground. Use 18AWG (minimum) wire with a green and yellow sleeve. • Right-Hand Screw Not used.

1. The following wires must be kept apart, that is not routed in the same bundle:
   - Earth leads from the barrier box to the Phone modules.
   - Internal wires, for example extension leads going directly to the Phone modules.
   - Wires from external telephone going directly to the barrier boxes.

IP Office Barrier Boxes		SAP Code
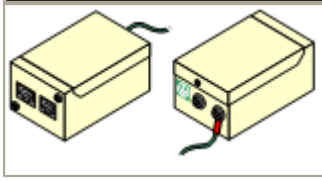	IP500 Phone Barrier Box (101V) Use with IP500 Phone external expansion module. Includes an RJ45 to RJ11 cable and a functional earth lead.	700385495
	Barrier Box Rack Mounting Kit	700293905

5.7.3 Rack Mounting Barrier Boxes

Where more than 3 Phone Barrier Boxes are used they must be rack mounted. The Barrier Box Rack Mounting Kit (SAP Code 700293905) supports up to 8 Phone Barrier Boxes.

1. Unscrew the two screws arranged diagonally at the front of each barrier box and use these same screws to reattach the barrier box to the rack mounting strip.
2. Each barrier box is supplied with a solid green ground wire connected to its functional ground screw. Remove and discard this wire. Connect a green/yellow ground wire to the protective earth screw in the center of the Point on the back of the Barrier Box.

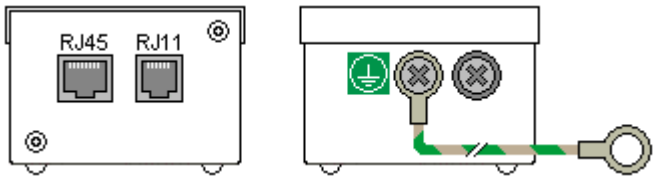

3. The rack mounting strip has threaded M4 earthing pillars. Connect the other end of the barrier box ground wire, using M4 washers and nuts, to the earthing pillar on that side of the rack mounting strip.

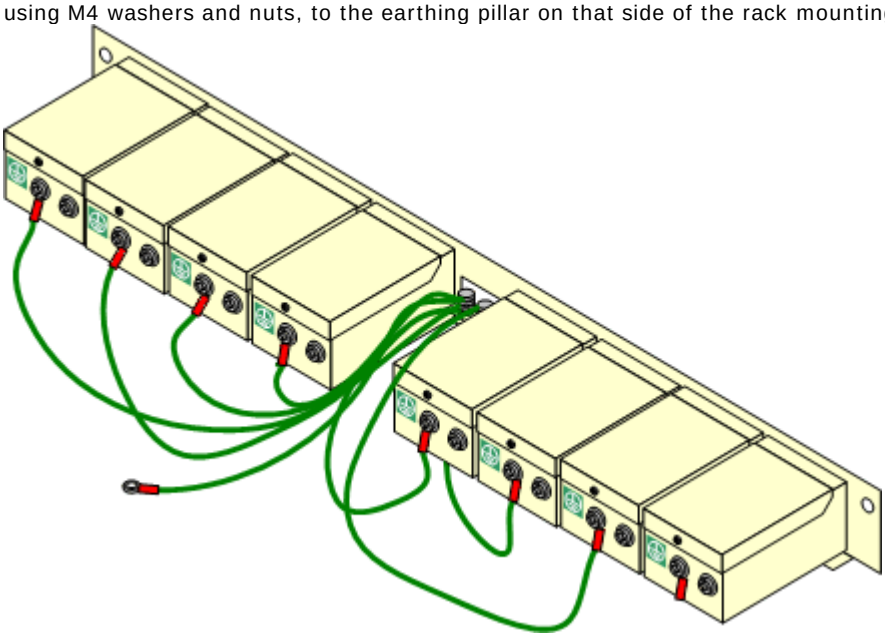

4. Using 14AWG wire with green and yellow sleeve, connect one of the earthing pillars to the buildings protective earth.
5. Using 14AWG wire with green and yellow sleeve, connect the other earthing pillar to the Phone module.
6. Ensure that the following wires are not routed together in the same bundle:
   - Earth lead from the barrier box to the Phone module.
   - Internal wires, e.g. wires going directly to the Phone module.
   - Wires from external telephone going directly to the barrier boxes.

5.8 Using the External Output Port

All the IP Office control units are equipped with a EXT O/P port. The port is marked as EXT O/P and is located on the back of the control unit adjacent to the power supply input socket.

The port can be used to control up to two external devices such as door entry relay switches. The usual application for these switches is to activate relays on door entry systems. However, as long as the criteria for maximum current, voltage and if necessary protection are met, the switches can be used for other applications.

The switches can be switched closed, open or pulsed (closed for 5 seconds and then open). This can be done in a number of ways:

- Using IP Office short codes.
- Through the Door tab in Phone Manager Pro.
- Through the Door Release option in IP Office SoftConsole.
- Via the Open Door action in Voicemail Pro.

Default Short Codes

The following are the default short codes in the IP Office configuration for external output switch operation. They use the short code features Relay On (closed), Relay Off (open) and Relay Pulse.

State	Switch 1	Switch 2
Closed	*39	*42
Open	*40	*43
Pulse	*41	*44

5.8.1 Port Connection

These ports are found on the rear of all IP Office control units. They are used for connection to external switching relays. The port uses a standard 3.5mm stereo jack plug for connection.

The IP Office is able to open (high resistance), close (low resistance) or pulse (close for 5 seconds and then open) two switches within the port. Either switch can be operated separately. These switches are intended for activation of external relays in systems such as door opening systems.

- CAUTION: In installations where this port is connected to a device external to the building, connection must be via a towerMAX SCL/8 Surge Protector and a protective ground connection must be provided on the IP Office control unit.

EXT O/P	Pin	Description
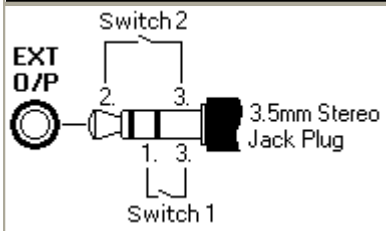	1	Switch 1.
	2	Switch 2.
	3	0 Volts (Ground/Chassis)

- Switching Capacity: 0.7A.
- Maximum Voltage: 55V d.c.
- On state resistance: 0.7 ohms.
- Short circuit current: 1A.
- Reverse circuit current capacity: 1.4A.
- Ensure that pins 1 and 2 are always at a positive voltage with respect to pin 3.

3.5mm stereo audio jack plugs are frequently sold as pre-wired sealed modules. It may be necessary to use a multi-meter to determine the wiring connections from an available plug. Typically 3 (common to both relays) is the cable screen.

5.9 Reset Button

The IP500 and IP500 V2 control units have a Reset button. Pressing the button while the control unit is starting up will pause the start up until the button is released. The effect of pressing the button during normal operation will depend on how long the button is pressed and is indicated by the CPU LED.

Press Duration (seconds)	CPU LED	Action	Summary
0 to 5.	Off	None	None.
5 to 10.	Orange	Reboot When Free	Reboot when free with new incoming/outgoing call barring. A reboot using the reset button is recorded in the Audit Trail.
10 to 30.	Flashing orange	Erase Configuration/ Immediate Reboot	Erase the configuration, alarm log and audit trail. Immediate reboot without waiting for active calls to end.
30 to 40.	Red	Erase All.	Erase configuration, alarm log and core software.
Over 40.	Flashing green	None	None.

5.10 AUX Button

IP500 V2 control units have an AUX button. This button can be used as follows.

If pressed during a restart of the control unit, the control unit skip booting from the */primary* folder on the System SD card.

If pressed for between 5 and 10 seconds when a system is running, the control unit will shutdown for 10 minutes.

Chapter 6.
SD Card Management

6. SD Card Management

The IP500 V2 control unit has two SD card slots, labeled System SD and Optional SD respectively. These are used as follows:

- System SD Card
  An Avaya System SD card must be present in this slot at all times. This card holds copies of the IP Office firmware and configuration and is used as the IP500 V2 control units non-volatile memory.
  - Each Avaya System SD card has a unique Feature Key serial number which is used for generating and validating licenses entered into the IP Office configuration.
  - The card stores the prompts for embedded voicemail operation and acts as the message store for embedded voicemail messages.
  - Prior to any planned shutdown or restart of the IP Office system, the current configuration running in the IP Office system's RAM memory is copied to the /primary folder on the System SD card.
  - Following a restart, the software in the primary folder is loaded by the IP500 V2 control unit and, if necessary, by the external expansion modules and phones.
  - Following a restart, if present, the configuration file in the primary folder is loaded by the OP500 V2 control unit. If no file is present the system will generate a default configuration file.
  - Once each day (approximately between 00:00 and 00:30) the IP Office will copy the current configuration running in its RAM memory to the primary folder on the card.
  - Configuration changes made using IP Office Manager are first written to the copy of the configuration file on the card and then merged with the configuration running in the IP Office system's RAM memory.
  - The write lock setting on cards in the System SD card slot is ignored.
- Optional SD Card
  A card does not have to be present in this slot for normal IP Office operation. The slot can be used for various maintenance actions.
  - A card with an updated IP Office software or configuration can be inserted and those files then transferred to the System SD card in order to upgrade the IP Office system.
  - The full contents of the System SD card can be copied to the Optional SD card while the IP Office system is running.
  - The write lock setting on cards in the Optional SD card slot is honored.

⚠ SD Card Removal

SD cards should never be removed while being used. Though the SD card slot LEDs indicate when data is being written to an SD card, lack of flashing LED is not a sufficient safeguard. The IP Office Manager provides methods to shutdown and restart an individual card or to shutdown the system in order to allow removal of an SD card. If the System SD card is removed, licensed features will continue operating for up to 2 hours.

Card Maintenance Actions

Using IP Office Manager, IP Office System Status Application or a phone configured as a System Phone, a number of actions can be performed on the SD cards.

Action	Description	Manager	System Status	System Phone	Minutes
Shutdown/Restart	Memory cards should always be shutdown before being removed when the system is running. Though the card slot LEDs indicate when data is being written to an card, lack of flashing LED is not a sufficient safeguard. Shutting down the card will disable embedded voicemail if being used. If the System SD card is removed, features licensed by the card's Feature Key serial number will continue operating for up to 2 hours.	✓	✓	✓	–
Backup	Copy the files in the /primary folder on the System SD card to the /backup folder on the card.	✓	✓	✓	6
Restore	Copy the files in the /backup folder on the System SD card to the /primary folder on the card and restart the IP Office system.	✓	✓	✓	6
Copy	Copy all the files on the System SD card to the Optional SD card.	✓	✓	✓	90
Upgrade Binaries	Copy software files in the /primary folder on the Optional SD card to the /primary folder on the System SD card and then restart the IP Office system.	✓	–	–	5
Upgrade Configuration	Copy the configuration file in the /primary folder on the Optional SD card to the /primary folder on the System SD card and then restart the IP Office system.	✓	–	–	5 seconds
Upload System Files	Upload a set of IP Office software and embedded voicemail prompts to the System SD card.	✓	–	–	40
View Files	View the folders and files on the control unit memory cards.	✓	–	–	–
	The actions below can be performed on cards in a SD card reader on a PC running IP Office Manager.				
Format	Reformat a card for IP Office usage without removing the Feature Key serial number. • ⚠ This process will erase all existing files on the card.	✓	✓	–	1
Recreate	Create the folder structure on a memory card and copy a set of IP Office software files into those folders.	✓	–	–	15

Card Specification

Non-Avaya cards can be used in the Optional SD slot as long as they match or exceed the standard below:

Note: This task requires a PC with an SD card read/write drive attached and IP Office Manager IP Office Essential Edition - PARTNER® Version software installed

Only this method should be used for formatting an Avaya SD card. Using IP Office IP Office Essential Edition - PARTNER® Version Manager ensures that special files required for IP Office Essential Edition - PARTNER® Version operation are created and that the Feature Key information is retained.

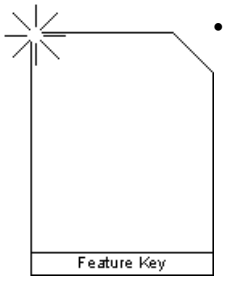

- WARNING: All File Will Be Erased
  Note that this action will erase any existing files and folders on the card. Once a card has been formatted, the folders and files required for IP Office Essential Edition - PARTNER® Version operation can be loaded onto the card from the Manager PC using the Recreate IP Office SD Card command.

  1. Insert the SD card into a reader slot on the Manager computer.
  2. From Manager main menu, select File | Advanced | Format IP Office SD Card.
  3. Select IP Office Partner Version. This selection just sets the card label shown when viewing the card details. It does not affect the actual formatting. Select the label that matches the files set you will be placing on the card.
  4. Browse to the card location and click OK.
  5. The status bar at the bottom of Manager displays the progress of the formatting process.
  6. When the formatting is complete, you can use the Recreate IP Office SD Card command to load the IP Office folders and files onto the card from the Manager PC.

Format rules: SDHC minimum 4GB FAT32 format (Single partition, SDHC, class2+, FAT32, SPI & SD bus).

SD Card Folders

The System SD card contains the following folders:

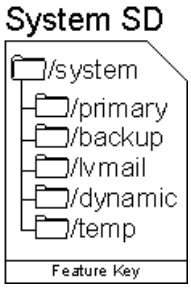

- /primary
  Contains the firmware files for the IP Office control unit, external expansion modules and supported phones. The folder can also contain music on hold files and license key files. This is the main set of files used by the IP Office system when booting up. Also contains the stored copy of the IP Office configuration.
- /backup
  Contains a copy of the primary folder at some previous point. A backup copy of the primary contents to this folder can be invoked manually (using Manager or SSA) or as part of the IP Office software upgrade using Manager.
- /lvmail
  Contains the system prompts used by embedded voicemail. Note that the mailbox messages and greetings are stored in a sub-folder of the /dynamic folder.
  - The sub-folder /AAG is used to store embedded voicemail auto-attendant greetings.
- /doc
  Contains initial installation documentation for IP Office and Avaya IP Office Essential Edition Partner Version.
- /dynamic
  Contains files used by the IP Office and retained through a reboot of the IP Office system.
  - The sub-folder /lvmail is used to store individual user and group mailbox messages, name recordings and announcements. The storage capacity for embedded voicemail is limited to 15 hours regardless of the capacity of the card.
- /temp
  Contains temporary files used by the IP Office and not retained through a reboot of the IP Office system.

The Optional SD card can contain a similar set of folders. These are used as an additional backup or they can be used as the source for upgrading the contents of the System SD card.

6.1 Booting from the SD Cards

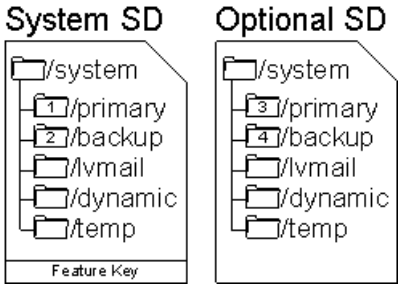

When being powered up, the IP500 V2 control unit look for valid ip500V2.bin file to load in the following order.

1. System SD card */primary* folder.
2. System SD card */backup* folder.
3. Optional SD card */primary* folder.
4. Optional SD card */backup* folder.

- If no file is found, the control unit will fallback to making BOOTP requests to the network. IP Office Manager can respond the BOOTP request.

Once an ip500v2.bin file is found, the IP Office control unit will load that firmware and then continue its startup as follows:

- The folder from which the control unit file was loaded is used to load further firmware files for the the external expansion modules and if necessary phones.
- The folder from which the control unit file was loaded is used for the configuration file. If no configuration file is already present in that folder, a default configuration file is created and placed into that folder.
- The card from which the control unit file was loaded is used all other file operations including embedded voicemail if being used.

The following apply if the IP500 V2 boots using software other than that in its System SD /primary folder:

- An alarm will be shown in the System Status Application. It will also generate an alarm if the card in any slot is not compatible. These alarms are also output as SNMP, Syslog or email alarms.
- The IP Office Manager Select IP Office menu will display an ⚠ icon indicating that the IP Office system is running using software other than from the System SD card's primary folder.
- The configuration can be read but will be read only. Attempting to send a configuration to the system will cause the error message *Failed to save configuration data. (Internal error)*.

Bypassing the System SD Card Primary Folder

The control unit can be forced to bypass the System SD card's */primary* folder when starting. This is done by pressing the Aux button while applying power to the control unit.

This action may be necessary if, following an upgrade of the IP Office system, it is determined that a roll back to the previously backed up firmware and configuration is required. Using the Aux button should restore system operation using the */backup* while the installer then restores the contents of the */primary* folder to a previous release.

6.2 Creating an IP Office SD Card

The processes below can be applied to Avaya IP Office SD cards. They can also be applied to non-Avaya SD cards for use in a system's Optional SD card slot.

The card must be the following format. For the System SD slot, only Avaya SD cards with a Feature Key should be used.

Note: This task requires a PC with an SD card read/write drive attached and IP Office Manager IP Office Essential Edition - PARTNER® Version software installed

Only this method should be used for formatting an Avaya SD card. Using IP Office IP Office Essential Edition - PARTNER® Version Manager ensures that special files required for IP Office Essential Edition - PARTNER® Version operation are created and that the Feature Key information is retained.

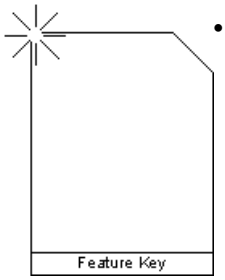

- WARNING: All File Will Be Erased
  Note that this action will erase any existing files and folders on the card. Once a card has been formatted, the folders and files required for IP Office Essential Edition - PARTNER® Version operation can be loaded onto the card from the Manager PC using the Recreate IP Office SD Card command.

  1. Insert the SD card into a reader slot on the Manager computer.
  2. From Manager main menu, select File | Advanced | Format IP Office SD Card.
  3. Select IP Office Partner Version. This selection just sets the card label shown when viewing the card details. It does not affect the actual formatting. Select the label that matches the files set you will be placing on the card.
  4. Browse to the card location and click OK.
  5. The status bar at the bottom of Manager displays the progress of the formatting process.
  6. When the formatting is complete, you can use the Recreate IP Office SD Card command to load the IP Office folders and files onto the card from the Manager PC.

Format rules: SDHC minimum 4GB FAT32 format (Single partition, SDHC, class2+, FAT32, SPI & SD bus).

- WARNING
  Avaya supplied SD cards should not be formatted using any other method than the format commands within IP Office Manager and IP Office System Status Application. Formatting the cards using any other method will remove the feature key used for IP Office licensing from the card.

Creating a Card on a Local PC

These processes can be run on an SD card inserted in a card reader on the IP Office Manager PC. That card can then be used in the System SD card slot of a new system or in the Optional SD card slot of an existing system to upgrade that system.

Formatting an SD Card

Avaya SD cards should only be formatted using the format options provided within IP Office applications. .

- WARNING: All File Will Be Erased
  Note that this action will erase any existing files and folders on the card. Once a card has been formatted, the folders and files required for IP Office operation can be loaded onto the card from the Manager PC using the Recreate IP Office SD Card command.

1. Insert the SD card into a reader slot on the Manager computer.
2. Using IP Office Manager, select File | Advanced | Format IP Office SD Card.
3. Select IP Office A-Law, IP Office U-Law or IP Office Partner Version. This selection just sets the card label shown when viewing the card details. It does not affect the actual formatting. Select the label that matches the files set you will be placing on the card.
4. Browse to the card location and click OK.
5. The status bar at the bottom of Manager will display the progress of the formatting process.
6. When the formatting is complete, you can use the Recreate IP Office SD Card command to load the IP Office folders and files onto the card from the Manager PC.

Recreating an IP Office SD Card

This process will create the folder structure on the SD card and copy the necessary firmware files from those installed with Manager onto the SD card. This includes the binary files for the IP Office 500v2 system, any external expansion modules and phones. It also includes the prompt files for embedded voicemail operation.

This process can be used to upgrade an existing SD card to match the file set installed with Manager. For the card to be used in an IP Office 500v2 system System SD slot the card must be Avaya SD Feature Key card. The card must be correctly formatted (see Format IP Office SD card).

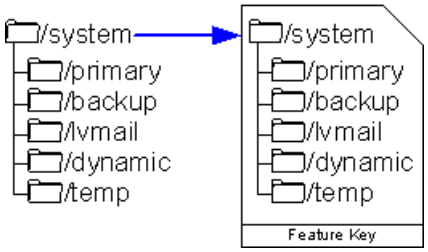

1. Note: This process can take up to 20 minutes depending on the PC. Once started it is recommended that the process is not interrupted.
2. Insert the SD card into a reader slot on the Manager computer.
3. Using Manager, select File | Advanced | Recreate IP Office SD Card.
4. Select IP Office Partner Version. This selection will affect how the IP Office Essential Edition - PARTNER® Version system operates when defaulted with this card present in its System SD card slot. .
5. Browse to the card location and click OK.
6. Manager starts creating folders on the SD card and copying the required files into those folders.

6.3 Viewing the Card Contents

Using IP Office Manager you can view the folders and files on the System SD card and the Optional SD card. You can then use various commands to upload and download files to and from the cards.

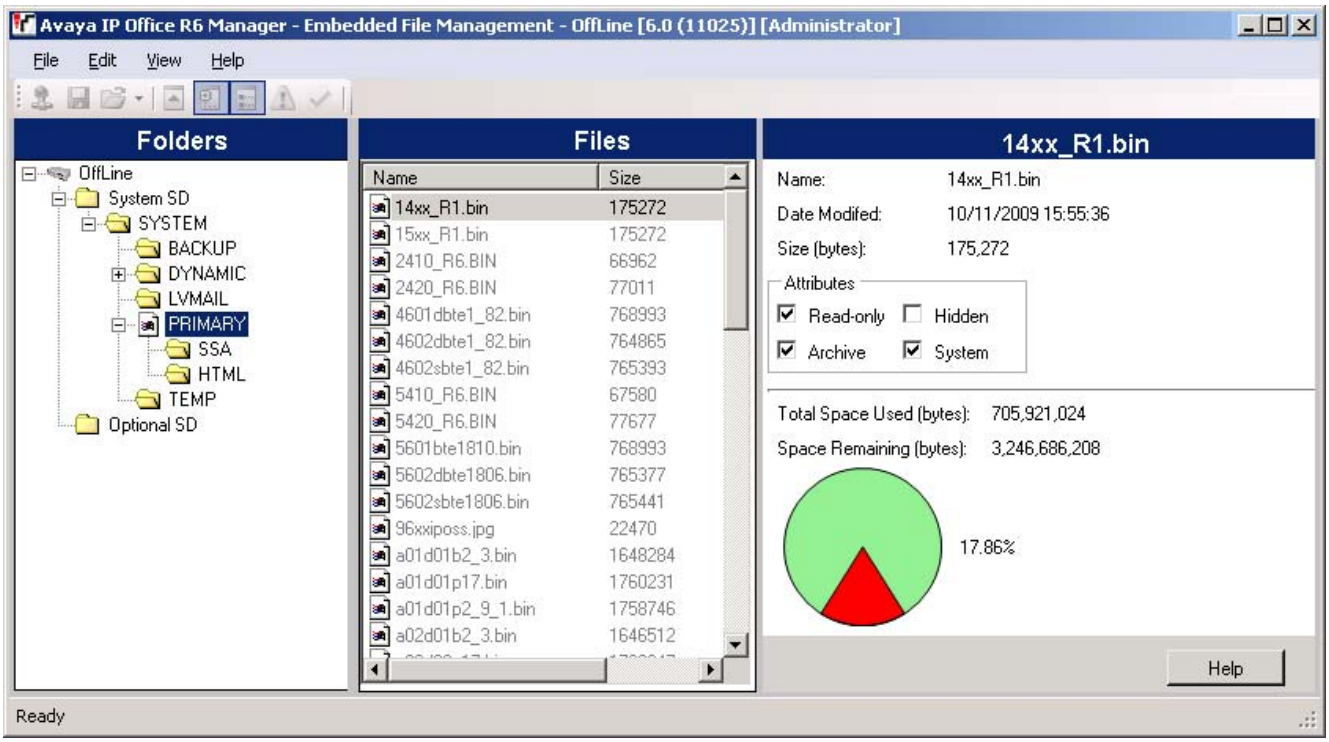

1. Using Manager main menu, select File | Advanced | Embedded File Management.
2. From the Select IP Office dialog, tick the box beside the IP Office Essential Edition - PARTNER® Version system you want to work with.
3. The file contents of the memory cards are displayed.

6.4 Backing Up the System SD Card

There are two levels of backup that can be performed.

- Backup the System SD Card Primary Folder
  The contents of the primary folder on the card can be copied to the backup folder. They files can then be restored if necessary. Both actions can be performed remotely.
- Backup the Whole System SD Card
  The contents of the whole System SD card can be copied to the Optional SD card. While this can be done remotely, the contents can only be copied back manually using a card reader.

The backup, restore and copy operations will not be performed if the destination card has insufficient space for the files being copied.

6.4.1 Backing Up the Primary Folder

This process copies the contents of the /primary folder on the System SD card over the /backup folder. Any files with matching file names will be replaced.

This takes approximately 6 minutes.

Using IP Office Manager

1. Using Manager main menu, select File | Advanced | Embedded File Management.
2. From the Select IP Office dialog, tick the box beside the IP Office Essential Edition - PARTNER® Version system you want to work with.
3. The file contents of the memory cards are displayed.
4. Select File | Backup System Files.
   - The contents of the /primary folder on the System SD card will be copied to the /backup folder. This process takes approximately 6 minutes.

Using the System Status Application

1. Start System Status and access the IP Office's status output.
2. In the navigation panel select System.
3. At the bottom of the screen select Backup System Files.
   - The contents of the /primary folder on the System SD card will be copied to the /backup folder. This process takes approximately 6 minutes.

Using a System Phone

This process can be used by a user configured as a System Phone user and using a 1400, 1600, 2400, 4600, 5400, 5600 or 9600 Series phone (excluding XX01, XX02 and XX03 models). The user's Login Code is used to restrict access to system administration functions on the phone.

1. Select Features | Phone User | System Admin.
2. Enter your IP Office user login code.
3. From the menu select Memory Card.
4. Select System Backup.
   - The contents of the /primary folder on the System SD card will be copied to the /backup folder. This process takes approximately 6 minutes.

6.4.2 Restore from the Backup Folder

The contents of the /backup folder on the System SD card can be copied to the /primary folder. Any files with matching file names will be replaced. The IP Office is then restarted using the files now in the /primary folder.

- ⚠ WARNING
  These processes will cause the IP Office system to be restarted, disconnecting any current calls and services in progress.

Using IP Office Manager

1. Using Manager main menu, select File | Advanced | Embedded File Management.
2. From the Select IP Office dialog, tick the box beside the IP Office Essential Edition - PARTNER® Version system you want to work with.
3. The file contents of the memory cards are displayed.
4. Select File | Backup System Files.
   - The contents of the /backup folder on the System SD card will be copied to the /primary folder. The process takes approximately 6 minutes.
   - When the process has been completed, the IP Office system will be restarted.

Using the System Status Application

1. Start System Status and access the IP Office's status output.
2. In the navigation panel select System.
3. At the bottom of the screen select Restore System Files.
   - The contents of the /backup folder on the System SD card will be copied to the /primary folder. The process takes approximately 6 minutes.
   - When the process has been completed, the IP Office system will be restarted.

Using a System Phone

This process can be used by a user configured as a System Phone user and using a 1400, 1600, 2400, 4600, 5400, 5600 or 9600 Series phone (excluding XX01, XX02 and XX03 models). The user's Login Code is used to restrict access to system administration functions on the phone.

1. Select Features | Phone User | System Admin.
2. Enter your IP Office user login code.
3. From the menu select Memory Card.
4. Select System Restore.
   - The contents of the /backup folder on the System SD card will be copied to the /primary folder. The process takes approximately 6 minutes.
   - When the process has been completed, the IP Office system will be restarted.

6.4.3 Backing Up to the Optional Card

This process copies all files on the System SD card to the Optional SD card. It includes the /primary and /backup folders and the embedded voicemail files including message files. Any matching files and folders on the Optional SD card are overwritten.

The process is a simple copy. Any files already copied that change while the process are not recopied. Any new files added (for example voicemail messages) while the process is running may not be copied.

This process takes at least 90 minutes and may take much longer depending on the amount of data to be copied, for example it will be longer if embedded voicemail is being used by the IP Office system to take messages.

Using IP Office Manager

1. Using Manager main menu, select File | Advanced | Embedded File Management.
2. From the Select IP Office dialog, tick the box beside the IP Office Essential Edition - PARTNER® Version system you want to work with.
3. The file contents of the memory cards are displayed.
4. Select File | Copy System Card.
   - The contents of the System SD card will be copied to the Optional SD card. This process at least 90 minutes and can take much longer.

Using the System Status Application

1. Start System Status and access the IP Office's status output.
2. In the navigation panel select System.
3. Select Memory Cards.
4. Select System Card.
5. At the bottom of the screen select Copy System Card.
   - The contents of the System SD card will be copied to the Optional SD card. This process at least 90 minutes and can take much longer.

Using a System Phone

This process can be used by a user configured as a System Phone user and using a 1400, 1600, 2400, 4600, 5400, 5600 or 9600 Series phone (excluding XX01, XX02 and XX03 models). The user's Login Code is used to restrict access to system administration functions on the phone.

1. Select Features | Phone User | System Admin.
2. Enter your IP Office user login code.
3. From the menu select Memory Card.
4. Select Copy.
   - The contents of the System SD card will be copied to the Optional SD card. This process at least 90 minutes and can take much longer.

6.4.4 Restoring from the Optional Card

The files in the /primary folder on the Optional SD card can be copied to the /primary folder on the System SD card. Any files with matching file names will be replaced. The IP Office is then restarted using the files now in the System SD card's /primary folder.

The restore process is separated into two parts, either copying configuration files from the Optional SD card or copying software files from the Optional SD card. This allows software files to be copied from an Optional SD card without affecting the existing configuration of that system.

- WARNING
  These processes will cause the IP Office system to be restarted, disconnecting any current calls and services in progress.

6.4.4.1 Restoring a Configuration from an Optional Card

The following processes copy the configuration file (*config.cfg*) and licenses file (*keys.txt*). The processes take a few seconds.

- WARNING
  These processes will cause the IP Office system to be restarted, disconnecting any current calls and services in progress.

Copying a Configuration from the Optional SD Card File Using IP Office Manager

1. Using Manager main menu, select File | Advanced | Embedded File Management.
2. From the Select IP Office dialog, tick the box beside the IP Office Essential Edition - PARTNER® Version system you want to work with.
3. The file contents of the memory cards are displayed.
4. Select File | Upgrade Configuration.
   - The configuration file (*config.cfg*) and licenses file (*keys.txt*) in the */primary* folder on the Optional SD card are copied to the */primary* folder on the System SD card. This process takes approximately a few seconds.
   - When the process has been completed, the IP Office system will be restarted.

Copying a Configuration File from the Optional SD Card Using a System Phone

This process can be used by a user configured as a System Phone user and using a 1400, 1600, 2400, 4600, 5400, 5600 or 9600 Series phone (excluding XX01, XX02 and XX03 models). The user's Login Code is used to restrict access to system administration functions on the phone.

1. Select Features | Phone User | System Admin.
2. Enter your IP Office user login code.
3. From the menu select Memory Card.
4. Select Upgrade Config....
   - The configuration file (*config.cfg*) and licenses file (*keys.txt*) in the */primary* folder on the Optional SD card are copied to the */primary* folder on the System SD card. This process takes approximately a few seconds.
   - When the process has been completed, the IP Office system will be restarted.

6.4.4.2 Restoring Software from an Optional SD Card

These processes copy all files in the folder except the configuration file (*config.cfg*) and licenses file (*keys.txt*). The processes take approximately 5 minutes. These process do not restore embedded voicemail prompts (see Upgrading Card Software).

- IP Office Technical Bulletins
  Ensure that you have obtained and read the IP Office Technical Bulletin relating to the IP Office software release which you are installing. This bulletin will contain important information that may not have been included in this manual. IP Office Technical Bulletins are available from the Avaya support website (*http://support.avaya.com*).

- Upgrade Licenses
  Some upgrades may require entry of upgrade licenses.

- WARNING
  These processes will cause the IP Office system to be restarted, disconnecting any current calls and services in progress.

Copying Software Files from the Optional SD Card Using IP Office Manager

1. Using Manager main menu, select File | Advanced | Embedded File Management.
2. From the Select IP Office dialog, tick the box beside the IP Office Essential Edition - PARTNER® Version system you want to work with.
3. The file contents of the memory cards are displayed.
4. Select File | Upgrade Binaries.
   - The software files (all files in the folder except the configuration file (*config.cfg*) and licenses file (*keys.txt*)) in the */primary* folder on the Optional SD card are copied to the */primary* folder on the System SD card. This process takes approximately 5 minutes.
   - When the process has been completed, the IP Office system will be restarted.

Copying Software Files from the Optional SD Card Using a System Phone

This process can be used by a user configured as a System Phone user and using a 1400, 1600, 2400, 4600, 5400, 5600 or 9600 Series phone (excluding XX01, XX02 and XX03 models). The user's Login Code is used to restrict access to system administration functions on the phone.

1. Select Features | Phone User | System Admin.
2. Enter your IP Office user login code.
3. From the menu select Memory Card.
4. Select Upgrade Binaries....
   - The software files (all files in the folder except the configuration file (*config.cfg*) and licenses file (*keys.txt*)) in the */primary* folder on the Optional SD card are copied to the */primary* folder on the System SD card. This process takes approximately 5 minutes.
   - When the process has been completed, the IP Office system will be restarted.

6.5 Upgrading Card Software

In addition to using the traditional IP Office Upgrade Wizard, IP500 V2 control units can be upgraded by loading the required set of firmware files onto the System SD card and rebooting the system.

- ⚠ IP Office Technical Bulletins
  Ensure that you have obtained and read the IP Office Technical Bulletin relating to the IP Office software release which you are installing. This bulletin will contain important information that may not have been included in this manual. IP Office Technical Bulletins are available from the Avaya support website *(http://support.avaya.com)*.
- ⚠ Upgrade Licenses
  Some upgrades may require entry of upgrade licenses.
- ⚠ WARNING
  These processes will cause the IP Office system to be restarted, disconnecting any current calls and services in progress.

There are a number of ways in which this can be done.

Method	Description	Location	Software Files	Embedded Voicemail Prompts
Using Manager	Using IP Office Manager, the contents of the card are compared to the files that Manager has available and are upgraded if necessary.	Local or Remote	✓	✓
System SD Card Upgrade	In this method, the System SD card is shut down and removed from the control unit. The card's contents are upgraded using IP Office Manager.	Local	✓	✓
Upgrade from Optional SD Card	This method uses an SD card loaded with the required version of IP Office software. The card is inserted into the control unit and then Manager, System Status or a system phone is used to transfer the software to the System SD card.	Local	✓	–

6.5.1 Upgrading Remotely Using Manager

This process will copy all system files not present or of a different version compared to those already present on the System SD card. That includes IP Office software files and embedded voicemail prompt files.

1. Using Manager main menu, select File | Advanced | Embedded File Management.
2. From the Select IP Office dialog, tick the box beside the IP Office Essential Edition - PARTNER® Version system you want to work with.
3. The file contents of the memory cards are displayed.
4. Select File | Backup System Files. The contents of the /primary folder on the System SD card will be copied to the /backup folder. This process takes approximately 6 minutes.
5. Select File | Upload System Files. The system files that Manager has will be uploaded to the /primary folder on the System SD card. This includes IP Office software files and embedded voicemail prompt files. Depending on the files that need to be updated, this process can take up to 40 minutes.

6.5.2 Upgrading the SD Card Locally

The following process can be used if you have physical access to the IP500 V2 control unit. This method be used with a timed reboot, allowing the card upgrade to be done during normal operation hours followed by a reboot outside of normal operation hours.

If the card is being used for embedded voicemail, that service is not available while the card is shutdown. Licensed features however will continue running for up to 2 hours while the card is shutdown.

1. Shutdown the System SD memory card and remove it from the control unit.
2. Follow the process for recreating the SD card. This process will overwrite the software files on the card with the files available to IP Office Manager. It will not affect any other files, for example the configuration file. This process takes approximately 15 minutes.
3. When the recreate process has completed, reinsert the card into the control unit's System SD card slot.
4. Using IP Office Manager select File | Advanced | Reboot.
5. In the Select IP Office menu, select the IP500 V2 system and click OK.
6. Select the type of reboot that you want performed and click OK.
7. When the system is rebooted, as it restarts it will load the software files in the primary folder of the System SD card.

6.5.3 Upgrading Using an Optional SD Card

This method allows an Optional SD card to be used as the source from which the System SD card is upgraded. It only upgrades the software files, it does not update embedded voicemail prompts.

1. Once started do not interrupt this process, for example by removing the SD card. This process takes approximately 15 minutes.
2. Insert the SD card into a card reader on the Manager PC.
3. Using IP Office Manager, select File | Advanced | Recreate IP Office SD Card.
4. Select IP Office A-Law, IP Office U-Law or IP Office Partner Version. This selection will affect how the IP Office systems operates when defaulted with this card present in its System SD card slot. .
5. Browse to the card location and click OK.
6. Manager will start creating folders on the SD card and copying the required files into those folders. This process will take approximately 15 minutes. Do not remove the SD card during the process. Wait until the Manager status bar at the bottom shows a *"Ready"* message.
7. Insert the card into the control unit's Optional SD card slot.
8. Use one of the processes below to copy the software from the Optional SD card to the System SD card. Each of those processes will cause the IP Office system to be restarted.

Copying Software Files from the Optional SD Card Using IP Office Manager

1. Using Manager main menu, select File | Advanced | Embedded File Management.
2. From the Select IP Office dialog, tick the box beside the IP Office Essential Edition - PARTNER® Version system you want to work with.
3. The file contents of the memory cards are displayed.
4. Select File | Upgrade Binaries.
   - The software files (all files in the folder except the configuration file (*config.cfg*) and licenses file (*keys.txt*)) in the */primary* folder on the Optional SD card are copied to the */primary* folder on the System SD card. This process takes approximately 5 minutes.
   - When the process has been completed, the IP Office system will be restarted.

Copying Software Files from the Optional SD Card Using a System Phone

This process can be used by a user configured as a System Phone user and using a 1400, 1600, 2400, 4600, 5400, 5600 or 9600 Series phone (excluding XX01, XX02 and XX03 models). The user's Login Code is used to restrict access to system administration functions on the phone.

1. Select Features | Phone User | System Admin.
2. Enter your IP Office user login code.
3. From the menu select Memory Card.
4. Select Upgrade Binaries....
   - The software files (all files in the folder except the configuration file (*config.cfg*) and licenses file (*keys.txt*)) in the */primary* folder on the Optional SD card are copied to the */primary* folder on the System SD card. This process takes approximately 5 minutes.
   - When the process has been completed, the IP Office system will be restarted.

6.6 Removing SD Cards

SD Card Removal

SD cards should never be removed while being used. Though the SD card slot LEDs indicate when data is being written to an SD card, lack of flashing LED is not a sufficient safeguard. The IP Office Manager provides methods to shutdown and restart an individual card or to shutdown the system in order to allow removal of an SD card. If the System SD card is removed, licensed features will continue operating for up to 2 hours.

The following processes can be used with SD cards installed in IP500 V2 control units and also with Compact Flash memory cards installed in IP406 V2 control units.

6.6.1 Card Shutdown

Before a memory card is removed from an IP Office Essential Edition - PARTNER® Version system that is running, the card should be shutdown. Removing a memory card while the system is running may cause file corruption.

Shutting down the memory card disables all services provided by the card including embedded voicemail. Features licensed by the memory card will continue to operate for up to 2 hours.

Card services can be restarted by either reinserting the card or using a Start Up command.

Card Shutdown Using Manager

1. Using IP Office Manager, select File | Advanced | Memory Card Commands | Shutdown.
2. In the Select IP Office dialog, select the IP Office system containing the memory card.
3. Click OK.
4. At the back of the control unit, confirm that the memory card LED is off.
5. The card can now be removed in order to perform the necessary maintenance actions.

6.6.2 Card Startup

Reinserting a card into a system that is already switched on will automatically restart the card. Similarly reinserting the card and rebooting the IP Office Essential Edition - PARTNER® Version system will restart the card. However, if the card has been shutdown but not removed, it can be restarted using Manager without requiring a reboot.

Card Startup Using Manager

1. Using IP Office Manager, select File | Advanced | Memory Card Commands | Startup.
2. Using the Select IP Office menu, select the IP Office system containing the memory card.
3. Click OK.

6.6.3 System Shutdown

IP Office can be shut down in order to perform maintenance. The shut down can be either indefinite or for a set period of time after which the IP Office will automatically reboot.

During the shut down process, the current configuration in the control unit RAM memory is copied to the control units non-volatile memory.

The SD memory card can be shutdown and restarted separately from the system.

- ⚠ WARNING
  When shutdown the system cannot be used to make or receive any calls. This is not a polite shutdown, any users calls and services in operation will be stopped.

System Shutdown Using Manager

1. Using IP Office Manager, select File | Advanced | System Shutdown.
2. Using the Select IP Office menu, select the system to be shutdown by activating its checkbox.
3. You will be prompted for log in details
4. Select the shutdown mode. If Indefinite is used, the system can only be restarted by having its power switched off and then on again. If a Timed shutdown is selected, the IP Office will reboot after the set time has elapsed.

System Shutdown Using System Status

1. Start System Status and access the status output of IP Office.
2. In the navigation panel select System.
3. At the bottom of the screen select Shutdown System.
4. Select the time duration for the shutdown or indefinite.

System Shutdown Using a System Phone

This process can be used by any user configured as a System Phone user and using a 1400 Series phone. The user's Login Code is used to restrict access to system administration functions on the phone.

Unlike Manager, a system phone user cannot select an indefinite shutdown. The can set a timed shut down of between 5 minutes and 24 hours.

1. Select Features | Phone User | System Admin.
2. From the menu select System Shutdown.
3. Select a time period for the shutdown. It must be in between 5 minutes and 24 hours.
4. Press Done and then Confirm to begin the shutdown.

Chapter 7.
System Component Details

7. System Component Details

7.1 Control Unit

The slots are numbered 1 to 4 from left to right. They can be used in any order. However if the capacity for a particular type of card is exceeded, the card in the rightmost slot will be disabled. The unit must not be used with uncovered slots.

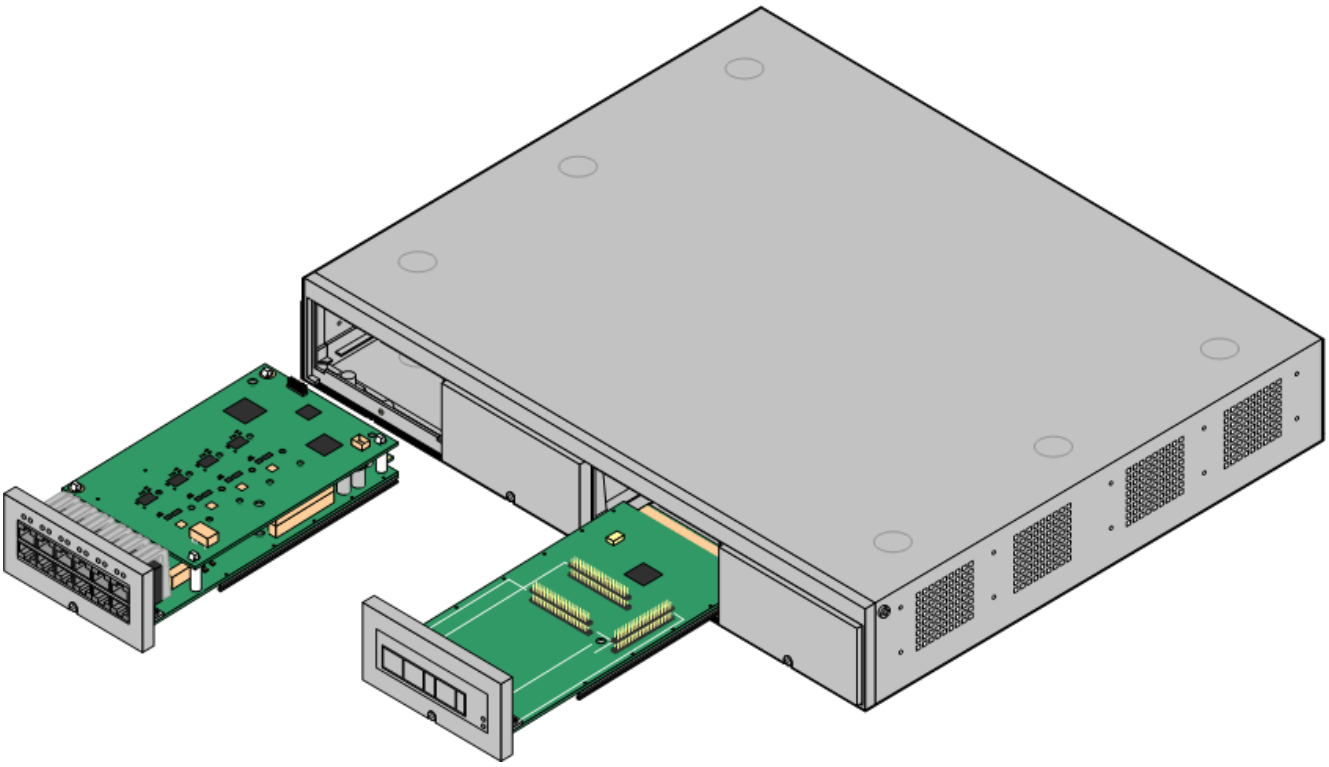

Feature	Capacity
Maximum Extensions	Up to 48 in Partner Version mode.
Conference Parties	128 as standard but maximum 64 in any individual conference. Silence suppression is applied to conferences with more than 10 parties.
Trunks Cards	4. Any combination of IP500 trunk daughter cards.
VCM Card Slots	Up to a maximum of 20 using IP500 Analog Combination cards.
Voicemail Channels	Maximum 6. 3 unlicensed. Additional ports enabled by addition of licenses.
Locales	Supported in all IP Office locales.
Software Level	• IP Office core software level 6.0 minimum. Bin file = ip500v2.bin.
Power Supply	Internal power supply unit.
Mounting	Free-standing, rack mounted (requires IP500 Rack Mounting Kit) or wall mounted (requires IP500 Wall Mounting Kit).
Dimensions	Width: 445mm/17.5". Depth: 365mm/14.4". Height: 73mm/2.9"/2U. Clearance: 90mm minimum all sides, 220m at front. 500mm all side when wall mounted.
Memory	Maximum configuration file size: 2048KB.

Name	Description	Country	SAP Code
IPO 500 V2 Base Unit	IP Office 500 V2 Base Unit		700476005
Avaya SD Memory Card	IPO System SD Card Partner		700479728
IEC60320 C13 Earthed Power Cord 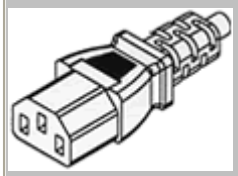	NEMA5-15P	America	700289770
IP500 Rack Mounting Kit	IP500 Rack Mounting Kit		700429202
IP500 Wall Mounting Kit	IP500 Wall Mounting Kit		700430150
IP500 Blanking Plate Kit	IP500 Blanking Plate Kit		700429194

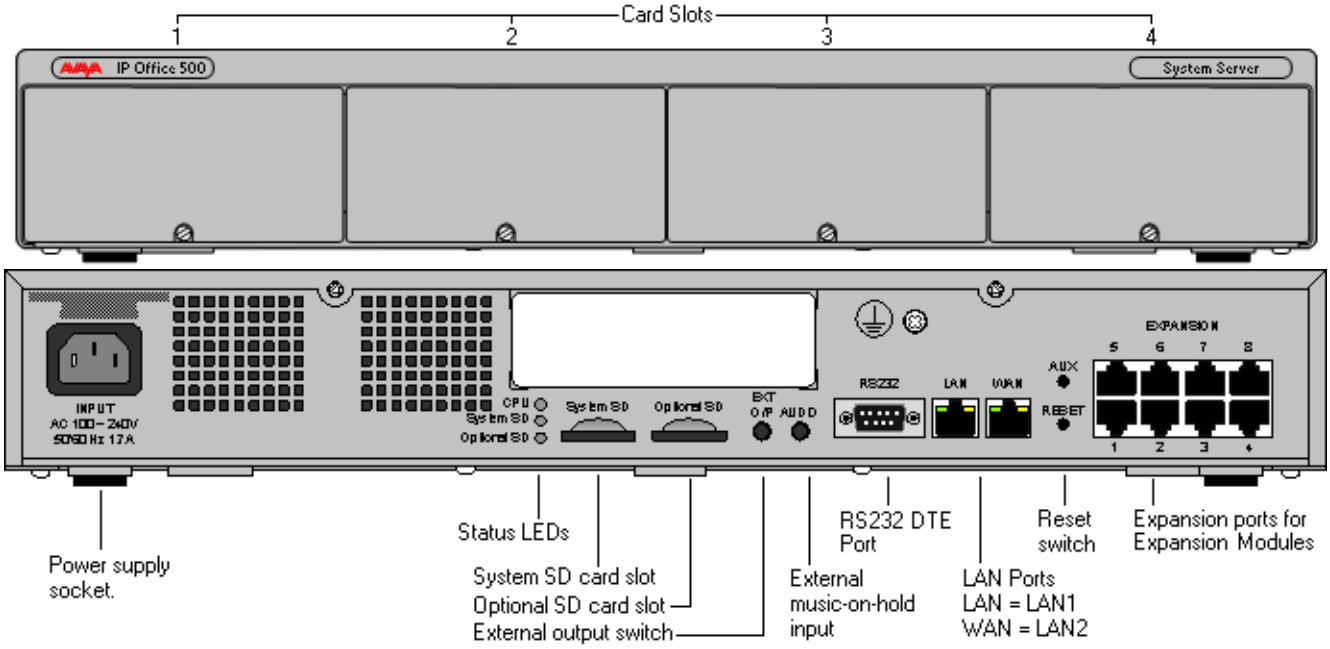

Ports	Description
AUDIO	3.5mm Stereo jack socket. Used for external music on hold source input.
AUX	If pressed during a restart of the control unit, the control unit skip booting from the */primary* folder on the System SD card. If pressed for between 5 and 10 seconds when a system is running, the control unit will shutdown for 10 minutes.
CPU	Indicates the status of the control unit. • Alternate red/green = Starting up. • Green on = Okay. • Red on = No software. • Flashing Red = Error/Shutdown.
EXPANSION	RJ45 socket. Used for direct connection to external expansion modules using the Expansion Interconnect cable supplied with the expansion module.
EXT O/P	3.5mm Stereo jack socket. Used for switching external relay systems such as door entry controls. The port contains two independent switches controlled by the IP Office.
INPUT	AC power input port.
LAN	RJ45 socket. With the WAN port forms a managed layer 3 Ethernet switch. The ports are full-duplex 10/100Mbps auto-sensing, MDI crossover ports.
Optional SD	Used for the Optional SD card. The LED is used in the same way as for the System SD *(see below)*.
RESET	This switch is used to restart the IP Office, optionally erasing the configuration and or the core software in the process. See Reset Button.
RS232	9-Way D-Type socket. Used for system maintenance.
System SD	Used for the System SD card,. The LED is used as follows. • Off = Card shutdown. • Green on = Card present. • Green flashing = Card in use. • Orange steady = Reset imminent. • Red flashing = Card initializing or shutting down. • Red fast flashing = Card full • Red steady = Card failure/wrong type.
WAN	RJ45 socket. With the LAN port forms a managed layer 3 Ethernet switch. The ports are full-duplex 10/100Mbps auto-sensing, MDI crossover ports.
⏚	Used for connection of a function or protective ground. Use of a ground for all systems is recommended and for some locales may be a regulatory requirement.

7.2 SD Card

This type of feature key is used with IP500 V2 control units and is a mandatory item. The control unit must be fitted with one of these feature keys even if no licenses are being used.

This type of feature key is also a memory card used for other system functions and to provide embedded voicemail if required.

- By default the card can be used for 2 ports of embedded voicemail. Additional ports up to a maximum of 6 can be enabled by the addition of licenses. The voicemail mailbox message and prompt capacity is limited to 15 hours regardless of the card capacity.
- ⚠ WARNING
  These cards should only be formatted using IP Office Manager or IP Office System Status Application. The cards should only be removed from a system after either a card shut down or a system shut down.

Feature Key Dongle	SAP Code
IP500 V2 SD Card - Partner	700479728

7.3 Base Cards

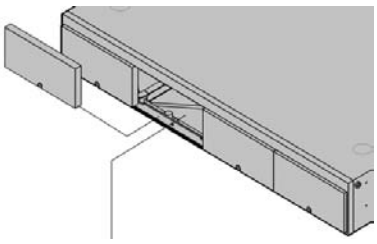

The control unit has 4 slots for the insertion of base cards. The slots are numbered 1 to 4 from left to right. Normally they can be used in any order, however if the capacity for a particular type of card is exceeded, the card in the rightmost slot will be disabled.

Each base card includes an integral front panel with ports for cable connections. Typically the first 8 ports on the left are for connection of extension devices. The 4 ports on the left are used for connection of trunks if a trunk daughter card is added to the base card.

IP500 Digital Station Base Card

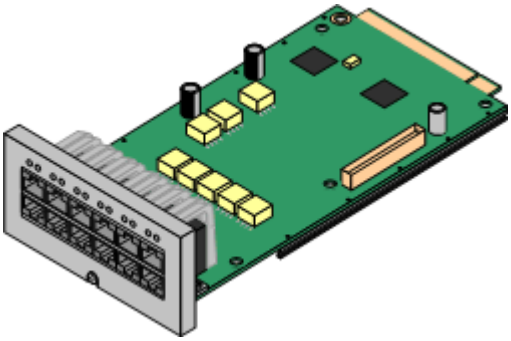

This card provides 8 DS (digital station) ports for the connection of Avaya digital phones other than IP phones.

- The card can be fitted with an IP500 trunk daughter card which uses the base card ports for trunk connection.
- Maximum: 3 per control unit.
- 4400 Series phones (4406D, 4412D and 4424D) are not supported on this card. They are supported on an external expansion module.

IP500 Analog Phone Base Card

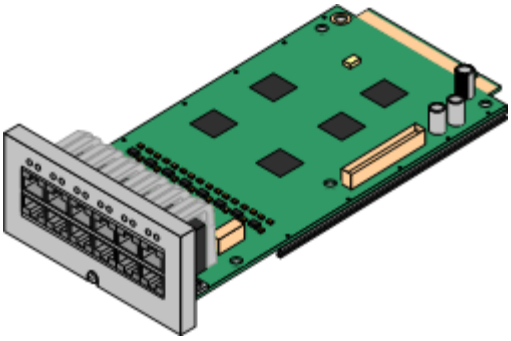

The card is available in two variants, supporting either 2 or 8 analog phone ports.

- The card can be fitted with an IP500 trunk daughter card which uses the base card ports for trunk connection.
- Maximum: 4 per control unit.
- The analog phone ports do not include a ringing capacitor. Where this is a requirement, connection should be via a Master socket containing ringing capacitors.
- If fitted with an IP500 Analog Trunk daughter card, during power failure phone port 8 is connected to analog trunk port 12.

IP500 ATM Combination Card

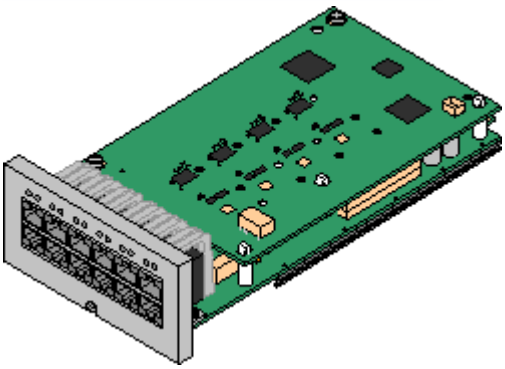

This card provides 6 digital station ports (1-6), 2 analog extension ports (7-8) and 4 analog trunk ports (9-12). The card also includes 10 VCM channels.

- This card has a pre-installed IP500 analog trunk daughter card.
- Maximum: 2 combination cards per IP500 V2 control unit. Not supported by IP500 control units.
- The analog phone ports do not include a ringing capacitor. Where this is a requirement, connection should be via a Master socket containing ringing capacitors.
- If fitted with an IP500 Analog Trunk daughter card, during power failure phone port 8 is connected to analog trunk port 12.

IP500 ETR6 Base Card

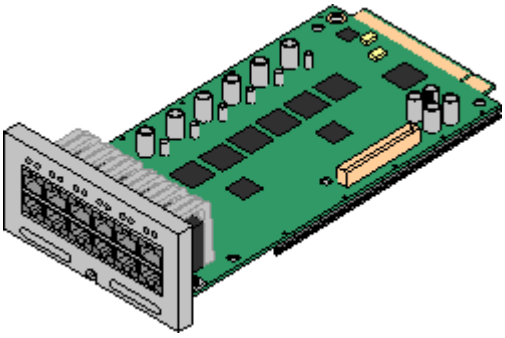

This card provides 6 ETR ports for connection of ETR phones. 2 Analog extension ports are also provided for emergency use only with an analog trunk card.

- The card can be fitted with an IP500 trunk daughter card which uses the base card ports for trunk connection.
- Maximum: 3 per IP500 V2 control unit. Not supported by IP500 control units.
- The analog phone ports do not include a ringing capacitor. Where this is a requirement, connection should be via a Master socket containing ringing capacitors.
- If fitted with an IP500 Analog Trunk daughter card, during power failure phone ports 7 and 8 are connected to analog trunk port 12. However during normal operation analog phone ports 7 and 8 are not useable.

7.3.1 Analog Phone

This card is used to add analog phone extension ports to an IP500 and IP500 V2 control unit. It is available in two variants, providing either 2 or 8 analog extension ports.

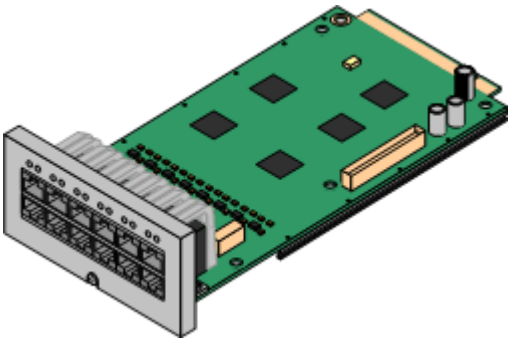

- Supports
  Provides either 8 or 2 analog phone ports depending on card variant.
- Maximum per IP500 Control Unit: 4.
- IP500 Daughter Card Support: ✓ 1.

Features	Port LEDs
Analog Extension: Ports 1 to 8	

• Supports ICLID modes DTMFA, DTMFC, DTMFD, FSK and UK20.
• REN 2 (1 for external bell device).
• Off-Hook current: 25mA
• Ring Voltage: 40V.
• Intended for connection to two-wire analog phones, the ports do not include a ringing capacitor. For connection to 4-wire analog phones, connection should be via a master socket with ringing capacitors.
• If fitted with an analog trunk card, for the Phone 8, during power failure extension port 8 is connected to the analog trunk port 12.
	No status LEDs are used for analog phone extensions.
	• LED1 is used for base card status:
	  • Red On = Error
	  • Red Slow Flash = Initializing.
	  • Red Flash every 5 seconds = Card okay.
	  • Red Fast Flash = System shutdown.

Optional Trunk Card Ports: Ports 9 to 12	

The card can be fitted with one of the following trunk daughter cards. The trunk daughter card then uses ports 9 to 12 on the base card for its trunk connections.
  • IP500 Analog Trunk Card.
  • IP500 PRI Trunk Card.
	LED use depends daughter card type fitted.
	• LED 9 is used for daughter card status.
	  • Red On = Error
	  • Red Slow Flash = Initializing.
	  • Red Flash every 5 seconds = Card okay.
	  • Red Fast Flash = System shutdown.
	Analog Trunk Daughter Card
	• Green on: Card fitted.
	• Green flashing: Trunk in use.
	PRI Trunk Daughter Card
	• Off: No trunk present.
	• Green on: Trunk present.
	• Green flashing: Trunk in use.
	• Red/Green Fast Flash (port 9) or Green Fast Flash (port 10): Alarm indication signal (AIS) from the trunk remote end.
	• Red with Green Blink (port 9) or Green Blink (port 10): Port in loopback mode (set through IP Office System Monitor).

Name	Description	SAP Code
IPO 500 Extn Card Phone 2	IP Office 500 Extension Card Phone 2	700431778
IPO 500 Extn Card Phone 8	IP Office 500 Extension Card Phone 8	700417231

7.3.2 Digital Station

This card is used to add digital station (DS) extension ports to an IP500 and IP500 V2 control unit. It provides 8 RJ45 DS extension ports for use with Avaya digital phones not including IP phones. A further 4 RJ45 ports are provided for trunk connections when an IP500 trunk card is fitted to this card.

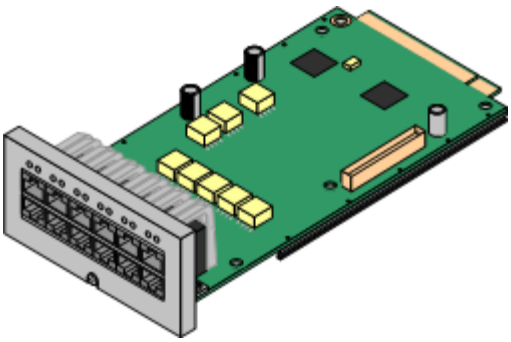

- Supports
  Provides 8 DS ports for digital stations supported (except 4406D, 4412D and 4424D).
- Maximum per IP500 Control Unit: 3.
- IP500 Daughter Card Support: ✓ 1.

Features	Port LEDs
Digit Station: Ports 1 to 8	

Phrase IP500 Analog Ports Provides DS ports for digital stations.	• Green On - Phone detected.
	• LED1 is used for base card status:
	  • Red On = Error
	  • Red Slow Flash = Initializing.
	  • Red Flash every 5 seconds = Card okay.
	  • Red Fast Flash = System shutdown.

Optional Trunk Card: Ports 9 to 12	

The card can be fitted with one of the following trunk daughter cards. The trunk daughter card then uses ports 9 to 12 on the base card for its trunk connections.
• IP500 Analog Trunk Card.
• IP500 PRI Trunk Card.
	LED use depends daughter card type fitted.
	• LED 9 is used for daughter card status.
	  • Red On = Error
	  • Red Slow Flash = Initializing.
	  • Red Flash every 5 seconds = Card okay.
	  • Red Fast Flash = System shutdown.
	Analog Trunk Daughter Card
	• Green on: Card fitted.
	• Green flashing: Trunk in use.
	PRI Trunk Daughter Card
	• Off: No trunk present.
	• Green on: Trunk present.
	• Green flashing: Trunk in use.
	• Red/Green Fast Flash (port 9) or Green Fast Flash (port 10): Alarm indication signal (AIS) from the trunk remote end.
	• Red with Green Blink (port 9) or Green Blink (port 10): Port in loopback mode (set through IP Office System Monitor).

Name	Description	SAP Code
IPO 500 Extn Card Dgtl Sta 8	IP Office 500 Extension Card Digital Station 8	700417330

7.3.3 ETR6 Card

This card is used to add 6 ETR phone extension ports to an IP500 V2 control unit. This card is only supported by IP500 V2 systems running in Partner Version mode.

It also includes 2 analog extension ports which are for emergency use only when the card is fitted with an analog trunk daughter card. A further 4 RJ45 ports (9 to 12) are provided for trunk connections when an IP500 trunk daughter card is fitted to this card.

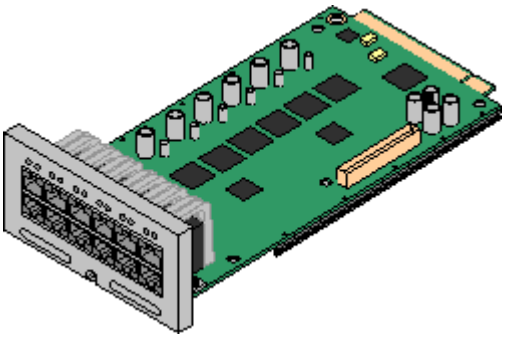

- Supports
  ETR and analog phones.
- Maximum per IP500 Control Unit: 3.
- IP500 Daughter Card Support: ✓ 1.
  The IP500 BRI trunk daughter card is not supported.

Features	Port LEDs
ETR Extensions: Ports 1 to 6	

Each ETR phone can be used for an ETR or analog phone. Support for ETR 34D phone is limited to a maximum of 2 per ETR6 card and 4 in total.
• REN 1.
• DTMF dialing only.
• Message waiting indication 51V stepped.
• ICLID mode Bellcore 202.
	No status LED are used for ETR ports.
	• LED1 is used for base card status:
	  • Red On = Error
	  • Red Slow Flash = Initializing.
	  • Red Flash every 5 seconds = Card okay.
	  • Red Fast Flash = System shutdown.

EF: Ports 7 to 8	
• If fitted with an IP500 Trunk Daughter card, during power failure both these ports are connected to analog trunk port 12. • Supports ICLID modes DTMFA, DTMFC, DTMFD, FSK and UK20. • REN 2 (1 for external bell device). • Off-Hook current: 25mA • Ring Voltage: 40V. • Intended for connection to two-wire analog phones, the ports do not include a ringing capacitor. For connection to 4-wire analog phones, connection should be via a master socket with ringing capacitors.	No status LEDs are used for analog phone extensions.
Optional Trunk: Ports 9 to 12	

Depends on the type of trunk daughter card fitted. The ETR6 can be fitted with either a Analog Trunk card or PRI Trunk card.	LED use depends daughter card type fitted.
	• LED 9 is used for daughter card status.
	  • Red On = Error
	  • Red Slow Flash = Initializing.
	  • Red Flash every 5 seconds = Card okay.
	  • Red Fast Flash = System shutdown.
	Analog Trunk Daughter Card
	• Green on: Card fitted.
	• Green flashing: Trunk in use.
	PRI Trunk Daughter Card
	• Off: No trunk present.
	• Green on: Trunk present.
	• Green flashing: Trunk in use.
	• Red/Green Fast Flash (port 9) or Green Fast Flash (port 10): Alarm indication signal (AIS) from the trunk remote end.
	• Red with Green Blink (port 9) or Green Blink (port 10): Port in loopback mode (set through IP Office System Monitor).

Name	Description	SAP Code
IPO IP500 V2 EXTN CARD ETR6	IPO IP500 V2 EXTN CARD ETR6	700476039

7.3.4 ATM Combination Card

This card is used to add a combination of ports to an IP500 V2 control unit. Not supported by IP500 control units.

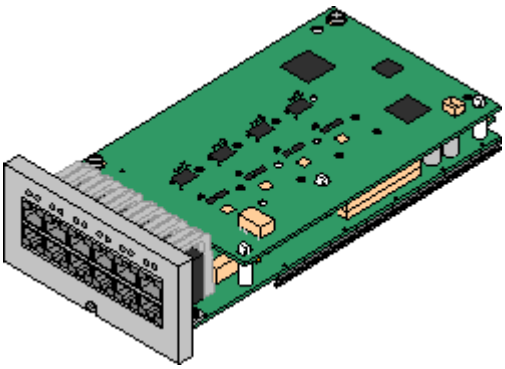

- Supports
  - 6 Digital Station ports.
  - 2 Analog Extension ports.
  - 4 Analog Trunk ports.
  - 10 VCM channels.
- Maximum per IP500 V2 Control Unit: 2.
- IP500 Daughter Card Support: ✓ 1. The trunk daughter card is pre-installed and cannot be replaced with another card type.

Features	Port LEDs
Digit Station: Ports 1 to 6	

Phrase IP500 Analog Ports Provides DS ports for digital stations.	• Green On - Phone detected.
	• LED1 is used for base card status:
	  • Red On = Error
	  • Red Slow Flash = Initializing.
	  • Red Flash every 5 seconds = Card okay.
	  • Red Fast Flash = System shutdown.

Analog Extensions: Ports 7 to 8	
• Supports ICLID modes DTMFA, DTMFC, DTMFD, FSK and UK20. • REN 2 (1 for external bell device). • Off-Hook current: 25mA • Ring Voltage: 40V. • Intended for connection to two-wire analog phones, the ports do not include a ringing capacitor. For connection to 4-wire analog phones, connection should be via a master socket with ringing capacitors. • During power failure extension port 8 is connected to the analog trunk port 12.	No status LEDs are used for analog phone extensions.
Analog Trunk: Ports 9 to 12	

• DTMF, ICLID, Busy tone detection.
• Over-voltage and lightning protection.
• DTMF and LD dialing.
• Adjustable echo cancellation (default 16ms). Selectable to Off, 8, 16, 32, 64 and 128 milliseconds.
	• Green on: Card fitted.
	• Green flashing: Trunk in use.
	• LED 9 is used for daughter card status.
	  • Red On = Error
	  • Red Slow Flash = Initializing.
	  • Red Flash every 5 seconds = Card okay.
	  • Red Fast Flash = System shutdown.

Name	Description	SAP Code
IPO IP500 V2 COMBINATION CARD ATM	IPO IP500 V2 COMBINATION CARD ATM	700476013

7.4 Trunk Cards

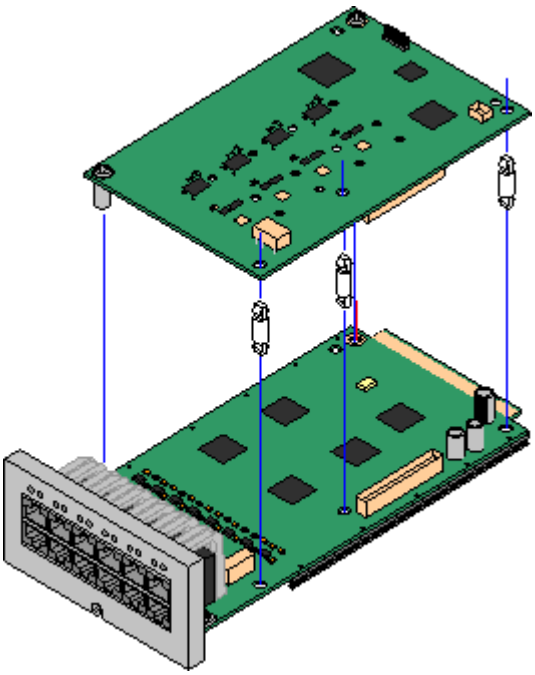

The IP500 base cards can be fitted with an IP500 daughter cards to support the connection of trunks to the base card.

Each daughter card is supplied with the stand off pillars required for installation and a label to identify the daughter cards presence on the front of the base card after installation.

- IP500 Combination cards are pre-fitted with a trunk daughter card which cannot be removed or changed for another type of trunk daughter card.

IP500 Analog Trunk Daughter Card

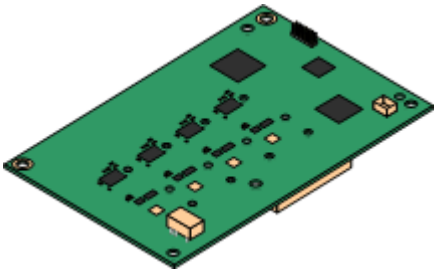

This card allows the base card to support 4 analog loop-start trunks.

- The analog phone ports do not include a ringing capacitor. Where this is a requirement, connection should be via a Master socket containing ringing capacitors.
- If fitted with an IP500 Analog Trunk daughter card, during power failure phone port 8 is connected to analog trunk port 12.
- Maximum: 3 per IP500 control unit.

IP500 PRI-U Trunk Daughter Card

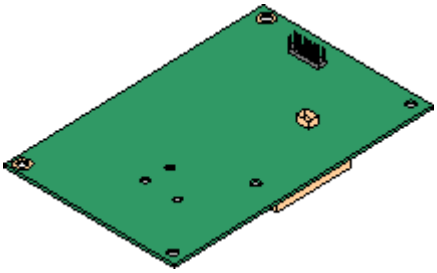

This card allows the base card to support 1 PRI trunk connections. The card is available in single and dual port variants. The card can be configured for T1 robbed bit or T1 PRI.

- Maximum: 1 per IP500 control unit.

7.4.1 Analog Trunk Card

This card can be added to an IP500 base card to provide that card with support for 4 loop-start analog trunks.

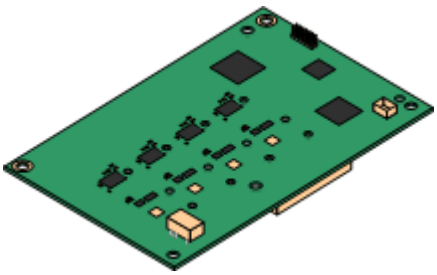

- Ports/Channels
  4 Loop-start analog trunk ports. Connections via the host IP500 base card.
  - DTMF, ICLID, Busy tone detection.
  - Over-voltage and lightning protection (may still require additional protection equipment see Lightning Protection/Out-of-Building Connections.
  - DTMF and LD dialing.
  - Adjustable echo cancellation (default 16ms). Selectable to Off, 8, 16, 32, 64 and 128 milliseconds.
  - Power Failure Port
    Regardless of the IP500 card hosting it, during power failure pins 4 and 5 of port 12 are connected to pins 7 and 8. In addition, when fitted to an IP500 Analog Phone 8 base card, during power failure extension port 8 is connected to the analog trunk port 12.
- Maximum: 3.

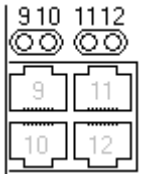

Daughter Card Ports (9-12)
The LEDs for ports 9 to 12 of the IP500 base card are used as follows:

- Green on: Card fitted.
- Green flashing: Trunk in use.
- LED 9 is used for daughter card status.
  - Red On = Error
  - Red Slow Flash = Initializing.
  - Red Flash every 5 seconds = Card okay.
  - Red Fast Flash = System shutdown.

Name	Description	SAP Code
IPO 500 Trnk Anlg 4 Uni	IP Office 500 Trunk Card Analog 4 Universal	700417405

7.4.2 PRI Trunk Cards

This card can be added to an IP500 base card to provide that card with support for PRI trunks. The card is available in single port or dual port variants, however on the single port variant is supported for IP Office Essential Edition - PARTNER® Version.

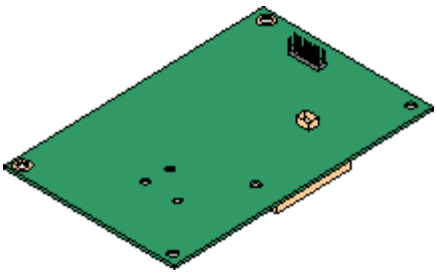

- Ports/Channels
  One port supporting the following PRI line types. On dual port cards both ports will be the same line type. The line type selection can be changed using IP Office Manager.
    - T1 robbed bit (24B channels per port).
    - T1 PRI (23B+D channels per port).
  - Physical trunk connection is via ports 9 of the host IP500 base card.
  - Port 11 can be used as test points for connection of test and monitoring equipment for the adjacent port.
- Maximum: 1.

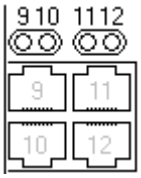

Daughter Card Ports (9-12)
The LEDs for ports 9 to 12 of the IP500 base card are used as follows:

- Off: No trunk present.
- Green on: Trunk present.
- Green flashing: Trunk in use.
- Red/Green Fast Flash (port 9) or Green Fast Flash (port 10): Alarm indication signal (AIS) from the trunk remote end.
- Red with Green Blink (port 9) or Green Blink (port 10): Port in loopback mode (set through IP Office System Monitor).
- LED 9 is used for daughter card status.
    - Red On = Error
    - Red Slow Flash = Initializing.
    - Red Flash every 5 seconds = Card okay.
    - Red Fast Flash = System shutdown.

Name	Description	SAP Code
IPO 500 TRNK PRI 1 UNI	IP Office 500 Trunk Card Primary Rate 1 Universal	700417439

7.5 Expansion Modules

An external expansion module can be used to add extra ports to the system. Only one external expansion unit is supported.

- The external expansion module is supplied with a blue 1 meter (3'3'') expansion interconnect cable. This cable must be used when connecting to expansion ports on the rear of a control unit.

Each module uses an external power supply unit supplied with the module. A locale specific power cord for the PSU must be ordered separately. Both types of module use an IEC60320 C13 type earthed power cord.

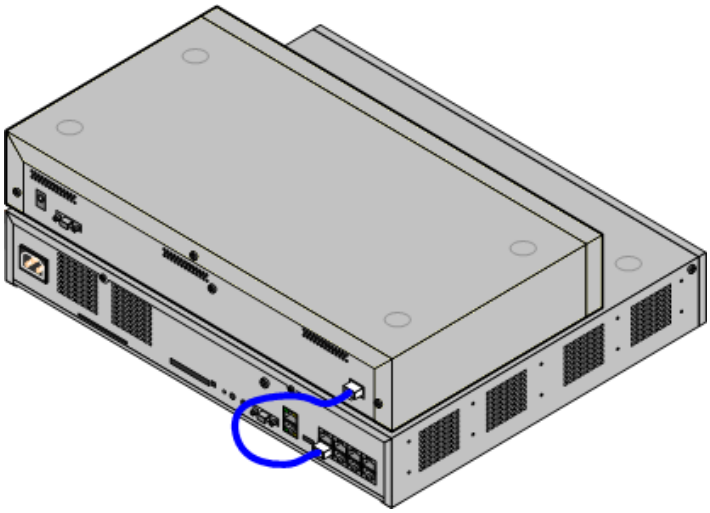

- IP500 Digital Station 16 Module
  Provides an additional 16 DS ports for 1400 Series phones.

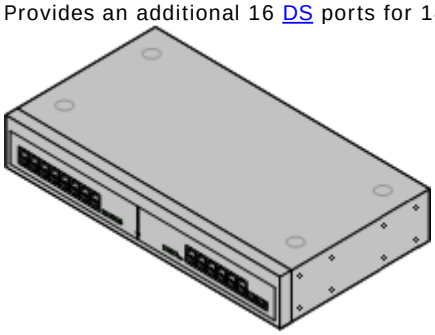

- IP500 Phone 16 Module
  Provides an additional 16 PHONE ports for analog phones.

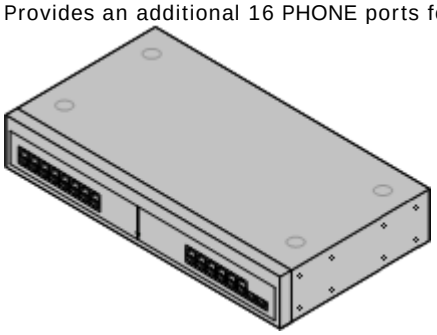

7.5.1 Digital Station

IPO 500 Digital Station modules can be used to add additional DS ports to an IP Office system. The module is available in 16 and 30 port variants, referred to as the IP500 Digital Station 16 and IP500 Digital Station 30 respectively.

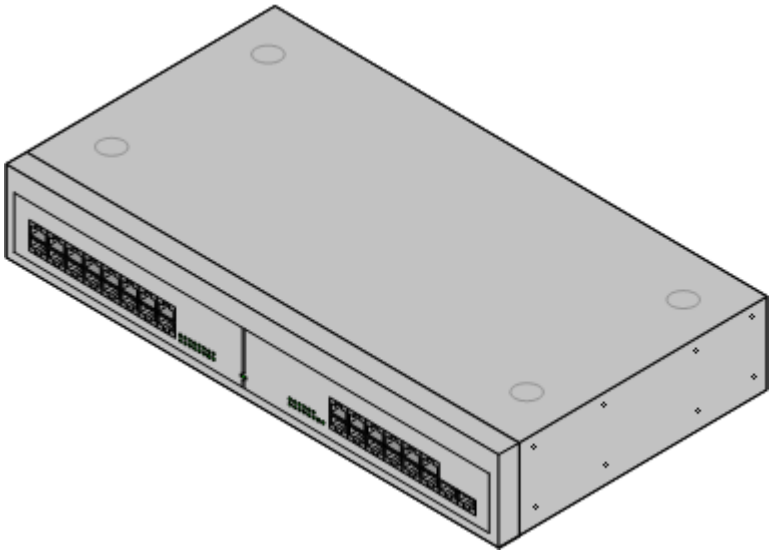

Feature	Details
Supported on	All IP Office control units except Small Office Edition.
Locales	Supported in all IP Office locales.
Software Level	IP Office core software level 2.1(31) minimum. Bin file = nadcpV2.bin.
Included	Power supply unit (see below) and Expansion Interconnect cable.
Power Supply	The module is supplied with a Earthed 3-Pin, 60W external power supply module. The PSU has an integral power cord for connection to the module's DC I/P socket. A locale specific IEC60320 C13 power cord for the external PSU is required but is not supplied with the module.
Mounting	The module is designed as a free-standing module that can be stacked on or under other IP Office modules. The module can be rack mounted in a 19" rack system using the optional IP500 Rack Mounting Kit.
Dimensions	Width: 445mm/17.5". Depth: 245mm/9.7". Height: 71mm/2.8".
Weight	Unboxed: 3.5Kg/7.8lbs. Boxed: 4.8Kg/10.8lbs.

IPO 500 Digital Station Connections

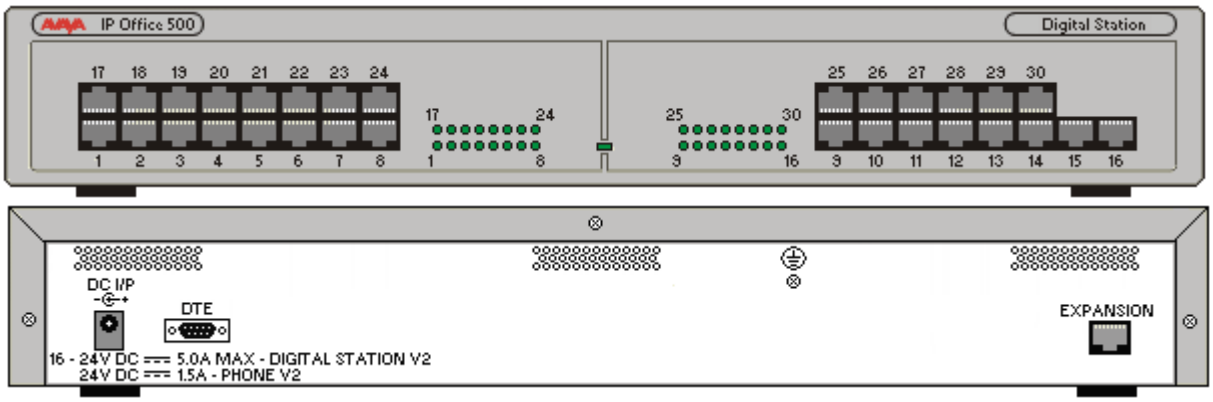

Ports	Description
DC I/P	DC power input port. Used for connection of the power lead from an Avaya earthed 60W external power supply unit supplied with the expansion module. A locale specific IEC60320 C13 power cord for the external PSU is required but is not supplied with the module.
DS	RJ45 socket. Digital Station port. Used for connection of IP Office supported DS phones. If connected to an out-of-building extension, the connection must be made via additional IROB barrier devices in addition to the buildings primary protection. The module must also be connected to a protective ground.
DTE	9-Way D-Type socket. For Avaya use only.
EXPANSION	RJ45 Socket. Used for direct connection to an Expansion port on an IP Office control unit using the Expansion Interconnect cable supplied with the module.
⏚	Protective Ground point. Use of a protective ground is required for all installations, see Grounding (Earthing). Where the module is connected to analog extensions in another building, an IP Office Phone Barrier Box V2 (101V) is required at both ends, see Lightning Protection/Out-of-Building Connections.

All expansion modules are supplied with a base software level and should be upgraded to match the core software of the control unit in the IP Office system.

Item	Variant	Country	SAP Code
IPO 500 Digital Station	16 Ports	All	700449499
	30 Ports		700426216
IEC60320 C13 Power Cord 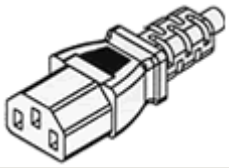	CEE7/7	Europe	700289762
	BS1363	United Kingdom	700289747
	NEMA5-15P	America	700289770
IP500 Rack Mounting Kit		All	700429202

Expansion modules include an external power supply unit (PSU) and an appropriate interconnect cable. They do not include a locale specific power cord for the external PSU or any phone extension cables.

7.5.2 Phone Module

IP500 Phone modules can be used to add additional PHONE ports to an IP Office system.

The module is available in 16 and 30 port variants, referred to as the IP500 Phone 16 and IP500 Phone 30 respectively.

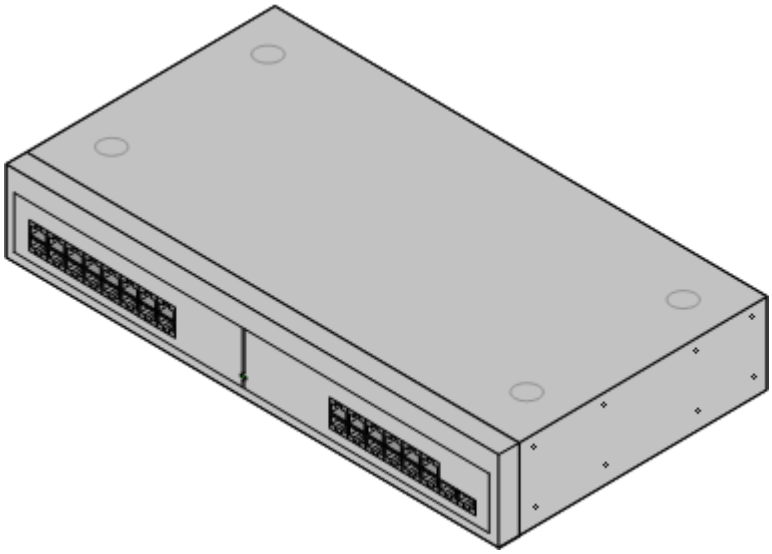

Feature	Details
Supported on	All IP Office control units except Small Office Edition.
Locales	Supported in all IP Office locales.
Software Level	IP Office core software level 2.1(36) minimum. Bin file = dvpots.bin.
Included	Power supply unit (see below) and Expansion Interconnect cable.
Power Supply	The module is supplied with a Earthed 3-Pin, 60W external power supply unit. The PSU has an integral power cord for connection to the module's DC I/P socket. A locale specific IEC60320 C13 power cord for the external PSU is required but is not supplied with the module.
Mounting	The module is designed as a free-standing module that can be stacked on or under other IP Office modules. The module can be rack mounted in a 19" rack system using the optional IP500 Rack Mounting Kit.
Dimensions	Width: 445mm/17.5". Depth: 245mm/9.7". Height: 71mm/2.8".
Weight	Unboxed: 3.1Kg/6.94lbs. Boxed: 4.4Kg/9.7lbs. (Based on Phone 30 V2)

IPO 500 Phone Connections

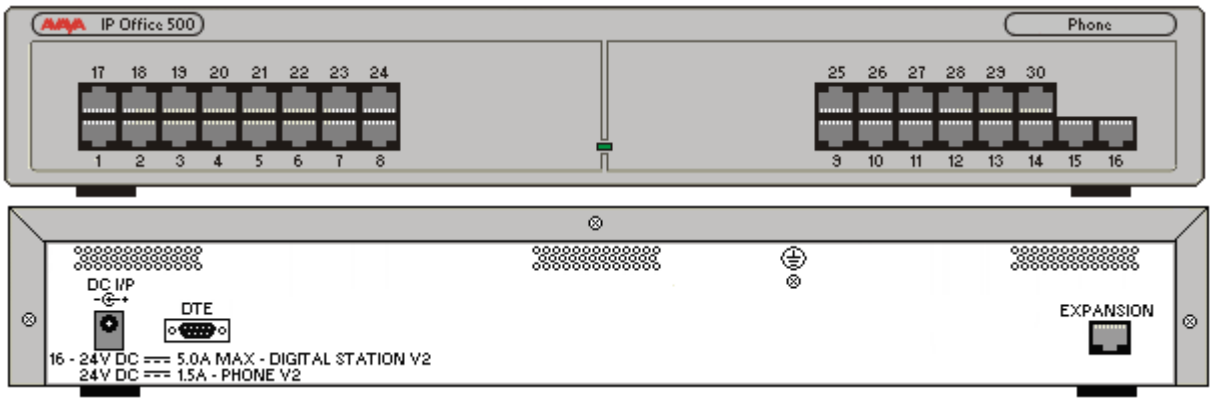

Ports	Description
DC I/P	DC power input port. Used for connection of the power lead from an Avaya earthed 60W external power supply unit supplied with the expansion module. A locale specific IEC60320 C13 power cord for the external PSU is required but is not supplied with the module.
DTE	9-Way D-Type socket. For Avaya use only.
EXPANSION	RJ45 Socket. Used for direct connection to an Expansion port on an IP Office control unit using the Expansion Interconnect cable supplied with the module.
PHONE	RJ45 socket. Used for connection of analog phones. Intended for two-wire analog phones. For connection to 4-wire analog phones connection should be via a master socket with ringing capacitors. If connected to an out-of-building extension, the connection must be made via additional IP Office Barrier Boxes in addition to the buildings primary protection. The module must also be connected to a protective ground.
⏚	Protective Ground point. Use of a protective ground is required for all installations, see Grounding (Earthing). Where the module is connected to analog extensions in another building, an IP Office Phone Barrier Box V2 (101V) is required at both ends, see Lightning Protection/Out-of-Building Connections.

All expansion modules are supplied with a base software level and should be upgraded to match the core software of the control unit in the IP Office system.

Item	Variant	Country	SAP Code
IPO 500 Phone	16 Ports	All	700449507
	30 Ports	All	700426224
IEC60320 C13 Power Cord 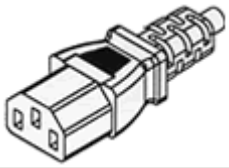	CEE7/7	Europe	700289762
	BS1363	United Kingdom	700289747
	NEMA5-15P	America	700289770
IP500 Rack Mounting Kit		All	700429202

Expansion modules include an external power supply unit (PSU) and an appropriate interconnect cable. They do not include a locale specific power cord for the external PSU or any phone extension cables.

7.6 Mounting Kits

The following mounting kits are available for use with IP Office systems.

7.6.1 IP500 Wall Mounting Kit

IP500 and IP500 V2 control units can be wall mounted if not using any external expansion modules. An IP500 wall mounting kit is required in addition to suitable wall fixings.

- IP500 Wall Mounting Kit *(SAP Code 700430150)*
  This kit must be used when wall mounting an IP500 or IP500 V2 control unit. Additional 4.5mm fixings suitable for the wall type are required. A clearance of 500mm around the control unit is required.

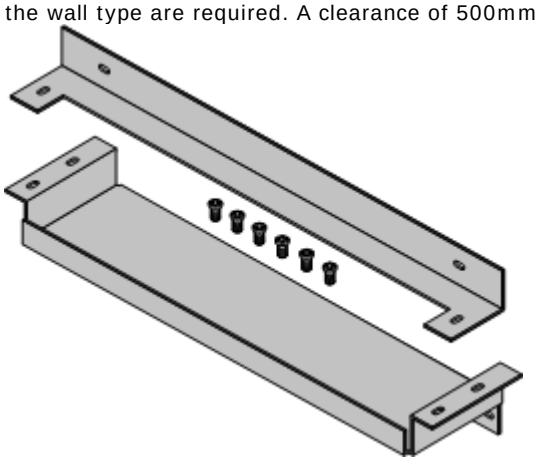

7.6.2 IP500 Rack Mounting Kit

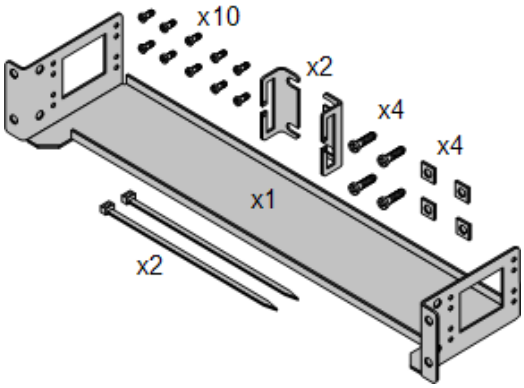

- IP500 Rack Mounting Kit *(SAP 700429202)*
  This kit contains all the components required for the rack mounting of a single IP500 V2 control unit, IP500 control unit or IP500 external expansion module. This includes screws for fixing of the brackets to the module, bolts for securing the module in the rack and cable tidy brackets.

7.6.3 Barrier Box Rack Mounting Kit

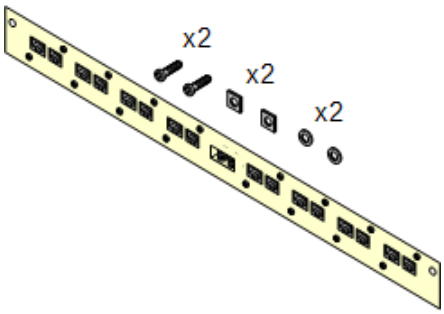

- Barrier Box Rack Mounting Kit *(SAP 700293905)*
  Barrier boxes must be used for out-of-building analog phone extensions. This bracket allows up to 8 IP Office barrier boxes to be rack mounted and simplifies the number of connections to the protective ground point in the rack. This kit must be used when more than 3 barrier boxes are in use and supports a maximum of 16 barrier boxes for a single external expansion module.

7.7 Telephones

The following phones are supported on IP Office Essential Edition - PARTNER® Version systems:

Telephones	Port Type	Intercom Button	Programmable Buttons		Total Buttons	Display	Handsfree	Aux Port	User/ System Prog
			...with lights	... without lights					
ACS "Refreshed" Series									
ETR6D	ETR	2	4	–	6	Yes	Yes	–	–
ETR18D	ETR	2	16	4	22	Yes	Yes	Yes	Yes
ETR34D	ETR	2	32	4	38	Yes	Yes	Yes	Yes
3910	ETR	2	–	6		Yes	Yes	–	–
3920	ETR	2	–	6		Yes	Yes	–	–
ACS "Euro" Series Phones									
ETR6	ETR	2	4	-	6	No	Yes	–	–
ETR18	ETR	2	16	4	22	No	Yes	Yes	–
ETR18D	ETR	2	16	4	22	Yes	Yes	Yes	Yes
ETR34D	ETR	2	32	4	38	Yes	Yes	–	Yes
1400 Series Phones									
1403/1403SW	DS	2	1	–	3	Yes	Yes	–	–
1408	DS	2	6	–	8	Yes	Yes	–	Yes
1416	DS	2	14	–	16	Yes	Yes	–	Yes

- Analog Phones: Any analog phones to be used with the system should be tested and validated by the installer before use.

Notes

1. ETR34 phones are limited to 2 per IP500 ETR6 base card and a maximum of 4 per system.
2. The ETR phones support attachment of an additional analog phone via the ETR phones Aux socket. Such analog phones operate with the same extension number as the ETR extension to which they are attached.
3. The 1416 can be used with DBM32 button modules to provide additional programmable buttons. Up to 3 DBM32 button modules can attached to a 1416.
4. The 3910 and 3920 are single handset DECT systems. The handset base station attaches to an analog port.

7.7.1 1403

1403	Feature	1408
	Connects via	DS port.
	Programmable Buttons	✓ 3 (bottom two are fixed as Intercom)
	Headset Socket	-
	Hands free Speaker / Microphone	✓ / ✓
	Message Waiting Lamp	✓
	Display	2 x 24 backlit.
	Supported Add-Ons	None.
	Upgradeable Firmware	✓

Fixed Function Keys				
✓ SPEAKER	HEADSET	✓ MUTE	✓ VOLUME UP	✗ CONTACTS
✓ MESSAGE	✓ HOLD	✓ TRANSFER	✓ VOLUME DOWN	✗ CALL LOG
✓ DROP	✓ REDIAL	✓ CONFERENCE	✗ MENU	

Name	Description
Programmable Buttons	The first two of them are fixed as Intercom. The remainder can be programmed by the system administrator as either line appearance buttons or feature buttons.
Avaya Menu	Press the A button to access the Avaya menu. Press the A button twice to exit the Avaya menu. The Avaya menu provides options that allow you to customize phone settings, select the display language, view network information, and log out.
Redial	Press Redial to dial the last number you dialed.
Hold	Press Hold to put the active call on hold.
Conference	Press Conference to add another party to an existing call.
Transfer	Press Transfer to transfer a call to another number.
Drop	Press Drop to drop the active call. While on a conference call, press Drop to drop the last person added to the conference call.
Volume	Press + or - on the volume button while active on the handset or speaker to adjust the volume. To adjust the volume of the ringer, press + or - on the volume button while the handset and speaker are inactive.
Mute	Press Mute to mute a call in progress. To take a call off mute, press Mute again.
Speaker	Press Speaker to use the speakerphone. To take a call off speakerphone, lift the handset.

7.7.2 1408

This type of phone can be used for user programming. When used as extension 10 or 11 it can also be used for system programming.

1408	Feature	1408
	Connects via	DS port.
	Programmable Buttons	✓ 8 (bottom two are fixed as Intercom)
	Headset Socket	✓
	Hands free Speaker / Microphone	✓ / ✓
	Message Waiting Lamp	✓
	Display	3 x 24 backlit.
	Supported Add-Ons	None.
	Upgradeable Firmware	✓

Fixed Function Keys				
✓ SPEAKER	✓ HEADSET	✓ MUTE	✓ VOLUME UP	✓ CONTACTS
✓ MESSAGE	✓ HOLD	✓ TRANSFER	✓ VOLUME DOWN	✓ CALL LOG
✓ DROP	✓ REDIAL	✓ CONFERENCE	✓ MENU	

Name	Description
Programmable Buttons	The first two of them are fixed as Intercom. The remainder can be programmed by the system administrator as either line appearance buttons or feature buttons.
Avaya Menu	Press the A button to access the Avaya menu. Press the A button twice to exit the Avaya menu. The Avaya menu provides options that allow you to customize phone settings, select the display language, view network information, and log out.
Redial	Press Redial to dial the last number you dialed.
Hold	Press Hold to put the active call on hold.
Conference	Press Conference to add another party to an existing call.
Transfer	Press Transfer to transfer a call to another number.
Drop	Press Drop to drop the active call. While on a conference call, press Drop to drop the last person added to the conference call.
Volume	Press + or - on the volume button while active on the handset or speaker to adjust the volume. To adjust the volume of the ringer, press + or - on the volume button while the handset and speaker are inactive.
Mute	Press Mute to mute a call in progress. To take a call off mute, press Mute again.
Speaker	Press Speaker to use the speakerphone. To take a call off speakerphone, lift the handset.
Call Log	Access the log of incoming, outgoing and missed calls.
Contacts	Access the system directory of extensions, hunt groups and the users personal speed dials.

7.7.3 1416

This type of phone can be used for user programming. When used as extension 10 or 11 it can also be used for system programming.

1416	Feature	1416
	Connects via	DS port.
	Programmable Buttons	✓ 16 (bottom two are fixed as Intercom)
	Headset Socket	✓
	Hands free Speaker / Microphone	✓ / ✓
	Message Waiting Lamp	✓
	Display	4 x 24 Backlit.
	Supported Add-Ons	DBM32 x 2.
	Upgradeable Firmware	✓

Fixed Function Keys				
✓ SPEAKER	✓ HEADSET	✓ MUTE	✓ VOLUME UP	✓ CONTACTS
✓ MESSAGE	✓ HOLD	✓ TRANSFER	✓ VOLUME DOWN	✓ CALL LOG
✓ DROP	✓ REDIAL	✓ CONFERENCE	✓ MENU	

Name	Description
Programmable Buttons	The first two of them are fixed as Intercom. The remainder can be programmed by the system administrator as either line appearance buttons or feature buttons.
Avaya Menu	Press the A button to access the Avaya menu. Press the A button twice to exit the Avaya menu. The Avaya menu provides options that allow you to customize phone settings, select the display language, view network information, and log out.
Redial	Press Redial to dial the last number you dialed.
Hold	Press Hold to put the active call on hold.
Conference	Press Conference to add another party to an existing call.
Transfer	Press Transfer to transfer a call to another number.
Drop	Press Drop to drop the active call. While on a conference call, press Drop to drop the last person added to the conference call.
Volume	Press + or - on the volume button while active on the handset or speaker to adjust the volume. To adjust the volume of the ringer, press + or - on the volume button while the handset and speaker are inactive.
Mute	Press Mute to mute a call in progress. To take a call off mute, press Mute again.
Speaker	Press Speaker to use the speakerphone. To take a call off speakerphone, lift the handset.
Call Log	Access the log of incoming, outgoing and missed calls.
Contacts	Access the system directory of extensions, hunt groups and the users personal speed dials.

7.7.4 ETR6/ETR6D

This phone is only supported by an ETR6 card. All 'Refresh' and 'Euro Style' variants of the phone are supported.

ETR6 (Non display variant)

ETR6D (Display variant)

Feature	ETR34	ETR34D
Programmable Buttons with Lights	4	4
Programmable Buttons without Lights	0	0
Intercom Buttons	2	2
Display	No	Yes
Speakerphone	Yes	Yes

7.7.5 ETR18/ETR18D

This phone is only supported by an ETR6 card. All 'Refresh' and 'Euro Style' variants of the phone are supported.

The ETR18D can be used for user programming. When used as extension 10 or 11 it can also be used for system programming. An additional analog device using the same extension number can be connected via the ETR phone's Aux socket.

ETR18 (Non display variant)

ETR18 D (Display variant)

Feature	ETR18	ETR18D
Programmable Buttons with Lights	16	16
Programmable Buttons without Lights	4	4
Intercom Buttons	2	2
Display	No	Yes
Speakerphone	Yes	Yes

7.7.6 ETR34/ETR34D

This phone is only supported by an ETR6 card. All 'Refresh' and 'Euro Style' variants of the phone are supported.

The system supports up to maximum 4 ETR34/ETR34D phones with a maximum of 2 on any ETR-6 base card. The ETR34D can be used for user programming. When used as extension 10 or 11 it can also be used for system programming. An additional analog device using the same extension number can be connected via the ETR phone's Aux socket.

ETR34D (Display variant)

Feature	ETR34	ETR34D
Programmable Buttons with Lights	32	32
Programmable Buttons without Lights	4	4
Intercom Buttons	2	2
Display	No	Yes
Speakerphone	Yes	Yes

7.7.7 3910

The Avaya 3920 is a single station DECT phone wireless telephone. The base station connects to an ETR port. Coverage area depends on building construction and environmental conditions. This phone is no longer available from Avaya and has been superseded by the 3920.

7.7.8 3920

The Avaya 3920 is a single station DECT phone wireless telephone. The base station connects to an ETR port. Coverage area depends on building construction and environmental conditions.

The bottom 8 buttons are used as 2 fixed intercom buttons and 6 line or programmable buttons.

Fixed Function Keys				
✓ SPEAKER	✗ HEADSET	✓ MUTE	✗ VOLUME UP	✗ CONTACTS
✗ MESSAGE	✓ HOLD	✓ TRANSFER	✗ VOLUME DOWN	✗ CALL LOG
✓ TALK	✓ REDIAL	✓ CONFERENCE	✗ MENU	

7.7.9 Phone Add-Ons

The 1416 phone supports button modules which provided the phone with additional programmable buttons.

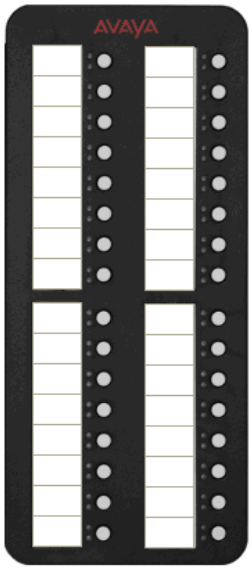

- Only two DBM32 units can be connected in a chain from a single 1416.
- Up to three 1416 telephones with BM32s are supported, ie. 6 BM32s.

Item	Part number
BM32 BUTTON MODULE	700415573
Accessories	
1600 SERIES BM32 CABLE - REPLACEMENT	700415581
1600 SERIES BM32 BOND BRIDGE - REPLACEMENT	700415599
1616/BM32 PLASTIC LABEL COVERS (20) – REPLACEMENT	700415672
1600 SERIES BM32 FLIP STAND - REPLACEMENT	700432800
Paper Labels	
1616/BM32 PAPER DESI LABELS - PACKAGE OF 50 LABELS (8.5" x 11")	700415656
1616/BM32 PAPER DESI LABELS - PACKAGE OF 50 LABELS (A4)	700434236

7.8 Licences

The following licenses are supported by IP Office Essential Edition - PARTNER® Version. They are entered into the system's configuration and must match the serial number of the system's Avaya SD card in order to be valid.

- Essential Edition Additional Voicemail Ports : *IPO LIC R6 ESSNTL EDDITION ADD 2 - 229423.*
  By default the System SD card provides 2 ports of embedded voicemail. This type of license can be used to add additional ports up to the maximum of 6.
- SIP Trunk Channels
  By default the system supports 3 SIP channels. These licenses can be added to enable additional channels up to the maximum of 20.
  - *IPO LIC SIP TRNK RFA 1 - 202967.*
  - *IPO LIC SIP TRNK RFA 5 - 202968.*
  - *IPO LIC SIP TRNK RFA 10 - 202969.*
  - *IPO LIC SIP TRNK RFA 20 - 202970.*
- Mobility Features
  By default only 3 users can be configured to use remote forwarding/mobile twinning. These licenses can be added to enable additional users.
  - *IPO LIC MOBILE WORKER RFA 1 - 195569.*
  - *IPO LIC MOBILE WORKER RFA 5 - 195570.*
  - *IPO LIC MOBILE WORKER RFA 20 - 195572.*

7.9 Physical Ports

The following port types are found on IP Office systems:

Port	Description
ANALOG	Used for the connection of external analog trunks.
AUDIO	Used for input of an external music on hold source.
DS	Connection of Avaya digital station phones supported by IP Office.
RS232/DTE	Used for control unit maintenance under Avaya guidance. On expansion modules not used.
EF	Emergency power failure ports found on the ETR6 base card.
ETR	Only supported on IP500 V2 control unit running in Partner Version mode.
EXPANSION	Used for interconnection of external expansions modules and control units.
EXT O/P	Used to control external relay systems. The port provides two switchable (on, off and pulse) controls.
⏚	Used for connection of functional or protective ground if required.
LAN	10/100Mbps Ethernet LAN ports.
PF	Analog power fails ports.
PHONE (POT)	Analog phone extension ports. On older units these ports are labeled as POT ports.
PRI	PRI trunk ports.
USB	Not used.

7.9.1 ANALOG Port

These ports are analog trunk ports. The ATM4 analog trunk cards only support loop-start trunks.

ANALOG	Pin	Description
RJ45 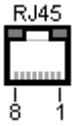	1	Not used.
	2	Not used.
	3	Not used.
	4	Ring.
	5	Tip.
	6	Not used.
	7	Not used.
	8	Not used.

- Off-Hook Current: 25mA.
- IMPORTANT
  In all IP Office installations, any module being used for analog trunk connections must be connected to a functional earth.
- WARNING
  Within areas of high lightning risk, any module using analog trunk connections must be connected to a protective ground and to surge protection equipment.

7.9.2 Audio Port

This port is found on the rear of the control unit. It is used for the input of an external music-on-hold sound source. Note that if the IP Office has loaded an internal music-on-hold sound file, any input from this socket is ignored.

The port is a 3.5mm stereo jack socket suitable for use with the most standard audio leads and connection to the 'headphone' output socket of most audio systems.

The use of a 'headphone' socket allows simple volume adjustment. Connection via a *'Line Out'* socket may require additional equipment in order to adjust the volume level.

Pin No.	Description
Common	Common
Left	Audio In - Left Channel.
Right	Audio In - Right - Channel.

- Input impedance: 10k /channel. Maximum a.c. signal – 200mV rms.

7.9.3 DC I/P Port

Found on all IP Office control units and expansion modules. Used for connection from the external power supply unit supplied with the control unit or module.

- No other type of power supply unit should be used with the module or module unless specifically indicated by Avaya.
- Power cords must not be attached to the building surface or run through walls, ceilings, floors and similar openings.

7.9.4 DS Ports

These ports are used for connection from an RJ45 structured cabling system to digital station phones supported by the IP Office Essential Edition - PARTNER® Version.

Though the RJ11 to RJ11 cables supplied with most DS phones can be plugged directly into RJ45 ports including those on IP Office Essential Edition - PARTNER® Version modules, this is not recommend as the connection lock is not positive and may become disconnected.

DS ports on Digital Station V2 expansion modules can be connected to out-of-building extensions. If this is the case, connection must be made via suitable protective devices at each end and via each building primary protection. In addition the Digital Station module must be connected to a protective ground.

DS ports on IP 500v2 control units must not be connected to out-of-building extensions.

Structured Cabling Line Cord
This is an RJ45 to RJ11 cable suitable for connection from a structured cabling system RJ45 port to a DS phone. It can also be used for two-wire analog phone extensions.

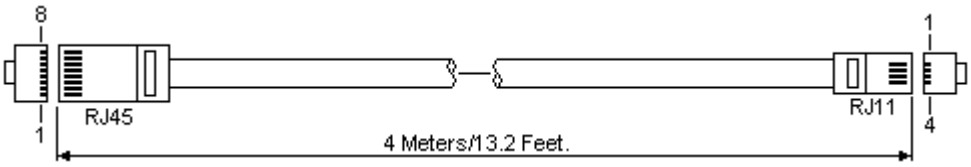

IP Office			Phone	
DS Port	Pin	Description	Pin	Port
RJ45	1	Not used.	–	RJ11
	2	Not used.	1	
	3	Not used.	2	
	4	Signal 1.	3	
	5	Signal 2.	4	
	6	Not used.	5	
	7	Not used.	6	
	8	Not used.	–	
Part number: 700047871				

7.9.5 EF Port

These ports are found on the ETR6 base card. They are analog trunk ports that are only useable when the card is fitted with an IP500 ATM4 trunk daughter card. When in power fail, the EF ports are connected to trunk port 12.

7.9.6 ETR Port

ETR (Enhanced Tip and Ring) ports are provided by the ETR-6 base card. They can be used for the connection of DTMF analog phone devices and Avaya ETR phones.

7.9.7 Expansion Port

This type of port is found on the rear of IP 500v2 control units and external expansion modules. It is used for connecting the external expansion modules to the parent control unit.

The connection between these ports should only be done using an Avaya Expansion Interconnect Cable. No other cable type should be used.

Expansion Interconnect Cable
The Expansion Interconnect cable is used to link expansion ports between the control unit and external expansion module.

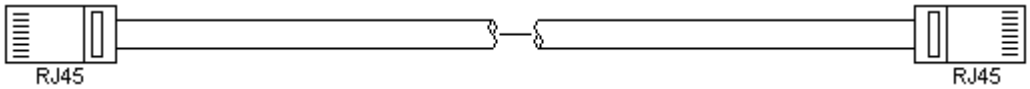

- Supply: One cable is normally supplied with each external expansion module.
- Part number: 1m (3'3") Blue cable - 700213457, 2m (6'6") Yellow cable - 700472871.

7.9.8 EXT O/P Port

The IP Office Essential Edition - PARTNER® Version control unit is equipped with a EXT O/P port. The port is marked as EXT O/P and is located on the back of the control unit adjacent to the power supply input socket and uses a standard 3.5mm stereo jack plug for connection.

The port can be used to control up to two external devices such as door entry relay switches. The usual application for these switches is to activate relays on door entry systems. However, as long as the criteria for maximum current, voltage and if necessary protection are met, the switches can be used for other applications.

The IP Office is able to open (high resistance), close (low resistance) or pulse (close for 5 seconds and then open) the two switches within the port.

Door relay switches can be controlled in IP Office Essential Edition - PARTNER® Version by Contact Closure 1: (Feature 41) and Contact Closure 2: (Feature 42) buttons that can be programmed onto phones using Manager or handset TUI entries.

- CAUTION: In installations where this port is connected to a device external to the building, connection must be via a towerMAX SCL/8 Surge Protector and a protective ground connection must be provided on the IP Office control unit. The towerMAX range of devices are supplied by ITWLinx (http://www.itwlinx.com).

EXT O/P	Pin	Description	TUI Feature
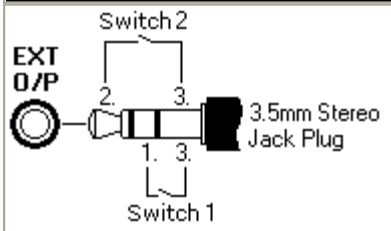	1	Switch 1.	*41
	2	Switch 2.	*42
	3	0 Volts (Ground/Chassis)	N/A

- Switching Capacity: 0.7A.
- Maximum Voltage: 55V d.c.
- On state resistance: 0.7 ohms.
- Short circuit current: 1A.
- Reverse circuit current capacity: 1.4A.
- Ensure that pins 1 and 2 are always at a positive voltage with respect to pin 3.

3.5mm stereo audio jack plugs are frequently sold as pre-wired sealed modules. It may be necessary to use a multi-meter to determine the wiring connections from an available plug. Typically 3 (common to both relays) is the cable screen.

7.9.9 LAN Port

The IP Office control unit has 2 RJ45 Ethernet ports, marked as LAN and WAN. These form a full-duplex managed layer-3 switch. Within the IP Office configuration, the physical LAN port is LAN1, the physical WAN port is designated LAN2 but should not be used.

The LAN port LEDs indicate as follows:

- Green: On = connected, Flashing = Activity.
- Yellow: On = 100Mbps, Off = 10Mbps.

LAN Cables

These are CAT5 UTP cables for connection of various IP devices within the IP Office Essential Edition - PARTNER® Version system.

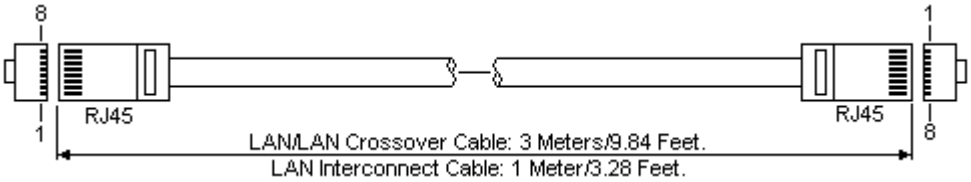

IP Office							
LAN	Pin	MDIX (Normal)	MDI (Crossover)	Wire	Standard/ Interconnect	Crossover	
	1	⬅Rx-A.	➡Tx-A.	White/Orange	1	3	
	2	⬅Rx-B.	➡Tx-B.	Orange/White	2	6	
	3	➡Tx-A.	⬅Rx-A.	White/Green	3	1	
	4	Not used.	Not used.	Blue/White	4	4	
	5	Not used.	Not used.	White/Blue	5	5	
	6	➡Tx-B.	⬅Rx-B.	Green/White	6	2	

	7	Not used.	Not used.	White/Brown	7	7	
	8	Not used.	Not used.	Brown/White	8	8	

- Part number:
  - LAN Cable - GREY: 700213481.
    Standard straight LAN cable.
  - LAN Crossover Cable - Black: 700213473.
    LAN crossover cable.

7.9.10 PF Port

These ports are analog extension ports that can be used in conjunction with analog loop-start trunks during power failure to the IP Office Essential Edition - PARTNER® Version system. There are a number of options to connect analog extension ports to analog trunks during power failure. In all cases these only work with loop-start analog trunks. Any phones connected to these ports should be clearly labeled as power fail extensions in accordance with the appropriate national and local regulatory requirements.

When an IP Office 500Analog Phone 8 base card is fitted with an IP Office 500Analog Trunk daughter card, during power failure extension port 8 is connected to analog trunk port 12. The same applies to the IP Office 500ATM Combination card and the IP Office 500 ETR-6 base card.

Any phones connected to these ports should be clearly labeled as power fail extensions in accordance with the appropriate national and local regulatory requirements.

PF	Pin	Description
RJ45 8 1	1	Not used.
	2	Pin 2 is internally connected to pin 5 via a ringer capacitor.
	3	Not used.
	4	Ring.
	5	Tip.
	6	Pin 6 is internally connected to pin 5 via a ringer capacitor.
	7	Not used.
	8	Not used.

- Minimum Wire Size: AWG 26.
- Maximum Cable Length:
  - AWG26: 500m / 1640'.
  - AWG24, AWG22: 1000m / 3280'.

7.9.11 Phone (POT) Port

These ports are analog extension ports. On expansion modules they can be connected to out-of-building extensions. If this is the case, connection must be made via suitable protective devices (IP Office Barrier Box) at each end and via each building primary protection. In addition the Phone module must be connected to a protective ground.

⚠ PHONE ports on IP Office Essential Edition - PARTNER® Version control units must not be connected to out-of-building extensions.

PHONE	Pin	Description
RJ45 8 1	1	Not used.
	2	Not used.
	3	Not used.
	4	Ring.
	5	Tip.
	6	Not used.
	7	Not used.
	8	Not used.

- REN: 2
- Off-Hook Current: 25mA.
- Ring Voltage: 40V rms.
- Minimum Wire Size: AWG 26.
- Maximum Cable Length:

- AWG26: 0.5km / 1640 feet.
- AWG24, AWG22: 1km / 3280 feet.

Except on some older equipment, these ports do not include a ringing capacitor. Therefore for connection to 4-wire analog phones where this is a requirement, connection should be via a Master socket containing ringing capacitors.

Message waiting is hard wired, 51 volt stepped

Structured Cabling Line Cord
This is an RJ45 to RJ11 cable suitable for connection from a structured cabling system RJ45 port to a DS phone. It can also be used for two-wire analog phone extensions.

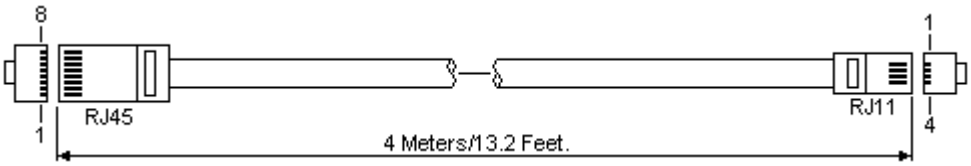

IP Office			Phone	
DS Port	Pin	Description	Pin	Port
RJ45 (8 1)	1	Not used.	–	RJ11 (6 1)
	2	Not used.	1	
	3	Not used.	2	
	4	Signal 1.	3	
	5	Signal 2.	4	
	6	Not used.	5	
	7	Not used.	6	
	8	Not used.	–	

- Part Number: 700047871.

7.9.12 PRI Port

These ports are used for connection to PRI trunk services.

PRI Trunk Cable
This cable is used to connect from trunk ports to the line providers network termination equipment. If that equipment does not use RJ45 sockets, the cable may need to be stripped and rewired or an alternative cable used. The appropriate signal pin-outs and wire colors are detailed below.

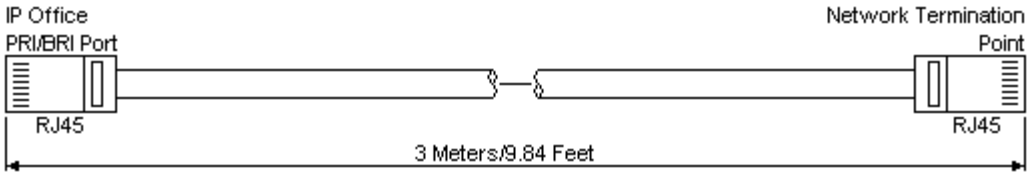

IP Office			Wire	Network Termination	
	RJ45	PRI		PIN	RJ45
RJ45 (8 1)	1	⬅Rx-A	White/Orange	1	RJ45 (8 1)
	2	⬅Rx-B	Orange/White	2	
	3	–	White/Green	3	
	4	➡Tx-A	Blue/White	4	
	5	➡Tx-B	White/Blue	5	
	6	–	Green/White	6	
	7	–	White/Brown	7	
	8	–	Brown/White	8	

- Supply: PRI trunks cards are not supplied with these cables.
- Cable Color: Red.

- Part number: 700213440.
- Standard Length: 3m/9'10".

7.9.13 RS232 DTE Port

This port is found on the rear of the control unit and external expansion modules. The DTE ports on external expansion modules are not used.

The RS232 DTE port on the control unit can be used for system maintenance and connection of serial terminal adaptors.

An asynchronous terminal program such as HyperTerminal is also required to manage the serial data exchange. Configure this for operation via a PC serial port, as follows:

Bits per second	38,400	Parity	None	Flow Control	None
Data bits	8	Stop Bits	1	PC Settings | Emulation	TTY

DTE Cables
These cables are used for system maintenance and diagnostics under Avaya guidance. They can also be used for connection of RS232 serial terminal adaptor equipment to the IP Office control unit. The cable required depends on the IP Office control unit. This cable is a "Straight through DB9 female to DB9 male serial cable".

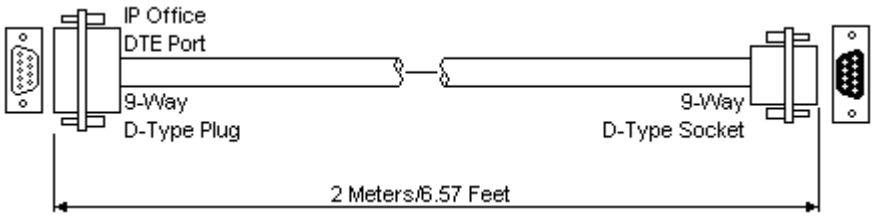

IP Office 9-Way RS232 DTE Port	Signal	PC/Terminal Adaptor
3	⬅Receive data	3
2	➡Transmit Data	2
7	⬅RTS (Request To Send)	7
8	➡CTS (Clear To Send)	8
6	➡DSR (Data Set Ready)	6
5	●Ground	5
1	➡DCD (Data Carrier Detect)	1
4	⬅DTR (Data Terminal Ready)	4
9	➡RI (Ring Indicator)	9

Chapter 8.
Safety Statements

8. Safety Statements

Avaya IP500 Office equipment is intended to be installed by 'Service Personnel' and it is the responsibility of the Service Personnel to ensure that all subsidiary interconnected equipment is wired correctly and also meet the safety requirements of IEC60950 or UL60950 where applicable.

- CE
  The CE mark affixed to this equipment means that the module complies with the 1999/5/EC (R&TTE), 89/336/EEC (EMC) and 72/23EEC (LVD) Directives.
- The Declarations of Conformity (DoC) for IP500 products are available on the IP Office Application DVD.
- This warning symbol is found on the base of IP500 modules.
- Refer to Trunk Interface Modules for information concerning which Trunk Interface module variants are fitted in which country.

8.1 Lightning Protection/Hazard Symbols

Lightning protectors

The buildings lightning protectors must be verified as follow:

1. Check the lightning protectors, at the trunk cable entry point to the building housing the Avaya IP Office, paying special attention to the lightning protection grounding. Report any problems, in writing, to the telephone company.
2. Equipment that is designed to be connected using internal wiring is typically not lightning protected. Hence, Avaya IP Office extension cabling must not leave the building. For installations where telephones and/or other standard (tip/ring) devices are installed in another building then lightning protection is required (see Out of Building Telephone Installations).

Hazard Symbol

- The shock hazard symbol is intended to alert personnel to electrical hazard or equipment damage. The following precautions must also be observed when installing telephone equipment:

2. Never install telephone wiring during a lightning storm.
3. Never install telephone jacks in wet locations unless the jack is specifically designed for wet locations.
4. Never touch uninsulated telephone wires or terminals unless the telephone line has been disconnected at the network interface.
5. Always use caution when working with telephone lines.

8.2 Trunk Interface Modules

To ensure the validation of the approvals, only the following types of trunk interface cards must be fitted in the following IP Office control units.

USA/Canada				
Product	PRI E1	PRI T1	ATM4	WAN
	Single	Single		
IP Office Essential Edition - PARTNER® Version	✗	✓	✓	✗

8.3 Further Information and Product Updates

Further information, including Product and Reference Manual updates, can be obtained from Avaya's Dealers and Distributors, or from Avaya's web site: http://www.avaya.com.

This guide is also available from the Avaya's support web site: http://support.avaya.com.

Support Telephone Numbers
For initial help and support, contact your distributor/supplier. The following contact points are for Avaya authorized partners.

- In the USA only
  Avaya provides a toll-tree Customer Helpline 24 hours a day:
  - Name: Avaya Technical Support Organization (TSO)
  - Customer Helpline: 1 800 628-2888
  - Address: 8744 Lucent Blvd., Highlands Ranch, Colorado, 80129 USA
  - URL: http://support.avaya.com
    If you need assistance when installing, programming, or using your system, call the Helpline or your Avaya representative. Consultation charges may apply.

- Outside the USA
  If you need assistance when installing, programming, or using your system, contact your Avaya representative.
  - URL: http://support.avaya.com

8.4 Compliance with FCC Rules

Transmit and Receive Gain Settings for PRI/T1 and Analog Ports

The Gain settings are password controlled for use by qualified installation personnel only and must not be made available to the end user. The default gain settings of 0dB ensures compliance with FCC part 68 section 68.308(b)(5) and TIA/EIA-IS-968 Section 4.5.2.5. "Through transmission amplification from ports for the connection of separately registered equipment or from other network connection ports". Gain setting adjustment by unqualified personnel may result in violation of the FCC rules. Qualified personnel may adjust gain settings above these levels only where:

1. Measurement is made to ensure that the power levels sent to line at each network interface connected does not exceed the maximum levels specified in FCC part 68 section 68.308(b) and TIA/EIA-IS-968 Section 4.5 for that specific interface type.
2. Where gain adjustment away from the default values are made, precautions should be taken to ensure that the connection of terminal equipment is controlled by qualified installation personnel.

8.5 Port Safety Classification

The Avaya IP Office IP Office Essential Edition - PARTNER® Version system has the following ports which are classified as follows:

Port Name	Port Description	Port Classification
PRI port	PRI ISDN connection (NET)	TNV (Operating within the limits of SELV)
Analog ports	Two wire analog trunk	TNV3
Power fail ports	Two wire analog trunk	TNV3
DTE port	Async Data connection.	SELV
Analog Telephone Ports	Telephone Extension ports	TNV2
Digital Telephone Ports	Telephone Extension ports	SELV
WAN port (not used)	WAN connection (NET).	SELV
LAN ports	10/100 BaseT attachment to LAN.	SELV
Expansion ports	Expansion Module connector.	SELV
Audio port	Connector for Music on Hold.	SELV
External Control port	Connector for Controlling Ancillary circuits.	SELV
DC Input port	Connector for DC input power.	SELV

Interconnection circuits shall be selected to provide continued conformance with the requirements of EN 609050:1992/ A3:1995 clause 2.3 for SELV circuits and with the requirements of clause 6 for TNV circuits, after connections between equipment.

8.6 EMC Directive

889/336/ EEC (EMC Directive) CISPR 22:1993 including A1 + A2, AS/NZ 3548:1995 (ROW)

- WARNING
  This is a class A product. In a domestic environment this product may cause radio interference in which case the user may be required to take adequate measures.

Federal Communications Commission (FCC)

This equipment has been tested and found to comply with the limits for a Class A digital device, pursuant to Part 15 of the FCC Rules. These limits are designed to provide reasonable protection against harmful interference when the equipment is operated in a commercial environment. This equipment generates, uses, and can radiate radio frequency energy and, if not installed and used in accordance with the instruction manual, may cause harmful interference to radio communications. Operation of this equipment in a residential area is likely to cause harmful interference, in which case the user will be required to correct the interference at his or her own expense.

Canadian Department of Communications (DOC)

''NOTICE: This equipment meets the applicable Industry Canada Terminal Equipment Technical Specifications. This is confirmed by the registration number. The abbreviation, IC, before the registration number signifies that registration was performed based on a Declaration of Conformity indicating that Industry Canada technical specifications were met. It does not imply that Industry Canada approved the equipment."

8.7 Regulatory Instructions for Use

8.7.1 Canada

This equipment meets the applicable Industry Canada Terminal Equipment Technical Specifications. This is confirmed by the registration number. The abbreviation, IC, before the registration number signifies that registration was performed based on a Declaration of Conformity indicating that Industry Canada technical specifications were met.

It does not imply that Industry Canada approved the equipment.

''NOTICE: The Ringer Equivalence Number (REN) for this terminal equipment is 1. The REN assigned to each terminal equipment provides an indication of the maximum number of terminals allowed to be connected to a telephone interface. The termination on an interface may consist of any combination of devices subject only to the requirement that the sum of the Ringer Equivalence Numbers of all the devices does not exceed five.''

8.7.2 FCC Notification

This equipment is registered with the ACTA (Administrative Council for Terminal Attachments) in accordance with FCC Part 68 of its rules. In compliance with those rules, you are advised of the following:

- Means of Connection
  Connection of this equipment to the telephone network shall be through a standard network interface jack. Connection to 1.544-Mbps digital facilities must be through a USOC RJ48C. Connection to the Analog Trunk facilities must be through a USOC RJ45S.
- Notification to the Telephone Companies
  Before connecting this equipment, you or your equipment supplier must notify your local telephone company's business office of the telephone number or numbers you will be using with this equipment.
- The facility interface codes (FIC) for 1.544-Mbps digital connection are 04DU9.BN, 04DU9.DN, 04DU9.IKN, 04DU9.ISN.
- The facility interface code (FIC) for analog trunk connection are OL13A, OL13B, OL13C, 02AC2, 02LA2, 02LB2, 02LC2, 02LR2, 02LS2.
- The facility interface code (FIC) for analog trunk connection are OL13A, OL13B, OL13C, 02AC2, 02GS2, 02LA2, 02LB2, 02LC2, 02LR2, 02LF2.
- The Service Order Code (SOC) for 1.544-Mbps digital connection is 6.0Y.
- The Service Order Code (SOC) for analog trunk connection is 9.0Y.
- Disconnection
  You must also notify your local telephone company if and when this equipment is permanently disconnected from the line or lines.
- Hearing Aid Compatibility
  The custom telephone sets for this system are compatible with inductively coupled hearing aids as prescribed by the FCC.

Ringer Equivalence Number (REN). The REN is used to determine the number of devices that may be connected to the telephone line. Excessive RENs on the line may result in the devices not ringing in response to an incoming call. In most, but not all, areas, the sum of the RENs should not exceed five. To be certain of the number of devices that may be connected to the line, as determined by the total RENs, contact the local telephone company to determine the maximum REN for the calling area.

Index

A

Analog
- Phone Barrier Boxes 72

Analog phone card 101
Avaya University 40

B

Backup 10
- SD Card 84

Barrier Boxes 23, 24
- Analog Phone 72
- Rack Mounting 73

Base card 99
- analog phone 13, 99
- ATM combination 13, 99
- digital station 13, 99
- ETR 13, 99

BM32 extension 17, 115, 118, 124
Bulletin technical 40, 41

C

Cable 8
- 9-way DTE 18
- Access Requirements 27
- Clearance Requirements 27
- LAN 18
- maximum distances 18
- RJ45 22
- standard IP Office 18

Cabling 21
- Lightening Protection 70

Capacity 96
Card
- analog phone 99, 101
- analog trunk 15, 106
- base 8, 13, 99
- combination 8, 13, 99, 105
- daughter 8, 15, 102, 106
- digital station 13, 99, 102
- DS 99
- ETR6 13, 99, 103
- PRI 15, 106
- SD 8
- trunk 8, 15, 106

Card SD
- content 98
- optional 12, 98
- removal 12

Conference parties 96
Configuration
- Create New 44

Connection
- grounding 54
- out of building 21

Connections
- Out of Building 70

Connector
- phone 18
- RJ11 18

Control unit 96
- grounding 54

Copy
- SD Card 86

Create Configuration 44

D

Daughter cards
- analog trunk 15, 106, 107
- PRI trunk 108
- PRI-U trunk 15, 106
- trunk 15, 106

DCI I/P Port 127
DECT 41
Default password 62
Digital station card 102
Documentation 41
DS
- IROB 71
- Phone 71

E

Earthing 24, 50
EMC Cautions
- Canadian Department of Communications 138
- EMC Caution for China 138
- Federal Communications Commission 138

Envirmental Requirements 26
Environmental requirements 50
Equipment
- protective 54

Expansion Module 8, 109
- connections 110
- digital station 16, 109, 110
- external 16, 109
- phone 16, 109, 112

EXT O/P Port 74
External module 16, 109

F

FCC Rules 137
Feature keys 12
Features, PARTNER 10
Fixed buttons 120

G

Ground symbols 54
Grounding control units 54

H

Hazard Symbols 136

I

Installation 40
- rack mounting 50
- wall mounting 48

Installer 40
IP Office
- base cards 8
- combination cards 8
- control unit 8
- installation 40
- system 8

IP Office Operation in
- Canada 139
- USA 139

IP500
- Reset Button 75

IP500 Installation
- Admin Applications 33
- Card 45
- Check Card LED 56
- Connect Manager 35
- Start Manager 36
- Tools 40

IP500 Installation
Unpacking 42
K
Knowledge base 41
L
LAN 129
Licenses 12, 61
Lightening protection 21, 70, 136
Line appearance 116
M
Manager
Upgrade Software 66
Memory card
Removal 78
Message waiting indicator 116
Module
trunk interface 137
Mounting
clearances 48, 50
rack 50
wall 48, 50
N
New Configuration 44
O
Out of Building
Connections 70
Out of building connection 21
P
PARTNER features 10
Parts required 40
Password
default 62
system 62
Phone
(POT) Port 130
1403 116
1408 117
1416 118
3920 123
add ons 124
analog 23
analog barrier box 23
connectors 18
DECT 123
DS 22
ETR18D 120
ETR34D 122
ETR6D 119
IROB 22
supported 17, 115
wireless 123
Phone (POT) Port 130
Port
analog 126
audio 126
BRI 126
Cable requirement 132
DC I/P 126
DCI I/P 127
digital 99
Door 74
DS 110, 126
DTE Settings 132
expansion 126
EXT O/P 74, 126
LAN 126
PF 126
Phone (POT) 126, 130
PRI 126
RJ45 99
RS232/DTE 126, 132
Safety Classification 138
USB 126
WAN 126
Power
cord 8
supplies 8
Preassigned features 10
PRI channels 106
Protective equipment 54
R
Rack mounting 50
Reliable earthing 50
Remote administration 62
Remote password 62
Remove
SD Card 78
Required tools 40
Requirements
Cable Access 27
Cable Clearance 27
Enviromental 26
Space 27
Wall Mounting 26
Restore
SD Card 85
S
SD card 12
Backup 84
Copy 86
format 98
removal 78, 98
Restore 85
Slot availability 10
Slot numbering 99
Space Requirements 27
Support 41
Supported phones 17, 115
Surge protector 8
System
capacity 11
constraints 11
T
Technical bulletin 40, 41
Tools required 40
towerMAX device 21
Trunk
cards 106
interface modules 137
U
University, Avaya 40
V
Voicemail 96
W
Wall mounting 48, 50
Wall Mounting Requirements 26

Performance figures and data quoted in this document are typical, and must be specifically confirmed in writing by Avaya before they become applicable to any particular order or contract. The company reserves the right to make alterations or amendments to the detailed specifications at its discretion. The publication of information in this document does not imply freedom from patent or other protective rights of Avaya or others.

All trademarks identified by the ® or ™ are registered trademarks or trademarks, respectively, of Avaya Inc. All other trademarks are the property of their respective owners.

This document contains proprietary information of Avaya and is not to be disclosed or used except in accordance with applicable agreements.

© 2010 Avaya Inc. All rights reserved.