Nortel CallPilot

1005r Server Hardware Installation

NN44200-308

Document status: Standard
Document version: 01.06
Document date: 15 May 2008

Copyright © 2006-2008, Nortel Networks
All Rights Reserved.

Sourced in Canada

The information in this document is subject to change without notice. The statements, configurations, technical data, and recommendations in this document are believed to be accurate and reliable, but are presented without express or implied warranty. Users must take full responsibility for their applications of any products specified in this document. The information in this document is proprietary to Nortel Networks.

The process of transmitting data and call messaging between the CallPilot server and the switch or system is proprietary to Nortel Networks. Any other use of the data and the transmission process is a violation of the user license unless specifically authorized in writing by Nortel Networks prior to such use. Violations of the license by alternative usage of any portion of this process or the related hardware constitutes grounds for an immediate termination of the license and Nortel Networks reserves the right to seek all allowable remedies for such breach.

Trademarks

*Nortel, the Nortel logo, the Globemark, and Unified Networks, BNR, CallPilot, DMS, DMS-100, DMS-250, DMS-MTX, DMS-SCP, DPN, Dualmode, Helmsman, IVR, MAP, Meridian, Meridian 1, Meridian Link, Meridian Mail, Norstar, SL-1, SL-100, Succession, Supernode, Symposium, Telesis, and Unity are trademarks of Nortel Networks.

3COM is a trademark of 3Com Corporation.

ADOBE is a trademark of Adobe Systems Incorporated.

ATLAS is a trademark of Quantum Corporation.

BLACKBERRY is a trademark of Research in Motion Limited.

CRYSTAL REPORTS is a trademark of Seagate Software Inc.

EUDORA is a trademark of Qualcomm.

eTrust and InoculateIT are trademarks of Computer Associates Think Inc.

DIRECTX, EXCHANGE.NET, FRONTPAGE, INTERNET EXPLORER, LINKEXCHANGE, MICROSOFT, MICROSOFT EXCHANGE SERVER, MS-DOS, NETMEETING, OUTLOOK, POWERPOINT, VISUAL STUDIO, WINDOWS, WINDOWS MEDIA, and WINDOWS NT are trademarks of Microsoft Corporation.

GROUPWISE and NOVELL are trademarks of Novell Inc.

LOGITECH is a trademark of Logitech, Inc.

MCAFEE and NETSHIELD are trademarks of McAfee Associates, Inc.

MYLEX is a trademark of Mylex Corporation.

NETSCAPE COMMUNICATOR is a trademark of Netscape Communications Corporation.

NOTES is a trademark of Lotus Development Corporation.

NORTON ANTIVIRUS and PCANYWHERE are trademarks of Symantec Corporation.

QUICKTIME is a trademark of Apple Computer, In.

RADISYS is a trademark of Radisys Corporation.

SLR4, SLR5, and TANDBERG are trademarks of Tandberg Data ASA.

SYBASE is a trademark of Sybase, Inc.

TEAC is a trademark of TEAC Corporation

US ROBOTICS, the US ROBOTICS logo, and SPORTSTER are trademarks of US Robotics.

WINZIP is a trademark of Nico Mark Computing, Inc.

XEON is a trademark of Intel, Inc.

All other trademarks and registered trademarks are the property of their respective owners.

Information for Japan

Japan Denan statement

The following applies to server models 600r, 1005r, 703t, and 1002rp:

⚠ Warning

Please be aware of the following while installing the equipment:

- Please use the connecting cables, power cord, and AC adaptors shipped with the equipment or specified by Nortel to be used with the equipment. If you use any other equipment, it may cause failures, malfunctioning or fire.
- Power cords shipped with this equipment must not be used with any other equipment. If the above guidelines are not followed, it may lead to death or severe injury.

⚠ 警告

本製品を安全にご使用頂くため、以下のことにご注意ください。

- 接続ケーブル、電源コード、ACアダプタなどの部品は、必ず製品に同梱されております添付品または指定品をご使用ください。添付品・指定品以外の部品をご使用になると故障や動作不良、火災の原因となることがあります。
- 同梱されております付属の電源コードを他の機器には使用しないでください。

上記注意事項を守らないと、死亡や大怪我など人身事故の原因となることがあります。

Japan VCCI statement

The following applies to server models 600r, 1005r, 703t, 201i, and 1002rp:

この装置は、情報処理装置等電波障害自主規制協議会 (VCCI) の規定に基づくクラス A 装置です。この装 置を家庭環境で使用すると電波妨害を引き起こすことがあります。この場合には使用者が適切な対策を取るように要求されることがあります。

This is a Class A product based on the standard of the Voluntary Control Council for Interference by Information Technology Equipment (VCCI). If this equipment is used in a domestic environment, radio disturbance may occur, in which case, the user may be required to take corrective action.

Publication History

May 2008
CallPilot 5.0, Standard 01.06 of *CallPilot Installation and Configuration, 1005r Server Hardware Installation* is issued for general release.

May 2007
CallPilot 5.0, Standard 01.05 of *CallPilot Installation and Configuration, 1005r Server Hardware Installation* is issued for general release.

April 2007
CallPilot 5.0, Standard 01.04 of *CallPilot Installation and Configuration, 1005r Server Hardware Installation* is issued for general release.

April 2007
CallPilot 5.0, Standard 01.03 of *CallPilot Installation and Configuration, 1005r Server Hardware Installation* is issued for general release.

April 2007
CallPilot 5.0, Standard 01.02 of *CallPilot Installation and Configuration, 1005r Server Hardware Installation* is issued for general release.

February 2007
CallPilot 5.0, Standard 01.01 of *CallPilot Installation and Configuration, 1005r Server Hardware Installation* is issued for general release.

Copyright © 2006-2008, Nortel Networks

Copyright © 2006-2008, Nortel Networks

Contents

Chapter 1 How to get help 9

Chapter 2 1005r server description 11
1005r Server features 11
Valid PCI card configurations 16
Network connectivity 18
Supported peripheral devices 21

Chapter 3 Preparing for installation 23
Installation overview 23
Unpacking the 1005r server 25
Removing the front bezel 27

Chapter 4 Installing the server and peripheral devices 29
Installing the server 29
Inspecting the modem 31
Connecting peripherals to the server 31
Connecting the server to the ELAN subnet 35
Connecting the server to the Nortel server subnet (optional) 36
Installing the Nortel software feature dongle 37

Chapter 5 Connecting the server to power 41
Safety precautions 41
Locating the power supply modules 41
Connecting the server to power 42

Appendix A EMC emission level protection for the 1005r Server 47

Index 49

Copyright © 2006-2008, Nortel Networks

Copyright © 2006-2008, Nortel Networks

Chapter 1
How to get help

This section explains how to get help for Nortel products and services.

Getting Help from the Nortel Web site

The best way to get technical support for Nortel products is from the Nortel Technical Support Web site:

www.nortel.com/support

This site provides quick access to software, documentation, bulletins, and tools to address issues with Nortel products. More specifically,

- download software, documentation, and product bulletins
- search the Technical Support Web site and the Nortel Knowledge Base for answers to technical issues
- sign up for automatic notification of new software and documentation for Nortel equipment
- open and manage technical support cases

Getting Help over the phone from a Nortel Solutions Center

If you do not find the information you require on the Nortel Technical Support Web site, and have a Nortel support contract, you can also get help over the phone from a Nortel Solutions Center.

In North America, call 1-800-4NORTEL (1-800-466-7835).

Outside North America, go to the following Web site to obtain the phone number for your region:

www.nortel.com/callus

Getting Help from a specialist by using an Express Routing Code

To access some Nortel Technical Solutions Centers, you can use an Express Routing Code (ERC) to quickly route your call to a specialist in your Nortel product or service. To locate the ERC for your product or service, go to:

Copyright © 2006-2008, Nortel Networks

www.nortel.com/erc

Getting Help through a Nortel distributor or reseller

If you purchased a service contract for your Nortel product from a distributor or authorized reseller, contact the technical support staff for that distributor or reseller.

Copyright © 2006-2008, Nortel Networks

Chapter 2
1005r server description

In this chapter

"1005r Server features" (page 11)

"Valid PCI card configurations" (page 16)

"Network connectivity" (page 18)

"Supported peripheral devices" (page 21)

"DCAM-7258188" (page 22)

1005r Server features

Introduction

The 1005r CallPilot server is a long life industrial server in a standard rack-mount 2U form factor. It utilizes dual Xeon technology and proven, reliable SCSI hard-drive technology.

This section provides a general overview of the 1005r server features.

RoHS compliance

The 1005r server meets the requirements of the Restriction of Hazardous Substances Directive 2002/95/EC, applicable in countries affected by the EUED (European Union Environmental Directives). RoHS requirements impose restrictions on the type and quantity of materials used in the manufacturing and construction of Electronic and Electrical Equipment (EEE).

To comply with the RoHS directive, some of the part numbers now contain an E5 or E6 suffix. For example, part number NTRH2014 is now NTRH2014E6. The part numbers in this guide do not contain the suffix.

Copyright © 2006-2008, Nortel Networks

Server dimensions and weight

Height	87.6 mm (3.45 in.)
Width	435.3 mm (17.4 in.)
Depth (distance from front to back)	508 mm (20 in.)
Weight of fully loaded system	20 kg (44 lb)

Environmental specifications

Environmental condition	Specification
Operating temperature	5°C to 35°C (41°F to 95°F) Maximum rate of change must not exceed 10°C (50°F) per hour.
Non operating (storage) temperature	-40°C to +70°C (-40°F to +158°F)
Non operating humidity	95% @ 23 to 40°C
Altitude	< 1 829 m (6 000 ft)
Electrostatic discharge	<= 15 kV
Acoustic noise	< 55 dBA
Handling drop (storage)	18 in free-fall (when packaged)
Handling drop	2g 11 mS
Front clearance	50.8 mm (2 in.)
Side clearance	25 mm (1 in.)
Rear clearance	92 mm (3.6 in.)

Front panel controls and features

The following diagram shows the front view of the 1005r server chassis with the bezel cover removed. When the bezel cover is on, only the DVD and USB connections, controls, alarm LEDs, and status LEDs are visible. With the bezel cover removed, both hard drives, the peripheral DVD/CD/CDRW drive, the anti-static connection, and the front serial port are accessible.

Copyright © 2006-2008, Nortel Networks

Front panel controls

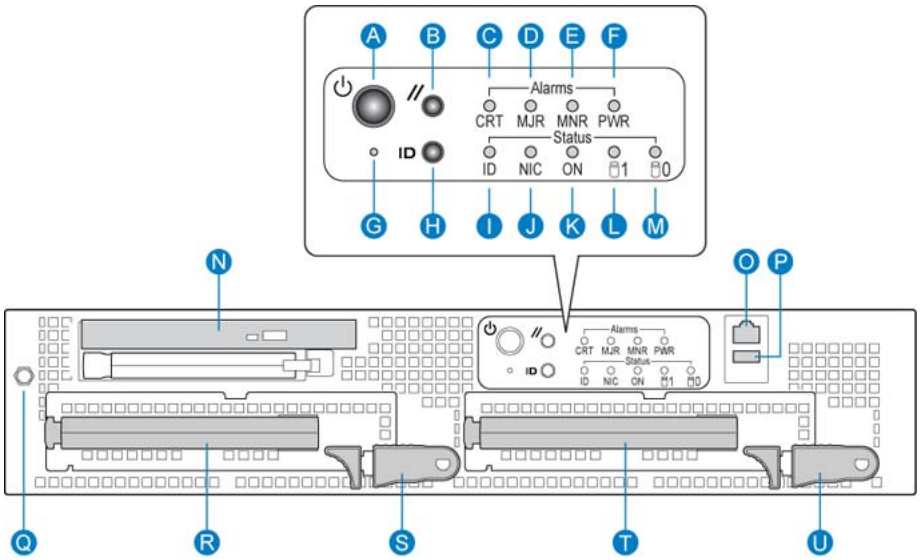

Label	Control or feature	Label	Control or feature
A	Power switch	L	HDD1 activity
B	Reset switch	M	HDD0 activity
C	Critical alarm LED	N	DVD/CD/CDRW LED and eject button
D	Major alarm LED	O	Front serial port
E	Minor Alarm LED	P	USB 2
F	Power Alarm LED	Q	Electrostatic Discharge (ESD) connection
G	NMI switch (not used)	R	Hard drive 1 pull handle
H	ID switch	S	Hard drive 1 release lever
I	ID LED	T	Hard drive 0 pull handle
J	NIC activity LED	U	Hard drive 0 release lever
K	Status LED		

Back panel controls and features

The following diagram shows the back panel controls and features. On the right are the AC power supply banks. The PCI card brackets are in the middle of the back panel while the connectors and ports are along the bottom and left side.

Copyright © 2006-2008, Nortel Networks

Back panel controls and features

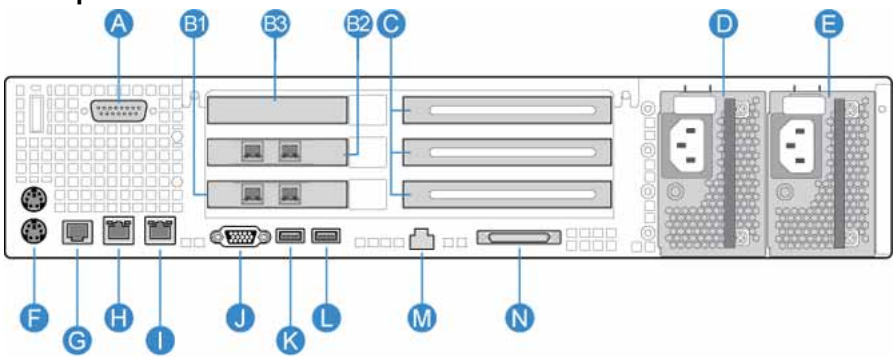

Label	Control or feature	Label	Control or feature
A	DB15 Telco alarm connector (not used)	G	Rear connection to Comm 2 serial port
B1	PCI card #3 dual NIC for High Availability (HA) configuration. For more information about HA, see *High Availability: Installation and Configuration* (NN44200-311).	H	RJ45 NIC 1 connector
B2	PCI card #2 dual NIC for HA configuration. For more information about HA, see *High Availability: Installation and Configuration* (NN44200-311).	I	RJ45 NIC 2 connector
B3	RAID	J	Video connector
C	PCI full-size card brackets. Numbered (1, 2, 3) from top to bottom.	K	USB 1
D	Power Supply 1	L	USB 0
E	Power Supply 2	M	Server management LAN port
F	PS/2 mouse and keyboard connectors	N	External SCSI tape drive

PCI riser assembly

The PCI riser assembly holds the PCI add-in cards; MPB96, RAID and dual Network Interface Card (NIC). For more information about your configuration, see "Valid PCI card configurations" (page 16). The following diagram shows the PCI riser held above the server.

Copyright © 2006-2008, Nortel Networks

PCI riser card

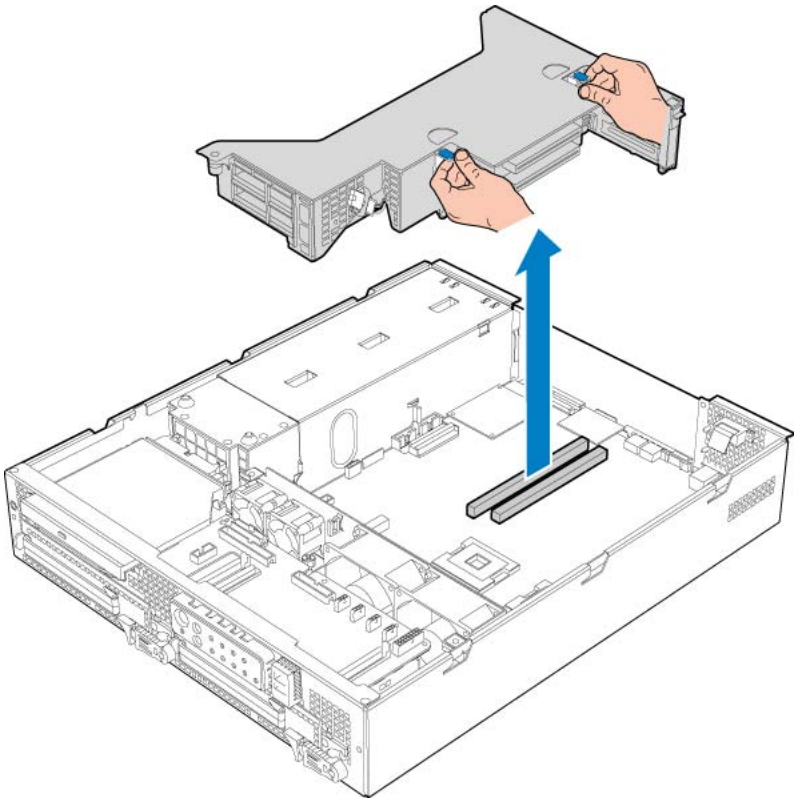

The following picture shows the PCI riser assembly when removed from the 1005r chassis. The PCI riser assembly is shown turned over with low-profile and full-size cards installed.

Copyright © 2006-2008, Nortel Networks

PCI riser card (turned over)

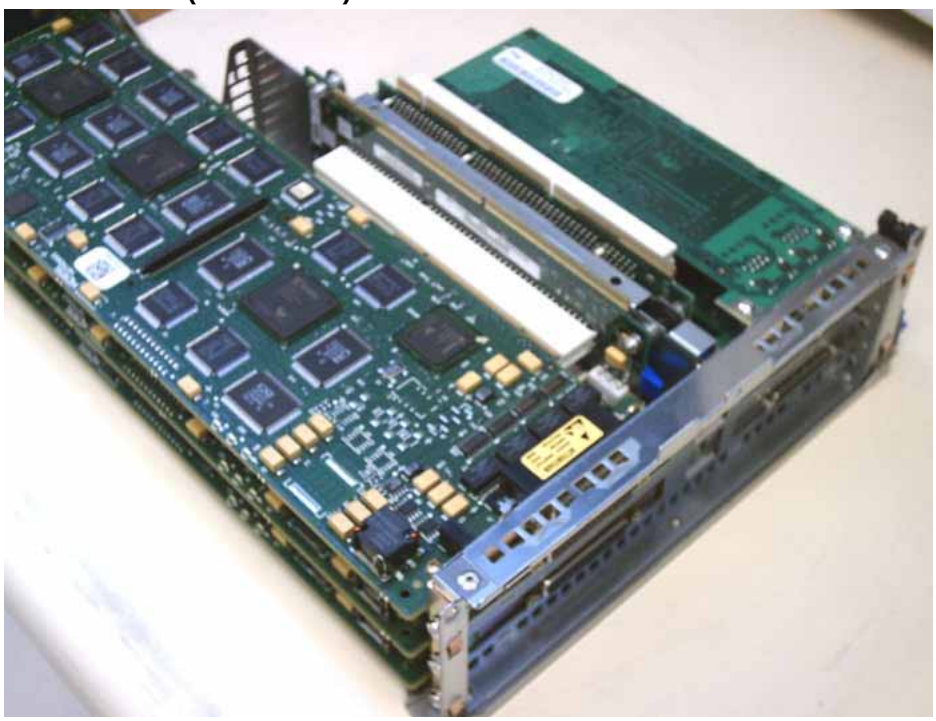

CAUTION
Risk of physical equipment damage
Remove the 1005r from the rack, and place it on a solid surface when replacing or adding cards. The PCI riser assembly requires considerable force when inserting it into the connector, and physical damage can result if the assembly is not properly aligned.

When you place the server on a solid surface such as a workbench, you have a better view of the card alignment, and you can exert the necessary force when inserting the assembly into the connector.

ATTENTION
If The PCI riser assembly must be fully seated to avoid server malfunction.

Valid PCI card configurations

Introduction

There are six PCI card slots; three low-profile and three full-size. Valid configurations of low-profile and full-size cards are shown in the table "1005r PCI card slot configurations" (page 17).

Copyright © 2006-2008, Nortel Networks

Note: Your server configuration depends on what was ordered from Nortel. Therefore, your server may not have all of the slots populated.

When looking at the server from the rear (see "Back panel controls and features" (page 13)), both full-size and low-profile cards are numbered from the top down.

Note: There are two MPB96 board versions; the NTRH40AA, and NTRH40CA. The following table compares the two boards.

Version	Description
NTRH40AA	Has a single DB-44 connector on its faceplate Connects to the CS 1000 or Meridian 1 with an NTRH2014 DS30X cable
NTRH40CA	Has three RJ-45 connectors on its faceplate Connects to the CS 1000 or Meridian 1 with three standard RJ-45 connectorized Ethernet cables For more information about these cables and connecting the NTRH40CA MPB96 board to MGate cards, see *Communication Server and CallPilot Server Configuration (NN44200-312)* or *Meridian 1 and CallPilot Server Configuration (NN44200-302).*

ATTENTION

If you have an NTRH40AA MPB96 board, you must connect the DS30X-1 cable to an MGate card to receive the clock source for the MPB96 board. Failure to connect the DS30X-1 cable to an MGate card can result in noise interference on the remaining voice channels. This restriction does not apply to the NTRH40CA MPB96 board, as it can receive clock source from any of the three DS30 ports.

1005r PCI card slot configurations

Configuration	Card slot type	Slot number	Position	Card type	Meridian 1*/ CS* 1000
Single MPB96	Full size	FS_PCI-1	top	MPB96	MGate 1, 2, 3
		FS_PCI-2	middle	Not used	
		FS_PCI-3	bottom	Not used	
	Low profile	LP_PCI-1	top	RAID	
		LP_PCI-2	middle	Dual NIC	
		LP_PCI-3	bottom	Dual NIC	

Note: When cabling to MGate cards, the RJ-45 connectors are numbered from 1 to 3 on the NTRH40CA MPB96 board starting from the right side of the back panel (next to the power supplies).

Copyright © 2006-2008, Nortel Networks

Configuration	Card slot type	Slot number	Position	Card type	Meridian 1*/ CS* 1000
Three MPB96 (High Capacity)	Full size	FS_PCI-1	top	MPB96	MGate 1, 2, 3
		FS_PCI-2	middle	MPB96	MGate 4, 5, 6
		FS_PCI-3	bottom	MPB96	
	Note: 3 Mgate cards connect to 1 MPB96 When cabling to MGate cards, the RJ-45 connectors are numbered from 1 to 3 on the top NTRH40CA MPB96 board and from 4 to 6 on the middle NTRH40CA MPB96 board starting from the right side of the back panel (next to the power supplies)				
	Low profile	LP_PCI-1	top	RAID	
		LP_PCI-2	middle	Dual NIC	
		LP_PCI-3	bottom	Dual NIC	

Network connectivity

Introduction

This section describes how the 1005r server can be integrated into your network. The integration depends on the type of switch you are using.

ATTENTION

To secure the CallPilot server from unauthorized access, ensure that the CallPilot network is inside your organization's firewall.

Sample network setup: Meridian 1

The following diagram shows a CallPilot server sample network setup with a Meridian 1 switch. The Meridian 1 switch can be one of the following:

- Option 11C or Option 11C Mini
- Option 51C
- Option 61C
- Options 81 and 81C

Copyright © 2006-2008, Nortel Networks

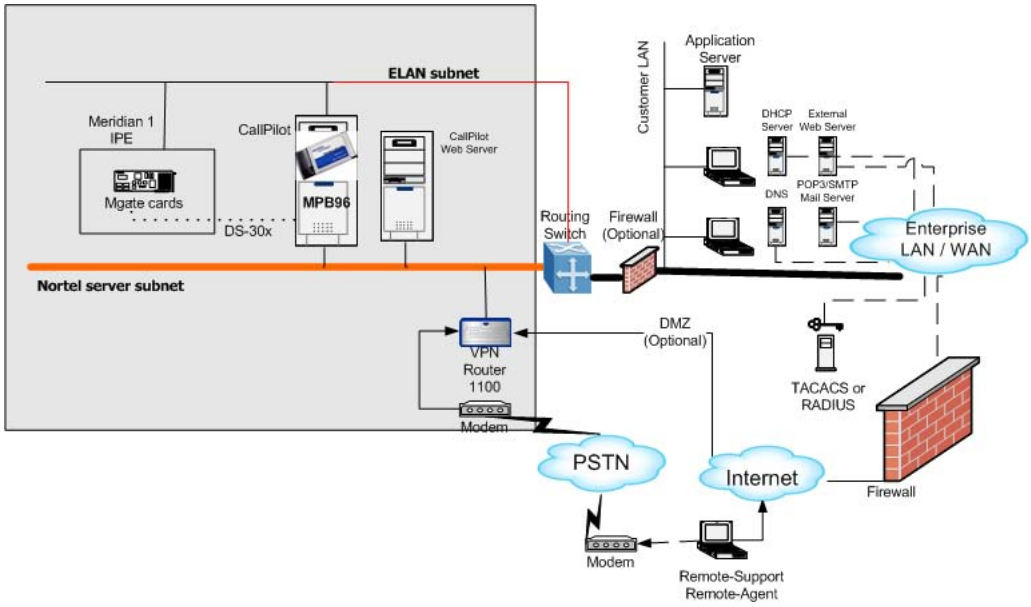

Sample network setup: Communication Server 1000

The following diagram shows a CallPilot server network setup with a Communication Server 1000 (CS 1000) system.

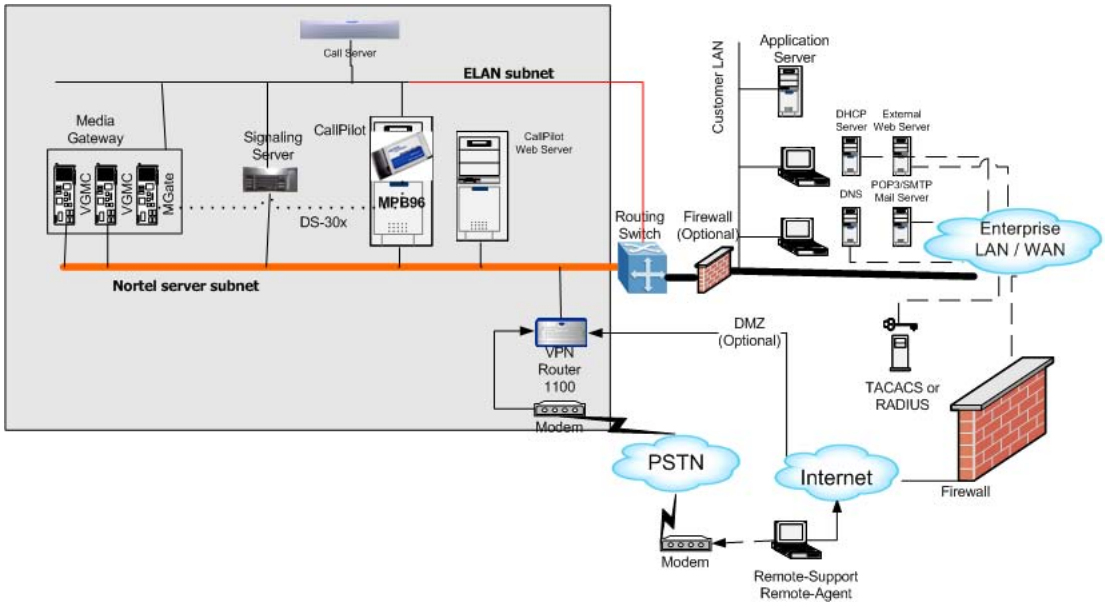

Copyright © 2006-2008, Nortel Networks

In the previous illustration, the telephony LAN (TLAN subnet) provides IP connectivity between the CS 1000 system and the i2004 Internet phonesets. The connection between the call server and media gateway can be point-to-point (or through the LAN), if the system is installed in a distributed data network.

For information about the CS 1000 system and i2004 Internet phoneset bandwidth and network requirements, refer to the *Communication Server for Enterprise 1000 Planning and Installation Guide* (553-3023-210).

Switch connectivity

For more details about how the 1005r server and switch connection is established, refer to the *Installation and Configuration Task List* (NN44200-306).

CallPilot ELAN subnet and Nortel server subnet setup

The 1005r server provides 10/100/1000Base-T Ethernet connectivity through NICs installed in the server. The function of the NIC varies based on switch connectivity, as follows:

Meridian 1 or CS 1000 systems

- One NIC provides connectivity to the ELAN subnet. Connect the NIC labeled NIC2-NickP on the back of the server to the ELAN subnet.

  For information about the purpose and requirements of the ELAN subnet, see the *Planning and Engineering Guide* (NN44200-200).

- The second NIC, labeled NIC1-NickP can be connected to the Nortel server subnet.

  This optional NIC is required only for Meridian 1 or CS 1000 systems that require a Nortel server subnet connection (in addition to the ELAN subnet connection). The Nortel server subnet provides data connectivity between desktop and Web messaging clients, Web-enabled administrative PCs, and the CallPilot server.

Network requirements

Appropriate networking equipment must be available for both the Nortel server subnet and ELAN subnet.

The Nortel server subnet and ELAN subnet must be properly configured for correct CallPilot operation. To ensure correct configuration, Nortel recommends that you consult a network specialist.

Copyright © 2006-2008, Nortel Networks

Remote access connectivity

Use one of the USB connectors on the rear of the 1005r server to connect to an external plug-and-play modem. The modem is used for remote administration and technical support.

RRAS is used to establish the remote access connection to the server. Use either RDC or pcAnywhere to communicate with the CallPilot server.

Supported peripheral devices

Introduction

This section identifies external devices that are supported by the 1005r server.

Device	Description
Modem	Use a 56-Kb/s external modem to provide remote access to the 1005r server. The modem connects to one of the USB connectors on the rear of the server. You cannot use a serial port modem.
Ethernet switch or hub	A 10Base-T Ethernet switch or hub provides the ELAN subnet connection between the 1005r server and the Meridian 1 switch or CS 1000 system. The customer can supply an Ethernet hub or switch from third-party vendors or from Nortel. Since the Ethernet switch or hub is an external device, it requires an AC power source. **ATTENTION** To comply with EMC radiation requirements, a Class A Ethernet hub or switch must be located 10 m (33 ft) away from the 1005r server. Shielded Ethernet cables must be used.
Monitor, keyboard, and mouse	• VGA Monitor with Male DB-15 connector (customer supplied) Since the monitor is an external device, it requires its own AC power source. • Keyboard: (customer supplied) • Mouse: (customer supplied)
Tape drive	• Use an external SCSI tape drive to back up your system. The Tandberg SLR 75 can be ordered with your system.

Copyright © 2006-2008, Nortel Networks

NORTEL

CallPilot Customer Documentation Map

- **Fundamentals**
  - CallPilot Fundamentals Guide (NN44200-100)
- **Planning and Engineering**
  - Planning and Engineering Guide (NN44200-200)
  - Network Planning Guide (NN44200-201)
  - Converging the Data Network with VoIP Guide (NN43001-260)
  - Solution Integration Guide for Communication Server 1000/CallPilot/Contact Center/Telephony Manager (NN49000-300)*
- **Installation and Configuration**
  - Upgrade and Platform Migration Guide (NN44200-400)
  - High Availability: Installation and Configuration (NN44200-311)
  - Installation and Configuration Task List Guide (NN44200-306)
  - **Server Installation Guides**
    - 201i Server Hardware Installation Guide (NN44200-301)
    - 703t Server Hardware Installation Guide (NN44200-304)
    - 1002rp Server Hardware Installation Guide (NN44200-300)
    - 1005r Server Hardware Installation Guide (NN44200-308)
    - 600r Server Hardware Installation Guide (NN44200-307)
  - **Configuration and Testing Guides**
    - Meridian 1 and CallPilot Server Configuration Guide (NN44200-302)
    - T1/SMDI and CallPilot Server Configuration Guide (NN44200-303)
    - Communication Server 1000 System and CallPilot Server Configuration Guide (NN44200-312)
  - **Unified Messaging Software Installation**
    - Desktop Messaging and My CallPilot Installation and Administration Guide (NN44200-305)
- **Administration**
  - Administrator Guide (NN44200-601)
  - Software Administration and Maintenance Guide (NN44200-600)
  - Meridian Mail to CallPilot Migration Utility Guide (NN44200-502)
  - Application Builder Guide (NN44200-102)
  - Reporter Guide (NN44200-603)
- **Maintenance**
  - CallPilot Troubleshooting Reference Guide (NN44200-700)
  - Preventative Maintenance Guide (NN44200-505)
  - **Server Maintenance and Diagnostics**
    - 201i Server Maintenance and Diagnostics Guide (NN44200-705)
    - 703t Server Maintenance and Diagnostics Guide (NN44200-702)
    - 1002rp Server Maintenance and Diagnostics Guide (NN44200-701)
    - 1005r Server Maintenance and Diagnostics Guide (NN44200-704)
    - 600r Server Maintenance and Diagnostics Guide (NN44200-703)
    - Contact Center Manager Communication Server 1000/Meridian 1 & Voice Processing Guide (297-2183-931)*
- **End User Information**

End User Cards

- Unified Messaging Quick Reference Card
- Unified Messaging Wallet Card
- A-Style Command Comparison Card
- S-Style Command Comparison Card
- Menu Interface Quick Reference Card
- Alternate Command Interface Quick Reference Card

End User Guides

- Multimedia Messaging User Guide
- Speech Activated Messaging User Guide
- Desktop Messaging User Guide for Microsoft Outlook
- Desktop Messaging User Guide for Lotus Notes
- Desktop Messaging User Guide for Novell Groupwise
- Desktop Messaging User Guide for Internet Clients
- Desktop Messaging User Guide for My CallPilot
- Voice Forms Transcriber User Guide

**available in summer 2007*

Copyright © 2006-2008, Nortel Networks

Chapter 3
Preparing for installation

In this chapter

- "Installation overview" (page 23)
- "Unpacking the 1005r server" (page 25)
- "Removing the front bezel" (page 27)

Installation overview

Introduction

This section provides an overview of the steps required to install the 1005r server and peripheral devices.

Installation checklist

The following checklist identifies the tasks that must be performed when installing the CallPilot server. For detailed instructions, see "Installing the server" (page 29) When you are finished with the installation, continue with the *Installation and Configuration Task List* (NN44200-306).

> ***Note:*** If you are installing a High Availability system, follow this checklist for each server, with the exceptions listed on "Installing a High Availability system" (page 30)

Step	Description	Check
1	Review the "Installing the CallPilot server" section in the *Installation and Configuration Task List* (NN44200-306), and completed stage 1 of the "Installation checklist."	☐

Copyright © 2006-2008, Nortel Networks

Step	Description	Check
2	Unpack the server, and ensure you have all the items you need (see "Unpacking the 1005r server" (page 25)). Complete the following checklists that are provided in the *Installation and Configuration Task List* (NN44200-306): • "CallPilot software media and documentation checklist" • "CallPilot server hardware checklist"	☐
3	Remove the front bezel and inspect the front panel (see pages "Removing the front bezel" (page 27)).	☐
4	Place the 1005r server in the chosen location (see "Installing the server" (page 29)).	☐
5	Replace the front bezel (see page "To replace the front bezel" (page 30)).	☐
6	Connect the 1005r server and devices as follows: • Connect the monitor, keyboard, and mouse (see "Connecting peripherals to the server" (page 31)). • Connect the modem (see "To connect the modem to the server" (page 33)). • Connect the 1005r server to the ELAN Ethernet switch or hub (Meridian 1 or CS 1000 only) (see "Connecting the server to the ELAN subnet" (page 35)). **ATTENTION** To comply with EMC radiation requirements, a Class A Ethernet switch or hub must be located 10 m (33 ft.) away from the 1005r server. Shielded Ethernet cables must be used. ***Note:*** If you are connecting the optional Nortel server subnet, do not power up unless your antivirus programs and Nortel security updates are installed first. • Connect the 1005r server to the Nortel server subnet Ethernet switch or hub (optional) (see "Connecting the server to the Nortel server subnet (optional)" (page 36)). **ATTENTION** To comply with EMC radiation requirements, a Class A Ethernet switch or hub must be located 10 m (33 ft.) away from the 1005r server. Shielded Ethernet cables must be used.	☐ ☐ ☐ ☐

Copyright © 2006-2008, Nortel Networks

Step	Description	Check
	• Install the software feature dongle (see "Installing the Nortel software feature dongle" (page 37)).	☐
	• Connect the power cords for all devices, and then power them up.	☐
7	Start the 1005r server (see "To start the server" (page 44)).	☐

Conventions for warnings

You could encounter the following types of warnings in this guide. Do not ignore them.

DANGER
Risk of electric shock
Warns you of an immediate electrical hazard which, if not avoided, can result in shock, serious injury, or death.

WARNING
Risk of personal injury
Warns you of a situation in which you can be injured if instructions are not followed exactly as stated.

CAUTION
Risk of equipment damage
Alerts you to situations where data can be lost or damaged, equipment can be damaged, actions can result in service interruption, and productive time can be lost.

ATTENTION
Provides information that is essential to the completion of a task.

Unpacking the 1005r server

Introduction

Follow this procedure to unpack the server and peripherals.

Copyright © 2006-2008, Nortel Networks

WARNING
Risk of personal injury
The 1005r CallPilot server weighs approximately 20 kg (44 lb) when it is shipped from manufacturing. To prevent personal injury, have someone help you to unpack and position the server.

To unpack the equipment

Step	Action

ATTENTION
As you unpack each item, check it off against the packing list, as well as against the following checklists provided in the *Installation and Configuration Task List* (NN44200-306):

- "CallPilot software media and documentation checklist"
- "CallPilot server hardware checklist"

1. Open the cardboard carton containing the server.
2. Remove the server from the carton; set it on a secure surface.
3. Open the cartons containing the monitor, keyboard, mouse, modem, and ELAN Ethernet switch or hub (if supplied), and set the peripherals aside.
4. Remove the dongle from the box and set it aside
5. Put all manuals, DVDs or CDs, operating system disks, and any disks for peripherals in a safe place.
6. Save all packing materials and cartons in case you must return any equipment to the carrier.

—End—

What is next?

Remove the front bezel cover so that you can inspect the front panel of the server. See "Removing the front bezel" (page 27).

Copyright © 2006-2008, Nortel Networks

Removing the front bezel

Introduction

To access the hard drives on the front panel, you must remove the front bezel.

The front bezel covers the electrostatic discharge (ESD) connection, both hard drives, and the DVD/CD/CDRW drive pull handle. The control panel, USB port 2, and the front comm 2 serial port connection are not covered by the front bezel.

To remove the front bezel

Step	Action

CAUTION
Risk of equipment damage
Do not attempt to move or lift the server before removing the front bezel; the server can disengage from the bezel and fall.

1 Loosen the two black captive fasteners on either side of the front bezel.

2 Pull the front bezel off the front panel by the captive fasteners.

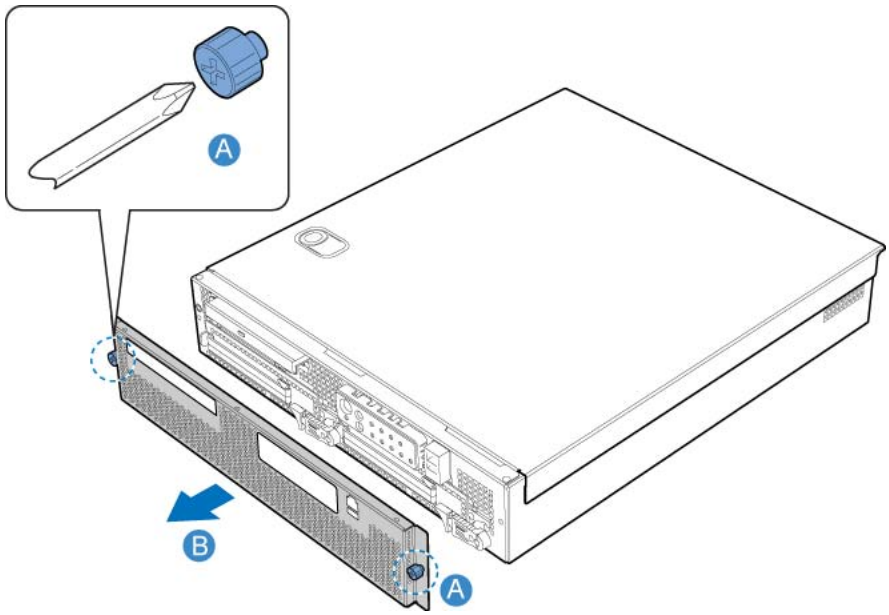

Copyright © 2006-2008, Nortel Networks

3 Do not touch components on the front panel without ESD protection. Attach an ESD strap to your wrist and connect it to a single point ground connection.

—End—

What is next?

Continue with Chapter 5 " Connecting the server to power" (page 41).

Copyright © 2006-2008, Nortel Networks

Chapter 4
Installing the server and peripheral devices

In this chapter

"Installing the server" (page 29)

"Installing a High Availability system" (page 30)

"Inspecting the modem" (page 31)

"Connecting peripherals to the server" (page 31)

"Connecting the server to the ELAN subnet" (page 35)

"Connecting the server to the Nortel server subnet (optional)" (page 36)

"Installing the Nortel software feature dongle" (page 37)

Installing the server

Introduction

Before you install the 1005r server, ensure that the chosen location meets the requirements identified on the "Site inspection checklist" provided in the *Installation and Configuration Task List* (NN44200-306).

To install the server

Place the 1005r server in its chosen location. If you are installing the server in a rack cabinet, follow the instructions provided with the slide rails.

WARNING
Do not connect the server to the power yet.

Copyright © 2006-2008, Nortel Networks

ATTENTION

The 1005r server is supplied with industry standard 48.3 cm (19 in.) rack rails that can accommodate racks with a maximum depth of 61 cm (24 in.) between the mounting posts. Check the rack you are using and ensure that the Nortel supplied server rack rails are suitable for your specific installation requirements. For depths greater than 61 cm (24 in.), Nortel recommends that you purchase a third-party rack shelf that can safely hold up to 34 kg (75 lb.).

To replace the front bezel

Step	Action
	When the CallPilot server is in its final location, replace the front bezel.
1	Align the front bezel with the captive fasteners on either side of the front bezel with the threaded holes in the front panel.
2	Tighten the captive fasteners by hand.

—End—

What is next?

Connect peripheral devices as described in the remainder of this chapter.

Installing a High Availability system

The High Availability configuration is only supported on the 1005r platform.

In a High Availability configuration, a pair of peer CallPilot 1005r servers is used in the place of a single server. Both servers are connected to the same switch and are configured so that one CallPilot server is active (that is, processing calls) and the other is standing by, ready to take over for the first server if the active server fails due to a pre-determined failure condition. The High Availability feature supports both automatic failovers, where the software detects an error condition and triggers a failover to the standby server, and manual failovers which are administrator initiated.

For a High availability system, Nortel recommends that you install both servers on the same rack, preferably one server directly below the other. This allows for greater ease in administration. Clearly label each server for easy identification.

Follow the installation procedures in this document for each server, with the following exceptions:

- Do not connect the server to the Nortel Server Subnet, or the ELAN subnet until directed to do so in the Server and Switch Configuration guide.

Copyright © 2006-2008, Nortel Networks

- The two servers are delivered with only one dongle. It does not matter which server you connect the dongle to until you configure the servers.

For more information about the High Availability feature, see *High Availability: Installation and Configuration* (NN44200-311).

Inspecting the modem

Introduction

You require a modem to support remote dial-up access to the CallPilot server. Nortel technical support also connects to your CallPilot server for troubleshooting purposes. Nortel connects to your server only when you request technical assistance.

Required equipment

To install the modem, you need the following equipment:

- USB modem
- RJ-11 analog phone cord
- USB cable (supplied with the modem)
- analog line jack

Serial port modems with RS-232 connections are not supported on the 1005r.

What is next?

Continue with "Connecting peripherals to the server" (page 31).

Connecting peripherals to the server

Rear panel connectors

The following diagram shows the connectors on the rear panel.

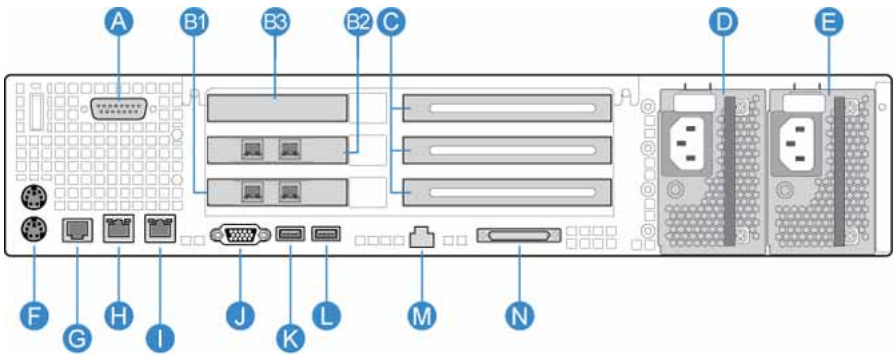

Label	Control or feature	Label	Control or feature
A	DB15 Telco alarm connector (not used)	G	Rear connection to Comm 2 serial port

Copyright © 2006-2008, Nortel Networks

Label	Control or feature	Label	Control or feature
B1	PCI card #3 dual NIC for HA configuration. For more information about HA, see *High Availability: Installation and Configuration* (NN44200-311).	H	RJ45 NIC 1 connector
B2	PCI card #2 dual NIC for High Availability (HA) configuration. For more information about HA, see *High Availability: Installation and Configuration* (NN44200-311).	I	RJ45 NIC 2 connector
B3	RAID	J	Video connector
C	PCI full-size card brackets. Numbered (1, 2, 3) from top to bottom.	K	USB 1
D	Power Supply 1	L	USB 0
E	Power Supply 2	M	Server management LAN port
F	PS/2 mouse and keyboard connectors	N	External SCSI tape drive

To connect the mouse, keyboard, and monitor to the server

Step	Action
1	Place the monitor, keyboard, and mouse in the same location as the server.
2	Plug the keyboard and mouse cables into the PS/2 connectors on the rear panel (see "Rear panel connectors" (page 31)).
3	Plug the monitor into the video connector on the rear panel. Tighten the screws on the connector.
4	Ensure that a single-point ground reference is available for all the power outlets serving the CallPilot server and its peripherals. Before the CallPilot server installation, a qualified electrician must implement the single-point ground reference requirement between the power outlets of the CallPilot server and the power outlets of the switch.
5	Connect the power cord to the monitor and plug the other end into a wall receptacle or power bar.
6	Turn on the monitor.

—End—

Copyright © 2006-2008, Nortel Networks

To connect the modem to the server

Step	Action
1	Connect one end of the telephone cable to the modem RJ-11 jack labeled LINE.
2	Connect the other end of the telephone cable to the RJ-11 jack in the wall.
3	Connect one end of the USB cable into the modem.
4	Connect the other end of the USB cable into either USB port 1 on the rear panel (long term) or USB port 2 on the front panel (short term).

—End—

To connect the external SCSI tape drive

Step	Action

Note : *The external SCSI tape drive is a plug and play device. For a High availability system you may wish to share one tape drive between the two servers.*

1. Set the SCSI ID dial switch on the tape drive to SCSI ID 6.
2. With the power switch off, connect the external SCSI tape drive to the port labeled N on the rear panel. See "Rear panel connectors" (page 31).
3. Plug the tape drive into the same single-point ground and A/C power as the rest of the system.
4. Make sure the SCSI terminator is connected to the tape drive before powering on the tape drive.
5. Power on the tape unit.

Copyright © 2006-2008, Nortel Networks

SLR75 tape drive installed on 1005r

6 The tape drive is plug-and-play and the required drivers are already installed on your system.

7 You must run the device scan initiation in device manager to detect the drive.

   a. Choose Start → My Computer →Properties →Hardware → Device Manager from the desktop.

   b. Select Action → Scan for Hardware changes.

8 The tape drive is ready for use.

—End—

What is next?

Continue with "Connecting the server to the ELAN subnet" (page 35).

Copyright © 2006-2008, Nortel Networks

Connecting the server to the ELAN subnet

Introduction

Connect the CallPilot server to the Meridian 1 switch or CS 1000 system using the ELAN subnet.

Note: If you are installing a High Availability system, do not connect either sever to the ELAN subnet. The connection to the ELAN subnet is made when you configure the system.

ATTENTION

For important considerations about using the ELAN subnet in your network, see the *Planning and Engineering Guide* (NN44200-200).

ATTENTION

To comply with EMC radiation requirements, a Class A Ethernet switch or hub must be located 10 m (33 ft.) away from the 1005r server. You must use shielded Ethernet cables.

To connect the server to the ELAN subnet

Step	Action
1	See the diagram on page "Rear panel connectors" (page 31) to locate the ELAN Ethernet connector.
2	Connect an RJ-45 network cable from the ELAN Ethernet switch or hub to the ELAN connector on the server. ***Note:*** The ELAN Ethernet switch or hub is optional if you use a cross-over network cable to make a direct point-to-point connection from the server to the switch. However, if you choose to establish a direct point-to-point ELAN connection, no other device can connect to the ELAN subnet.
3	At the switch, connect the ELAN network cable to the ELAN Ethernet interface. Complete the connection from the transceiver to the switch.

DANGER

Risk of fire hazard

Do not install a Media Access Unit (MAU) in ducts, plenums, or other spaces used for environmental air. Do not install a MAU above a false ceiling or below a raised floor, unless you can confirm that these spaces are not used to convey environmental air.

Copyright © 2006-2008, Nortel Networks

—End—

What is next?

IF the server is	THEN
connected to a Nortel server subnet	continue with "Connecting the server to the Nortel server subnet (optional)" (page 36).
not connected to a Nortel server subnet	continue with installing the software feature dongle. See "Installing the Nortel software feature dongle" (page 37).

Connecting the server to the Nortel server subnet (optional)

Introduction

This section provides instructions to connect the server to the Nortel server subnet.

Note 1: The Nortel server subnet is optional. However, it is required to support desktop and Web messaging users.

Note 2: If you are installing a High Availability system, do not connect either sever to the Nortel Server Subnet. The connection to the Nortel Server Subnet is made when you configure the system.

ATTENTION

To comply with EMC radiation requirements, a Class A Ethernet switch or hub must be located 10 m (33 ft.) away from the 1005r server. Shielded Ethernet cables must be used.

To connect the server to the Nortel server subnet

Step	Action
1	See the diagram on page "Rear panel connectors" (page 31) to locate the CLAN connection.
2	Connect an RJ-45 network cable from the Nortel server subnet Ethernet switch or hub to the CLAN connector.

—End—

Copyright © 2006-2008, Nortel Networks

What is next?

Continue with "Installing the Nortel software feature dongle" (page 37).

Installing the Nortel software feature dongle

Introduction

The software feature key is a security device that stores the unique serial number of the server. The feature key is embedded in the Nortel software feature dongle, which plugs into USB port 0 on the rear panel.

> ***Note:*** Only one dongle is shipped with a pair of High Availability servers. It doesn't matter which server you install the dongle in until you configure the servers later on.

The following diagram shows the dongle plugged into the back panel of the server:

Dongle installed on the server.

To install the software feature dongle

Step	Action
1	Ensure that there is nothing plugged into USB port 0 on the rear panel.
2	If the software feature key is not preinstalled in the dongle, insert it into the software feature slot on the dongle. Insert the software

Copyright © 2006-2008, Nortel Networks

feature key with the data contact facing down and away from the embossed i. See "Installing the. feature key." (page 38).

Dongle without feature key

3 To eject a software feature key, insert a straightened paper clip into the side access hole.

a. Push the paper clip in the direction of the software feature key.

Note: In the following figure, label 1 is the data contact, and label 2 is the ground.

Installing the. feature key.

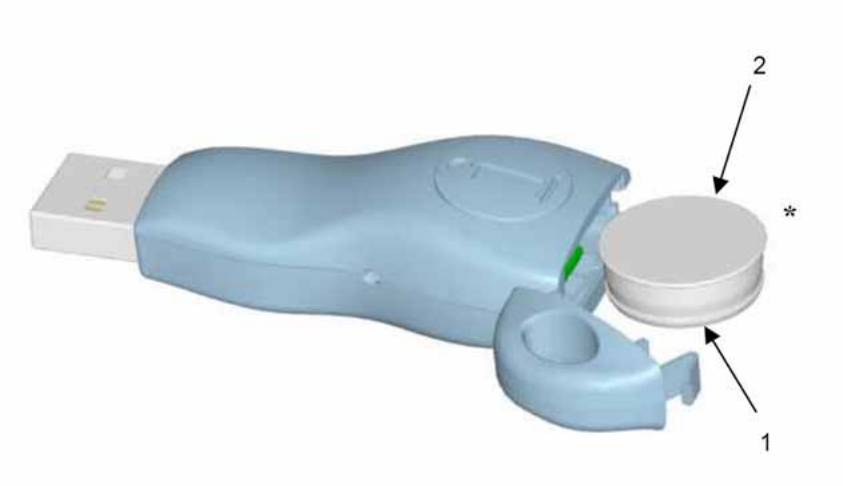

4 Plug the dongle into USB port 0 on the rear panel of the server.

Note: Due to system driver allocations, the dongle must be installed in USB port 0.

—End—

Copyright © 2006-2008, Nortel Networks

What is next?

Continue with Chapter 5 " Connecting the server to power" (page 41).

Copyright © 2006-2008, Nortel Networks

Copyright © 2006-2008, Nortel Networks

Chapter 5
Connecting the server to power

In this chapter

- "Safety precautions" (page 41)
- "Locating the power supply modules" (page 41)
- "About the power supply module" (page 42)
- "Connecting the server to power" (page 42)

Safety precautions

Equipment handling guidelines

External power equipment, such as an uninterruptible power supply (UPS), is usually very heavy. This equipment requires special handling procedures and additional personnel for unloading and installation. Be aware of weight distribution, and prevent the equipment room floor from being overly stressed.

Safety information

DANGER
Risk of electric shock
Procedures involving electrical connections must only be performed by qualified personnel.

Ensure that you obey all displayed warning notices on power equipment and connections.

Locating the power supply modules

Introduction

Both AC power supply modules are installed prior to shipping. The following diagram shows the location of the power supply modules in the rear panel (D and E):

Copyright © 2006-2008, Nortel Networks

1005r rear panel

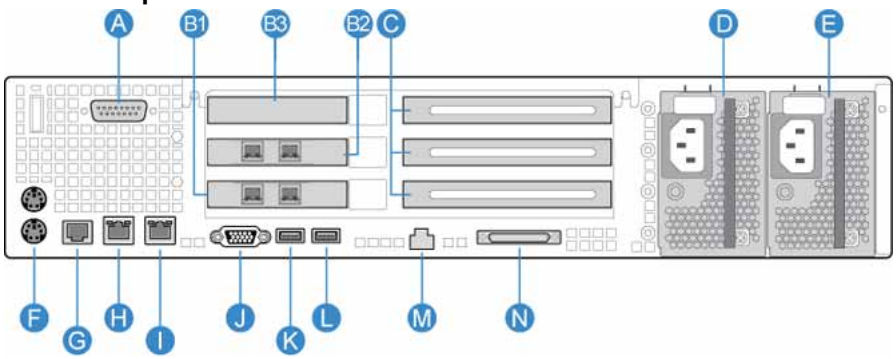

About the power supply module

After you power up the server (later in this guide), the power supply module LED indicates its status.

A green LED on each power supply module indicates that the modules are working properly. If the LEDs are unlit or red, the module is failing or has failed. A problem with a power supply module is also indicated if the PWR or MJR LED on the front of the server turns red.

Rack power and grounding

To ensure a complete power and grounding installation:

- In rack-mount server installations, ensure the CallPilot server chassis and equipment racks are isolated from other foreign sources of ground. Acceptable isolation methods include: isolation pads, grommeted washers, chassis side-rail strips, and nonconducting washers.
- In rack-mount server installations where other equipment is also installed in the same rack, ensure that all equipment derives ground from the same service panel as CallPilot and the switch.

Connecting the server to power

Before you begin

Ensure that proper power and grounding are available for all the power outlets serving the CallPilot server and its associated peripherals. Power for these devices must be wired and fused independently of all other receptacles, and referenced to the same ground as the PBX system.

A qualified electrician must implement the single-point ground reference as required between the power outlets of the CallPilot server and the power outlets of the switch.

Copyright © 2006-2008, Nortel Networks

Provide a sufficient number of properly grounded power outlets or power bars for all equipment. For more information, refer to grounding and power requirements in this document and in the *Planning and Engineering Guide* (NN44200-200).

The single-point ground (SPG) required by the system can be an isolated ground (IG) bus or AC equipment ground (ACEG) bus in the service panel or transformer. The system must be connected to safety ground or protective earth in accordance with NEC requirements. For international use, the system must be connected to safety ground/protective earth in accordance with Paragraph 2.5 of EN60950/IEC950.

> ***Note:*** See *Large System: Planning and Engineering* (553-3021-120) for a complete description of approved ground sources and methods. Insulated ground wire must be used for system grounding.

Before you connect the server to the power source, review the following diagram to ensure that all peripheral hardware devices are in place.

1005r server in a network.

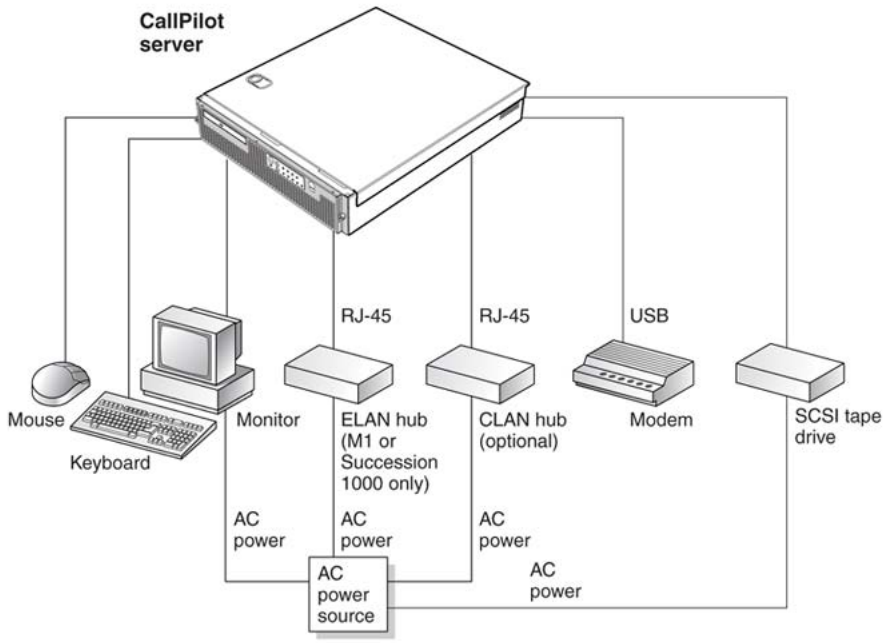

Copyright © 2006-2008, Nortel Networks

To connect the 1005r AC server to power

Step	Action

WARNING
Risk of personal injury, risk of hardware failure
The power outlets used by the CallPilot server and its peripheral devices must be connected to the same single-point ground reference as the one used by the switch with MGate cards connected to the CallPilot server. If this requirement is not met, power transients can cause personal injury, hardware failure, or both. See the *Installation and Configuration Task List* (NN44200-306) for more information about single-point grounding requirements.

1. Plug the server AC power cords into the server rear panel.
2. Plug the other ends into an approved wall receptacle or power bar.

—End—

To start the server

Step	Action

1. Press the server power switch to start the server.
2. Observe the Power-On Self Test (POST) and initialization messages on the monitor.
3. Let the mini-setup sequence run until you are prompted to log on to the operating system.

   Note: The system can perform multiple reboots. This is normal.

4. Ensure that the operating system logon window appears on the monitor.

   Note: If the logon window does not appear, see the *1005r Server Maintenance and Diagnostics* (NN44200-704) guide for troubleshooting instructions.

5. Log into Windows.
6. CallPilot Manager wizard starts automatically.

Copyright © 2006-2008, Nortel Networks

7 Use the wizard to configure your system. For further details, see the *Installation and Configuration Task List* (NN44200-306).

—End—

Copyright © 2006-2008, Nortel Networks

Copyright © 2006-2008, Nortel Networks

Appendix A
EMC emission level protection for the 1005r Server

To lower the EMC emission level, ferrite cores are installed with one loop (see the following diagram) on the following external cables:

- Ferrite Core (TDK and part number ZCAT3035-1330)—for the triple DS30X I/O cable (Nortel and part number NTRH2014E6). There are three ferrite cores at each end of the cable.

CAUTION
Risk of equipment damage
The ferrite cores are preinstalled on the provided cables. It is not your responsibility to attach these ferrite cores to these cables. However, you must ensure that these ferrite cores are in place to keep the EMC emission levels low.

Copyright © 2006-2008, Nortel Networks

Ferrite cores secured to an external cable

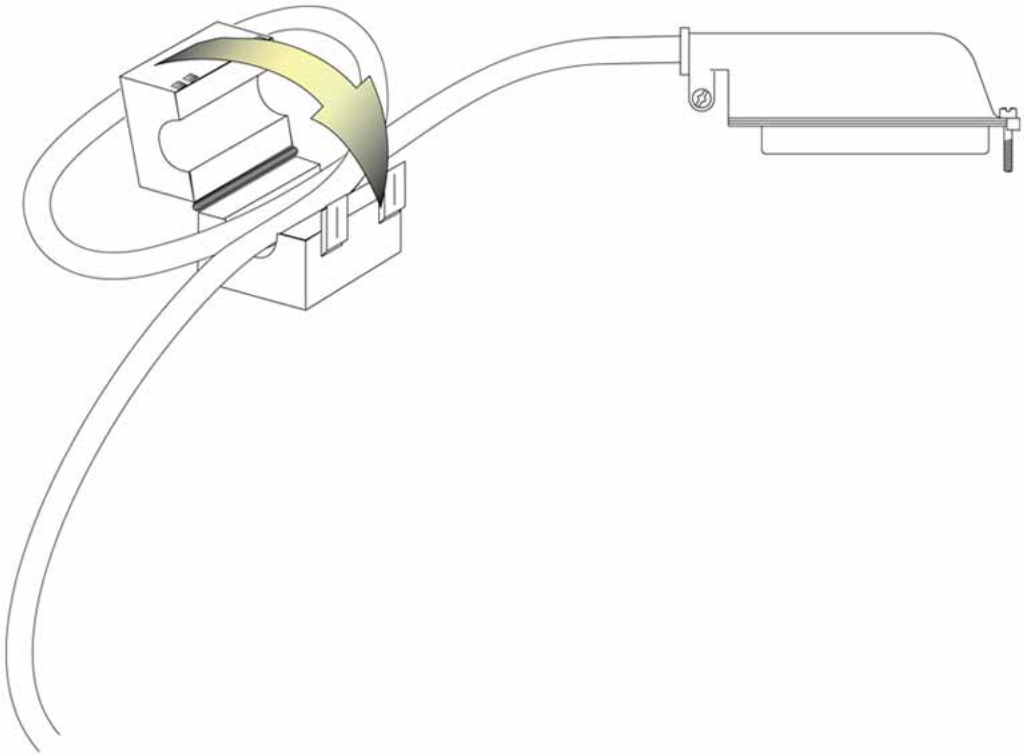

The ferrite cores are secured to the appropriate cable with plastic enclosure clips. Tie wraps are added to the cable loop.

Copyright © 2006-2008, Nortel Networks

Index

Symbols/Numerics

1005r server
  back panel 13
  dimensions and weight 12
  ELAN
    connection, establishing 35
  environmental specifications 12
  front bezel
    removing 27
    replacing 30
  front panel 12
  installing 29
  PCI card slots 16
  PCI riser assembly 14
  peripheral devices, supported 21
  power connection, establishing 42
  starting 44

C

checklist, installation 23
CLAN
  media access control address 36
connecting peripherals to the server 31
connecting the server 42
connectivity
  Ethernet 20
  remote 21
copyright 2
CS 1000 and CallPilot server network
    diagram 19
Customer LAN
  see CLAN 36

D

devices, peripheral
  Ethernet hub 21
  keyboard 21
  modem 21
  monitor 21
  mouse 21
diagram
  1005r server in network 43
  back panel 13, 31, 42
    slot locations 13
  connection
    network, CS 1000 and CallPilot
        server 19
    network, M1 and CallPilot server 18
  dongle
    installed 37
    installing 38
    without feature key 38
  front bezel 27
  front panel 13
  PCI and ISA connectors 14
  PCI riser 14, 15
  server connections for the power cord
      and peripherals 31
  SLR75 tape drive 34
dimensions, 1005r server 12
dongle 37
  installing 37

E

ELAN
  connecting to the server 35

Copyright © 2006-2008, Nortel Networks

environmental specifications 12
equipment
  unpacking 26
Ethernet hub
  description 21

F

fax modem
  required equipment 31
features
  server 11
features, front panel
  diagram 12
front bezel 27
  removing 27
  replacing 30

I

illustration
  TLAN 19
installation checklist 23
IRQ mapping table 18

K

keyboard
  connecting to the server 32
  description 21
keylock 37

M

M1 and CallPilot server network diagram 18
modem 31
  connecting to the server 33
  description 21
  required equipment 31
monitor
  connecting to the server 32
  description 21
mouse
  connecting to the server 32
  description 21

N

network
  connectivity 18
  protocols, supported 20
network interface cards 20
Nortel Server Subnet
  connecting the server 36

P

part number
  Ethernet hub 21
  keyboard 21
  modem 21
  monitor 21
  mouse 21
PCI and ISA connectors
  diagram 14
PCI card slots 16
peripheral devices 21
  connecting to the server 31
  Ethernet hub 21
  keyboard 21
  modem 21
  monitor 21
  mouse 21
power connection
  AC server 44
power distribution rationale 42
power supply
  connecting server to power 42
  module location 41
  overview 41
  rack power and grounding 42
protocols, supported network 20

R

rack power and grounding 42
remote access
  connectivity 21

S

safety information 41
SCSI tape drive
  connecting to the server 33
serial number of the server 37
server
  connecting peripherals 31
  environmental specifications 12

Copyright © 2006-2008, Nortel Networks

power connection 42
serial number 37
slot
assignments 16
configuration
software feature key 37
specifications, environmental 12

T

telephony LAN
See TLAN 20
TLAN
illustration 19
trademarks 2

U

unpacking
equipment 26

W

warnings, conventions 25
weight, 1005r server 12

Copyright © 2006-2008, Nortel Networks

Copyright © 2006-2008, Nortel Networks

Nortel CallPilot

1005r Server Hardware Installation

Copyright © 2006-2008, Nortel Networks
All Rights Reserved.

Publication: NN44200-308
Document status: Standard
Document version: 01.06
Document date: 15 May 2008

To provide feedback or report a problem in this document, go to www.nortel.com/documentfeedback.

Sourced in Canada

The information in this document is subject to change without notice. The statements, configurations, technical data, and recommendations in this document are believed to be accurate and reliable, but are presented without express or implied warranty. Users must take full responsibility for their applications of any products specified in this document. The information in this document is proprietary to Nortel Networks.

*Nortel, the Nortel logo, and the Globemark are trademarks of Nortel Networks.

*Microsoft, MS, MS-DOS, Windows, and Windows NT are registered trademarks of Microsoft Corporation.

All other trademarks and registered trademarks are the property of their respective owners.