Nortel Communication Server 1000

Basic Network Feature Fundamentals

Release: 7.0
Document Revision: 04.01

www.nortel.com

NN43001-579

Nortel Communication Server 1000
Release: 7.0
Publication: NN43001-579
Document release date: 4 June 2010

Copyright © 2003-2010 Nortel Networks. All Rights Reserved.

While the information in this document is believed to be accurate and reliable, except as otherwise expressly agreed to in writing NORTEL PROVIDES THIS DOCUMENT "AS IS" WITHOUT WARRANTY OR CONDITION OF ANY KIND, EITHER EXPRESS OR IMPLIED. The information and/or products described in this document are subject to change without notice.

Nortel, Nortel Networks, the Nortel logo, and the Globemark are trademarks of Nortel Networks.

All other trademarks are the property of their respective owners.

Contents

New in this release 9

Features 9

RLI and DMI enhancement 9

Other changes 9

Revision History 9

How to get help 11

Getting help from the Nortel web site 11

Getting help over the telephone from a Nortel Solutions Center 11

Getting help from a specialist by using an Express Routing Code 12

Getting help through a Nortel distributor or reseller 12

Introduction 13

Subject 13

Applicable systems 13

Intended audience 14

Conventions 14

Related information 14

Basic/Network Alternate Route Selection 17

Contents 17

Overview 18

Access codes 18

BARS access code 19

NARS access codes 19

End-of-dial timing 19

Network translation 20

11-digit BARS or NARS translation 20

Uniform Dialing Plan (UDP) 21

Zone Based Dialing 21

UDP for on-net calling 21

UDP for off-net calling 23

On-net to Off-net conversion 26

Feature interactions 29

Flexible Numbering 29

Copyright © 2003-2010 Nortel Networks. All Rights Reserved.

Flexible Numbering Plan (FNP) 29
Dialing transparency 30
Automatic least-cost routing 30
Route eligibility 31
Digit manipulation 31
Time of day routing 32
Routing control 33
Network Class of Service map (NMAP) 33
Invoking routing control 34
Network Class of Service (NCOS) 34
Network control 35
Facility Restriction Level (FRL) 37
Automatic on-net to off-net overflow 38
Multiple DID office code screening 38
Incoming Trunk Group Exclusion (ITGE) 39
Off-net number recognition 40
Supplemental Digit Restriction and Recognition (SDRR) 41
Digit translation/restriction/recognition 42
Free Calling Area Screening (FCAS) 45
BARS or NARS bypass control 45
Network speed call 46
Network call transfer (NXFER) 46
1+Dialing 48
Interchangeable Numbering Plan Area (NPA) codes impact 49
Network signaling (NSIG) 50
Application 51
Requirements 52
Satellite Link Control (SLC) 52
Flexible ESN 0 routing 53
Federal Communication Commission Equal Access Carrier Access Code Expansion Impact 53
Dialing plan considerations 54
Carrier access code dialing sequences with special characters 55
Configuring Equal Access within a network 55
Network traffic measurements 56
TFN001 routing measurements 56
Off-Hook Queuing (OHQ) measurements 56
Call Back Queuing (CBQ) measurements 56
TFN002 Network Class of Service (NCOS) measurements 57
TFN003 incoming trunk group measurements 57
Expensive Route Warning Tone (ERWT) 57
Queuing features 58
Interchangeable Numbering Plan Area (NPA) codes 58

Copyright © 2003-2010 Nortel Networks. All Rights Reserved.

Network queuing 61

Contents 61
Overview 61
Off-Hook queuing (OHQ) 62
- OHQ availability 62
- OHQ offer 63
- OHQ traffic measurements 64
- OHQ interactions 64

Call-Back Queuing (CBQ) 65
- CBQ options 65
- CBQ eligibility 65
- CBQ offer 66
- CBQ callback 67
- CBQ traffic measurements 67
- CBQ interactions 68

Coordinated call-back queuing (CCBQ) 68
- CCBQ eligibility 68
- CCBQ offer 69
- CCBQ call-back 69
- CCBQ traffic measurements 70
- CCBQ interactions 70
- CCBQ limitations 71

Call-Back Queuing to Conventional Mains (CBQCM) 71
- CBQCM eligibility 72
- CBQCM offer 72
- CBQCM call-back 72
- CBQCM traffic measurements 73
- CBQCM limitations 73

Coordinated call-back queuing against Mains (CCBQAM) 74

Implementation 75

Contents 75
Overview 75
BARS 75
- Task summary list 75

NARS 87
- Task summary list 87

1+Dialing for interchangeable NPA codes 100
- Task summary list 101

Equal Access 104
Equal Access restriction for BARS or NARS 104
- Task summary list 105
- Configure Equal Access routing for BARS or NARS 106

Copyright © 2003-2010 Nortel Networks. All Rights Reserved.

Task summary list 107

Basic and Network Authorization Codes 111
Contents 111
Overview 111
Basic Authorization Code (BAUT) 112
Authorization code validation 112
Station Specific Authcode (SSAU) 113
Authcode security enhancements 114
Collect call blocking (Brazil) 116
Direct private network access 124
Electronic lock network wide/electronic lock on private lines 130
Three-wire analog trunk:Commonwealth of Independent States (CIS) 135
Authorization code administration 148
Network Authorization Code (NAUT) 149
Attendant input of authorization code 150

BAUT/NAUT 153
Contents 153
Operating parameters 153
Feature interactions 154
Feature key operations 154
Call Detail Recording (CDR) 155
Authcode input through TIE trunks 155
Direct Inward System Access (DISA) 155
Barge-in or busy verify 156
Centralized attendant service 156
Call forwarding 156
Network Class of Service (NCOS) 156
Network/Basic Alternate Route Selection (NARS/BARS) 156
Network queuing 156
Coordinated Dialing Plan (CDP) 157
Packaging 157
Feature implementation 157
Feature operation 160
Authcode after SPRE 160
Authcode conditionally last 161
Invalid authcodes 161

Virtual office logged out 163
Contents 163
Overview 163
Making an ESA call from a logged out phone 164
The VOLO process 164
When a dialed number is not an ESDN number 165

Copyright © 2003-2010 Nortel Networks. All Rights Reserved.

Register a VOLO Phone with the call server 165

Copyright © 2003-2010 Nortel Networks. All Rights Reserved.

Copyright © 2003-2010 Nortel Networks. All Rights Reserved.

New in this release

The following section details what's new in *Basic Network Feature Fundamentals* (NN43001-579) for Communication Server 1000 Release 7.0.

Features

See the following sections for information about feature changes.

RLI and DMI enhancement

For Communication Server Release 7.0, the range of allowable Route List Index (RLI) and Digit Manipulation Index (DMI) values is increased from 0–999 to 0–1999. For more information about RLI and DMI values, see Table 28 "LD 86: Enter data for each route list associated with ADGT" (page 90).

Other changes

Revision History

June 2010	Standard 04.01. This document is up-issued for Communication Server 1000 Release 7.0.
June 2009	Standard 03.03. This document reflects changes in backing up the database procedures for NARS and BARS.
May 2009	Standard 03.02. This document contains term change. Central Deployment Model was renamed to Zone Based Dialing.
May 2009	Standard 03.01. This document is up-issued to support Communication Server 1000 Release 6.0.
December 2007	Standard 02.02. This document is up-issued to support Communication Server Release 5.5.
June 2007	Standard 01.02. This document is up-issued to remove the Nortel Networks Confidential statement.
May 2007	Standard 01.01. This document is issued to support Communication Server 1000 Release 5.0. This document contains information previously contained in the following legacy document, now retired: *Basic Network Features Fundamentals (553-3001-379)*

Copyright © 2003-2010 Nortel Networks. All Rights Reserved.

August 2005	Standard 3.00. This document is up-issued to support Communication Server 1000 Release 4.5.
September 2004	Standard 2.00. This document is up-issued for Communication Server 1000 Release 4.0.
October 2003	Standard 1.00. This document is a new technical document for Succession 3.0. It was created to support a restructuring of the Documentation Library, which resulted in the merging of multiple legacy technical documents. This new document consolidates information previously contained in the following legacy documents, now retired: • Basic Alternate Route Selections and Network Alternate Route Selection (553-2751-100) • Network Queuing (553-2751-101) • Basic and Network Authorization Codes (553-2751-103)

Copyright © 2003-2010 Nortel Networks. All Rights Reserved.

How to get help

This chapter explains how to get help for Nortel products and services.

Getting help from the Nortel web site

The best way to get technical support for Nortel products is from the Nortel Technical Support web site:

http://www.nortel.com/support

This site provides quick access to software, documentation, bulletins, and tools to address issues with Nortel products. From this site, you can:

- download software, documentation, and product bulletins
- search the Technical Support Web site and the Nortel Knowledge Base for answers to technical issues
- sign up for automatic notification of new software and documentation for Nortel equipment
- open and manage technical support cases

Getting help over the telephone from a Nortel Solutions Center

If you do not find the information you require on the Nortel Technical Support web site, and you have a Nortel support contract, you can also get help over the telephone from a Nortel Solutions Center.

In North America, call 1-800-4NORTEL (1-800-466-7835).

Outside North America, go to the following web site to obtain the telephone number for your region:

http://www.nortel.com/callus

Copyright © 2003-2010 Nortel Networks. All Rights Reserved.

Getting help from a specialist by using an Express Routing Code

To access some Nortel Technical Solutions Centers, you can use an Express Routing Code (ERC) to quickly route your call to a specialist in your Nortel product or service. To locate the ERC for your product or service, go to:

http://www.nortel.com/erc

Getting help through a Nortel distributor or reseller

If you purchased a service contract for your Nortel product from a distributor or authorized reseller, contact the technical support staff for that distributor or reseller.

Copyright © 2003-2010 Nortel Networks. All Rights Reserved.

Introduction

This document is a global document. Contact your system supplier or your Nortel representative to verify that the hardware and software described are supported in your area.

Subject

This document describes networking features and packages that can be configured to meet users' specific requirements.

Note on legacy products and releases

This technical document contains information about systems, components, and features that are compatible with Nortel Communication Server 1000 Release 7.0 software. For more information about legacy products and releases, click the **Technical Documentation** link under **Support & Training** on the Nortel home page:

www.nortel.com

Applicable systems

This document applies to the following systems:

- Communication Server 1000E (CS 1000E) CP PII, CP PIV and CP PM
- Communication Server 1000M Single Group (CS 1000M SG) CP PII, CP PIV
- Communication Server 1000M Multi Group (CS 1000M MG) CP PII, CP PIV
- Meridian 1 PBX 11C Chassis
- Meridian 1 PBX 11C Cabinet
- Meridian 1 PBX 61C CP PII, CP PIV
- Meridian 1 PBX 81C CP PII, CP PIV

Note: When upgrading software, memory upgrades may be required on the Signaling Server, the Call Server, or both.

Copyright © 2003-2010 Nortel Networks. All Rights Reserved.

Intended audience

This document is intended for individuals responsible for administering CS 1000 and Meridian 1 systems.

Conventions

Terminology

In this document, the following systems are referred to generically as system:

- Communication Server 1000E (CS 1000E)
- Communication Server 1000M (CS 1000M)
- Meridian 1

In this document, the following systems are referred to generically as "Small System":

- Meridian 1 PBX 11C Chassis
- Meridian 1 PBX 11C Cabinet

The following systems are referred to generically as "Large System":

- Communication Server 1000M Single Group (CS 1000M SG)
- Communication Server 1000M Multi Group (CS 1000M MG)
- Meridian 1 PBX 61C CP PII, CP PIV
- Meridian 1 PBX 81C CP PII, CP PIV

Related information

This section lists information sources that relate to this document.

Technical Documentation

The following technical documents are referenced in this document:

- *Features and Services Fundamentals* (NN43001-106)
- *Software Input Output Administration* (NN43001-611)
- *Software Input Output Reference — Maintenance* (NN43001-711)

Online

To access Nortel documentation online, click the **Technical Documentation** link under **Support & Training** on the Nortel home page:

www.nortel.com

Copyright © 2003-2010 Nortel Networks. All Rights Reserved.

CD-ROM

To obtain Nortel documentation on CD-ROM, contact your Nortel customer representative.

Copyright © 2003-2010 Nortel Networks. All Rights Reserved.

Copyright © 2003-2010 Nortel Networks. All Rights Reserved.

Basic/Network Alternate Route Selection

Contents

This section contains information on the following topics:

“Overview” (page 18)

“Access codes” (page 18)

“Uniform Dialing Plan (UDP)” (page 21)

“Flexible Numbering” (page 29)

“Dialing transparency” (page 30)

“Automatic least-cost routing” (page 30)

“Digit manipulation” (page 31)

“Time of day routing” (page 32)

“Routing control” (page 33)

“Network Class of Service (NCOS)” (page 34)

“Facility Restriction Level (FRL)” (page 37)

“Automatic on-net to off-net overflow” (page 38)

“Multiple DID office code screening” (page 38)

“Incoming Trunk Group Exclusion (ITGE)” (page 39)

“Off-net number recognition” (page 40)

“Supplemental Digit Restriction and Recognition (SDRR)” (page 41)

Copyright © 2003-2010 Nortel Networks. All Rights Reserved.

"Digit translation/restriction/recognition" (page 42)

"Free Calling Area Screening (FCAS)" (page 45)

"BARS or NARS bypass control" (page 45)

"Network speed call" (page 46)

"Network call transfer (NXFER)" (page 46)

"1+Dialing" (page 48)

"Interchangeable Numbering Plan Area (NPA) codes impact" (page 49)

"Network signaling (NSIG)" (page 50)

"Satellite Link Control (SLC)" (page 52)

"Flexible ESN 0 routing" (page 53)

"Federal Communication Commission Equal Access Carrier Access Code Expansion Impact" (page 53)

"Network traffic measurements" (page 56)

"Expensive Route Warning Tone (ERWT)" (page 57)

"Queuing features" (page 58)

"Interchangeable Numbering Plan Area (NPA) codes" (page 58)

Overview

The Basic Alternate Route Selection (BARS) and Network Alternate Route Selection (NARS) features provide comprehensive and flexible networking packages which can be configured to satisfy the specific requirements of an end user's private network. The BARS and NARS packages provide benefits to end users through simplified dialing plans and reduced communications costs.

Access codes

By dialing a one- or two-digit access code, the end user can place a long distance, network, or local call. These BARS and NARS access codes are customer-defined.

Copyright © 2003-2010 Nortel Networks. All Rights Reserved.

BARS access code

To make long distance calls and calls to distant company locations (on-network calls) from the system Node, the caller dials the BARS access code (AC1) followed by the desired number. The BARS access code can be any one- or two-digit number, provided there is no conflict with any other part of the dialing plan. It is a customer-defined option whether the caller hears the dial tone after dialing a BARS access code.

Dialing the BARS access code triggers the BARS software to perform the call processing and routing required for call completion. This is accomplished by means of a network translation table associated with the BARS access code. Normal translation is used for all other call types.

NARS access codes

To access NARS, the end user dials either of the two customer-defined NARS access codes: AC1 (for on-net and long distance calls) and AC2 (for off-net and local calls). Typically, AC1 is 8 and AC2 is 9. However, any one- or two-digit codes can be used, provided that AC1 is different from AC2 and there is no conflict with any other part of the dialing plan. It is a customer-defined option whether the caller hears the dial tone after dialing a NARS access code.

Dialing a NARS access code triggers the NARS software to perform the call processing and routing required for call completion. This is accomplished by means of network translation tables. There is a network translation table associated with each NARS access code. This translation mechanism is used to implement the NARS Uniform Dialing Plan (UDP) for private networks.

End-of-dial timing

Calls routed using BARS or NARS use a software defined Network Interdigit Timer (NIT) to determine end-of-dial timing. This is end-user definable for each customer.

It is defined by responding to the NIT prompt in LD 15 with a number in the range from two to eight. This value indicates the maximum number of seconds allowed between digits being dialed. If the end user does not dial another digit within the time input in response to the NIT prompt, the software considers dialing as being complete.

To achieve shorter call processing times the end user can dial an # (octothorpe, pound, number sign) at the end of a dialed digit string. The # informs the software that all required digits are dialed and that the digits can now be analyzed for call processing purposes. If the end user does not use the #, then the system waits for the NIT to expire prior to analyzing the dialed digits.

Copyright © 2003-2010 Nortel Networks. All Rights Reserved.

Network translation

The normal digit translator reads the dialed network access code, determines if the call is to be processed by BARS or NARS, and selects the appropriate network translation (see Table 1 "Digit translation" (page 20)). BARS or NARS translation determines the method to be used to process the call, refers to Supplementary Digit Restriction and Recognition (SDRR) tables if required, and applies digit restriction or recognition where it is specified. The result of translation is to invoke either route selection with a specified route list, standard call blocking, queuing, or internal recognition.

Table 1
Digit translation

Type	Translation
LOC	3–7
HLOC	3–7
NPA	3–11
HNPA	3–11
NXX	3–8
SPN	1–11

Each Number Plan Area (NPA), NXX, SPN, or Location Code (LOC) associates with only one route list index. In a network with multiple switches sharing Direct Inward Dialing (DID) numbers within the same NXX, Coordinated Dialing Plan (CDP) is needed to route the calls properly.

The craftperson can configure a maximum of 16 000 Location Codes (LOCs) and a maximum of 32 000 Steering Codes (DSC and TSC) on a system.

11-digit BARS or NARS translation

The Electronic Switched Network (ESN) BARS or NARS translates a maximum of 11 digits for route selection. This allows similar codes to be translated differently. This increases the flexibility for network routing, including international calls. For example, NXX1363 becomes 13634 or 13635. More than one code can be handled by the same route list.

The 11- digit translation allows unique nonconflicting routing to a destination. More than one route list can exist for each specific code of a type. For example, the NXX 727 could only translate into one route list previously. With 11-digit translation, as many route lists as are needed to eliminate code conflict or achieve network requirements can be defined by extending translation deeper into the dialed code. Table 1 "Digit translation" (page 20) displays the number of digits that can be translated with present capabilities.

Copyright © 2003-2010 Nortel Networks. All Rights Reserved.

Uniform Dialing Plan (UDP)

The UDP is not a feature of BARS or NARS, but is an operation that enables end users at a system Node, system Main, or conventional Main to dial all calls in a uniform manner regardless of the location of the calling party or the route that the call will take. UDP applies to BARS using off-net number recognition and calling Home Location Code (HLOC) and SPN or NXX codes. LOCs are programmed as NXXs or SPNs.

Note: If the HLOC followed by a trunk access code is dialed, only TIE or Modem or ADM trunk call is allowed. For other trunk types, the call is blocked.

Zone Based Dialing

The Zone Based Dialing (ZBD) feature enables the removal of small, traditional PBX systems in multiple enterprise locations and replaces these with a single high-capacity Call Server model. New customers who plan to setup private networks in multiple locations can also deploy using ZBD.

ZBD is not UDP specific, it can support different dialing plans such as public (E.164) and private (CDP, UDP). It supports only one type of plan at a time (public or private) because the setting DIALPLAN PUB/PRV specifies the type of CLID displayed on the telephone.

For more information about ZBD, see *Dialing Plans Fundamentals* (NN43001-283).

UDP for on-net calling

An on-net call is one that terminates at a customer-owned location. To reach any on-net location, the end user dials the NARS or BARS on-net access code (AC1), followed by seven digits. The dialing format for this call would be:

AC1 * LOC + XXXX (for NARS)

AC1 * SPN + XXXX (for BARS)

Legend:

AC1	=	the one-digit or two-digit BARS/NARS on-net access code
*	=	NARS dial tone (optional)
LOC	=	a three-digit location code assigned for the destination location
SPN	=	a three-digit code assigned for the destination location
XXXX	=	the extension number of the party to be reached at the destination location

Copyright © 2003-2010 Nortel Networks. All Rights Reserved.

Each system, which is part of the BARS or NARS network, is referenced by a unique three-digit location (LOC), Special Number (SPN), or Local Exchange (NXX) code assigned at the system Node. There must be no conflict between the Location Code number assigned for a system and the Numbering Plan Area (NPA) codes, NXX, or other SPN.

A customer-owned location can be either physically connected to the network (by means of private trunk facilities) or virtually connected to the network (by means of public facilities). If a location is virtually connected to the network, the dialed LOC code is translated and converted by the system Node into the public number for the virtual location; for example, the Direct Distance Dialing (DDD) number or the DID number. Using digit manipulation for BARS, an SPN can be changed into the public network Listed Directory Number (LDN).

The following figure illustrates a private network with a typical UDP. An end user at LOC 830 (customer location B) calling extension number 3283 at LOC 777 (customer location H) would first dial 8 (AC1), pause for NARS dial tone (optional), then dial 777-3283. An end user at any other customer location that is part of the network would dial these same numbers to reach extension 3283.

Copyright © 2003-2010 Nortel Networks. All Rights Reserved.

Figure 1
Example of a network with a typical NARS uniform dialing plan

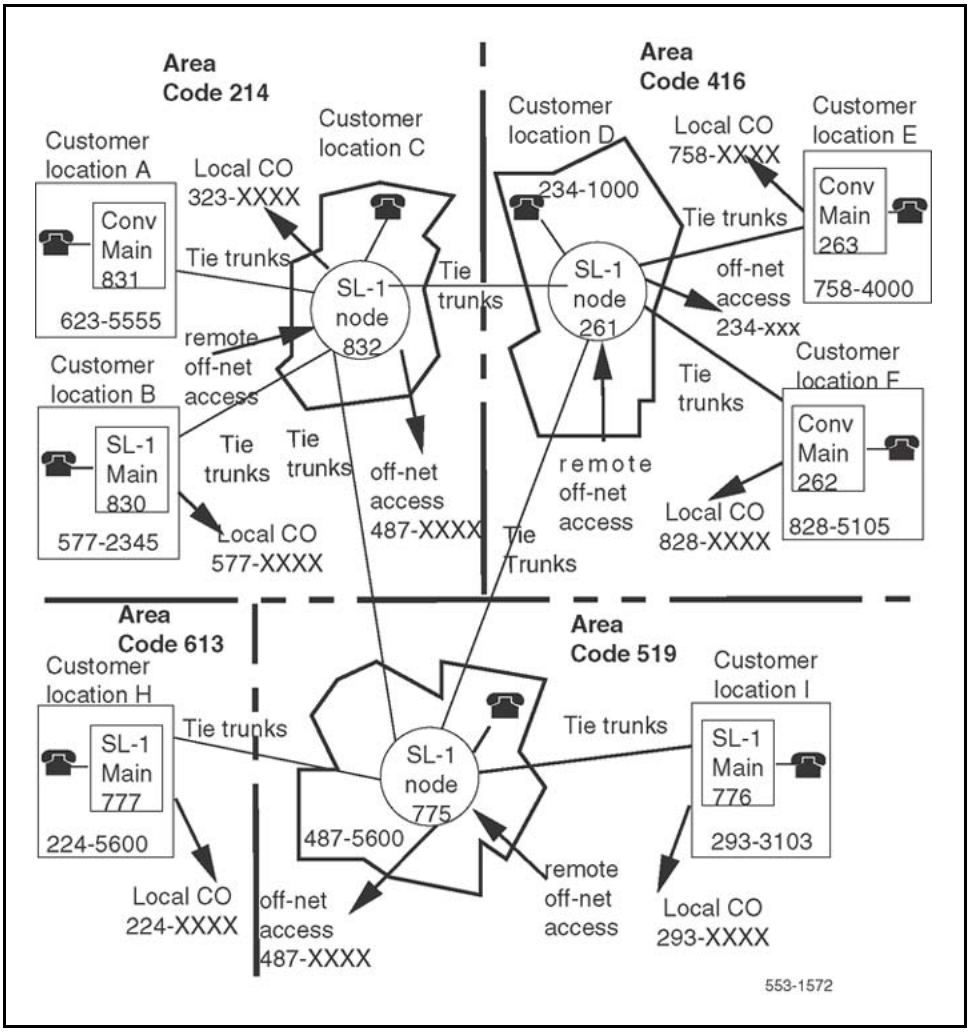

UDP for off-net calling

An off-net call is one that does not terminate at a customer-owned location, even though some on-net facilities can be used to complete a portion of the call routing. If all on-net facilities to a location are busy or blocked, NARS can convert a dialed NARS UDP number to the Listed Directory Number (LDN) or DID number of the destination location, and use an off-net facility to complete the call. Referring to Figure 1 "Example of a network with a typical NARS uniform dialing plan" (page 23), a call would be termed off-net if an end user at LOC 776 called a station number associated with CO 758-XXXX in the foreign area code 416.

Table 2 "Dialing formats for NARS UDP calls" (page 24) and Table 3 "Dialing formats for BARS calls" (page 25) list the dialing formats for the various types of NARS and BARS UDP calls, respectively.

Copyright © 2003-2010 Nortel Networks. All Rights Reserved.

Table 2
Dialing formats for NARS UDP calls

Call type	Dialing format	Code capacity
On-Net (Notes 1, 2, and 3)	AC1 * LOC + XXXX	640
DDD FNPA (Note 1)	AC1 * 1 + NPA + NXX + XXXX	160
Network Speed Call	AC1 * LA + LN	1 - nn
Operator-assisted DDD	AC1 * 0 + NPA + NXX + XXXX	160
International DDD	AC1 * 011 + CC + NN	99
Operator-assisted International DDD	AC1 * 01 + CC + NN	99
DDD HNPA (Note 1)	AC1 or AC2 * 1 + NXX + XXXX	1
DDD Operator	AC2 * 0	1
Local Calls (Note 1)	AC2 * NXX + XXXX	640
Special Local Services	AC2 * SPN	8
Toll-free Calls	AC2 * 800 + NXX + XXXX	1
Toll-free Calls (Note 1)	AC2 * 1 + 800 + NXX + XXXX	1
Toll Special Numbers	AC2 * 900 + NXX + XXXX	1
Toll Special Numbers (Note 1)	AC2 * 1 + 900 + NXX + XXXX	1
Note: If 1+Dialing is used, the On-Net and Local Calls code capacities are increased to 800 and 792 respectively.		
Note: If the code 1XX is reserved for future 1+Dialing use, and not for Network Speed Call codes, then the location code capacity will be reduced to 639 if a three-digit Network Speed Call (NSC) code is used, 632 if a two-digit NSC code is used, or 560 if a one-digit NSC code is used.		
Note: When 1+Dialing is used, Network Speed Call access is in the form of 2XX-9XX as a subset of the location codes utilized in the UDP. The location code capacity is reduced to 799 if a three-digit NSC code is used, 792 if a two-digit NSC code is used, or 720 if a one-digit NSC code is used.		
Legend:		
AC1	Access code for on-net, long distance and Network Speed Calls. Typically the digit "8," but can be either one or two digits in length.	
AC2	Access code for local calls. Typically the digit "9," but can be either one or two digits in length.	
*	Symbol meaning NARS dial tone (optional).	
NPA	Numbering Plan Area (NPA) code. Any number of the form NXX	
HNPA	Home Numbering Plan Area (HNPA) code. Any number of the form NXX	
FNPA	Foreign Numbering Plan Area (FNPA) code. Any number of the form NXX	
CC	Country code. Any one, two, or three digits from 2 to 9.	

Copyright © 2003-2010 Nortel Networks. All Rights Reserved.

Table 2
Dialing formats for NARS UDP calls (cont'd.)

Call type	Dialing format	Code capacity
NN	National Number. Depends on national dialing plan; maximum 12 digits including the Country Code.	
N	Any of the digits from 2 to 9.	
P	The digit 0 or 1.	
X	Any of the digits from 0 to 9.	
LA	List access code. Any one, two, or three digits from 0 to 9.	
LN	List element number. Any one, two, or three digits (0-9, 00-99, 000-999).	
LOC	Three-digit location code for each UDP network location.	
NXX	Local Exchange Code.	
XXXX	Four-digit directory (extension) number.	
SPN	Special numbers: for example, 411, 611, or XXXX.	

Table 3
Dialing formats for BARS calls

Call type	Dialing format
On-Net	(1) AC1 * SPN + XXXX (2) AC1 * NXX + XXXX
DDD FNPA	AC1 * 1 + NPA + NXX + XXXX
Operator-assisted DDD	AC1 * 0 + NPA + NXX + XXXX
International DDD	AC1 * 011 + CC + NN
Operator-assisted International DDD	AC1 * 01 + CC + NN
DDD HNPA (if applicable)	(1) AC1 * 1 + NXX + XXXX (2) AC1 * 1 + NPA + NXX-XXXX (see note)
DDD Operator	AC1 * 0
Local Calls	AC1 * NXX + XXXX
Special Local Services	AC1 * 411, 611 etc.
Toll-free Calls	AC1 * 1 + 800 or 1 + 900 + NXX + XXXX
Note: 1+Dialing is optional; you can simply enter *1 NPA*.	
Legend	
AC1	Access code for on-net, long distance and Network Speed Calls. Typically the digit "9" but can be either one or two digits in length.
*	Symbol meaning wait for BARS dial tone (optional).
NPA	Numbering Plan Area (NPA) code. Any number of the form NXX

Copyright © 2003-2010 Nortel Networks. All Rights Reserved.

Table 3
Dialing formats for BARS calls (cont'd.)

Call type	Dialing format
HNPA	Home Numbering Plan Area (HNPA) code. Any number of the form NXX
FNPA	Foreign Numbering Plan Area (FNPA) code. Any number of the form NXX
CC	Country code. Any one, two, or three digits from 2 to 9.
NN	National Number. Depends on national dialing plan; maximum 12 digits including the Country Code.
N	Any of the digits from 2 to 9.
P	The digit 0 or 1.
X	Any digit from 0 to 9.
SPN	Special Number. Code used to identify other office locations on the network, or a number such as 411 or 611.

On-net to Off-net conversion

For on-net to off-net conversion, the Route List Index (RLI) is configured in Overlay 86 and the conversion data is provisioned in Overlay 90 or the ESN LOC page in Element Manager. From the Location Data Block (NARS only) in LD 90, configure the variable length region codes (NXX) and configure the SAVE prompt for determining the number of digits to extract from the dialed string for DID ranges. If conversion (CNV) is enabled on a RLI entry, the data provided in the LOC block for the destination site is extracted. The Listed Directory Number (LDN) allows for area codes with lengths that are shorter or longer than that of the North American Numbering Plan Area (NPA) length of three-digits thus simplifying on-net to off-net conversion for locations outside of North America. The following figure provides an example of an on-net to off-net North American call scenario.

For an example of an international on-net to off-net call scenario, see Figure 3 "International on-net to off-net call scenario" (page 28). For more information on the various prompts and responses for LD 86 and LD 90, see *Software Input Output Administration* (NN43001-611).

Copyright © 2003-2010 Nortel Networks. All Rights Reserved.

Figure 2
North American on-net to off-net call scenario

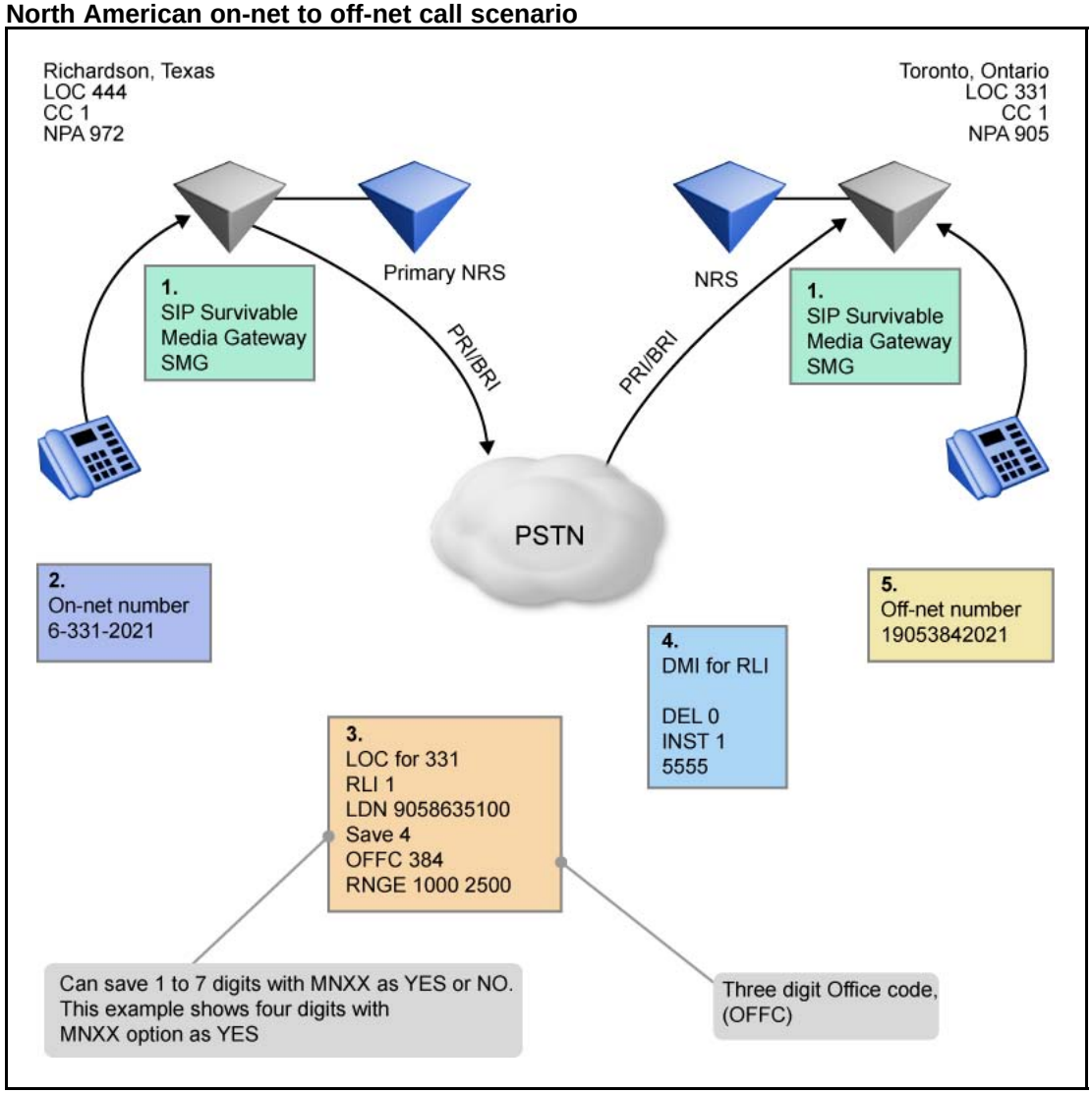

North American call scenario

1. The Richardson SIP SMG and Toronto SIP SMG are in survivable mode due to all on-net facilities being busy or blocked. Conversion (CNV) is enabled in RLI for the Toronto LOC 331.
2. The user at location 444 dials the on-net number 6-331-2021.
3. Last 4 (SAVE) digits are examined. Since 2021 falls in the configured range for OFFC 384, NARS converts the dialed NARS UDP number (6-331-2021) to the DID number of the destination location, 905-384-2021.
4. North American dialing prefix (1) is inserted using a DMI.
5. The call is routed to the off-net facility.

Copyright © 2003-2010 Nortel Networks. All Rights Reserved.

Figure 3
International on-net to off-net call scenario

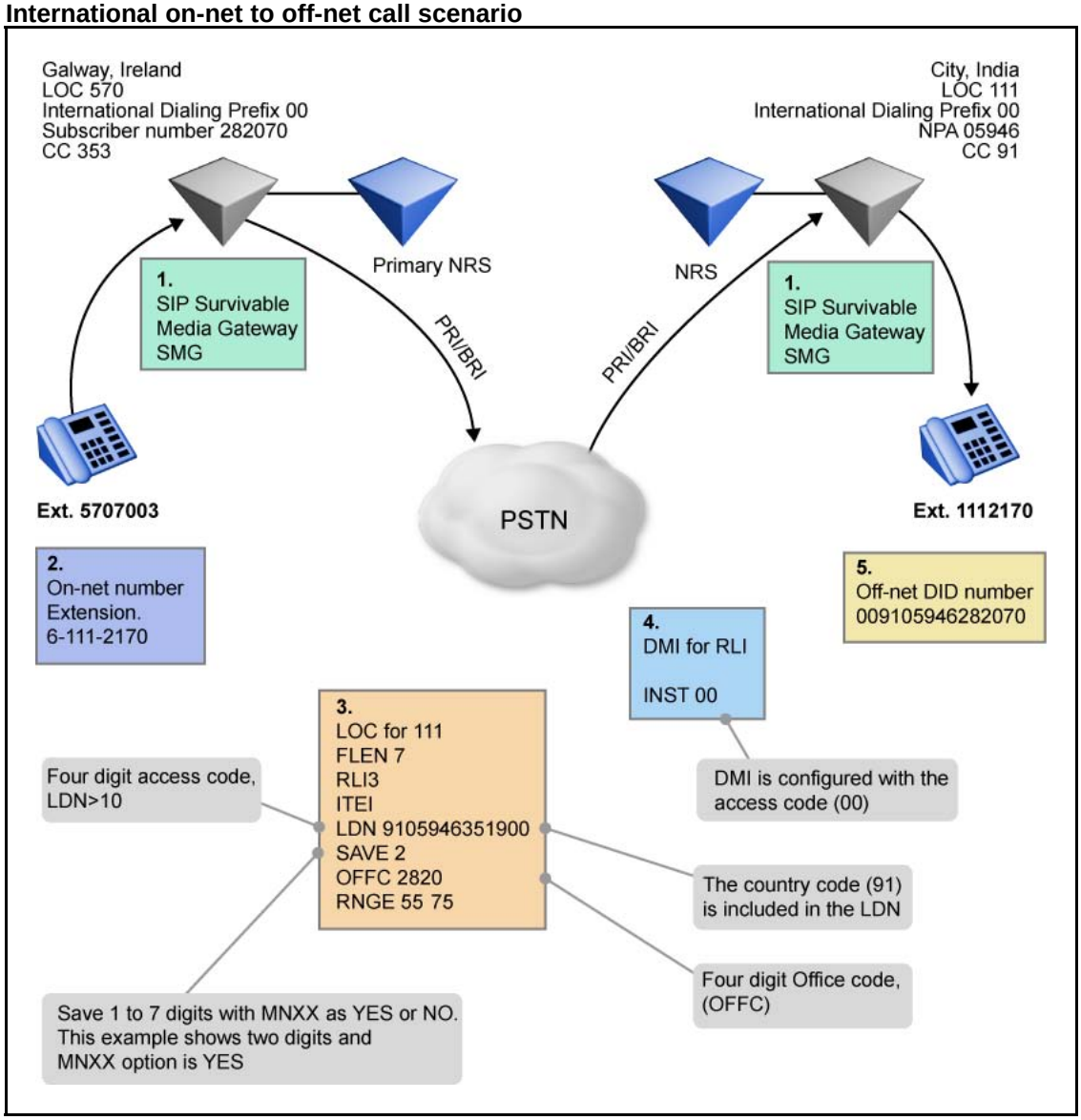

International call scenario

1. A SIP SMG in Ireland and a SIP SMG in India are in survivable mode due to all on-net facilities being busy or blocked. Conversion (CNV) is enabled in RLI for the India LOC 111.
2. The user in Galway, Ireland with LOC 570 dials the on-net number 6-111-2170.
3. The country code (91) is included as a prefix to the LDN.

Copyright © 2003-2010 Nortel Networks. All Rights Reserved.

4. The DMI is configured with the international dialing prefix (00).
5. NARS converts the dialed NARS UDP number (1112170) to the DID number of the destination location (009105946282070), and uses an off-net facility to complete the call.

Feature interactions

Country code–Nortel recommends configuring the LOC LDN to include the country code to help reduce some of the complexity. However, if the LDN is greater than 20-digits, the DMI can be used to insert the country code for routing a call to the off-net facility.

DID DNs–All DID Dialed Numbers (DN) within an LOC that overflow to the off-net facility must be the same digit length. Having the same digit length ensures the two far-end DID stations do not convert to the same off-net number.

Zone Based Dialing (ZBD)–If you are using ZBD, the character c can be included in the DMI to denote the international country code of the destination number. For ZBD scenarios, see *Dialing Plans Reference* (NN43001-283).

Flexible Numbering

Flexible numbering permits a private network to use up to ten digits for station numbers and up to seven digits for location codes. The total number of digits that need to be dialed can differ from station to station.

Flexible numbering cannot easily determine when digit dialing is complete. Call connection occurs immediately only if the number dialed has the maximum number of digits. Otherwise, the interdigit timer must expire before triggering call connection. To speed up connections to stations with short numbers, callers can press the Fast Connect key, the octothorpe (#), to force immediate call connection.

Flexible Numbering Plan (FNP)

Flexible Numbering Plan (FNP) accommodates Global Numbering Plan (GNP) requirements by modifying the Electronic Switched Network (ESN) dialing plan. The dialing plans are divided into two areas:

- **On-net dialing** — Involves all possible dialing situations required when dialing to a station located within the Local (private) Network.
- **Off-net dialing** — Involves all possible dialing situations required when dialing to a station that is not part of the Local Network (typically the Public Numbering Plan).

Copyright © 2003-2010 Nortel Networks. All Rights Reserved.

For further information about Flexible Numbering Plan refer to *Dialing Plans Reference (NN43001-283)*.

Dialing transparency

Extending network access to a system Main or conventional Main is accomplished by forming a single TIE Trunk access group from the Main to the Node. End users at Main switches access the trunk group to the Node by dialing the BARS or NARS on-net access code (AC1). The Node is arranged to insert the digit(s) for AC1 on each incoming call from the Main, thus enabling access to the network facilities of the Node in a transparent fashion. Local calling is arranged through Conventional dial "9" CO trunks at the Main.

Note: If a system Node replaces a tandem switch in a Tandem TIE Trunk Network (TTTN), other tandem switches in the network can "tandem through" the system Node using the same access codes as before. This requires that there are no conflicts between the access codes for the TTTN trunks and the dialing plan implemented at the system Node.

Automatic least-cost routing

For each network call translated at a system Node, BARS or NARS selects a route from a list of outgoing alternate routes to complete the call. A list of alternate routes to a particular destination is called a route list and each route specified in the list is termed an entry. Any combination of trunks, including Central Office (CO), Foreign Exchange (FX), and TIE, can be specified in a route list.

Note 1: The route list can contain up to 32 entries.

Note 2: Use of the Bandwidth Controller (DCA System 9000) improves the capacity of T1-based tandem networks. Its dynamic alternate routing capability can independently choose the optimum path for a voice or data call. However, it is necessary to coordinate the Bandwidth Controller routing lists with the ESN routing lists.

Typically, the first entries (routes) in a route list are the less expensive routes to a destination and comprise the initial set (I set) of routes in the list. The remaining routes in the list (if any) are the more expensive routes to a destination and comprise the extended set of routes in the list. An initial set marker, defined through service change, determines which routes comprise the initial route set. Refer to Electronic Switched Network Reference - Signaling and Transmission (NN43001-280) for more information about I set and extended set routes.

A system Node equipped with NARS supports 256 route lists (0-255). A Node equipped with BARS supports 128 route lists (0-127).

Copyright © 2003-2010 Nortel Networks. All Rights Reserved.

Each Route List entry has the following information defined:

- the route number
- the minimum Facility Restrictions Level (FRL) required for access
- the time of day the route can be accessed
- whether Off-Hook Queuing (OHQ) or Call Back Queuing (CBQ) is allowed on the route
- whether the route is to receive the Expensive Route Warning Tone (ERWT) treatment
- a digit manipulation table index number
- a Free Calling Area Screening (FCAS) table index number
- whether converting on-net numbers to off-net numbers is allowed (NARS)

Route eligibility

BARS or NARS translates the number dialed (1-11 digits) after an access code into a route list, and searches sequentially the routes in the list for an available route. Route eligibility for a given call is based on the caller's Network Class of Service (NCOS), the NCOS-defined FRL, the current time of day, and the originator's Class of Service (CLS).

Because each entry in a route list has a minimum FRL required for access and all network users are assigned an FRL through their NCOS, the network communications manager can restrict the type of calls allowed to particular end users. For example, if the minimum FRL for all calls is 1, except for special local services numbers that are assigned an FRL of 0, an end user assigned to an NCOS group with an FRL of 0 would only be able to make calls to the Special Numbers. In addition, the communications manager can restrict the use of high-cost facilities by assigning a high FRL to the expensive routes in a route list and a lower FRL to an end user's NCOS.

Digit manipulation

Any trunk type can be specified in a route list. However, when certain trunk types are accessed, the digits dialed by the end user must be manipulated to conform to the dialing requirements of the trunk. To do this, BARS or NARS uses digit manipulation tables to modify the dialed digits. There can be a maximum of 256 digit manipulation tables, each referenced by a Digit Manipulation Index number, defined at each system Node. Digit manipulation can delete up to 15 leading digits, and insert up to 24 leading digits.

Copyright © 2003-2010 Nortel Networks. All Rights Reserved.

An end user at customer location I (see Figure 1 "Example of a network with a typical NARS uniform dialing plan" (page 23)) dials 8-613-596-9084 to reach an off-net station in the 613 NPA associated with customer location H. At the system Node, BARS or NARS selects the appropriate route list for call completion to NPA 613 and finds that the only available route to that NPA is a local CO trunk that requires the insertion of the leading digit "1" for long distance calls. The route list entry for this route specifies a Digit Manipulation Index number (0-255). "0" means no digit manipulation is required. BARS or NARS refers to the digit manipulation table indicated by the index number, deletes digits as specified in the table (none in this case), inserts the required digits ("1" in this case), and completes the call on this route.

Time of day routing

BARS or NARS provides for up to eight Time of Day (TOD) schedules, numbered from 0 through 7. Each entry (route) in a route list is assigned to a TOD schedule that specifies the hour(s) during which the particular entry can be accessed. Thus, based on the current time of day, the most cost-effective route alternatives can be specified. A typical TOD schedule is shown in Table 4 "A typical TOD schedule" (page 32).

Based on the TOD schedule shown in Table 4 "A typical TOD schedule" (page 32), a route list entry assigned to TOD schedule 2 would be accessed only between the hours of 00:00 to 07:44 and 17:30 to 23:59. Access to the route at any other time would be denied. TOD schedules can be turned on or off through service change, as traffic conditions warrant. A TOD schedule is turned on for an entry by turning off all other TOD schedules. An X preceding the schedule number turns that number off. For example, for TOD schedule 2 to run, schedules 1 and 3 must be off.

Table 4
A typical TOD schedule

TOD schedule	Time period
2	00:00 to 07:44 17:30 to 23:59
1	07:45 to 08:59 12:00 to 13:14 16:00 to 17:29
0	09:00 to 11:59 13:15 to 15:59
Note 1: A TOD schedule can be associated with any number of arbitrarily selected 15-minute periods. However, any one 15-minute period can appear only in one TOD schedule.	

Copyright © 2003-2010 Nortel Networks. All Rights Reserved.

Note 2: Normally, the end user does not define 0, but lets the system define it by calculating times of day not mentioned in schedules 1-7.

Routing control

The Routing Control feature provides a mechanism for changing an end user's network-access capabilities when:

- a special TOD schedule is in effect
- an extended TOD is in effect
- the end user presses a Routing Control key on the console

Network Class of Service map (NMAP)

With the NARS or BARS feature, TOD schedule 7 is the special TOD schedule. Associated with the special TOD schedule is an NMAP. The NMAP lists all NCOS numbers. Associated with each listed NCOS is an alternate NCOS number (greater than, equal to, or smaller than) that replaces the original.

NCOS number when the special TOD schedule is in effect. Table 5 "A typical NCOS map for routing control" (page 33) illustrates a typical NCOS map.

Table 5
A typical NCOS map for routing control

Original NCOS	Alternate NCOS	Original NCOS	Alternate NCOS
0	0	8	2
1	0	9	3
2	0	10	3
3	1	11	4
4	1	12	4
5	2	13	5

Note: The alternate NCOS replaces the end user's original NCOS when routing control is in effect, due to TOD 7, Extended Time of Day, or when manually established at the console.

Copyright © 2003-2010 Nortel Networks. All Rights Reserved.

Table 5
A typical NCOS map for routing control (cont'd.)

Original NCOS	Alternate NCOS	Original NCOS	Alternate NCOS
6	2	14	5
7	2	15	5
Note: The alternate NCOS replaces the end user's original NCOS when routing control is in effect, due to TOD 7, Extended Time of Day, or when manually established at the console.			

Invoking routing control

The alternate NCOS numbers associated with special TOD schedule 7 are normally invoked when the time specified for TOD schedule 7 corresponds to the time in the system clock. Additionally, the alternate NCOS numbers can be scheduled for implementation (through service change) for the full 24-hour period of specified days of the week. This capability enables network-access capabilities to be changed automatically on weekends or company holidays.

The attendant can also manually invoke the Network Class of Service Map (NMAP) through use of a Routing Control (RTC) key on the console. Pressing the RTC key lights the associated lamp and invokes the NCOS MAP. To deactivate Routing Control, the RTC key must be pressed again. The associated lamp goes dark, the NMAP values are discarded and the original NCOS values are again in effect.

> ***Note:*** Authorization Code can be used to override the restrictions imposed through Routing Control. If an end user enters a valid Authorization Code (AUTH), the NCOS number associated with the AUTH is applied for the duration of the call. Routing Control is not affected.

Network Class of Service (NCOS)

NCOS is an integral part of the BARS and NARS features at a system Node, and of the Network Signaling feature at a system ESN Main.

NCOS provides the means to control:

- which trunk routes are eligible for attempted call completion
- whether queuing is offered to the call originator
- whether the call originator receives a warning tone when an expensive trunk is selected to complete a call
- whether the end user is allowed to access the Network Speed Call feature

Copyright © 2003-2010 Nortel Networks. All Rights Reserved.

After NCOS groups are defined through service change, each line, trunk, and attendant group is assigned to the NCOS group that best serves its requirements. The NCOS group to which each line, trunk, or attendant group is assigned is independent of the assigned class of service. TIE Trunks incoming from system mains or conventional mains are also assigned to an NCOS group (at the Node), which determines their level of access to the network facilities at the Node. See the *Features and Services (NN43001-506)* or the *Software Input Output Administration (NN43001-611)* for further information.

Table 6 "Summary of node and main parameters" (page 35) summarizes the NCOS and other parameters for system nodes and system mains.

Table 6
Summary of node and main parameters

Parameter (Note 4)	BARS Node	NARS Node	ESN Main
NCOS Groups	0–99	0–99	0–99
Facility Restriction Levels	0–7	0–7	0–7
Digit Manipulation Tables	1–255	1–255 [1–1999]	—
Route Lists	0–127	0–255 [0-1999]	—
Route List Entries	0–63	0–63	
FCAS Tables (Note 2)	1–127	1–255	—
SDR Tables (Note 2)	0–31	0–255	—
SDRR^{5+} Tables (Note 2)	0–255	0–511	—
TOD Schedules (Note 2)	0–7	0–7	—

Note 1: Values in brackets [ ] apply if the Flexible Numbering Plan (FNP) package (160) is equipped.

Note 2: FCAS = Free Calling Area Screening, SDR = Supplemental Digit Restriction, SDRR = Supplemental Digit Restriction/Recognition, TOD = Time-Of-Day

Note 3: If the NARS and BARS features are equipped in the same switch but for different customers, the highest parameter values apply to that switch. For example, if one customer has NARS and another customer has BARS, the NARS parameters apply to the BARS customer.

Note 4: If the New Flexible Code Restriction (NFCR) feature is equipped in conjunction with BARS or CDP, the number of available NCOSs is 100. NFCR is described in the *Features and Services (NN43001-506)* technical document.

Network control

Network Control is an enhancement to the NCOS feature that extends NCOS controls to end users located at a system Main. Network Control requires that the system Main and serving system Node be equipped with the Network Signaling (NSIG) feature. The system Main must also be equipped with the NCOS feature.

Copyright © 2003-2010 Nortel Networks. All Rights Reserved.

System Main NCOS

End users (lines, trunks, and attendants) at a system Main are assigned an NCOS that determines their level of access to network facilities at the serving system Node. When an end user at a system Main initiates a call to (or through) a system Node, the end user's assigned NCOS or Traveling Class of Service (TCOS), depending on TIE Trunk settings (ESN or ESN2, for example), can be transmitted.

Only NCOS 0 through 7 can be assigned at the Node if the end user's NCOS is transmitted to the serving Node and the Node is equipped with BARS. Therefore, only NCOS 0 through 7 must be assigned at the ESN Main. An ESN Main equipped with NSIG supports an NCOS of 0 through 99. If the Node is equipped with NARS, an NCOS of 0 through 99 can be assigned at both the Node and the ESN Main.

The transmitted NCOS or TCOS overrides the NCOS or FRL assigned to the incoming TIE Trunk group at the Node, and is used to determine the end user's eligibility for network resources/features at the system Node. Thus, an end user at a system Main has the same network-access capabilities as an end user at the system Node who is assigned the same NCOS.

> ***Note:*** If the end user at the system Main enters a valid Authorization Code prior to placing a BARS or NARS call, the NCOS associated with the Authorization Code is transmitted to the system Node in place of the end user's assigned NCOS.

Calls from a conventional Main to the system Node are controlled by the NCOS assigned to the incoming trunk group at the system Node, as the conventional Main has no NSIG.

System Node TCOS

Network Control at a system Node can provide a Travelling Class of Service (TCOS) mechanism. TCOS controls route access and Off-Hook Queuing (OHQ) eligibility for calls placed to (or through) another system Node or an associated system Main. It also enables the system Node to interface with switches that are part of an Electronic TIE Network (ETN) as long as the Signaling Arrangement (SIGO) setting on the TIE Trunk route is set for ETN at both ends. Nodes can send NCOS if SIGO is set for ESN2, (for example, at both ends of the TIE Trunk group).

The TCOS is, in effect, the Facility Restriction Level (FRL) of an end user's assigned NCOS. When an end user at a system Node initiates a call to another system Node (or a system ESN Main), the TCOS is transmitted to the other system Node. At the receiving system Node, the TCOS (0-7) replaces the FRL of the NCOS assigned to the incoming trunk group.

Copyright © 2003-2010 Nortel Networks. All Rights Reserved.

Route access and OHQ eligibility for the call are, therefore, based on the NCOS of the incoming trunk group with the modified FRL (for example, TCOS).

> ***Note:*** The Network Control (NCTL) data block (LD 87) is used to define OHQ eligibility on a FRL (TCOS) basis. For example, if FRL 4 is defined as OHQ eligible, then all end users with an NCOS with an FRL of 4 are eligible for OHQ on calls placed to another system Node or to an associated system Main.

If an end user at a system Main or conventional Main initiates a call that tandems through the serving system Node to another system Node or system Main, TCOS applies to the call as if the call originated at the serving system Node.

Compatibility with ETN switches

The system TCOS is equivalent to the Traveling Class Mark (TCM) used at ETN switches. (See Technical Publication 42709, "TIE Trunk Signaling Compatibility for Connecting to a DIMENSION PBX," July 1979.)

When a seven-digit/ten-digit UDP call or a Distant Steering Code (DSC) CDP call is made from a system Node to an ETN switch, the dialed digits together with the TCOS number (0-7) are sent to the connected ETN switch. At the ETN switch, the TCOS number received from the system Node is used as a TCM to determine route access and Off-Hook Queuing eligibility at the ETN switch.

Similarly, when a call is made from an ETN switch to a system Node, the dialed digits together with the TCM number (0-7) are sent to the connected system Node. The system Node interprets the received TCM number as a TCOS number. The received TCM (for example, TCOS) replaces the FRL of the NCOS assigned to the incoming trunk group from the ETN switch. This new FRL (for example, TCM) is then used to determine route access and Off-Hook Queuing eligibility for the call. However, if a DSC (CDP) call is terminated on a switch as a Local Steering Code (LSC) call, the TCOS value transmitted by the connected switch will not be collected and saved by this switch.

Facility Restriction Level (FRL)

An FRL number is associated with each NCOS group. The FRL ranges from 0 (low-privilege) to 7 (high-privilege). The FRL is used by the software to determine the Alternate Route Selection choices available for network call attempts by end users within an NCOS group.

An end user assigned to an NCOS with an FRL of 3 is allowed access to Alternate Route Selection choices that have an assigned FRL of 3 or less. Access to route choices with an FRL greater than 3 is denied. An end

Copyright © 2003-2010 Nortel Networks. All Rights Reserved.

user whose NCOS has an FRL of 7 has access to any Alternate Route Selection. By assigning low-privilege end users to an NCOS with a low FRL, and high-privilege end users to an NCOS with a higher FRL, the customer controls worker and management access to all network facilities.

Automatic on-net to off-net overflow

If all on-net facilities to a location are busy or blocked, NARS can convert a dialed NARS UDP number to the Listed Directory Number (LDN) or DID number of the destination location, and use off-net facilities to complete the call. This process is called conversion and this feature is activated on each route list entry where required.

After dialing AC1 + LOC, if an incomplete DN (or no DN at all) is dialed, LDB is out pulsed on routes with conversion (CNV) set to YES. This works because enough digits are dialed to determine the destination Node.

If the system Node is equipped with BARS, digit manipulation tables can be used to convert the dialed number to the off-net number (LDN or DID) of the destination location.

An end user at customer location I (see Figure 1 "Example of a network with a typical NARS uniform dialing plan" (page 23)) dials 8-777-3283 to reach a party with extension number 3283 at customer location H. At the Node, NARS directs the dialed LOC number (777) to a route list, and searches all eligible routes in the list. Failing to find an available TIE Trunk route, NARS then seizes local off-net facilities and, to complete the call, out pulses one of two possibilities:

- 224-3283, if customer location H is arranged for DID
- 224-5600, if customer location H is not arranged for DID

Multiple DID office code screening

Multiple DID Office Code Screening permits on-net calls that are routed through the public network using on-net to off-net conversion to terminate at any DN that is defined in the Location Code (LOC) memory data block. For each LOC defined, Multiple DID Office Code Screening allows the following:

- define multiple end office codes (NXX)
- define multiple ranges of DN within each NXX
- route calls to DID ranges with an NXX different from the LDN

The following arrangements of multiple office codes (NXX) and multiple DN ranges are possible:

Copyright © 2003-2010 Nortel Networks. All Rights Reserved.

- single office code with a single DN range
- single office code with multiple DN ranges
- multiple office codes with a single DN range
- multiple office codes with multiple DN ranges

Only one NPA for each LOC code is allowed.

Ranges defined within an LOC code must be unique. Overlapping or duplication of ranges is not permitted.

The number of digits in each DID range must be four.

A maximum of 20 DID ranges can be defined for each Location Code regardless of the number of office codes.

Incoming Trunk Group Exclusion (ITGE)

Incoming Trunk Group Exclusion (ITGE) stops end users on system and conventional mains from utilizing the network to reach destinations in the home NPA, or other restricted NPAs, NXXs, LOCs, and SPNs. When the feature is configured, end users cannot use the network to circumvent the restrictions. Instead, they are forced to dial off-net from their own switch and become subject to whatever restrictions are imposed at the Main.

Standard call blocking is applied on outgoing calls to specific NPAs, NXXs, SPNs or LOCs at the system Node if the call is from a specific incoming trunk group. Two advantages result:

- Loopback routing through the caller's home switch (home NPA, NXX) is prevented. Calls that must be made off-net from the caller's home switch are blocked outgoing at the Node.
- Main end users are prevented from using BARS or NARS to make calls to certain NPA, NXX, SPN or LOC that they are restricted from making at the home switch.

There is one ITGE index (255 groups) for each defined NPA, NXX, SPN or LOC. Each index points to an ITGE table. A maximum of 128 restricted routes can be defined in each ITGE table. Incoming Trunk Group Exclusion provides 10-digit restriction for NPA codes, 11-digit restriction for SPN codes, 7-digit restriction for NXX codes, and 3-digit restriction for LOC codes. For LOC codes, the entire code can be restricted as well.

When a call is received, BARS or NARS tests to see if the dialed code is a restricted type (Supplemental Digit Restriction). If it is, BARS or NARS checks whether or not it has an ITGE restriction and if there is an index number (ITEI) associated with it. If an ITEI is defined, the ITGE table

Copyright © 2003-2010 Nortel Networks. All Rights Reserved.

corresponding to the dialed code is searched. If the incoming trunk route is a member of the ITGE, the BARS or NARS process is terminated and the call is blocked. If Incoming Trunk Exclusion Digits (ITED) are assigned, BARS or NARS checks the ITED for a match with the dialed digits following the NPA, NXX, or SPN. If they match, and the ITGE includes the originating trunk route, the call is blocked.

Off-net number recognition

Off-Net Number Recognition eliminates the need for using two extra CO trunks when a subscriber using the private network dials a DID or DDD number that terminates at a BARS or NARS location. Calls are routed directly to the dialed DN (DID calls) or to the LDN (DDD calls), rather than being switched from the terminating switch to the CO and back again.

Off-Net Number Recognition parameters for local and remote DDD and DID locations are defined by the customer in the network translation tables, Supplemental Digit Recognition/Restriction (SDRR) blocks, Digit Manipulation Tables, and the Route Data Block. See Table 7 "SDRR" (page 40).

Up to 11 digits can be defined for recognition.

Table 7
SDRR

Call type	Network translation table (number of digits)	SDRR block (number of digits)
NPA	3 - 10	1 - (10 - N)
1NPA	4 - 11	1 - (11 - N)
NXX	3 - 7	1 - (7 - N)
1NXX	4 - 8	1 - (8 - N)
SPN	1 - 11	1 - (10 - N)
ISPN	1 - 4	1 - (11 - N)
Note: The value N is equal to the number of digits defined in the network translation table.		

Up to 512 SDRR blocks can be defined for NARS (256 for BARS). Each table can contain up to 64 entries.

Off-Net numbers are recognized at the last intelligent BARS or NARS switch. Translating the NPA, NXX, or SPN identifies the method of call treatment. If the data type is SDRR and the index is an SDRR table index, supplemental digit restriction/recognition is applied:

Copyright © 2003-2010 Nortel Networks. All Rights Reserved.

- If no match is found in the SDRR, route selection is called, call processing resumes, and the call is routed to the CO of the terminating off-net number.
- If a match is found **and** the number is in the denied block, standard call blocking takes place.
- If a match is found **and** the number is recognized as a terminating number at the local switch (for example, the last intelligent BARS or NARS switch), the call is terminated at the station DN (DID calls) or at the attendant DN (DDD calls).
- If a match is found, **and** the dialed number is a recognized number terminating at a remote switch, **and** the switch has chosen a TIE route for call termination, the switch checks the Route Data Block for special digit manipulation. The call is routed directly to the Main. DID calls terminate at the dialed station, and DDD calls terminate at the attendant DN.

  Note: Remote recognition applies to TIE Trunks only.

Supplemental Digit Restriction and Recognition (SDRR)

The Supplemental Digit Restriction and Recognition (SDDR) feature is modified to allow up to seven digits in the digit restriction table. (This is independent of the number of digits entered in response to the NPA, central office, or LOC service change prompts.)

Supplemental Digit Restriction blocks (see Table 8 "Supplemental digit restriction blocks for NARS or BARS" (page 42)) function as follows:

- Block (deny) access to certain telephone numbers.
- Recognize off-Net calls dialed to on-Net locations.
- Prevent routing of calls to the home switch of the originating trunk group by either on-net or off-net facilities.

Through system service change, the end user can specify the treatment received by blocked calls, such as Overflow Tone, Intercept to Attendant, or Recorded Announcement.

Copyright © 2003-2010 Nortel Networks. All Rights Reserved.

Table 8
Supplemental digit restriction blocks for NARS or BARS

Network package	Maximum
NARS	512
BARS	256
Note: One block can recognize or restrict up to 64 numbers.	

Digit translation/restriction/recognition

BARS and NARS provide a 1- through 10-digit translation/restriction/recognition capability through the use of network translation tables and Supplemental Restriction/Recognition tables. There are two network translation tables with NARS, one associated with each of the network access codes (AC1 and AC2). See Figure 4 "NARS elements accessed at a system node to process a network call" (page 44) for NARS elements accessed at a system Node to process a network call.

Information contained in the network translation tables is as follows:

- For each NPA entry, excluding the Home NPA (HNPA):
  - a route list index number (0-255 with NARS, 0-127 with BARS) that indicates which route list to use in processing a call to this NPA entry
  - whether there are telephone numbers within this NPA entry to which network calls are to be blocked; for example, denied
  - whether there are telephone numbers within this NPA entry to which network calls are to be blocked because of ITGE restrictions
  - whether there are numbers under this NPA entry that are to be recognized as DID or DDD codes to an On-Net location
  - a list (up to 64) of 1- to 7-digit numbers that follow the NPA and are to be blocked or recognized in this NPA
- For each NXX entry:
  - a route list index number (0-255 with NARS; 0-127 with BARS) that indicates which route list to access in processing a call to this NXX entry
  - whether there are telephone numbers within this NXX entry to which network calls are to be blocked
  - whether there are telephone numbers within this NXX entry to which network calls are to be blocked because of ITGE restrictions

Copyright © 2003-2010 Nortel Networks. All Rights Reserved.

— whether there are numbers under this NXX entry that are to be recognized as DID or DDD codes to an On-Net location

— a list of up to 64 one to four digit numbers that follow the NXX and are to be blocked or recognized in this NXX

- For each LOC entry, excluding the Home LOC code (not applicable to a BARS-equipped switch):

  — a route list index number (0-255) that indicates which route list to access in processing a call to this LOC entry

  — the Listed Directory Number (LDN) to which the LOC entry is to be converted when using off-net DDD facilities

  — the range of DID numbers to which the LOC entry can be converted when using DID facilities

  — office codes associated with the range

  — whether there are LOC entries to which network calls are to be blocked because of ITGE restrictions

- For each SPN entry:

  — a route list index number (0-255 with NARS; 0-127 with BARS) that indicates which route list to access in processing a call to this SPN

  — whether there are digits following SPN numbers to which network calls are to be blocked

  — whether there are SPN numbers for blocking network calls because of ITGE restrictions

  — whether there are numbers under this SPN that are to be recognized as DID or DDD codes to an On-Net location

  — a list of up to 64 one to ten digit numbers that are to be blocked or recognized when following the SPN

Copyright © 2003-2010 Nortel Networks. All Rights Reserved.

Figure 4
NARS elements accessed at a system node to process a network call

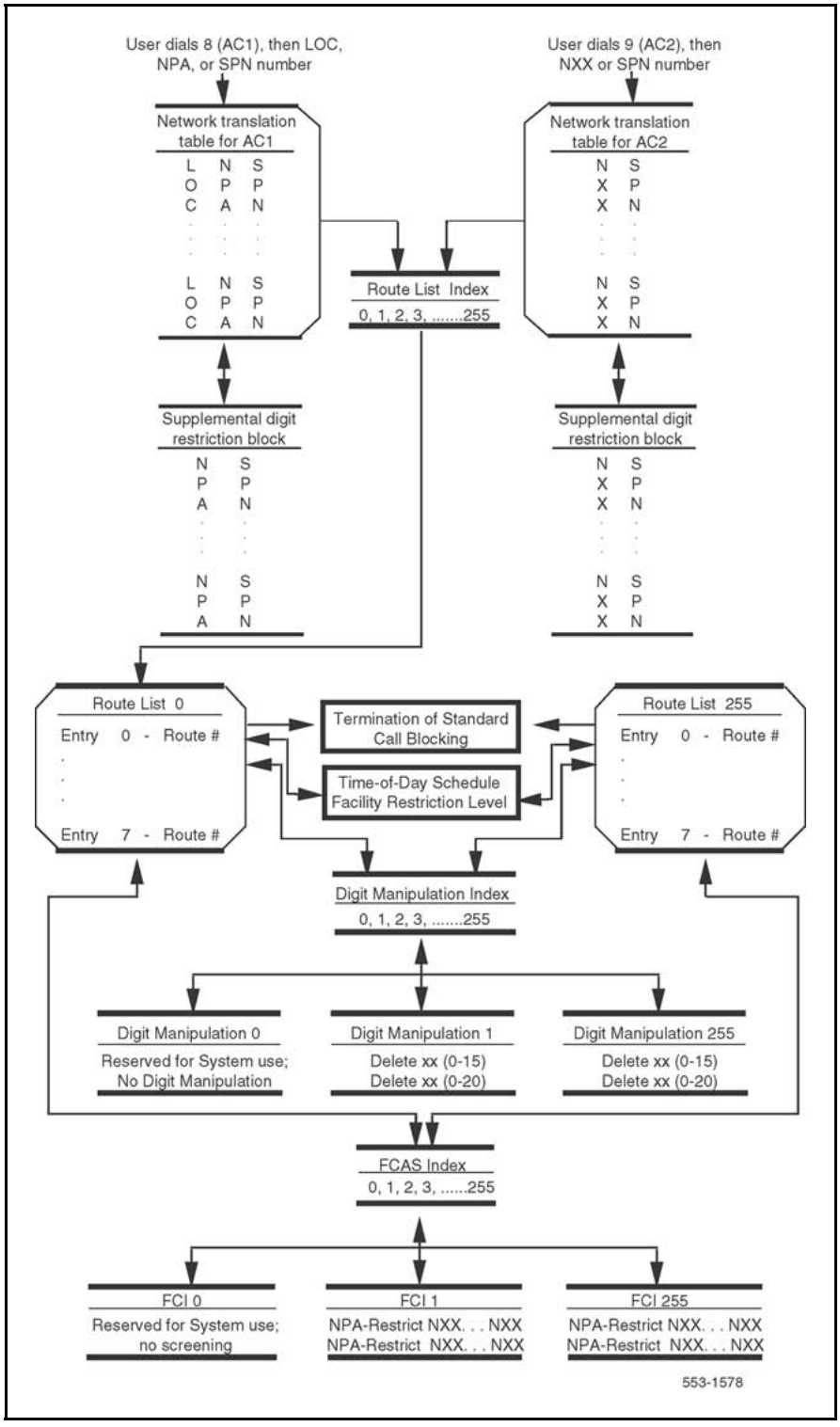

Copyright © 2003-2010 Nortel Networks. All Rights Reserved.

Free Calling Area Screening (FCAS)

FCAS is a BARS or NARS feature that provides full six-digit (NPA-NXX) screening to determine the route choice for completion of off-net calls. With FCAS, a customer can allow calls to NXX codes within the "free calling area" surrounding a particular on-net location and restrict (deny) calls to those NXX codes that would incur long distance charges.

FCAS is implemented similarly to digit manipulation (through tables). A system Node equipped with NARS can accommodate up to 255 FCAS tables; with BARS, up to 127 FCAS tables. Each table can contain up to 15 NPA codes.

Up to 800 NXX codes can be restricted or allowed within each NPA code. Each FCAS table is referenced by a Free Calling Index (FCI) number (0-255 with NARS, 0-127 with BARS); "FCI = 0" is a system default indicating that no Free Calling Area Screening is required. The appropriate FCI number is then assigned to the applicable route list entries.

Whenever a route list entry is being evaluated for an off-net call (for example, 8-NPA-NXX-XXXX), BARS or NARS checks to see if there is an FCI number (other than "0") referred to by the entry. If an FCI number other than "0" is defined, the appropriate FCAS table for the dialed NPA is found and used for NXX screening. If the dialed NXX is denied in the table, BARS or NARS will not use the route list entry for call completion, but will continue to search for another eligible route list entry. If the dialed NXX is not denied or specifically allowed in the table, the route list entry is eligible for the call. Calls to the LDN of a location are screened only if the NPA is included as part of the LDN. NXXs allowed in an FCI table are the only ones allowed for that route list entry.

BARS or NARS bypass control

A customer can allow selected end users to bypass the BARS or NARS feature for call completion between any two locations; for example, two locations that share a high community of interest. To do this, routes and trunks are set up between the two locations and are assigned an access code distinct from the AC1 and AC2 codes used to access BARS or NARS. The normal trunk controls, like Trunk Group Access Restriction (TGAR), Class of Service, and Code Restriction, are then used to enable access only to the selected end users. All other end users are denied access to the trunk group, and thus are forced to use BARS or NARS for all calls.

Copyright © 2003-2010 Nortel Networks. All Rights Reserved.

Network speed call

The Network Speed Call (NSC) feature enables an end user at a system Node who is normally restricted from making certain types of BARS or NARS calls to make such a call if the destination is a company-approved number defined in a System Speed Call (SSC) list. This feature requires that the System Speed Call feature (see the Features and Services (NN43001-506)be equipped, in addition to Network Speed Call. NSC can also be accessed by end users at a system Main or conventional Main, provided a BARS or NARS access code is used to initiate the call.

Access to the NSC feature is allowed after a NARS or BARS access code is dialed. Upon receipt of the BARS or NARS dial tone (optional), the end user dials a Network Speed Call access code (one to three digits). The NSC access code must be unique from all LOC, NPA and NXX codes and Special Numbers defined in the translator for the BARS or NARS access code.

The NSC access code is associated with a previously-defined System Speed Call list (0-4095) through service change in the network translation load. If the SSC list has its length (size) changed, the list access code and list number must be deleted and reentered into the NARS translator. Associated with the SSC list is an NCOS number. The NCOS assigned to the SSC list is applied to the call only if the FRL (0-7) is greater than that associated with the call originator's assigned NCOS.

> ***Note:*** The number of SSC lists is 4096 (0-4095), depending on available system memory and other speed call usage.

If 1+Dialing is specified for an NPA, NXX or SPN number in a translator, the digit 1 must not be used as the leading digit for Network Speed Call list codes in that translator.

The end user dials the number of the desired entry (0-1999) in the SSC list. Upon completion of dialing, the digits defined for the list entry are passed to BARS or NARS translation for processing. Route and feature (OHQ, CBQ) eligibility for call completion are based on the NCOS associated with the SSC list, if the FRL of the end user's assigned NCOS is lower than that of the list.

Network call transfer (NXFER)

This feature improves the operation of the existing Call Transfer (XFER) feature between two systems when a call is transferred back to the originating switch. The regular XFER feature requires two TIE Trunks to complete the call. With Network Call Transfer (NXFER), if the call is

Copyright © 2003-2010 Nortel Networks. All Rights Reserved.

transferred back to the originating switch by means of the same TIE Trunk group, the originating switch completes the transfer within itself and the TIE Trunks are dropped.

Note: Both system switches must be equipped with NSIG and NXFER software for this feature to operate.

The benefits derived from the NXFER feature, which operates the same as the XFER feature, include:

- minimal use of access TIE lines
- improved transmission performance because TIE lines are not used for the completed connection

Figure 5 "Connection without NXFER" (page 47) and Figure 7 "Connection after NXFER" (page 48) assume that station A receives an incoming trunk call from B and transfers it to C. As shown in Figure 5 "Connection without NXFER" (page 47), the NXFER feature allows station A at one ESN switch (I) to transfer the TIE Trunk call from station B (switch II) to a third party, station C (switch II). In addition to NXFER software, NSIG software is needed at both ends of the TIE Trunk. If the transfer is allowed, stations B and C are connected on switch II and the TIE Trunks are dropped (see Figure 5 "Connection without NXFER" (page 47)). In comparison, regular Call Transfer (XFER) requires two TIE Trunks and both switches to transfer and connect stations B and C.

Figure 5
Connection without NXFER

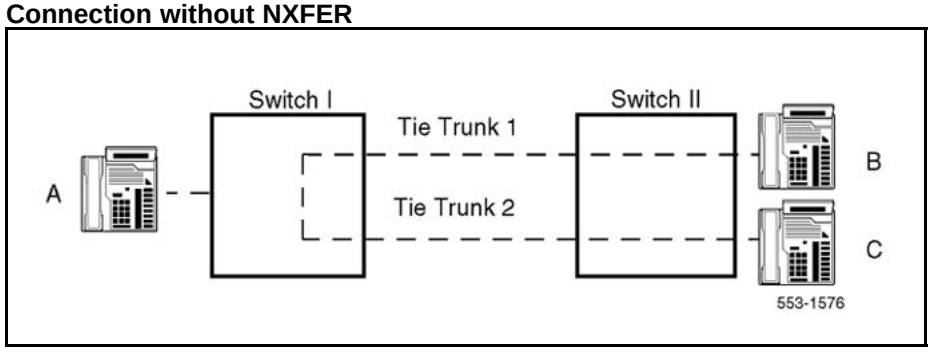

Copyright © 2003-2010 Nortel Networks. All Rights Reserved.

Figure 6
Connection during NXFER

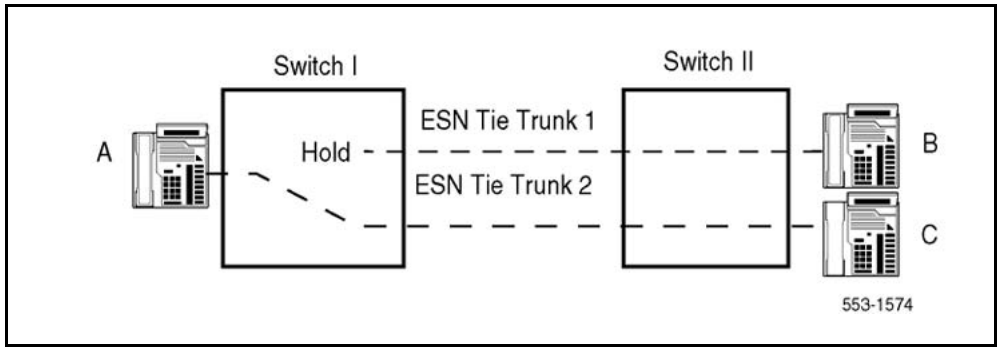

Figure 7
Connection after NXFER

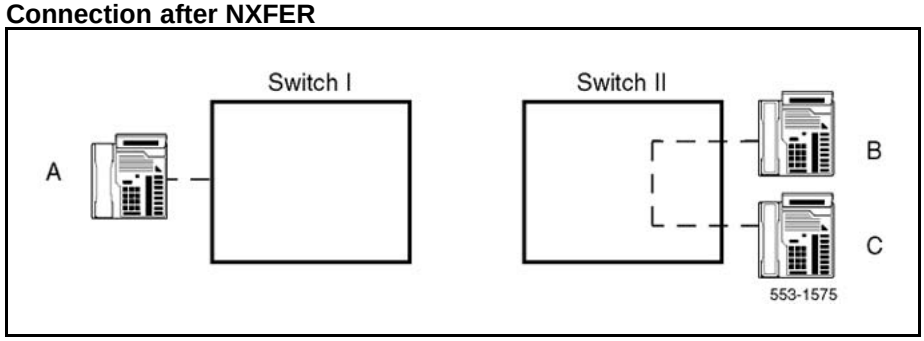

1+Dialing

Translation tables

With 1+Dialing, the BARS or NARS translation tables are equipped for 11-digit translation thus allowing BARS or NARS access codes for long distance calls. NARS provides two translation tables and BARS provides one. Refer to Table 2 "Dialing formats for NARS UDP calls" (page 24) for dialing formats for NARS UDP calls and Table 3 "Dialing formats for BARS calls" (page 25) for BARS calls.

Code ambiguity

The 1+Dialing capability also eliminates ambiguity between identical originating and terminating 3-digit NPA, NXX and LOC codes for BARS or NARS originated calls. Thus, the BARS or NARS customer can route calls to any NPA, NXX or LOC code that conflicts with one of its 3-digit codes.

Limitation

If 1+Dialing is specified for an NPA, NXX or SPN number in a translator, it cannot conflict with any NPA, NXX, or SPN in the same table.

Copyright © 2003-2010 Nortel Networks. All Rights Reserved.

Interchangeable Numbering Plan Area (NPA) codes impact

Due to the depletion of available NPA codes in North America, the Interchangeable NPA codes plan was developed. This plan modifies the North American Numbering Plan (NANP) by removing the limitation of zero (0) or one (1) being the second digit in the three digit NPA code. By allowing the second digit of area codes to be any number between zero (0) and nine (9), the available NPA codes are increased from 160 to 800; but due to the fact that eight NPA codes are reserved for special purposes, the actual increase is from 152 to 792.

Table 9 "NANP dialing formats with and without Interchangeable NPA codes" (page 49) shows the NANP dialing formats with and without Interchangeable NPA codes.

Table 9
NANP dialing formats with and without Interchangeable NPA codes

Dialing format with Interchangeable NPA codes	Call type
[0/1] + NXX + NXX + XXXX	10 digit public number (NPA)
[0/1] + NXX + XXXX	7 digit public number (NXX)
NXX + XXXX	7 digit private number (LOC)
Dialing format without Interchangeable NPA codes	**Call type**
[0/1] + NPX + NXX + XXXX	10 digit public number (NPA)
[0/1] + NXX + XXXX	7 digit public number (NXX)
NXX + XXXX	7 digit private number (LOC)

Legend:	
[0/1]	Optional digits: 0 indicates operator assisted call. 1 indicates Direct Distance Dial (DDD) call.
N	Digits 2 to 9.
P	Digits 0 or 1.
X	Digits 0 to 9.

HNPAs and NPAs using both NPX and NXX formats are allowed.

Due to the fact that the NPA codes now use the NXX format in North America, dialing plan conflicts are inevitable. Bellcore recommends the use of 1+Dialing. Under the recommended 1+Dialing method all ten digit calls are preceded by the digit "1" while no seven digit calls are preceded by the digit "1". Table 10 "Bellcore recommended 1+Dialing format" (page 50) shows the Bellcore recommended 1+Dialing format.

Copyright © 2003-2010 Nortel Networks. All Rights Reserved.

Table 10
Bellcore recommended 1+Dialing format

Dialing format	Call type
[0] + 1 + NXX + NXX + XXXX	10 digit public number (NPA)
[0] + NXX + XXXX	7 digit public number (NXX)
NXX + XXXX	7 digit private number (LOC)

Legend:	
[0]	Optional: indicates operator assisted call
1	Indicates 10 digit public number to follow (NPA).
N	Digits 2 to 9.
X	Digits 0 to 9.

For implementation information, see the section titled "1+Dialing for interchangeable NPA codes" (page 100).

System administrators must also be aware of the fact that the North American Toll Denied (TLD) class of service restriction will no longer bar all toll calls with Interchangeable NPA codes due to the fact that the TLD class of service restriction only checks to see if the second digit of an NPA is "0" or "1". Similarly, the North American toll Call Detail Recording (CDR) option will also cease to function accurately.

If toll calls are to be restricted with Interchangeable NPA codes, the system administrator must use either the Code Restriction or the New Flexible Code Restriction feature for calls that are not routed by BARS or NARS. BARS and NARS will still be able to reliably identify toll calls.

Network signaling (NSIG)

The NSIG feature provides the required signaling protocol to interface system nodes with system ESN mains, system nodes with other system nodes, system nodes with conventional mains, and system nodes with ETN switches.

When equipped with NSIG, a conventional Main is enhanced and becomes an ESN Main. When callers at an ESN Main place calls through a Node or Nodes with NSIG, the NCOS or TCOS travels with the call and is interpreted at other system switches that are equipped with NSIG. The TIE Trunk settings determine and control the operation of this feature.

When the NSIG feature is equipped at a switch, options are available in Route Data Block, LD 16, to define the signaling arrangements between that switch and any other switch that can be connected to it by means of TIE Trunks. These options define what call information is to be transmitted to a connected switch and what call information is to be received from a

Copyright © 2003-2010 Nortel Networks. All Rights Reserved.

connected switch. The option selected depends on the type of connected switch (Node, Main, Conventional Main, ETN) and the options (for example, CCBQ, CBQCM) that are available to the connected switch.

The signaling options are: standard (STD), ESN, ESN2, ESN3, ESN5, and ETN.

STD. Arranges the TIE Trunk group for transmission/reception of the called number between switches. Sends out pulsed digits.

ESN. Arranges the TIE Trunk group for transmission/reception of the call type, NCOS/TCOS, and called number between switches.

ESN2. Arranges the TIE Trunk group as described for ESN. Used unless switch has NXFER or Satellite Link Control (SLC).

ESN3. Arranges the TIE Trunk group as described for ESN; required on systems equipped with the NXFER or Satellite Link Control (SLC) features.

ESN5. Arranges the TIE Trunk group as described for ESN; needed with DTI.

ETN. Arranges the TIE Trunk group for transmission/reception of the called number and TCOS/TCM between switches, and is used when connected to an ETN switch. Sends outpulsed digits and TCOS.

Application

The following is a description of how these options accommodate the different switch types that can be connected to a system Main or system Node that is equipped with the NSIG feature.

System Node. A system Node can be connected by means of TIE Trunks to another system Node, a system Main, a conventional Main, and/or an ETN switch.

- If the system Node connects to another system Node, both ends of the connecting TIE Trunk group are defined with the ETN option (the called number plus TCOS/TCM), ESN2, ESN3, or ESN5.
- If the system Node connects to a system Main, both ends of the connecting TIE Trunk group are defined with the ESN option (call type plus NCOS/TCOS plus the called number).

Copyright © 2003-2010 Nortel Networks. All Rights Reserved.

- If the system Node connects to a conventional Main, the Node-end of the TIE Trunk group is defined with the STD option (the called number).
- If the system Node connects to an ETN switch, the Node-end of the TIE Trunk group is defined with the ETN option (the called number plus TCOS-TCM).

ESN Main. A system Main can be connected by means of TIE Trunks to a system Node and satellite switches.

For connection to a system Node, both ends of the connecting TIE Trunk group are defined with the ESN option (call type plus NCOS/TCOS plus the called number). If there are satellite switches connected to the system Main, the Main-end of the TIE Trunk groups from the satellite switches are defined with the STD option (the called number).

Requirements

The following requirements apply:

- As a system Main can connect to only one system Node, both switches must be equipped with the NSIG feature for NSIG-related features.
- TIE Trunks between system nodes and system mains must be arranged for DTMF sending/receiving and wink-start operation.
- System Node compatibility with ETN switches is limited to seven-digit on-network, 10-digit off-network, and DSC (CDP) calls.

Satellite Link Control (SLC)

Tandem trunk calls, when connected through more than one communications satellite trunk, are subject to transmission distortion because of propagation to and from communications satellites. The SLC feature ensures that the configuration of a call does not include more than one communications satellite trunk.

When accessing an SCC, the switch is instructed to look for one of the following tones:

- Busy or Overflow Tone
- SCC dial tone or regular dial tone
- Ringback tone

This feature applies to ESN network calls (BARS or NARS/CDP) only.

ESN Proprietary Signaling (NSIG) is required among ESN switches.

Copyright © 2003-2010 Nortel Networks. All Rights Reserved.

Routes that receive digits from satellites or send digits to satellites must be marked as SATELLITE routes for this feature to operate.

Simultaneously a timer is started whose value is an approximation of the period in which Ringback tone is normally received. When the timer expires prior to a response from the switch, the software sends a status request message to the switch. The response from the switch indicates that a tone is detected but not yet identified. Based on the sequence in which tones are checked, the software assumes the tone under investigation is Ringback tone and can continue the SCC call processing.

Flexible ESN 0 routing

Flexible ESN "0" Routing uses four prefixes:

- 0 - to call the local operator
- 00 - to call the international operator
- 011 - to make station to station international calls
- 01 - to use a calling card, call collect, or other operator-assisted international calls

Normally, the ESN translation table only contains leftwise unique numbers; for example, if one entry begins with the digits "123," no other entry can begin with the digits "123". These four special "0" prefixes, which are not leftwise unique, are an exception to this rule.

Flexible ESN "0" Routing is part of the existing BARS (57) and NARS (58) packages and interacts only with these features. Since NARS has two translation tables, two Flexible ESN "0" Routing data blocks are included in NARS. A call could be routed in two different ways.

Flexible ESN "0" Routing applies to all route types and network types that are supported by ESN. For information about the appropriate prompts and responses in service change (LD 90), refer to the *Software Input Output Administration (NN43001-611)*.

Federal Communication Commission Equal Access Carrier Access Code Expansion Impact

In May 1991, the Federal Communications Commission (FCC) mandated that Call Aggregators (CA) allow customers *Equal Access* to interexchange carriers. This allows callers to use interexchange carriers regardless of the CA's prescribed carrier. As a concession to CAs, the FCC has allowed the optional restriction of direct dialed Equal Access toll calls.

Copyright © 2003-2010 Nortel Networks. All Rights Reserved.

Any call preceded by a Carrier Access Code (CAC) is considered to be an Equal Access call. The CAC consists of an Equal Access identifier and a Carrier Identification Code (CIC) which identifies the desired interexchange carrier for a given call. The FCC Equal Access CAC Expansion allows the Equal Access identifier to be expanded from two to three digits, and the CIC to be expanded from three to four digits. Table 11 "CAC formats" (page 54) gives examples expanded CAC formats.

Table 11
CAC formats

CAC formats	Equal Access identifier	Carrier identification code
Original	10	XXX
Expanded	101	XXXX

The FCC Equal Access CAC Expansion feature also eliminates the Selective Carrier Restriction method capabilities while retaining the General Carrier Restriction capabilities. This results in a single restriction method, referred to as Equal Access toll call restriction.

Equal Access determines restrictions without looking at a call's originating type. (Equal Access is not a BARS/NARS feature and does not require BARS/NARS). To configure BARS/NARS to route Equal Access calls, simply use an SPN of 101 to identify the calls as Equal Access calls and route them accordingly.

Dialing plan considerations

The CAC formats and time frames that are supported are provided in Table 12 "CAC supported formats" (page 54). This table assists Network Dial Plan Administrators in planning for the CAC expansion. See Table 13 "CAC format interactions" (page 55) for the CAC format interactions.

Table 12
CAC supported formats

Operator-assisted dialing to North American and International locations:
101XXXX + 0
101XXXX + 0 + NPA + NXX + XXXX
101XXXX + 0 + NXX + XXXX
101XXXX + 0 + SAC + NXX + XXXX
101XXXX + 01 + CC + NN
Direct Distance Dial (DDD) dialing to North American and International locations:
101XXXX + 1 + NPA + NXX + XXXX
101XXXX + 1 + NXX + XXXX
101XXXX + 011 + CC + NN

Copyright © 2003-2010 Nortel Networks. All Rights Reserved.

When original and expanded CAC formats are supported it should be noted that the original CICs will be supported by the expanded CAC format if "0" is dialed before the original CIC. Table 13 "CAC format interactions" (page 55) shows the interactions between CAC formats during the various time frames.

Table 13
CAC format interactions

Supported CAC formats	Dialing sequences	Example
Original only	10XXX + ...	10123 + 1 + NPA + NXX + XXXX
Original and Expanded	10XXX + ... 1010XXX + ...	10123 + 1 + NPA + NXX + XXXX 1010123 + 1 + NPA + NXX + XXXX
Expanded only	1010XXX + ...	1010123 + 1 + NPA + NXX + XXXX

Carrier access code dialing sequences with special characters

The system recognizes two special characters in any dialing sequence. These characters are the * (star or asterisk) and # (number sign, pound, or octothorpe). The *, when detected in a dialing sequence, causes a pause in the out pulsing of digits, while the #, when detected in a dialing sequence, indicates end-of-dialing; that is, no further digits are required to process the call.

Due to an interaction with Equal Access, if the system is configured to restrict international toll calls, then direct dialed Equal Access operator calls (101XXXX + 0) cannot be terminated with an #. If the Equal Access operator call is terminated with an #, the call is restricted. Table 14 "Octothorpe with Equal Access interactions" (page 55) depicts this interaction

Table 14
Octothorpe with Equal Access interactions

If	101XXX + 011 + CC + NN	calls are restricted
Then	101XXX + 0 + #	calls will also be restricted
But	101XXX + 0	will not be restricted

Configuring Equal Access within a network

Equal Access toll restriction is intended for use on an outgoing route from a system to a Central Office. This feature is not intended for restriction of calls which terminate on a network Node. Therefore, network signaling (ESN3, ESN5, or ETN) is not supported.

Within a network Equal Access toll calls must be restricted at the outgoing Node (the Node which is directly connected to the Central Office). For implementation information, see “Equal Access” (page 104)

Copyright © 2003-2010 Nortel Networks. All Rights Reserved.

Network traffic measurements

The Network Traffic (NTRF) feature provides Traffic Measurement data related to network performance and network traffic at each system Node and system Main. Effective use of this data enables the network communications manager to assess the effectiveness of the network, and to identify specific areas of network operation where improvements are warranted.

Areas of network operation that are measured include Network Class of Service (NCOS), Off-Hook Queuing (OHQ), Call-Back Queuing (CBQ), and routing. These measurements are provided in addition to existing non-network traffic data in Traffic Measurement: Formats and Outputs Reference (NN43001-750).

TFN001 routing measurements

The routing measurements provide data related to route list utilization. A route list is a list of alternate trunk routes that are identified through interpretation of the dialed number. For each defined route list, these measurements show:

- how often the list was used
- which routes in the list were used
- the number of calls that were unsuccessful in completing a route list selection or connection
- queuing (OHQ and CBQ) information

This data comprises both the usage and the average duration of each call against the route list. Data is output only for route lists upon which calls were attempted during the traffic study interval.

Off-Hook Queuing (OHQ) measurements

The OHQ measurements are associated with route lists, NCOS, and incoming trunk groups. OHQ enables an end user to wait off-hook for a network facility to become available. The network communications manager can control the conditions for, and the duration of, the wait. The measurements present both the usage and the average duration of the OHQ feature. This data comprises part of the routing measurements.

Call Back Queuing (CBQ) measurements

The CBQ measurements are associated with route lists, NCOS, and incoming trunk groups. If the system cannot select a route, the caller can have the system establish the call at a later time when a route becomes available. The measurements indicate usage and the length of time a caller waits for an established call. The communications manager can control the conditions for CBQ and the advancement of a call within the queue. This data comprises part of the routing measurements.

Copyright © 2003-2010 Nortel Networks. All Rights Reserved.

TFN002 Network Class of Service (NCOS) measurements

The NCOS (assigned through service change) indicates the network facilities available to the end user. Traffic Measurements, for example, queuing and blocking delay, are accumulated for each NCOS and indicate the grade of service provided by the system. The communications manager can change the NCOS if a grade of service is inappropriate for an end user category, the definition of the NCOS is inaccurate, or the routing parameters need updating.

TFN003 incoming trunk group measurements

These measurements relate to the incremental traffic that was imposed on the incoming trunk groups by network queuing features (for example, OHQ, CBQ, Coordinated Call Back Queueing (CCBQ), Call Back Queueing for a Conventional Main (CBQCM).

The measurements show:

- how often the incoming trunk group was offered OHQ
- the average time in the OHQ
- how often the incoming trunk group was offered CCBQ or CBQCM, and the number of acceptances
- the average time in CCBQ or CBQCM
- how often an access line was blocked when attempting a CCBQ or CBQCM call back
- how often CCBQ or CBQCM call backs were not answered or were canceled

Expensive Route Warning Tone (ERWT)

In some cases, expensive trunk routes can be assigned an FRL that allows the routes to be accessed by certain network users. This feature enables the network communications manager to identify end users who should receive an ERWT. The tone (three 256-ms bursts of 440 Hz) notifies the end user that BARS or NARS has selected facilities designated as expensive to complete the call. The end user then has the choice of allowing the call to complete over the expensive facilities, going on-hook to avoid the increased expense, or queuing on the I set routes. The end user must make this choice within a programmable time of 0 to 10 seconds.

If the call originator is located at a system Node or system Main and the end user is eligible for both the Ring Again feature and for CBQ type A, then Ring Again can be activated to queue the call. Refer to section “Network queuing” (page 61) for more information.

Copyright © 2003-2010 Nortel Networks. All Rights Reserved.

If the system Node is equipped for CDR, acceptance of an expensive route after ERWT is received is noted in the CDR record.

ERWT eligibility is defined through the end user's assigned NCOS group. NCOS groups must have CBQ type A in order to hear ERWT. The tones must be activated for the customer group. The expensive route cannot be part of the I set in the route list. For more information about the ERT timer, refer to LD 86 in the *Software Input Output Administration (NN43001-611).*

Queuing features

Eligibility for the OHQ or CBQ features is defined through the end user's assigned NCOS group. Refer to section "Network queuing" (page 61) for more information.

Interchangeable Numbering Plan Area (NPA) codes

The Interchangeable NPA codes plan was developed in the 1960s to manage the inevitable depletion of available codes. Prior to 1995, all area codes had an N(0/1)X format, where N was any digit from 2 to 9 inclusive and X was any digit, 0 to 9. As of January 1995, area codes have an NXX format, increasing the available codes to 640.

Modifications to software, including changes to LDs that accept NPA or Home NPA codes, have eliminated dependencies and limitations associated with the old NPA code format.

The introduction of Interchangeable NPAs means that an area code (NPA) can appear identical to a central office prefix or a private network Location Code (LOC).

BARS/NARS prohibits the entry of identical NPAs, central office prefixes, or LOCs under the same ESN access code. Customers often have constructed translation tables with NPA and LOC codes associated with one Access Code and central office codes associated with a second Access Code. Now that LOC and NPA codes can be identical, this option is no longer feasible.

Table 15 "Access codes and 1+Dialing" (page 58) summarizes the options.

Table 15
Access codes and 1+Dialing

# of access codes	Need LOC?	Use 1+?	Results
2	yes	yes	no conflicts
2	yes	no	must ensure that no LOC is identical to any NPA

Copyright © 2003-2010 Nortel Networks. All Rights Reserved.

Table 15
Access codes and 1+Dialing (cont'd.)

# of access codes	Need LOC?	Use 1+?	Results
2	no	yes	no conflict
1	no	yes	no conflict
1	no	no	not recommended
1	yes	yes	not recommended

Nortel recommends a dialing plan that uses 1+Dialing to distinguish NPA calls. (Digit Manipulation can remove the "1" for customers whose central office does not support 1+Dialing.)

Customers with two Access Codes that do not want to use 1+Dialing must ensure that no LOCS in the database are identical to existing NPAs. (The database needs to be checked whenever a new NPA is introduced.)

Customers who do not need LOCs can use a single Access Code and 1+Dialing or two Access Codes, one for NPA and one for the central office prefix.

Software modifications enable end users to enter the new interchangeable NPAs in the following tables:

- Electronic Switched Networking (ESN) Translation tables, LD 90
- Free Calling Area Screening (FCAS) tables, LD 87
- Feature Group D (FGD) Code Restriction tables, LD 19
- M911 NPID tables, LD 16

Upgrades may require hardware modification depending on route selection capabilities, system type, and software release.

Refer to *Electronic Switched Network Reference - Signaling and Transmission (NN43001-280)* for more information.

Copyright © 2003-2010 Nortel Networks. All Rights Reserved.

Copyright © 2003-2010 Nortel Networks. All Rights Reserved.

Network queuing

Contents

This section contains information on the following topics:

"Overview" (page 61)

"Off-Hook queuing (OHQ)" (page 62)

"Call-Back Queuing (CBQ)" (page 65)

"Coordinated call-back queuing (CCBQ)" (page 68)

"Call-Back Queuing to Conventional Mains (CBQCM)" (page 71)

"Coordinated call-back queuing against Mains (CCBQAM)" (page 74)

Overview

The Network Queuing section includes detailed information about queuing features which provide customers with increased trunk group efficiency, facility cost-savings, and user convenience through the elimination of numerous redialing attempts.

The queuing features are as follows:

- Off-Hook Queuing (OHQ)
- Call-Back Queuing (CBQ)
- Coordinated Call-Back Queuing (CCBQ)
- Call-Back Queuing to Conventional Mains (CBQCM)
- Coordinated Call-Back Queuing to Against Mains (CBQCM)

Copyright © 2003-2010 Nortel Networks. All Rights Reserved.

Off-Hook queuing (OHQ)

Off-Hook Queuing (OHQ) is a software feature that can be equipped at a system Main. The feature enables a call originator to remain off-hook for a short time (this length of time is customer programmable) until a network facility for call completion becomes available at the Node or the Main.

Network calls can be placed in an OHQ mode if all trunk routes (entries) in the initial route set of a route list (see Note) are busy and the following criteria are met:

- At least one of the trunk routes in the initial route set of a route list is defined as being eligible for OHQ.
- The Network Class of Service (NCOS) of the call originator (at a Node or a Main) is defined to permit OHQ.
- The incoming trunk group at the Node or the Main is defined in software to permit OHQ for incoming calls.
- The Traveling Class Mark (TCM) received at the Node from an Electronic TIE Network (ETN) switch is compatible with a Facility Restriction Level (FRL) that is defined to permit OHQ.
- The Traveling Class of Service (TCOS) received at the Node from another Node is compatible with an FRL that is defined to permit OHQ.
- The probability that the call will time out in the OHQ before a trunk becomes available is below a specific threshold.
- The OHQ feature is enabled for the customer.

> ***Note:*** A system-defined initial set "marker" determines which route list entries are in the initial route set. Typically, the initial route set contains the cheaper routes to a particular destination. The remaining routes in the route list (if any) comprise the extended route set and are usually the more expensive routes to the destination. Only routes in the initial route set should be defined to allow OHQ. OHQ is not offered by routes in the extended route set even if they are defined to allow OHQ.

Calls that do not meet the preceding requirements for OHQ eligibility can be offered Call-Back Queuing (CBQ) at this point.

OHQ availability

The OHQ software performs an "availability" test to prevent calls from entering the OHQ when there is a high probability that the call will timeout before a trunk becomes available. The following criteria is used for this test:

- For each trunk route, a counter is maintained that reflects the current number of calls with the maximum queue priority of 3 queued against

Copyright © 2003-2010 Nortel Networks. All Rights Reserved.

it. This includes all calls in OHQ and the Call-Back Queuing (CBQ) and Ring Again (RGA) calls that are currently at priority 3.

- Each trunk route has a threshold value that indicates the maximum number of priority 3 calls that can be queued against it before OHQ time out becomes a high probability. Before a call is placed in the OHQ, the current queue count is compared with the threshold value for each eligible trunk route in the initial set of routes. If at least one of the trunk routes has a count less than or equal to the threshold value, the call can perform OHQ against all OHQ eligible routes.

OHQ offer

If all eligibility and availability checks are successful, the call originator is given a distinctive OHQoffer tone (a 1-second burst of 440 Hz tone) when the call enters the OHQ. The call originator either accepts the OHQ offer by remaining off-hook or declines the offer by going on-hook.

OHQ calls are placed in a priority-ordered queue with all other calls waiting for trunks. OHQ calls are assigned maximum priority (3) because other network facilities can be held while the call is queued. A timer with an initial value equal to the software-defined OHQ time limit is started to limit the duration of the OHQ. (The OHQ time limit is service changeable within the range of 2 to 60 seconds.)

The queue is examined when a trunk becomes idle in a trunk route on which one or more calls are queued. If a call is found that can be terminated on an idle trunk, the available trunk is seized and the call terminated.

If the OHQ timer expires before the call can be terminated, the call is removed from the OHQ. At this time, the remaining eligible routes in the route list (the extended set) are examined and the call is either terminated or given standard blocking treatment if no facilities are available. (CBQ will not be offered at this point, because OHQ was already offered.) Expensive Route Warning Tone (ERWT) is not given to calls that must be queued, even if terminated on expensive facilities.

OHQ can be offered to call originators located at a Node, Main, Conventional Main, or Electronic TIE Network (ETN) switch. Also, as a call progresses through the network, OHQ can be offered to the call originator from any of the Nodes or Mains that are used to process the call (that is, OHQ can be offered more than once for a given call).

Copyright © 2003-2010 Nortel Networks. All Rights Reserved.

OHQ traffic measurements

Traffic measurement data that is related to usage of the OHQ feature is accumulated at a Node or a Main that is equipped with the Network Traffic (NTRF) feature. Data for OHQ usage is available in *Traffic Measurement: Formats and Outputs Reference (NN43001-750)*.

Routing measurements (TFN001)

Routing measurements (TFN001) are available at a Node or a Main. They reflect on a route list basis the number of calls placed in the OHQ, the average time that a call waited in the OHQ, and the number of calls abandoned while in the OHQ.

Network Class of Service measurements (TFN002)

Network Class of Service (NCOS) measurements (TFN002) are available at a Node or a Main. They reflect on an NCOS basis the number of calls placed in the OHQ and the average time that a call waited in the OHQ.

Incoming trunk group measurements (TFN003)

Incoming trunk group measurements (TFN003) are available at a Node. (They are also available at a Main if the OHQ feature is equipped and some incoming trunk groups are defined as OHQ eligible.) These measurements reflect on an incoming-trunk or two-way trunk group basis the number of calls placed in the OHQ and the average time that a call waited in the OHQ.

OHQ interactions

The OHQ feature has the following interactions with existing system features.

Call modification

Station users cannot activate call modification features (Hold, Call Transfer, or Conference) while waiting in the OHQ. A switchhook flash that is used to activate features from 500/2500 sets is ignored. Similarly, the operation of digital telephone feature keys is ignored.

Camp-On, Call Waiting

If the attendant extends a call to a station that is in the OHQ, the Call Waiting tone is not offered to the station. If the attendant releases, the call is camped-on the OHQ station, but no warning tone is given. When the Camp-On call is recalled to the attendant console, the attendant can repeat the Camp-On procedure. Once the OHQ call is in an established state, the Camp-On tone is provided.

Copyright © 2003-2010 Nortel Networks. All Rights Reserved.

Attendant functions

OHQ interacts with the following Attendant features:

- The attendant cannot barge in during trunk seizure for OHQ calls.
- If the attendant extends a network call for a station user and the call is offered OHQ, the attendant must inform the caller of the OHQ offer before releasing from the call.
- The attendant cannot operate the release key or another loop key if the source call is in conference and the destination call is in the OHQ. Operation of the release destination key is permitted, however, and causes the OHQ call to be abandoned.

Call-Back Queuing (CBQ)

Call-Back Queuing (CBQ) is a Node feature that provides queuing for network calls that encounter busy or blocked facilities at the Node. CBQ enables the calling party to go on-hook after activation of the Ring Again (RGA) feature [see *Features and Services (NN43001-506)*] and receive a call-back from a Node when a network facility becomes available.

The CBQ feature is available only to stations located at a Node. Unlike OHQ, CBQ is offered only at the originating Node. Access to CBQ is accomplished through the existing RGA feature.

CBQ options

Two options for CBQ eligibility are defined by the call originator's Network Class of Service (NCOS):

- CBQ(i) — The CBQ can be offered after only the initial route set of a route list is examined for an available route.
- CBQ(a) — The CBQ can be offered after both the initial and extended (in other words, all) route sets of a route list are examined. In either case, a call that is offered CBQ is queued initially against only the initial route set.

CBQ eligibility

Before offering CBQ to a call originator, the following eligibility tests are performed:

- At least one of the routes in the initial route set is defined as CBQ eligible.
- The user's NCOS is defined as permitting CBQ — either CBQ(i) or CBQ(a).
- The call is not eligible for OHQ. Calls that are eligible for both OHQ and CBQ are offered OHQ.

Copyright © 2003-2010 Nortel Networks. All Rights Reserved.

- The user's telephone has access to the Ring Again (RGA) feature and does not have another CBQ or RGA call already in the queue.
- The CBQ feature is enabled for this customer.

CBQ(i) eligibility

For call originations by a caller defined as CBQ(i) eligible, the system searches the initial route set for an available route. If no available route is found, CBQ is offered to the caller, subject to the CBQ(a) eligibility tests.

CBQ(a) eligibility

For call originations by a caller defined as CBQ(a) eligible, the system examines the initial route set for an available route. If no available route is found, the extended route set is then searched for an available route. If an available route is not found in the extended set, then CBQ is offered, subject to the CBQ eligibility tests. However, if an available route in the extended route set is found that is designated as expensive, and the user's NCOS allows Expensive Route Warning Tone (ERWT), the tone is given and the system delays terminating the call. During this delay the user has the following options:

- Refusing the expensive route by abandoning the call.
- Waiting, and allowing the call to complete over the expensive route.
- Activating the RGA feature (by using the feature key or access code) to place the call in the CBQ. The user must be CBQ(a) eligible; otherwise, the operation of the RGA feature is ignored.

CBQ offer

The CBQ offer consists of an optional recorded announcement followed by an overflow tone. If the station user wants to accept the CBQ offer, the RGA must be activated within 30 seconds. RGA activation follows present feature operation for digital and 500/2500 sets, see *Features and Services (NN43001-506)*. The station user can refuse the CBQ offer by going on-hook. If the station user neither accepts nor refuses the CBQ offer within 30 seconds, the call is force-disconnected.

CBQ calls are placed in a priority-ordered trunk queue (together with OHQ calls, if any) with a starting priority and maximum priority defined by the call originator's NCOS. At the same time, two timers are started — a queue promotion timer and a route advance timer — each with values defined through the originator's NCOS. At intervals defined by the queue promotion timer, the priority of the call is incremented until it reaches its maximum priority. Each time the call priority is incremented, its position in the CBQ is advanced. If the route advance timer reaches its maximum

Copyright © 2003-2010 Nortel Networks. All Rights Reserved.

value before the call can be terminated on a route in the initial set, the extended set or route is added to the routes that the call is currently queued against.

Expensive Route Warning Tone (ERWT) is not given to calls that are in queue, even if terminated on expensive facilities. Unless canceled by the call originator, CBQ calls remain in the queue until they are offered a trunk; there is no time limit on CBQ calls.

CBQ callback

When a trunk becomes available for a CBQ call, it is seized to prevent incoming originations during the CBQ call-back period. The outpulsing of digits (either those originally dialed by the user or those required as a result of digit manipulation) is started at a slow, fixed rate. The number of digits that are outpulsed determines how long the trunk can be held while CBQ call-back is being offered to the originating station. The system computes this time by allowing 10 seconds before the first digit is outpulsed at 2.56 seconds between subsequent digits.

The originator of the call is alerted to the CBQ call-back either by the buzzing and winking tone of the RGA feature lamp or by short bursts of ringing (the 500/2500 set). The telephone user must accept the call-back within the computed value of outpulse time or the service-changeable CBQ time limit of 10 to 30 seconds, whichever is less. A user with a 500/2500 telephone must accept the call-back within 6 seconds. Acceptance of the CBQ call-back is performed with present RGA operating procedures. (When a CBQ call-back is answered at a digit display set, the original dialed digits are displayed.) If the user does not answer the call-back within the time limit, the call is removed from the queue and discarded. If the user accepts the call-back within the time limit, the call is terminated. A CBQ call can be canceled by the originating station by means of the existing procedures for RGA cancellation.

CBQ traffic measurements

Traffic measurement data related to the usage of the CBQ feature is accumulated at a Node or Main equipped with the Network Traffic (NTRF) feature. Data for CBQ usage is available in *Traffic Measurement: Formats and Outputs Reference (NN43001-750)*.

Routing measurements (TFN001)

Routing measurements (TFN001) are available at a Node or a Main. They reflect on a route-list basis the number of CBQ offers, the number of CBQ call-backs, the average time in the CBQ, and the number of CBQ cancellations.

Copyright © 2003-2010 Nortel Networks. All Rights Reserved.

Network Class of Service measurements (TFN002)

Network Class of Service measurements (TFN002) are available at a Node or a Main. They reflect on an NCOS-basis the number of CBQ calls and the average time in the CBQ.

CBQ interactions

The CBQ feature interacts with the following features.

Barge-In, Force Disconnect

Between the time that a trunk is seized for a CBQ call and the time that a user accepts the CBQ call-back, the trunk can be stolen by the attendant or force-disconnected through a service change. If this occurs, there is no guarantee that the call can be terminated when the user accepts the CBQ call-back. Under these circumstances, the call is treated like a new origination, and Network Alternate Route Selection/Basic Alternate Route Selection (NARS/BARS) is used to reattempt termination. This can result in the call being blocked and being offered CBQ a second time.

Hunting, Call Forward, multiple appearance DN

CBQ call-backs to stations at a Node are offered only to the originating station, regardless of the Hunting or Call Forward features in effect. Other appearances of a station's Directory Number (DN) are not offered the call-back.

Attendant functions

Because the RGA feature is not supported at attendant consoles, CBQ is not offered to an attendant, regardless of the CBQ eligibility of the NCOS assigned to the attendant.

Coordinated call-back queuing (CCBQ)

The Coordinated Call-Back Queuing (CCBQ) feature enables stations at a System Main to be offered CBQ when network calls are blocked at the serving System Node. When facilities become available at the Node, the call originator at the Main is alerted by a call-back from the Node. (This feature requires that the Main and the associated Node be equipped with the network signaling feature).

CCBQ eligibility

When a station at a Main originates a network call through a Node, the NCOS of the call originator, the call type, and whether the station has access to the RGA feature transmits to the Node. (If an authcode is entered at the Main prior to dialing a network call, the NCOS associated with the authcode is transmitted to the Node.) When received by the Node, this NCOS is used to determine Coordinated Call-Back Queuing (CCBQ) eligibility and is used for the duration of the call, unless further modified by the Authcode Conditionally Last feature on "Authorization code conditionally last" (page 150).

Copyright © 2003-2010 Nortel Networks. All Rights Reserved.

The CBQ eligibility tests are performed. In addition, a check is made to ensure that the incoming trunk group from the Main is defined (at the Node) to permit CBQ and that the type allows CBQ. CCBQ is offered to the user at the Main if the eligibility tests are successful. If the tests are unsuccessful, standard call blocking is applied to the call.

As for stations at a Node, the call originator at a Main can invoke RGA upon receipt of ERWT if the originator's NCOS is defined at the Main as CBQ(a) eligible.

CCBQ offer

The CCBQ offer and acceptance sequences are identical to those for stations at the Node (the SBQ offer). The optional recorded announcement and overflow tone are provided by the Node. The offer cannot be accepted until the recorded announcement is completed and the offer tone is started. In addition, after the recorded announcement is provided, the Node transmits a signal to the Main. This signal indicates that the call is in a state that allows RGA.

When the call originator at the Main activates RGA, the Main assigns a unique "queue identification" number to the call. This number is transmitted to the Node to indicate CCBQ acceptance. At the Main, the call is placed in a holding queue. At the Node, the call (together with the queue identification number) is placed into the trunk queue. The Main-to-Node TIE Trunk is released.

CCBQ call-back

When an outgoing trunk is seized by the Node for a CCBQ call, slow out pulsing is started to hold the trunk while a call-back is made to the call originator at the Main. The Node seizes an available TIE Trunk to the Main and transmits the "queue identification" number of the call to the Main. The Main then initiates a call-back to the call originator. Callback presentation to the call originator is the same as for standard RGA (a CBQ call-back).

> ***Note:*** If no TIE trunks to the Main are available, the outgoing trunk is released and can be offered another call. The CCBQ call retains its position in the queue but is not offered another trunk until a TIE Trunk to the Main becomes available.

When the call originator at the Main accepts the CCBQ call-back, answer supervision is sent from the Main to the Node. The Node then completes the call.

If the call originator is equipped with a analog (500/2500-type) telephone and is engaged in a call when the Node initiates a CCBQ call-back, a signal is transmitted from the Main to the Node. The Node releases the

Copyright © 2003-2010 Nortel Networks. All Rights Reserved.

outgoing trunk and places the CCBQ call into a holding queue for 5 min. No attempt is made to seize another outgoing trunk for the call until the holding time expires. This process occurs only once.

If the originating station is still busy after the holding time has expired, the CCBQ is canceled automatically at the Node. No indication of the CCBQ cancellation is given to the call originator.

To prevent the CCBQ call from remaining indefinitely in the holding queue at the Main, the Main sets a time limit of one hour for CCBQ calls. When this time limit expires, the CCBQ call is canceled automatically. (CCBQ call-back to a busy station is the same as for normal RGA).

The call originator at the Main can cancel the CCBQ call at any time. The Node is not aware of the cancellation until the CCBQ call-back is attempted.

CCBQ traffic measurements

Traffic measurement data that is related to usage of the CCBQ feature is accumulated at the Node. The data is reflected in the Incoming Trunk Group measurements (TFN003). The measurements reflect, on an incoming trunk-group basis, the number of CCBQ offers, the number of CCBQ offers that are accepted, the number of CCBQ call-backs that are not answered, and CCBQ cancellations. Refer to *Traffic Measurement: Formats and Outputs Reference (NN43001-750)*.

CCBQ interactions

The CCBQ feature interacts with the following system features.

Initialization

If the Main initializes while calls are queued at the Node, CCBQ call-backs from the Node are not answered because the initialization has cleared the holding queue at the Main. The Node treats these calls as call-back-no-answer calls and cancels the CCBQ automatically. If the Node initializes, CCBQ calls in the trunk queue are lost. The Main cannot detect this situation. To prevent calls from remaining indefinitely in the holding queue at the Main, the Main sets a time limit of one hour for CCBQ calls. If a call-back from the Node is not received within one hour, the Main cancels the CCBQ calls automatically.

Attendant functions

Attendants at a Main are not offered CCBQ. Attendant Barge-In on trunks involved in CCBQ operations results in cancellation of the CCBQ call.

Copyright © 2003-2010 Nortel Networks. All Rights Reserved.

Automatic Identification of Outward Dialing and Automatic Number Identification

Automatic Identification of Outward Dialing (AIOD) and Automatic Number Identification (ANI) facilities can be used to complete CCBQ calls from a Node. The outgoing toll call is billed to the access TIE Trunk rather than to the station at the Main.

Coordinated Dialing Plan

If CCBQ is offered to a Coordinated Dialing Plan (CDP) call as a result of trunk blocking at the Node, the optional recorded announcement is not given before the CCBQ offer tone.

Call Transfer and Conference

Stations at a Main can be offered CCBQ when initiating transfer or conference calls. CCBQ is not offered to analog (500/2500-type) stations performing these operations.

CCBQ limitations

A station at a Main has only 10 to 12 seconds to activate RGA after the CCBQ offer (or ERWT) rather than the 30 seconds allowed for stations at the Node. Accordingly, the time interval of the recorded announcement (if provided) must be properly engineered to ensure that the station at the Main has time to activate CCBQ when it is offered.

The time available to answer a CCBQ call-back at stations at a Main is two to three times less than the time available to stations at the Node, because of the time required for access-trunk seizure and signaling.

TIE trunk groups that are used to provide CCBQ to a Main cannot be arranged for loop-start dial-repeating signaling and cannot have joint far-end disconnect control, as these arrangements do not allow the call to be disconnected after a CCBQ call-back.

Tones and recorded announcements used for CCBQ to users at a Main are provided by the Node. Traffic loads imposed on these facilities at the Node must be considered when Nodes are being engineered.

Call-Back Queuing to Conventional Mains (CBQCM)

The Call-Back Queuing to Conventional Mains (CBQCM) feature enables call originators at a Conventional Main to access the CBQ feature at a Node.

Copyright © 2003-2010 Nortel Networks. All Rights Reserved.

CBQCM eligibility

When a station at a Conventional Main originates a network call through a Node, the NCOS assigned to the incoming trunk group is used to determine the CBQCM eligibility. This NCOS, as well as the incoming trunk group, must be defined as CBQ eligible.

> ***Note:*** If the call originates from an Electronic TIE Network (ETN) switch, the Traveling Class Mark (TCM) transmitted to the Node by the ETN switch must be compatible with a CBQ-eligible Facility Restriction Level (FRL) at the serving Node.

CBQCM offer

The CBQCM offer to a call originator at a Conventional Main consists of an optional recorded announcement, followed by a special (interrupted) dial tone. (The announcement and tones are provided from the Node.) To accept the CBQCM offer, the call originator dials the extension number associated with the telephone that is being used for the call. When the last digit of the extension number is dialed, a confirmation tone (three 256 millisecond bursts of dial tone) is sent from the Node to the call originator. The call is placed in the CBQ at the Node when the call originator goes on-hook.

The CBQCM offer can be refused by going on-hook any time before the last digit of the extension number is dialed or by remaining off-hook for longer than 30 seconds after receipt of the confirmation tone. If the CBQCM is neither accepted nor rejected within 30 seconds, the caller is given overflow tone (from the Node) and the call is disconnected.

CBQCM call-back

When an outgoing trunk becomes available at the Node, it is seized and slow outpulsing starts. The Node then seizes a TIE Trunk to the Conventional Main and outpulses the extension number of the call originator. The call originator must answer the call-back before slow outpulsing is completed; otherwise, the callback is canceled and the outgoing trunk is released.

> ***Note:*** If no TIE trunks are currently available to the Conventional Main, the Node releases the outgoing trunk. The CBQCM call retains its position in the queue but is not offered another outgoing trunk until a TIE Trunk to the Conventional Main becomes available.

When the call originator answers the CBQCM call-back, answer supervision must be transmitted from the Conventional Main to the Node. Upon receipt of answer supervision from the Conventional Main, the Node transmits a tone (three 256 millisecond bursts of dial tone) to notify the call originator that the call is a CBQCM call-back, and completes the call.

Copyright © 2003-2010 Nortel Networks. All Rights Reserved.

If the call originator's station is busy or the originator does not answer when the call-back is placed, the Node places the call in a suspended state for five minutes. After five minutes, another call-back is attempted if the outgoing trunk is free. If the station that originated the call is still busy or does not answer, the Node cancels the call.

No provision is made for CBQCM cancellation by a call originator at a Conventional Main. Once the CBQCM offer is accepted, the call remains in the queue until the Node initiates a call-back.

CBQCM traffic measurements

Traffic measurement data that is related to usage of the CBQCM feature is accumulated at the Node. This data then becomes part of the Incoming Trunk Group Measurements (TFN003). The data reflects on an incoming trunk group basis the number of the CBQCM offers and acceptances, the average time in CBQCM, the number of blocked CBQCM call-backs, and the number of CBQCM call-backs not answered.

CBQCM limitations

Station users at Conventional Mains cannot activate RGA to refuse expensive routes after the ERWT is given.

The Node seizes the same TIE Trunk group that was used to initiate the CBQCM for the CBQCM call-back. Thus, these trunk groups must be two-way (incoming/outgoing).

Conventional Mains must provide answer supervision on TIE trunks connected to the Node. These switches must also permit transmission or repetition of station dial pulses for CBQCM operation. This feature cannot be used with systems that operate in senderized mode. Operation can require adjustment of the interdigit time out on systems that use simulated cut-through operation.

Conventional Mains must not allow CBQCM call-back calls to be modified by Call Transfer or Call Forward. Such call modification can result in the TIE line not being released upon call completion.

The station user at a Conventional Main must dial the internal DN of his or her station to accept a CBQCM offering, rather than the CDPDN, if the Node is equipped for the Coordinated Dialing Plan.

TIE trunk groups that are used to provide CBQCM to a Conventional Main cannot be arranged for loop-start dial-repeating signaling and cannot have joint far-end disconnect control, as these arrangements do not allow the call to be disconnected after a CBQCM call-back.

Copyright © 2003-2010 Nortel Networks. All Rights Reserved.

Because tones and recorded announcements for CBQCM are provided by the Node, traffic loads on these facilities at the Node must be considered when Nodes are being engineered.

Coordinated call-back queuing against Mains (CCBQAM)

The Coordinated Call-Back Queuing Against Mains (CCBQAM) feature enables stations at Nodes to be offered CBQ for network calls that are blocked at a Main. When facilities become available at the Main, the call originator at the Node is alerted by a call-back from the Main. The CCBQAM otherwise functions identically to CCBQ at the Node.

Copyright © 2003-2010 Nortel Networks. All Rights Reserved.

Implementation

Contents

This section contains information on the following topics:

"Overview" (page 75)

"BARS" (page 75)

"NARS" (page 87)

"1+Dialing for interchangeable NPA codes" (page 100)

"Equal Access" (page 104)

Overview

This section provides the tasks necessary to configure Basic Alternate Route Selection (BARS), Network Alternate Route Selection (NARS), 1+Dialing plan, and Equal Access. Only the service change information shown here. For a complete discussion of prompts and responses, refer to the *Software Input Output Administration (NN43001-611)*.

BARS

Task summary list

The following is a summary of the tasks in this section:

1. Table 16 "LD 87: Enter data for each Network Class of Service (NCOS) group" (page 76)
2. Table 17 "LD 86: Enter data to define BARS feature parameters" (page 76)
3. Table 18 "LD 86: Enter data for each Digit Manipulation Index (DMI)" (page 77)
4. Table 19 "LD 87: Enter data for each Free Calling Area Screening (FCAS)" (page 77)
5. Table 20 "LD 86: Enter data for each route list associated with a DMI" (page 78)

Copyright © 2003-2010 Nortel Networks. All Rights Reserved.

6. Table 21 "LD 86: Enter data for each Incoming Trunk Group Exclusion (ITGE) index" (page 79)
7. Table 22 "LD 90: Enter BARS translation data" (page 79)
8. Table 23 "LD 16: Enter data to configure a conventional main for off-net number recognition" (page 86)
9. “Enter data to assign a NCOS group number to a list of items” (page 87).
10. “Back up the database” (page 87).

Table 16
LD 87: Enter data for each Network Class of Service (NCOS) group

Prompt	Response	Description
REQ	NEW CHG OUT	Create, change, or remove data.
CUST	xx	Customer number as defined in LD 15.
FEAT	NCTL	Feature = Network Control.
NCOS	(0)-99	NCOS group number to be added, changed, or removed.
- FRL	(0)-7	Facility Restriction Level (FRL). Your entry determines the entries in a Route List Index (RLI) to which it has access. 0 is the most restrictive, 7 is the least restrictive and can access more entries. FRL is assigned to each NCOS.
- RWTA	(NO) YES	Allow Expensive Route Warning Tone (ERWT).

Table 17
LD 86: Enter data to define BARS feature parameters

Prompt	Response	Description
REQ	NEW CHG OUT	Create, change, or remove data.
CUST	xx	Customer number as defined in LD 15.
FEAT	ESN	Feature = Electronic Switched Network (ESN).
MXSD	0-1500	Maximum number of Supplemental Digit restriction blocks.
MXIX	0-127	Maximum number of incoming trunk group exclusion tables that can be defined. Enter 0 if not required.
MXDM	0-xxxx	Maximum number of digit manipulation tables, where xxxx = 0-256 if Flexible Numbering Plan (FNP) package 160 is not equipped; 0-2000 if FNP package 160 is equipped.
MXFC	0-127	Maximum number of free calling area screening tables.
MXRL	0-128	Maximum number of route lists. If MXRL = 0, the system will not allow the creation of any route lists.
AC1	xx	One or two digit BARS access code one.
DLTN	(YES) NO	Dial tone after dialing AC1 or AC2.

Copyright © 2003-2010 Nortel Networks. All Rights Reserved.

Table 17
LD 86: Enter data to define BARS feature parameters (cont'd.)

Prompt	Response	Description
ERWT	(YES) NO	Is Expensive Route Warning Tone (ERWT) provided? ERWT is not supported on TIE Trunks.
ERDT	0-(6)-10	Time in seconds that an end user has to accept or reject an expensive route after ERWT is given; default is 6 seconds; range is in 2-second intervals.
TODS	x hh mm hh mm	Start and end time-of-day schedules. Where: x = schedule number for BARS = 0-7, hh = hour, mm = minutes.
TGAR	(NO) YES	Trunk Group Access Restrictions (TGAR). YES = Examine TGAR/TARG when call is placed NO = Ignore TGAR/TARG when call is placed.

Table 18
LD 86: Enter data for each Digit Manipulation Index (DMI)

Prompt	Response	Description
REQ	NEW CHG OUT	Create, change, or remove data.
CUST	xx	Customer number as defined in LD 15.
FEAT	DGT	Feature = Digit Manipulation Index (DMI).
DMI	1-xxxx	Digit manipulation table index, xxxx = 0-255 if FNP package 160 is not equipped; 0-2000 if FNP package 160 is equipped. The maximum number of digit manipulation tables is defined by prompt MXDM.
DEL	(0)-19	Number of leading digits to be deleted from the dialed number; the default is 0.
INST	x...x	Up to 31 leading digits to be inserted.

Table 19
LD 87: Enter data for each Free Calling Area Screening (FCAS)

Prompt	Response	Description
REQ	NEW CHG PRT	Action request.
CUST	xx	Customer number as defined in LD 15.
FEAT	FCAS	Feature = Free Calling Area Screening (FCAS).
FCI	1-127	Free calling area screening table index number.
NPA		Numbering Plan Area (NPA) code translation. BARS allows up to 15 NPA codes per table with a maximum of 800 NXX codes each.
	xxx	NPA code translation, where xxx = 200-999. The first digit must be 2-9; the second and third digits can be 0-9. Omit the "1" if using1+NPA format.

Copyright © 2003-2010 Nortel Networks. All Rights Reserved.

Table 19
LD 87: Enter data for each Free Calling Area Screening (FCAS) (cont'd.)

Prompt	Response	Description
	xxx y..y z..z	Extended NPA code translation, where xxx = 3 digits, y..y = 1-3 digits and z..z = 1-4 digits. Separate xxx, y..y and z..z entries with a space. Omit the "1" if using 1+NPA format.
NXX	aaaa	Allow or deny NXX codes for NPA, where aaaa = DENY or ALOW.
DENY	xxx xxx	NXX code or range of codes to be denied.
ALOW	xxxx xxxx	NXX code or range of codes to be allowed.

Table 20
LD 86: Enter data for each route list associated with a DMI

Prompt	Response	Description
REQ	NEW CHG OUT	Create, change, or remove data.
CUST	xx	Customer number as defined in LD 15.
FEAT	RLB	Feature = Route List Data block.
RLI	0-127	Route list index number.
ENTR	0-63	Route list entry number.
ROUT	0-511	Route number associated with the index. Range for Large System and CS 1000E system.
	0-127	Range for Meridian 1 Small System, Media Gateway 1000B, and Media Gateway 1000T.
TDET	(NO) YES	Is Tone detector used?
TYPE	aaa	Type of tone detector application, where aaa can be: (CC1) = Tone detector for Special Common Carrier Type 1 TIE = Tone detector for on-net calls CC2 = Tone detector for Special Common Carrier Type 2
TONE	a..a	Type of tone expected from Special Common Carrier, where a..a can be: DIAL = normal dial tone (SCC) = SCC dial tone
TOD	0-7	Time-of-Day schedule associated with the entry; precede entry with X to turn off a time-of-day schedule.
EXP	(NO) YES	Entry is (is not) classed as expensive.
FRL	(0)-7	Minimum Facility Restriction Level an end user must have to access the entry.

Copyright © 2003-2010 Nortel Networks. All Rights Reserved.

Table 20
LD 86: Enter data for each route list associated with a DMI (cont'd.)

Prompt	Response	Description
DMI	1-xxxx	Digit manipulation table index, xxxx = 0-255 if FNP package 160 is not equipped; 0-2000 if FNP package 160 is equipped. The maximum number of Digit manipulation tables is defined by prompt MXDM.
FCI	(0)-255	FCAS table index number (0) = no FCAS required
OHQ	(NO) YES	Off-Hook Queuing is (is not) allowed on the entry.
CBQ	(NO) YES	Call Back Queuing is (is not) allowed on the entry.
ISET	(0)-64	Number of entries in the Initial route Set.
MFRL	(MIN), 0-7	Minimum Facility Restriction Level (MFRL), where: 0-7 = the minimum FRL used to determine autocode prompting; (MIN) = default minimum FRL value.

Table 21
LD 86: Enter data for each Incoming Trunk Group Exclusion (ITGE) index

Prompt	Response	Description
REQ	NEW CHG OUT	Create, change, or remove data.
CUST	xx	Customer number as defined in LD 15.
FEAT	ITGE	Feature = Incoming Trunk Group Exclusion (ITGE) data block.
ITEI	1-127	Incoming trunk group exclusion index number; if REQ was "OUT" all route entries defined for the entered index are removed.
	<return>	Return to REQ prompt.
RTNO		Route number associated with index; precede with an X to delete an existing route.
	0-511 0-127	For Large Systems For Small Systems
	<return>	Return to REQ prompt.

Table 22
LD 90: Enter BARS translation data

Prompt	Response	Description
REQ	NEW CHG OUT	Create, change, or remove data.
CUST	xx	Customer number as defined in LD 15.
FEAT	NET	Feature = Network Translation Tables

Copyright © 2003-2010 Nortel Networks. All Rights Reserved.

Table 22
LD 90: Enter BARS translation data (cont'd.)

Prompt	Response	Description
TRAN	aaa	Translator, where aaa can be: AC1 = Access Code 1 SUM = Summary of Network Translators
TYPE	a...a	Type of data block, where a...a can be: HNPA = Home NPA translation code (to be used on DPNSS1) NPA = Numbering plan area translation code (should NOT be used on DPNSS1) NXX = Central Office code translation SPN = Special code translation NSCL = Network Speed Call List
	<return>	Return to REQ.
The following prompt appears if TYPE is HNPA:		
HNPA		Home Numbering Plan Area code.
	xxx	Response for Home Numbering Plan Area (HNPA) code, where xxx = 200-999. A leading zero is not allowed.
	1xxx	Response for HNPA code using 1+Dialing, where xxx = 200-999. Note that the xxx entry must be preceded with the character "1".
The following prompts appear if TYPE is NPA:		
NPA		NPA code translation.
	xxx	NPA code translation, where xxx = 3 digits. A leading zero is not allowed.
	xxx y..y z..z	Extended NPA code translation. An extended NPA code can be from 4 to 10 digits, where xxx = 3 digits, y..y = 1-3 digits and z..z = 1-4 digits. Separate xxx, y..y and z..z entries with a space.
	1xxx	NPA code translation using 1+Dialing, where xxx = 3 digits. Note that the xxx entry must be preceded with the character "1".
	1xxx y..y z..z	Extended NPA code translation using 1+Dialing. An extended NPA code using 1+Dialing can be from 5 to 11 digits, where xxx = 3 digits, y..y = 1-3 digits and z..z = 1-4 digits. Separate xxx, y..y and z..z entries with a space. Note that the xxx entry must be preceded with the character "1".
RLI	0-127	Route list index.

Copyright © 2003-2010 Nortel Networks. All Rights Reserved.

Table 22
LD 90: Enter BARS translation data (cont'd.)

Prompt	Response	Description
SDRR	a..a	Type of supplemental restriction or recognition, where a..a can be: ALOW = Allowed codes ARRN = Alternate Routing Remote Number DDD = Recognized remote Direct Distance Dial codes DENY = Restricted codes DID = Recognized remote Direct Inward Dial codes ITED = Incoming Trunk group Exclusion Digits LDDD = Recognized Local Direct Distance Dial codes LDID = Recognized Local Direct Inward Dial codes STRK = ADM/MDM trunk groups
SDRR	aaa	Type of supplemental restriction or recognition. See prompt above for response options.
DMI	1-255	Digit manipulation table index.
DENY	x...x	Number to be denied within the NPA or Supplemental Digit Restriction/Recognition (SDRR). The maximum number of digits to be entered must be the lesser of 10 or 10-m (11-m for 1+Dialing1+Dialing), where: m = number of digits entered for NPA. This number does not have to be leftwise unique. For non leftwise unique numbers, the longer number takes precedence over the shorter number. However, the exact same numbers (not leftwise unique and the same length) are still blocked.
- LDID	x...x	Local DID number recognized within the NPA. The maximum number of digits to be entered must be the lesser of 10 or 10-m (11-m for 1+Dialing), where: m = number of digits entered for NPA. This number does not have to be leftwise unique. For non leftwise unique numbers, the longer number takes precedence over the shorter number. However, the exact same numbers (not leftwise unique and the same length) are still blocked.

Copyright © 2003-2010 Nortel Networks. All Rights Reserved.

Table 22
LD 90: Enter BARS translation data (cont'd.)

Prompt	Response	Description
- LDDD	x...x	Local DDD number recognized within the NPA. The maximum number of digits to be entered must be the lesser of 10 or 10-m (11-m for 1+Dialing), where: m = number of digits entered for NPA. This number does not have to be leftwise unique. For non leftwise unique numbers, the longer number takes precedence over the shorter number. However, the exact same numbers (not leftwise unique and the same length) are still blocked.
- DID	x...x	Remote DID number recognized within the NPA. The maximum number of digits to be entered must be the lesser of 10 or 10-m (11-m for 1+Dialing), where: m = number of digits entered for NPA. This number does not have to be leftwise unique. For non leftwise unique numbers, the longer number takes precedence over the shorter number. However, the exact same numbers (not leftwise unique and the same length) are still blocked.
- DDD	x...x	Remote DDD number recognized within the NPA. The maximum number of digits to be entered must be the lesser of 10 or 10-m (11-m for 1+Dialing), where: m = number of digits entered for NPA. This number does not have to be leftwise unique. For non leftwise unique numbers, the longer number takes precedence over the shorter number. However, the exact same numbers (not leftwise unique and the same length) are still blocked.
- ITED	x...x	Incoming trunk group exclusion codes for NPA. The maximum number of digits to be entered must be the lesser of 10 or 10-m (11-m for 1+Dialing), where: m = number of digits entered for NPA. This number does not have to be leftwise unique. For non leftwise unique numbers, the longer number takes precedence over the shorter number. However, the exact same numbers (not leftwise unique and the same length) are still blocked.
- ITEI	(0)-127	Incoming trunk group exclusion index.
The following prompts appear if TYPE is NXX		
NXX	xxx	Numbering Plan Exchange (Central Office) code translation, where: xxx = 3 digits. A leading zero is not allowed.

Copyright © 2003-2010 Nortel Networks. All Rights Reserved.

Table 22
LD 90: Enter BARS translation data (cont'd.)

Prompt	Response	Description
	1xxx	NXX code translation using 1+Dialing, where: xxx = 3 digits. The xxx entry must be preceded with the character "1".
	xxx y..y	Extended NXX code, where xxx = 3 digits and y..y = 1-4 digits. Separate the NXX code (xxx) and the extended code (y...y) with a space.
	1xxx y..y	Extended NXX code using 1+Dialing, where xxx = 3 digits and y..y = 1-4 digits. Separate the NXX code (xxx) and the extended code (y..y) with a space. The xxx entry must be preceded with the character "1".
RLI	0-127	Route List Index.
SDRR	a..a	Type of supplemental restriction or recognition, where a..a can be: ALOW = Allowed codes ARRN = Alternate Routing Remote Number DDD = Recognized remote Direct Distance Dial codes DENY = Restricted codes DID = Recognized remote Direct Inward Dial codes ITED = Incoming Trunk group Exclusion Digits LDDD = Recognized Local Direct Distance Dial codes LDID = Recognized Local Direct Inward Dial codes STRK = ADM/MDM trunk groups
DMI	1-255	Digit Manipulation table Index.
DENY	x...x	Number to be denied within the NXX or SDRR. The maximum number of digits to be entered = 7-m (8-m for 1+Dialing), where: m = number of digits entered for NXX. This number does not have to be leftwise unique. For non leftwise unique numbers, the longer number takes precedence over the shorter number. However, the exact same numbers (not leftwise unique and the same length) are still blocked.
- LDID	x...x	Local DID number recognized within the NXX. The maximum number of digits to be entered = 7-m (8-m for 1+Dialing), where: m = number of digits entered for NXX. This number does not have to be leftwise unique. For non leftwise unique numbers, the longer number takes precedence over the shorter number. However, the exact same numbers (not leftwise unique and the same length) are still blocked.

Copyright © 2003-2010 Nortel Networks. All Rights Reserved.

Table 22
LD 90: Enter BARS translation data (cont'd.)

Prompt	Response	Description
- LDDD	x...x	Local DDD number recognized within the NXX. The maximum number of digits to be entered = 7-m (8-m for 1+Dialing), where: m = number of digits entered for NXX. This number does not have to be leftwise unique. For non leftwise unique numbers, the longer number takes precedence over the shorter number. However, the exact same numbers (not leftwise unique and the same length) are still blocked.
- DID	x...x	Remote DID number recognized within the NXX. The maximum number of digits to be entered = 7-m (8-m for 1+Dialing), where: m = number of digits entered for NXX. This number does not have to be leftwise unique. For non leftwise unique numbers, the longer number takes precedence over the shorter number. However, the exact same numbers (not leftwise unique and the same length) are still blocked.
- DDD	x...x	Remote DDD number recognized within the NXX. The maximum number of digits to be entered = 7-m (8-m for 1+Dialing), where: m = number of digits entered for NXX. This number does not have to be leftwise unique. For non leftwise unique numbers, the longer number takes precedence over the shorter number. However, the exact same numbers (not leftwise unique and the same length) are still blocked.
- ITED	x...x	Incoming trunk group exclusion codes for NXX. The maximum number of digits to be entered = 7-m (8-m for 1+Dialing), where: m = number of digits entered for NXX. This number does not have to be leftwise unique. For non leftwise unique numbers, the longer number takes precedence over the shorter number. However, the exact same numbers (not leftwise unique and the same length) are still blocked.
- ITEI	(0)-255	Incoming trunk group exclusion index.
The following prompts appear if TYPE is SPN:		
SPN	x...x x...x	Special Number translation. Enter SPN in groups of 3 or 4 digits, separated by a space (for example, xxxx xxx xxxx). The SPN can be up to 19 digits long. The maximum length no longer depends on whether or not the first digit of the SPN is a "1". That restriction is removed. The maximum number of groups allowed is 5.
RLI	0-127	Route list index.

Copyright © 2003-2010 Nortel Networks. All Rights Reserved.

Table 22
LD 90: Enter BARS translation data (cont'd.)

Prompt	Response	Description
SDRR	a..a	Type of supplemental restriction or recognition, where a..a can be: ALOW = Allowed codes ARRN = Alternate Routing Remote Number DDD = Recognized remote Direct Distance Dial codes DENY = Restricted codes DID = Recognized remote Direct Inward Dial codes ITED = Incoming Trunk group Exclusion Digits LDDD = Recognized Local Direct Distance Dial codes LDID = Recognized Local Direct Inward Dial codes STRK = ADM/MDM trunk groups
DMI	1-255	Digit manipulation table index.
DENY	x...x	Number to be denied within the SPN or SDRR.
- LDID	x...x	Local DID number recognized within the SPN. The maximum number of digits to be entered must be the lesser of 10 or 19-m, where m = number of digits entered for SPN. This number does not have to be leftwise unique. For non leftwise unique numbers, the longer number takes precedence over the shorter number. However, the exact same numbers (not leftwise unique and the same length) are still blocked.
- LDDD	x...x	Local DDD number recognized within the SPN. The maximum number of digits to be entered must be the lesser of 10 or 19-m, where m = number of digits entered for SPN. This number does not have to be leftwise unique. For non leftwise unique numbers, the longer number takes precedence over the shorter number. However, the exact same numbers (not leftwise unique and the same length) are still blocked.
- DID	x...x	Remote DID number recognized within the SPN. The maximum number of digits to be entered must be the lesser of 10 or 19-m, where m = number of digits entered for SPN. This number does not have to be leftwise unique. For non leftwise unique numbers, the longer number takes precedence over the shorter number. However, the exact same numbers (not leftwise unique and the same length) are still blocked.

Copyright © 2003-2010 Nortel Networks. All Rights Reserved.

Table 22
LD 90: Enter BARS translation data (cont'd.)

Prompt	Response	Description
- DDD	x...x	Remote DDD number recognized within the SPN. The maximum number of digits to be entered must be the lesser of 10 or 19-m, where m = number of digits entered for SPN. This number does not have to be leftwise unique. For non leftwise unique numbers, the longer number takes precedence over the shorter number. However, the exact same numbers (not leftwise unique and the same length) are still blocked.
- ITED	x...x	Incoming trunk group exclusion codes for SPN. The maximum number of digits to be entered must be the lesser of 10 or 19-m, where m = number of digits entered for SPN. This number does not have to be leftwise unique. For non leftwise unique numbers, the longer number takes precedence over the shorter number. However, the exact same numbers (not leftwise unique and the same length) are still blocked.
- ITEI	(0)-255	Incoming trunk group exclusion index.
The following prompts appear if TYPE is NSCL:		
NSCC	xxx	One- to three-digit network speed call access code.
SSCL	0-4095	System speed call list number.

Table 23
LD 16: Enter data to configure a conventional main for off-net number recognition

Prompt	Response	Description
REQ	NEW CHG	Add or change a route.
TYPE	RDB	Route Data Block.
CUST	xx	Customer number as defined in LD 15.
ROUT	0-511	Route number. Range for Large System and CS 1000E system.
	0-127	Range for Meridian 1 Small System, Media Gateway 1000B, and Media Gateway 1000T.
TKTP	TIE	TIE Trunk.
CNVT	(NO) YES	Route to conventional switch.
- DDMI	(0)-127	Digit manipulation index. DDMI is prompted if CNVT = YES.
- ATDN	xxxx	Attendant DN of conventional Main. ATDN is prompted if CVNT = YES. If the DN expansion package is equipped, the attendant DN can have up to 7 digits; otherwise, only 4 digits can be entered.

Copyright © 2003-2010 Nortel Networks. All Rights Reserved.

Enter data to assign a NCOS group number to a list of items

This requires the user to access several overlay programs. In all cases, the prompt is NCOS, the range is 0-99, and the default is 0.

- Analog (500/2500-type) (LD 10)
- Meridian Modular telephones, SL-1 telephones, M1000 series telephones, M2000 series digital telephones, M3000 Touchphones (LD 11)
- Attendant consoles (LD 12)
- Trunks (LD 14)
- Direct Inward System Access Directory Number or DISA DN (LD 24)
- System Speed Call (LD 18)
- Authorization Code (LD 88)

Back up the database

The final step in configuring BARS is performing a data dump to backup the customer database:

Procedure 1
Backing up the database

Step	Action
1	Log into the Call Server using **admin2** log in and password.
2	Load the Equipment Date Dump Program (LD 43). At the prompt, enter: LD 43
3	When “EDD000” appears on the terminal, enter: **EDD**.
4	“DATADUMP COMPLETE” and “DATABASE BACKUP COMPLETE” will appear once the data dump is complete.
5	**** Exit program.

--End--

NARS

Task summary list

The following is a summary of the tasks in this section:

1. Table 24 "LD 87: Enter data for each Network Class of Status (NCOS) group" (page 88)
2. Table 25 "LD 86: Enter data to define NARS feature parameters" (page 88)

Copyright © 2003-2010 Nortel Networks. All Rights Reserved.

3. Table 26 "LD 86: Enter data for each Digit Manipulation Index (DMI)" (page 89)
4. Table 27 "LD 87: Enter data for each Free Calling Area Screening (FCAS)" (page 90)
5. Table 28 "LD 86: Enter data for each route list associated with ADGT" (page 90)
6. Table 29 "LD 86: Enter data for each Incoming Trunk Group Exclusion (ITGE) Index" (page 91)
7. Table 30 "LD 90: Enter NARS translation data" (page 92)
8. Table 31 "LD 16: Enter data to configure conventional main for off-net number recognition" (page 99)
9. “Enter data to assign a NCOS group number to a list of items” (page 100)
10. “Back up the database” (page 100)

Table 24
LD 87: Enter data for each Network Class of Status (NCOS) group

Prompt	Response	Description
REQ	NEW CHG OUT	Create, change, or remove data.
CUST	xx	Customer number as defined in LD 15.
FEAT	NCTL	Feature = Network Control.
NCOS	(0)-99	NCOS group to be added, changed, or removed.
FRL	(0)-7	Facility Restriction Level (FRL). Your entry determines the entries in a Route List Index (RLI) to which it has access. 0 is the most restrictive, 7 is the least restrictive and can access more entries. FRL is assigned to each NCOS.
RWTA	(NO) YES	Expensive Route Warning Tone (ERWT).

Table 25
LD 86: Enter data to define NARS feature parameters

Prompt	Response	Description
REQ	NEW CHG OUT	Create, change, or remove data.
CUST	xx	Customer number as defined in LD 15.
FEAT	ESN	Feature = Electronic Switched Network.
MXLC	0-999	Maximum number of LOC codes.

Copyright © 2003-2010 Nortel Networks. All Rights Reserved.

Table 25
LD 86: Enter data to define NARS feature parameters (cont'd.)

Prompt	Response	Description
	0-16000	Maximum number of LOC codes (with the ESN Location Code Expansion feature and the FNP feature enabled) Refer to: ESN Location Code Expansion feature in *ISDN Primary Rate Interface Fundamentals (NN43001-569)*.
MXSD	(0)-1500	Maximum Supplemental Digit restriction blocks.
MXIX	0-255	Maximum number of ITGE tables.
MXDM	0-256	Maximum number of digit manipulation tables, where xxxx = 0-256 if Flexible Numbering Plan (FNP) package 160 is not equipped; 0-2000 if FNP package 160 is equipped.
MXRL	0-256	Maximum number of route lists.
MXFC	0-255	Maximum number of FCAS tables.
AC1	xx	One or two digit NARS/BARS Access Code 1.
AC2	xx	One or two digit NARS Access Code 2.
DLTN	(YES) NO	NARS/BARS dial tone after dialing AC1 or AC2.
ERWT	(YES) NO	ERWT is not (is) provided. Note that ERWT is not supported on TIE Trunks.
ERDT	0-(6)-10	Time in seconds that an end user has to accept or reject an expensive route after ERWT is given; default is 6; range is in 2-second intervals.
TODS	x hh mm hh mm	Start and end time-of-day schedules. Where: x = schedule number for NARS = 0-7, hh = hour, mm = minutes.
TGAR	(NO) YES	Check for TGAR, where: YES = examine TGAR/TARG when call is placed. NO = ignore TGAR/TARG when call is placed.

Table 26
LD 86: Enter data for each Digit Manipulation Index (DMI)

Prompt	Response	Description
REQ	NEW CHG OUT	Create, change, or remove data.
CUST	xx	Customer number as defined in LD 15.
FEAT	DGT	Feature = Digit Manipulation Index.
DMI	(0)-255	Digit manipulation table index, xxxx = 0-255 if FNP package 160 is not equipped; 0-1999 if FNP package 160 is equipped. The maximum number of digit manipulation tables is defined by prompt MXDM.

Copyright © 2003-2010 Nortel Networks. All Rights Reserved.

Table 26
LD 86: Enter data for each Digit Manipulation Index (DMI) (cont'd.)

Prompt	Response	Description
DEL	(0)-19	Number of leading digits to be deleted from the dialed number; default is 0.
INST	x...x	Up to 31 leading digits may be inserted.

Table 27
LD 87: Enter data for each Free Calling Area Screening (FCAS)

Prompt	Response	Description
REQ	NEW CHG PRT	Action request.
CUST	xx	Customer number as defined in LD 15.
FEAT	FCAS	Feature = Free Calling Area Screening.
FCI	1-255	FCAS table index number.
NPA		Numbering Plan Area (NPA) code translation. NARS allows up to 15 NPA codes per table with a maximum of 800 NXX codes each.
	xxx	NPA code translation, where xxx = 200-999. The first digit must be 2-9; the second and third digits can be 0-9. Omit the "1" if using1+NPA format.
	xxx y..y z..z	Extended NPA code translation, where xxx = 3 digits, y..y = 1-3 digits and z..z = 1-4 digits. Separate xxx, y..y and z..z entries with a space. Omit the "1" if using1+NPA format.
NXX	ALOW, DENY	Allow or Deny NXX codes for NPA.
DENY	xxx xxx	NXX code or range of codes to be denied.
ALOW	xxxx xxxx	NXX code or range of codes to be allowed.

Table 28
LD 86: Enter data for each route list associated with ADGT

Prompt	Response	Description
REQ	NEW CHG OUT	Create, change, or remove data.
CUST	xx	Customer number as defined in LD 15.
FEAT	RLB	Feature = Route list data block.
RLI	0-255	Route list index number. The range is 0-1999 with Flexible Numbering Plan.
ENTR	0-63	Route list entry number.
ROUT	0-511	Route number associated with the index. Range for Large System and CS 1000E system.
	0-127	Range for Meridian 1 Small System, Media Gateway 1000B, and Media Gateway 1000T.

Copyright © 2003-2010 Nortel Networks. All Rights Reserved.

Table 28
LD 86: Enter data for each route list associated with ADGT (cont'd.)

Prompt	Response	Description
TDET	(NO) YES	Tone Detector is (is not) used.
TYPE	aaa	Type of tone detector application, where aaa can be: (CC1) = Tone detector for Special Common Carrier Type 1 TIE = Tone detector for on-net calls CC2 = Tone detector for Special Common Carrier Type 2
TONE	a..a	Type of tone expected from Special Common Carrier, where a..a can be: DIAL = normal dial tone (SCC) = SCC dial tone
TOD	0-7	Time-of-Day schedule associated with the entry. Precede entry with X to remove.
EXP	(NO) YES	Entry is (is not) classed as expensive.
FRL	(0)-7	Facility restriction level. Your entry determines the entries in a Route List Index (RLI) to which it has access. 0 is the most restrictive, 7 is the least restrictive and can access more entries. FRL is assigned to each NCOS.
DMI	1-xxxx	Digit manipulation table index, xxxx = 0-255 if FNP package 160 is not equipped; 0-2000 if FNP package 160 is equipped. The maximum number of Digit manipulation tables is defined by prompt MXDM.
FCI	(0)-255	FCAS, (0) = no FCAS required.
OHQ	(NO) YES	Off-Hook Queuing (OHQ) is (is not) allowed on the entry.
CBQ	(NO) YES	Call Back Queuing (CBQ) is (is not) allowed on the entry.
ISET	(0)-64	Number of entries in the initial route set.
MFRL	(MIN), 0-7	Minimum Facility Restriction Level (MFRL), where: 0-7 = the minimum FRL used to determine autocode prompting; (MIN) = default minimum FRL value.

Table 29
LD 86: Enter data for each Incoming Trunk Group Exclusion (ITGE) Index

Prompt	Response	Description
REQ	NEW CHG OUT	Create, change, or remove data.
CUST	xx	Customer number as defined in LD 15.
FEAT	ITGE	Feature = Incoming Trunk Group Exclusion.

Copyright © 2003-2010 Nortel Networks. All Rights Reserved.

Table 29
LD 86: Enter data for each Incoming Trunk Group Exclusion (ITGE) Index (cont'd.)

Prompt	Response	Description
ITEI	1-127	ITGE index number; if REQ was "OUT" all route entries defined for the entered index are removed.
RTNO	0-511 0-127	Route number associated with index; precede entry with X to delete an existing route. For Large Systems For Small Systems

Table 30
LD 90: Enter NARS translation data

Prompt	Response	Description
REQ	NEW CHG OUT	Create, change, or remove data.
CUST	xx	Customer number as defined in LD 15.
FEAT	NET	Network Translation Tables.
TRAN	aaa	Translator, where aaa can be: AC1 = Access Code 1 AC2 = Access Code 2 SUM = Summary of Network Translators
TYPE	a...a	Type of data block, where a...a can be: LOC = Location code HNPA = Home NPA translation code NPA = Number plan area translation code HLOC = Home location code NXX = Central Office translation code SPN = Special Number translation code NSCL = Speed call
	<return>	Return to REQ.
The following prompt occurs if TYPE is LOC:		
LOC	xxx y..y	Location code, where xxx = 3 digits and y..y = 1-4 digits. The extended code (y..y) entry is optional. Separate the NXX code (xxx) and the extended code (y...y) with a space.
RLI	0-255	Route list index.
ITEI	(0)-255	Incoming trunk group exclusion index.
LDN	xx...xx	Listed Directory Number (LDN) including NPA of up to 10 digits.
DID	(NO) YES	This location arranged for DID.
-- MNXX	(NO) YES	Multiple NXX codes and ranges.

Copyright © 2003-2010 Nortel Networks. All Rights Reserved.

Table 30
LD 90: Enter NARS translation data (cont'd.)

Prompt	Response	Description
-- SAVE	1-7	Saved digits (number of trailing digits to be saved in dialed extension number – DID only).
--- OFFC	xxx	Office Code (in North America, the NXX of the DID number) Prompted if MNXX = YES ***Note:*** All OFFC entries must be the same length.
-- RNGE	0000000-9999999	Range (upper and lower limit for DID number range) ***Note:*** OFFC entries must be the same length. Enter the same number of digits as the number of trailing digits to be saved. For example, if SAVE=4, then RNGE is 0000-9999.
The following prompt occurs if TYPE is HNPA:		
HNPA		Home Numbering Plan Area code.
	xxx	Response for HNPA Area code, where xxx = 200-999. A leading zero is not allowed.
	1xxx	Response for HNPA code using 1+Dialing, where xxx = 200-999. Note that the xxx entry must be preceded with the character "1".
The following prompts occur if TYPE is NPA:		
NPA		NPA code translation.
	xxx	NPA code translation, where xxx = 3 digits. A leading zero is not allowed.
	xxx y..y z..z	Extended NPA code translation. An extended NPA code can be from 4 to 10 digits, where xxx = 3 digits, y..y = 1-3 digits and z..z = 1-4 digits. Separate xxx, y..y and z..z entries with a space.
	1xxx	NPA code translation using 1+Dialing, where xxx = 3 digits. Note that the xxx entry must be preceded with the character "1".
	1xxx y..y z..z	Extended NPA code translation using 1+Dialing. An extended NPA code using 1+Dialing can be from 5 to 11 digits, where xxx = 3 digits, y..y = 1-3 digits and z..z = 1-4 digits. Separate xxx, y..y and z..z entries with a space. Note that the xxx entry must be preceded with the character "1".
RLI	0-255	Route list index.

Copyright © 2003-2010 Nortel Networks. All Rights Reserved.

Table 30
LD 90: Enter NARS translation data (cont'd.)

Prompt	Response	Description
SDRR	a..a	Type of supplemental restriction or recognition, where a..a can be: ALOW = Allowed codes ARRN = Alternate Routing Remote Number DDD = Recognized remote Direct Distance Dial codes DENY = Restricted codes DID = Recognized remote Direct Inward Dial codes ITED = Incoming Trunk group Exclusion Digits LDDD = Recognized Local Direct Distance Dial codes LDID = Recognized Local Direct Inward Dial codes STRK = ADM/MDM trunk groups
SDRR	aaa	Type of supplemental restriction or recognition. See prompt above for response options.
DMI	1-255	Digit manipulation table index.
DENY	x...x	Number to be denied within the NPA or SDRR. The maximum number of digits to be entered must be the lesser of 10 or 10-m (11-m for 1+Dialing), where: m = number of digits entered for NPA. This number does not have to be leftwise unique. For non leftwise unique numbers, the longer number takes precedence over the shorter number. However, the exact same numbers (not leftwise unique and the same length) are still blocked.
- LDID	x...x	Local DID number recognized within the NPA. The maximum number of digits to be entered must be the lesser of 10 or 10-m (11-m for 1+Dialing), where: m = number of digits entered for NPA. This number does not have to be leftwise unique. For non leftwise unique numbers, the longer number takes precedence over the shorter number. However, the exact same numbers (not leftwise unique and the same length) are still blocked.

Copyright © 2003-2010 Nortel Networks. All Rights Reserved.

Table 30
LD 90: Enter NARS translation data (cont'd.)

Prompt	Response	Description
- LDDD	x...x	Local DDD number recognized within the NPA. The maximum number of digits to be entered must be the lesser of 10 or 10-m (11-m for 1+Dialing), where: m = number of digits entered for NPA. This number does not have to be leftwise unique. For non leftwise unique numbers, the longer number takes precedence over the shorter number. However, the exact same numbers (not leftwise unique and the same length) are still blocked.
- DID	x...x	Remote DID number recognized within the NPA. The maximum number of digits to be entered must be the lesser of 10 or 10-m (11-m for 1+Dialing), where: m = number of digits entered for NPA. This number does not have to be leftwise unique. For non leftwise unique numbers, the longer number takes precedence over the shorter number. However, the exact same numbers (not leftwise unique and the same length) are still blocked.
- DDD	x...x	Remote DDD number recognized within the NPA. The maximum number of digits to be entered must be the lesser of 10 or 10-m (11-m for 1+Dialing), where: m = number of digits entered for NPA. This number does not have to be leftwise unique. For non leftwise unique numbers, the longer number takes precedence over the shorter number. However, the exact same numbers (not leftwise unique and the same length) are still blocked.
- ITED	x...x	Incoming trunk group exclusion codes for NPA. The maximum number of digits to be entered must be the lesser of 10 or 10-m (11-m for 1+Dialing), where: m = number of digits entered for NPA. This number does not have to be leftwise unique. For non leftwise unique numbers, the longer number takes precedence over the shorter number. However, the exact same numbers (not leftwise unique and the same length) are still blocked.
- ITEI	(0)-127	Incoming trunk group exclusion index.
The following prompts appear if TYPE is NXX		
NXX	xxx	Numbering Plan Exchange (Central Office) code translation, where: xxx = 3 digits. A leading zero is not allowed.

Copyright © 2003-2010 Nortel Networks. All Rights Reserved.

Table 30
LD 90: Enter NARS translation data (cont'd.)

Prompt	Response	Description
	1xxx	NXX code translation using 1+Dialing, where: xxx = 3 digits. The xxx entry must be preceded with the character "1".
	xxx y..y	Extended NXX code, where xxx = 3 digits and y..y = 1-4 digits. Separate the NXX code (xxx) and the extended code (y...y) with a space.
	1xxx y..y	Extended NXX code using 1+Dialing, where xxx = 3 digits and y..y = 1-4 digits. Separate the NXX code (xxx) and the extended code (y..y) with a space. The xxx entry must be preceded with the character "1".
RLI	0-255	Route list index.
SDRR	a..a	Type of supplemental restriction or recognition, where a..a can be: ALOW = Allowed codes ARRN = Alternate Routing Remote Number DDD = Recognized remote Direct Distance Dial codes DENY = Restricted codes DID = Recognized remote Direct Inward Dial codes ITED = Incoming Trunk group Exclusion Digits LDDD = Recognized Local Direct Distance Dial codes LDID = Recognized Local Direct Inward Dial codes STRK = ADM/MDM trunk groups
DMI	1-255	Digit manipulation table Index.
DENY	x...x	Number to be denied within the NXX or SDRR. The maximum number of digits to be entered = 7-m (8-m for 1+Dialing), where: m = number of digits entered for NXX. This number does not have to be leftwise unique. For non leftwise unique numbers, the longer number takes precedence over the shorter number. However, the exact same numbers (not leftwise unique and the same length) are still blocked.
- LDID	x...x	Local DID number recognized within the NXX. The maximum number of digits to be entered = 7-m (8-m for 1+Dialing), where: m = number of digits entered for NXX. This number does not have to be leftwise unique. For non leftwise unique numbers, the longer number takes precedence over the shorter number. However, the exact same numbers (not leftwise unique and the same length) are still blocked.

Copyright © 2003-2010 Nortel Networks. All Rights Reserved.

Table 30
LD 90: Enter NARS translation data (cont'd.)

Prompt	Response	Description
- LDDD	x...x	Local DDD number recognized within the NXX. The maximum number of digits to be entered = 7-m (8-m for 1+Dialing), where: m = number of digits entered for NXX. This number does not have to be leftwise unique. For non leftwise unique numbers, the longer number takes precedence over the shorter number. However, the exact same numbers (not leftwise unique and the same length) are still blocked.
- DID	x...x	Remote DID number recognized within the NXX. The maximum number of digits to be entered = 7-m (8-m for 1+Dialing), where: m = number of digits entered for NXX. This number does not have to be leftwise unique. For non leftwise unique numbers, the longer number takes precedence over the shorter number. However, the exact same numbers (not leftwise unique and the same length) are still blocked.
- DDD	x...x	Remote DDD number recognized within the NXX. The maximum number of digits to be entered = 7-m (8-m for 1+Dialing), where: m = number of digits entered for NXX. This number does not have to be leftwise unique. For non leftwise unique numbers, the longer number takes precedence over the shorter number. However, the exact same numbers (not leftwise unique and the same length) are still blocked.
- ITED	x...x	Incoming trunk group exclusion codes for NXX. The maximum number of digits to be entered = 7-m (8-m for 1+Dialing), where: m = number of digits entered for NXX. This number does not have to be leftwise unique. For non leftwise unique numbers, the longer number takes precedence over the shorter number. However, the exact same numbers (not leftwise unique and the same length) are still blocked.
- ITEI	(0)-255	Incoming trunk group exclusion index.
The following prompts appear if TYPE is SPN:		
SPN	x...x x...x	Special Number (SPN) translation. Enter SPN in groups of 3 or 4 digits, separated by a space (for example, xxxx xxx xxxx). The SPN can be up to 19 digits long. The maximum length no longer depends on whether or not the first digit of the SPN is a "1". That restriction is removed. The maximum number of groups allowed is 5.
RLI	0-127	Route list index.

Copyright © 2003-2010 Nortel Networks. All Rights Reserved.

Table 30
LD 90: Enter NARS translation data (cont'd.)

Prompt	Response	Description
SDRR	a..a	Type of supplemental restriction or recognition, where a..a can be: ALOW = Allowed codes ARRN = Alternate Routing Remote Number DDD = Recognized remote Direct Distance Dial codes DENY = Restricted codes DID = Recognized remote Direct Inward Dial codes ITED = Incoming Trunk group Exclusion Digits LDDD = Recognized Local Direct Distance Dial codes LDID = Recognized Local Direct Inward Dial codes STRK = ADM/MDM trunk groups
DMI	1-255	Digit manipulation table index.
DENY	x...x	Number to be denied within the SPN or SDRR.
- LDID	x...x	Local DID number recognized within the SPN. The maximum number of digits to be entered must be the lesser of 10 or 19-m, where m = number of digits entered for SPN. This number does not have to be leftwise unique. For non leftwise unique numbers, the longer number takes precedence over the shorter number. However, the exact same numbers (not leftwise unique and the same length) are still blocked.
- LDDD	x...x	Local DDD number recognized within the SPN. The maximum number of digits to be entered must be the lesser of 10 or 19-m, where m = number of digits entered for SPN. This number does not have to be leftwise unique. For non leftwise unique numbers, the longer number takes precedence over the shorter number. However, the exact same numbers (not leftwise unique and the same length) are still blocked.
- DID	x...x	Remote DID number recognized within the SPN. The maximum number of digits to be entered must be the lesser of 10 or 19-m, where m = number of digits entered for SPN. This number does not have to be leftwise unique. For non leftwise unique numbers, the longer number takes precedence over the shorter number. However, the exact same numbers (not leftwise unique and the same length) are still blocked.

Copyright © 2003-2010 Nortel Networks. All Rights Reserved.

Table 30
LD 90: Enter NARS translation data (cont'd.)

Prompt	Response	Description
- DDD	x...x	Remote DDD number recognized within the SPN. The maximum number of digits to be entered must be the lesser of 10 or 19-m, where m = number of digits entered for SPN. This number does not have to be leftwise unique. For non leftwise unique numbers, the longer number takes precedence over the shorter number. However, the exact same numbers (not leftwise unique and the same length) are still blocked.
- ITED	x...x	Incoming trunk group exclusion codes for SPN. The maximum number of digits to be entered must be the lesser of 10 or 19-m, where m = number of digits entered for SPN. This number does not have to be leftwise unique. For non leftwise unique numbers, the longer number takes precedence over the shorter number. However, the exact same numbers (not leftwise unique and the same length) are still blocked.
- ITEI	(0)-255	Incoming trunk group exclusion index.
The following prompts appear if TYPE is NSCL:		
NSCC	xxx	One- to three-digit network speed call access code.
SSCL	0-4095	System speed call list number.

Table 31
LD 16: Enter data to configure conventional main for off-net number recognition

Prompt	Response	Description
REQ	NEW CHG	Add or change a route.
TYPE	RDB	Route data block.
CUST	xx	Customer number as defined in LD 15.
ROUT	0-511	Route number. Range for Large System and CS 1000E system.
	0-127	Range for Meridian 1 Small System, Media Gateway 1000B, and Media Gateway 1000T.
TKTP	TIE	TIE Trunk.
CNVT	(NO) YES	Route to Conventional switch; CNVT is prompted if TKTP = TIE.
DDMI	(0)-255	Digit manipulation index; DDMI is prompted if CNVT = YES.
ATDN	xxxx	Attendant DN of Conventional Main. ATDN is prompted if CVNT = YES. If the DN expansion package is equipped, the attendant DN can have up to 7 digits; otherwise, only 4 digits can be entered.

Copyright © 2003-2010 Nortel Networks. All Rights Reserved.

Enter data to assign a NCOS group number to a list of items

This requires the end user to access several overlay programs. In all cases, the prompt is NCOS; the range is 0-99, the default is 0. Enter data to assign a Network Class of Service group number to each of the following items:

- Analog (500/2500-type) telephones (LD 10)
- Meridian Modular telephones, SL-1 telephones, M1000 series telephones, M2000 series digital telephones, M3000 Touchphones (LD 11)
- Attendant consoles (LD 12)
- Trunks (LD 14)
- Direct Inward System Access Directory Number or DISA DN (LD 24)
- System Speed Call (LD 18)
- Authorization Code (LD 88)

Back up the database

The final step in configuring NARS is performing a data dump to backup the customer database:

Procedure 2
Backing up the database

Step	Action
1	Log into the system.
2	Load the Equipment Date Dump Program (LD 43). At the prompt, enter: LD 43
3	When “EDD000” appears on the terminal, enter: **EDD**.
4	When “DATADUMP COMPLETE” and “DATABASE BACKUP COMPLETE” will appear once the data dump is complete.
5	**** Exit program.

--End--

1+Dialing for interchangeable NPA codes

Table 32 "Dialing plan using 1+Dialing" (page 101) shows the uniform 1+Dialing dialing plan for interchangeable NPA codes in this section

Copyright © 2003-2010 Nortel Networks. All Rights Reserved.

Table 32
Dialing plan using 1+Dialing

Dialing format	Call type
AC1 + 1 + NXX + NXX + XXXX	11 digit public call (NPA)
AC2 + NXX + XXXX	7 digit public call (NXX)
AC1 + NXX + XXXX	7 digit private call (LOC)
Legend **AC1 = BARS/NARS Access Code 1 (on-net and long distance calls)** **AC2 = NARS Access Code 2 (off-net and local calls)** **1 = indicates 10 digit Interchangeable NPA code format to follow** **N = Digits 2 to 9** **X = Digits 0 to 9**	

Implementation of this dialing plan requires all NPA codes be entered as four digit codes where the first digit is always "1". In other words the NPA "345" would be entered as "1345" and the end user would have to dial "1345" to access NPA "345".

The following shows the steps that must be performed to correctly implement 1+Dialing for Interchangeable NPA codes:

- Route calls with NPA = 202, 303, and 888 over route 1 using AC1.
- Route calls with NXX = 987, 876, and 765 over route 2 using AC2.
- Route calls with LOC = 777, 888, and 999 over route 3 using AC1

Task summary list

The following is a summary of the tasks in this section:

1. Table 33 "LD 90: Configure Electronic Switched Network (ESN) data block for 1+Dialing" (page 101)
2. Table 34 "LD 86: Configure route list blocks for 1+Dialing" (page 102)
3. Table 35 "LD 90: Configure numbering plan area codes for 1+Dialing" (page 102)
4. Table 36 "LD 90: Configure central office codes for 1+Dialing" (page 103)
5. Table 37 "LD 90: Configure location codes for 1+Dialing" (page 103)

Table 33
LD 90: Configure Electronic Switched Network (ESN) data block for 1+Dialing

Prompt	Response	Description
REQ	NEW	Request a NEW data block.
CUST	xx	Customer number as defined in LD 15.

Copyright © 2003-2010 Nortel Networks. All Rights Reserved.

Table 33
LD 90: Configure Electronic Switched Network (ESN) data block for 1+Dialing (cont'd.)

Prompt	Response	Description
FEAT	ESN	Feature = Electronic Switch Network data block.
...		
AC1	6	BARS/NARS Access Code 1 (on-net and long distance calls).
AC2	9	NARS Access Code 2 (off-net and local calls).
...		

Table 34
LD 86: Configure route list blocks for 1+Dialing

Prompt	Response	Description
REQ	NEW	Request NEW data block.
CUST	xx	Customer number as defined in LD 15.
FEAT	RLB	Route List Block data block.
RLI	1	Route List Index 1.
ENTR	0	Entry 0 of Route List Index 1.
LTER	NO	Local Termination entry.
ROUT	1	Route number.
...		

Repeat Step for RLI 2 using route 2 and RLI 3 using route 3.

Table 35
LD 90: Configure numbering plan area codes for 1+Dialing

Prompt	Response	Description
REQ	NEW	Request NEW data block.
CUST	xx	Customer number as defined in LD 15.
FEAT	NET	Network Translator data block.
TRAN	AC1	AC1 Translator data block.
TYPE	NPA	NPA translation.
NPA	1202	NPA code.
- RLI	1	Route List Index this NPA uses.
- SDDR	<cr>	Supplementary Digit Restriction or Recognition. <cr> indicates the default (NO) is to be used.
NPA	1303	Numbering Plan Area code.
- RLI	1	Route List Index this NPA uses.
- SDDR	<cr>	Supplementary Digit Restriction or Recognition. <cr> indicates the default (NO) is to be used.

Copyright © 2003-2010 Nortel Networks. All Rights Reserved.

Table 35
LD 90: Configure numbering plan area codes for 1+Dialing (cont'd.)

Prompt	Response	Description
NPA	1888	NPA code. If 1+Dialing were not used, this code would be entered as 888 and conflict with the Location code 888.
- RLI	1	Route List Index this NPA uses.
- SDDR	<cr>	Supplementary Digit Restriction or Recognition. <cr> indicates the default (NO) is to be used.

Table 36
LD 90: Configure central office codes for 1+Dialing

Prompt	Response	Description
REQ	NEW	Request NEW data block.
CUST	xx	Customer number as defined in LD 15.
FEAT	NET	Network Translator data block.
TRAN	AC2	AC2 Translator data block.
TYPE	NXX	NXX (Central Office code) translation.
NXX	987	NXX code.
- RLI	2	Route List Index this NXX uses.
- SDDR	<cr>	Supplementary Digit Restriction or Recognition. <cr> indicates the default (NO) is to be used.
NXX	876	NXX code.
- RLI	2	Route List Index this NXX uses.
- SDDR	<cr>	Supplementary Digit Restriction or Recognition. <cr> indicates the default (NO) is to be used.
NXX	765	NXX code.
- RLI	2	Route List Index this NXX uses.
- SDDR	<cr>	Supplementary Digit Restriction or Recognition. <cr> indicates the default (NO) is to be used.

Table 37
LD 90: Configure location codes for 1+Dialing

Prompt	Response	Description
REQ	NEW	Request NEW data block.
CUST	xx	Customer number as defined in LD 15.
FEAT	NET	Network Translator data block.
TRAN	AC1	AC1 Translator data block.
TYPE	LOC	LOC (Location Code) translation.
LOC	777	LOC code.

Copyright © 2003-2010 Nortel Networks. All Rights Reserved.

Table 37
LD 90: Configure location codes for 1+Dialing (cont'd.)

Prompt	Response	Description
- RLI	3	Route List Index this LOC uses.
- SDDR	<cr>	Supplementary Digit Restriction or Recognition. <cr> indicates the default (NO) is to be used.
LOC	888	LOC code. If 1+Dialing had not been used for the 888 NPA code, this Location code would have resulted in a dialing conflict.
- RLI	3	Route List Index this LOC uses.
- SDDR	<cr>	Supplementary Digit Restriction or Recognition. <cr> indicates the default (NO) is to be used.
NXX	999	LOC code.
- RLI	3	Route List Index this LOC uses.
- SDDR	<cr>	Supplementary Digit Restriction or Recognition. <cr> indicates the default (NO) is to be used.

Equal Access

Equal Access is not a Basic Alternate Route Selection (BARS) or Network Alternate Route Selection (NARS) feature and does not require BARS or NARS dialing to function correctly.

The implementation tasks show how to configure the following in a BARS or NARS environment:

- Equal Access restrictions
- Equal Access routing

Equal Access restriction for BARS or NARS

Equal Access toll restriction is intended for use on an outgoing route from a system to a Central Office. This feature is not intended for restriction of calls which terminate on a network node. Therefore, network signaling (ESN3, ESN5, or ETN) is not supported.

Within a network Equal Access, toll calls should be restricted at the outgoing node (the node that is directly connected to the Central Office).

Copyright © 2003-2010 Nortel Networks. All Rights Reserved.

These tasks must be performed to correctly implement Equal Access restrictions for BARS or NARS. The following assumptions are used:

- Equal Access is for customer 0.
- All Equal Access routing is performed using route 10.
- All direct dialed Equal Access toll calls from sets with a Network Class of Service (NCOS) of 4 are to be restricted.

Task summary list

The following is a summary of the tasks in this section:

1. Table 38 "LD 87: Configure an NCOS for Equal Access" (page 105)
2. Table 39 "LD 10, LD 11 or LD 27: Assign NCOS to a telephone" (page 105)
3. Table 40 "LD 16: Enable Equal Access restrictions on the route" (page 106)

Table 38
LD 87: Configure an NCOS for Equal Access

Prompt	Response	Description
REQ	CHG	Modify existing data block.
CUST	xx	Customer number as defined in LD 15.
FEAT	NCTL	Network Control data block.
...		
NCOS	4	Network Class of Service group.
EQA	YES	Equal Access restrictions allowed.
...		

Table 39
LD 10, LD 11 or LD 27: Assign NCOS to a telephone

Prompt	Response	Description
REQ	CHG	Modify existing data block.
TYPE	aaa	Specify telephone type.
TN	l s c u	Terminal Number Format for Large System and CS 1000E system, where l = loop, s = shelf, c = card, u = unit.
	c u	Format for Meridian 1 Small System, Media Gateway 1000B, and Media Gateway 1000T, where c = card and u = unit.
...		
NCOS	4	Network Class of Service group 4 assigned to telephone.
...		

Copyright © 2003-2010 Nortel Networks. All Rights Reserved.

Table 40
LD 16: Enable Equal Access restrictions on the route

Prompt	Response	Description
REQ	CHG	Change data block.
TYPE	RDB	Route Data Block.
CUST	xx	Customer number as defined in LD 15.
ROUT	0-511	Route number. Range for Large System and CS 1000E system.
	0-127	Range for Meridian 1 Small System, Media Gateway 1000B, and Media Gateway 1000T.
...		
EQAR	YES	Equal Access Restrictions enabled for this route.
NTOL	DENY	North American toll calls are denied.
ITOL	<cr>	International toll calls are denied.

Configure Equal Access routing for BARS or NARS

Equal Access routing does not consider a call's origination type when determining restriction status. Therefore, the previous restriction configuration example applies to all allowable types of Equal Access calls (trunk access code, BARS and NARS).

Configuring BARS or NARS to route Equal Access calls is a matter of assigning the Equal Access identifier (the digits 10) as a Special Number (SPN) and routing the calls accordingly.

The following procedure assumes the following:

- Equal Access is for customer 0.
- Route 10 is used to route Equal Access calls.
- Route List Index (RLI) 100 will have route 10 as a member.
- Access Code 1 (AC1) is used to route all Equal Access calls.
- All direct dialed Equal Access toll calls from sets with a Network Class of Service (NCOS) of 4 are to be restricted.

Note: This procedure uses 10 as the Equal Access identifier SPN. This indicates that the original format Carrier Access Code (CAC) is being used. If the Expanded CAC format is required, define 101 as the Equal Access identifier SPN.

Copyright © 2003-2010 Nortel Networks. All Rights Reserved.

Task summary list

The following is a summary of the tasks in this section:

1. Table 41 "LD 86: Configure a RLI to include route 10 as a member" (page 107)
2. Table 42 "LD 90: Define Equal Access identifier as a SPN" (page 107)
3. Table 43 "LD 87: Configure a NCOS for Equal Access" (page 108)
4. Table 44 "LD 10, LD 11 or LD 27: Assign NCOS to a telephone" (page 108)
5. Table 45 "LD 16: Enable Equal Access restrictions on the route" (page 108)

Table 41
LD 86: Configure a RLI to include route 10 as a member

Prompt	Response	Description
REQ	NEW	Create new data block.
CUST	xx	Customer number as defined in LD 15.
FEAT	RLB	Route List Block.
RLI	100	Route List Index 100.
ENTR	0	Entry number in RLB.
...		
ROUT	10	Route 10 defined as member.
...		

Table 42
LD 90: Define Equal Access identifier as a SPN

Prompt	Response	Description
REQ	NEW	Create a new data block.
CUST	xx	Customer number as defined in LD 15.
FEAT	NET	Network Translator.
TRAN	AC1	Translator for Access Code 1.
TYPE	SPN	Type of number is a Special Number.
SPN	10	Equal Access identifier defined as Special Number.
RLI	100	Route List Index used to route calls using this number.
...		

Copyright © 2003-2010 Nortel Networks. All Rights Reserved.

Table 43
LD 87: Configure a NCOS for Equal Access

Prompt	Response	Description
REQ	CHG	Change existing data block.
CUST	xx	Customer number as defined in LD 15.
FEAT	NCTL	Network Control data block.
...		
NCOS	4	Network Class of Service group.
EQA	YES	Equal Access restrictions allowed.
...		

Table 44
LD 10, LD 11 or LD 27: Assign NCOS to a telephone

Prompt	Response	Description
REQ	CHG	Change existing data block.
TYPE	aaa	Specify telephone type.
TN	l s c u	Specify Terminal Number of telephone to be modified. Format for Large System and CS 1000E system, where l = loop, s = shelf, c = card, u = unit.
	c u	Format for Meridian 1 Small System, Media Gateway 1000B, and Media Gateway 1000T, where c = card and u = unit.
...		
NCOS	4	Network Class of Service group 4 assigned to telephone.
...		

Table 45
LD 16: Enable Equal Access restrictions on the route

Prompt	Response	Description
REQ	CHG	Change data block.
TYPE	RDB	Route Data Block.
CUST	xx	Customer number as defined in LD 15.
ROUT	0-511	Route number. Range for Large System and CS 1000E system.
	0-127	Range for Meridian 1 Small System, Media Gateway 1000B, and Media Gateway 1000T.
...		
EQAR	YES	Equal Access Restrictions enabled for this route.
NTOL	DENY	North American toll calls are denied.

Copyright © 2003-2010 Nortel Networks. All Rights Reserved.

Table 45
LD 16: Enable Equal Access restrictions on the route (cont'd.)

Prompt	Response	Description
ITOL ...	<cr>	International toll calls are denied.

Copyright © 2003-2010 Nortel Networks. All Rights Reserved.

Copyright © 2003-2010 Nortel Networks. All Rights Reserved.

Basic and Network Authorization Codes

Contents

This section includes information on the following topics:

"Overview" (page 111)

"Basic Authorization Code (BAUT)" (page 112)

"Network Authorization Code (NAUT)" (page 149)

Overview

Basic Authorization Code (BAUT) and Network Authorization Code (NAUT) features enable selected users to temporarily override the access restrictions assigned to a station or trunk. A user can enter an authorization code (authcode) to access more of the system facilities than would normally be allowed to the particular station or trunk because of the assigned Network Class of Service (NCOS), Class of Service (COS), and Trunk Group Access Restriction (TGAR) codes.

These features are useful when a user initiates a call from someone else's telephone and requires access to more system facilities (such as access to long distance calling) than are allowed to that telephone. Entering a valid authorization code enables the user to access these additional features. After a valid authorization code is entered, the NCOS, COS, and TGAR associated with the authorization code replace the NCOS, COS, and TGAR associated with the telephone for the duration of the call.

Station Specific Authcode (SSAU) is a special feature that enables the system administrator to control the level of authorization code access on a per telephone basis.

Copyright © 2003-2010 Nortel Networks. All Rights Reserved.

The following features are available:

- Authcode Security enhancements provides Authcode alarm when invalid Authcode entry is detected.
- Collect Call Blocking (Brazil) provides a mechanism for special treatment of incoming Direct Inward Dialing (DID) and Central Office (CO) collect calls on 2 Mbit/sec digital trunks and analog trunks. This feature is provided on a route and individual user basis.
- Direct Private Network Access provides for Direct Inward System Access (DISA) Digit Insertion where 1-31 digits can be automatically inserted for a DISA call, DISA RAN where a DISA caller can be greeted by a recorded announcement, and Authcode-last Retry where a caller can be reprompted for Authcode if the first Authcode entered for Authcode-last is invalid.
- Electronic Lock Network Wid/Private Lines enhances the current Electronic Lock capability over the network and extends the coverage of electronic lock to include private line DNs.
- Wire Analog Trunk for CIS provides the capability to adapt the Meridian 1 to three wire analog trunks used in the Commonwealth of Independent States (CIS) market.

Basic Authorization Code (BAUT)

BAUT (package 25) provides for up to 4096 authorization codes of 1 to 14 digits. Users can enter an authorization code after dialing the Special Prefix (SPRE) and the digit "6" before dialing any call, including a Network Alternate Route Selection (NARS), Basic Alternate Route Selection (BARS), or Coordinated Dialing Plan (CDP) call. With the BAUT feature, an authorization code can be entered when doing the following:

- originating a call from a local station or TIE Trunk
- initiating a call transfer or conference from a local station
- originating a call through the Direct Inward System Access (DISA) feature

Note: Refer to *Dialing Plans Reference (NN43001-283)* for a description of the CDP feature.

Authorization code validation

The software validates an entered authorization code on the basis of the number of digits dialed and the dialed digits themselves. If the number of digits in the entered authorization code does not match the defined authorization code length (authorization code Data Block, AUB, LD 88), the

Copyright © 2003-2010 Nortel Networks. All Rights Reserved.

authorization code is deemed invalid. Similarly, if the dialed authorization code digits are not defined in the authorization code table (AUT, LD 88), the authorization code is deemed invalid.

When an invalid authorization code is encountered, no response is given to the user until the End-of-Dialing (EOD) timer expires. (This increases the security of authorization codes by making it difficult for an unauthorized user to determine the length of a valid authorization code.) When the EOD timer expires, overflow tone is given for 15 seconds and the call is forcibly disconnected.

Station Specific Authcode (SSAU)

SSAU (package 229) enables the system administrator to define the authorization code access level for each telephone. This feature applies to 500/2500 and digital telephones and is implemented on a per telephone basis. It does not apply to Basic Rate Interface (BRI) telephones.

SSAU provides three levels of authorization code access:

1. AUThcode Unrestricted (AUTU)
   A telephone configured as AUTU has no authorization code access limitations.
2. AUThcode Restricted (AUTR)
   A telephone configured as AUTR can enter up to six assigned authorization codes. (The same authorization code can be assigned to more than one AUTR telephone.)
3. AUThcode Denied (AUTD)
   A telephone configured as AUTD has no access to authorization codes. Any authorization code entered is rejected, and the call is not completed.

Operating parameters

The same authorization code can be assigned to more than one AUTR telephone.

There is crosschecking between LD 10 and LD 11, which define a station specific authorization code, and LD 88, which ensures that the user has entered a valid authorization code.

LD 88, which deletes an existing authorization code, does not check if the authorization code is assigned as a station specific authorization code before the deletion.

Attendant Administration does not support the assignment of Station Specific Authcode.

Copyright © 2003-2010 Nortel Networks. All Rights Reserved.

Feature operation

After an authorization code is entered, the Station Specific Authcode feature determines if the telephone is allowed to use the entered code. If the authorization code is not allowed on that telephone, the existing invalid authorization code treatment occurs. Otherwise, normal authorization code processing occurs.

Authcode security enhancements

The Authorization Code Security Enhancements feature enables a user to temporarily override the access restrictions assigned to a station or trunk because of their assigned Network Class of Service (NCOS), Class of Service (COS), and Trunk Group Access Restrictions (TGAR) codes. If a user requires access to system facilities in addition to that allowed on the set, the Authcode feature can be used to provide them.

The Authorization Code (Authcode) Alarm feature alerts the technician when an invalid Authcode is entered by generating an Authcode Alarm. The Alarm indicates to the technician that some unauthorized person might be trying to use an Authcode to illegally access the switch.

The Authcode alarm is generated upon detection of violation of all Authcode related features (that is, Basic Network, and Station Specific Authorization code features), except for calls originated by the attendant.

A new class of alarm is added (Security Administration - SECA) to distinguish security violations from other types of system messages. The message SECA0001 is printed on the TTY.

Operating parameters

This feature is enabled through the Authcode data block in LD 88.

The Authcode Alarm feature does not apply to calls originated by an attendant.

All existing operating parameters relating to Authorization Code usage apply to this feature.

All existing operating parameters relating to Fault Management apply to this feature.

For security reasons, the SECA0001 alarm should not be configured in the Exception Filter table.

Feature interactions

Authorization code features A Security Administration (SECA) message is printed to the configured Maintenance Terminal (MTC), Filtered Alarm Output (FIL) console and/or the configured History File

Copyright © 2003-2010 Nortel Networks. All Rights Reserved.

when an invalid Authcode is detected. The following features relate to Authorization Codes and are thus impacted: Basic Authorization Codes; Network Authorization Codes; Authcode Conditionally Last; Direct Inward System Access with Authorization Code; Station Specific Authcode; Speed Call/Autodial with Authorization Codes; Call Forward with Authorization Codes; Scheduled Access Restrictions with Authorization Codes; Coordinated Dialing Plan with Authorization Codes; and Flexible Feature Code with Authorization Codes.

Direct private network access with authorization code retry Only when an Authcode retry fails, a SECA message is printed to the configured MTC, FIL console and/or the configured History File.

Feature packaging

This feature is part of base system software.

The following software packages are optional, but may be needed depending upon the application:

- System Alarm Filter (ALRM_FILTER) package 243
- Basic Authorization Code (BAUT) package 25
- Basic Alternate Route Selection (BARS) package 57
- Network Alternate Route Selection (NARS) package 58
- Coordinated Dialing Plan (CDP) package 59
- Direct Private Network Access (DPNA) package 250
- Direct Inward system Access (DISA) package 22
- Network Class of Service (NCOS) package 32
- Network Authorization Code (NAUT) package 63
- Station Specific Authcodes (SSAU) package 229
- Recorded Announcement (RAN) package 7
- Scheduled Access Restrictions (SAR) package 162, and
- System Speed Call (SSC) package 34, or Network Speed Call (NSC) package 39

Feature implementation

Table 46
LD 88: Configure the Authcode alarm for each customer

Prompt	Response	Description
REQ	NEW CHG	Configure or change.

Copyright © 2003-2010 Nortel Networks. All Rights Reserved.

Table 46
LD 88: Configure the Authcode alarm for each customer (cont'd.)

Prompt	Response	Description
TYPE	AUB	Authcode Data Block.
CUST	xx	Customer number as defined in LD 15.
SPWD	xxx	Secure data password.
ALEN	1-14	Number of digits in Authcode.
ACDR	(NO) YES	(Do not) activate Call Detail Recording (CDR) for authcodes.
AUTHCOD_ALRM	(OFF) ON	(Disable) enable Authcode Alarm.

LD 17 – Configure the Alarm Filter table as per existing configuration procedures. The Authcode alarm must be configured in this table in order for the messages to be displayed on the FIL TTY.

Feature operation

No specific operating instructions are required to use this feature.

Collect call blocking (Brazil)

In Brazil, an automatic long distance collect call service (DDC) is available. The Collect Call Blocking (CCB) feature enables a system administrator to block DDC calls on incoming Direct Inward dialing (DID) and Public Exchange/Control Office trunks (analog or DT12).

Under the following conditions, the system sends a special answer signal to the Central Office that collect calls cannot be accepted:

- The Collect Call Blocking (CCB) package 290 is enabled.
- The incoming route has CCB enabled through the CCB prompt in the Route Data Block (RDB).
- The call is answered by a CCB user (that is, Collect Call Blocking Allowed Class of Service or option).

New Classes of Service and prompts are introduced to inhibit specific users from receiving collect DID and CO calls. These can be configured for the following:

- Circuit switched network and BCS through the Collect Call Blocking Allowed/Denied (CCBA/CCBD) Class of Service.
- Attendant and Network Alternate Route Selection calls on a per customer basis through CCBA/CCBD option.
- Automatic Call Distribution (ACD) queues through the CCBA prompt.
- Direct Inward System Access (DISA) through the CCBA prompt.

Copyright © 2003-2010 Nortel Networks. All Rights Reserved.

- Tandem calls dialed with CDP (Trunk Steering Code, Distant Steering Code) through the CCBA prompt.
- Tandem non-CDP calls through the CCBA prompt in the RDB from the outgoing trunk route.

The system sends the CCB answer signal in place of the regular signal for incoming DID/CO calls from routes with CCB enabled, when a call is answered by a CCB user. If the call is a collect call, the CO disconnects the call.

Operating parameters

The CCB Blocking feature supports both analog and DT12 trunks, and the following Intelligent Peripheral Equipment (IPE) cards:

- The NTCK 16BB Extended Flexible COT Trunk Card (XFCOT) with firmware flash timing.
- The NT8D14BA Enhanced Extended Universal Trunk Card (EXUT) containing the Centrex Switchhook Flash function in the firmware.
- The NT8K14AK Extended Universal Trunk Card (XUT) which can be used if the Centrex Switchhook Flash is configured with software timing.

The CCB answer signal can only be sent in cases where answer supervision is provided by the system.

Once the modified answer signal is sent to the CO, the system has no control over how the CO handles the call.

If a CCB user answers a call from a CO/DID route with Collect Call Blocking activated, the CCB answer signal is sent to the CO for all incoming DID and CO calls. For analog trunks, the user experiences a clicking sound on the line and a temporary break is speechpath (0.5 to 2.5 seconds) while the CCB answer signal is being sent.

If the XFCOT and EXUT cards do not have flexible firmware timing, the CCB flash portion of the CCB answer signal is returned to the CO. However, software controlled signaling can be done with EXUT cards.

In a standalone environment, all input from a telephone (except from the Release key) is ignored while the Collect Call Blocking answer signal is being sent.

Collect Call Blocking is applied to attendants on a customer basis only; it cannot be applied on a tenant basis.

Copyright © 2003-2010 Nortel Networks. All Rights Reserved.

The answer signal returned for a call from a route with CCB enabled and, that is Network Attendant Service (NAS) routed, is determined by the customer option on the source node. Thus, NAS routing can be configured across any Meridian Customer Defined Network environment, and the source node determines the answer supervision sent to the CO.

CDR record timing begins on the first answer of the CCB answer sequence. For this reason, CDR records are generated for incoming calls to CCB users across routes on which CCB is enabled. If the call is collect, and is dropped, a CDR record of approximately CCB1 + CCB2 length are generated.

All data calls are answered with the CCB answer signal if CCB is enabled. This can have an effect on data protocols while CCB signaling is taking place.

If firmware timing is used (FWTM = YES in LD 14) for sending the CCB flash, the CCB2 timer is downloaded to the card before sending the firmware flash. If the CCB2 timer is changed in the RDB, either the card has to be enabled or the switch has to be initialized to get the new CCB2 timer downloaded to the card.

Feature interactions

Automatic Answerback (AAB) The Automatic Answerback (AAB) feature, when assigned to a BCS set, allows any incoming call to be answered automatically. If an incoming DID or CO call terminates on a telephone with the AAB feature enabled, the call is automatically answered after one ring. If the telephone has a CCBA Class of Service, the CCB answer signal is provided in the place of the regular answer signal.

Automatic Call Distribution (ACD) Collect Call Blocking can be enabled on an ACD queue basis. Hence, if an incoming CO or DID call is answered by an ACD agent, the answer supervision signal that is returned to the CO is determined by the value of the CCBA prompt in LD 23. While the CCB answer signal is being sent, the same limitations apply to ACD as apply to sets with CCBA Class of Service.

Automatic Call Distribution (ACD) interflow If an ACD call from a route with CCB enabled is diverted to an interflow Directory Number (DN), and answer supervision has not already been provided, the answer signal returned to the CO depends on the source ACD queue. The CCB answer signal is returned to the CO if the source ACD queue has CCB enabled.

ACD night call forward If an ACD call from a route with CCB enabled is diverted to a Night Call Forward DN, and answer supervision has not already been provided, the answer supervision signal returned to the CO

Copyright © 2003-2010 Nortel Networks. All Rights Reserved.

depends on the source ACD queue. The CCB answer signal is returned to the CO if the source ACD queue has CCB enabled.

ACD night RAN route announcement If an ACD call from a route with CCB enabled is diverted to a Night RAN route (defined by NRRT in the ACD block), the CCB signal returned to the CO depends on the source ACD queue. If the source ACD queue has CCB enabled, the CCB answer signal is sent to the CO.

Autoterminate If an incoming DID or CO call from an autoterminate trunk terminates on a telephone or ACD queue with a CCBA Class of Service, the CCB answer signal is provided in place of the regular answer signal.

Basic Rate Interface (BRI) sets

For BRI sets, CCBA/CCBD Class of Service (COS) cannot be programmed. Therefore, it is not possible to prevent BRI sets from accepting DDC collect calls.

Central Answering Position (CAP) The answer signal returned to the CO for calls that get answered by a Central Answering Position (CAP) is determined by the source ACD configuration and not the customer option (CCBA/CCBD in LD 15) on the source node.

Centralized attendant service The answer signal returned to the CO for calls that get answered by a Centralized Attendant Service is determined by the customer option (CCBA/CCDB in LD 15) on the source node.

Centrex switchhook flash A Centrex Switchhook Flash cannot be invoked by another feature while the CCB answer signal is being sent.

Enhanced Malicious Call Trace (MCT) If a station activates Malicious Call Trace (MCT) while the CCB answer signal is being sent, MCT activation is ignored. This also applies to the case when MCT is activated from a remote node.

Meridian Mail Because Meridian Mail is configured using ACD queues, the same interactions exist as in the ACD case. When Meridian Mail sends a call answer message to the system, the CCB configuration in the source ACD queue is used to determine if a CCB answer signal should be sent to the Central Office. All mail boxes using the same ACD queue to access Meridian Mail get the same CCB treatment.

Copyright © 2003-2010 Nortel Networks. All Rights Reserved.

If some of the mail boxes are allowed to receive collect calls, this can be a problem. A possible solution is to configure two ACD queues on the system to access Meridian Mail. One queue would have collect calls allowed (that is, CCBA = NO) and the second queue would have collect calls denied (that is, CCBA = YES).

Network Automatic Call Distribution (ACD) The answer signal returned to the CO for a network ACD call from a route with CCB enabled is determined by the source ACD queue. If the source ACD queue has CCB enabled, the CCB answer signal is returned in place of the regular answer signal.

Pilot DN If an incoming DID or CO call has CCB enabled and is routed to a pilot DN, the answer signal returned to the CO is determined by the CCB configuration of the terminating station.

Private line service If an incoming DID or CO call from a private line trunk terminates on a telephone with a CCBA Class of Service, the CCB answer signal is provided in place of the regular answer signal.

Recorded Announcement (RAN) A RAN route is defined as having CCBA YES or NO, which is used if Coordinated CDP or ACD queues were not used to get to the RAN route. If the call is routed through ACD/CDP to terminate on RAN, the CCB treatment depends upon the CCB data of the ACD/CDP, and not the RAN route.

Tandem to unsupervised trunk If an incoming DID or CO call tandems to an unsupervised trunk before it terminates, the answer signal is sent by timeout. Therefore, any CCB tandem calls made to unsupervised trunks do not have the CCB answer signal sent until the timeout occurs.

Trunk Hook Flash (THF) If a station activates THF while the CCB answer signal is being sent, THF activation is ignored.

Feature packaging

Collect Call Blocking (CCB) package 290 must be provisioned to activate this feature.

Feature implementation

Table 47
LD 16: Enable collect call blocking on a route and configure timers

Prompt	Response	Description
REQ	NEW CHG	Add, or change.
TYPE	RDB	Route Data Block.
CUST	xx	Customer number as defined in LD 15.

Copyright © 2003-2010 Nortel Networks. All Rights Reserved.

Table 47
LD 16: Enable collect call blocking on a route and configure timers (cont'd.)

Prompt	Response	Description
ROUT	0-511	Route Number. Range for Large System and CS 1000E system.
	0-127	Range for Meridian 1 Small System, Media Gateway 1000B, and Media Gateway 1000T.
TKTP	aaa	Trunk type. Must be COT,DID,FEX, or WAT for CCB.
...		
M911_ANI	NO	M911 route. Must be set to NO to enable CCB.
ISDN	NO	ISDN route. Must be set to NO to enable CCB.
...		
ICOD	IAO	Incoming and outgoing.
	ICT	Incoming.
	OGT	Outgoing.
		Must be either IAO or ICT to enable CCB.
		Must be either IAO or OGT to get the CCBA prompt for outgoing calls.
...		
CNTL	(NO) YES	Collect Call Blocking enabled or disabled on incoming route. CCB package 290 is required. Enter YES to obtain CCB timer prompts.
CCB1	512-(1536)-4992	Collect Call Blocking delay timer 1 in milliseconds. Input rounded to the next multiple of 128 milliseconds.
CCB2	500-(1520)-2550	Collect Call Blocking delay timer 2 in milliseconds. Input rounded to the next multiple of 10 milliseconds. If any CCB route members (trunks) are using firmware timing (FWTM = YES in LD 14), changes to the CCB2 timer value does not take effect until the new timer value is downloaded to the card. This can be done by enabling the card or initializing the switch.
CCBA	(NO) YES	Collect Call Blocking allowed or denied for outgoing route.

Copyright © 2003-2010 Nortel Networks. All Rights Reserved.

Table 48
LD 14: Set up firmware timing for XFCOT and EXUT cards

Prompt	Response	Description
REQ	NEW CHG	Add, or change.
TYPE	DID COT FEX WAT	Trunk Type.
TN	l s c u	Terminal Number. Format for Large System and CS 1000E system, where l = loop, s = shelf, c = card, u = unit.
	c u	Format for Meridian 1 Small System, Media Gateway 1000B, and Media Gateway 1000T, where c = card and u = unit.
XTRK	ECUT XCOT	Type of card.
FWTM	(NO) YES	Firmware timing for flash. Enter YES to enable firmware timing.
CUST	xx	Customer number as defined in LD 15.
RTMB	xxx xxx	Trunk route and member number.
SUPN	YES	Answer supervision required.

Table 49
LD 15: Add or change collect call blocking for attendants

Prompt	Response	Description
REQ	NEW CHG	Add, or change.
TYPE	CDB	Customer Data Block.
CUST	xx	Customer number as defined in LD 15.
...		
CAS	(NO) YES	Centralized Attendant Service.
OPT	(CCBD) CCBA	(Deny) allow Collect Call Blocking.

Table 50
LD 10: Add or change collect call blocking for circuit switched network sets

Prompt	Response	Description
REQ	NEW CHG	Add, or change.
TYPE	500	Telephone type.
TN	l s c u	Terminal Number. Format for Large System and CS 1000E system, where l = loop, s = shelf, c = card, u = unit.
	c u	Format for Meridian 1 Small System, Media Gateway 1000B, and Media Gateway 1000T, where c = card and u = unit.

Copyright © 2003-2010 Nortel Networks. All Rights Reserved.

Table 50
LD 10: Add or change collect call blocking for circuit switched network sets (cont'd.)

Prompt	Response	Description
...		
CLS	(CCBD) CCBA	(Deny) allow Collect Call Blocking.

Table 51
LD 11: Add or change collect call blocking for BCS sets

Prompt	Response	Description
REQ	NEW CHG	Add, or change.
TYPE	aaaa	Telephone type, where: aaaa = SL1, 2006, 2008, 2009, 2016, 2018, 2112, 2216. 2317, 2616, or 3000.
TN	l s c u	Terminal Number. Format for Large System and CS 1000E system, where l = loop, s = shelf, c = card, u = unit.
	c u	Format for Meridian 1 Small System, Media Gateway 1000B, and Media Gateway 1000T, where c = card and u = unit.
...		
CLS	(CCBD) CCBA	(Deny) allow Collect Call Blocking.

Table 52
LD 23: Enable collect call blocking on ACD queues

Prompt	Response	Description
REQ	NEW CHG	Add, or change.
TYPE	ACD	ACD data block.
CUST	xx	Customer number as defined in LD 15.
ACDN	xxxx	ACD Directory Number.
...		
CCBA	(NO) YES	(Deny) allow Collect Call Blocking.

Table 53
LD 24: Enable collect call blocking on DISA blocks

Prompt	Response	Description
REQ	NEW CHG	Add, or change.
TYPE	DIS	DISA data block.
CUST	xx	Customer number as defined in LD 15.
...		
DN	xxxxxxx	DISA Director Number.

Copyright © 2003-2010 Nortel Networks. All Rights Reserved.

Table 53
LD 24: Enable collect call blocking on DISA blocks (cont'd.)

Prompt	Response	Description
...		
CCBA	(NO) YES	(Deny) allow CCB answer signal to be sent.

Table 54
LD 87: Enable collect call blocking on CDP steering codes

Prompt	Response	Description
REQ	NEW CHG	Add, or change.
CUST	xx	Customer number as defined in LD 15.
FEAT	CDP	Coordinated Dialing Plan.
TYPE	TSC DSC	Steering code type.
...		
CCBA	(NO) YES	(Deny) allow CCB answer signal to be sent.

Feature operation

No specific operating instructions are required to use this feature.

Direct private network access

The Direct Private Network Access feature provides enhancements to the processing of DISA and Authcode last request calls. This feature complements existing system capabilities to provide an arrangement suitable for long distance resellers. Typically, subscribers to these resellers' services dial in through a DISA port and require some automated digit manipulation, recorded announcements and Authcodes for billing purposes. This feature offers the following capabilities:

DISA digit insertion

Once a DISA Directory Number (DN) is accessed, the system automatically inserts from 1 to 31 digits to save the caller from having to manually enter these digits. Dial tone is provided if the system expects to receive more digits from the caller in order to complete the call. If no additional digits are required, the call terminates automatically.

DISA Recorded Announcement (RAN)

A caller might be greeted with a Recorded Announcement once a DISA DN is accessed. The caller can begin dialing anytime during the greeting, in which case the greeting is stopped and the call is processed. If the Recorded Announcement finishes, dial tone is provided if more digits are expected from the caller to complete the call. As with the case of DISA Digit Insertion, the call terminates automatically if no additional digits are required.

Copyright © 2003-2010 Nortel Networks. All Rights Reserved.

Authcode last retry

For an Authcode last request call, if a caller enters an authorization code (Authcode) that is invalid, the caller is prompted to enter an Authcode again. The reprompt for the Authcode takes the form of either an Authcode Last Request dial tone or a RAN before the Authcode Last Request dial tone.

If configured, the RAN indicates to the caller that a wrong Authcode is entered. While RAN is being given, all dialed digits are ignored.

If a caller realizes they have misdialed, an octothorpe (#) can be pressed which allows the user to immediately reenter the Authcode. If an invalid Authcode is entered for a second time, the existing invalid Authcode treatment results.

Operating parameters

DISA Digit Insertion, DISA RAN, and Authcode Last Retry can be activated individually or can be combined to work in conjunction with one another.

ISA Digit Insertion and DISA RAN can be optionally assigned on a per DISA basis in LD 24, and are only applicable to DISA calls.

Authcode Last Retry can be optionally assigned on a per customer basis in LD 88, and is applicable to all call types supporting Authcode Last.

All existing DISA limitations apply to the DISA Digit Insertion and DISA RAN functionalities.

All existing RAN limitations apply to the DISA RAN and Authcode Last Retry functionality.

All existing Authcode Last limitations apply to the Authcode Last Retry functionality.

To support DISA RAN and the Authcode Last Retry RAN function, the system must be equipped with all the necessary RAN hardware.

Feature interactions

Attendant console operation

Authcode Last Retry Not Configured

If an invalid Authcode is entered by an attendant, overflow tone is given as soon as a sufficient number of Authcode digits is entered. If the attendant enters some digits from an Authcode that is less than the number of digits defined in LD 88, silence is heard.

Authcode Last Retry Configured

Copyright © 2003-2010 Nortel Networks. All Rights Reserved.

If the caller is an attendant and the Authcode entered is invalid, once a sufficient number of digits is entered, the Authcode Last Request dial tone is immediately given to reprompt for the Authcode. If the attendant enters some digits for an Authcode that is less than the number of digits defined in LD 88, silence is heard. Since there is no interdigit timeout for an Attendant Console, no Authcode Last Request dial tone is given for retry.

Authcode Last Request tone is heard immediately prompting for Authcode Retry if the attendant enters some digits and an octothorpe "#".

Autodial If Autodial is programmed with a valid Authcode for Authcode Last followed by an octothorpe "#", the existing Authcode Last operation rejects the Authcode as an invalid Authcode. If Authcode Last Retry is defined, the caller is reprompted for the Authcode.

Call Detail Recording (CDR) Digits inserted by DISA Digit Insertion are reflected in the CDR record.

When a caller is reprompted for an Authcode due to Authcode Last Retry, and a new Authcode is entered, the second Authcode overwrites the first entry. Therefore, the CDR record only reflects the last Authcode entered.

Pretranslation Digits automatically inserted by DISA Digit Insertion are pretranslated during call processing in the same manner as if the caller had manually dialed the digits.

Speed call If a Speed Call entry is programmed with a valid Authcode for Authcode Last followed by an octothorpe "#", the existing Authcode Last operation rejects the Authcode as an invalid Authcode. If Authcode Last Retry is defined, the caller is reprompted for the Authcode.

Feature packaging

This feature is packaged under Direct Private Network Access (DPNA) package 250.

DISA Digit Insertion requires the following additional package:

- Direct Inward system Access (DISA) package 22

DUSA RAN requires the following additional packages:

- Direct Inward system Access (DISA) package 22, and
- Recorded Announcement (RAN) package 7.

Authcode Last Retry requires the following additional packages:

Copyright © 2003-2010 Nortel Networks. All Rights Reserved.

- Basic Authorization Code (BAUT) package 25
- Network Authorization Code (NAUT) package 63, and
- Recorded Announcement (RAN) package 7 when an Authcode Last Retry RAN is required.

Feature implementation

DISA DN data Configure RAN routes (LD 16) and RAN trunks (LD 14) as per existing procedures.

Table 55
LD 24: Respond as follows

Prompt	Response	Description
REQ	NEW CHG	New, or change.
TYPE	DIS	DISA data.
CUST	xx	Customer number as defined in LD 15.
...		
RANR	0-511	RAN route number for "Authcode Last" prompt (NAUT) Range for Large System and CS 1000E system.
	0-127	Range for Meridian 1 Small System, Media Gateway 1000B, and Media Gateway 1000T.
-RTMR	10-300	The maximum amount of time (in seconds) that a caller can wait for an available RAN trunk before being removed from the RAN queue and proceeding as if DISA RAN is completed.
	(0)	Removes and deactivates the timer.
DGTS	x...x	Digits for DISA Digit Insertion. Up to 31 digits can be defined.
	(X)	Removes and deactivates DISA Digit Insertion.
-DLTN	(YES)	Dial tone needed after digit insertion.
	NO	Dial tone not needed after digit insertion.

Authcode Data Configure RAN routes (LD16) and RAN trunks (LD 14) as per existing procedures.

Table 56
LD 88: Respond to the following prompts

Prompt	Response	Description
REQ	NEW CHG	New, or change.
TYPE	AUB	Authcode data.

Copyright © 2003-2010 Nortel Networks. All Rights Reserved.

Table 56
LD 88: Respond to the following prompts (cont'd.)

Prompt	Response	Description
CUST	xx	Customer number as defined in LD 15.
...		
RANR	0-511	RAN route number for "Authcode Last" prompt (NAUT) Range for Large System and CS 1000E system.
	0-127	Range for Meridian 1 Small System, Media Gateway 1000B, and Media Gateway 1000T.
RTRY	(NO)	Disable Authcode Last Retry.
	YES	Enable Authcode Last Retry.
-RAN2	0-511	Route number for Authcode Last Retry RAN. Range for Large System and CS 1000E system.
	0-127	Range for Meridian 1 Small System, Media Gateway 1000B, and Media Gateway 1000T.
CLAS	xxx	Class code value assigned to Authcode.

Feature operation

Table 57
Operational sequence of a DISA call

Step	User Action	Result
1.	Dials DISA DN.	If DISA Security Access Code is required, special dial tone is given, and the caller continues to Step 2. Otherwise the caller skips to Step 3.
2.	Enters the Security Access Code	The dial tone is removed as soon as the first digit is dialed. If the security access code entered is valid, the caller continues to Step 3. Otherwise, the existing treatment for invalid Security Access code is given when the interdigit timer expires.
3.	<no user action>	If Authcode is required, normal dial tone is given, and the caller continues to Step 4. Otherwise, the caller skips to Step 5.
4	Enters an Authcode.	The dial tone is removed as soon as the first digit is dialed. If the Authcode entered is valid, the caller continues to Step 5. Otherwise, the existing invalid Authcode treatment is given when the interdigit timers times out.
5.	<no user action>	If DISA Digit Insertion is not configured, the caller immediately continues to Step 6. Otherwise, the digits defined for DISA Digit Insertion are automatically inserted into the call register before the caller continues to Step 6.
6.	<no user action>	If DISA RAN is configured, a RAN greeting is provided, and the caller continues to Step 7. Otherwise, the caller skips to Step 8.

Copyright © 2003-2010 Nortel Networks. All Rights Reserved.

Table 57
Operational sequence of a DISA call (cont'd.)

Step	User Action	Result
7.	a) The caller listens to the RAN greeting; or	a) If DISA Digit Insertion is not defined, or DISA Digit Insertion specifies to give dial tone to prompt the caller to enter more digits, the caller continues to Step 8. Otherwise, the inserted digits are immediately processed for call completion.
	b) begins dialing before the RAN is finished	b) The RAN greeting is stopped as soon as the first digit is dialed. The dialed digits are appended into the call register (that is, if DISA Digit Insertion is defined, the dialed digits are stored after the inserted digits), and the call is processed for call completion.
8.	<no user action>	Dial tone is given and the caller continues to Step 9.
9.	Dials digits to originate the call	Dial tone is removed as soon as the first digit is dialed. The dialed digits are appended into the call register (that is, if DISA Digit Insertion is defined, the dialed digits are stored after the inserted digits), and the call is processed for call completion.

Table 58
Operational sequence of Authcode last

Step	User Action	Result
1	Makes an outgoing call that requires Authcode Lase.	Authcode Last Request dial tone is given. If Authcode Last RAN is defined, RAN precedes the dial tone. The caller continues to Step 2.
2.	Dials one of the following	The Authcode Last Request dial tone is removed as soon as the first digit is dialed. Then depending on the digit input, one of the following occurs:
	a) A valid Authcode.	a) The call is processed for call termination.
	b) An invalid Authcode followed by "#"	b) If Authcode Last Retry is defined, Authcode Last Request dial tone is immediately given (if Authcode Last Retry RAN is defined RAN precedes the dial tone), and the caller continues to Step 3.
		If Authcode Last Retry is not defined, when the interdigit timer expires the existing invalid Authcode treatment is given.
	c) An invalid Authcode	c) If Authcode Last Retry is defined:
		• If the caller is an attendant, Authcode Last Request dial tone is immediately given (if Authcode Last Retry RAN is defined RAN precedes the dial tone), and the caller continues to Step 3.
		• If the caller is not an attendant, when the interdigit timer expires Authcode Last Request dial tone is again given (if Authcode Last Retry RAN is defined RAN precedes the dial tone), and the caller continues to Step 3.

Copyright © 2003-2010 Nortel Networks. All Rights Reserved.

Table 58
Operational sequence of Authcode last (cont'd.)

Step	User Action	Result
		If Authcode Last Retry is not defined, when the interdigit timer times out the existing invalid Authcode treatment is given.
3	dials one of the following	The Authcode Last Request dial tone is removed as soon as the first digit is dialed. Then depending on the digit input, one of the following occurs:
	a) A valid Authcode	a) The call is processed for call termination.
	b) An invalid Authcode followed by "#"	b) When the interdigit timer times out, the existing invalid Authcode treatment is given.
	c) An invalid Authcode.	c) When the interdigit timer times out, the existing invalid Authcode treatment is given.

Electronic lock network wide/electronic lock on private lines

The basic Electronic Lock feature is enhanced to provide the following capabilities:

- The feature can be implemented network wide.
- A new Class of Service, Controlled Network Class of Service (CNCS) can be selected in the Customer Data Block (LD 15).
- Locking can be implemented for Private DNs.

In a Meridian Customer Defined Network (MCDN) environment, Electronic Lock Network Wide can be used to change the Class of Service of a telephone in a remote location. Electronic Lock Network Wide is activated or deactivated from any node by dialing the electronic Lock Flexible Feature Code (FFC), a password, a location code, and the DN of the telephone to be changed. Since the password length defined at the destination node is not known at the originating node, the Station Control Password (SCPW) length (defined in LD 15) must be defined the same for all network nodes.

If the originating node has the FFC Confirmation Tone option selected, a confirmation tone is given when the feature is successfully activated or deactivated. Overflow tone is given if the operation is unsuccessful. There is no FFC verify code for Electronic Lock.

When a locked telephone makes an outgoing trunk call, if Controlled Network Class of Service is defined, the NCOS defined by CNCS is used instead of the NCOS defined in LD 10 or LD 11 for the telephone. If network signaling is configured for the trunk that normally transmits the NCOS of the telephone between electronic Switched Network (ESN)

Copyright © 2003-2010 Nortel Networks. All Rights Reserved.

nodes, the CNCS is transmitted instead of the NCOS. This prevents a locked telephone from reaching the exchange network by tandeming through a TIE Trunk using ESN.

A new prompt (PELK) is introduced in the Customer Data Block to implement electronic Lock on private lines. If this option is enabled, an outgoing call on a private line of a locked telephone is subject to the same restrictions as all other DNs on the telephone. The same intercept treatment would be given as for a regular DN. The restrictions for private lines, as well as other DN keys on the set, are controlled by the Controlled Class of Service (CCOS), and by the CNCS if defined. Therefore, for outgoing calls, the Class of Service restrictions and/or New Flexible Code Restriction (NFCR) apply to private line keys on locked sets. Only outgoing calls are affected. The Class of Service of anon-locked telephone has no affect on private lines.

Operating parameters

The Network Dialing Plan must be either a CDP or a Uniform Dialing Plan (UDP).

The set password lengths must be equal for all nodes in the network.

Network wide operation is only supported through an MCDN ISDN network.

The Electronic Lock feature must be equipped on both originating and remote nodes.

The FFC used is defined on the node from which Network Electronic Lock is being activated. To activate or deactivate Network Electronic Lock from any remote node, the user has to use the FFC Electronic Lock Activate (ELKA) or Electronic Lock Deactivate (ELKD) code defined on that remote node.

ISDN BRI sets cannot be used to lock another set, nor can they be locked themselves.

A circuit switched network (2500/500) telephone with a private line DN or a BCS telephone with a private line on the Prime DN cannot be locked.

Copyright © 2003-2010 Nortel Networks. All Rights Reserved.

The following hardware is required:

- Primary Rate Interface—D-channel Handler Interface (DCHI)/Multipurpose Serial Data Link (MSDL) and PRI/PRI12 cards.
- Integrated Services Digital Network Signaling Link (ISL)—DCHI cards and TIE trunks.
- Virtual Network Services (VNS)—DCHI cards and any trunks.

Feature interactions

Automatic Call Distribution (ACD) An ACD telephone cannot be locked.

Call Forward No Answer (CFNA) For Call Forwarding, the COS and NCOS used for the forwarding call can be taken from either the forwarding telephone or from the forwarded set, depending on the option defined in the Customer Data Block.

For example, Telephone B call forwards all calls to an external trunk. Telephone A calls Telephone B. If OPT = CFF in LD 15 (Call Forward forwarded to party's COS and NCOS), the COS and NCOS of Telephone B are used for forwarding the call to the trunk. If OPT = CFO (Call Forward originating party's COS and NCOS), the COS and NCOS of Telephone A are used for forwarding the call to the trunk.

Direct Inward System Access (DISA) The Electronic Lock feature cannot be activated or deactivated when accessing the node through DISA.

Analog Private Network Signalling System (APNSS) Electronic Lock Network Wide is not supported on DPNSS1, DASS2, or APNSS trunks.

Electronic Switched Network Authcode If a station user enters an authcode on the set, regardless of the status of the telephone being locked or not, the NCOS defined for the authcode is used. The ESN Authcode feature overrides the Electronic Lock Network Wide feature.

Flexible numbering plan If a network is equipped with a flexible numbering plan (that is, not all the network DNs are the same length), handing up before the usual end-of-dialing timeout cancels the request for activation or deactivation of Electronic Lock. Dialing an octothorpe (#) after the network DN causes the request for activation or deactivation of the electronic Lock to be sent immediately, instead of waiting for the usual end-of-dialing timeout to send it.

Copyright © 2003-2010 Nortel Networks. All Rights Reserved.

Multiple appearance DN The same locked or unlocked state applies to all Terminal Numbers with the same primary DN and the same SCPW. Terminal Numbers with the same DN, but not having the same SCPW, cannot be locked or unlocked.

New Flexible Code Restriction (NFCR) With NFCR, toll denied stations are allowed or denied calling privileges according to the Facility Restriction Level (FRL) assigned to the NCOS defined in the protected line block. For a locked set, NCFR uses the FRL assigned to the CNCS to determine its calling privileges if one is defined; if no CNCS is defined, the NCOS of the locked telephone is used.

Scheduled Access Restrictions (SAR)

The SAR feature overrides Electronic Lock.

Virtual Network Services (VNS) Electronic Lock can function in a VNS environment.

Feature packaging

Electronic Lock Network Wide/Electronic Lock on Private Lines is packaged under Flexible Feature Codes (FFC) package 139.

Use of this feature requires the following additional packages:

- Controlled Class of Service (CCOS) package 81
- Network Class of Service (NCOS) package 32
- Integrated Services Digital Network (ISDN) package 145

Feature implementation

Electronic Lock Network Wide/Electronic Lock on Private Lines is configured in the same way as Electronic Lock (currently described in the Flexible Feature Codes module of this document), except for the inclusion of the CNCS prompt in LD 15. In addition, to implement Electronic Lock on Private Lines, prompt PELK must be set to YES.

Table 59
LD 15: Respond to the CNCS prompt as follows

Prompt	Response	Description
REQ:	NEW CHG	New or change.
TYPE:	CDB	Customer Data Block.
CCOS	YES	Change CCOS options.
SPRE	xxxx	Special Prefix number.

Copyright © 2003-2010 Nortel Networks. All Rights Reserved.

Table 59
LD 15: Respond to the CNCS prompt as follows (cont'd.)

Prompt	Response	Description
CCRS	(UNR) CUN CTD TL SRE FRE FR1 FR2	Controlled Class of Service.
CNCS	(X) 0-99	Controlled NCOS.
PELK	(NO) YES	Electronic Lock on Private Lines.
SCPL	(0)-8	Station Control Password length.

Feature operation

Electronic lock network wide An ISDN network is set up connecting Node 1 to Node 2. Telephone A is the Controlling telephone. Telephone B is the telephone to be locked and unlocked by Telephone A. The digits that Telephone A would dial to ring Telephone B are to be in the format of a CDP or UDP dialing plan. This is standard dialing for ISDN features

To lock Telephone B (in Node 1) from Telephone A (in Node 2), the user goes off-hook and dials the electronic Lock Activate (ELKA) FFC defined in the Customer Data Block of Node 1, followed by the Station Password (SCPW) defined for Telephone B, and the digits that Telephone A would normally dial to ring Telephone B (for example, 41 + 9999 + 6-343-3000). If the FFCT option is configured as YES in LD 57 in the Customer Data Block of Node 1, confirmation tone is given to Telephone A to confirm that the lock operation is successful. Telephone B becomes locked if it was previously in an unlocked state.

If Telephone B was already locked, the above operation is ignored and Telephone B remains locked; however, a confirmation tone is provided to verify that the telephone is locked.

If the lock operation was unsuccessful, overflow tone is given.

To unlock Telephone B (in Node 1) from Telephone A (in Node 2), the user goes off-hook and dials the ELKD FFC defined in the Customer Data Block of Node 1, followed by the SCPW defined for Telephone B and the digits that Telephone A would normally dial to ring Telephone B (for example, 42 + 9999 + 6-343-3000). If the FFCT option is configured as YES in LD 57 in the Customer Data Block of Node 1, confirmation tone is given to Telephone A to confirm that the unlock operation is successful. Telephone B becomes unlocked if it is was previously in a locked state.

If Telephone B was already unlocked, the above operation is ignored and Station B remains unlocked; however, a confirmation tone is provided to verify that the telephone is unlocked.

Copyright © 2003-2010 Nortel Networks. All Rights Reserved.

If the unlock operation was unsuccessful, overflow tone is given.

Electronic lock on private lines Feature operation of Electronic Lock for Private Lines is the same as for the basic Electronic Lock feature.

Controlled network class of service No specific operating instructions are required to use Controlled Network Class of Service.

Three-wire analog trunk: Commonwealth of Independent States (CIS)

The Three Wire Analog Trunk - Commonwealth of Independent States (CIS) feature provides the connectivity between the system and the three-wire analog trunks (3WT) used in the CIS. Analog incoming local three-wire trunks, analog incoming toll three-wire trunks, and analog outgoing DID three-wire trunks can be connected to the system.

The following hardware cards are supported:

- Cards supported in an Intelligent Peripheral Equipment (IPE) environment are referred to as X3W cards. They consist of:
  - NT5K60AA for incoming local and toll trunks.
  - NT5K61AA for outgoing trunks.

The following functions are provided by the Three-Wire Analog Trunk – CIS feature:

- Delivery of Automatic Number Identification (ANI) on request from the Public Exchange/Central Office for outgoing 3WT analog calls
- Downloading of specific transmission parameters (that is, pad data, public network toll access code, and hardware ID) for X3W cards, and
- Provision of dial tone internally by the system to the originator of the call after seizure of an outgoing X3W trunk.

The trunk state change validation timing is performed by the 3WT cards. For 2WT trunks, the originating party controls the disconnection of a call. When the originating party goes on-hook, the call is released. Note however, that when MCT is enabled, the Local Exchange might require a two-way release. This two-way release applies only on a telephone.

A 3WT Unproductive Timer is used to prevent a call on a X3W trunk from remaining unanswered for too long. This timer can be set to a maximum of 10 minutes.

Copyright © 2003-2010 Nortel Networks. All Rights Reserved.

For outgoing calls, digits are sent from the main Central Processing Unit (CPU) to the 2WT firmware. This is done by IPE messaging for X3W equipment. The firmware then sends the digits as pulses and controls the actual decadic outpulsing.

Digits for incoming calls are received by the 3WT firmware as pulses. For X3W equipment, the pulses are collected by firmware and complete digits are reported to the CPU as IPE digit messages.

Operating parameters

X3W trunk cards can only be configured on IPE shelves.

Trunk-to-trunk connections are supported, but the ANI information refers to the ANI DN of the incoming route, except with QSIG, Q931, and Digital Private Signaling System #1 (DPNSS1) routes. QSIG, and Q931 ANI information uses the Calling Line Identification (CLID) information, whereas DPNSS1 ANI uses the Originating Line Identifier (OLI) information if this information is present.

The Dynamic Loss Switching feature is not supported, because there is no connection matrix and loss alternative table available for the CID market. However, Dynamic Loss Switching is supported in Australia, New Zealand, Italy, and China.

The static Loss Plan Download (SLPD) feature is supported on X3W trunks.

ANI is only supported for outgoing calls.

The data in ANI is built only once at the beginning of the call. Once the trunk access code is dialed, the ANI information is downloaded to the 3WT firmware. The download of ANI occurs only once and is not changed or redownloaded for any kind of operation during a call; therefore, if the call goes through any type of modification such as a transfer or call forward for instance, the ANI information sent when requested is that of the original originator of the call.

Toll Operator Manual Ringing and Break-In are not supported on IPE analog trunks.

Data calls are supported, but with the limitations due to the 500 Hz ANI requests that can happen any time during the call and the ANI information being sent of the same voice circuit on which the data is being transmitted; therefore, the transmission of data is not guaranteed.

Multi frequency Shuttle signaling is not supported on X3W.

Copyright © 2003-2010 Nortel Networks. All Rights Reserved.

The CIS A-law XCT (NTD17AE) is required.

Feature interactions

Authorization code An extension can, referring to the Authorization Code, seize an outgoing CIS 3WT trunk. The Authorization Code category is used to build the ANI message, meaning that a telephone which has a CIS restricting call category can complete a call to the public network using the Authorization Code.

Dial tone detection Dial Tone detectors are supported with the limitations of the reliability of the tone provided by the Public Exchange.

DPNSS1 gateway The ANI information transmitted for this incoming DPNSS1 route includes the Local Exchange Code (LEC) of the CIS outgoing route, the ANI DN, and the Category Code (CAC) of this incoming route.

The ANI DN information that is built refers to the OLI if present and the Route DN Length prompt for ANI (RDNL 0) in LD 16. If the OLI is available, but RDNL = 0 for that route, the ANI DN is the ANI DN of that incoming route. If the OLI is available, but RDNL = 0 and the ANI DN of the incoming route is not defined, the ANI DN is the ANI DN of the CIS outgoing route. If the OLI is available, but RDNL = 0, and the ANI DN of the incoming route is not defined, and the ANI DN of the CIS outgoing route is not defined, the ANI DN is built with the Additional Digit (ADDG). If RDNL 0, its value is the number of digits extracted from the OLI to be used as the ANI DN. The least significant digit of the OLI is extracted (for example, if the DN is 4201, the 1 is the least significant digit).

If there is no OLI, the ANI DN of the SPNSS1 route is used to build the ANI message. If there is no ANI DN on the DPNSS1 route, the ANI DN of the CIS outgoing route is used to build the ANI message. If there is no ANI DN on the CIS outgoing route, the ANI is built with the ADDGs of the CIS route (ADDG is always defined).

Incoming digit conversion The construction of an ANI message does not care if Incoming Digits Conversion is used. The DN sent as ANI is the actual DN of the set, not necessarily the DID number of dial to reach the telephone. Therefore, if an external party uses a DN for making a call to the corresponding extension which is delivered in an ANI message, the call can fail.

Multiple appearance DNs Since the ANI category is defined on a per telephone basis, two stations with the same multiple Appearance DN can be assigned different ANI categories.

Copyright © 2003-2010 Nortel Networks. All Rights Reserved.

Q931 gateway/BR1 gateway The ANI information transmitted for this incoming Q931 route includes the LEC of the CIS outgoing route, the ANI DN, and the CAC of this incoming route.

The ANI DN information that is built refers to the CLID if present and the Route DN Length prompt for ANI (RDNL 0) in LD 16. If the CLID is available but RDNL = 0 for that route, the ANI DN is the ANI DN of that incoming route. If the CLID is available, but RDNL = 0, and the ANI DN of the incoming route is not defined, the ANI DN is the ANI DN of the CIS outgoing route. If the CLID is available, but RDNL = 0, and the ANI DN of the incoming route is not defined, and the ANI DN of the CIS outgoing route is not defined, the ANI DN builds with the ADDG. If RDNL 0, its value is the number of digits extracted from the CLID to be used as the ANI DN. The least significant digits of the CLID is extracted (for example, if the DN is 4201, the 1 is the least significant digit).

If there is no CLID, the ANI DN of the Q931 route is used to build the ANI message. If there is no ANI DN on the Q931 route, the ANI DN of the CIS outgoing route is used to build the ANI message. If there is no ANI DN on the CIS outgoing route, the ANI is built with the ADDG of the CIS outgoing route (ADDG is always defined).

QSIG gateway The ANI information transmitted for this incoming QSIG route includes the LEC of the CIS outgoing route, the ANI DN, and the CAC of this incoming route.

The ANI DN information that is built refers to the CLID if present and the Route DN Length prompt for ANI (RDNL 0) in LD 16. If the CLID is available but RDNL = 0 for that route, the ANI DN is the ANI DN of that incoming route. If the CLID is available, but RDNL = 0, and the ANI DN of the incoming route is not defined, the ANI DN is the ANI DN of the CIS outgoing route. If the CLID is available, but RDNL = 0, and the ANI DN of the incoming route is not defined, and the ANI DN of the CIS outgoing route is not defined, the ANI DN builds with the ADDG. If RDNL 0, its value is the number of digits extracted from the CLID to be used as the ANI DN. The least significant digits of the CLID is extracted (for example, if the DN is 4201, the 1 is the least significant digit).

If there is no CLID, the ANI DN of the QSIG route is used to build the ANI message. If there is no ANI DN on the QSIG route, the ANI DN of the CID outgoing route is used to build the ANI message. If there is no ANI DN of the CIS outgoing route, the ANI is built with the ADDG digits of the CIS outgoing route (ADDG is always defined).

The ANI information transmitted for this incoming QSIG route includes the LEC of the CIS outgoing route, the ANI DN, and the CAC of this incoming route.

Copyright © 2003-2010 Nortel Networks. All Rights Reserved.

R2MFC Calling Number Identification (CNI) The incoming R2MFC Calling Number Identification (CNI) are not tandemed if the call is outgoing to a Commonwealth of Independent States Trunk (CIST). The ANI built is the LEC of the outgoing CIS route, the ANI DN of this R2MFC incoming route if defined (otherwise it is the ANI DN of the outgoing CIS route, or the ADDG digit), and the CAC of the incoming R2MFC route.

The CAC used to build the R2MFC CNI for the analog, digital, and BRI sets is used to build the CIS ANI. R2MFC CAC prompt values are in the range of 0 to 10, and the default is 0. CIS CAC prompt values are in the range of 0 to 9, and the default value is 3.

If the Multi Frequency Compelled (MFC) package is equipped, but not the CIST package, the CAC prompt uses the R2MFC range and default. If the CIST package is equipped (MFC package equipped or not), the CAC prompt uses the CIS range and default.

Virtual network services Virtual Network Services is not supported on CIS trunks.

Feature packaging

The Three-Wire Analog Trunk – CIS feature is contained in Commonwealth of Independent States Trunk Interface (CIST) package 221.

The following packages are also required to implement this feature:

- Flexible Tones and Cadences (FTC) package 125
- International supplementary Features (SUPP) package 131 for DID/DOD
- Flexible Numbering Plan (FNP) package 160
- Trunk Failure Monitor (TFM) package 182
- Extended Peripheral Equipment (XPE) package 203 (only for X3W cards)

Feature implementation

This is an example that describes how the 3WT related features are configured. Only the prompts that are significant for the Three-Wire Analog Trunk - CIS feature are mentioned.

The following features are needed to make the feature work according to this example: B34 Codec Static Loss Plan Downloading; Partial Dial Timer; End-of-Selection Busy; Tone to-Last Party; Special Dial Tones After Dialed Numbers; Trunk Barring, and Special Service List.

Copyright © 2003-2010 Nortel Networks. All Rights Reserved.

Table 60
LD 17: Configure the system data

Prompt	Response	Description
REQ	NEW CHG	Add or Change.
...		
PARM	YES	Change system parameters.
PCML	A	System Pulse Code Modulation companding law. A-law is used to the CIS market.
...		
DTRB	70	Dual-tone Multi frequency burst and interdigit pause for the Tone and Digit Switch. Pulse/Pause Ration 70/70.

Table 61
LD 16: Configure an incoming X3W DID route

Prompt	Response	Description
REQ	NEW CHG	Add, or change.
TYPE	RDB	Route Data Block.
...		
TKTP	DID	Direct Inward Dialing trunk data block.
...		
DTRK	NO	This is not a digital trunk route.
...		
ICOG	ICT	Incoming trunk.
...		
CNTL	YES	Change control or timers.
- TIMR	ICF 0	Incoming flash timer should be set to 0. Validation is performed by 3WT firmware.
- TIMR	OGF 0	Outgoing flash timer should be set to 0. Validation has already been done by 3WT firmware.
- TIMR	EOD 13952	End of dial timer, default value in milliseconds.
- TIME	DSI 11904	Disconnect supervision timer in milliseconds.
- TIMR	DDL 0	Delay Dial Timer not needed.
...		
NEDC	ORG	Near End Disconnect Control. Originating end control.
CDPC	(NO)	The system is not the controlling party on incoming calls.
...		
OPR	(NO)	This is not an outpulsing route.
PRDL	YES	Partial dial timing is equipped using EOD.

Copyright © 2003-2010 Nortel Networks. All Rights Reserved.

Table 61
LD 16: Configure an incoming X3W DID route (cont'd.)

Prompt	Response	Description
EOS	BSY	Busy signal is sent on timeout.
DNSZ	(0)-7	Number of digits expected on DID routes. 0, the default, indicates no fixed value. This value must be defined according to the numbering plan.
...		
BTT	30	Busy Tone Time. Length of Busy/overflow to be returned on DID routes in seconds.
...		
CAC	0-(3)-9	Route ANI category.
ANDN	0-9999999	Route ANI DN.
RDNL	0-(4)-7	Route DN Length for ANI. This is printed for DPNSS1, MCDN, and QSIG routes only.

Table 62
LD 16: Configure an outgoing X3W DID route and define the toll digit using the TDG prompt

Prompt	Response	Description
REQ	NEW CHG	Add, or change.
TYPE	RDB	Route Data Block.
...		
TKTP	DID	Direct Inward Dialing trunk data block.
...		
DTRK	NO	This is not a digital trunk route.
...		
ICOG	OGT	Outgoing trunk.
...		
CNTL	YES	Change control or timers.
- TIMR	ICF 0	Incoming flash timer should be set to 0 in milliseconds. Validation is done by 3WT firmware.
- TIMR	OGF 0	Outgoing flash timer should be set to 0 in milliseconds. Validation is done by 3WT firmware.
- TIMR	EOD 13952	End of dial timer, default value.
- TIMR	DSI 11904	Disconnect supervision timer.
- TIMR	DDL 0	Delay Dial Timer not needed.
- TIMR	GTO 2944	Outgoing guard timer.
...		

Copyright © 2003-2010 Nortel Networks. All Rights Reserved.

Table 62
LD 16: Configure an outgoing X3W DID route and define the toll digit using the TDG prompt (cont'd.)

Prompt	Response	Description
NEDC	ETH	Near End Disconnect Control Either end control.
FEDC	ETH	Far End Disconnect Control Either end control.
...		
NATL	NO	North American Toll scheme.
TDG	8	Toll Digits. List of digits after trunk access code which indicate toll calls.
...		
OPR	(NO)	This is not an outpulsing route.
...		
ADKW	(NO)	Seizure acknowledge signal is not expected.
...		
LEC	0-9999999	Local Exchange Code. A value must be entered.
ADDG	0-(8)-9	Additional digit.
CAC	0-(3)-9	Route ANI category.
ANDN	0-9999999	Route ANI DN.
RDNL	0-(4)-7	Route DN Length for ANI. This is printed for DPNSS1, MCDN, and QSIG routes only.

Table 63
LD 18: Configure the special service list

Prompt	Response	Description
REQ	NEW CHG	Add, or change.
TYPE	SSL	Special Service List data block.
CUST	xx	Customer number as defined in LD 15.
SSL	1-15	List number for Special Service List.
SSDG	xxxx	Special Service Digit or Digits (1 to 4 digits).
...		
- TOLL	YES	The SSDG entry is a toll number.
...		
SSDG	xxxx	Special Service Digit or Digits (1 to 4 digits).
...		
- SSUC	YES	The SSDG entry is a Special Service unanswered call.
SSDG	<CR>	

Copyright © 2003-2010 Nortel Networks. All Rights Reserved.

Table 64
LD 16: Configure an outgoing X3W DID route and define the toll access code using the SSL prompt

Prompt	Response	Description
REQ	NEW CHNG	Add, or change.
TYPE	RDB	Route Data Block.
...		
TKTP	DID	Direct Inward Dialing trunk data block.
...		
DTRK	NO	This is not a digital trunk route.
...		
ICOG	ICT	Incoming trunk.
...		
CNTL	YES	Change control or timers.
- TIMR	ICF 0	Incoming flash timer should be set to 0. Validation has already been done by 3WT firmware.
- TIMR	OGF 0	Outgoing flash timer should be set to 0. Validation has already been done by 3WT firmware.
- TIMR	EOD 13952	End of dial timer, default value.
- TIMR	DSI 11904	Disconnect supervision timer.
- TIMR	DDL 0	Delay Dial Timer not needed.
...		
NEDC	ORG	Near End Disconnect Control Originating end control.
FEDC	ORG	Far End Disconnect Control Originating end control.
CDPC	(NO)	The system is not the controlling party on incoming calls.
...		
OPR	(NO)	This is not an outpulsing route.
PRDL	YES	Partial dial timing is equipped using EOD.
EOS	BSY	End of selection and busy signals enabled.
DNSZ	(0)-7	Number of digits expected on DID routes. 0, the default, indicates no fixed value. This value must be defined according to the numbering plan.
...		
BTT	30	Length of busy/overflow tone to be returned on DID routes in seconds.
...		
CAC	0-(3)-9	Route ANI category.

Copyright © 2003-2010 Nortel Networks. All Rights Reserved.

Table 64
LD 16: Configure an outgoing X3W DID route and define the toll access code using the SSL prompt (cont'd.)

Prompt	Response	Description
ANDN	0-9999999	Route ANI DN.
RDNL	0-(4)-7	Route DN Length for ANI. This is printed for DPNSS1, MCDN, and QSIG routes only.

Table 65
LD 14: Add or change trunk data for X3W incoming DID trunk

Prompt	Response	Description
REQ	NEW CHG	Add, or change.
TYPE	DID	Direct Inward Dial trunk data block.
...		
XTRK	XDID	Extended Trunk Type. IPE DID trunk card.
...		
SIGL	CIS	Trunk Signaling. Three-wire CIS trunk signaling.
CIST	(NO) YES	Prompted only for incoming routes (that is, ICOG = ICT). NO = Local trunk. YES = Toll trunk.
...		
STRI	IMM	Immediate incoming start arrangement.
...		
SUPN	YES	Answer and disconnect supervision required.
CLS	(DIP)	Dial pulse (for 3WT incoming and outgoing).
	(SHL) LOL	Line length used for pad setting.
	(BARD) BARA	Barring (denied) allowed.

Table 66
LD 14: Add or change trunk data for X3W outgoing DID trunk

Prompt	Response	Description
REQ	NEW CHG	Add, or change.
TYPE	DID	Direct Inward Dial trunk data block.
...		
XTRK	XDID	IPE DID trunk card.
...		
SIGL	CIS	Three-wire CIS trunk signaling.
...		

Copyright © 2003-2010 Nortel Networks. All Rights Reserved.

Table 66
LD 14: Add or change trunk data for X3W outgoing DID trunk (cont'd.)

Prompt	Response	Description
STRO	IMM	Immediate outgoing start arrangement.
...		
SUPN	YES	Answer and disconnect supervision required.
CLS	(DIP)	Dial pulse (for 3WT incoming and outgoing).
	(SHL) LOL	Line length used for pad setting.
	(BARD) BARA	Barring (denied) allowed.

Table 67
LD 10: Add or change circuit switched network telephones for CIS

Prompt	Response	Description
REQ	NEW CHG	Add, or change.
TYPE	500	Circuit switched network (500/2500) telephone data block.
...		
CLS	(DNAA) DNAD	DN of telephone (allowed) denied for use in ANI messages.
CAC	0-9	Specifies ANI category for 3WT calls.

Table 68
LD 11: Add or change BSC telephones for CIS

Prompt	Response	Description
REQ	NEW CHG	Add, or change.
TYPE	aaaa	Telephone type
...		
CLS	(DNAA) DNAD	DN of telephone (allowed) denied for use in ANI messages.
CAC	0-9	Specified ANI category for 3WT calls.

Table 69
LD 12: Add or change an attendant console for CIS

Prompt	Response	Description
REQ	NEW CHG	Add, or change.
TYPE	ATT	Console type.
	2250	
....		

Copyright © 2003-2010 Nortel Networks. All Rights Reserved.

Table 69
LD 12: Add or change an attendant console for CIS (cont'd.)

Prompt	Response	Description
CLS	(DNAA) DNAD	DN of telephone (allowed) denied for use in ANI messages.
CAC	0-9	Specifies ANI category for 3WT calls.

Table 70
LD 27: Add or change BRI sets for CIS

Prompt	Response	Description
REQ	NEW CHG	Add, or change.
TYPE	DSL	Digital Subscriber Loop data block.
...		
CLS	(DNAA) DNAD	DN of telephone (allowed) denied for use in ANI messages.
CAC	0-9	Specifies ANI category for 3WT calls.

Table 71
LD 56: Configure dial tone, busy tone, and tone to last party

Prompt	Response	Description
REQ	NEW CHG PRT	Add, change, or print.
TYPE	MCAD	Master Cadence data block.
WACD	30	Cadence number. In this example entry 30 is modified.
CDNC	60 60	On-off phases for cadence.
REQ	NEW CHG PRT	Add, change, or print.
TYPE	FCAD	Firmware Cadence data block.
WACD	30	Cadence number. In this example entry 30 is modified.
CDNC	60 60	On-off phases for cadence. 0.3 second on. 0.3 second off.
END	REPT	Repeating cycles.
- CYCS	1	On/off cycles to be repeated.
- WTON	YES	Define tones associated with the cadence.
- - TONES	158	420 Hz and - 12 dB below overload.
REQ:	NEW CHG PRT	Add, change, or print.
TYPE:	FTC	Flexible Tones and Cadence data block. Used to provide special dial tone after dialed number.
...		

Copyright © 2003-2010 Nortel Networks. All Rights Reserved.

Table 71
LD 56: Configure dial tone, busy tone, and tone to last party (cont'd.)

Prompt	Response	Description
HCCT	YES	Hardware Controlled Cadences and Tones modification of the hardware.
...		
- BUSY		Busy tone.
- - TDSH		
- - XTON	158	420 Hz and - 12 dB below overload.
- - XCAD	30	XCT cadence number. 0.3 seconds on, 0.3 seconds off.
...		
- TLP		Tone to last party.
-- TDSH		
- - XTON	158	420 Hz and - 12 dB below overload.
- - XCAD	30	XCT cadence number. 0.3 seconds on, 0.3 seconds off.
- TLTP	30	Tone to last party timer in seconds.
...		
SRC	YES	Source Tones.
- SRC1		CIS continuous dial tone within the range.
- - TDSH		
- - XTON	158	420 Hz and - 12 dB below overload.
- - XCAD	0	No cadence.
REQ:	NEW CHG PRT	Add, change, or print.
TYPE:	DTAD	Special Dial Tone After Dialed Number data block.
DDGT	9	The digit 9 is to be used as an outgoing local access code.
TONE	SRC1	Tone to be provided after the dialed digit 9.

Table 72
LD 88: Configure the Authcode data block

Prompt	Response	Description
REQ	NEW CHG	Add, or change.
TYPE	AUB	Authcode data block.
...		
CLAS	(0)-115	Classcode value assigned to Authcode (NAUT).

Copyright © 2003-2010 Nortel Networks. All Rights Reserved.

Table 72
LD 88: Configure the Authcode data block (cont'd.)

Prompt	Response	Description
...		
NCOS	(0)-99	Network Class of Service Group number
CAC	0-(3)-9	specifies ANI category for CIS calls.

Table 73
LD 97: Configure the IPE system record for three-wire trunks

Prompt	Response	Description
REQ	CHG	Change.
TYPE	LOSP	Loss Plan Tables. Configure loss parameters for downloading.
...		
TTYP	(STAT)	Install a B34 Static Los Plan Table.
- STYP	(PRED)	A numbered predefined table is to be used.
- - TNUM	2	2 = Austrian Table.
REQ	CHG	Change.
TYPE	LOSP	Loss Plan Tables. Configure loss parameters for downloading.
...		
TTYP	(STAT)	Install a B34 Static Loss Plan Table.
- STYP	CSTM	Customize a numbered predefined table.
PWD2	xxxx	Response CSTM at STYP prompt requires a PWD2 password or a LAPW password with Loss Planning Customizing Allowed (LOSA) access. This prompt appears if the appropriate password has not been given previously.
-DIDS	Rx Tx	Enter loss levels for DID short line.
- DIDL	Rx Tx	Enter loss levels for DID long line.

Feature operation

No specific operating instructions are required to use this feature.

Authorization code administration

Classcodes

With the NAUT and BAUT features, a "classcode" structure is part of authorization code administration. A classcode is a combination of COS, TGAR, and NCOS codes. There can be up to 116 (0–115) classcodes defined through the Authorization Code Data Block (AUB, LD 88),

Copyright © 2003-2010 Nortel Networks. All Rights Reserved.

each with a different combination of COS, TGAR, and NCOS codes. Authorization codes that have the same combination of COS, TGAR, and NCOS codes are assigned the same classcode.

Creating authorization codes

When creating new authorization codes, a classcode associated with the new authorization codes is specified. The new authorization codes are automatically assigned the COS, TGAR, and NCOS codes associated with the specified classcode.

> ***Note:*** The BAUT feature does not support automatic generation of authorization codes. With the NAUT feature, authorization codes can be defined individually by the customer or generated automatically by the Meridian 1.

Exemptcode

When an authorization code is to be removed from use, a facility exists to prevent that authorization code from being reused (that is, the authorization code is not accepted as valid input when individually defining authorization codes). This is accomplished through an "exemptcode." When an authorization code is removed from use, an exemptcode is assigned to the authorization code in place of the classcode. The exemptcode is the month (for example, JAN, FEB) taken from the system clock. If an exemptcode is not requested, the removed authorization code is returned to the pool of unused authorization codes and can be reused at any time.

Default Facility Restriction Level (FRL)

The Route List Block (RLB) program (LD 86) is used to define a minimum Facility Restriction Level (FRL) for each route list. This minimum FRL (range 0-7) is used to determine whether or not to prompt for an authorization code entry after a call. If a minimum FRL is not specified, the actual minimum FRL in the initial route set is used as a default. Similarly, the Route Data Block (RDB) program (LD 16) is used to define whether to prompt for an authorization code entry on calls on incoming or two-way TIE Trunk groups.

Network Authorization Code (NAUT)

The Network Authorization Code (NAUT) feature provides for up to 20,000 authorization codes of 1 to 14 digits.

The NAUT feature incorporates all the features of the BAUT feature, adding two enhancements:

- a "conditionally last" option for entering an authorization code after dialing a NARS, BARS, or CDP call
- allowing the attendant to enter an authorization code

Copyright © 2003-2010 Nortel Networks. All Rights Reserved.

Authorization code conditionally last

With the NAUT feature, users can be prompted "conditionally" for an authorization code after dialing a NARS, BARS, or CDP call. The prompt is by an "authorization code request tone," which consists of 10 bursts of dial tone, followed by steady dial tone. (The authorization code request tone can, optionally, be preceded with an appropriate recorded announcement.) The user is prompted for an authorization code entry only if:

- an authorization code was not previously entered
- the FRL associated with the user's Network Class of Service (NCOS) is less than the service change assigned minimum FRL of the route list that NARS, BARS, or CDP would use for the call

Users at a remote switch (System Main or Conventional Main) connected through TIE Trunks to a system node can (optionally) be prompted for an authorization code entry after dialing a NARS, BARS, or CDP call. The user is prompted for an authorization code entry only if:

- an authorization code was not previously entered
- the FRL associated with the NCOS of the incoming (or two-way) TIE Trunk is less than the minimum FRL of the route list that NARS, BARS, or CDP would use for the call
- the route is defined in the Route Data Block (RDB), LD 16, to prompt for an authorization code entry on incoming NARS, BARS, or CDP calls

Users accessing a system Node through the DISA feature to make a NARS, BARS, or CDP call are prompted for an authorization code entry only if:

- an authorization code was not previously entered
- the FRL of the NCOS assigned to the DISA Directory Number (DN) is less than the minimum FRL of the route list that NARS, BARS, or CDP would use for the call

Attendant input of authorization code

Normally, because an attendant is not restricted from accessing any system resource, there is no need for the attendant to have an authorization code. The Network Authorization Code feature enables the attendant to enter an authorization code for other callers. For example, the attendant can enter an authorization code (after dialing the SPRE and the digit "6") and complete a long distance call for a local station user whose COS is toll denied (TLD). If the CDR of authorization codes is defined for the customer, the local station user's authorization code digits appear in the CDR record for billing purposes.

Copyright © 2003-2010 Nortel Networks. All Rights Reserved.

Attendants are normally assigned an NCOS having a high FRL so that they can make any type of call, including NARS, BARS, or CDP calls. An attendant can, however, be prompted for an authorization code entry if the FRL required to access a route list for a NARS, BARS, or CDP call is greater than the FRL of the attendant's NCOS.

Copyright © 2003-2010 Nortel Networks. All Rights Reserved.

Copyright © 2003-2010 Nortel Networks. All Rights Reserved.

BAUT/NAUT

Contents

This section contains information on the following topics:

"Operating parameters" (page 153)

"Feature interactions" (page 154)

"Packaging" (page 157)

"Feature implementation" (page 157)

"Feature operation" (page 160)

Operating parameters

Users on circuit switched network or Centrex systems connected through TIE trunks to a system Node can use the Authcode conditionally last feature, provided that these systems transmit or repeat all digits dialed by the users in response to the Authcode request. This feature cannot be used by certain systems that operate in senderized mode. Correct operation may require adjustment of End-of-Dialing (EOD) timeout on systems that employ simulated cut-through operation.

In a private network consisting of multiple switches equipped with the Authcode feature, authcodes should be requested only once on a given call. This requires careful engineering of:

- the TIE Trunk group option for Authcode prompting
- the minimum Facility Restriction Level (FRL) values assigned to route lists

In a private network, users at a switch arranged for the Uniform Dialing Plan (UDP) through a dedicated trunk group to a Node can use the Authcode conditionally last feature at the Node in the same manner as

Copyright © 2003-2010 Nortel Networks. All Rights Reserved.

those stations located directly at the Node. However, these users cannot access the authcode through the same trunk group after the Special Prefix (SPRE) feature is activated.

Feature interactions

Feature key operations

While a user is entering an Authcode, the following feature keys operate as intended and do not affect operation of the authorization code feature:

- Make Set Busy
- Buzz
- Volume Control

The operation of the following keys is ignored during Authcode operation:

- Conference
- Override
- Call Forward and Call Transfer
- Call Pickup
- Charge Account
- Calling Party Number
- Privacy Release
- Ring Again
- Barge-In and Busy Verify
- Speed Call
- Recall
- Do Not Disturb
- Digit Display

The following key operations abort the Authcode operation and any digits entered in Authcode are ignored:

- Directory Number
- Paging
- Voice Call
- Not Ready
- In-Calls
- Call Waiting

Copyright © 2003-2010 Nortel Networks. All Rights Reserved.

- Hold
- Release

If the caller initiates a switchhook flash while entering an Authcode, the results are unpredictable; the switchhook flash can be ignored or interpreted as the digit "1."

Authcodes after SPRE can be stored as speed call or autodial entries. When this is done, the stored number (entry) must contain only the access code and Authcode digits. All digits in the entry after the access code are interpreted as Authcode digits.

In the case of Authcode conditionally last, authcodes can be stored as autodial entries but not speed call entries. If necessary, the caller can continue to enter more Authcode digits after operation of the autodial or speed call key. However, for security reasons, authcodes should not be stored as autodial or speed call entries.

Call Detail Recording (CDR)

If the Call Detail Recording (CDR) of authcodes is specified, a record is generated on the CDR device each time an Authcode is entered. The record is passed to CDR only if one of the following occurs:

- The call becomes established (for example, a trunk is seized or local telephone answers).
- The call cannot be completed (for example, when no trunks are available).
- The Ring Again feature is applied to the call.

Authcode input through TIE trunks

Authcodes can be entered through access TIE trunks. Incoming or two-way TIE Trunk groups at a switch equipped with the Network Authorization Code feature can be defined to prompt the user for an Authcode entry.

Direct Inward System Access (DISA)

If a caller makes a Network Alternate Route Selection (NARS), Basic Alternate Route Selection (BARS), or Coordinated Dialing Plan (CDP) call in association with a valid Direct Inward System Access (DISA) call, the Network Class of Service (NCOS) associated with the DISA Directory Number (DN) is used for NARS, BARS, or CDP route selection. If the FRL of this NCOS is too low to access the route list that NARS, BARS, or CDP has selected for the call, the caller is prompted for an Authcode entry, unless an Authcode (for example, Authcode after SPRE) was entered previously.

Copyright © 2003-2010 Nortel Networks. All Rights Reserved.

Barge-in or busy verify

If the attendant uses Barge-In or Busy Verify to break into a connection where an Authcode is being entered, the Authcode entry is affected. If the code entered is invalid as a result, the user is given overflow tone when the EOD timer expires.

Centralized attendant service

The Centralized Attendant Service (CAS) feature enables several remote switches to share the attendant services at one central location. A CAS attendant can enter an Authcode through a Release Link Trunk (RLT), before connecting or transferring calls to the connecting remote circuit switched network. If the CAS attendant enters a NARS, BARS, or CDP number through an RLT, the NCOS associated with the attendant (at the remote circuit switched network) is used in the NARS, BARS, or CDP route selection process. If the FRL of this NCOS is inadequate, the CAS attendant may be prompted for an Authcode entry.

Call forwarding

The Call Forwarding feature provides two customer options: Call Forwarding-Originating (CFO) Party's Class of Service (COS) or Call Forwarding-Forwarding (CFF) Party's COS. With the Network Authorization (NAUT) code feature and the CFO option, a caller may be prompted for an Authcode entry after a call to a station that forwards the call to a NARS, BARS, or CDP number. With the CFF option, the user is not prompted by the local switch for an Authcode entry after such a call.

Network Class of Service (NCOS)

An Authcode entry modifies the user's NCOS for the duration of the call. The FRL associated with the user's assigned NCOS is used to determine if it is necessary to prompt for an Authcode entry. After an Authcode is collected and validated, the NCOS associated with the Authcode is used for the duration of the call.

Network/Basic Alternate Route Selection (NARS/BARS)

During NARS/BARS route selection, the FRL associated with the call originator's NCOS is compared with the FRL of the selected route list. If the originator's FRL is lower and no Authcode was entered previously, the system can prompt for an Authcode entry. A valid Authcode modifies the originator's NCOS and, hence, FRL. This new FRL is then used for route selection.

Network queuing

When an Authcode is entered, the NCOS associated with the Authcode is used to determine Network Queuing capabilities.

Copyright © 2003-2010 Nortel Networks. All Rights Reserved.

Coordinated Dialing Plan (CDP)

Authcode after SPRE can be used before dialing a CDP call. If the NAUT feature is equipped, the "conditionally last" request for an Authcode entry applies.

Packaging

Basic Authorization Code is available in package 25.

Network Authorization Code is available in package 63.

Station Specific Authorization Codes are available in package 229. Package 229 requires package 25.

Feature implementation

This section describes the implementation steps for Basic and Network Authorization Codes. Refer to the *Software Input Output Administration (NN43001-611)* for a complete description of these procedures.

The following responses to prompts in LD 88 are required. Default responses appear in parentheses.

Table 74
LD 88: Authcode data block (AUB)

Prompt	Response	Description
REQ	NEW CHG PRT	Action request (create, modify, or print).
TYPE	AUB	Authcode data block.
CUST	xx	Customer number as defined in LD 15.
SPWD	xxxx	Secure data password.
ALEN	1-14	Number of digits in Authcode.
ACDR	YES NO	Activate CDR for Authcodes.
RANR	0-511	RAN route number for 'Authcode Last' prompt (NAUT). Range for Large System and CS 1000E system.
	0-127	Range for Meridian 1 Small System, Media Gateway 1000B, and Media Gateway 1000T.
CLAS	(0)-115	Classcode value assigned to Authcode (NAUT).
COS	aaa	Class of Service.
TGAR	(0)-31	Trunk Group Access Restrictions.
NCOS	(0)-99	Network Class of Service.
AUTO	YES NO	Automatically generate authcodes.
-SECR	0-9999	Security password (NAUT).

Copyright © 2003-2010 Nortel Networks. All Rights Reserved.

Table 74
LD 88: Authcode data block (AUB) (cont'd.)

Prompt	Response	Description
-NMBR	1-9999	Number of authcodes to be generated automatically (NAUT).
-CLAS	(0)-115	Classcode value assigned to Authcode (NAUT).

Table 75
LD 88: Delete Authcode data block

Prompt	Response	Description
REQ	OUT	Action request (remove data).
TYPE	AUB	Authcode data block.
CUST	xx	Customer number as defined in LD 15.
SPWD	xxxx	Secure data password.
CODE	xxxx	Authcode (number of digits must equal ALEN).
CLAS	(0)-115	Classcode value assigned to Authcode (NAUT).

Table 76
LD 88: Authcode table entries

Prompt	Response	Description
REQ	NEW CHG PRT	Action request (create, modify, or print).
TYPE	AUT	Authcode entries.
CUST	xx	Customer number as defined in LD 15.
SPWD	xxxx	Secure data password.
CODE	xxxx	Authcode (number of digits must equal ALEN).
CLAS	(0)-115	Classcode value assigned to Authcode (NAUT).

Table 77
LD 88: Delete Authcode table entries

Prompt	Response	Description
REQ:	OUT	Action request (remove data).
TYPE:	AUT	Authcode entries.
CUST	xx	Customer number as defined in LD 15.
SPWD	xxxx	Secure data password.
CODE	xxxx	Authcode (number of digits must equal ALEN).
SECR	0-9999	Security password (NAUT).

To activate or deactivate Station Specific Authorization Codes (SSAU) at a particular telephone, use LD 10/11.

Copyright © 2003-2010 Nortel Networks. All Rights Reserved.

Table 78
LD 10/11: Activate SSAU

Prompt	Response	Description
REQ	NEW CHG	Add or modify.
TYPE	xxxx	Telephone type: 500 (500 or 2500) 2006, 2008, 2009, 2016, 2018, 2112, 2216, 2317, 2616, 3000, SL1
CLS	(AUTU)	Authcode unrestricted.
	AUTR	Authcode restricted.
	AUTD	Authcode denied.
MAUT	(NO) YES	Modify assigned authcodes for this telephone.
SPWD	xxxx	Correct security password (if one is defined).
AUTH	x nnnn	x is in the range of 1-6; nnnn is the assigned Authcode (a valid authorization code defined in Overlay 88).
	X	Entering an uppercase X deletes an assigned Authcode.
Note: Changing an AUTR telephone to AUTU or AUTD clears all assigned Authcode information previously defined for that telephone.		

Table 79
LD 20: Station print

Prompt	Response	Description
REQ	PRT	Print command.
TYPE	xxxx	Type of Terminal Block.
TN	l s c u	Terminal number. Format for Large System and CS 1000E system, where l = loop, s = shelf, c = card, u = unit.
	c u	Format for Meridian 1 Small System, Media Gateway 1000B, and Media Gateway 1000T, where c = card and u = unit.
CDEN	xx	Card density.

Copyright © 2003-2010 Nortel Networks. All Rights Reserved.

Table 79
LD 20: Station print (cont'd.)

Prompt	Response	Description
CUST	xx	Customer number as defined in LD 15.
SPWD	xxxx	Security data password.

Note: SPWD is not prompted if any of the following is true:

- ***The Station Specific Authcode package (220) is not equipped.***
- ***The response to the TYPE prompt is not TNB, SL1, 2000, 2003, 2009, 2018, 2112, 2317, 3000, ARIES, 2006, 2008, 2016, 2216, or 500.***
- ***The response to the TN is more than one specific TN.***
- ***The response to the TN prompt is a unique TN, but the customer of this TN does not have a security data password defined.***
- ***The response to the CUST prompt is not a specific customer.***
- ***The response to the CUST prompt is a specific customer number, but the customer does not have a security data password defined.***

Table 80
LD 81: Feature print

Prompt	Response	Description
REQ	1ST	List sets with the feature specified.
	CNT	Count sets with the feature specified.
CUST	xx	Customer number as defined in LD 15.
FEAT	AUTU	Authcode unrestricted.
	AUTR	Authcode restricted.
	AUTD	Authcode denied.

Feature operation

Authcode after SPRE

Analog (500/2500-type), SL-1 or digital telephones

To enter an Authcode after the SPRE, the caller proceeds as follows:

- If there is no call in progress, go off-hook or press a DN key. If there is a call in progress, switchhook flash (analog (500/2500-type) or press the call transfer or conference key (SL-1 or digital telephone) to obtain special (interrupted) dial tone.
- Dial the Authcode access number (SPRE and the digit "6"). Dial tone is removed after the SPRE digit is dialed.
- Dial the Authcode digits. A second dial tone is heard if the Authcode is valid. If the Authcode is invalid, no response is given for 30 seconds.

Copyright © 2003-2010 Nortel Networks. All Rights Reserved.

Then the overflow tone is given for 15 seconds and the call is force disconnected. For more information about how invalid authcodes are handled, refer to “Invalid authcodes” (page 161).

- When the second dial tone is heard, dial the call in the normal manner. If call transfer/conference is in effect, complete the transfer/conference as normal.

Attendant

To enter an Authcode after SPRE, the attendant proceeds as follows:

- If there is a call on the source loop, proceed to the next step. If there is no call on the source loop, press an idle loop (LPK) key.
- Dial the Authcode access number (SPRE and the digit "6"), followed by the Authcode.
- Dial as usual after receiving dial tone denoting a valid authorization code. (If the code is invalid, overflow tone is returned immediately).

Authcode conditionally last

The following procedure is used to enter an Authcode conditionally last from a 500/2500/SL-1 or digital telephone or attendant console (NAUT feature only).

- Dial a NARS, BARS, or CDP call.
- Receive an "Authcode request tone" (10 bursts of dial tone, followed by steady dial tone), optionally preceded with a recorded announcement, indicating that an Authcode entry is required.
- Dial the Authcode. The dial tone is removed after the first digit is dialed. If the Authcode is valid, the call is processed as a normal call. If the Authcode is invalid, no response is given for 30 seconds. Then the overflow tone is given for 15 seconds and the call is force disconnected. For more information about how invalid authcodes are handled, refer to “Invalid authcodes” (page 161).

Invalid authcodes

When an invalid Authcode is entered, the reorder tone occurs after the interdigit time out. (Interdigit timeout is set by prompts DIDT or DIND in LD 15.) The Authcode feature does not give the overflow tone immediately upon detecting an invalid Authcode to prevent repetitive attempts. However, the network Authcode feature (with the NAUT package) does return the overflow tone to the local originating attendant after the attendant enters an invalid Authcode with the correct number of digits.

On a TIE Trunk, entering an invalid Authcode locks out the line.

Copyright © 2003-2010 Nortel Networks. All Rights Reserved.

Copyright © 2003-2010 Nortel Networks. All Rights Reserved.

Virtual office logged out

Contents

This section contains information on the following topics:

"Overview " (page 163)

"Making an ESA call from a logged out phone" (page 164)

"The VOLO process" (page 164)

"When a dialed number is not an ESDN number" (page 165)

"Register a VOLO Phone with the call server" (page 165)

Overview

Virtual Office Logged Out (VOLO) allows a logged out phone to make and receive emergency services access (ESA) calls, and to temporarily register with the call server. Registration begins when a user tries to make a call from the logged out phone by going off hook, pressing the primary key, or using the handsfree or headset.

The call server is provisioned with a pool of emergency terminal numbers (TN) referred to as emergency services access terminal number (ESTN). The ESTN is allocated from this pool to register the logged out phone.

ESA VOLO timer

The ESA VOLO timer is used for each logged out phone that has an allocated emergency TN. The emergency TN is released and the phone goes to the original logged out state when the timer expires.

The timer is created and set to 60 seconds when the emergency TN is allocated and stops when the user dials the ESA number.

A user has a maximum of 60 seconds to dial an ESA number. After this time, all the key presses are lost and the user has to make the call again. If a user dials a wrong number, they receive an overflow tone and

Copyright © 2003-2010 Nortel Networks. All Rights Reserved.

a release and try again message that appears on the phone display. This prevents the ESTN call from staying on the call server due to an accidental pressing of the primary key or by dropping the handset.

The timer is stopped when the ESA call is initiated and when waiting for the answer and connect phase and is restarted when the user completes the ESA call. The timer is set to 20 minutes so a user can receive a callback during that period. The timer is restarted if the user makes another ESA call. If the timer expires, but the phone is involved in a call, the timeout event is ignored. The 20 minute timer reloads when the call is finished.

Making an ESA call from a logged out phone

When the logged out phone registers with the call server, using the allocated ESTN, the key presses are transmitted to the call server according to the existing operation. The call server initiates the call, provides the dial tone, and collects the digits.

The logged out phone makes only ESA calls. The configured ESTNs are fully restricted. When the directory number (DN) translation is complete, the call server checks the type of the DN and proceeds with the call only if it is an emergency services access directory number (ESDN) or other locally-routed emergency DN.

The VOLO process

The VOLO process begins when the user performs an action on a logged out phone. The key press event is analyzed by the LTPS. If the event received from the phone is not a key event, for example, accessory connect or disconnect, the LTPS ignores the event.

For registration with the call server, the following applies:

- The LTPS checks if the logged out phone is registered with the call server.
- If the logged out phone is registered with the call server, the LTPS processes all of the key presses and sends them to the call server with the existing functionality.
- The call server receives the keys and processes them with the existing functionality as follows:
  - The call server allocates the call register and generates the dial tone when the user goes offhook.
  - The call server processes dialing with the existing functionality and the Accept Dialing Emergency Local Numbers on with the call server feature.

Copyright © 2003-2010 Nortel Networks. All Rights Reserved.

— As the DN translation is complete, and the dialed number is an ESDN or one of the other two local emergency numbers, the call server makes the ESA call with the ESA functionality.

— The OSN treatment is provided for the ESA call with the ESA functionality for ESDN number. The Name, DES and emergency DN configured for the corresponding ESTN are sent to the OSN phone/terminal.

- When the ESA call is originated, the ESAVOLO timer is stopped.
- When the user completes the ESA call, the LTPS shows the Awaiting Callback text on the phone display. The call server reloads the ESAVOLO timer to the user-defined value that is 20 minutes by default.
- If a user hangs up without dialing any number before the one minute timer expires, no action is taken until the one minute timer expires and the set gets deregistered. This avoids subsequent attempts to reregister the phone in case the disconnect was unintentional.

When a dialed number is not an ESDN number

If the dialed number is not an ESA number, the call server performs the overflow treatment with the existing functionality as follows:

- it provides the overflow tone
- it releases the call
- it shows the release and try again message on the phone

The user can still dial the ESDN number before the one minute timer expires if it was the first attempt.

Register a VOLO Phone with the call server

The process for registering a VOLO Phone with a call server begins when a key is pressed on a VOLO phone not registered with the call server as follows:

- The LTPS analyzes if the registration is pending for the logged out phone
- Before the registration begins, the LTPS analyzes the pressed key.
- One of the following keys is used to originate the ESA call from the logged out phone:

  — OFFHOOK

  — PRIMARY KEY

Copyright © 2003-2010 Nortel Networks. All Rights Reserved.

— HANDSFREE

— HEADSET key or In-calls key for the IPACD phone

- The LTPS determines that the registration is pending (or started) for the logged out phone and sets the ESAVOLORegPending flag.
- The LTPS directs the event to the dedicated ESAVOLO key buffer.
- The LTPS sends the new ESAVOLO activity message to the call server. Defining a new message is not required because the existing PBXOnline2 message can be edited. Only the new message type is defined that is used to distinguish between the ESAVOLO activity message and PBXOnline2 message. The LTPS sends the new ESAVOLO activity message to the call server.
- The call server receives the ESAVOLO activity message and searches the Emergency TN pool for the unused TN and processes as follows:

  — it marks the TN as used and copies the zone value from the original TN to VOLO TN

  — it creates the ESAVOLO timer and executes the SYS_03: Reset ESAVOLO to reset the timer to one minute

  — it sends the existing TN status 2 message with the ESA TN reserved reason to the LTPS. The TN and other parameters are filled as specified in the emergency TN block
- The LTPS receives the TN status 2 message with the new ESA TN reserved result and processes as follows:

  — it saves the TN and other parameters received in the message

  — it automatically generates the SSD messages corresponding to the key events contained in the ESA VOLO key buffer

  — it requests the key map download
- The key map download is processed with the existing functionality. The only key that is configured on the emergency TN is the primary DN; therefore, the phone display has the primary DN label in its feature key area. In some cases, the soft key and text areas are empty after the key map download.

Copyright © 2003-2010 Nortel Networks. All Rights Reserved.

List of terms

AC

Access Codes

AUTD

Authcode denied class of service

AUTR

Authcode restricted class of service

AUTU

Authcode unrestricted class of service

BARS

Basic Alternate Route Selection

BAUT

Basic Authorization Code

Bellcore

The organization which oversees and administers the North American Numbering Plan.

CA

Call Aggregators — (as defined by FCC Docket 90-313) are persons whom, in the course of their operations, make telephones available to the public or to transient end users of its premises for interstate telephone calls, using a provider of operator services.

Aggregators, as defined by the FCC, include the following:

- Hotels and motels
- Hospitals
- Universities
- Airports

Copyright © 2003-2010 Nortel Networks. All Rights Reserved.

- Gas Stations
- Pay Telephone Owners

CAC

Carrier Access Code, used by Equal Access feature. Code dialed by the end user, which is made up of the Equal Access identifier and the Carrier Identification Code.

CAS

Centralized Attendant Service

CBQ

Call-Back Queuing

CBQCM

Call-Back Queuing to Conventional Mains

CCBQ

Coordinated Call-Back Queuing

CDP

Coordinated Dialing Plan

CDR

Call Detail Recording

CFF

Call Forwarding-Forwarding

CFO

Call Forwarding-Originating

CIC

Carrier Identification Code, used by Equal Access feature.

COS

Class of Service

DDD

Direct Distance Dialing

DID

Direct Inward Dialing

Copyright © 2003-2010 Nortel Networks. All Rights Reserved.

DISA
Direct Inward System Access

EOD
End-of-Dialing

ERWT
Expensive Route Warning Tone

ESN
Electronic Switched Network

ETN
Electronic TIE Network

FCAS
Free Calling Area Screening

FCC
Federal Communications Commission

FRL
Facility Restriction Level

HLOC
Home Location Code

HNPA
Home Number Plan Area

Interchangeable NPAs
Interchangeable NPA codes are those NPA codes which comply with the new NXX format as specified by the North American Numbering Plan.

ITGE
Incoming Trunk Group Exclusion

LDN
Listed Directory Number

NANP
North American Numbering Plan

Copyright © 2003-2010 Nortel Networks. All Rights Reserved.

NARS

Network Alternate Route Selection

NAUT

Network Authorization Code

NCOS

Network Class of Service

NFCR

New Flexible Code Restriction

NPA

Numbering Plan Area (code)

NPX

North American Numbering Plan NPA format for Pre Interchangeable Numbering Plan Area codes where: N = any digit between two (2) and nine (9), P = digit zero (0) or one (1), and X = any digit between zero (0) and nine (9).

NSC

Network Speed Call

NSIG

Network Signaling

NTRF

Network Traffic

NXFER

Network Call Transfer

NXX

North American Numbering Plan Local Exchange format and North American Numbering Plan NPA format for Interchangeable Numbering Plan Area codes where: N = any digit between two (2) and nine (9), and X = any digit between zero (0) and nine (9).

OHQ

Off-Hook Queuing

RDB

Route Data Block

Copyright © 2003-2010 Nortel Networks. All Rights Reserved.

RLT
Release Link Trunk

SDR
Supplemental Digit Restriction

SDRR
Supplemental Digit Restriction/Recognition

SIGO
Signaling Arrangement

SPN
Special Number

SSAU
Station Specific Authorization Code

SSP
Special Service Prefix

TCOS
Traveling Class of Service

TGAR
Trunk Group Access Restriction

TLD
Toll Denied

TOD
Time-of-Day

TTTN
Tandem TIE Trunk Network

UDP
Uniform Dialing Plan

Copyright © 2003-2010 Nortel Networks. All Rights Reserved.

XFER

Call Transfer

Copyright © 2003-2010 Nortel Networks. All Rights Reserved.

Index

500 telephones
SSAU in 113
500/2500 telephones
call-backs on 67, 69, 71

A

administration, authcode 148
AIOD (Automatic Identification of Outward Dialing) with CCBQ 71
ANI (Automatic Number Identification) with CCBQ 71
answer supervision of CBQCM 72–73
attendant authcode input 150
after SPRE 161
attendant functions
with CBQ 68
with OHQ 65
AUTD (AUThcode Denied) access level 113
Authcode Conditionally Last feature with CCBQ 68
authcodes
administration 148
after SPRE 160
attendant input 150, 161
conditionally last 150, 153, 161
creating 149
exemptcodes for 149
invalid 161
request tones 150
station specific 113
validation 112
Authorization Code Data Blocks 148
autodial entries 155
AUTR (AUThcode Restricted) access level 113
AUTU (AUThcode Unrestricted) access level 113

B

Barge-In feature
on CCBQ calls 70
with CBQ 68
with OHQ 65
Barge-In or Busy Verify 156
BARS (Basic Alternate Route Selection) 112, 150, 156
BAUT (Basic Authorization Code) 112
authcode administration in 148
authcode validation in 112
packaging 157
SSAU in 113

C

Call Forward
with CBQ 68
with CBQCM 73
Call Forwarding 156
call modification and OHQ 64
Call Transfer
with CBQCM 73
with CCBQ 71
Call Waiting feature and OHQ 64
calls
time outs 62
Camp-On feature and OHQ 64
CAS (Centralized Attendant Service) 156
CBQ (Call-Back Queuing)
as alternative to OHQ 62–63
call-backs 67
CBQ(a) 65–66
CBQ(i) 65–66

Copyright © 2003-2010 Nortel Networks. All Rights Reserved.

eligibility tests 65
feature interactions 68
offer and tone 66
options 65
traffic measurements 67
CBQCM (Call-Back Queuing to Conventional Mains)
call-backs 72
feature limitations 73
offer and tone 72
traffic measurements 73
CBQCM Call-Back Queuing to Conventional Mains
eligibility 72
CCBQ (Coordinated Call-Back Queuing)
call-backs 69
eligibility 68
feature interactions and limitations 70
offer and tone 69
traffic measurements 70
CDP (Coordinated Dialing Plan) 112, 150, 157
CDP (Coordinated Dialing Plan) with CCBQ 71
CDR (Call Detail Recording) 150, 155
Centrex systems 153
CFF (Call Forwarding-Forwarding) 156
CFO (Call Forwarding-Originating) 156
classcodes 148
conditionally last authcodes 150, 153, 161
conference calls with CCBQ 71
COS (Class of Service) 148

D

default facility restriction levels 149
digital telephones
SSAU in 113
DISA (Direct Inward System Access) 112, 150, 155
DN (Directory Number) 150
internal for accepting CBQCM offerings 73
multiple appearance with CBQ 68

E

EOD (End-of-Dialing) timer 113
ERWT (Expensive Route Warning Tone) 63
with CBQ 66–67
with CBQCM 73
with CCBQ 69
ETN (Electronic Tie Network) 62, 72
exemptcodes 149
extension numbers and CBQCM 72

F

feature interactions
Barge-In or Busy Verify 156
BARS 156
Call Forwarding 156
CAS 156
CBQ (Call-Back Queuing) 68
CCBQ (Coordinated Call-Back Queuing) 70
CDP 157
CDR 155
DISA 155
limitations of CBQCM (Call-Back Queuing Conventional Mains) 73
NARS 156
NCOS 156
OHQ (Off-Hook Queuing) 64
Tie trunks 155
Force Disconnect with CBQ 68
FRL (Facility Restriction Level) 62, 72, 149–150

H

Hunting with CBQ 68

I

ignored keys in authcode input 154
implementation
AUB 157
incoming trunk groups
measurements (TFN003) 64, 70, 73
testing with CCBQ 69
initialization and CCBQ 70
interdigit timeout 161
international calls 53
invalid authcodes 161

L

LD 10 program 113, 159
LD 11 program 113, 159
LD 16 program 149

Copyright © 2003-2010 Nortel Networks. All Rights Reserved.

LD 86 program 149
LD 88 program
with SSAU 113
LOC (location) code
UDP 21
loop keys 65

M

Meridian 1 systems
CBQ availability 65
CBQCM availability 72
CCBQ availability 68
OHQ availability 62

N

NARS (Network Alternate Route Selection) 112, 150, 156
NARS/BARS (Network Alternate Route Selection/Basic Alternate Route Selection) with CBQ 68
NAUT (Network Authorization Code) 149
attendant authcode input in 150
conditionally last authcode option in 150
packaging 157
NCOS (Network Class of Service) 156
conditionally last authcodes with 150
for CBQ 65
for CBQCM 72
for CCBQ 68
in classcodes 148
measurements (TFN002) 64, 68
Network Queuing 156
NPA (Numbering Plan Area) codes
with FCAS 45
NTRF (Network Traffic) 64, 67

O

offers and tones
CBQ (Call-Back Queuing) 66
CBQCM (Call-Back Queuing to Conventional Mains) 72, 74
CCBQ (Coordinated Call-Back Queuing) 69
OHQ (Off-Hook Queuing) 63
OHQ (Off-Hook Queuing)
availability 62–63
feature interactions 64
offer and tone 63
traffic measurements 64
operating parameters 113, 153
operator calls
Flexible ESN 0 Routing 53
outpulses
with CBQ 67
with CBQCM 72
with CCBQ 69
overflow tone 113
overflow tones
with CBQ 66
with CCBQ 69

P

PBX systems 153
priorities for calls
assignment 63
counts of queues of 62
setting for CBQ 66

Q

queuing 156
examining upon idle trunks 63
removal of calls from 67

R

RDB (Route Data Block) program 149–150
recorded announcements
with CBQ 66
with CBQCM 72, 74
with CCBQ 69, 71
Register a VOLO Phone with the call server 165
release key 65
remote switches 150, 156
RGA (Ring Again)
lamp buzzes/winks 67
with CBQ 65–66
with CBQCM 73
with CCBQ 69, 71
with OHQ 63
Ring Again feature 155
RLB (Route List Block) program 149
RLT (Release Link Trunk) 156
route lists
examination by CBQ 65
with OHQ feature 62–63
route sets
examination by CBQ 65
with OHQ feature 62

Copyright © 2003-2010 Nortel Networks. All Rights Reserved.

routing measurements (TFN001) 64, 67

S

speed calls 155
SPN (Special Number) codes
  UDP 21
SPRE (Special Prefix) 112, 155, 160
SSAU (Station Specific Authcode) 113
SSAU (Station Specific Authcodes)
  operating parameters 113
  packaging 157
switchhook flash 155

T

TCM (Traveling Class Mark)
    compatibility 62, 72
TCOS (Traveling Class of Service) 62
TFN001 routing measurements
  for CBQ 67
  for OHQ 64
TFN002 NCOS measurements
  for CBQ 68
  for OHQ 64
TFN003 incoming trunk group
    measurements
  for CBQCM 73
  for CCBQ 70
  for OHQ 64
TGAR (Trunk Group Access
    Restriction) 148
Tie trunks 112, 155
  with CBQCM 72–73
time outs 62
  on CBQCM call-backs 73
  on CCBQ call-backs 70
timers 63
traffic measurements
  CBQ (Call-Back Queuing) 67
  CBQCM (Call-Back Queuing to
    Conventional Mains) 73
  CCBQ (Coordinated Call-Back
    Queuing) 70
  OHQ (Off-Hook Queuing) 64
trunks
  busy status and OHQ 62
  holding with outpulses 67, 69
  releasing 69, 72
  threshold of queued calls 63
  with CBQCM 72–73

U

UDP (Uniform Dialing Plan) 153

V

validation, authcode 112

Copyright © 2003-2010 Nortel Networks. All Rights Reserved.

Nortel Communication Server 1000

Basic Network Feature Fundamentals

Release: 7.0
Publication: NN43001-579
Document revision: 04.01
Document release date: 4 June 2010

Copyright © 2003-2010 Nortel Networks. All Rights Reserved.

While the information in this document is believed to be accurate and reliable, except as otherwise expressly agreed to in writing NORTEL PROVIDES THIS DOCUMENT "AS IS" WITHOUT WARRANTY OR CONDITION OF ANY KIND, EITHER EXPRESS OR IMPLIED. The information and/or products described in this document are subject to change without notice.

Nortel, Nortel Networks, the Nortel logo, and the Globemark are trademarks of Nortel Networks.

All other trademarks are the property of their respective owners.

To provide feedback or to report a problem in this document, go to www.nortel.com/documentfeedback.

www.nortel.com