Nortel CallPilot

600r Server Maintenance and Diagnostics

NN44200-703

Document status: Standard
Document version: 01.06
Document date: 11 August 2009

Copyright © 2007-2009, Nortel Networks
All Rights Reserved.

While the information in this document is believed to be accurate and reliable, except as otherwise expressly agreed to in writing NORTEL PROVIDES THIS DOCUMENT "AS IS" WITHOUT WARRANTY OR CONDITION OF ANY KIND, EITHER EXPRESS OR IMPLIED. The information and/or products described in this document are subject to change without notice.

Nortel, Nortel Networks, the Nortel logo, and the Globemark are trademarks of Nortel Networks.

All other trademarks are the property of their respective owners.

Trademarks

3COM is a trademark of 3Com Corporation.

ADOBE is a trademark of Adobe Systems Incorporated.

ATLAS is a trademark of Quantum Corporation.

BLACKBERRY is a trademark of Research in Motion Limited.

CRYSTAL REPORTS is a trademark of Seagate Software Inc.

EUDORA is a trademark of Qualcomm.

eTrust and InoculateIT are trademarks of Computer Associates Think Inc.

DIRECTX, EXCHANGE.NET, FRONTPAGE, INTERNET EXPLORER, LINKEXCHANGE, MICROSOFT, MICROSOFT EXCHANGE SERVER, MS-DOS, NETMEETING, OUTLOOK, POWERPOINT, VISUAL STUDIO, WINDOWS, WINDOWS MEDIA, and WINDOWS NT are trademarks of Microsoft Corporation.

GROUPWISE and NOVELL are trademarks of Novell Inc.

LOGITECH is a trademark of Logitech, Inc.

MCAFEE and NETSHIELD are trademarks of McAfee Associates, Inc.

MYLEX is a trademark of Mylex Corporation.

NETSCAPE COMMUNICATOR is a trademark of Netscape Communications Corporation.

NOTES is a trademark of Lotus Development Corporation.

NORTON ANTIVIRUS and PCANYWHERE are trademarks of Symantec Corporation.

QUICKTIME is a trademark of Apple Computer, In.

RADISYS is a trademark of Radisys Corporation.

SLR4, SLR5, and TANDBERG are trademarks of Tandberg Data ASA.

SYBASE is a trademark of Sybase, Inc.

TEAC is a trademark of TEAC Corporation

US ROBOTICS, the US ROBOTICS logo, and SPORTSTER are trademarks of US Robotics.

WINZIP is a trademark of Nico Mark Computing, Inc.

XEON is a trademark of Intel, Inc.

Information for Japan

Japan Denan statement

The following applies to server models 703t, 1002rp, 1005r and 600r:

Warning

Please be aware of the following while installing the equipment:

- Please use the connecting cables, power cord, and AC adaptors shipped with the equipment or specified by Nortel to be used with the equipment. If you use any other equipment, it may cause failures, malfunctioning or fire.
- Power cords shipped with this equipment must not be used with any other equipment. If the above guidelines are not followed, it may lead to death or severe injury.

警告

本製品を安全にご使用頂くため、以下のことにご注意ください。

- 接続ケーブル、電源コード、ACアダプタなどの部品は、必ず製品に同梱されております添付品または指定品をご使用ください。添付品・指定品以外の部品をご使用になると故障や動作不良、火災の原因となることがあります。
- 同梱されております付属の電源コードを他の機器には使用しないでください。

上記注意事項を守らないと、死亡や大怪我など人身事故の原因となることがあります。

Japan VCCI statement

The following applies to server models 703t, 201i, 1002rp, 1005r and 600r:

この装置は、情報処理装置等電波障害自主規制協議会 (VCCI) の規定に基づくクラス A 装置です。この装 置を家庭環境で使用すると電波妨害を引き起こすことがあります。この場合には使用者が適切な対策を取るように要求されることがあります。

This is a Class A product based on the standard of the Voluntary Control Council for Interference by Information Technology Equipment (VCCI). If this equipment is used in a domestic environment, radio disturbance may occur, in which case, the user may be required to take corrective action.

Publication History

August 2009
CallPilot 5.0, Standard 01.06 of the *600r Server Maintenance and Diagnostics* guide is updated to inform about tracking deleted read and unread messages in the Session Trace tool.

May 2008
CallPilot 5.0, Standard 01.05 of the *600r Server Maintenance and Diagnostics* guide is issued with information about the following new hardware: NTRB18DA MGate card, NTRH40AC MPB96 card, and CAT5e DS30 cable.

April 2007
CallPilot 5.0, Standard 01.04 of the *600r Server Maintenance and Diagnostics* guide is issued for general availability.

April 2007
CallPilot 5.0, Standard 01.03 of the *600r Server Maintenance and Diagnostics* guide is issued for general availability.

April 2007
CallPilot 5.0, Standard 01.02 of the *600r Server Maintenance and Diagnostics* guide is issued for CR review.

February 2007
CallPilot 5.0, Standard 01.01 of the *600r Server Maintenance and Diagnostics* guide is issued for general availability.

Copyright © 2007-2009, Nortel Networks

Copyright © 2007-2009, Nortel Networks

Contents

Chapter 1 How to get help **11**

Chapter 2 Outlining maintenance and diagnostics activities **13**
600r server features 13
Maintenance and diagnostics overview 15

Chapter 3 Troubleshooting your CallPilot system **19**
Startup diagnostics overview 19
Basic hardware check 19
Power-On Self-Test diagnostics 23
Interpreting BIOS error messages 24
What to do when the server fails to boot into service 27
Performing a hardware shutdown 28

Chapter 4 Using Windows online diagnostic tools **29**
Overview 29
Viewing event logs 29
Using TCP/IP diagnostic tools 33
Using the chkdsk utility 40

Chapter 5 Monitoring multimedia hardware **43**
Understanding fault management 43
Alarm Monitor 45
Event Browser 46
Channel and Multimedia Monitors 48
The Maintenance screen 48
Viewing component states 51
Starting and stopping components 53
Running integrated diagnostics 56
Viewing the last diagnostic results 58
Working with the Multimedia Monitor 59
Working with the Channel Monitor 60

Chapter 6 Using CallPilot system utilities **63**
Overview 63
Diagnostics Tool 64
PEP Maintenance utility 65

Copyright © 2007-2009, Nortel Networks

Session Trace 66
CallPilot System Monitor 68
CPTrace Tool 72
Backup Restore Tool 73

Chapter 7 Replacing basic chassis components 75
Removing and replacing the front bezel 75
Removing and replacing the server cover 77
Removing and replacing the processor air duct 78
Replacing the power supply 80
Replacing a hard drive 82
Replacing the front fan assembly 84
Replacing the MPB96 card 87
Replacing the DVD-ROM/CDRW drive 90
Replacing memory DIMMs 93
Replacing the software feature key 94

Chapter 8 M1/CS 1000 switch connectivity and the MPB96 97
M1/CS 1000 switch connectivity 97
DSP numbering and location 98

Chapter 9 Maintaining the BIOS and system board firmware 101
Configuring the 600r BIOS and firmware 101
600r server display non-default CMOS settings 104
Using the System Setup Utility logs 105
Maintaining the onboard video and network interface 107

Index 109

Procedures

Procedure To run the startup test 20
Procedure To run the POST 23
Procedure To determine why the server failed to boot to Windows 27
Procedure To determine why CallPilot failed to come into service 28
Procedure To use the operating system Event Viewer 30
Procedure To run the ipconfig command from Windows 34
Procedure To run the ping command from Windows 35
Procedure To run the tracert command from Windows 36
Procedure To run the ARP command from Windows 37
Procedure To run the nbtstat command from Windows 39
Procedure To run the netstat command from Windows 40
Procedure To run the chkdsk utility from Windows 41
Procedure To investigate using the Alarm Monitor 45
Procedure To investigate using the Event Browser 47
Procedure To view the state of a hardware component 52
Procedure To start or stop a component 54
Procedure To run a diagnostic test 57
Procedure To view the last diagnostics results 58
Procedure To view or work with multimedia channel states 59
Procedure To view or work with call channel states 60

Copyright © 2007-2009, Nortel Networks

Procedure To access the Diagnostics Tool 64
Procedure To enable startup diagnostics 65
Procedure To disable startup diagnostics 65
Procedure To access the PEP Maintenance utility 65
Procedure To view a list of all installed PEPs 66
Procedure To access the session trace tool 66
Procedure To find a session 67
Procedure To access the CallPilot System Monitor 69
Procedure To access CPTrace Tool 72
Procedure To remove the front bezel 76
Procedure To replace the front bezel 76
Procedure To remove the server cover 77
Procedure To replace the server cover 78
Procedure To remove the processor air duct 79
Procedure To replace the processor air duct 79
Procedure To replace the power supply 80
Procedure To replace a SCSI hard drive 82
Procedure To replace the front fan assembly 85
Procedure To replace the MPB96 card 88
Procedure To replace the DVD drive 90
Procedure To replace the DIMM cards 93
Procedure To replace the software feature key 94
Procedure To display the Nortel CallPilot Image Menu 102
Procedure To upgrade or configure the BIOS 103
Procedure To view SSU logs 106
Procedure To clear SSU logs 107
Procedure To save SSU logs to a USB media drive 107

Copyright © 2007-2009, Nortel Networks

Copyright © 2007-2009, Nortel Networks

Chapter 1
How to get help

This section explains how to get help for Nortel products and services.

Getting Help from the Nortel Web site

The best way to get technical support for Nortel products is from the Nortel Technical Support Web site:

www.nortel.com/support

This site provides quick access to software, documentation, bulletins, and tools to address issues with Nortel products. More specifically, the site lets you:

- download software, documentation, and product bulletins
- search the Technical Support Web site and the Nortel Knowledge Base for answers to technical issues
- sign up for automatic notification of new software and documentation for Nortel equipment
- open and manage technical support cases

Getting Help over the phone from a Nortel Solutions Center

If you don't find the information you require on the Nortel Technical Support Web site, and have a Nortel support contract, you can also get help over the phone from a Nortel Solutions Center.

In North America, call 1-800-4NORTEL (1-800-466-7835).

Outside North America, go to the following Web site to obtain the phone number for your region:

www.nortel.com/callus

Copyright © 2007-2009, Nortel Networks

Getting Help from a specialist by using an Express Routing Code

To access some Nortel Technical Solutions Centers, you can use an Express Routing Code (ERC) to quickly route your call to a specialist in your Nortel product or service. To locate the ERC for your product or service, go to:

www.nortel.com/erc

Getting Help through a Nortel distributor or reseller

If you purchased a service contract for your Nortel product from a distributor or authorized reseller, contact the technical support staff for that distributor or reseller.

Copyright © 2007-2009, Nortel Networks

Chapter 2
Outlining maintenance and diagnostics activities

In this chapter

"600r server features" (page 13)

"Maintenance and diagnostics overview" (page 15)

600r server features

Front control panel and features

The following diagram shows the front view of the 600r server chassis with the bezel cover on. When the bezel cover is on, the control panel, USB connector, the front serial port, and the DVD-ROM/CDRW drive are visible. With the bezel cover removed, the electrostatic discharge (ESD) connection and the hard drive are accessible.

Figure 1
Front panel (600r)

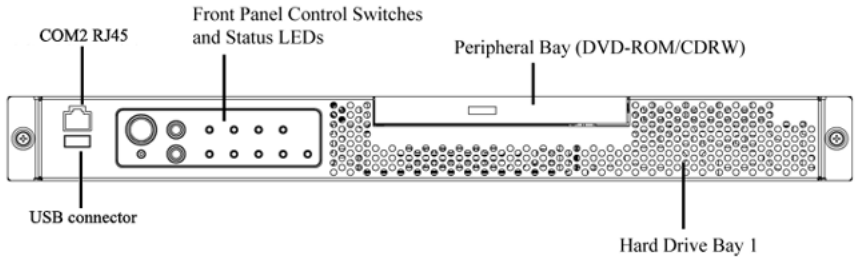

The following diagram shows the front panel controls and status LEDs.

Copyright © 2007-2009, Nortel Networks

Figure 2
Front panel controls and LEDs

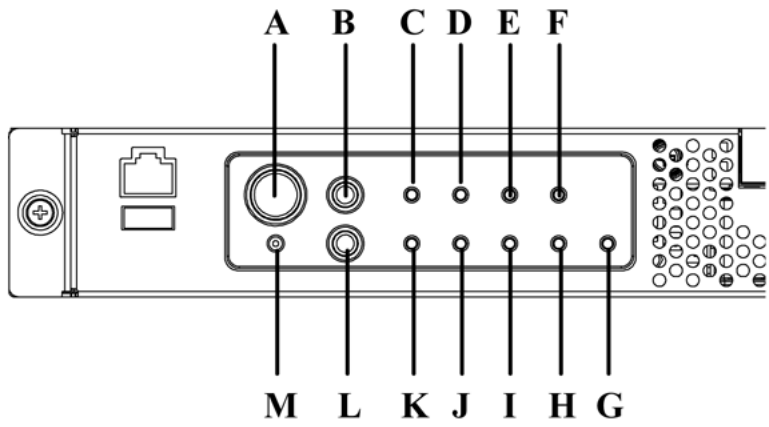

Note: The faults described in the following table are hardware faults and are independent of CallPilot application faults.

Table 1
600r Hardware Faults

Label	Control or feature	Label	Control or feature
A	Power button	M	NMI button (not used)
B	Reset button	L	ID button
C	Critical alarm LED	K	System ID LED (white)
D	Major fault LED	J	Network Interface Card (NIC) activity LED (green)
E	Minor fault LED	I	Main power LED (green)
F	Power LED	H	not used
G	Disk 0 - activity (green) fault (amber)		

Rear panel controls and features

The following diagram shows the back panel controls and features of the 600r. The AC power supply bank is on the right (E). The Peripheral Component Interconnect (PCI) card bracket is in the middle of the back panel while the connectors and ports are along the bottom and left side.

Note: Nortel provides only AC power supply. The server works with a DC-to-AC converter, however, you must ensure the converter meets the AC requirements specified on the label of the power supply cover. To

Copyright © 2007-2009, Nortel Networks

access the power supply cover, remove the server cover. For more information about how to remove the server cover, see "Removing and replacing the server cover" (page 77).

Figure 3
Rear panel controls and features

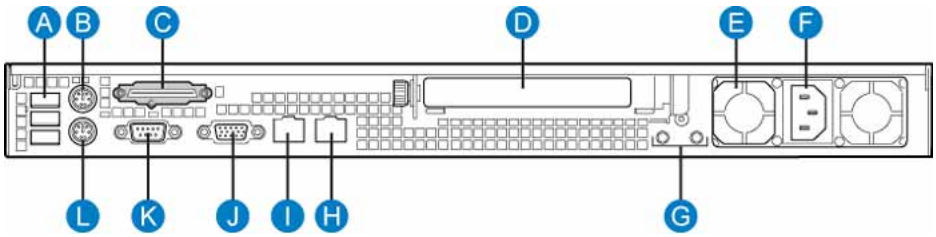

Label	Control or feature	Label	Control or feature
A	USB 0, USB 1, USB 2 (labelled 0, 1, 2 on server, from the bottom up.)	G	Ground studs *
B	PS/2 mouse	H	RJ45 NIC 2 Embedded Local Area Network (ELAN) connector for the ELAN subnet (engraved 2 on server)
C	SCSI port	I	RJ45 NIC 1 Customer Local Area Network (CLAN) connector for Nortel server subnet (engraved 1 on server)
D	PCI card bracket (full-height) for MPB96	J	Video connector
E	Power supply	K	COM1 DB-9 serial port
F	AC power input	L	PS/2 keyboard connector

* Used with DC server input power supplies. This option is not available and not supported by Nortel.

Maintenance and diagnostics overview

When you purchase your CallPilot server, the Windows operating system and CallPilot server software are already installed on your system.

The maintenance and diagnostic activities discussed in this guide are divided into two groups of activities:

- troubleshooting and diagnostics (identifying the cause of system problems and resolving them)
- performing hardware maintenance

Copyright © 2007-2009, Nortel Networks

This guide is for administrators, technicians, and engineers responsible for maintaining a CallPilot server. This guide assumes that you have basic computing skills and are familiar with the necessary safety procedures.

If you are not able to resolve your system problem with the resources described in this guide, you can also refer to the *Troubleshooting Guide* (NN44200-700)

> ***Note:*** Nortel continually updates the *Troubleshooting Guide*, which is available from the Partner Information Center (PIC) at www.nortel.com/pic.

The "Starting up and shutting down the CallPilot server" chapter in the *Installation and Configuration Task List* (NN44200-306) explains how to restart, shut down, and power up the CallPilot server. The system can ask you to perform one or more of these tasks while maintaining your server.

Preparing for maintenance activities

Before you proceed with hardware maintenance activities, review the *600r Server Hardware Installation* (NN44200-307) guide for the following information:

- required tools and equipment
- recommended safety precautions for electrostatic discharge, handling cards, and handling your server

Reference documents

For a list of all CallPilot documents, see the following CallPilot Customer Documentation Map.

Copyright © 2007-2009, Nortel Networks

NORTEL

CallPilot Customer Documentation Map

- **Fundamentals**
  - CallPilot Fundamentals Guide (NN44200-100)
- **Planning and Engineering**
  - Planning and Engineering Guide (NN44200-200)
  - Network Planning Guide (NN44200-201)
  - Converging the Data Network with VoIP Guide (NN43001-260)
  - Solution Integration Guide for Communication Server 1000/CallPilot/Contact Center/Telephony Manager (NN49000-300)*
- **Installation and Configuration**
  - Upgrade and Platform Migration Guide (NN44200-400)
  - High Availability: Installation and Configuration (NN44200-311)
  - Installation and Configuration Task List Guide (NN44200-306)
  - **Server Installation Guides**
    - 201i Server Hardware Installation Guide (NN44200-301)
    - 703t Server Hardware Installation Guide (NN44200-304)
    - 1002rp Server Hardware Installation Guide (NN44200-300)
    - 1005r Server Hardware Installation Guide (NN44200-308)
    - 600r Server Hardware Installation Guide (NN44200-307)
  - **Configuration and Testing Guides**
    - Meridian 1 and CallPilot Server Configuration Guide (NN44200-302)
    - T1/SMDI and CallPilot Server Configuration Guide (NN44200-303)
    - Communication Server 1000 System and CallPilot Server Configuration Guide (NN44200-312)
  - **Unified Messaging Software Installation**
    - Desktop Messaging and My CallPilot Installation and Administration Guide (NN44200-305)
- **Administration**
  - Administrator Guide (NN44200-601)
  - Software Administration and Maintenance Guide (NN44200-600)
  - Meridian Mail to CallPilot Migration Utility Guide (NN44200-502)
  - Application Builder Guide (NN44200-102)
  - Reporter Guide (NN44200-603)
- **Maintenance**
  - CallPilot Troubleshooting Reference Guide (NN44200-700)
  - Preventative Maintenance Guide (NN44200-505)
  - **Server Maintenance and Diagnostics**
    - 201i Server Maintenance and Diagnostics Guide (NN44200-705)
    - 703t Server Maintenance and Diagnostics Guide (NN44200-702)
    - 1002rp Server Maintenance and Diagnostics Guide (NN44200-701)
    - 1005r Server Maintenance and Diagnostics Guide (NN44200-704)
    - 600r Server Maintenance and Diagnostics Guide (NN44200-703)
    - Contact Center Manager Communication Server 1000/Meridian 1 & Voice Processing Guide (297-2183-931)*
- **End User Information**

End User Cards

- Unified Messaging Quick Reference Card
- Unified Messaging Wallet Card
- A-Style Command Comparison Card
- S-Style Command Comparison Card
- Menu Interface Quick Reference Card
- Alternate Command Interface Quick Reference Card

End User Guides

- Multimedia Messaging User Guide
- Speech Activated Messaging User Guide
- Desktop Messaging User Guide for Microsoft Outlook
- Desktop Messaging User Guide for Lotus Notes
- Desktop Messaging User Guide for Novell Groupwise
- Desktop Messaging User Guide for Internet Clients
- Desktop Messaging User Guide for My CallPilot
- Voice Forms Transcriber User Guide

**available in summer 2007*

Copyright © 2007-2009, Nortel Networks

Copyright © 2007-2009, Nortel Networks

Chapter 3
Troubleshooting your CallPilot system

In this chapter

"Startup diagnostics overview" (page 19)

"Basic hardware check" (page 19)

"Power-On Self-Test diagnostics" (page 23)

"Interpreting POST diagnostics" (page 23)

"Interpreting BIOS error messages" (page 24)

"What to do when the server fails to boot into service" (page 27)

"Performing a hardware shutdown" (page 28)

Startup diagnostics overview

This section contains procedures for interpreting the startup diagnostics on the 600r server.

Types of startup diagnostics

The following types of startup diagnostics are available on the server:

- basic hardware check (front panel LEDs)
- Power-On Self-Test (POST) diagnostics

These diagnostics are available at initial system startup or after any 600r server reset.

Basic hardware check

This section describes some basic checks that you can do when you start up the server.

Note: The server faults described in the following table are hardware related and are independent of CallPilot application faults.

Copyright © 2007-2009, Nortel Networks

To run the startup test

Step	Action
1	Turn on the server (A) and observe the front panel display.

Figure 4
600r server front controls and LEDs.

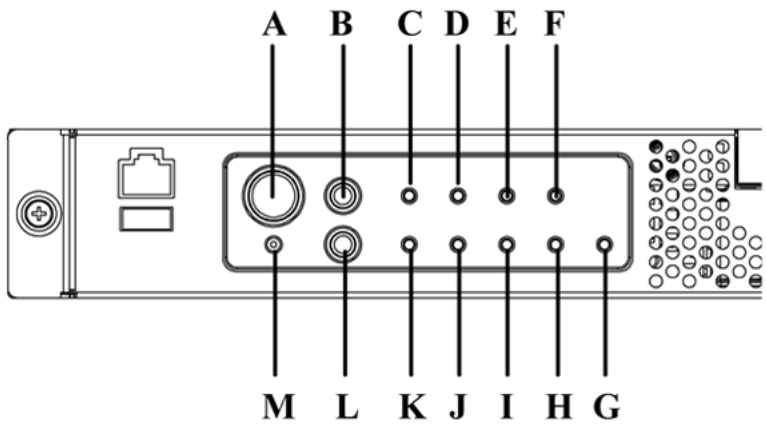

Result: All the LEDs on the front panel illuminate for a few seconds.

Table 2
Front panel

Label	Description
A	Power button
B	Reset button
C	Critical fault LED
D	Major fault LED
E	Minor fault LED
F	Power LED
G	Disk 0 Activity (green) Fault LED (amber)
H	not used
I	Main power LED (green)
J	NIC activity LED (green)
K	System ID LED (white)
L	ID button
M	NMI button (not used)

Copyright © 2007-2009, Nortel Networks

2 Check that all the Alarm LEDs, C to K, are illuminated green. (H is not used). If the Alarm LEDs are green, go to Step 4.

3 If all of the Alarm LEDs are not green,

a. Refer to the following table for descriptions of the four types of fault LEDs.

Table 3
Alarm fault LEDs

Fault severity	Fault description
CRT	A critical system fault is an error or event that has a fatal system impact. The system cannot continue to operate.
MJR	A major system fault is an error or event that has a discernible impact on system operation. The system can continue to operate but with reduced performance.
MNR	A minor system fault is an error or event that has little impact on system operation. The system continues to operate.
PWR	A power supply fault indicates that the power supply is not providing power. The MJR LED is also lit.

b. Refer to the following table to determine the action required after you receive an alarm fault.

Table 4
Front panel LEDs

Label	LED	Functional description
C	CRT (amber)	If LED (C) is continuously lit, there is a critical system fault. A critical system fault is an error or event that is detected by the system with a fatal impact to the system. In this case, the system cannot continue to operate.
D	MJR (amber)	If LED (D) is continuously lit, this indicates the presence of a major system fault. A major system fault is an error or event that is detected by the system that has a discernible impact to system operation. In this case, the system can continue to operate, but with reduced performance. For example, the system can lose the operation of one or two mirrored disks. The front panel major alarm relay is engaged.

Copyright © 2007-2009, Nortel Networks

Label	LED	Functional description
E	MNR (amber)	If LED (E) is continuously lit, this indicates the presence of a minor system fault. A minor system fault is an error or event that has little impact on system operation. The system continues to operate. For example, when LED (E) is continuously lit, a correctable ECC error message occurs. The front panel major alarm relay is engaged.
F	PWR (amber)	If LED (F) is continuously lit, this indicates the presence of a power system fault. The front panel major alarm relay is engaged.
G	Disk 0 Activity (amber)	If LED (G) is flashing green, this indicates disk 0 SCSI hard drive activity. When LED (G) is continuously lit amber, this indicates a fault with disk 0 SCSI hard drive.
H	Not used	Not applicable.
I	Main power (PWR) (green)	If LED (I) is continuously lit green, this indicates the presence of AC power in the server. The LED goes out when the power is turned off or if the power source is disrupted.
J	NIC activity	If LED (J) is continuously lit green, this indicates activity on either NIC.
K	System ID (white)	LED (K) is continuously lit white when activated by either a software command, or by the front panel ID button.

4 Observe the following server actions:

- The hard drive activity LED, G, flashes amber if there is a fault, and flashes green if the system is successfully accessing the hard drive.
- The DVD LED illuminates green temporarily as the system checks the DVD drive.
- The back-panel LED on the power supply turns red as supply fans spin up and components charge. The LED turns green after the power supply is fully operational.

5 Check the monitor for any error messages as the server counts RAM and completes a POST.

For more details about POST, see "Power-On Self-Test diagnostics" (page 23).

Copyright © 2007-2009, Nortel Networks

—End—

Power-On Self-Test diagnostics

The Power-On Self-Test (POST) is a system diagnostic program (stored in the Basic Input/Output System (BIOS)) that runs each time the 600r server starts up. The function of the POST is to test system components and then display status messages.

To run the POST

Step	Action
1	Power up the CallPilot server and monitor. **Result:** After a few seconds, POST begins to run. After the memory test, various screen prompts and messages appear.
2	Observe the screen for any error messages and listen for POST beep codes. If the server halts before POST ends, the server emits a beep code indicating that a fatal system error requires immediate attention. For more details, see "Interpreting POST diagnostics" (page 23). If POST can display a message on the monitor, the server emits two beeps as the message appears. Record the message that appears on the monitor and the beep code that you hear. This information is useful if you need assistance from your technical support representative.

—End—

Interpreting POST diagnostics

This section provides an explanation of the POST diagnostic codes.

POST beep codes

If an error occurs before video initialization, POST emits beep codes that indicate errors in hardware, software, or firmware.

Copyright © 2007-2009, Nortel Networks

Beep codes are represented by a series of separate tones, each equal in length. Beep codes are alarms that are physically heard during the initial system boot. For example, a series of three beeps and no video indicates memory failure. If the system generates beep codes during bootup, contact Nortel Support for further instructions.

ATTENTION

If your system emits POST beep codes, record the beep code sequence and then call Nortel technical support before attempting to correct the problem. Some POST beep codes are fatal and can require that you replace the server.

The following table lists the POST error beep codes. The beep code occurs only after a critical error occurs or after the BIOS fails to boot to the operating system. Note that not all error conditions are supported by BIOS beep codes.

Table 5
POST beep codes

Beep count	Description
1, 2, or 3	Memory error. Reseat the memory or replace the Dual Inline Memory Modules (DIMMs) with known good modules.
4 – 7 or 9 – 11	A fatal error indicates a possible serious system problem occurred. Remove all the add-in cards and re-start the system. If the error still occurs, contact Nortel support. If the beep codes are not generated after the add-in cards are removed, insert the cards one at a time, booting the system between each card addition, until the beeps occur again to reveal the malfunctioning card.
8	A problem with the on-board video card occurred, indicating a fault on the server board.

Interpreting BIOS error messages

After a recoverable error occurs during the POST, the BIOS displays an error message describing the problem.

ATTENTION

If your system displays BIOS error messages, record the error messages and then call Nortel technical support before attempting to correct the problem.

BIOS error messages

BIOS error messages appear on the video monitor. Refer to the following table for a description of the messages.

Copyright © 2007-2009, Nortel Networks

Table 6
BIOS error messages

Error message	Description
GA20 Error	An error occurred with Gate A20 after switching to protected mode during the memory test.
Pri Master HDD Error Pri Slave HDD Error Sec Master HDD Error Sec Slave HDD Error	Could not read sector from corresponding drive.
ATAPI Incompatible Drive • Pri Master Drive • Pri Slave Drive • Sec Master Drive • Sec Slave Drive	The corresponding drive is not an ATAPI (Advanced Technology Attachment Packet Interface) device. Run Setup to make sure the device is selected correctly.
A: Drive Error	No response from the disk drive.
Complementary metal-oxide semiconductor (CMOS) Battery Low	The battery is losing power. Replace the battery soon.
CMOS Display Type Wrong	The display type is different from that stored in CMOS. Check Setup to make sure the type is correct
CMOS Checksum Bad	The CMOS checksum is incorrect. The system can corrupt CMOS memory. Run Setup to reset the values.
CMOS Settings Wrong	The CMOS values are not the same as the last boot. Either these values are corrupted or the battery failed.
CMOS Date/Time Not Set	The time or date values stored in CMOS are invalid. Run Setup to set the correct values.
DMA Error	There is an error during the read or write test of the DMA (Direct Memory Access) controller.
FDC Failure	A Floppy Disk Controller (FDC) error occurred while trying to access the diskette drive controller.

Copyright © 2007-2009, Nortel Networks

Error message	Description
HDC Failure	An error occurred while trying to access the hard disk controller.
Checking NVRAM....	The system is checking NVRAM (Non-Volatile Random Access Memory) to see if it is valid.
Update OK!	The NVRAM is invalid and has been updated.
Updated Failed	The NVRAM is invalid and the system cannot update NVRAM.
Keyboard Error	There is an error in the keyboard connection. Make sure the keyboard is connected properly.
KB/Interface Error	The keyboard interface test failed.
Memory Size Decreased	The memory size has decreased since the last boot. If you did not remove any memory, the memory can be faulty.
Memory Size Increased	The memory size has increased since the last boot. If you have not added any memory, there is a problem with the system.
Memory Size Changed	The memory size has changed since the last boot. If you did not add or remove any memory, the memory can be faulty.
No Boot Device Available	The system did not find a device to boot from.
Off-Board Parity Error	A parity error occurred on an off-board card. This error is followed by the card address.
On-Board Parity Error	A parity error occurred in the on-board memory. This error is followed by the card address.
Parity Error	A parity error occurred in the on-board memory at an unknown address.
NVRAM / CMOS / PASSWORD cleared by Jumper	NVRAM, CMOS, and passwords are cleared. Power the system down and remove the jumper.
<CTRL_N> Pressed	The CMOS is ignored and NVRAM is cleared. You must enter Setup.

Copyright © 2007-2009, Nortel Networks

Replacement parts

Before replacing any parts on your server, refer to the Nortel product catalog for the part codes.

CAUTION
Risk of system damage
The use of parts that are not supplied by Nortel can cause serious system problems or void your Nortel warranty.

The following table shows a list of the current part numbers of field replacement units for the 600r at the time of publishing. Refer to the latest Nortel product catalog for any interim updates to the part numbers.

Table 7
Field replacement units (FRUs)

Description of part	Part number
Hard disk drive mechanical tray	NTRH9205E5
External SCSI terminator	NTRH9244E6
Power supply	NTRH9245E5
Fanset	NTRH9246E5
Hard drive	NTRH9247E6
DDR memory (x2)	NTRH9224E5
DVDROM/CDRW combo	NTRH9232E5

What to do when the server fails to boot into service

This section suggests tasks you can perform to determine why the server fails the bootup cycle.

To determine why the server failed to boot to Windows

Step	Action
1	Try restarting the sever by pressing the power switch. Ensure the power cable for the system monitor and the VGA cable are connected.
2	Listen for server-generated beep codes. Make note of any beep codes and contact Nortel product support.
3	During the boot sequence, take note of the bootup POST messages

Copyright © 2007-2009, Nortel Networks

4 Refer to the *Troubleshooting Guide* (NN44200-700) for other suggestions. If you still cannot determine the cause of the startup failure, call your Nortel technical support representative.

—End—

To determine why CallPilot failed to come into service

Step	Action
	If CallPilot failed to come into service, follow these steps:
1	Assuming the server loads Windows and you are able to log on, note any failed MPB self-diagnostic failures when you log on to Windows.
2	Check the Windows Event Viewer for both Windows system errors and CallPilot application errors. For instructions, see "Viewing event logs" (page 29).
3	Perform a cold reboot by powering off the server through the Windows Shut Down procedure.
4	Refer to the *Troubleshooting Guide* (NN44200-700) for other suggestions. If you still cannot determine the cause of the startup failure, call your Nortel technical support representative.

—End—

Performing a hardware shutdown

If you cannot shut the server down using Windows, press the power switch on the front panel and hold it in for more than 1 second. The server saves all system data and then powers off.

Copyright © 2007-2009, Nortel Networks

Chapter 4
Using Windows online diagnostic tools

In this chapter

"Overview" (page 29)

"Viewing event logs" (page 29)

"Using TCP/IP diagnostic tools" (page 33)

"Using the chkdsk utility" (page 40)

Overview

This section describes how to access the run-time online diagnostic tools provided by the Windows server software. Use the following tools when a serious problem prevents the use of the CallPilot diagnostic tools that are available in CallPilot Manager.

- Windows Event Viewer
- TCP/IP diagnostics
- chkdsk utility

CAUTION
Risk of software corruption
Do not run any utilities that are not documented in this guide.

Viewing event logs

If one or more messages appear on the monitor during the server startup cycle, use the following diagnostic tools to determine what event or fault occurred.

- Windows Event Viewer on the 600r server
- CallPilot Event Browser or Alarm Monitor in CallPilot Manager

Copyright © 2007-2009, Nortel Networks

Note: The Event Browser and Alarm Monitor include online Help for events, which can help you to resolve the problem. If you cannot log on to the CallPilot system using a Web browser due to server problems, use the Windows Event Viewer.

If the server fails to boot up from the hard drive and you cannot log on to Windows, use the Nortel CallPilot Image Utilities on the DVD to view the server system event logs. The server system event logs are hardware specific and are independent of the CallPilot event log files found in the Windows Event Viewer. For more information about hardware event logs, see "Using the System Setup Utility logs" (page 105).

Types of Windows event logs

Three types of event logs are available from the Windows Event Viewer, as follows:

Log type	Description
System	Logs events by Windows components, including Routing and Remote Access Service (RRAS) or other Windows services.
Security	Logs security events, such as logons, logoffs, and illegal access. This option is available only to users with administrative access.
Applications	Logs events by application, such as database file errors.

To use the operating system Event Viewer

Step	Action
1	Click Start → Programs → Administrative Tools → Event Viewer. **Result:** The Event Viewer window appears.

Copyright © 2007-2009, Nortel Networks

Figure 5
Event Viewer

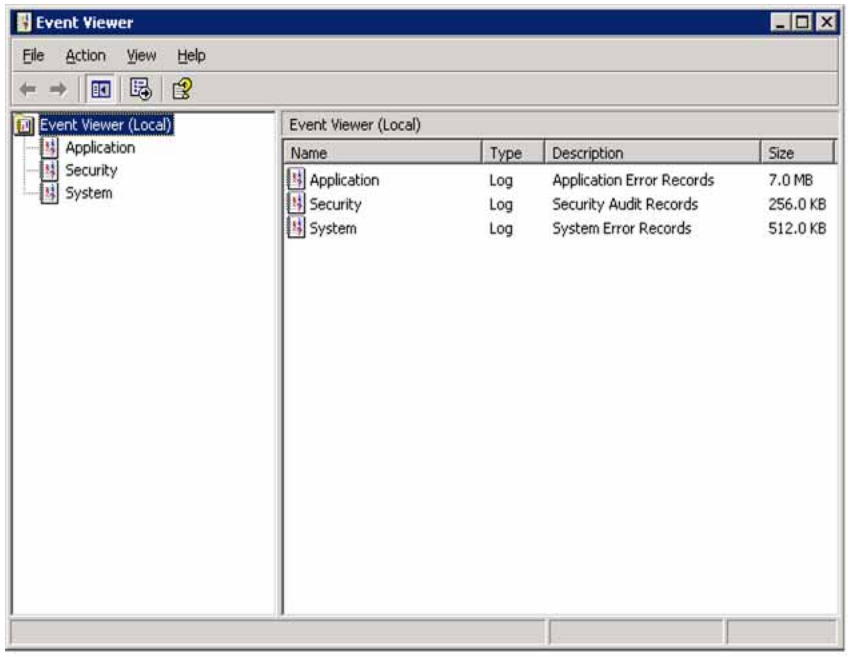

2 To view a log, click the name of the log in the left pane of the window.

The following illustration shows an example of the Application Log.

Figure 6
Application log

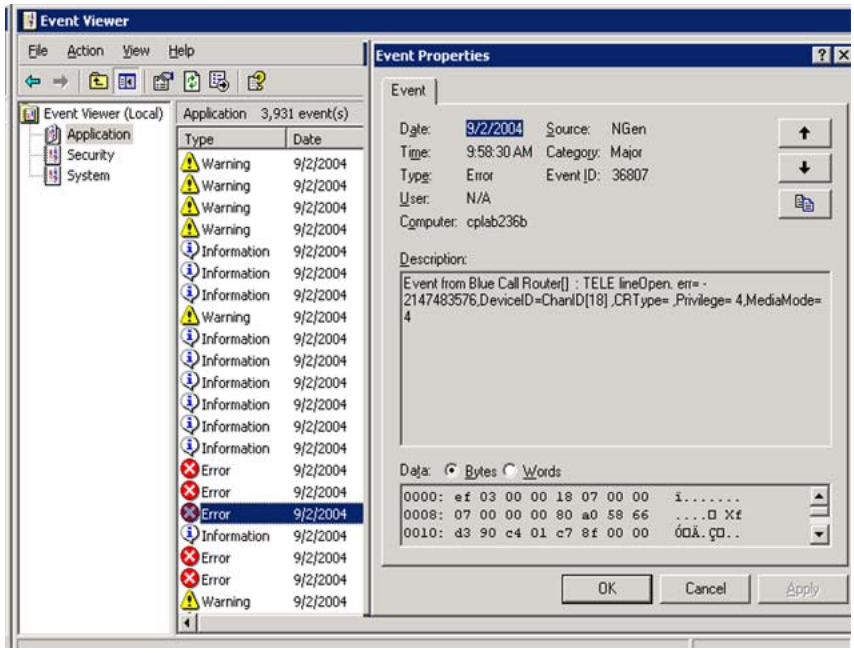

Copyright © 2007-2009, Nortel Networks

The following illustration shows an example of a System log.

Figure 7
System log

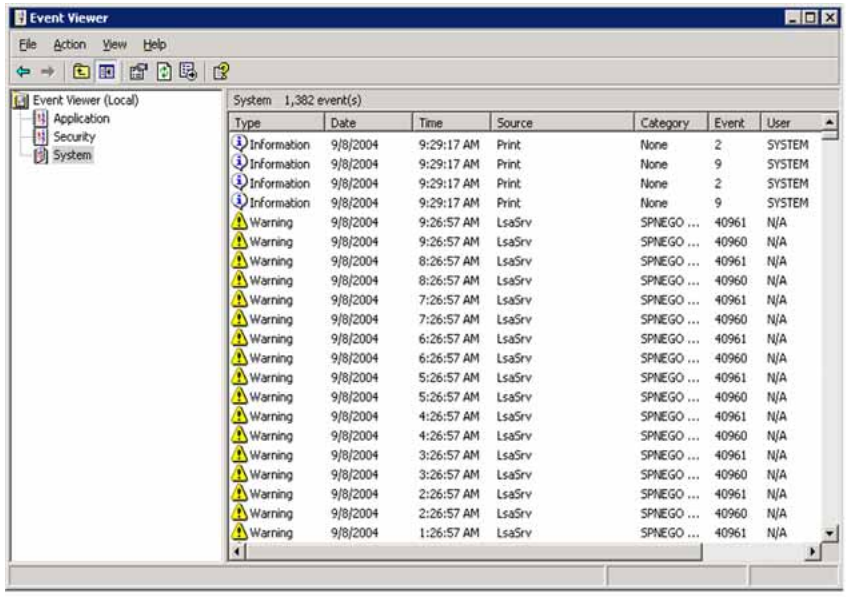

Note: The Security log, which is available only to administrators, is not shown.

3 Look for error codes flagged with or that occurred since the last startup.

Note: Each error is date- and time-stamped. indicates major or critical errors. indicates minor errors, and indicates information.

Copyright © 2007-2009, Nortel Networks

4 To determine the cause of the error, select and then double-click the error.

Result: A description of the error appears in an Event detail dialog box. Use the description to help determine how to resolve errors.

Note: If the error persists or the error description does not suggest a solution, contact your Nortel support representative.

5 Click Close.

Result: The event log reappears.

6 Click File → Exit.

Result: The Event Viewer closes.

—End—

Using TCP/IP diagnostic tools

This section describes the following TCP/IP diagnostic tools that are available for the network adapter:

- ipconfig
- ping
- tracert
- arp
- nbtstat
- netstat

These utilities help you to verify network connectivity, test the network interface, and isolate any configuration problems.

The ipconfig command

The ipconfig command displays IP configuration information.

ipconfig default

If you run the command without flags, the ipconfig command displays the IP address, subnet mask, and default gateway for each adapter bound to TCP/IP.

ipconfig command syntax

The ipconfig command uses the following syntax:

```
ipconfig /[ ]
```

The following flags are available for the ipconfig command.

Copyright © 2007-2009, Nortel Networks

Table 8
ipconfig command extensions

Flag	Description
/?	Displays Help information.
/all	Displays full configuration information.
/release	Releases the IP address for the specified adapter.
/renew	Renews the IP address for the specified adapter.

To run the ipconfig command from Windows

Step	Action
1	Click Start → Programs → Accessories → Command Prompt. **Result:** The Command Prompt window appears.
2	At the Command prompt, type **`ipconfig`** <*parameters*>. **Example:** ipconfig /all
3	Press Enter. **Result:** The system runs the ipconfig utility.
4	Type **`Exit`** to exit the Command Prompt window and return to Windows.

—End—

The ping command

The ping command sends an echo request to a specified host. Use this command to verify network connectivity to the remote device.

Ping command syntax

The ping command uses the following syntax:

```
ping [-t] [-a] [-n count] [-l size] [-f] [-i TTL]
     [-v TOS] [-r count] [-s count]
     [[-j host-list] | [-k host-list]]
     [-w timeout] destination-list
```

Table 9
ping command extensions

Parameter	Description
-t	Pings the specified host until interrupted.
-a	Resolves addresses to host names.

Copyright © 2007-2009, Nortel Networks

Parameter	Description
-n count	Specifies the number of echo requests to send.
-l size	Sends buffer size.
-f	Sets Don't Fragment flag in packet.
-i TTL	Specifies the Time To Live
-v TOS	Specifies the Type Of Service
-r count	Specifies the number of Record route for count hops
-s count	Specifies the number of Time stamp for count hops
-j host-list	Specifies the Loose source route along host list
-k host-list	Specifies the Strict source route along host list
-w timeout	Specifies the Timeout, in milliseconds, to wait for each reply

To run the ping command from Windows

Step	Action
1	Click Start → Programs → Accessories → Command Prompt. **Result:** The Command Prompt window appears.
2	At the Command prompt, type **`ping <destination IP address>`** (for example, ping 127.0.0.1), or **`ping <computer name>`**.
3	Press Enter. **Result:** The system displays the ping results.
4	Type **`Exit`** to exit the Command Prompt window and return to Windows.

—End—

The tracert command

This utility determines the route taken to a destination.

How tracert works

The tracert utility follows several steps to complete its task:

- Tracert sends Internet Control Message Protocol (ICMP) echo packets with varying Time-To-Live (TTL) values to the destination.
- Each router along the path must decrement the TTL on a packet by at least 1 before forwarding it, so the TTL is effectively a hop count.

Copyright © 2007-2009, Nortel Networks

- After the TTL on a packet reaches 0, the router sends back an ICMP Time Exceeded message to the source system.
- Tracert determines the route by sending the first echo packet with a TTL of 1, and incrementing the TTL by 1 on each subsequent transmission until the target responds, or the maximum TTL is reached.
- Tracert then examines the ICMP Time Exceeded messages sent back by intermediate routers.

Tracert syntax

The tracert command uses the following syntax:

```
tracert [-d] [-h maximum_hops] [-j host_list]
        [-w timeout] [target_name]
```

Tracert parameters

The following table shows the tracert parameters.

Table 10
Tracert parameters

Parameter	Description
-d	Specifies not to resolve addresses to hostnames.
-h maximum_hops	Specifies the maximum number of hops to search for the target.
-j host-list	Specifies a loose source route along the host list.
-w timeout	Waits the number of milliseconds specified by the timeout for each reply.
target_name	Specifies the name of the target host.

To run the tracert command from Windows

Step	Action
1	Click Start → Programs → Accessories → Command Prompt. **Result:** The Command Prompt window appears.
2	At the Command prompt, type the following command: `tracert [-d] [-h maximum_hops] [-j host_list] [-w timeout] [target_name]` **Example:** tracert 200.286.0.32
3	Press Enter. **Result:** The system runs the tracert utility.

Copyright © 2007-2009, Nortel Networks

4 Type **`Exit`** to exit the Command Prompt window and return to Windows.

—End—

The ARP command

The ARP command displays and modifies the IP-to-physical address translation tables used by Address Resolution Protocol (ARP).

ARP command syntax

The ARP command uses the following syntax:

```
arp -s inet_addr eth_addr [if_addr]
arp -d inet_addr [if_addr]
arp -a [inet_addr] [-N if_addr]
```

ARP command parameters

Table 11
ARP command parameters

Parameter	Description
-a	Displays current ARP entries by interrogating the current protocol data. If inet_addr is specified, the IP and physical addresses for only the specified computer appear. If more than one network interface uses ARP, entries for each ARP table appear.
-g	Same as -a.
inet_addr	Specifies an Internet address.
if_addr	Specifies the Internet address of the interface where you can modify the address translation table. If not present, the first applicable interface is used.
eth_addr	Specifies a physical address.
-N if_addr	Displays the ARP entries for the network interface specified by if_addr.
-d	Deletes the host specified by inet_addr.
-s	Adds the host and associates the Internet address inet_addr with the physical address eth_addr. The physical address is given as six hexadecimal bytes separated by hyphens. The entry is permanent.

To run the ARP command from Windows

Copyright © 2007-2009, Nortel Networks

Step	Action
1	Click Start → Programs → Accessories → Command Prompt. **Result:** The Command Prompt window appears.
2	At the Command prompt, type **`arp`** with the required parameters (for example, arp -g 200.286.0.32).
3	Press Enter. **Result:** The system runs the ARP command.
4	Type **`Exit`** to exit the Command Prompt window and return to Windows.

—End—

The nbtstat command

The nbtstat command displays protocol statistics and current TCP/IP connections using NBT.

Nbtstat command syntax

The nbtstat command uses the following syntax:

```
nbtstat [-a remotename] [-A IP address] [-c] [-n]
        [-R] [-r] [-S] [-s] [interval]
```

nbstat command parameters

Table 12
nbstat command parameters

Parameter	Description
-a remotename	Lists the remote computer name table using its name.
-A IP address	Lists the remote computer name table using its IP address.
-c	Lists the contents of the NetBIOS name cache giving the IP address of each name.
-n	Lists local NetBIOS names. Registered indicates that the name is registered by broadcast (Bnode) or WINS (other node types).
-R	Reloads the LMHOSTS file after purging all names from the NetBIOS name cache.

Copyright © 2007-2009, Nortel Networks

Parameter	Description
-r	Lists name resolution statistics for Windows networking name resolution. On a Windows computer configured to use WINS, this option returns the number of names resolved and registered through broadcast or through WINS.
-S	Displays both client and server sessions, listing the remote hosts by IP address only.
-s	Displays both client and server sessions and attempts to convert the remote host IP address to a name using the HOSTS file.
interval	Displays selected statistics, pausing interval seconds between each display. Press Ctrl+C to stop displaying statistics. Without this parameter, nbtstat prints the current configuration information once.

To run the nbtstat command from Windows

Step	Action
1	Click Start → Programs → Accessories → Command Prompt. **Result:** The Command Prompt window appears.
2	At the Command prompt, type **`nbtstat`** with the required parameters.
3	Press Enter. **Result:** The system runs the nbtstat utility.
4	Type **`Exit`** to exit the Command Prompt window and return to Windows.

—End—

The netstat command

The netstat command displays current TCP/IP network connections and protocol statistics.

Netstat command syntax

The netstat command uses the following syntax:

```
netstat [-a] [-e] [-n] [-s] [-p proto] [-r] [interval]
```


Copyright © 2007-2009, Nortel Networks

netstat command parameters

Table 13
netstat command parameters

Parameter	Description
-a	Displays all connections and listening ports.
-e	Displays Ethernet statistics. You can combine this with the -s option.
-n	Displays addresses and port numbers in numeric form.
-s	Displays statistics for each protocol.
-p proto	Shows connections for the protocol specified by proto. Proto can be tcp or udp. If used with the -s option, proto can be tcp, udp, or ip.
-r	Displays the contents of the routing table.
interval	Redisplays selected statistics, pausing between each display. Press Ctrl+C to stop redisplaying.

To run the netstat command from Windows

Step	Action
1	Click Start → Programs → Accessories → Command Prompt. **Result:** The Command Prompt window appears.
2	At the Command prompt, type **`netstat`** with the required parameters.
3	Press Enter. **Result:** The system runs the netstat utility.
4	Type **`Exit`** to exit the Command Prompt window and return to Windows.

—End—

Using the chkdsk utility

The chkdsk utility checks a specified disk on the server and displays a status report. You can run the utility on drives C, D, E, or F. The chkdsk utility is an online utility, but it reduces system performance while running.

The chkdsk utility checks for errors at the Windows file system level. CallPilot receives errors at both the Windows and CallPilot file system levels. The chkdsk utility does not detect CallPilot file system level errors.

Copyright © 2007-2009, Nortel Networks

Note: A version of this utility, called autocheck, automatically runs during Windows startup. Output from this utility appears on the blue startup screen.

Chkdsk utility syntax

The chkdsk utility uses the following syntax:

```
chkdsk [drive:][path]filename] [/F] [/V] [/R]
```

Chksdsk utility parameters

Table 14
Chksdsk utility parameters

Parameter	Description
drive:	Drive letter of the drive that you want to check.
filename	Names of files to check for fragmentation.
/F	Optional parameter to fix errors on the disk.
/V	Optional parameter to display the full pathname of every file on the disk.
/R	Optional parameter to locate bad sectors and to recover readable information.

To run the chkdsk utility from Windows

Step	Action
1	Click Start → Programs → Accessories → Command Prompt. **Result:** The Command Prompt window appears.
2	At the Command prompt, type **`chkdsk <drive letter:>`** (for example, chkdsk c:).
3	Press Enter. **Result:** The system runs the chkdsk utility.
4	Type **`Exit`** to exit the Command Prompt window and return to Windows.

—End—

Copyright © 2007-2009, Nortel Networks

Copyright © 2007-2009, Nortel Networks

Chapter 5
Monitoring multimedia hardware

In this chapter

"Understanding fault management" (page 43)

"Alarm Monitor" (page 45)

"Event Browser" (page 46)

"Channel and Multimedia Monitors" (page 48)

"The Maintenance screen" (page 48)

"Viewing component states" (page 51)

"Starting and stopping components" (page 53)

"Running integrated diagnostics" (page 56)

"Viewing the last diagnostic results" (page 58)

"Working with the Multimedia Monitor" (page 59)

"Working with the Channel Monitor" (page 60)

Understanding fault management

Fault management is a subsystem within CallPilot that detects and notifies you of potential or real hardware problems with the multimedia hardware. CallPilot monitors events in the multimedia hardware and raises an alarm when a fault occurs.

Event processing

An event is any change in system configuration or operational state. An event is also any action taken by the system that requires user notification such as a faulty MPB96 card switching to disabled status.

Copyright © 2007-2009, Nortel Networks

All events are reported to the fault management server. The fault management server enables the CallPilot server to listen and respond to its clients. The interaction is called event processing and is the means by which the server detects hardware faults in the multimedia hardware.

Alarm notification

Alarms are warnings generated by events. Alarms communicate the same information as events. However, alarms are reported in the Alarm Monitor instead of the Event Browser, and are managed differently than events.

When an alarm appears in the Alarm Monitor, you must investigate the problem, isolate it, and then fix the cause of the problem. After you fix the problem, the alarm is cleared from the Alarm Monitor.

Component dependencies

The status of some components are dependent on the operational status of other components. If a component fails or is stopped, the dependent components go out of service.

> ***Note:*** The components in your system are based on your CallPilot server type and switch type. Disregard dependencies for components not in your system.

Component	Dependent components
Media Bus	All MPBs, all multimedia channels, and all call channels.
MPB board	All multimedia and call channels associated with the MPB board.
Time switch	All multimedia and call channels associated with the same MPB as the time switch.
MPB96	All multimedia channels on the MPB96 card.
DS30X	All DS30X or DS30 channels associated with the DS30X link.

Detecting hardware problems

Typically, you first become aware of a hardware problem after an alarm is raised. All hardware faults produce an alarm (or series of alarms, depending on the problem) in the Alarm Monitor.

Other indications of a hardware problem include the following:

- user complaints
- call processing difficulties, such as busy signals, static, dropped calls, connection problems, and cross talk (hearing other conversations)
- system administrator logon difficulties

Copyright © 2007-2009, Nortel Networks

- alert icons on the Maintenance screen

Alarm Monitor

Use the Alarm Monitor to investigate one or more alarms that require that attention of a administrator.

About alarms

Alarms are warnings generated by events. Alarms communicate the same information as events. However, alarms are reported in the Alarm Monitor instead of the Event Browser, and are managed differently than events:

- Alarms appear in the Alarm Monitor only for minor, major, and critical events (not information events). The Event Browser can report all events, depending on filtering criteria defined in the Event Browser.
- The first time an event occurs, it generates an alarm that appears in the Alarm Monitor. If the same event continues to occur, a new alarm is not generated. Instead, the time and date assigned to the original generated alarm is updated.
- You can clear alarms from the Alarm Monitor, but the system does not clear the event that generated the alarm from the event log or the Event Browser.

Each alarm in the Alarm Monitor has Help text that often provides a solution to the problem. If the solution is not apparent, use the Event Browser or the Maintenance screen to further investigate the problem.

To investigate using the Alarm Monitor

Step	Action
1	Log on to CallPilot Manager.
2	Click System → Alarm Monitor. **Result:** The Alarm Monitor screen appears.

Copyright © 2007-2009, Nortel Networks

Figure 8
Alarm monitor screen

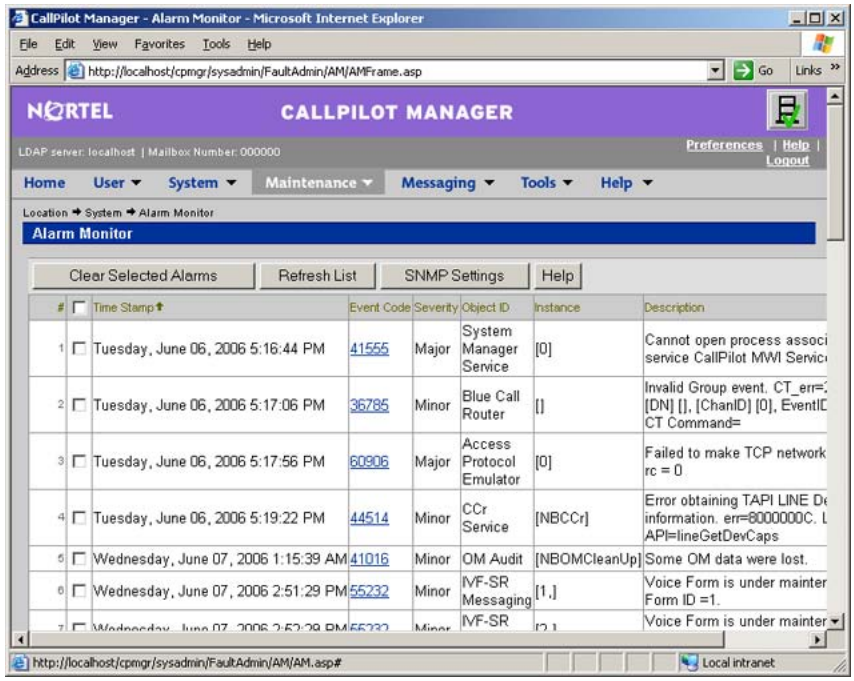

3 Click the Event Code for a critical, major or minor alarm.

Result: A description of the event appears in a new Web browser window.

4 Review the description and recovery action.

5 Repeat steps step and step 4 for more alarms, if necessary.

6 If the solution to the problem is not apparent, obtain the return code of the first event and continue the investigation by using the Event Browser (see "Event Browser" (page 46)).

—End—

Event Browser

Use the Event Browser to investigate a series of events that occurred around the time an alarm was raised. The event listing can help you determine the root cause of a problem.

Copyright © 2007-2009, Nortel Networks

About events

The Event Browser displays events that are recorded in the server log. Each event identifies the time the event occurred, the object that generated the event, and the cause of the event.

Events are classified as Information, Minor, Major, or Critical. By default, the Event Browser displays only the latest 100 critical events.

To investigate using the Event Browser

Step	Action
1	Log on to CallPilot Manager.
2	Click System → Event Browser. **Result:** The Event Browser screen appears.

Figure 9
Event browser screen

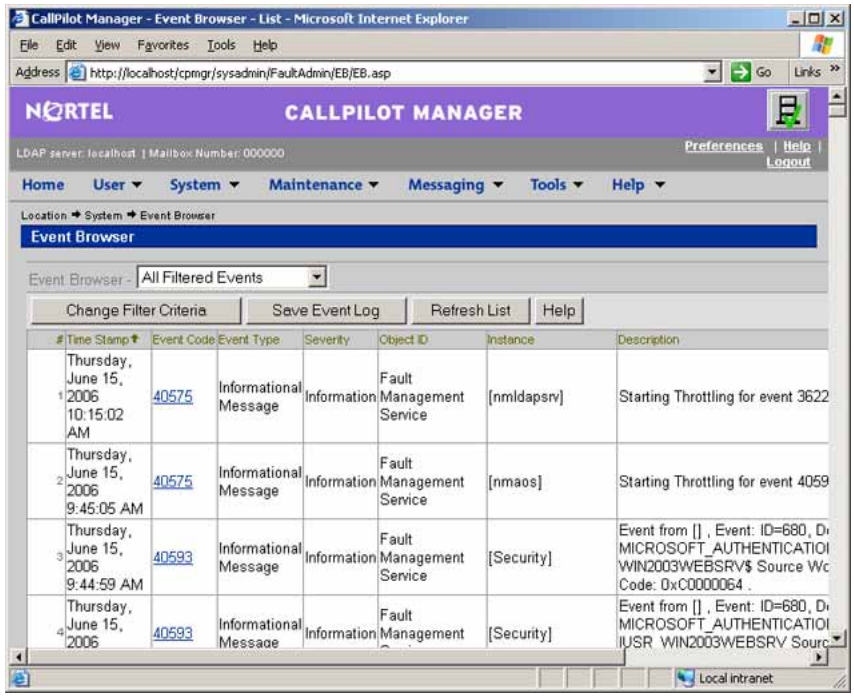

3	Click an event that appears to be related to the problem, or an event that occurred near the time the alarm was raised. **Result:** A description of the event appears in a new Web browser window.
4	View the description and recovery action.
5	Repeat steps step 3 and step 4 for more events, if necessary.

Copyright © 2007-2009, Nortel Networks

6 If the solution to the problem is not apparent, contact your Nortel technical support representative.

Note: For information about how to use the Event Browser, see the CallPilot Manager online Help.

—End—

Channel and Multimedia Monitors

The Channel Monitor shows the status of call channels. The call channels are the connections between the server and the switch that carry the call signals to CallPilot.

The Multimedia Monitor shows the status of multimedia channels. The multimedia channels are the DSP ports that process the calls. They are the voice, fax, and speech-recognition channels.

Disabling call channels

If you must take the CallPilot system out of service to perform software or hardware maintenance, Nortel recommends that you disable all call channels first. There are two ways to disable the call channels:

- Courtesy stop the channels (preferred method).

  After you courtesy stop call channels, CallPilot waits until the channels are no longer active before disabling them, instead of suddenly terminating active calls.

- Stop the channels.

  When you stop channels, you suddenly disable them and terminate all active calls.

The Maintenance screen

Use the Maintenance screen in CallPilot Manager to do the following:

- Obtain general information about components.
- View component states.
- Start and stop components.
- Run integrated diagnostic tests.
- View the results of the last diagnostic test run against a component.

Copyright © 2007-2009, Nortel Networks

What the Maintenance screen provides

The Maintenance screen identifies the server platform and switch connectivity type. This screen also provides a tree, which when expanded, lists the physical and logical hardware components down the left side of the screen. To list the server hardware components, click the plus sign (+) at the top of the tree. To list the subcomponents for each component, click the plus sign (+) beside the component.

> ***Note:*** The components that are listed on the Maintenance screen are based on the CallPilot server type and the switch that is connected to CallPilot. The examples in this chapter are for illustration purposes and can appear differently on your system.

Figure 10 "Example of partially expanded tree for 600r" (page 49) shows a partially expanded tree for the 600r server.

Figure 10
Example of partially expanded tree for 600r

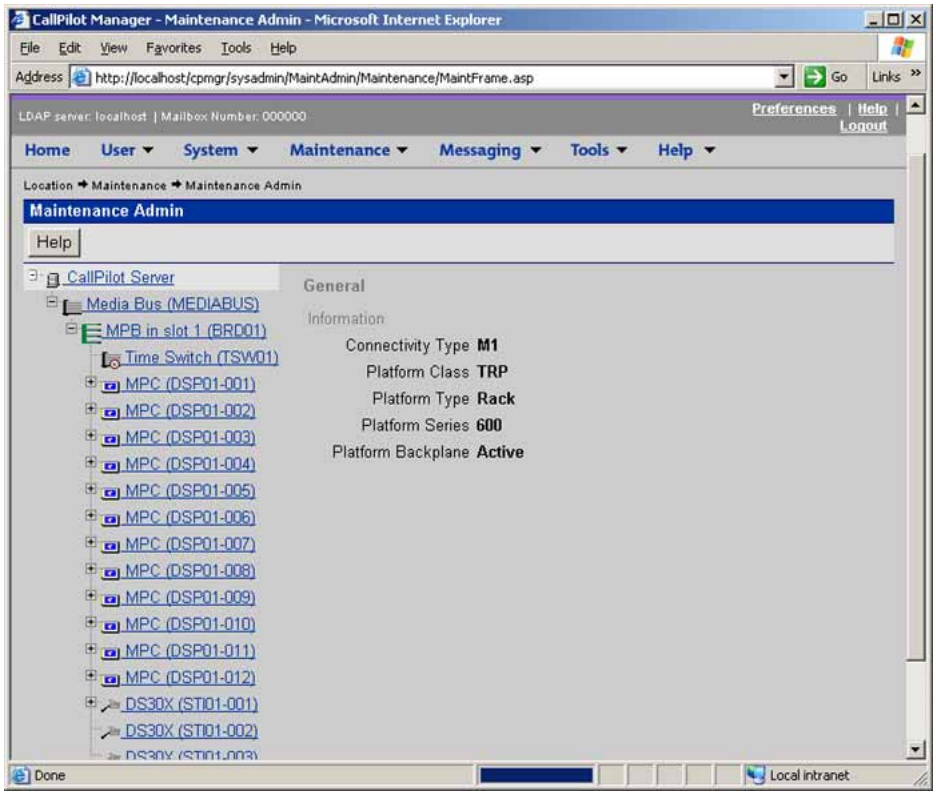

After you click a component, the screen refreshes to show the details about that component. Details are divided into the sections described in the following table.

Copyright © 2007-2009, Nortel Networks

Table 15
Component sections

Section	Description
General	This section shows general technical information about the selected component and typically includes the following details: • the name, class, type, series, or version of a component • various capabilities of a component (for example, whether a component is removable) ***Note:*** This section does not appear for all components.
Maintenance	This section shows the state of the selected component. Use this section to start and stop a component before running a diagnostic test. This section appears only for components on which you are allowed to perform maintenance administration. For more information about working with component states, see the following sections: • "Viewing component states" (page 51) • "Starting and stopping components" (page 53)
Diagnostics	Use the Diagnostics section to run one or more diagnostic tests, or to view the results of the last diagnostic tests that were run on the selected component. This section appears only for components on which you are allowed to run diagnostics. For more information about running diagnostics, see the following sections: • "Running integrated diagnostics" (page 56) • "Viewing the last diagnostic results" (page 58)

Maintenance activities for each component

The following table identifies the maintenance activities you can perform for each component listed in the component tree.

Copyright © 2007-2009, Nortel Networks

Table 16
Maintenance activities

Component	Start, stop?	Courtesy stop?	Diagnostics available?	Replaceable?
Media Bus	Yes	No	No	No
MPB96 board	Yes	No	Yes	Yes
Time switch	No	No	No	No
DSPs (embe dded on MPB boards)	Yes	No	Yes	embedded: No
Multimedia channels	Yes	Yes	Yes	No
Call channels	Yes	Yes	No	No
DS30X link	Yes	No	No	No

Note: The MGate card and DS30X cable are replaceable. If you are having problems with the DS30X link, determine if either one or both of these items are causing the problem and need to be replaced.

Viewing component states

View a component state to determine the general condition of the component, including whether the component is disabled or off duty. The component state is shown in the Maintenance section of the Maintenance screen.

Component states

You can determine the state of a component by looking at the State box in the Maintenance section of the GUI tool.

State	Description
Active	The component is working and currently involved in processing a call.
Disabled	The diagnostic failed.
Idle	The component is working but not currently involved in processing a call.
InTest	A diagnostic is running on the resource or device.
Loading	The component is starting, which takes it out of the Off Duty state. This state occurs quickly and is immediately followed by Idle.

Copyright © 2007-2009, Nortel Networks

State	Description
Local (Red) Alarm	A Receive Loss of Synchronization error occurred on incoming data over a T1 link and lasted more than 2.5 seconds. This condition exists until synchronization is recovered and remains recovered for 12 seconds.
No resources	The hardware required for the component to operate is not installed or is not operating properly.
Not Configured	The device is not configured in CallPilot. For example, the system is not using a DSP because the device was not allocated in the Configuration Wizard.
Off Duty	The component has been stopped.
Remote Off Duty	The component has been taken out of service at the switch.
Remote (Yellow) Alarm	A red alarm exists at the receiving device. This alarm is sent by the receiving T1 device to CallPilot, and it remains in effect until the red alarm is cleared at the receiving device.
Shutting Down	The component is in the process of stopping. This state occurs quickly and is immediately followed by Off Duty.
Uninitiated	The call-processing component has not initialized the resource.

Alert icons

If one of the following icons appears next to a component in the tree, the component or one of its subcomponents is experiencing a problem.

Icon	Description
	A problem exists with a subcomponent of the selected component. Expand the tree to locate the subcomponent with the problem.
	A problem exists with the selected component.

To view the state of a hardware component

Step	Action
1	Log on to CallPilot Manager.
2	Click Maintenance → Maintenance Admin. **Result:** The Maintenance screen appears.

Copyright © 2007-2009, Nortel Networks

3 Click the plus sign (+) beside the CallPilot server to expand the component tree.

4 Continue clicking the plus sign (+) until the component with which you want to work is visible.

5 Click the hardware component with which you want to work.

Result: The Maintenance screen refreshes to show details about the component.

6 Scroll down to the Maintenance section.

7 View the state of the selected component in the State box.

—End—

Starting and stopping components

After you stop a component, you take it out of service and prevent it from operating. You must stop a component before you can replace it (if the component is replaceable) or run a diagnostic test on it.

To bring an out-of-service component back into service, you must start it.

Start and stop components from the Maintenance section on the Maintenance screen.

ATTENTION

Nortel recommends that, if possible, you courtesy stop a component. Courtesy stop is available only at the individual channel level.

To courtesy stop CallPilot, use the following:

- Multimedia Monitor—to courtesy stop a range of multimedia channels
- Channel Monitor—to courtesy stop a range of call (DS30X, also known as DS0) channels

Stop versus courtesy stop

The following two methods of taking a component out of service allow you to choose how active calls are affected.

Copyright © 2007-2009, Nortel Networks

Courtesy stop

A courtesy stop takes the component out of service only after the component completes processing the active call.

- If the component is currently processing a call, the call is not dropped; the component remains active until the call is finished.
- If the component is not currently in use, the component is taken out of service immediately.

Courtesy stop is the preferred method for taking a component out of service.

Stop

A stop takes the component out of service immediately, regardless of whether the component is currently processing calls. All active calls are dropped. Typically, you perform a stop only when severe problems that are affecting a large number of incoming calls occur, or if your organization determines a special need for it.

Components that can be started and stopped

Only the following components can be started and stopped.

Note: If you want to start or stop more than one or two multimedia (DSP) or call (DS30X) channels, use the Multimedia Monitor or Channel Monitor.

Component	Effect of stopping
Media Bus	Takes all call-processing resources out of service.
MPB board	Takes all call-processing resources on the selected board out of service.
Time switch	You cannot perform maintenance administration on the time switch.
Multimedia channel	Takes the selected Multimedia Channel out of service.
Channels	Takes the selected DS30X channel out of service.
DS30X link	Takes the selected DS30X link out of service.

To start or stop a component

Step	Action
1	Log on to CallPilot Manager.
2	In CallPilot Manager, click Maintenance → Maintenance Admin. **Result:** The Maintenance screen appears.
3	Click the plus sign (+) beside the CallPilot server to expand the component tree.

Copyright © 2007-2009, Nortel Networks

4 Continue clicking the plus sign (+) until the component with which you want to work is visible.

5 Click the hardware component that you want to start or stop.

Result: The Maintenance screen refreshes to show details about the component.

6 Scroll down to the Maintenance section.

7 Click Courtesy Stop or Start as required.

Button	Description
Start	If the selected component is out of service, click this button to put it into service.
Courtesy Stop	Click this button to take the selected component out of service. CallPilot waits for calls to complete before disabling the component. **ATTENTION** If you are courtesy stopping all components (that is, you are taking the entire system down), ensure that you inform all administrators, desktop messaging users, and Web messaging users so that they can log off their sessions before you proceed. The system asks you to confirm the courtesy stop. If you click OK, the component is put out of service after all calls are finished.
Stop	Click this button to take the selected component out of service immediately. All calls that are in progress are disconnected immediately. **ATTENTION** If you are stopping all components (that is, you are taking the entire system down), ensure that you inform all administrators, desktop messaging users, and Web messaging users so that they can log off their sessions before you proceed.

—End—

Copyright © 2007-2009, Nortel Networks

Running integrated diagnostics

Run diagnostic tests from the Diagnostics section on the Maintenance screen in the following circumstances:

- You want to ensure that a component is operating properly after installing or reinstalling it.
- The CallPilot server is having trouble processing incoming calls and you are hoping that diagnostic results can tell you why.

  Problems include static, dropped calls, and cross talk (hearing another conversation).

Before you begin

ATTENTION

Take the component out of service before you run the diagnostic test. See "Starting and stopping components" (page 53).

Components that have diagnostic tests available

The following table identifies the components on which you can run diagnostics.

Component	Diagnostics available?	Replaceable?
Media Bus	No	No
MPB96 board	Yes	Yes
Time switch	No	No
Multimedia channels	Yes	No
Channels	No	No
DS30X link (cable)	Yes	Yes

Diagnostic tests available for each component

The diagnostic tests that are available for each component are listed in the Diagnostic section of the Maintenance screen. To view the list of diagnostic tests for a particular component, click the component in the component tree.

If a diagnostic test fails or cannot be performed

If a warning message appears, the diagnostic test cannot be performed because a prerequisite condition has not been met. If a diagnostic test fails, a message appears in a new browser window (see the example on screen step 9).

Copyright © 2007-2009, Nortel Networks

In both cases, check the Alarm Monitor to determine the reason and the appropriate action to take.

If the Alarm Monitor and Event Browser do not provide a solution to a hardware problem, you may need to replace or service a component. If the problem is with a component that is not replaceable because it is not a physical entity (such as the Time Switch), you must either replace its parent component or contact your Nortel technical support representative, depending on the component.

To run a diagnostic test

Step	Action

ATTENTION

In order to run a diagnostics test, the component must be out of service. Nortel recommends that you courtesy stop rather than stop a component if possible. For instructions, see "Starting and stopping components" (page 53).

1 Log on to CallPilot Manager.

2 Click Maintenance → Maintenance Admin.

Result: The Maintenance screen appears.

3 Click the plus sign (+) beside the CallPilot server to expand the component tree.

4 Continue clicking the plus sign (+) until the component with which you want to work is visible.

5 Click the hardware component for which you want to run diagnostics.

Result: The Maintenance screen refreshes to show details about the component.

6 Scroll down to the Maintenance section and ensure that the component is out of service.

7 Scroll down to the Diagnostics section.

8 Select the check box for each diagnostic that you want to run.

Note: If you want to run all of the diagnostics, select the Diagnostic Description check box at the top of the list.

9 Click Run.

Copyright © 2007-2009, Nortel Networks

Result: A new Web browser window appears and displays the progress and results of the diagnostics.

Note: The Diagnostic Results box in the Diagnostics section displays diagnostic results when you click Get Last Result.

—End—

Viewing the last diagnostic results

You can review the results of diagnostics by clicking the Get Last Results button for a component.

To view the last diagnostics results

Step	Action
1	Log on to CallPilot Manager.
2	Click Maintenance → Maintenance Admin. **Result:** The Maintenance screen appears.
3	Click the plus sign (+) beside the CallPilot server to expand the component tree.
4	Continue clicking the plus sign (+) until the component with which you want to work is visible.
5	Click the hardware component for which you want to run diagnostics. **Result:** The Maintenance screen refreshes to show details about the component.
6	Scroll down to the Diagnostics section.
7	Select the check box for each diagnostic for which you want to review results.
8	Click Get Last Result. **Result:** The results appear in the Diagnostic Results box with the following information: • diagnostic title • diagnostic result: pass or fail • the date and time the test completes

—End—

Copyright © 2007-2009, Nortel Networks

Working with the Multimedia Monitor

The Multimedia Monitor shows the status of multimedia channels. The multimedia channels are the DSP ports that process the calls. The channels can be voice, fax, or speech recognition channels.

To view or work with multimedia channel states

Step	Action
1	Log on to CallPilot Manager.
2	Click Maintenance → Multimedia Monitor. **Result:** The Multimedia Monitor screen appears, showing the channels associated with each DSP. **Figure 11** **Multimedia monitor screen** 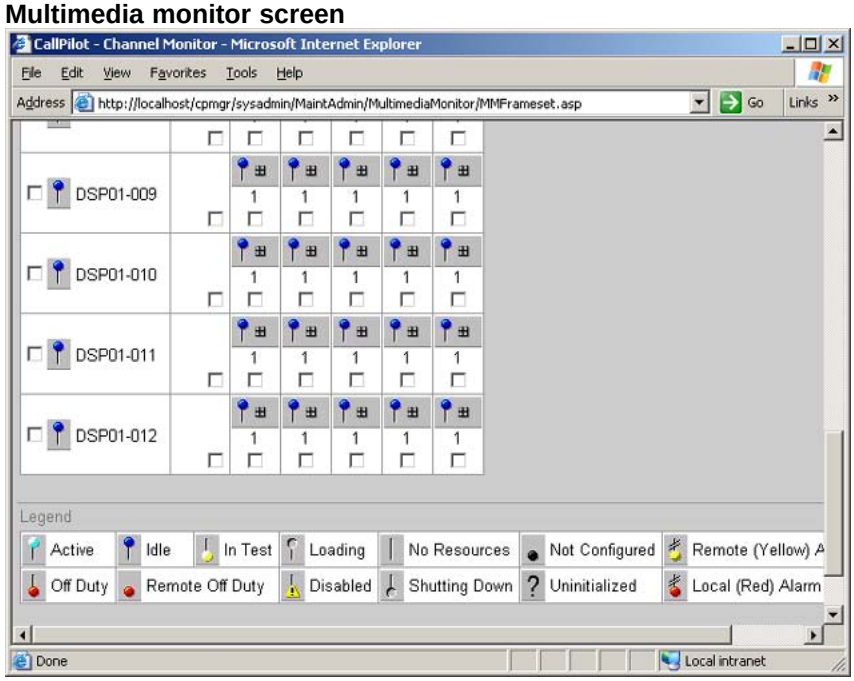 ***Note:*** For an explanation of the channel states, see the CallPilot Manager online Help.
3	Do one of the following:

Copyright © 2007-2009, Nortel Networks

If you want to stop or start	Then
all of the channels associated with a DSP	select the **Select All** check box to the left of the DSP that you want to stop or start. Repeat this step for each DSP.
only one or several channels that are associated with a DSP	select the check box for each channel that you want to stop or start.

4 Click Courtesy Stop or Start, as required.

Result: If you clicked Courtesy Stop or Start, you are asked to confirm the Courtesy Stop or Start. Click OK.

The selected channels change to off-duty or on-duty status, according to the action you chose.

Note: If the buttons are not available, wait a few seconds for the screen to refresh.

—End—

Working with the Channel Monitor

The Channel Monitor shows the status of call channels. The call channels are the connections between the server and the switch that carry the call signals to CallPilot.

To view or work with call channel states

Step	Action
1	Log on to CallPilot Manager.
2	Click Maintenance → Channel Monitor. **Result:** The Channel Monitor screen appears, showing the DS30X (also known as DS0) channels associated with each DS30X link.

Copyright © 2007-2009, Nortel Networks

Figure 12
Channel monitor screen

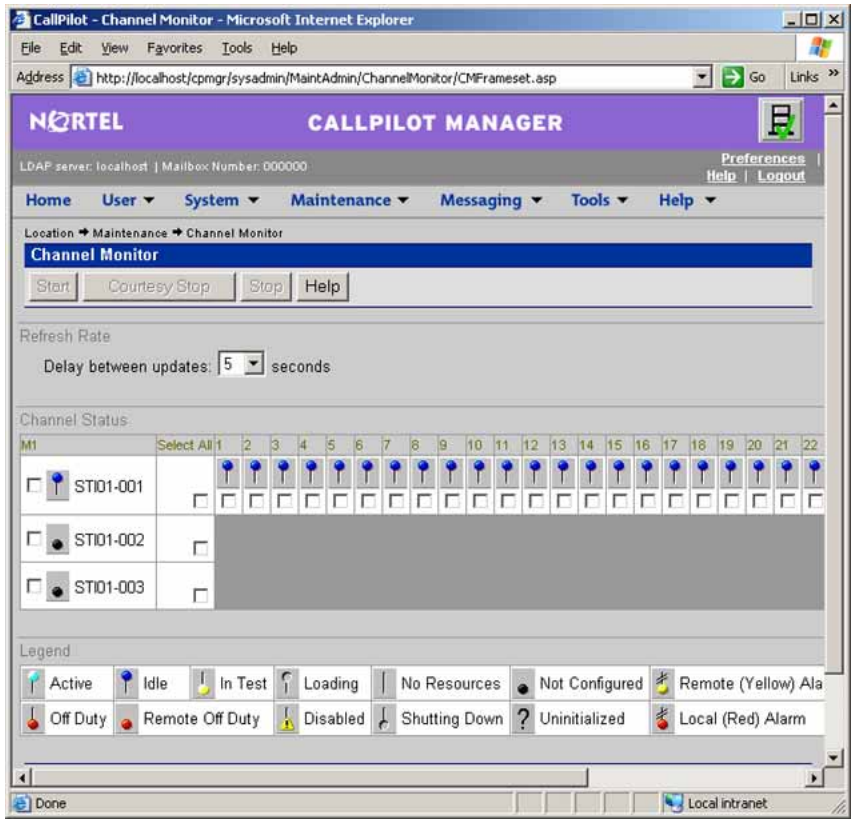

Note: For an explanation of the channel states, see the CallPilot Manager online Help.

3 Do one of the following:

If you want to stop or start	Then
all of the channels associated with a DS30X link	select the **Select All** check box to the left of the DS30X link that you want to stop or start. Repeat this step for each DS30X link.
only one or several channels that are associated with a DS30X link	select the check box for each channel that you want to stop or start.

4 Click Courtesy Stop or Start, as required.

Copyright © 2007-2009, Nortel Networks

Result: If you clicked Courtesy Stop or Start, you are asked to confirm the Courtesy Stop or Start. Click OK.

The selected channels change to off-duty or on-duty status, according to the action you chose.

Note: If the buttons are not available, wait a few seconds for the screen to refresh.

—End—

Copyright © 2007-2009, Nortel Networks

Chapter 6
Using CallPilot system utilities

In this chapter

"Overview" (page 63)

"Diagnostics Tool" (page 64)

"PEP Maintenance utility" (page 65)

"Session Trace" (page 66)

"CallPilot System Monitor" (page 68)

"CPTrace Tool" (page 72)

"Backup Restore Tool" (page 73)

Overview

The following table lists the CallPilot system utilities.

Utility	Description
Diagnostics Tool	Allows CallPilot startup diagnostics to be enabled or disabled (turned on or off).
PEP (Performance Enhancement Program) Maintenance	Displays a list of installed PEPs and enables PEP removal.
Session Trace	Displays detailed information about the activity in a user's mailbox and the state of the message waiting indicator (MWI).

Copyright © 2007-2009, Nortel Networks

Utility	Description
CallPilot System Monitor	Displays the following information: • the status of all CallPilot channels • the status of all CallPilot services ***Note:*** This status is more accurate than the status that Windows provides in the Services Control Panel. • particulars about the CallPilot System, such as names, keycodes, serial numbers, IP addresses, and system numbers
CPTrace Tool	Gathers trace statements from the LDAP Directory Synchronization, CallPilot Player, and My CallPilot.
Backup Restore Tool	Use this utility to perform full system backups and restores of all critical data, including messages and configuration information.

Accessing the system utilities

All CallPilot utilities are accessible from the CallPilot server in the Start → Programs → CallPilot → System Utilities menu.

Diagnostics Tool

The Diagnostics Tool lets you enable or disable CallPilot startup diagnostics. CallPilot startup diagnostics automatically identify hardware problems that can exist when the system and its services are started. After you disable startup diagnostics, you can save time during system maintenance operations where restarts or call processing services restarts are required. Three steps are recommended:

- Use the Diagnostics Tool to turn off CallPilot startup diagnostics.
- Perform system maintenance.
- Use the Diagnostics Tool to turn on CallPilot startup diagnostics.

To access the Diagnostics Tool

Step	Action
1	On the Windows desktop, click Start → Programs → CallPilot → System Utilities → Diagnostic Tool. **Result:** The Diagnostics Tool window appears.

—End—

Copyright © 2007-2009, Nortel Networks

To enable startup diagnostics

Step	Action
1	From the Diagnostics Tool window, select Configuration → Maintenance Startup Diag → Enable.

—End—

To disable startup diagnostics

Step	Action

ATTENTION

Nortel recommends that you leave the startup diagnostics turned on. After you disable CallPilot startup diagnostics, CallPilot is prevented from automatically identifying hardware problems that can exist after the system and its services are started (for example, DSP, TimeSwitch, or MediaBus).

1	On the Diagnostics Tool window, select Configuration → Maintenance Startup Diag → Disable.

—End—

PEP Maintenance utility

The PEP Maintenance utility displays a list of all installed PEPs on the server and lets you uninstall PEPs. For information about installing or uninstalling PEPs, see the *Installation and Configuration Task List* (NN44200-306).

To access the PEP Maintenance utility

Step	Action
1	From the Windows desktop, click Start → Programs → CallPilot → System Utilities → PEP Maintenance Utility. **Result:** The DMI Viewer window appears.

—End—

Copyright © 2007-2009, Nortel Networks

To view a list of all installed PEPs

Step	Action
1	Click the component for which you want to display the PEP list.
2	Click Show PEPs. **Result:** A list of all installed PEPs appears in the left pane.
3	If you want to review the readme file associated with a PEP, click the PEP, and then click Read. **Result:** The readme file appears in Notepad.

—End—

Session Trace

The Session Trace tool displays detailed information about the activity in a user's mailbox and the state of the message waiting indicator (MWI). The session information includes:

- voice messaging
- call answering
- express messaging activity (messages composed and sent, or left in a mailbox)
- the number of messages played or unplayed at the beginning, middle, and end of a session
- the number of deleted read messages
- the number of deleted unread messages
- messages and personal distribution lists restored into a mailbox
- the last change to the MWI (turned on or off, or untouched)

This session information lets an administrator or technician study the state of a user's mailbox and the MWI, and use that information to follow up on any user complaints. For example, a user can complain that the MWI is on, but no voice messages are in the mailbox when the user logs on. The session information can tell the administrator why the MWI was turned on.

To access the session trace tool

Step	Action
1	From the Windows desktop, click Start → Programs → CallPilot → System Utilities → Session Trace Tool.

Copyright © 2007-2009, Nortel Networks

Result: The MCE Session Trace window appears.

—End—

To find a session

Step	Action
1	From the Session Type drop-down menu, choose the type of session. To display a list of all session types, select All Session Types.
2	Enter as much information as you can in the search criteria boxes to identify the session you want to view. To display a list of all users for the selected Session Type, leave the search criteria boxes blank.
3	Click Search to initiate the search. a. If you did not enter any user information, a list of users matching the Session Type appears at the bottom of the window. To select a user from the list, double-click the user name to display session-type information. b. If you selected All Session Types for a user, the session-type information appears to the right of the window.
4	Double-click the session type to display the session information. **Result:** The session-type information appears at the bottom of the window. The following example shows Call Answering session-type information.

Copyright © 2007-2009, Nortel Networks

Figure 13
Call answering session

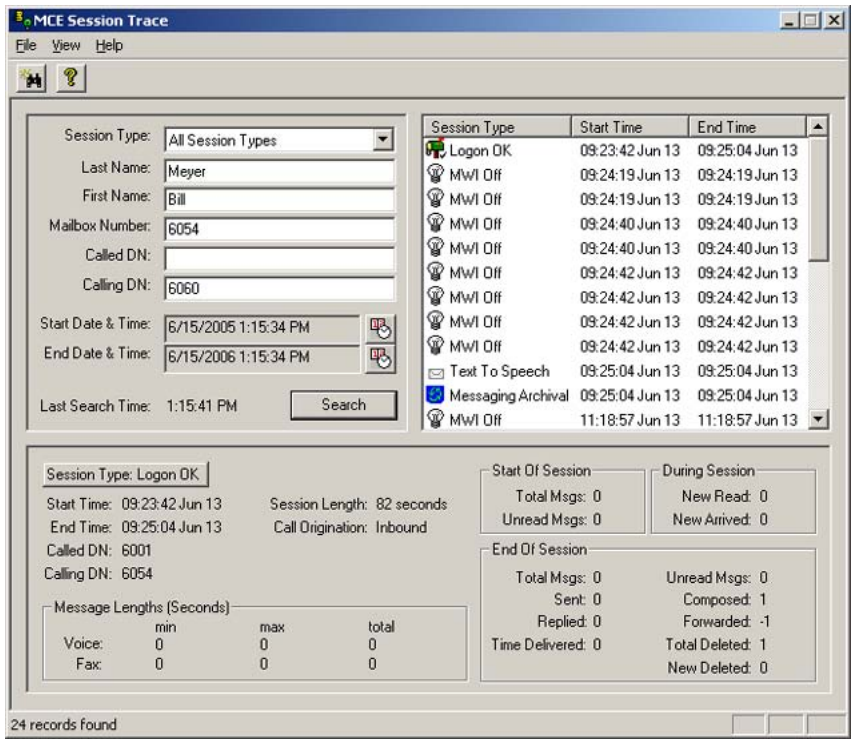

—End—

CallPilot System Monitor

The System Monitor consists of three tabs, as described in the following table.

Table 17
System Monitor tabs

Tab	Description
Channel Monitor	Shows the status of all CallPilot services, multimedia channels, and call channels (DS30X channels).
System Info	Displays details about the CallPilot System, such as features purchased, keycode, serial number, and CallPilot server IP addresses.
Legend/Help	Provides a description of icons and terminology displayed in the System Monitor window.

Copyright © 2007-2009, Nortel Networks

System Monitor is a nondestructive tool that does not alter the behavior of any CallPilot components.

To access the CallPilot System Monitor

Step	Action
1	On the Windows desktop, click Start → Programs → CallPilot → System Utilities → System Monitor. **Result:** The CallPilot System Monitor window appears. By default, the Channel Monitor tab appears on top. Click the other tabs to view the information about those tabs.

—End—

Channel Monitor tab

The following is an example of the Channel Monitor tab when connected to a Meridian 1.*

Figure 14
Channel Monitor with M1.

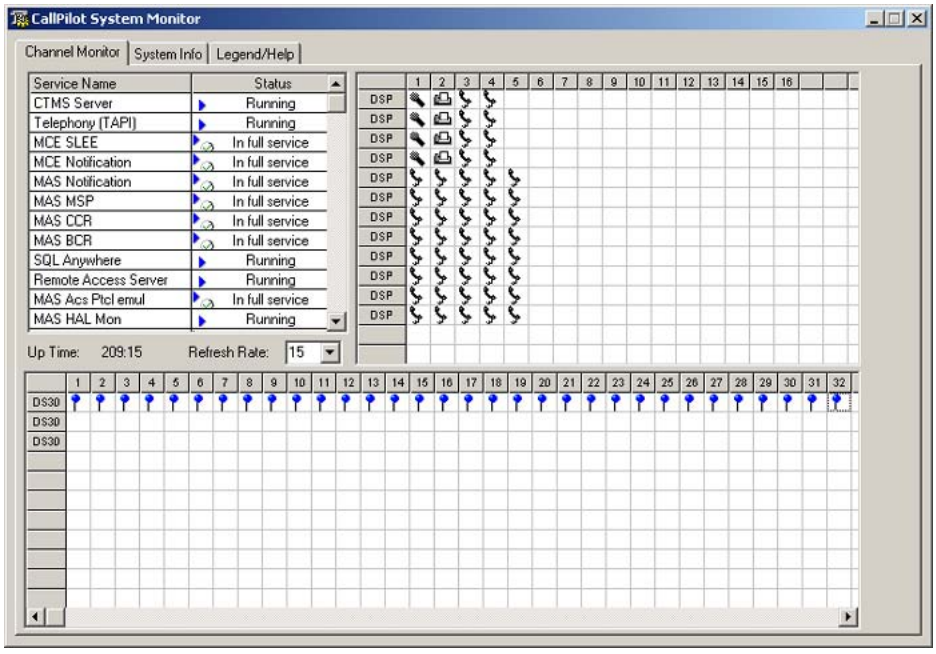

Copyright © 2007-2009, Nortel Networks

CallPilot services

The Service Name pane shows the status of services from a CallPilot perspective. The status shown in the Windows Services Control Panel can state that a service is running, but it may not actually be fully running or in service from a CallPilot perspective. Refer to the System Monitor tool Channel Monitor tab for the true status.

The services listed under Service Name are either running or in full service when CallPilot is functioning optimally. If any CallPilot services are stopped, investigate the cause. Call Nortel technical support for assistance.

> ***Note:*** Although Nortel recommends that you investigate any stopped services, some services are not critical. CallPilot can continue to handle call processing even with some services stopped.

The critical services that are required for basic CallPilot call answering are listed in the following table. For your reference, the equivalent names as they appear in the Windows Control Panel are also listed.

CallPilot System Monitor	Windows Control Panel equivalent
CTMS Service	CTMS Server
Telephony (TAPI)	Telephony Service
MCE SLEE	CallPilot SLEE Service
MCE Notification	CallPilot MWI Service
MAS Notification	CallPilot Notification Service
MAS CCR	CallPilot Call Channel Router
MAS BCR	CallPilot Blue Call Router
SQL Anywhere	Adaptive Server Anywhere—DB_SQL ANY
MAS MltmediaCache	CallPilot Multimedia Cache
MAS MltmediaVol1	CallPilot Multimedia Volume 1
MAS MltmediaVol102 (TRP only)	CallPilot Multimedia Volume 102 (TRP only)
MAS MltmediaVol103 (TRP only)	CallPilot Multimedia Volume 103 (TRP only)
MAS Rsrc. Pckg. 1	CallPilot Resource Package1

DSPs

In the DSP pane, each DSP is represented in a separate row. Each box in the row is one DSP channel or multimedia channel. Click the Legend/Help tab to view descriptions of the multimedia channel icons.

Copyright © 2007-2009, Nortel Networks

Your 600r server has one MPB96 board. The MPB96 board has 12 DSP sections embedded on the board.

DS30X links

In the DS30X link pane, each DS30 row represents a separate DS30X link (also referred to as a DS30 link). Each box in the row represents one DS30X channel.

The DS30X links connect the CallPilot server to the MGate card in the Meridian 1 switch or Communication Server 1000* system. The DS30X link to the switch is supported by a cable connection.

System Info tab

Figure 15 "System info tab" (page 71) shows an example of the System Info tab.

Figure 15
System info tab

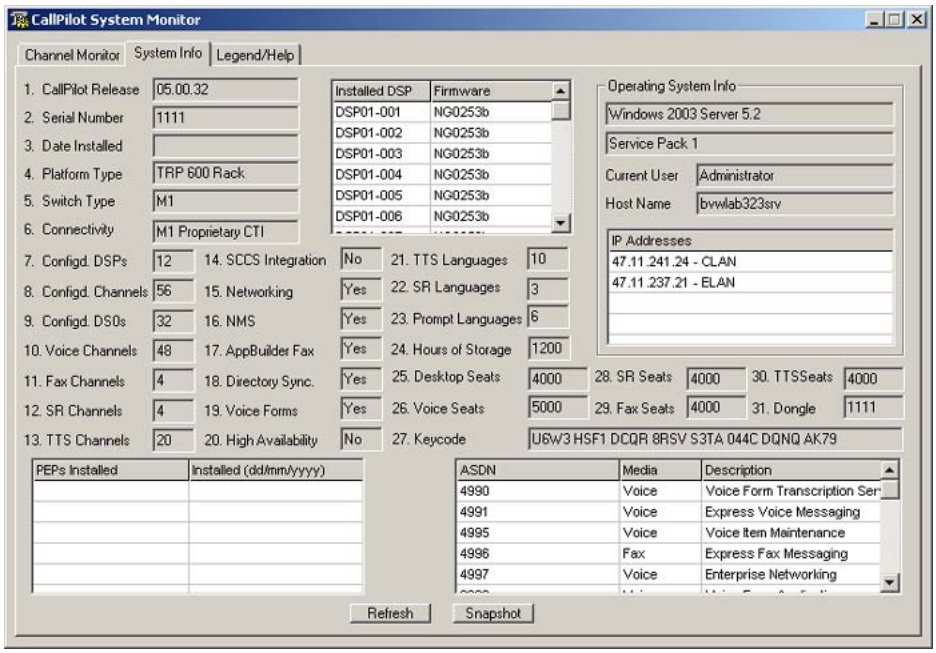

The numbered items provide information about the features purchased. Information about the underlying operating system is provided in the top right corner, including the server IP addresses.

PEP information and configured Service DNs are listed in the bottom part of the window.

Copyright © 2007-2009, Nortel Networks

Legend/Help tab

Figure 16 "Legend/Help tab" (page 72) shows an example of the Legend/Help tab. Consult this window for descriptions of the icons found in the Channel Monitor tab.

Figure 16
Legend/Help tab

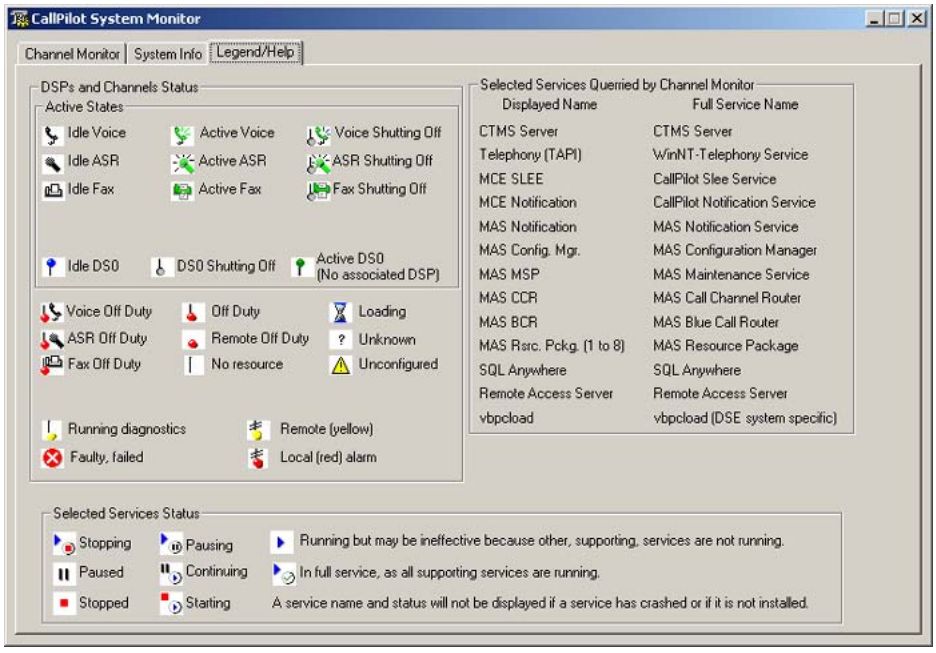

CPTrace Tool

CP Trace Tool is a utility used to gather trace statements from the Lightweight Directory Access Protocol (LDAP) Directory Synchronization operation. CP Trace can also be used to gather trace statements from the CallPilot Audio Player and My CallPilot, if these applications are resident on the CallPilot server, The following procedure describes how to gather trace statements from LDAP Directory Synchronization only.

To access CPTrace Tool

Step	Action
1	From the Windows desktop, click Start → Programs → CallPilot → System Utilities → CPTrace Tool. **Result:** The CPTrace window appears.

Copyright © 2007-2009, Nortel Networks

Run the Directory Synchronization operation. As Directory Synchronization runs, statements appear in the CPTrace window. Save the contents of CPTrace by clicking Save As. Save the file with a filename: CPTrace.rtf. Nortel recommends that you e-mail the CPTrace.rtf file to a Nortel support representative for analysis.

—End—

Backup Restore Tool

Use the CallPilot Backup and Restore Tool to backup and restore all critical data, including messages and configuration information. This includes all data that can be obtained by running the various archives. The operating system and CallPilot software are not backed up.

Refer to the *CallPilot Software Administration and Maintenance Guide* (NN44200-600) for backup and restore procedures.

Copyright © 2007-2009, Nortel Networks

Copyright © 2007-2009, Nortel Networks

Chapter 7
Replacing basic chassis components

In this chapter

"Removing and replacing the front bezel" (page 75)

"Removing and replacing the server cover" (page 77)

"Removing and replacing the processor air duct" (page 78)

"Replacing the power supply" (page 80)

"Replacing a hard drive" (page 82)

"Replacing the front fan assembly" (page 84)

"Replacing the MPB96 card" (page 87)

"Replacing the DVD-ROM/CDRW drive" (page 90)

"Replacing memory DIMMs" (page 93)

"Replacing the software feature key" (page 94)

Removing and replacing the front bezel

Remove the front bezel to install, service, or hot swap the hard drive and the DVD-ROM drive.

Note: Because the 600r has a single hard drive, you do not have the ability to hot swap drives. If you remove the single hot swap drive live, the server does not function. You must swap disk drives with the power off.

Copyright © 2007-2009, Nortel Networks

To remove the front bezel

Step	Action

1 **Figure 17**
Front bezel

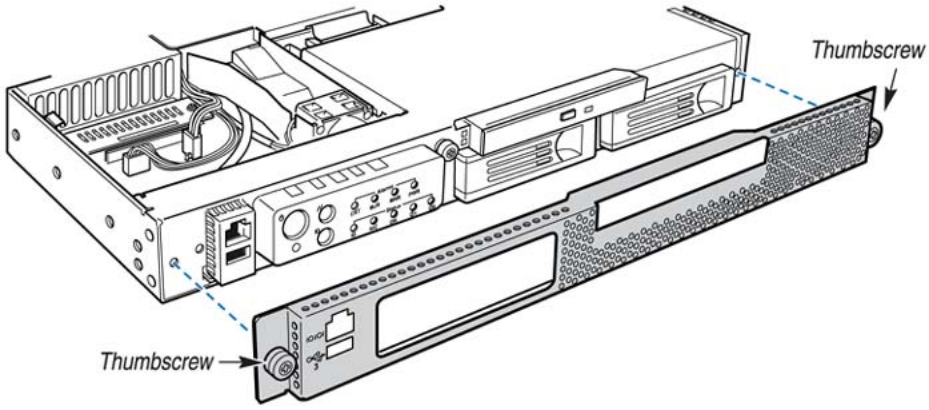

Loosen the thumbscrew fasteners (A) on both sides of the front bezel. You cannot remove the screws from the front bezel. For more details, see Figure 17 "Front bezel" (page 76).

> **CAUTION**
> **Risk of equipment damage**
> Support the front bezel while loosening the thumbscrew fasteners, as the front bezel is not held onto the front panel with another mechanism.

2 Hold the front bezel by the thumbscrew fasteners and lift the bezel towards you. Place it in a secure location while you service the server.

—End—

To replace the front bezel

Step	Action

After the CallPilot server maintenance is complete, replace the front bezel.

1 Align the thumbscrew fasteners on the front bezel with the threaded holes in the front panel.

2 Tighten the thumbscrew fasteners.

Copyright © 2007-2009, Nortel Networks

—End—

Removing and replacing the server cover

Remove the server cover if you need to service the interior of the server.

To remove the server cover

Step	Action

DANGER
Risk of electric shock
High current inside the chassis can cause severe injury.

CAUTION
Risk of equipment damage
Take precautions to protect internal components. Electrostatic discharge (ESD) can damage boards and make them unusable.

1. Power down the server, unplug all peripheral devices and Ethernet cables, and disconnect the AC power.
2. Attach the ESD strap to your wrist and attach the other end to a known grounded connection.
3. While holding in the blue button at the top of the chassis, slide the top cover back until it stops.

Copyright © 2007-2009, Nortel Networks

Figure 18
Server cover

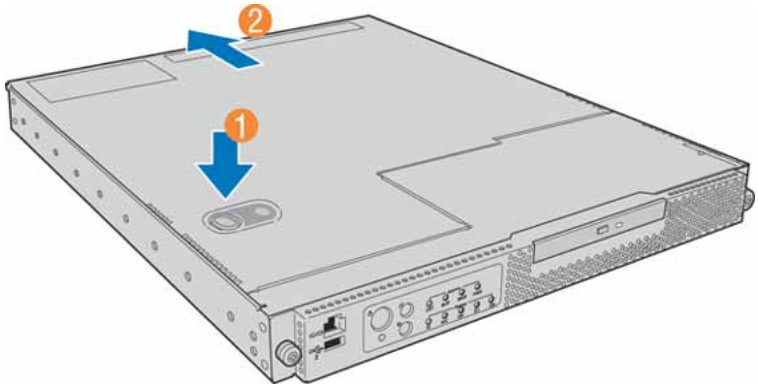

4	Lift the cover straight up to remove it from the platform.

—End—

To replace the server cover

Step	Action
1	Place the cover over the chassis so that the side edges of the cover sit just inside the chassis sidewalls. The front of the cover is about an eighth of an inch from the sheet-metal at the front of the chassis.
2	Press down slightly on the server cover behind the DVD-ROM drive area and slide the cover forward until it clicks into place.
3	Plug in the peripheral devices and Ethernet cables, connect the AC power cords, and restart the server.

—End—

Removing and replacing the processor air duct

You must remove the air duct to access the processor assembly and the two system fans. Because the processor air duct channels the airflow within the chassis, reinstall the air duct before installing the server cover.

Requirements

You need a Phillips (cross head) screwdriver, #1 and #2 bits.

Copyright © 2007-2009, Nortel Networks

To remove the processor air duct

Step	Action
1	Power down the server, unplug all peripheral devices and Ethernet cables, and disconnect the AC power.
2	Attach the ESD strap to your wrist and attach the other end to a known grounded connection.
3	Remove the server cover. For more details, see "Removing and replacing the server cover" (page 77).
4	Remove the screw at the top of the air duct.

Figure 19
Processor air duct

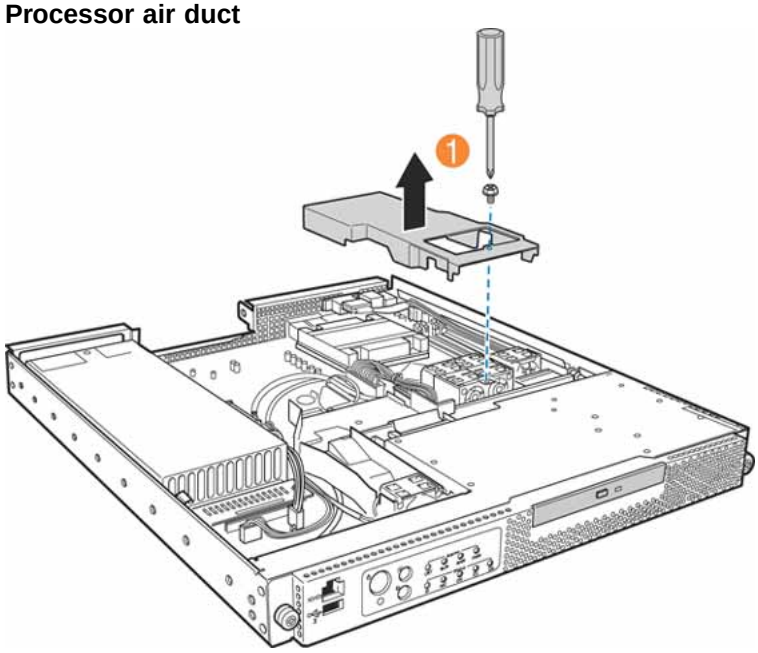

5	Lift the air duct from the server platform and store it in a safe location.

—End—

To replace the processor air duct

Step	Action
1	Place the processor air duct over the processor socket and two-fan assembly. Ensure that you do not pinch any wires beneath the edges of the air duct. For more information about how to place the

Copyright © 2007-2009, Nortel Networks

processor air duct in the server, see Figure 19 "Processor air duct" (page 79).

2 Tighten the screw at the front of the air duct. The top of the installed air duct must be flush with the top surface of PCI adapter assembly.

3 Replace the server cover. For more details, see "Removing and replacing the server cover" (page 77).

4 Take the ESD strap off.

5 Plug in the peripheral devices and Ethernet cables, connect the AC power cords, and restart the server.

—End—

Replacing the power supply

The 600r has only one power supply. You must power down the server to replace the power supply.

ATTENTION

Do not remove the power supply while the system is running. Power down the system and unplug the power supply before removing the power supply. After you power down the server, allow the power supply to cool for several minutes.

To replace the power supply

Step	Action

DANGER

Risk of electric shock

High current inside the chassis can cause severe injury.

1 After you power down the server, allow the power supply to cool for several minutes.

2 Remove the server cover. For instructions, see "Removing and replacing the server cover" (page 77).

3 Remove the PCI riser assembly. For instructions, see "Replacing the MPB96 card" (page 87).

Copyright © 2007-2009, Nortel Networks

4 Lift up the rear of the power supply until it clears the two half-circle stops at the rear of the power supply. See letters A and B in Figure 20 "Removing the power supply" (page 81).

5 While holding the rear of the power supply above the stops, push back at the front of the power supply to disconnect it from the power board. See (C) in Figure 20 "Removing the power supply" (page 81).

Figure 20
Removing the power supply

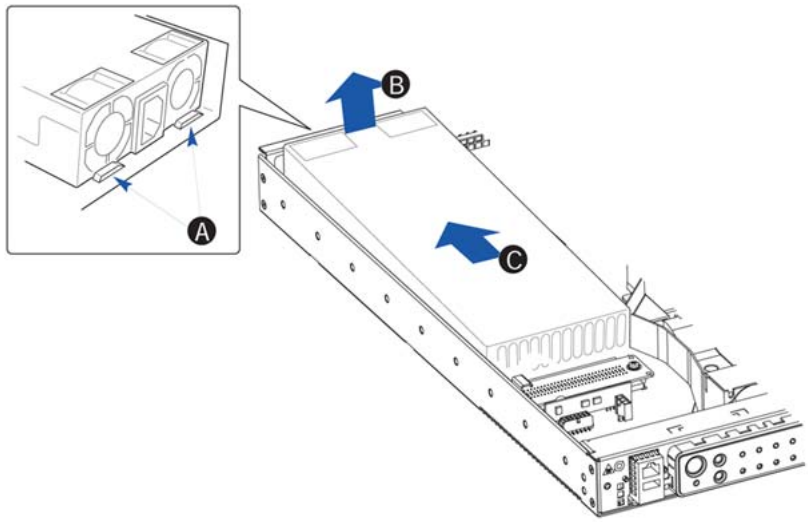

6 Lift the power supply from the chassis.

7 Insert the replacement power supply. Ensure that you insert the terminal block through the hole in the rear of the chassis. Move any cables away from where the power supply is inserted so that the cables are not pinched or damaged.

8 Plug the new power supply into the AC mains.

9 Lower the power supply into place. Ensure that the cables are not pinched under the power supply. For more details, see Figure 20 "Removing the power supply" (page 81).

10 Push firmly at the rear of the power supply to push the connector at the front of the power supply into the power board.

11 Install the PCI riser assembly. For instructions, see "Replacing the MPB96 card" (page 87).

12 Replace the connector cover over the completed connections.

Copyright © 2007-2009, Nortel Networks

13	Install the server cover. For instructions, see "Removing and replacing the server cover" (page 77).

—End—

Replacing a hard drive

The 600r server has one SCSI drive. You do not need to remove the server cover to add or replace a hard drive, but you must remove the front bezel.

ATTENTION

You must replace the hard drive with an identical unit or other Nortel-approved hard drive.

To replace a SCSI hard drive

Step	Action
1	Power down the server, unplug all peripheral devices and Ethernet cables, and disconnect the AC power.
2	Remove the front bezel. For more instructions, see "Removing and replacing the front bezel" (page 75).
3	Attach the ESD strap to your wrist and attach the other end to a known grounded connection.
4	Press in on the green latch on the front of the hard drive carrier as shown in the following diagram.

Copyright © 2007-2009, Nortel Networks

Figure 21
SCSI hard drive carrier

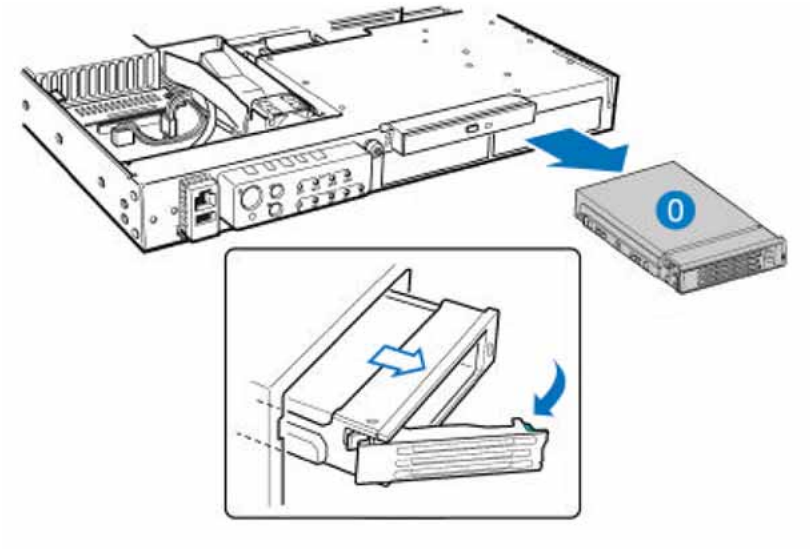

5 Pull out on the black lever to slide the carrier from the chassis.

6 Remove the four screws that attach the plastic retention device or the previously installed hard drive to the drive carrier. Two screws are at each side of the retention device or the hard drive. Store the plastic retention device for future use.

7 Remove the hard drive from the wrapper and place it on an antistatic surface.

8 Set any jumpers or switches on the drive according to the drive manufacturer's instructions.

9 With the drive circuit-side down, position the connector end of the drive so that the end is facing the rear of the drive carrier. For more details, see Figure 22 "Hard disk drive location in carrier" (page 84).

10 Align the holes in the drive with the holes in the drive carrier and attach the drive to the carrier with the screws that were attached to the plastic retention device.

Copyright © 2007-2009, Nortel Networks

Figure 22
Hard disk drive location in carrier

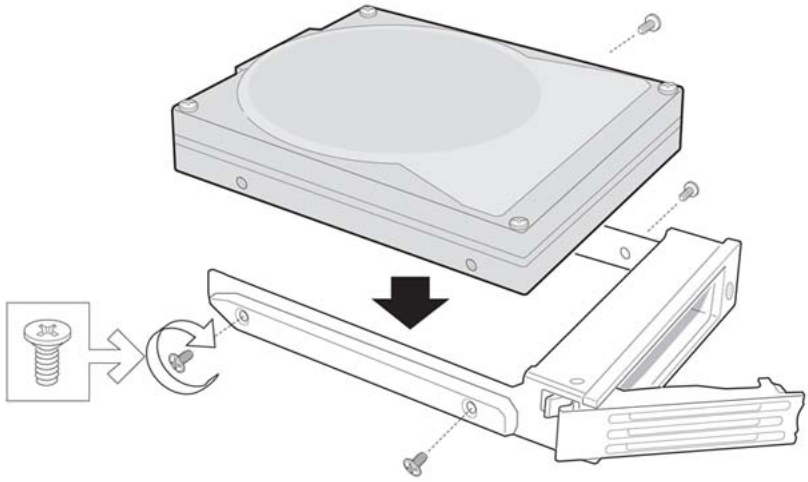

11 With the black lever in the fully open position, slide the drive assembly into the chassis. Insert the primary drive in the right bay. Ensure that the green latch at the front of the drive carrier is to the right. Do not push on the black drive carrier lever until the lever begins to close by itself.

12 When the black drive carrier lever begins to close by itself, push on it to lock the drive assembly into place.

13 Take off the ESD strap.

14 Replace the front bezel.

15 Plug in the peripheral devices and Ethernet cables, connect the AC power cords, and restart the server.

—End—

Replacing the front fan assembly

The front fan cooling assembly is not hot-swappable. You must power down the server and disconnect the assembly from the power supply.

Copyright © 2007-2009, Nortel Networks

When to replace the cooling fan assembly

After one of the cooling fans is not turning, the other fan rotates faster to maintain the same volume of air flow through the chassis. The hum of a cooling fan rotating faster is both louder and higher in pitch than normal and indicates that the assembly must be replaced. You cannot replace just one fan in the assembly.

To replace the front fan assembly

Step	Action
1	Power down the server, unplug all peripheral devices and Ethernet cables, and disconnect the AC power.
2	Attach the ESD strap to your wrist and attach the other end to a known grounded connection.
3	Remove the sever cover. For instructions, see "Removing and replacing the server cover" (page 77).
4	Remove the processor air duct. For instructions, see "Removing and replacing the processor air duct" (page 78).
5	Remove the captive screw that attaches the front fan assembly to the chassis. For details, see (A) in Figure 23 "Front fan assembly" (page 86).
6	Lift the left side of the fan assembly. For details, see B in Figure 23 "Front fan assembly" (page 86).
7	Pull the fan assembly to the left to disengage the hook that holds the right side of the fan assembly. For details, see C in Figure 23 "Front fan assembly" (page 86).
8	Remove the fan assembly from the chassis. For ease of access to some of the cable connections, lift the assembly from the installed location before disconnecting the cables.
9	Disconnect the fan connectors from the front panel I/O board. Make note of the order the fans are plugged into the board.

Copyright © 2007-2009, Nortel Networks

Figure 23
Front fan assembly

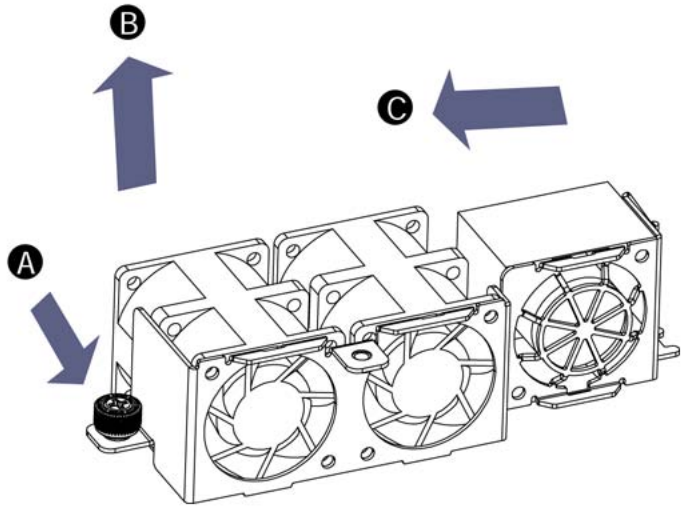

10 Disconnect the front fan assembly cables from the server board.

11 Connect the following cables between the replacement front fan assembly and the server board.

Note: Because some of the connections are difficult to reach after you install the fan assembly, Nortel recommends that you connect the following cables first:

a. Left fan in the fan assembly to the Sys Fan 1 connector. Use the short cable.

b. Center fan in the fan assembly to the Sys Fan 2 connector. Use the short cable.

c. Right fan in the fan assembly to the Sys Fan 6 connector. (Left side of board). Route the cable next to DIMM socket 1A (DIMM socket nearest the processor socket), then across the center of the board, in front of the processor socket.

d. Center fan in the fan assembly to the Sys Fan 3 connector. (Rear of board). Route the cable next to DIMM socket 1A (DIMM socket nearest the processor socket), then to the right side of the processor socket.

e. Left fan in the fan assembly to the Sys Fan 4 connector. (Left side of board). Route the cable next to DIMM socket 1A (DIMM socket nearest the processor socket), then to the right side of the processor socket.

Copyright © 2007-2009, Nortel Networks

12 Lower the right side of the fan assembly into place so that it catches under the hook. Use caution to ensure no cables are pinched beneath the fan assembly.

13 Set the left side of the fan assembly into place.

14 Tighten the captive screw.

15 Connect the fan cables to the correct fan connectors on the front panel I/O board. The fan connectors are labeled on the front panel I/O board. Look for FAN SYS labels.

16 Replace the processor air duct. For instructions, see "Removing and replacing the processor air duct" (page 78).

17 Replace the server cover. For instructions, see "Removing and replacing the server cover" (page 77).

18 Take off the ESD strap.

19 Plug in the peripheral devices and Ethernet cables, connect the AC power cords, and restart the server.

—End—

Replacing the MPB96 card

There is one MPB96 card in your server.

CAUTION
Risk of electrical damage

- Wear an antistatic ESD wrist strap when handling cards or boards, or when working inside the server.
- Do not touch the components or gold-edged connectors of the cards.
- Place the card on an antistatic surface until you are ready to install it.

The MPB96 card is not hot-swappable and you must power down the system before adding or replacing the card.

Requirements

- Phillips (cross head) screwdriver, #1 and #2 bits
- Replacement MPB96 card

Copyright © 2007-2009, Nortel Networks

- Electrostatic Discharge (ESD) grounding strap

There are two versions of MPB96 cards; the NTRH40AA and the NTRH40CA. The following table provides a comparison of the two cards. If you are replacing an NTRH40AA card with an NTRH40CA card, make sure your CS 1000 or Meridian 1 has NTRB18DA MGate cards, and that you have the correct cables. The NTRH40CA MPB96 does not work with NTRB18CA MGate cards.

MPB96 version	Description	Connected to the CS 1000 by
NTRH40AA	Has a single DB-44 faceplate connector	An NTRH2014 DS30X cable.
NTRH40CA	Has three RJ-45 faceplate connectors	Up to three standard CAT5e (or better) RJ-45 connectorized Ethernet-type DS30 cables For more information about these cables, see *CS 1000 and CallPilot Server Configuration Guide* (NN44200-312) or *Meridian 1 and CallPilot Server Configuration Guide* (NN44200-302).

To replace the MPB96 card

Step	Action
1	Turn off the server, unplug all peripheral devices and Ethernet cables, unplug the DS30X cable or DS30 cables, and disconnect the AC power.
2	Attach the ESD strap to your wrist and attach the other end to a known grounded connection.
3	Remove the server cover. For instructions, see "Removing and replacing the server cover" (page 77).
4	Loosen the captive screw that holds the PCI riser card assembly to the rear of the platform. For more details, see A in Figure 24 "Removing riser from chassis" (page 89).
5	Pull up on the riser to remove the riser card assembly from the chassis. For more details, see B in Figure 24 "Removing riser from chassis" (page 89).

Copyright © 2007-2009, Nortel Networks

Figure 24
Removing riser from chassis

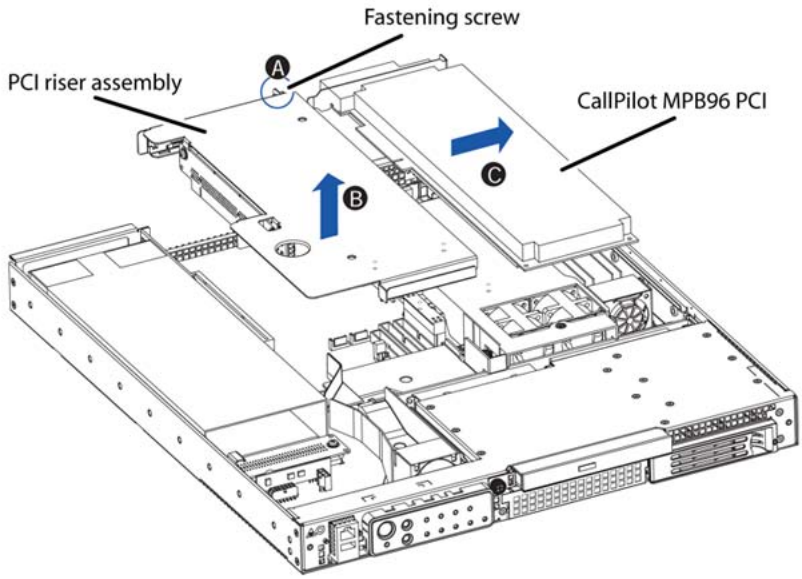

6 Insert the MPB96 card into the slot on the riser card.

7 Firmly press the riser card straight down over the MPB96 slot until the card is seated in the server board slot. For details, see B, Figure 24 "Removing riser from chassis" (page 89).

> ***Note:*** Press the riser card straight down into the slot. Press down on the riser card, not on the MPB96 card. Tipping it in the slot while installing it or pressing on the MPB96 card can damage the riser card, board slot, or the MPB96 card.

8 Tighten the captive screw that holds the riser assembly to the chassis. For details, see A, Figure 24 "Removing riser from chassis" (page 89).

9 Replace the server cover.

10 Take off the ESD strap.

11 Plug in the peripheral devices and Ethernet cables, connect the AC power cords, and restart the server.

> ***Note:*** If you have replaced an NTRH40AA MPB96 board with an NTRH40AC, version, see *CS 1000 and CallPilot Server Configuration Guide* (NN44200-312) or *Meridian 1 and CallPilot Server Configuration Guide* (NN44200-302) for information about connecting your DS30 cables.

Copyright © 2007-2009, Nortel Networks

—End—

Replacing the DVD-ROM/CDRW drive

Your 600r server comes with a DVD-ROM/CDRW drive installed. The DVD drive is not hot-swappable. You must power down the system to replace the DVD drive.

You must also remove the server cover and the front bezel to replace the DVD drive.

Requirements

You need a Phillips (cross head) screwdriver, #1 and #2 bits.

To replace the DVD drive

Step	Action
1	Power down the server, unplug all peripheral devices and Ethernet cables, and disconnect the AC power.
2	Remove the server cover. For instructions, see "Removing and replacing the server cover" (page 77).
3	Remove the front bezel. For instructions, see "Removing and replacing the front bezel" (page 75).
4	Attach the ESD strap to your wrist and attach the other end to a known grounded connection.
5	At the rear of the DVD-ROM drive, push outward on the cable retention clips on each side of the DVD-ROM data cable. Releasing the retention clips pushes the connector from the drive.
6	At the rear of the DVD-ROM drive, press inward on the cable retention clip at the right side of the DVD-ROM power cable. While holding the retention clip in, pull the power cable from the drive.
7	Loosen the blue captive screw at the left side of the DVD-ROM drive assembly.
8	Slide the DVD-ROM drive assembly from the chassis. ***Note:*** There are no cables to disconnect.

Copyright © 2007-2009, Nortel Networks

Figure 25
Removing DVD-ROM drive assembly from chassis

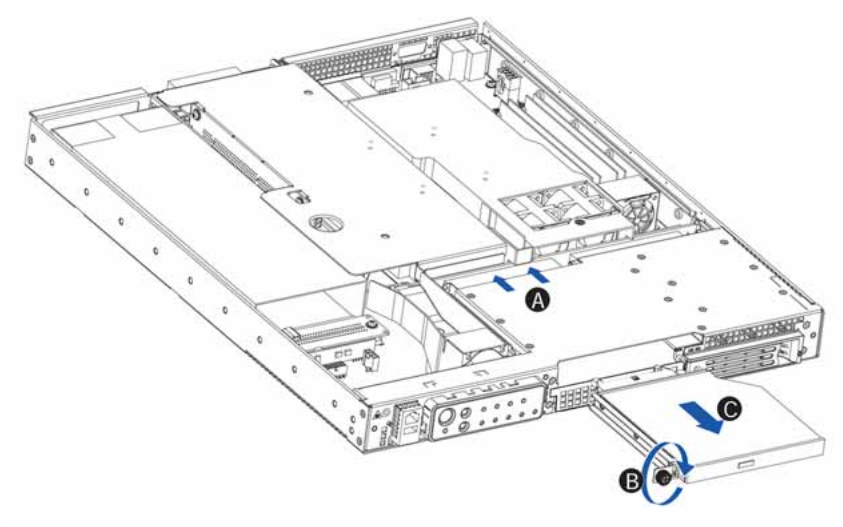

9 Press downward on the side of the bracket where the blue captive screw is attached to release the DVD-ROM drive from the drive bracket.

10 Remove the two small screws that attach the backplane to the drive and put them aside to install the new DVD-ROM.

11 Remove the DVD-ROM drive from the carrier.

12 Attach the backplane to the replacement drive, using the screws removed in step 9. For details, see A in Figure 25 "Removing DVD-ROM drive assembly from chassis" (page 91).

13 Install the new DVD-ROM drive in the carrier.

a. Line up the pins on each side of the bracket (two on each side) with the holes in the drive and set the replacement DVD drive into the drive bracket. Push gently on one side of the bracket to push the pins into place.

b. Screw the carrier shut with the three screws.

c. Reconnect the power and ribbon cables.

Copyright © 2007-2009, Nortel Networks

Figure 26
Attaching DVD drive to bracket

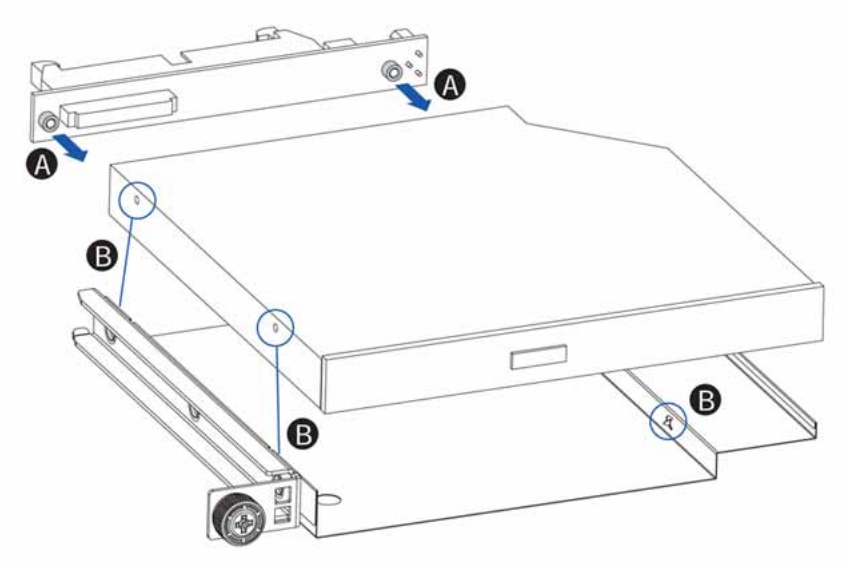

14 With the black drive carrier handle in the fully open position, slide the drive assembly back into the chassis.

15 Slide the DVD-ROM drive assembly into the chassis.

16 Tighten the blue captive screw at the left side of the drive assembly. For details, see A in Figure 26 "Attaching DVD drive to bracket" (page 92).

17 Attach the drive power and data cables at the rear of the drive. After the cables are firmly installed, the cable retention clips lock into place.

18 Replace the server cover. For instructions, see "Removing and replacing the server cover" (page 77).

19 Take off the ESD strap.

20 Replace the front bezel.

21 Plug in the peripheral devices and Ethernet cables, connect the AC power cords, and restart the server.

—End—

Copyright © 2007-2009, Nortel Networks

Replacing memory DIMMs

There are two Dual Inline Memory Modules (DIMMs) installed on your server. You must replace the memory DIMMs with those in the Nortel replacement pack. Nortel does not support more than two DIMM modules in the 600r server.

CAUTION
Risk of equipment damage
Take precautions to protect internal components. Electrostatic discharge (ESD) can damage cards and make them unusable.

To replace the DIMM cards

Step	Action
1	Power down the server, unplug all peripheral devices and Ethernet cables, and disconnect the AC power.
2	Attach the ESD strap to your wrist and attach the other end to a known grounded connection.
3	Remove the server cover. For instructions, see "Removing and replacing the server cover" (page 77).
4	Locate memory banks 1A AND 1B on the server board. For details, see Figure 27 "Memory DIMM locations" (page 93).

Figure 27
Memory DIMM locations

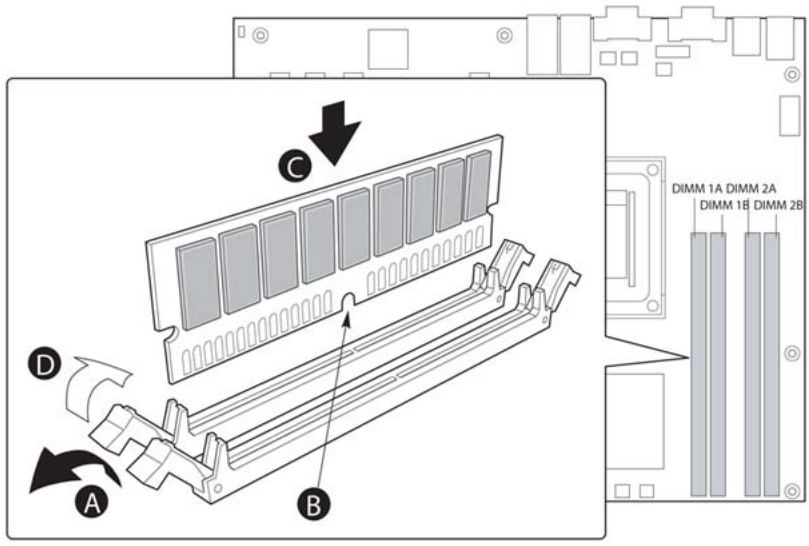

Copyright © 2007-2009, Nortel Networks

5 Push the clips at each end of the DIMM sockets outward to the open position.

6 Remove all the DIMMs.

7 Holding each DIMM by the edges, remove it from the anti-static envelope.

8 Position the DIMM above the socket and align the small notch in the bottom edge of the DIMM with the keys in the socket.

9 Insert the bottom edge of the DIMM into the socket.

10 Push down on the top edge of the DIMM until the retaining clips snap into place. Ensure the retaining clips are fully closed so that the DIMM can make proper contact with the server board.

11 Install the other DIMM.

12 Replace the server cover.

13 Plug in the peripheral devices and Ethernet cables, connect the AC power cords, and restart the server.

—End—

Replacing the software feature key

To replace the software feature key

Step	Action
1	Remove the dongle software feature key from the server.
2	To eject the software feature key you must open the access door. a. Insert a very small screwdriver into the side-access hole and gently pull back on the access door. b. Eject the old software feature key.
3	Insert the new software feature key into the software feature slot on the dongle with the data contact facing down and away from the embossed i.

Copyright © 2007-2009, Nortel Networks

Figure 28
Dongle with open slot

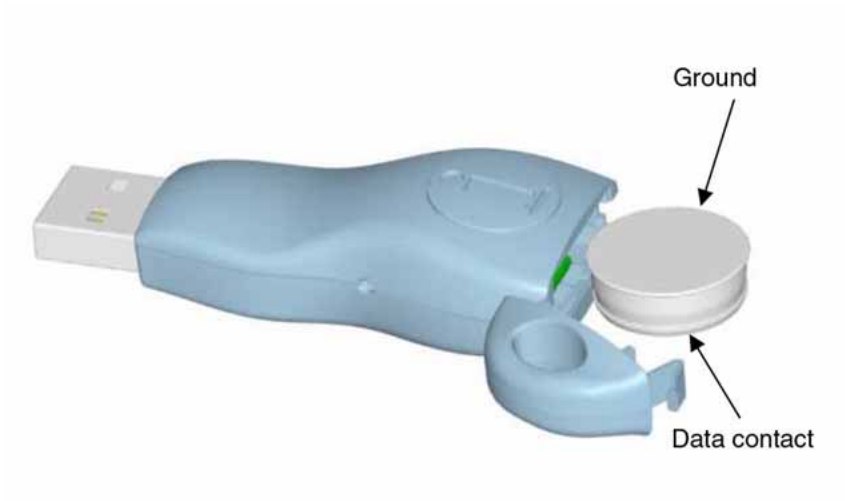

—End—

Copyright © 2007-2009, Nortel Networks

Copyright © 2007-2009, Nortel Networks

Chapter 8
M1/CS 1000 switch connectivity and the MPB96

In this chapter

"M1/CS 1000 switch connectivity" (page 97)

"DSP numbering and location" (page 98)

M1/CS 1000 switch connectivity

There is only one valid configuration for MPB96 card in the 600r server with M1/CS 1000 switch connectivity. The following table shows the configuration.

Table 18
MPB96 with M1/CS 1000 switch

MPB96 cards	Slot number	Max. Channels	MPU
1	1	96	96

There are two versions of MPB96 cards; the NTRH40AA and the NTRH40CA. The following table provides a comparison of the two cards.

MPB96 version	Description	Connected to the CS 1000 by
NTRH40AA	Has a single DB-44 connector on its faceplate	An NTRH2014 DS30X cable.
NTRH40CA	Has three RJ-45 connectors on its faceplate	Up to three standard CAT5e (or better) RJ-45 connectorized Ethernet-type DS30 cables. For more information see *CS 1000 and CallPilot Server Configuration* Guide (NN44200-312).

Copyright © 2007-2009, Nortel Networks

Taking safety precautions

Before you make any changes to the server hardware, follow these safety precautions:

- Respect appropriate electrostatic discharge (ESD) rules.
- Power down the system.
- Do not drop and leave screws inside the server.
- Do not drop hard objects (such as screwdrivers) inside the server, as this can damage the server.

DSP numbering and location

DSPs are the built-in voice processing components on MPB boards. DSPs are numbered to distinguish them in CallPilot maintenance programs, such as the Maintenance page in CallPilot Manager. Each DSP supports up to eight multimedia channels.

DSP numbering on MPB96 boards

The MPB96 board has 12 embedded DSPs. MPC-8 cards are not required. If an embedded DSP is faulty, you must replace the entire MPB96 board.

Figure 29
NTRH40AA MPB96 board

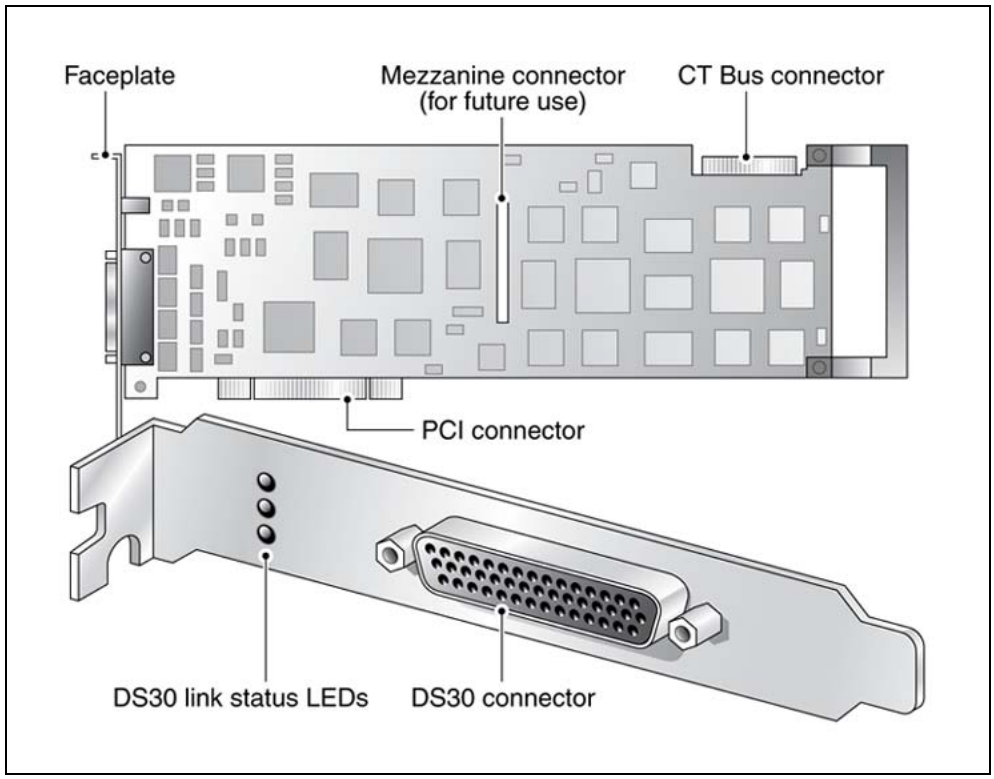

Copyright © 2007-2009, Nortel Networks

Figure 30
NTRH40CA MPB96 board

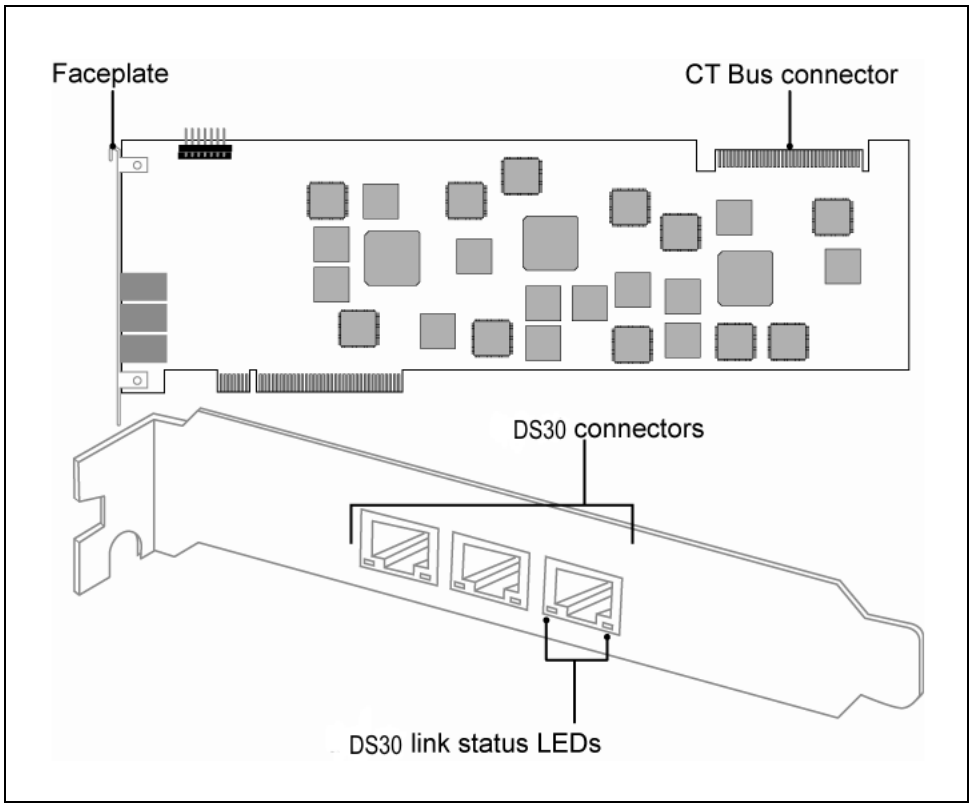

Copyright © 2007-2009, Nortel Networks

Copyright © 2007-2009, Nortel Networks

Chapter 9
Maintaining the BIOS and system board firmware

In this chapter

"Configuring the 600r BIOS and firmware" (page 101)

"600r server display non-default CMOS settings" (page 104)

"Using the System Setup Utility logs" (page 105)

"Maintaining the onboard video and network interface" (page 107)

Configuring the 600r BIOS and firmware

Overview

The Basic Input/Output System (BIOS) of your 600r server is Flash ROM-based code. Upgrade or reconfigure the BIOS using the utilities on the CallPilot Image DVD. The utility programs write updated code to the Flash ROM chips.

Upgrading or reconfiguring the BIOS is a three-step process:

1. Boot up from the Image DVD and display the Image Menu.
2. Update the BIOS firmware.
3. Update the FRU/SDR firmware.

ATTENTION

You must complete all the steps, in the correct order, for your system to function properly.

Copyright © 2007-2009, Nortel Networks

When to upgrade the BIOS

CAUTION
Risk ofdata loss
Perform this procedure only if specifically instructed to do so by your Nortel representative.

The CallPilot server is shipped with the required minimum BIOS version. Upgrade the BIOS only if your Nortel representative deems this necessary to solve a system problem.

When to reconfigure the BIOS

The initial BIOS configuration is performed at the factory before the CallPilot server is shipped to you. Reconfigure the BIOS only after you recover from a BIOS or CMOS failure.

Requirements for upgrading or reconfiguring the BIOS

You must have the CallPilot Image DVD to upgrade or reconfigure the BIOS.

ATTENTION
You must have all the hardware components of your system installed and connected before you upgrade the BIOS.

To display the Nortel CallPilot Image Menu

Step	Action
1	Insert the CallPilot Image DVD for the platform into the DVD drive.
2	Power down the CallPilot server.

3	Restart the CallPilot server.
	Result: The server boots from the DVD and the Startup Menu appears with the following options:
	`1.Install CallPilot 5.0 600r server image and exit to DOS (recommended).`
	`2. Install CallPilot 5.0 600r server image and exit to DOS (FACTORY ONLY).`
	`3.Utilities (BIOS, Firmware, etc...)`

4	Select **3**, Utilities (Bios, Firmware, etc...), and press **Enter**.
	Result: The Nortel CallPilot Image Menu appears.
	`1. 600r server BIOS update`
	`2. 600r FRU/SDR firmware update`
	`3. 600r server Display Non-Default CMOS Settings`

Copyright © 2007-2009, Nortel Networks

```
4.  600r server SSU
5.  Reboot
6.  Goto DOS
```

—End—

To upgrade or configure the BIOS

Step	Action
1	Enter 1 to run the 600r server BIOS update from the Nortel CallPilot Image Menu. **Result:** The following message appears: `Enter Y to update the BIOS [Y,N]`

2	Enter Y to confirm.
	Result: The system displays the BIOS update progress and the following message appears:
	`Update is now complete...`
	`PLEASE POWER DOWN physically in order for the settings to take effect!`

3	Power off your server by pressing the power button on the server faceplate, and then power on the server by pressing the power button again. **Result:** The system reboots and the Startup Menu appears.
4	Enter 3 to run Utilities (BIOS, Firmware, etc...) from the Startup Menu. If the Startup Menu is not displayed, see "To display the Nortel CallPilot Image Menu" (page 102).
5	Enter 2 to run the 600r server FRU/SDR firmware update from the Nortel CallPilot Image Menu. **Result:** The following prompt appears: Enter Y to update the FRU,SDR [Y,N]

6	Enter Y to confirm.
	Result: The system displays the FRU/SDR update progress and the following message appears.
	`Update is now complete...`
	`PLEASE POWER DOWN physically in order for the settings to take effect!`

Copyright © 2007-2009, Nortel Networks

7	Power off your server by pressing the power button on the server faceplate, then power on the server by pressing the power button again. **Result:** The system reboots and the Startup Menu appears.
8	Remove the Image DVD from the DVD drive and enter any key. **Result:** The system reboots.
9	The BIOS upgrade is complete.

—End—

600r server display non-default CMOS settings

This section describes the changes you must make to your non-default CMOS settings after a successful BIOS upgrade. These changes are important to the operation of your server.

> ***Note:*** These settings are already enabled from the factory. You only need to change your non-default CMOS settings if you upgrade your BIOS.

To view your non-default CMOS settings, perform the following steps:

Step	Action
1	Insert the CallPilot 600r DVD and select 3 from the Startup menu: **Utilities (BIOS, Firmware, etc...)** **Result:** The Nortel CallPilot Image Menu appears.
2	Select **3. 600r server Display Non-Default CMOS Settings**. **Result:** The following message appears: Enter Y to display a text file of the CMOS settings. [Y,N]
3	Enter Y to display the text file. **Result:** The following text file appears: ***Note:*** The text file that appears includes instructions to view and make changes to your non-default CMOS settings. ******* BEGINNING OF TEXT DISPLAY******* ********** *** Intel Chessne 1U BIOS Settings *** *** Release 1 (January 26, 2006) ***

Copyright © 2007-2009, Nortel Networks

****

1. During bootup press "F2" to edit the BIOS settings.
2. Under "Exit" load "Load Optimal Defaults."
3. Thereafter make the following changes:

   a) BOOT->BOOT SETTINGS CONFIGURATION

   QUIET BOOT [DISABLED]

   b) BOOT->BOOT DEVICE PRIORITY

   1ST BOOT DEVICE [PS-DW-224E-C]

   2ND BOOT DEVICE [00, AIC-7901A: 0 FU]

   c) SERVER

   ASSERT NMI ON PERR [DISABLED]

   ASSERT NMI ON SERR [DISABLED]

   POWER LINK [POWER ON]

   FRB-4 POLICY [RESET]

4. Proceed to "Exit" and save these newly configured settings as "SAVE CUSTOM DEFAULTS".
5. Then within "Exit" proceed to "Save Changes and Exit".
6. Reboot server and verify settings.

******* END OF TEXT DISPLAY*******

4 During the boot up sequence, press F2 to change your CMOS settings. Make your changes according to the text that appears in the previous step.

—End—

Using the System Setup Utility logs

The System Setup Utility (SSU) hardware event logs record all the hardware events that take place while the system boots up and functions. SSU event logs are hardware logs, while the system event logs described in "Viewing event logs" (page 29) apply to the software application. You can view SSU logs even when the system is not operational through the utilities on the CallPilot Image DVD.

Copyright © 2007-2009, Nortel Networks

ATTENTION
This tool is only intended for use by authorized Nortel support personnel.

The SSU logs can only hold 2000 events and display a warning message when full. You must clear the logs to turn off the warning message. For more details, see "To clear SSU logs" (page 107).

Even if your system is not operational, you can save the SSU logs to an optional USB media drive. Your support representative can use the logs to diagnose hardware faults. For more details, see "To save SSU logs to a USB media drive" (page 107).

To view SSU logs

Step	Action
1	Boot from the CallPilot Image DVD and display the Nortel CallPilot Image Menu that lists the utilities. For more details, see "To display the Nortel CallPilot Image Menu" (page 102).
2	Enter 4 to run the 600r system utility and SEL viewer from the Nortel CallPilot Image Menu.
3	Confirm that you want to run the utility by entering Y. **Result:** The Intel GUI screen appears. ***Note:*** The Intel GUI is not a Windows-based screen.
4	To view the hardware SSU logs, select **System Event Log (SEL)** from the Available Tasks menu. **Result:** The SEL Viewer screen displays all the SSU logs.
5	Use the arrow keys to scroll through the logs. The details of the currently highlighted event display on the bottom of the screen.
6	After you are finished viewing events, select File → Exit from the menu bar. **Result:** The Intel GUI appears.
7	Click Exit to close the GUI.

—End—

Copyright © 2007-2009, Nortel Networks

To clear SSU logs

Step	Action
1	Display the SEL Viewer. For details, see "To view SSU logs" (page 106).
2	Select SEL → Clear SEL from the menu bar. **Result:** The list of events is now empty.
3	Select File → Exit from the menu bar. **Result:** The Intel GUI appears.
4	Click Exit to close the GUI.

—End—

To save SSU logs to a USB media drive

Step	Action
1	Connect a USB drive media to the USB port on the front of the server.
2	Display the SEL Viewer. For details, see "To view SSU logs" (page 106).
3	Select File → Save as.
4	Enter the file name and destination (usually a: or c: drive) to save the SSU logs to the USB media drive.

—End—

Maintaining the onboard video and network interface

Network card failure

The network cards are integrated into the server board. If the network interface fails, the server must be replaced.

Video card failure

The video card is integrated into the server board. If the video card fails, you must replace the server.

Copyright © 2007-2009, Nortel Networks

Indicators for video card failure

If the monitor appears to function but no display is visible, look for the following indicators of a video card malfunction:

- Brightness and contrast are set at normal level.
- The server is powered on, and one long beep is followed by two short beeps.
- The DVD combo drive light goes on when the server is powered up, but no display is visible on the monitor.
- The DVD combo drive light comes on when you type **`dir D:`** and press Enter, but no display is visible on the monitor.

Copyright © 2007-2009, Nortel Networks

Index

A

alarm board
  replacement of 93
Alarm Monitor 45
alarms
  about 44, 45
  investigating 45
alert icons, component states 52
application event log
  definition 30
arp command 37
  parameters and descriptions 37
  running from Windows 38
  syntax 37

B

Backup Restore Tool 64
bezel, front 77
  removal of 76
  replacement of 76
BIOS
  configuring 101
boot failure
  CallPilot
    what to do 28
  Windows
    what to do 27

C

call channels
  disabling 48
  working with 60, 62
CallPilot
  utilities
    Backup Restore Tool 64
    CPTrace Tool 64, 72
    Diagnostics Tool 63
    PEP Maintenance 63, 65
    Session Trace 66, 72
    System Monitor 64
CallPilot Manager
  alarms
    about 44, 45
    investigating 45
  alert icons, component states 52
  Channel Monitor, using 48, 60, 62
  Event Browser, using 46, 48
  events
    about 43, 47
    investigating 47
  fault management
    alarm notification 44
    event processing 43
  Maintenance screen
    Diagnostics section 50
    General section 50
    Maintenance section 50
    purpose 48
  Multimedia Monitor, using 48, 59, 60
CallPilot services
  Channel Monitor tab 70
Channel Monitor tab 69
  CallPilot services 70
    critical 70
  DS30X links pane in 71
  DSP pane in 70
Channel Monitor, using 48, 60, 62

Copyright © 2007-2009, Nortel Networks

channels
call, working with 60, 62
disabling 48
multimedia, working with 59, 60
chkdsk utility 40
parameters and descriptions 41
running from Windows 41
syntax 41
CMOS settings
changing 104
commands, TCP/IP
arp 37
ipconfig 33
nbtstat 38
netstat 39
ping 34
tracert 35
components
CallPilot Manager maintenance activities 50
dependencies 44
diagnostics that can be run 56
list 49
replacing 27
states
Alert icons 52
description 51, 52
viewing 52
Courtesy stop, description 54
critical services, CallPilot 70

D

diagnostics
integrated
running 56, 57, 58
troubleshooting failures 56
when to run 56
last results
viewing 58, 58
TCP/IP 33
arp 37
ipconfig 33
nbtstat 38
netstat 39
ping 34
tracert 35
Diagnostics section, Maintenance screen 50
diagnostics tool
TCP/IP 33
Diagnostics Tool 63
diagram
rear panel
slot locations 14
dongle 94

E

Event Browser, using 46, 48
event log
application 30
security 30
system 30
event logs
types, description 30
viewing 30
events
about 43, 47
investigating 47

F

fan, hot-swap 85
fault management
alarm notification 44
event processing 43

G

General section, Maintenance screen 50

H

hardware problems, detecting 44

I

integrated diagnostics
running 57, 58
troubleshooting failures 56
when to run 56
ipconfig command 33
flags and descriptions 33
running from Windows 34
syntax 33
ipconfig default 33

Copyright © 2007-2009, Nortel Networks

L

Legend/Help tab 72
location
  MPB96 DSP 98
logs
  event types
    viewing 30
  event, viewing 30

M

maintenance
  activities by component 50
  preparing for 16
Maintenance screen, CallPilot Manager
  Diagnostics section 50
  General section 50
  Maintenance section 50
  purpose 48
MPB96 card 98
multimedia channels, working with 59, 60
Multimedia Monitor, using 48, 59, 60

N

nbtstat command 38
  parameters and descriptions 38
  running from Windows 39
  syntax 38
netstat command 39
  parameters and descriptions 40
  running from Windows 40
  syntax 39

P

parts, obtaining replacement 27
PEP Maintenance utility 63, 65
ping command 34
  parameters and descriptions 34
  running from Windows 35
  syntax 34
POST error codes and messages 24
POST message formats 23
power supply, hot-swap 80
Power-On Self-Test
  See POST 23

R

replacement parts, obtaining 27

S

SCSI controller
  error messages 24
security event log
  definition 30
server cover 77
  removal of 77
  replacing 78
Session Trace utility 66, 72
software feature key
  dongle 94
  replacing 94
SSU logs 105
startup problems
  what to do 27
Stop, description 54
system event log
  definition 30
System Info tab 71
System Monitor 64
  Channel Monitor tab 69
  Legend/Help tab 72
  System Info tab 71
System Monitor utility 69
system utilities
  System Monitor 69

T

TCP/IP diagnostics 33
  arp 37
  ipconfig 33
  nbtstat 38
  netstat 39
  ping 34
  tracert 35
tracert command 35
  parameters and descriptions 36
  running from Windows 36
  syntax 36

U

utilities

Copyright © 2007-2009, Nortel Networks

Backup Restore Tool 64
chkdsk 40
Diagnostics Tool 63
PEP Maintenance 63, 65
Session Trace 66, 72
System Monitor 64, 69

V

viewing 30

W

Windows
viewing 30

Copyright © 2007-2009, Nortel Networks

Nortel CallPilot

600r Server Maintenance and Diagnostics

Copyright © 2007-2009, Nortel Networks
All Rights Reserved.

Publication: NN44200-703
Document status: Standard
Document version: 01.06
Document date: 11 August 2009

To provide feedback or report a problem in this document, go to www.nortel.com/documentfeedback.

While the information in this document is believed to be accurate and reliable, except as otherwise expressly agreed to in writing NORTEL PROVIDES THIS DOCUMENT "AS IS" WITHOUT WARRANTY OR CONDITION OF ANY KIND, EITHER EXPRESS OR IMPLIED. The information and/or products described in this document are subject to change without notice.

Nortel, Nortel Networks, the Nortel logo, and the Globemark are trademarks of Nortel Networks.

All other trademarks are the property of their respective owners.