Nortel Ethernet Routing Switch 4500 Series

Installation Guide

ATTENTION
Clicking on a PDF hyperlink takes you to the appropriate page. If necessary, scroll up or down the page to see the beginning of the referenced section.

NN47205-300 (322811-A)

Document status: Standard
Document version: 02.01
Document date: 23 February 2007

Copyright © 2007, Nortel Networks
All Rights Reserved.

The information in this document is subject to change without notice. The statements, configurations, technical data, and recommendations in this document are believed to be accurate and reliable, but are presented without express or implied warranty. Users must take full responsibility for their applications of any products specified in this document. The information in this document is proprietary to Nortel Networks

The software described in this document is furnished under a license agreement and may be used only in accordance with the terms of that license. The software license agreement is included in this document.

Restricted rights legend

Use, duplication, or disclosure by the United States Government is subject to restrictions as set forth in subparagraph (c)(1)(ii) of the Rights in Technical Data and Computer Software clause at DFARS 252.227-7013.

Notwithstanding any other license agreement that may pertain to, or accompany the delivery of, this computer software, the rights of the United States Government regarding its use, reproduction, and disclosure are as set forth in the Commercial Computer Software-Restricted Rights clause at FAR 52.227-19.

Statement of conditions

In the interest of improving internal design, operational function, and/or reliability, Nortel Networks reserves the right to make changes to the products described in this document without notice.

Nortel Networks does not assume any liability that may occur due to the use or application of the product(s) or circuit layout(s) described herein.

International regulatory statements of conformity

This is to certify that the Nortel Networks Ethernet Routing Switch 4500 Series was evaluated to the international regulatory standards for electromagnetic compliance (EMC) and safety and were found to have met the requirements for the following international standards:

- EMC - Electromagnetic Emissions - CISPR 22, Class A
- EMC - Electromagnetic Immunity - CISPR 24
- Electrical Safety - IEC 60950, with CB member national deviations

Further, the equipment has been certified as compliant with the national standards as detailed below.

National electromagnetic compliance (EMC) statements of compliance

FCC statement (USA Only)

This equipment has been tested and found to comply with the limits for a Class A digital device, pursuant to Part 15 of the Federal Communications Commission (FCC) rules. These limits are designed to provide reasonable protection against harmful interference when the equipment is operated in a commercial environment. This equipment generates, uses, and can radiate radio frequency energy. If it is not installed and used in accordance with the instruction manual, it may cause harmful interference to radio communications. Operation of this equipment in a residential area is likely to cause harmful interference, in which case users will be required to take whatever measures may be necessary to correct the interference at their own expense.

ICES statement (Canada only)

Canadian Department of Communications Radio Interference Regulations

This digital apparatus (Nortel Ethernet Routing Switch 4500 Series) does not exceed the Class A limits for radio-noise emissions from digital apparatus as set out in the Radio Interference Regulations of the Canadian Department of Communications.

Règlement sur le brouillage radioélectrique du ministère des Communications

Cet appareil numérique (Nortel Ethernet Routing Switch 4500 Series) respecte les limites de bruits radioélectriques visant les appareils numériques de classe A prescrites dans le Règlement sur le brouillage radioélectrique du ministère des Communications du Canada.

CE marking statement (Europe only)

EN 55022 statement

This is to certify that the Ethernet Routing Switch 4500 Series equipment is shielded against the generation of radio interference in accordance with the application of Council Directive 89/336/EEC. Conformity is declared by the application of EN 55022 Class A (CISPR 22).

CAUTION
This device is a Class A product. In a domestic environment, this device can cause radio interference, in which case the user may be required to take appropriate measures.

EN 55024 statement

This is to certify that the Ethernet Routing Switch 4500 Series are shielded against the susceptibility to radio interference in accordance with the application of Council Directive 89/336/EEC. Conformity is declared by the application of EN 55024 (CISPR 24).

EN 300386 statement

The Ethernet Routing Switch 4500 Series complies with the requirements of EN 300386 V1.3.1 for emissions and for immunity for a Class A device intended for use in either Telecommunications centre or locations other than telecommunications centres given the performance criteria as specified by the manufacturer.

European Union and European Free Trade Association (EFTA) notice

All products labeled with the CE marking comply with R&TTE Directive (1995/5/EEC) which includes the Electromagnetic Compliance (EMC) Directive (89/336/EEC) and the Low Voltage Directive (73/336/EEC) issued by the Commission of the European Community.

Compliance with these directives implies conformity to the following European Norms (ENs). The equivalent international standards are listed in parenthesis.

- EN 55022 (CISPR 22)–Electromagnetic Interference
- EN 55024 (IEC 61000-4-2, -3, -4, -5, -6, -8, -11)–Electromagnetic Immunity
- EN 61000-3-2 (IEC 610000-3-2)–Power Line Harmonics
- EN 61000-3-3 (IEC 610000-3-3)–Power Line Flicker

VCCI statement (Japan/Nippon only)

This is a Class A product based on the standard of the Voluntary Control Council for Interference (VCCI) for information technology equipment. If this equipment is used in a domestic environment, radio disturbance may arise. When such trouble occurs, the user may be required to take corrective actions.

この装置は、情報処理装置等電波障害自主規制協議会（ＶＣＣＩ）の基準に基づくクラスＡ情報技術装置です。この装置を家庭環境で使用すると電波妨害を引き起こすことがあります。この場合には使用者が適切な対策を講ずるよう要求されることがあります。

BSMI statement (Taiwan only)

This is a Class A product based on the standard of the Bureau of Standards, Metrology and Inspection (BSMI) CNS 13438 and CNS14336 , Class A.

警告使用者：
這是甲類的資訊產品，在居住的環境中使用時，可能會造成射頻干擾，在這種情況下，使用者會被要求採取某些適當的對策。

MIC notice (Republic of Korea only)

This device has been approved for use in Business applications only per the Class A requirements of the Republic of Korea Ministry of Information and Communications (MIC). This device may not be sold for use in a non-business application.

Observe the Regulatory Marking label on the back or bottom of each switch for specific certification information pertaining to this model. Each Ethernet Routing Switch 4500 Series model is approved for shipment to/usage in Korea and is labeled as such, with all appropriate text and the appropriate MIC reference number.

National Safety Statements of Compliance

EN 60950 statement

This is to certify that the Ethernet Routing Switch 4500 Series equipment is in compliance with the requirements of EN 60950 in accordance with the Low Voltage Directive. Additional national differences for all European Union countries have been evaluated for compliance.

NOM statement (Mexico only)

The following information is provided on the devices described in this document in compliance with the safety requirements of the Norma Oficial Méxicana (NOM):

Exporter:	Nortel Networks, Inc. 4655 Great America Parkway Santa Clara CA 95054 USA
Importer:	Nortel Networks de México, S.A. de C.V. Avenida Insurgentes Sur #1605 Piso 30, Oficina Col. San Jose Insurgentes Deleg-Benito Juarez México D.F. 03900
Tel:	52 5 480 2100
Fax:	52 5 480 2199
Input:	Ethernet Routing Switch 4500 Series: • 4548GT-PWR 100-240 VAC 6.5 A 50-60 Hz • 4550T-PWR 100-240 VAC 6.5 A 50-60 Hz • 4548GT 100-240 VAC 3 A 50-60 Hz • 4550T 100-240 VAC 3 A 50-60 Hz • 4526FX 100-240 VAC 3 A 50-60 Hz

Información NOM (unicamente para México)

La información siguiente se proporciona en el dispositivo o en los dispositivos descritos en este documento, en cumplimiento con los requisitos de la Norma Oficial Méxicana (NOM):

Exportador:	Nortel Networks, Inc. 4655 Great America Parkway Santa Clara, CA 95054 USA
Importador:	Nortel Networks de México, S.A. de C.V. Avenida Insurgentes Sur #1605 Piso 30, Oficina Col. San Jose Insurgentes Deleg-Benito Juarez México D.F. 03900
Tel:	52 5 480 2100
Fax:	52 5 480 2199
Embarcar a:	Ethernet Routing Switch 4500 Series • 4548GT-PWR 100-240 VAC 6,5 A 50-60 Hz • 4550T-PWR 100-240 VAC 6,5 A 50-60 Hz • 4548GT 100-240 VAC 3 A 50-60 Hz • 4550T 100-240 VAC 3 A 50-60 Hz • 4526FX 100-240 VAC 3 A 50-60 Hz

Denan statement (Japan/Nippon only)

本製品を安全にご使用頂くため、以下のことにご注意ください。

- 接続ケーブル、電源コード、ACアダプタなどの部品は、必ず製品に同梱されております添付品または指定品をご使用ください。添付品・指定品以外の部品をご使用になると故障や動作不良、火災の原因となることがあります。
- 同梱されております付属の電源コードを他の機器には使用しないでください。上記注意事項を守らないと、死亡や大怪我など人身事故の原因となることがあります。

National Environmental Statements of Compliance

The WEEE Directive 2002/96/EC and RoHS (Restriction of Hazardous Substances) Directive 2002/95/EC sets collection, recycling and recovery targets for various categories of electrical products and their waste.

Restriction on Hazardous Substances Directive Compliance Statement

The Restriction on Hazardous Substances Directive (RoHS) (2002/95/EC), which accompanies the WEEE Directive, bans the use of heavy metals and brominated flame-retardants in the manufacture of electrical and electronic equipment. Specifically, restricted materials under the RoHS Directive are Lead (including solder used in PCB's), Cadmium, Mercury, Hexavalent Chromium, and Bromine.

Nortel declares compliance with the European Union (EU) RoHS Directive (2002/95/EC).

WEEE Directive Compliance Statement

This product at end of life is subject to separate collection and treatment in the EU Member States, Norway, and Switzerland and therefore is marked with the symbol shown at the left. Treatment applied at end of life of these products in these countries shall comply with the applicable national laws implementing Directive 2002/96/EC on Waste of Electrical and Electronic Equipment (WEEE).

Nortel declares compliance with the European Union (EU) WEEE Directive (2002/96/EC).

Revision History

Date Revised	Version	Reason for revision
October 2006	1.01	First Draft
December 2006	1.02	Second Draft: includes amendments resulting from Alpha phase reviewers' comments.
January 2007	1.03	Third Draft includes amendments resulting from TA phase reviewers' comments.
January 2007	2.01	Standard

Copyright © 2007, Nortel Networks
Nortel Networks Confidential

Copyright © 2007, Nortel Networks
Nortel Networks Confidential

Contents

Preface **11**
Nortel Ethernet Routing Switch 4500 Series 11
Related publications 12
Finding the latest updates on the Nortel Web site 13
How to get help 13
Getting help from the Nortel Web site 13
Getting help over the phone from a Nortel Solutions Center 14
Getting help from a specialist by using an Express Routing Code 14
Getting help through a Nortel distributor or reseller 14

Installing the Nortel Ethernet Routing Switch **15**
Electrostatic discharge 16
Preventing electrostatic discharge damage 16
Preventing electrostatic damage in new cable installations 16
Environmental requirements 17
Package contents 18
Installing the Nortel Ethernet Routing Switch 4500 Series on a table or shelf 19
Installing the Nortel Ethernet Routing Switch 4500 Series in an equipment rack 21
Cabling requirements for the Nortel Ethernet Routing Switch 4500 Series 23
Installation and removal of SFP transceivers 23
Installation of SFP transceivers 23
Removal of SFP transceivers 24
RJ-45 connector pin assignments 25
Nortel Ethernet Routing Switch 4548GT 26
Nortel Ethernet Routing Switch 4548GT-PWR 27
Nortel Ethernet Routing Switch 4550-T 27
Nortel Ethernet Routing Switch 4550T-PWR 28
Console port pin assignments 28
Universal Serial Bus (USB) ports 29
Power specifications for the Nortel Ethernet Routing Switch 4500 Series 29
Nortel Ethernet Routing Switch 4548GT, 4550T, and 4526FX 30
Nortel Ethernet Routing Switch 4548GT-PWR and 4550T-PWR 30
Nortel Ethernet Routing Switch Redundant Power Supply 15 power specification 31

Copyright © 2007, Nortel Networks
Nortel Networks Confidential

Nortel DC to DC converter module 31
Connecting AC power 31
Power cord specifications 31
Connecting power to the back panel 32
Checking LEDs on the Nortel Ethernet Routing Switch 4500 Series 33
Front panel LEDs 33
Switch LED state indicators 36
Port LED state indicators 37
Setting IP parameters for the Nortel Ethernet Routing Switch 4500 Series 38
Setting IP parameters using the console port and CLI Quickstart 38
Setting IP parameters using the console port and CLI 40
Setting IP parameters using IP.CFG file on a USB memory device 42
Setting IP parameters using bootp 42
Setting IP parameters using the Web-based Management Interface 42
Nortel Ethernet Routing Switch 4500 series stacking 44
Stack connector 44
Initial installation unit number assignment 46
Stack MAC address 46
Temporary base unit 47
Redundant cascade stacking 47
Replacing or adding a stack unit 48
Removing a stack unit 49
Stacking configurations 49
Cascade down 50
Cascade up 51

Translations of safety messages 53

Copyright © 2007, Nortel Networks
Nortel Networks Confidential

Preface

This guide provides information and instructions to install a 4500 Series Nortel Ethernet Routing Switch. For information about configuration and management of the switch, consult the documentation included with the switch and the product release notes. In addition, before you start the installation process, consult the documentation included with the switch and the product release notes (see "Related publications" (page 12)) for errata.

You need the following tools or equipment to successfully accomplish the installation procedures in this document:

- #2 Phillips screwdriver
- AC power cord that meets the requirements of the appropriate, local electrical codes. See "Connecting AC power" (page 31) for more information about this topic.
- Console cable and connector to match the male DTE connector (DB-9) on the switch.

Nortel Ethernet Routing Switch 4500 Series

"4500 Series Switch Platforms" (page 11) describes the 4500 Series of Nortel Ethernet Routing Switches.

4500 Series Switch Platforms

4500 Series Switch Model	Key Features
Nortel Ethernet Routing Switch 4526FX	24 100BaseFX ports (MTRJ connector) plus 2 10/100/1000 SFP combo ports Redundant power slot for DC/DC converter installation
Nortel Ethernet Routing Switch 4550T	48 10/100BaseTX RJ-45 ports plus 2 10/100/1000 SFP combo ports Redundant power slot for DC/DC converter installation
Nortel Ethernet Routing Switch 4550T–PWR	48 10/100BaseTX RJ-45 ports with PoE plus 2 10/100/1000 SFP combo ports. Integrated redundant power connector for RPS15 cable connection

Copyright © 2007, Nortel Networks
Nortel Networks Confidential

4500 Series Switch Model	Key Features
Nortel Ethernet Routing Switch 4548GT	48 10/100/1000BaseTX RJ-45 ports and 4 shared SFP ports Redundant power slot for DC/DC converter installation
Nortel Ethernet Routing Switch 4548GT–PWR	48 10/100/1000BaseTX RJ-45 with PoE and 4 shared SFP ports Integrated redundant power connector for RPS15 cable connection

Related publications

For more information about managing, configuring, and using the Nortel Ethernet Routing Switch 4500 Series switches, see the publications listed in " Nortel Ethernet Routing Switch 4500 Series Documentation and related information" (page 12).

Nortel Ethernet Routing Switch 4500 Series Documentation and related information

Title	Description	Part Number
Nortel Ethernet Routing Switch 4500 Series Regulatory Information	Regulatory and safety information for the Nortel Ethernet Routing Switch 4500 Series.	NN47205-100
Nortel Ethernet Routing Switch 4500 Series Installation	Instructions for to install a switch in the Nortel Ethernet Routing Switch 4500 Series. An overview of hardware important to the installation, configuration, and maintenance of the switch.	NN47205-300
Nortel Ethernet Routing Switch 4500 Series Release Notes - Software Release 5.0	An overview of new features, fixes, and limitations of the 4500 Series switches. Also included is supplementary documentation and document errata.	NN47205-400
Nortel Ethernet Routing Switch 4500 Series Overview - System Configuration	General instructions to configure switches in the 4500 Series that are not covered by the other documentation.	NN47205-500
Nortel Ethernet Routing Switch 4500 Series Configuration - VLANs, Spanning Tree, and MultiLink Trunking	Instructions to configure spanning and trunking protocols on 4500 Series switches	NN47205-501

Copyright © 2007, Nortel Networks
Nortel Networks Confidential

Title	Description	Part Number
Nortel Ethernet Routing Switch 4500 Series Configuration - System Monitoriing	Instructions to configure, implement, and use system monitoring on 4500 Series switches.	NN47205-502
Nortel Ethernet Routing Switch 4500 Series Configuration - Quality of Service	Instructions to configure and implement QoS and filtering on 4500 Series switches.	NN47205-504
Nortel Ethernet Routing Switch 4500 Series Security - Configuration	Instructions to configure and manage of security for switches in the 4500 Series.	NN47205-505
Installing SFP and XFP Transceivers and GBICs	Instructions to install transceivers.	318034-D
DC-DC Converter Module for the Baystack 5000 Series Switch	Information about the DC–DC converter module.	215081-A

Finding the latest updates on the Nortel Web site

The content of this documentation was current at the time of release. Updates to the documentation and software for the Nortel Ethernet Routing Switch 4500 Series are posted on the Nortel Technical Support web site:

www.nortel.com/support

Use the Product Finder to select the Nortel Ethernet Routing Switch 4500 Series products. See "Getting help from the Nortel Web site" (page 13) for a list of what is available from the Nortel Technical Support web site.

How to get help

This section explains how to get help for Nortel products and services.

Getting help from the Nortel Web site

The best way to get technical support for Nortel products is from the Nortel Technical Support Web site:

www.nortel.com/support

This site provides quick access to software, documentation, bulletins, and tools to address issues with Nortel products. From this site, you can:

- download software, documentation, and product bulletins

Copyright © 2007, Nortel Networks
Nortel Networks Confidential

- search the Technical Support Web site and the Nortel Knowledge Base for answers to technical issues
- sign up for automatic notification of new software and documentation for Nortel equipment
- open and manage technical support cases

Getting help over the phone from a Nortel Solutions Center

If you do not find the information you require on the Nortel Technical Support web site, and have a Nortel support contract, you can also get help over the phone from a Nortel Solutions Center.

In North America, call 1-800-4NORTEL (1-800-466-7835).

Outside North America, go to the following web site to obtain the phone number for your region:

www.nortel.com/callus

Getting help from a specialist by using an Express Routing Code

An Express Routing Code (ERC) is available for many Nortel products and services. When you use an ERC, your call is routed to a technical support person who specializes in supporting that product or service. To locate the ERC for your product or service, go to:

www.nortel.com/erc

Getting help through a Nortel distributor or reseller

If you purchased a service contract for your Nortel product from a distributor or authorized reseller, contact the technical support staff for that distributor or reseller.

Copyright © 2007, Nortel Networks
Nortel Networks Confidential

Installing the Nortel Ethernet Routing Switch

This section provides the information and procedures to install the Nortel Ethernet Routing Switch 4500 Series. Unless otherwise noted, tasks in this section apply to all switches in this series.

This section contains the following topics:

- "Electrostatic discharge" (page 16)
- " Environmental requirements" (page 17)
- " Package contents" (page 18)
- " Installing the Nortel Ethernet Routing Switch 4500 Series on a table or shelf" (page 19)
- " Installing the Nortel Ethernet Routing Switch 4500 Series in an equipment rack" (page 21)
- " Cabling requirements for the Nortel Ethernet Routing Switch 4500 Series" (page 23)
- "Installation and removal of SFP transceivers" (page 23)
- "RJ45 connector pin assignments" (page 25)
- "Console port pin assignments" (page 28)
- " Universal Serial Bus (USB) ports" (page 29)
- "Power specifications for the Nortel Ethernet Routing Switch 4500 Series" (page 29)
- "Connecting AC power" (page 31)
- "Checking LEDs on the Nortel Ethernet Routing Switch 4500 Series" (page 33)
- "Setting IP parameters for the Nortel Ethernet Routing Switch 4500 Series" (page 38)
- "Nortel Ethernet Routing Switch 4500 series stacking" (page 44)
- "Stacking configurations" (page 49)

Copyright © 2007, Nortel Networks
Nortel Networks Confidential

Electrostatic discharge

This section provides information and procedures to prevent electrostatic discharge during installation.

Preventing electrostatic discharge damage

Electrostatic discharge (ESD) is a discharge of stored static electricity that can damage equipment and impair electrical circuitry. These electrostatic voltages can result from friction including, but not exclusive to, pulling cabling through conduits, walking across carpeted areas, and building static charge in clothing. ESD damage occurs when you improperly handle electronic components and can result in complete or intermittent failures. While networking equipment is commonly designed and tested to withstand common mode ESD events, voltage can sometimes discharge to some connector pins but not others, or to some pins before others, which can potentially damage the networking equipment.

To protect the Nortel Ethernet Routing Switch against ESD damage, take the following preventive measures before you connect any data cables to the device:

- Always use anti-static wrist straps. Make sure you adjust the strap to provide good skin contact.
- Ensure that you properly ground work surfaces and equipment racks for protection against electrostatic discharge. You must connect the common point to the building ground wire. In a properly wired building, the nearest reliable ground is typically at the electrical outlet.
- Avoid contact between equipment and clothing. The wrist or ankle strap protects only the equipment from ESD voltages on the body; ESD voltages on clothing can still cause damage.
- Avoid touching any connector pins.
- Do not remove the wrist or ankle strap until the installation is complete.

Preventing electrostatic damage in new cable installations

With new cable installations, Nortel recommends that you use an ESD discharge cable to reduce the potential for damage from static that can build up in cables. The following figure illustrates an ESD cable.

ESD cable example

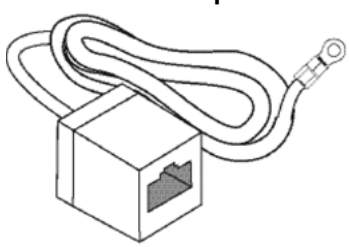

Copyright © 2007, Nortel Networks

To install the ESD discharge cable, perform the following procedure.

Step	Action
1	Connect the ground lug on the ESD discharge cable to a safe and suitable earth ground.
2	Briefly connect all RJ-45 cable connectors to the female RJ-45 connector of the ESD discharge cable, and then connect each RJ-45 cable connector to the switch.
3	Leave cables connected to the networking equipment. After you connect cables to networking equipment, the cables do not build up charge.

—End—

Environmental requirements

" Nortel Ethernet Routing Switch 4500 Series environmental requirements" (page 17) provides the environmental requirements for the individual switches in this series. Ensure that the area where you install the switch and where it will operate meets these requirements.

Nortel Ethernet Routing Switch 4500 Series environmental requirements

Environmental requirement	Nortel Ethernet Routing Switch 4500 Series All models
Ambient Temperature	0°C to 50°C, continuous operation
Operating Temperature	0°C to 50°C
Storage Temperature	-40°C to 85°C
Operating Humidity	0 to 95 percent non-condensing
Operating Relative Humidity	10 to 90 percent non-condensing
Storage Relative Humidity	10 to 90 percent non-condensing
Maximum Operating Altitude	10 000 feet above sea level
Altitude	0 to 10 000 feet above sea level
Storage Altitude	-1 000 to 40 000 feet above sea level

Copyright © 2007, Nortel Networks
Nortel Networks Confidential

Environmental requirement	Nortel Ethernet Routing Switch 4500 Series All models
Acoustic Noise	Less than or equal to 45 db typical (measurement methods based on ISO 7779)
Miscellaneous Operating Considerations	• No heat sources such as hot air vents or direct sunlight near the switch. • No sources of severe electromagnetic interference near the switch. • No excessive dust in the environment. • An adequate power source is within 6 feet (1.83 meters) of the switch. One 15-amp circuit is required for each power supply. • At least 2 inches (5.08 centimeters) of clearance on each side of the switch unit for ventilation. • Adequate clearance at the front and rear of the switch for access to cables.

WARNING
To avoid bodily injury from hazardous electrical shock and current, never remove the top of the device. No user-serviceable components are inside. For a translation of this statement, see "Translations of safety messages" (page 53).

Package contents

"Nortel Ethernet Routing Switch 4500 Series package contents" (page 19) illustrates the components that are provided with each switch in the 4500 Series. If any components are missing, contact the switch vendor.

Copyright © 2007, Nortel Networks
Nortel Networks Confidential

Nortel Ethernet Routing Switch 4500 Series package contents

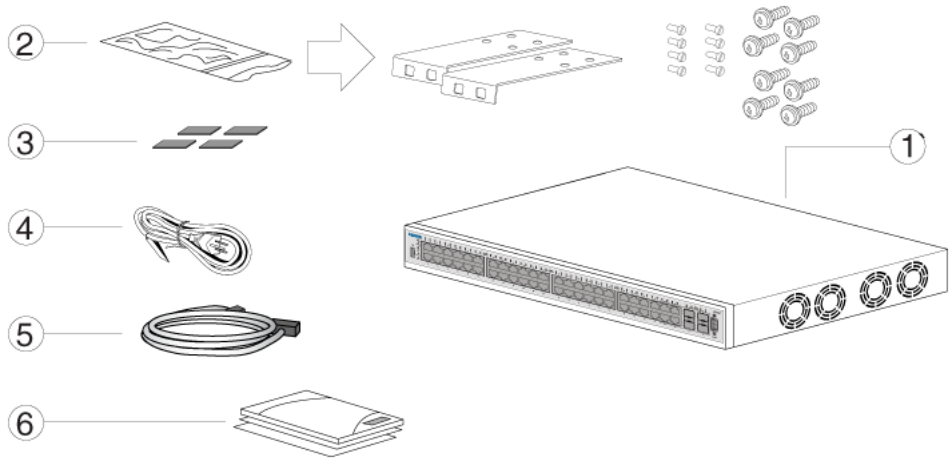

1. Nortel Ethernet Routing Switch 4500 Series
2. Rack-mounting hardware that includes
   - Rack-mount brackets
   - Screws to attach brackets to the switch
   - Screws to attach the switch to the equipment rack
3. Rubber footpads
4. AC power cord
5. Standard 1.5 foot (45 cm) stacking cable
6. Documentation

Installing the Nortel Ethernet Routing Switch 4500 Series on a table or shelf

You can install a single 4500 Series Nortel Ethernet Routing Switch on any flat surface. The surface must be able to support the combined weight of the switch and attached cables (from 15 and 20 pounds [7 to 9 kilograms]).

CAUTION
Do not place a Nortel Ethernet Power Supply Unit or Nortel Ethernet Redundant Power Supply on top of a Nortel Ethernet Routing Switch 4500 Series. The switch housing of a 4500 Series Nortel Ethernet Routing Switch cannot support the weight of these units. For a translation of this statement, see "Translations of safety messages" (page 53).

Copyright © 2007, Nortel Networks
Nortel Networks Confidential

To install a 4500 Series switch on a table or shelf, perform the following procedure.

Step	Action
1	Attach the included rubber footpads on the bottom of the switch at the locations indicated in "Attaching the rubber footpads" (page 20).

Attaching the rubber footpads

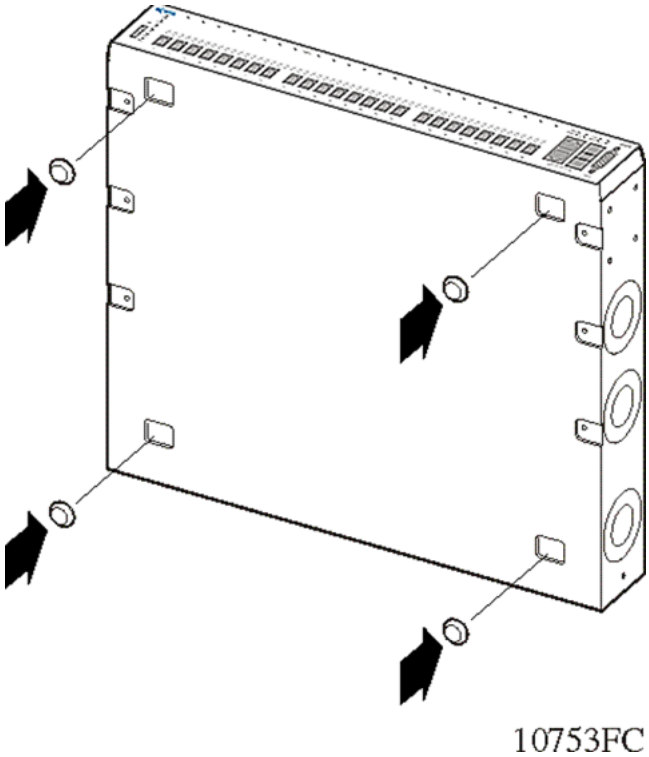

2	Set the switch on a table or shelf as illustrated in "Nortel Ethernet Routing Switch on a desk or shelf" (page 21). Allow at least 2 inches (5.1 centimeters) on each side for proper ventilation and at least 5 inches (12.7 centimeters) at the back for power cord clearance.

Copyright © 2007, Nortel Networks
Nortel Networks Confidential

Nortel Ethernet Routing Switch on a desk or shelf

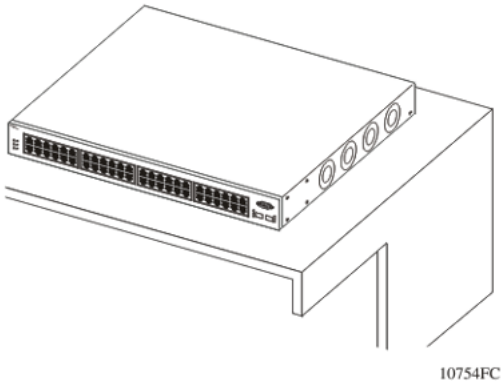

—End—

Installing the Nortel Ethernet Routing Switch 4500 Series in an equipment rack

Before you start this procedure, ensure that the equipment rack meets these requirements:

- A space of 1.75 inches (4.45 centimeters) in height is available for each switch in an EIA- or IEC-standard 19-inch (48.2-centimeter) equipment rack.
- The rack is bolted to the floor and braced if necessary.
- The rack is grounded to the same grounding electrode used by the power service in the area. The ground path must be permanent and must not exceed 1 Ohm of resistance from the rack to the grounding electrode.

CAUTION
When you mount the device in a rack, do not stack units directly on top of one another. You must secure each unit to the rack with the appropriate mounting brackets. Mounting brackets cannot support multiple units. For a translation of this statement, see "Translations of safety messages" (page 53).

To install a 4500 Series switch in an equipment rack, perform this procedure.

Step	Action
1	Attach a bracket to each side of the switch using a #2 Phillips screwdriver as illustrated in "Attaching switch brackets" (page 22).

Copyright © 2007, Nortel Networks
Nortel Networks Confidential

Place the bracket with the round holes on the right side of the switch, where the round fan vents are located.

Attaching switch brackets

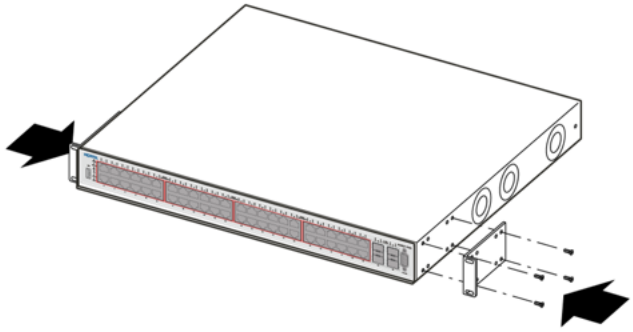

2 Slide the switch into the rack as illustrated in "Mounting the switch" (page 22).

Mounting the switch

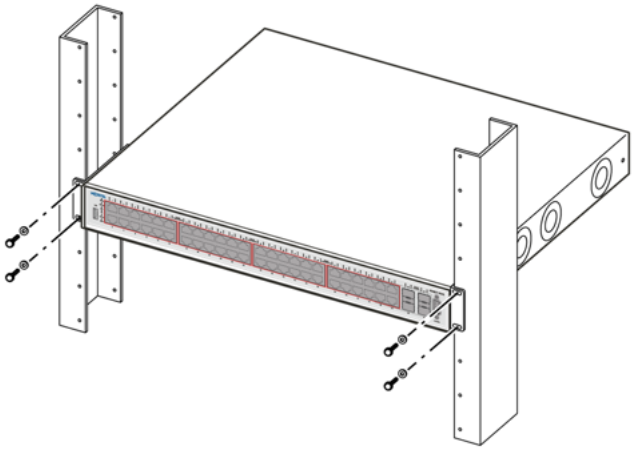

3 Insert and tighten the rack-mount screws using a #2 Phillips screwdriver.

—End—

Copyright © 2007, Nortel Networks
Nortel Networks Confidential

Cabling requirements for the Nortel Ethernet Routing Switch 4500 Series

"Switch cabling requirements" (page 23) describes the cables required for a Nortel Ethernet Routing Switch 4500 Series switch.

Switch cabling requirements

Required Cable	Description
10/100/1000Base TX Ports	The interconnect cabling must conform to the Cat5e, Cat6, or Cat6e specification of the Commercial Building Telecommunications Cabling Standard, ANSI/TIA/EIA 568-B fitted with an RJ-45 Module jack.
10/100Base TX Ports	The interconnect cabling for 10BaseT Ethernet must conform to Cat3, Cat4, Cat5 (or better) UTP cabling for distances up to 100 meters. The interconnect cabling for 100BaseTX Fast Ethernet must conform to Cat5 (or better) UTP cabling for distances up to 100 meters.
100BaseFX Ports	The interconnect cabling must conform to 50/125 or 62.5/125 micron multimode fiber-optic cabling for distances up to 3 kilometers.
Console Port	Serial cable with a DB-9 female connector on both ends. The maximum length for the console port cable is 25 feet (8.3 meters).
SFP Transceiver Ports	Varies with the installed SFP transceiver. See the documentation shipped with the SFP transceiver for specifications.
USB Port	USB 2.0 Type A-compliant cable.

Note: In **Autonegotiation** mode, the Nortel Ethernet Routing Switch 4500 Series automatically provides the proper MDI/MDI-X connection on the RJ-45 ports; to eliminate the need for crossover cables. When you disable **Autonegotiation** on 10/100 ports, MDI/MDI-x is also disabled.

Installation and removal of SFP transceivers

The following section describes how to install and remove SFP transceivers in the Nortel Ethernet Routing Switch 4500 Series. For complete information about SFP transceiver use and designation, see *Installing SFP and XFP Transceivers and GBICs* (318034-D)

Installation of SFP transceivers

This section describes how to install SFP transceivers.

To install SFP transceivers, perform the following procedure.

Copyright © 2007, Nortel Networks

Step	Action
1	Remove the transceiver from the protective packaging.
2	Verify that the transceiver is the correct model for the network configuration.
3	Grasp the transceiver between your thumb and forefinger.
4	Insert the transceiver into the proper module on the switch. Apply a light pressure to the transceiver until it clicks and locks into position in the module.

Transceiver insertion

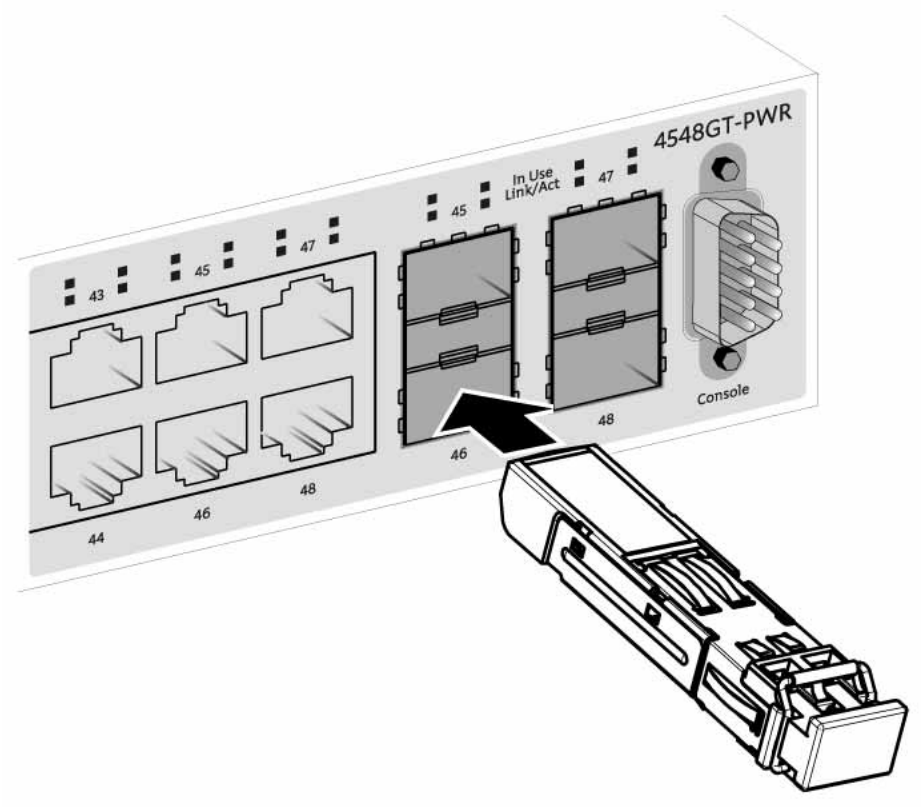

Step	Action
5	Remove the dust cover from the transceiver optical bores.

—End—

Removal of SFP transceivers

This section describes how to remove SFP transceivers.

To remove SFP transceivers, perform the following procedure.

Copyright © 2007, Nortel Networks
Nortel Networks Confidential

Step	Action
1	Disconnect the network fiber cable from the transceiver.
2	Use the locking/extractor mechanism on the transceiver to release it. The locking/extractor mechanism varies from model to model as illustrated in "Transceiver locking/extractor mechanism examples" (page 25).

Transceiver locking/extractor mechanism examples

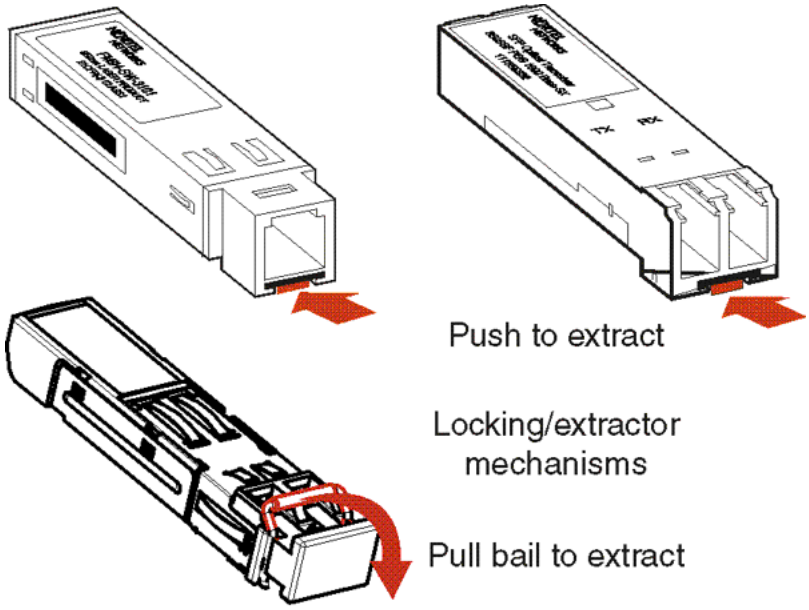

3	Slide the transceiver from the module slot.
4	If the transceiver does not slide easily from the module slot, use a gentle side-to-side rocking motion while firmly pulling the transceiver from the slot.
5	Attach a dust cover over the fiber optic bores and store the transceiver in a safe place until you need it. ***Note:*** Discard transceivers in accordance with the proper laws and regulations.

—End—

RJ-45 connector pin assignments

The following section describes the connector pin assignments for the RJ-45 connectors in the Nortel Ethernet Routing Switch 4500 Series switches.

Copyright © 2007, Nortel Networks
Nortel Networks Confidential

Consult the appropriate section for specific information on an individual switch:

"4548GT RJ45 connector pin assignments" (page 26)

"4548GT-PWR RJ45 connector pin assignments" (page 27)

"4550-T RJ45 connector pin assignments" (page 27)

"4550T-PWR RJ45 connector pin assignments" (page 28)

Nortel Ethernet Routing Switch 4548GT

The following table describes the RJ-45 connector pin assignments in the Nortel Ethernet Routing Switch 4548GT switch.

4548GT RJ-45 connector pin assignments

Connector	Pin Number	Signal for 10/100BaseT MDI configuration	Signal for 10/100BaseT MDI-X configuration
	1	Output transmit data + (TX+)	Input receive data + (RX+)
	2	Output transmit data - (TX–)	Input receive data - (RX–)
	3	Input receive data + (RX+)	Output transmit data + (TX+)
	6	Input receive data - (RX–)	Output transmit data - (TX–)
	4, 5, 7, 8	Not used	Not used
	Pin Number	**Signal for 1GBaseT MDI configuration**	**Signal for 1GBaseT MDI-X configuration**
	1	TP0+	TP1+
	2	TP0–	TP1–
	3	TP1+	TP0+
	4	TP2+	TP3+
	5	TP2–	TP3–
	6	TP1–	TP0–
	7	TP3+	TP2+
	8	TP3–	TP2–

Copyright © 2007, Nortel Networks
Nortel Networks Confidential

Nortel Ethernet Routing Switch 4548GT-PWR

The following table describes the RJ-45 connector pin assignments in the Nortel Ethernet Routing Switch 4548GT-PWR.

4548GT-PWR RJ-45 connector pin assignments

Connector	Pin Number	Signal	Description
	1	RX+/power+	Receive Data+/power+
	2	RX–/power+	Receive Data–/power+
	3	TX+/power–	Transmit Data+/power –
	4	Not applicable	Not applicable
	5	Not applicable	Not applicable
	6	TX-/power–	Transmit Data–/power –
	7	Not applicable	Not applicable
	8	Not applicable	Not applicable

Note: The Nortel Ethernet Routing Switch 4548GT-PWR uses pins 1, 2, 3, and 6 for the purposes of Power over Ethernet (PoE).

Nortel Ethernet Routing Switch 4550-T

The following table describes the RJ-45 connector pin assignments in the Nortel Ethernet Routing Switch 4550-T.

4550-T RJ-45 connector pin assignments

Connector	Pin Number	Signal for 10/100BaseT MDI configuration	Signal for 10/100BaseT MDI-X configuration
	1	Output transmit data + (TX+)	Input receive data + (RX+)
	2	Output transmit data – (TX–)	Input receive data – (RX–)
	3	Input receive data + (RX+)	Output transmit data + (TX+)
	6	Input receive data – (RX–)	Output transmit data – (TX–)
	4, 5, 7, 8	Not used	Not used
	Pin Number	**Signal for 1GBaseT MDI configuration**	**Signal for 1GBaseT MDI-X configuration**
	1	TP0+	TP1+

Copyright © 2007, Nortel Networks
Nortel Networks Confidential

Connector	Pin Number	Signal for 10/100BaseT MDI configuration	Signal for 10/100BaseT MDI-X configuration
	2	TP0–	TP1–
	3	TP1+	TP0+
	4	TP2+	TP3+
	5	TP2–	TP3–
	6	TP1–	TP0–
	7	TP3+	TP2+
	8	TP3–	TP2–

Nortel Ethernet Routing Switch 4550T-PWR

The following table describes the RJ-45 connector pin assignments in the Nortel Ethernet Routing Switch 4550T-PWR.

4550T-PWR RJ-45 connector pin assignments

Connector	Pin Number	Signal	Description
	1	RD+/power+	Receive Data+/power+
	2	RD–/power+	Receive Data–/power+
	3	TD+/power–	Transmit Data+/power –
	4	Not applicable	Not applicable
	5	Not applicable	Not applicable
	6	TD–/power–	Transmit Data–/power –
	7	Not applicable	Not applicable
	8	Not applicable	Not applicable

Console port pin assignments

"Console port pin assignments" (page 29) describes the console port pin assignments in the Nortel Ethernet Routing Switch 4500 Series.

Copyright © 2007, Nortel Networks
Nortel Networks Confidential

Note: Nortel Ethernet Routing Switch 4500 Series supports only CLI Quickstart use on the console port.

Console port pin assignments

Connector	Pin Number	Signal
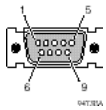	1	Carrier detect (not used)
	2	Transmit Data (TXD)
	3	Receive Data (RXD)
	4	Data terminal ready (not used)
	5	Signal ground (GND)
	6	Not used
	7	Request to send (not used)
	8	Not used
	9	Ring indicator (not used)

Universal Serial Bus (USB) ports

The Nortel Ethernet Routing Switch 4500 Series switches feature a USB port on the left side of the front panel. Switch administrators can use the USB port to perform tasks, previously performed through TFTP, with a USB Mass Storage Device (for example, a flash drive or thumb drive):

- download software
- back up the syslog
- generate and download the ASCII configuration file

File and system operations are limited by the storage capacity of the USB device in use.

Support is available only for USB drives that comply with the Mass Storage subsection of the USB 1.1 and USB 2.0 specification. Support does not extend to third-party devices that do not comply with these standards. Off-the-shelf drives that do not comply with these standards may not operate with the switch. Consult the documentation provided with the USB drive to ensure compliance with these standards.

Power specifications for the Nortel Ethernet Routing Switch 4500 Series

This section describes power specifications for the switches in the 4500 Series.

For information specific to your switch, consult the applicable topic:

- "Nortel Ethernet Routing Switch 4548GT, 4550T, and 4526FX" (page 30)

Copyright © 2007, Nortel Networks

- "Nortel Ethernet Routing Switch 4548GT-PWR and 4550T-PWR" (page 30)

The switches in the 4500 Series can use redundant power supplies (RPS). For information about power supplies and RPS, see the following topics:

- "Nortel Ethernet Routing Switch Redundant Power Supply 15 power specification" (page 31)
- "Nortel DC to DC converter module" (page 31)

Nortel Ethernet Routing Switch 4548GT, 4550T, and 4526FX

The following table describes the power specifications for the Nortel Ethernet Routing Switch 4548GT, 4550T, and 4526FX non PoE switches.

AC power specifications

	4548GT	**4550T**	**4526FX**
Input Current:	1.5 to 3.0 A	1.5 to 3.0 A	1.5 to 3.0 A
Input Voltage (rms):	100 to 240 VAC at 50 to 60 Hz	100 to 240 VAC at 50 to 60 Hz	100 to 240 VAC at 50 to 60 Hz
Power Consumption:	150 W maximum	150 W maximum	150 W maximum
Thermal Rating:	415 BTU/Hr maximum	240 BTU/Hr maximum	256 BTU/Hr maximum

Nortel Ethernet Routing Switch 4548GT-PWR and 4550T-PWR

The following table describes the power specifications for the Nortel Ethernet Routing Switch 4550GT-PWR and 4550T-PWR PoE switches.

AC power specifications

	4548GT-PWR	**4550T-PWR**
Input Current:	3.3 to 6.5 A	3.3 to 6.5 A
Input Voltage (rms):	100 to 240 VAC 50 to 60 Hz	100 to 240 VAC at 50 to 60 Hz
Power Consumption:	470 W maximum	470 W maximum
Thermal Rating:	788 BTU/Hr	615 BTU/Hr maximum
Inrush Current:	20 A 120 VAC at maximum load, 40 A 240 VAC at maximum load	20 A 120 VAC at maximum load, 40 A 240 VAC at maximum load

Copyright © 2007, Nortel Networks
Nortel Networks Confidential

	4548GT-PWR	4550T-PWR
Turn on Condition:	1 second maximum after application of AC power	1 second maximum after application of AC power
	Note: 12 V output rise time, from 10 to 90 percent, must be the maximum of 50 ms and monotonic under all defined input and output conditions.	
Efficiency:	70 percent minimum	70 percent minimum

Nortel Ethernet Routing Switch Redundant Power Supply 15 power specification

The Nortel Ethernet Routing Switch Redundant Power Supply 15 (RPS 15) provides a secondary power source for Nortel Ethernet Routing Switch 4500 Series devices. In addition, when connected to a Power over Ethernet (PoE) switch, such as the 4548GT-PWR or the 4550T-PWR, the RPS 15 can supplement the amount of Direct to Ethernet (DTE) power to deliver up to 740 watts of PoE.

Nortel DC to DC converter module

To use the Nortel Ethernet Routing Switch Redundant Power Supply Model 15 (RPS 15) with the Nortel Ethernet Routing Switch 4500 Series non-PoE models, 4548GT, 4550T, and 4526FX requires a DC-DC converter module. The DC–DC converter module plugs into the slot on the back of a non-PoE switch and connects the RPS to the switch.

For information about connecting the converter module to the Nortel Ethernet Routing Switch 4500 Series non-PoE models, 4548GT, 4550T, or 4526FX, see *DC-DC Converter Module for the Baystack 5000 Series Switch* (215081-A).

Connecting AC power

Power cord specifications

To connect AC power to the switch, you need an appropriate AC power cord as described in the "Preface" (page 11). See "International power cord specifications" (page 31) for plug specifications.

International power cord specifications

Country and Plug Specification	Specifications	Typical Plug
Continental Europe:	• 220 or 230 VAC	

Copyright © 2007, Nortel Networks

Country and Plug Specification	Specifications	Typical Plug
• CEE7 standard VII male plug • Harmonized cord (HAR marking on the outside of the cord jacket to comply with the CENELEC Harmonized Document HD-21)	• 50 Hz • Single phase	
United States of America / Canada / Japan: • NEMA5-15P male plug • UL-recognized (UL stamped on cord jacket) • CSA-certified (CSA label secured to the cord)	• 100 or 120 VAC • 50–60 Hz • Single phase	
United Kingdom: • BS1363 male plug with fuse • Harmonized cord	• 240 VAC • 50 Hz • Single phase	
Australia: • AS3112-1981 male plug	• 240 VAC • 50 Hz • Single phase	

DANGER
Use only power cords that have a grounding path. Without a proper ground, a person who touches the switch is in danger of receiving an electrical shock. Lack of a grounding path to the switch can result in excessive emissions. For a translation of this statement, see "Translations of safety messages" (page 53).

Connecting power to the back panel

Connect the AC power cord to the back of the switch and then connect the cord to an AC power outlet. "Connecting AC power to the back panel" (page 33) illustrates connecting the AC power cord to the switch back panel.

Note: The Nortel Ethernet Routing Switch 4500 Series has no AC power switch. When you connect the power cord to a suitable, energized AC power outlet, the switch powers up immediately.

Copyright © 2007, Nortel Networks
Nortel Networks Confidential

Connecting AC power to the back panel

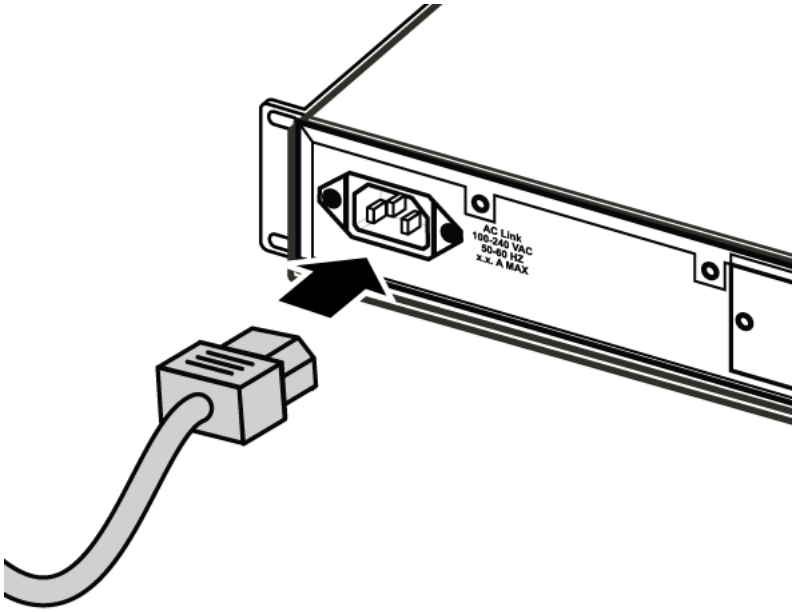

WARNING
Disconnecting the AC power cord is the only way to turn off AC power to the Nortel Ethernet Routing Switch 4500 Series. Always connect the AC power cord in a quickly and safely accessible location in case of an emergency. For a translation of this statement, see "Translations of safety messages" (page 53).

Checking LEDs on the Nortel Ethernet Routing Switch 4500 Series

The figures and tables in the following sections describe the LEDs on the Nortel Ethernet Routing Switch 4500 Series switches. The tables describe LED operation for a switch that finishes the power-on self-test.

Front panel LEDs

"Nortel Ethernet Routing Switch 4548GT" (page 34)"Nortel Ethernet Routing Switch 4548GT-PWR" (page 34),"Nortel Ethernet Routing Switch 4550T" (page 34)"Nortel Ethernet Routing Switch 4550T-PWR" (page 35) and "Nortel Ethernet Routing Switch 4526FX" (page 35)diagrams illustrate the components on the front panels of the Nortel Ethernet Routing Switch 4500 Series switches. For detailed explanations of the states indicated by each front panel LED type, see the following sections:

- "Switch LED state indicators" (page 36)
- "Port LED state indicators" (page 37)
- "SFP transceiver Port LED state indicators" (page 37)

Copyright © 2007, Nortel Networks
Nortel Networks Confidential

Nortel Ethernet Routing Switch 4548GT

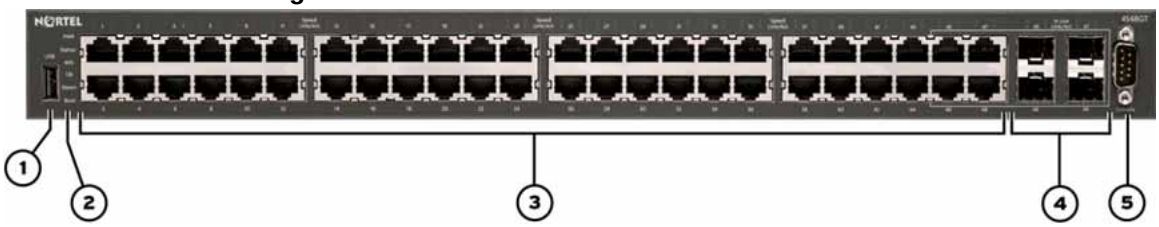

Nortel Ethernet Routing Switch 4548GT-PWR

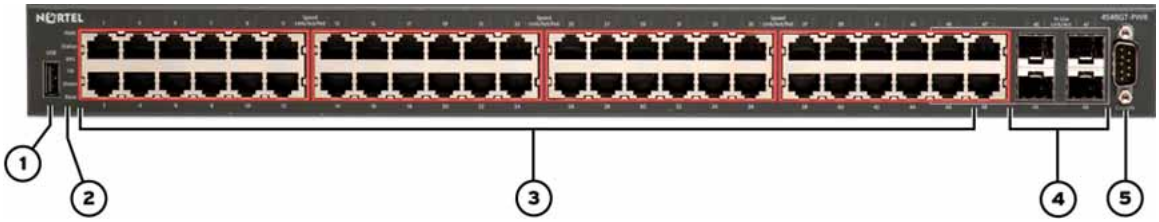

1. USB port
2. Switch LEDs
3. 10/100/1000 Mb/s Ports (LEDs above ports)
4. SFP Transceiver Ports (LEDs above ports)
5. Console Port

Nortel Ethernet Routing Switch 4550T

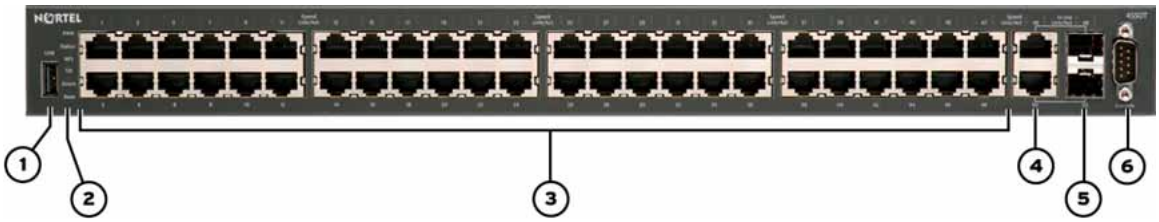

Copyright © 2007, Nortel Networks
Nortel Networks Confidential

Nortel Ethernet Routing Switch 4550T-PWR

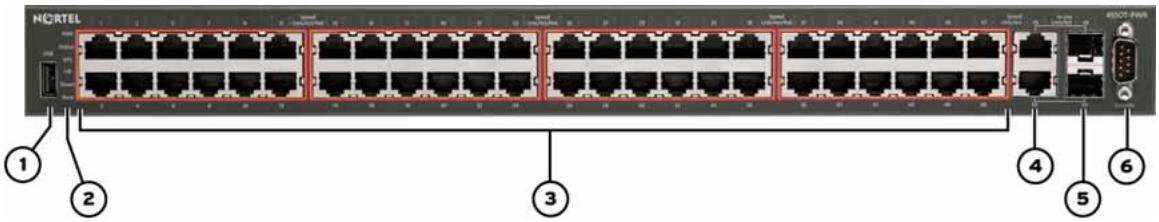

1. USB port
2. Switch LEDs
3. 10/100BaseTX ports (LEDs above ports)
4. 10/100/1000 RJ-45 ports (LEDs above ports)
5. SFP Transceiver Ports (LEDs above ports)
6. Console port

Nortel Ethernet Routing Switch 4526FX

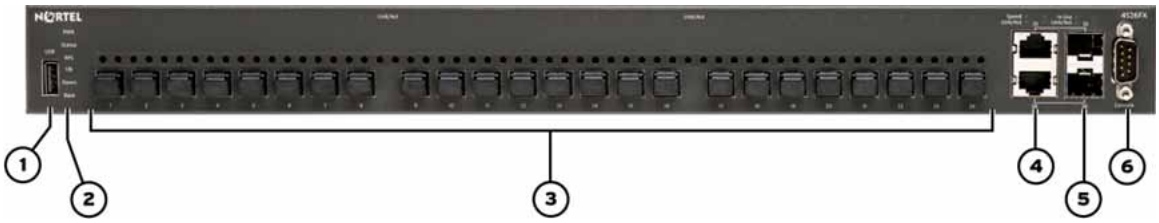

1. USB Port
2. Switch LEDs
3. 100BaseFX ports (LEDs above ports)
4. 10/100/1000 RJ-45 ports (LEDs above ports)
5. SFP Transceiver Port LEDs (LEDs above ports)
6. Console Port

WARNING
Fiber optic equipment can emit laser or infrared light that can injure your eyes. Never look into an optical fiber or connector port. Always assume that fiber optic cables are connected to a light source. For a translation of this statement, see "Translations of safety messages" (page 53).

Copyright © 2007, Nortel Networks
Nortel Networks Confidential

Switch LED state indicators

"Switch LED state indicators" (page 36) describes the main switch LED state indications provided by LED color and fluctuation cues.

Switch LED state indicators

Label	Color and Status	Description
Pwr	Green, steady	The switch is receiving power.
	Off	The switch is not receiving power, either from an AC power source or the redundant power supply (RPS).
Status	Green, steady	• **During boot-up:** The power-on self-test (POST) is complete and the switch is operating normally. • **After boot-up:** The switch is running the agent code successfully.
	Off	The switch failed the power-on self-test (POST) or failed to load the agent code.
RPS	Green, steady	The switch is connected to a redundant power supply unit (RPS) and is receiving power if necessary.
	Off	The switch is not connected to a RPS, the RPS is not supplying power, or the DC/DC module is not supplying power.
Up	Green, steady	The Cascade Up port has a physical connection to another unit.
	Amber, steady	The Cascade Up port has detected an error.
	Off	The switch is in stand-alone mode or no link exists to the Cascade Up port.
Down	Green, steady	The Cascade Down port has a physical connection to another unit.
	Amber, steady	The Cascade Down port detected an error.
	Off	The switch is in stand-alone mode or no link exists to the Cascade Down port.
Base	Green, steady	The switch is the stack base unit.
	Green, blinking	A configuration error occurred. Either multiple base units or no base units are configured in the stack.
	Amber, steady	The switch is operating as the temporary base unit in the stack configuration.
	Off	The switch is not the stack base unit or it is operating in stand-alone mode.

Copyright © 2007, Nortel Networks
Nortel Networks Confidential

Port LED state indicators

This section describes the port LED state indicators by color and fluctuation cues.

The following list describes the three port LEDs:

- Activity indicates the level of activity on the link.
- Link indicates the presence of an Ethernet link.
- Speed indicates the port speed (for example, 10 Mb/s, 100 Mb/s, 1000 Mb/s).

RJ-45 Port LED state indicators

Label	Color and Status	Description
Speed/PoE	Green, Pulse Green–Green	The port is set to operate at 1000 Mb/s on the ERS 4548GT-PWR, and 100 Mb/s on the ERS 4550T-PWR (PoE models).
	Green, Steady	The port is set to operate at 1000 Mb/s on the ERS 4548GT and 100 Mb/s on the ERS 4550T.
	Amber, Pulse Amber–Amber	The port is set to operate at 100 Mb/s on the ERS 4548GT-PWR and 10 Mb/s on the ERS 4550T-PWR (PoE models).
	Amber, Steady	100 Mb/s on the ERS 4548GT and 10 Mb/s on the ERS 4550T.
	Amber, Green Pulse	The port is experiencing a PoE error.
	Off	When the Link/Activity LED is green and the Speed LED is off, the port is set to operate at 10 Mb/s for the ERS 4548GT or 4548GT-PWR models.
Link / Activity	Green, Steady	The link established but no data activity exists.
	Green, Blink	The link is established and data activity exists (the blink rate indicates the level of activity).
	Green, Slow Blink	The software disabled the port.
	Amber, Blink	Not applicable.
	Off	The port has no link or activity.

SFP transceiver Port LED state indicators

Label	Color and Status	Description
In Use	Green, Blink	Not applicable.
	Green, Steady	The SFP port and the transmit port are active.
	Amber, Blink	Not applicable.
	Off	No SFP transceiver is present.

Copyright © 2007, Nortel Networks
Nortel Networks Confidential

Label	Color and Status	Description
Link / Activity	Green, Blink	Activity exists on the port.
	Green, Slow Blink	Software disabled this port.
	Green, Steady	The link is operating normally.
	Off	No link exists.

Setting IP parameters for the Nortel Ethernet Routing Switch 4500 Series

After a Nortel Ethernet Routing Switch 4500 Series switch starts up and initializes all software modules, it begins switching operations.

To manage the switch using Telnet or SNMP, or to perform TFTP operations, you must set certain IP parameters. Also, if you intend to connect the switch to a stack configuration, you must assign additional parameters to ensure proper stack operation.

For more information about the QuickStart and switch configuration, see the system configuration guide listed in "Related publications" (page 12).

You must configure the following IP parameters for initial switch setup:

- IP address of the switch or stack
- subnet mask
- gateway address

Use the following procedures to set initial IP Parameters:

- "Setting IP parameters using the console port and CLI Quickstart" (page 38)
- "Setting IP parameters using the console port and CLI" (page 40)
- "Setting IP parameters using IP.CFG file on a USB memory device" (page 42)
- "Setting IP parameters using bootp" (page 42)
- "Setting IP parameters using the Web-based Management Interface" (page 42)

Setting IP parameters using the console port and CLI Quickstart

To set IP parameters for a switch configured with the factory default settings, perform the following procedure using the console port and CLI Quickstart:

Step	Action
1	Connect a terminal to the console port of the switch.

Copyright © 2007, Nortel Networks

You can use any terminal or PC with an appropriate terminal emulator as the management station." Terminal emulation settings" (page 39) lists the parameters that you must use with any terminal emulation software used to connect to the switch.

Terminal emulation settings

Property	Value
Baud Rate	9600 bps
Data Bits	8
Stop Bits	1
Parity	None
Flow Control	None

You require a console cable and connector to match the male DTE connector (DB-9) on the switch to connect the terminal to the switch console port.

2 Set the terminal protocol on the terminal or terminal emulation program to VT100 and VT100/ANSI.

3 Connect to the switch using the terminal or terminal emulation application.

4 When the switch configuration is set to factory default the following screen appears. Enter the information requested at each prompt.

CLI Quickstart welcome screem

```
Welcome to the 4548GT-PWR setup utility. You
will be requested for information to initially
configure for the switch. When finished the
information will be applied and stored in
the switch NVRAM.  Once the basic parameters
are configured, additional configuration can
proceed using other management interfaces.
Press ^C to abort at any time.
```

The in-band IP Address prompt line appears

```
Please provide the in-band IP Address[0.0.0.0]:
10.127.232.30
```

The in-band sub-net mask prompt line appears

```
Please provide the in-band sub-net mask[0.0.0.0]:
255.255.255.0
```

The Default Gateway prompt line appears

```
Please provide the Default Gateway[0.0.0.0]:10.1
27.232.1
```


Copyright © 2007, Nortel Networks

The Read-Only Community String prompt line appears

```
Please provide the Read-Only Community
String[**********]:******
```

The confirm Read-Only Community String prompt line appears

```
Please confirm the Read-Only Community
String[**********]:******
```

The Read-Write Community String prompt line appears

```
Please provide the Read-Write Community
String[**********]:*******
```

The confirm Read-Write Community String prompt line appears

```
Please confirm the Read-Write Community
String[**********]:*******
```

The Quick Start VLAN prompt line appears

```
Please provide the Quick Start VLAN <1-4094> [1]:
```

The Basic Switch parameters configuration confirmation appears

```
Basic switch parameters have now been configured and
saved.
```

—End—

Note: Nortel Ethernet Routing Switch 4500 Series console port supports Nortel CLI only. When the switch is set to factory default parameters, the CLI Quickstart displays.

Setting IP parameters using the console port and CLI

If the switch is configured beyond factory default settings, perform the following procedure to set IP parameters using the console port and Command Line Interface (CLI):

Step	Action
1	Connect a terminal to the console port of the switch. Any terminal or PC with an appropriate terminal emulator can be used as the management station. See "Setting IP parameters using the console port and CLI Quickstart" (page 38).
2	Set the terminal protocol on the terminal or terminal emulation program to VT100 or VT100/ANSI.

Copyright © 2007, Nortel Networks
Nortel Networks Confidential

3 Connect to the switch using the terminal or terminal emulation application.

4 After the Nortel banner appears, press **CTRL + Y** to display the main menu. Depending on whether the switch is stand-alone or in a stack configuration the stand-alone switch main menu or the stack switch main menu displays.

5 From the main menu, select **Command Line Interface...**

6 To enter the Global Configuration command mode, use the **enable** command.

7 At the prompt, enter the **configure terminal** command.

8 At the prompt, enter the **ip address** command to set the switch or stack IP address.

Following is the **ip address** command syntax:

```
ip address [stack | switch} <ip address> [netmak
<subnet mask>] [default-gateway <gateway address>]
```

The following table describes the **ip address** command parameters.

Table 1
ip address parameters

Parameter	Description
[stack | switch]	Use either the stack or switch key word to set the appropriate IP address.
<ip_address>	The IP address to be used.
<subnet_mask>	The subnet mask to be used.
<gateway_address>	The default gateway address to be used.

—End—

The IP configuration is now complete.

To continue configuration, use the appropriate CLI commands.

To disconnect from the switch, do the following:

Step	Action
1	To return to the Console Menu, use the **logout** command.
2	Select **Logout** from the main menu.

Copyright © 2007, Nortel Networks
Nortel Networks Confidential

—End—

Setting IP parameters using IP.CFG file on a USB memory device

If the swtich does not obtain an IP address using bootp, and, if a file named IP.CFG exists on the USB memory device, then the switch loads the IP.CFG file as its configuration.

See also " Universal Serial Bus (USB) ports" (page 29)

Setting IP parameters using bootp

The Nortel Ethernet Routing Switch 4500 Series switches are configured to obtain a management IP address using Dynamic Host Control Protocol (DHCP) by default.

If the switch is connected to the network and an appropriate bootp server is configured, then the server assigns an IP address to the switch.

To view the assigned and in-use IP addresses, connect to the switch console and use the **`show ip`** command.

Setting IP parameters using the Web-based Management Interface

To set IP parameters using the Web-based Management Interface, perform the following procedure:

Step	Action
1	Use the procedure "Setting IP parameters using the console port and CLI Quickstart" (page 38), to assign a default IP address to the switch.
2	Connect a computer to the switch through a data port using a standard RJ-45 network cable.
3	Open a web browser on the attached computer and enter the factory default IP address of the switch in the following format: ***http://<nnn.nnn.nnn.nnn>***. The main screen of the Web-based Management Interface appears.
4	Select **Configuration > IP** from the menu. "IP configuration screen" (page 43) appears.

Copyright © 2007, Nortel Networks
Nortel Networks Confidential

IP configuration screen

Configuration > IP

IP Setting

Unit 1 2

	Configurable	In Use	Last BootP
BootP Request Mode	BootP Disabled		
In-Band Stack IP Address	192.168.248.206	192.168.248.206	0.0.0.0
In-Band Switch IP Address	0.0.0.0	0.0.0.0	0.0.0.0
In-Band Subnet Mask	255.255.255.0	255.255.255.0	0.0.0.0
Default Gateway	192.168.248.1	192.168.248.1	0.0.0.0

Submit

5 Use the fields on the IP configuration screen to configure the IP parameters. All fields are divided into three columns: **Configurable**, **In Use**, and **Last BootP**. Use the **Configurable** column to configure a new value for the field. The **In Use** column represents the current value used by the switch, and the **Last BootP** column supplies a value assigned to the field by a BootP request. "IP Configuration fields" (page 43) lists and describes the fields on the IP configuration screen.

IP Configuration fields

Field	Description
In-Band Stack IP Address	The IP address used by the switch when it is part of a stack.
In-Band Switch IP Address	The IP address used by the switch when it is a stand-alone unit.
In-Band Subnet Mask	The subnet mask used by the switch.
Default Gateway	The default gateway used by the switch.

6 Click **Apply**.

—End—

Note: Changes that occur to IP parameters during this procedure can result in the loss of browser connectivity to the switch.

You must ensure that your IP address and subnet mask setting matches the IP address and subnet mask setting of the network where the switch resides.

Copyright © 2007, Nortel Networks Nortel Networks Confidential

Nortel Ethernet Routing Switch 4500 series stacking

The Nortel Ethernet Routing Switch 4500 Series provides fail-safe stackability. You can connect up to eight 4500 Series devices in a stack to provide uninterrupted connectivity for up to 400 ports. The stack is managed as a single unit.

Stack connector

The stack connector is a component of the Nortel Ethernet Routing Switch 4500 Series back panel and consists of the Unit Select switch, Cascade Down connector, and Cascade Up connector. The stack connector is illustrated in the "Stack connector" (page 44) diagram.

Stack connector

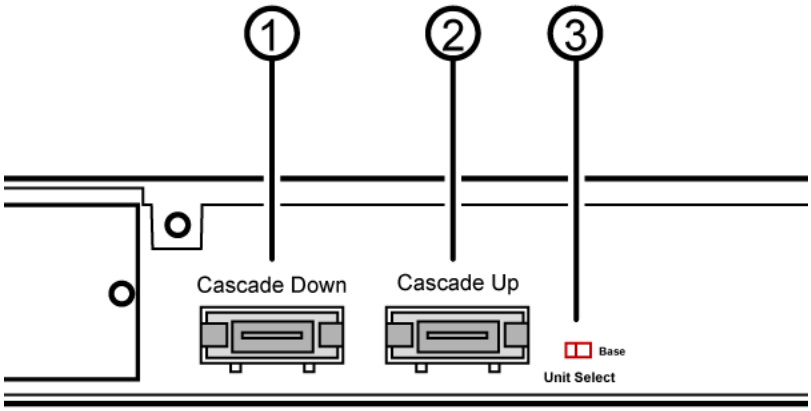

1= Cascade down connector
2= Cascade up connector
3= Unit select switch

Unit Select switch

Use the Unit Select switch to designate a switch in the stack as the *base unit*. Slide the Unit Select switch to the right to designate a switch as the base unit. You can designate only one switch in a stack as the base unit; that is, with the switch in the base unit position. For all other switches in the stack, the Unit Select switch must be in the left position.

The base unit designation for a switch is also displayed on the front panel LED display (see "Switch LED state indicators" (page 36)).

Copyright © 2007, Nortel Networks
Nortel Networks Confidential

Cascade Down connector

Use the Cascade Down connector to connect a switch to the next unit in the stack through a cascade cable. Connect the other end of the Cascade Down cable to the Cascade Up connector of the next switch in the stack. A return cable from the Cascade Down connector of another unit to the Cascade Up connector of the first unit completes the stack connection (see "Simplified stacking diagram" (page 45)"Connecting cascade cables" (page 46)).

> ***Note:*** To create a stack connection, order the appropriate Nortel Ethernet Routing Switch 4500 Series cascade cables to ensure fail-safe stacking. A 1.5 foot stacking cable is included with the switch. For stacking three or more units (maximum 8 units per stack), order the 5', 10', 14' or 16.4' cables as applicable.

Cascade Up connector

The Cascade Up connector provides an attachment point that accepts a cascade cable connection from another unit in the stack. A return cable from the Cascade Down connector of one switch to the Cascade Up connector of an adjacent switch completes the stack connection. See "Simplified stacking diagram" (page 45) and "Connecting cascade cables" (page 46).

"Simplified stacking diagram" (page 45) illustrates a simple, two-switch stack connection.

Simplified stacking diagram

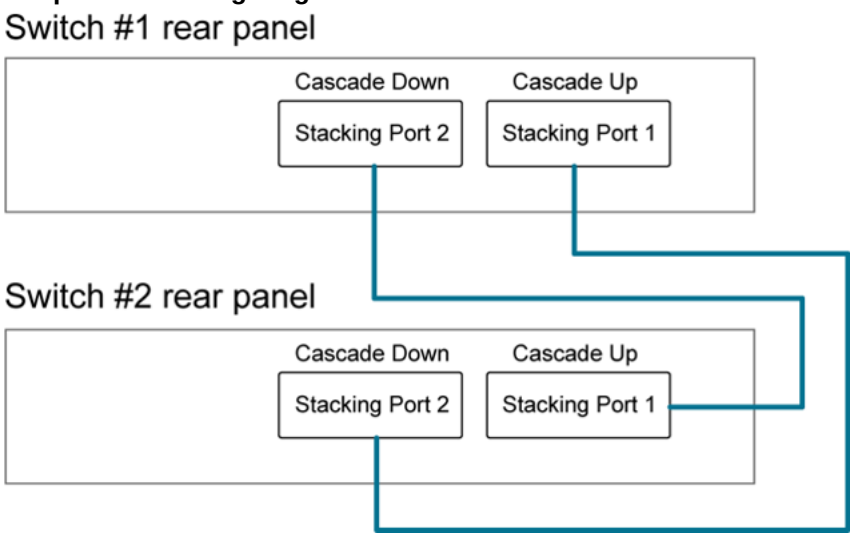

"Connecting cascade cables" (page 46) illustrates a typical crossover connection configuration. Failure to use this configuration can result in loss of connectivity.

Copyright © 2007, Nortel Networks

Connecting cascade cables

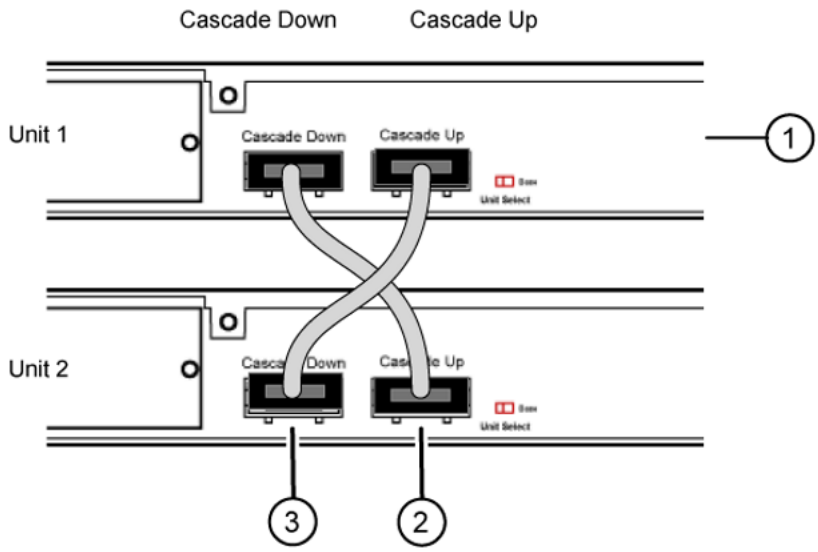

1. Base Unit
2. Cascade Cable (connected from Base Unit Cascade Down connector to Unit 2 Cascade Up connector)
3. Cascade Cable (connected from Unit 2 Cascade Down connector to Base Unit Cascade Up Connector)

Initial installation unit number assignment

When you install the stack, the software automatically determines the physical order of all units in the stack according to the position of the base unit within the stack. Thereafter, the individual units maintain their original unit numbering, even if you change the position of one or more units in the stack.

For example, when you initially power the stack, the base unit becomes unit 1 and the unit that the base unit connects to (across the Cascade Down cable) becomes unit 2. The next unit is designated as unit 3, and so on, until the maximum stack configuration (up to eight units) is reached. If another unit in the stack is designated as the base unit, the new base unit keeps its originally designated unit number in the stack.

Stack MAC address

When a switch participates in a stack configuration, a stack MAC address is automatically assigned during stack initialization. The stack MAC address is the base unit MAC address plus 1. If another unit in the stack is assigned

Copyright © 2007, Nortel Networks
Nortel Networks Confidential

as the base unit, the new stack MAC address is the MAC address of the new base unit plus 1. The original stack IP address still applies to the new base unit.

Temporary base unit

If an assigned base unit fails, the next unit in the stack order automatically becomes the new temporary base unit. The LED display on the front panel of the temporary base unit changes to a steady amber state to indicate the change. When this happens, use the Unit Select switch to designate the temporary base unit as the base unit until you repair or replace the failed base unit.

You must designate a base unit because the automatic failover is only a temporary safeguard and, if the original unit rejoins the stack, it does not resume base unit status. Also, if the stack configuration loses power, the temporary base unit does not resume base unit status when power is restored.

> ***Note:*** If the temporary base unit is not assigned as the new base unit, and the temporary base unit fails, the next unit in the stack order becomes the temporary base unit. This process continues after successive failures until only two units are left in the stack.

Redundant cascade stacking

The Nortel Ethernet Routing Switch 4500 Series allows a stack of up to eight units into a dual-path cascade stack. If any single unit fails, or if a cable is accidently disconnected, other units in the stack remain operational.

In addition to increasing bandwidth, the software uses the cables to provide two paths between units. If one path is interrupted, the data travels over the remaining path at half the normal interswitch bandwidth.

"Redundant cascade stacking" (page 48) shows a typical example of a stack configuration reacting to a failed connection in the stack configuration.

Copyright © 2007, Nortel Networks
Nortel Networks Confidential

Redundant cascade stacking

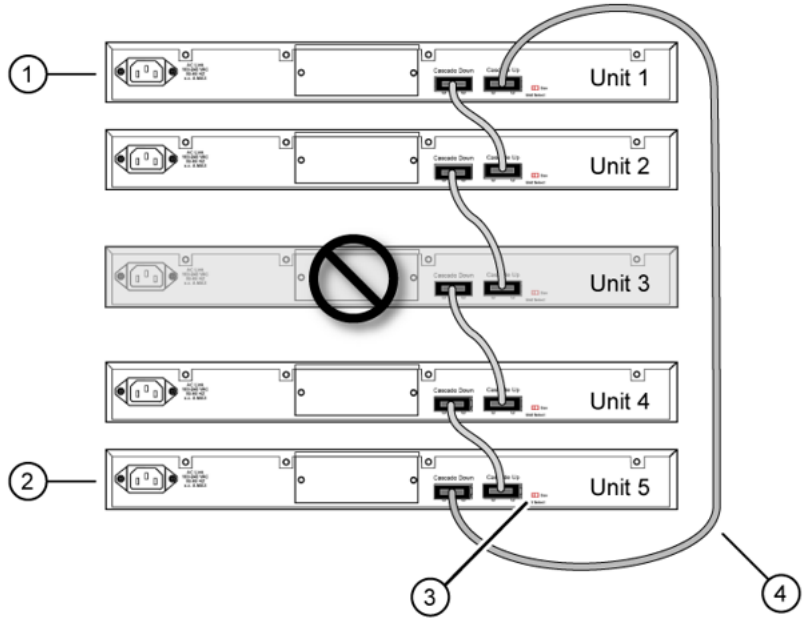

1. Base Unit
2. Last Unit
3. Unit selector switch
4. Cascade Cable

In the example, the following occur:

- Unit 3 becomes non-operational due to a unit failure, cable disconnection, or a loss of power.
- Units 2 and 4, directly upstream and downstream from Unit 3, sense the loss of link signals from unit 3. The software directs all the data to traverse the remaining path.
- The Cascade Down LED for Unit 2 and the Cascade Up LED for Unit 4 turn amber to indicate an error.
- The remaining stack units remain connected and continue to operate.

Replacing or adding a stack unit

To replace a failed stack unit or insert a new unit into a stack, perform this procedure.

Note: Automatic Unit Replacment (AUR) for both configuration and software is enabled for all Nortel Ethernet Routing Switch 4500 Series platforms and software releases. This means that the agent code image, on a replacement unit, is automatically upgraded or downgraded to

Copyright © 2007, Nortel Networks
Nortel Networks Confidential

match the software running on the stack. In addition, when a like-for-like replacement of a failed unit occurs, any port-specific configuration is restored .

Step	Action
1	Remove the failed switch from the stack.
2	Obtain a like-for-like replacement switch.
3	With the new unit powered off, physically insert the new unit in the stack and reconnect the stack cables.
4	Turn on the new unit. *Depending on the software load on the replacement switch, it may automatically reboot one or two times before joining the stack as a fully operational member.*
5	Check the log file on the stack to ensure that the replacement unit correctly joined the stack. The log file displays AUR information messages.

—End—

If the base unit is being replaced, remember that the stack has elected a temporary base unit and the new unit does not automatically assume the base unit status. Configure the new unit as the base unit, using the Unit Select switch, and reset the Unit Select switches of the other stack members to non-base units.

Removing a stack unit

If you remove a unit from the stack (to operate in stand-alone mode), the following switch configuration settings revert to those configured before the unit became a member of the stack:

- IP address
- Web, Telnet, and SNMP passwords
- SNMP community strings

Stacking configurations

Because stack parameters are associated with the base unit, the physical stack order depends on the base unit position and whether you configure the stack cascade up (stack up) or cascade down (stack down). This designation depends on the stack cabling arrangement. Nortel recommends that you use Cascade Down configuration. (see "Cascade down" (page 50)

Copyright © 2007, Nortel Networks
Nortel Networks Confidential

Cascade down

In a cascade down configuration, the base unit is located at the top of the stack. The system automatically numbers the physical units based on the designated base unit (Unit 1). The cable connected to the Cascade Down connector of the base unit terminates in the Cascade Up connector on the next unit in the stack, which is located below the base unit. This next unit is designated Unit 2. The stack is wired downward through the units and the system continues to number in this manner throughout the stack. In this configuration, the base unit discovers the stack in a cascade down (stack down) direction. The following illustration demonstrates a typical cascade down (stack down) configuration.

Cascade Down (Stack Down) configuration

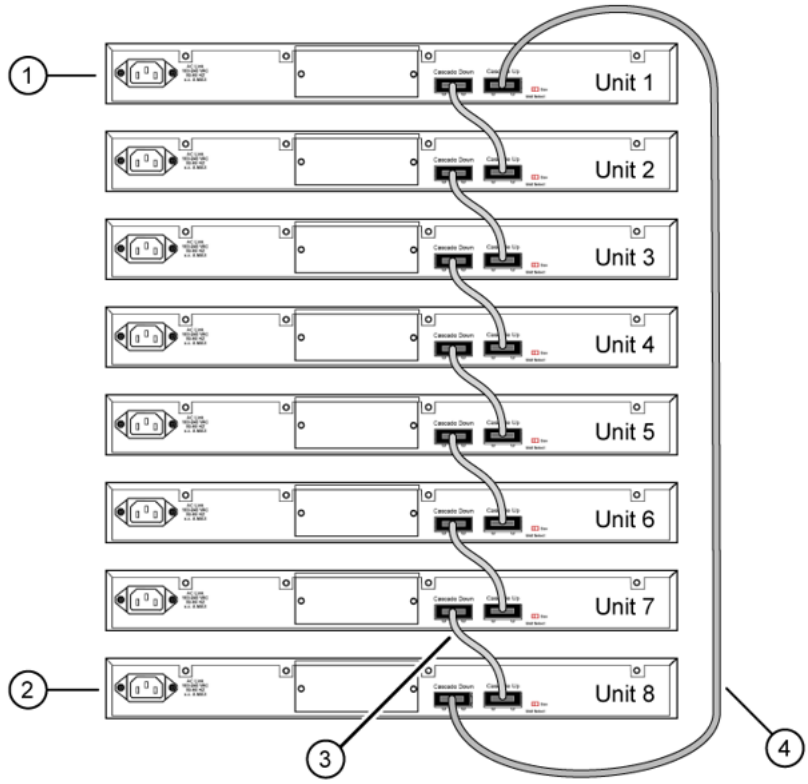

1. Base Unit
2. Last Unit
3. Cascade Cable
4. Cascade Cable

Note: Since many network management software packages assume a cascade down (stack down) configuration, Nortel recommends that you use a cascade down configuration.

Copyright © 2007, Nortel Networks
Nortel Networks Confidential

Cascade up

In a cascade up (stack up) configuration, the base unit is physically the top unit in the stack. The cable connected to the Cascade Down connector of the base unit terminates in the Cascade Up connector physically at the bottom of the stack. This next unit is designated Unit 2. The stack is wired upward through the units and the system continues to number in this manner throughout the stack. In this configuration, the base unit discovers the stack in a cascade up (stack up) direction. The following illustration demonstrates a typical cascade up (stack up) configuration.

Cascade Up (Stack Up) configuration

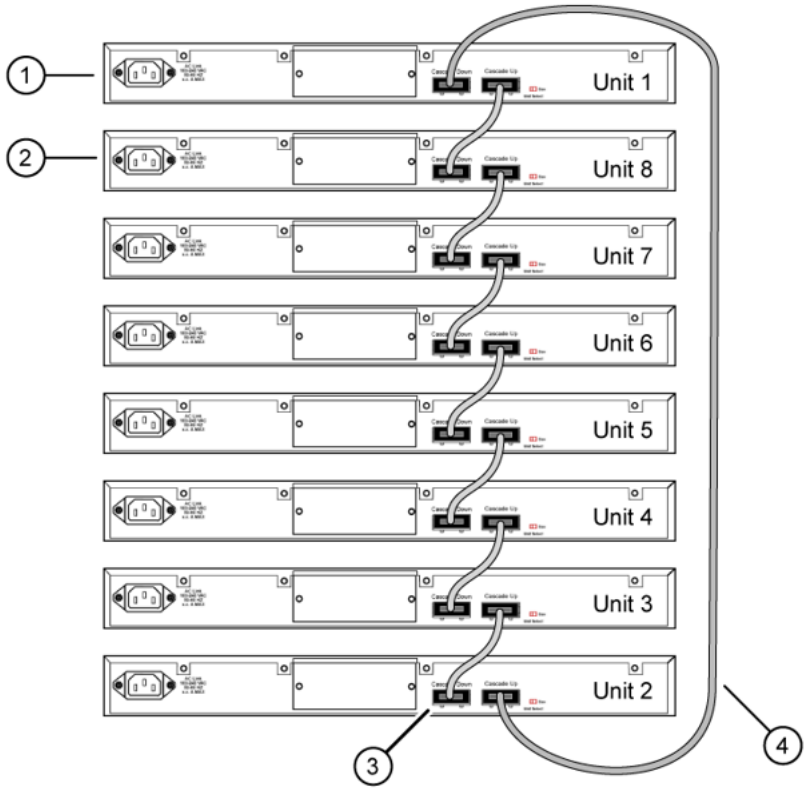

1. Base Unit
2. Last Unit
3. Cascade Down connector with cable connected
4. Cascade Cable

Note: Because many network management software packages use a cascade down (stack down) configuration, Nortel recommends that you use a cascade down configuration. (See "Cascade down" (page 50)

Copyright © 2007, Nortel Networks
Nortel Networks Confidential

Regardless of stack configuration, the following guidelines apply:

- When you apply power to the stack, the base unit initializes, typically within 60 seconds, and the entire stack powers up as a single logical unit.
- You can attach an RS-232 communications cable to the console port of any switch in the stack to establish a console connection.
- You can perform a software upgrade on the stack from any switch using a Telnet session, the Web-based Management Interface, or any SNMP-based management software.
- You can manage the stack using a Telnet session, Web-based Management Interface, or any SNMP-based management software through any stack switch port.
- When you stack two or more switches, use the 3-foot cascade max-return cable (AL4518002-E6) to complete the link from the last unit in the stack to the base unit.

Copyright © 2007, Nortel Networks
Nortel Networks Confidential

Translations of safety messages

CAUTION
When you mount this device in a rack, do not stack units directly on top of one another. You must secure each unit to the rack with appropriate mounting brackets. Mounting brackets cannot support multiple units.

ATTENTION

Achtung:
Wenn diese Einheit in einem Rack montiert wird, muß ein gewisser Abstand zur nächsten Einheit gelassen werden. Jede Einheit muß mit geeignetem Befestigungsmaterial gesichert werden. Das Befestigungsmaterial ist nicht für die gleichzeitige Befestigung mehrerer Einheiten geeignet.

ATTENTION
Si vous installez le module dans une baie, ne l'empilez pas directement sur un autre. Chaque module doit être fixé à sa propre baie à l'aide des supports de montage appropriés. Ces supports ne sont pas conçus pour résister à plusieurs modules.

ATTENTION

Precautión:
Cuando monte este dispositivo en un bastidor, no apile las unidades directamente una encima de otra. Cada unidad debe fijarse en el bastidor con las abrazaderas de montaje adecuadas. Las abrazaderas de montaje no están diseñadas para sostener varias unidades.

ATTENTION
Se il dispositivo viene installato in un rack, non impilare le unità direttamente una sull'altra. Ogni unità deve essere fissata al rack con le staffe di montaggio appropriate. Le staffe di montaggio non sono state progettate per supportare più unità.

警告：在机架中安装此设备时，请勿将多个部件叠放在机架中。必须用合适的安装托架将各个部件固定在机架中。安装托架无法支撑多个部件。

Copyright © 2007, Nortel Networks
Nortel Networks Confidential

注意：この装置をラックに設置する場合は、ラック内のユニットを直接積み重ねないようにしてください。各ユニットは専用の取り付けブラケットでラックに固定する必要があります。取り付けブラケットは複数のユニットを支えるようには設計されていません。

注意：在機箱中掛載此裝置時，請不要直接在機箱中的另一個裝置上直接堆放裝置。每一裝置都必須使用適當的掛載托架以固定在機架中。掛載托架不能用來支撐多個裝置。

CAUTION

If you are not installing a module in the slot, be sure to keep the metal cover plate in place over the slot. Removing the cover plate impedes airflow and proper cooling of the unit.

ATTENTION

Achtung:

Wenn Sie kein Modul im Schacht verwenden, muß die Metallabdeckung über dem Schacht montiert sein. Eine Entfernung der Abdeckung führt zu einer Verschlechterung der Luftzirkulation und damit zu einer nicht ausreichenden Kühlung der Einheit.

ATTENTION

Si vous n'installez pas le module dans une baie, veillez à laisser la plaque métallique sur la baie. Si vous la retirez, l'aération du module ne peut pas s'effectuer correctement.

ATTENTION

Precaution:

Si no instala ningún módulo en la ranura, asegúrese de mantener la placa de la cubierta de metal en la misma. Si la retira, impedirá que el aire circule y la unidad se refrigere adecuadamente.

ATTENTION

Attenzione:

Se nello slot non vengono installati moduli, assicurarsi di mantenere la piastra di copertura metallica in sede sopra lo slot. La rimozione della piastra impedisce la ventilazione e il corretto raffreddamento dell'unità.

注意：この装置をラックに設置する場合は、ラック内のユニットを直接積み重ねないようにしてください。各ユニットは専用の取り付けブラケットでラックに固定する必要があります。取り付けブラケットは複数のユニットを支えるようには設計されていません。

Copyright © 2007, Nortel Networks

注意：スロットにモジュールを取り付けない場合は、スロットにある金属製のカバープレートが外れないように注意してください。カバープレートを動かすと気流が妨げられ、適切なユニット冷却が行われなくなります。

注意：如果您未在插槽中安裝模組，請確定金屬殼板正確地蓋在插槽上。移除殼板會阻礙空氣流通以及裝置的適當冷卻度。

警告：如果您不打算在该插槽中安装任何模块，请务必使金属盖板正确地盖住该插槽。如果取下盖板，将妨碍通风及部件散热。

警告：この装置の電源は、電源コードを抜かない限り切断できません。緊急の場合にすばやく安全に切断できる場所に電源コードを接続してください。

警告：若要關閉此裝置的電源，拔掉插頭是唯一的方法。 爲了因應緊急狀況，請將電源線連接到可以快速插拔的地方。

WARNING
Disconnecting the AC power cord is the only way to turn off AC power to this device. Always connect the AC power cord in a quickly and safely accessible location in case of an emergency.

ATTENTION

Warnung:
Das Gerät kann nur durch Ziehen des Netzsteckers ausgeschaltet werden. Schließen Sie das Netzkabel an einer Steckdose an, die in Notfällen schnell und sicher zugänglich ist.

ATTENTION

Avertissement:
Pour mettre le module hors tension, vous devez impérativement déconnecter le cordon d'alimentation. En outre, vous devez dégager un espace minimal dans la zone de câblage pour pouvoir y accéder facilement en cas d'urgence.

警告：断开交流电源线是切断本设备的交流电源的唯一方法。交流电源线一定要连接到在紧急时刻可以快速安全地接触到的位置。

ATTENTION

Advertencia:
Para apagar el dispositivo debe desenchufar el cable. Conecte siempre el cable de alimentación a una toma segura y de fácil acceso por si se produjera alguna situación de emergencia.

Copyright © 2007, Nortel Networks
Nortel Networks Confidential

ATTENTION

Avviso:
L'unico modo per disattivare questo dispositivo consiste nello scollegare il cavo di alimentazione. Collegare sempre il cavo di alimentazione ad una presa che sia facilmente e rapidamente accessibile in caso di emergenza.

DANGER
Use only power cords that have a grounding path. Without a proper ground, a person who touches the switch is in danger of receiving an electrical shock. Lack of a grounding path to the switch can result in excessive emissions.

ATTENTION

Vorsicht:
Verwenden Sie nur Netzkabel mit Schutzerdung. Ohne ordnungsgemäße Schutzerdung besteht für Personen, die den Switch berühren, die Gefahr eines elektrischen Schlages. Eine nichtvorhandene Schutzerdung kann zu sehr starken Abstrahlungen führen.

DANGER
N'utilisez que des cordons d'alimentation équipés de trajet de mise à la terre. Sans mise à la terre adaptée, vous risquez de recevoir une décharge électrique en touchant le commutateur. Par ailleurs, l'absence de trajet de mise à la terre peut générer des émissions excessives.

ATTENTION

Peligro:
Utilice únicamente cables de alimentación con toma de tierra. De lo contrario, al tocar el interruptor puede recibir una descarga eléctrica. Si no hay un circuito de toma de tierra en el enchufe, puede producirse un exceso de emisiones.

ATTENTION

Pericolo:
Utilizzare esclusivamente cavi di alimentazione dotati di un percorso per la messa a terra. Senza un'adeguata messa a terra, chiunque tocchi lo switch corre il rischio di ricevere una scossa elettrica. L'assenza di un percorso per la messa a terra verso lo switch può comportare un eccesso di emissioni.

危険：接地経路を持つ電源コードを必ず使用するようにしてください。適切な接地がない状態でスイッチに触ると、感電する危険性があります。また、スイッチへの接地経路がないと、過度な放電を引き起こす可能性があります。

危险：请仅使用接地的电源线。如果电源线不接地或接地不当，接触交换机的人员可能会受到电击。如果交换机不接地，则可能导致放电过量。

Copyright © 2007, Nortel Networks
Nortel Networks Confidential

Index

A

Accessing technical assistance 13

C

Cable requirements 23
Connecting AC power 31
Console pin assignments 28

E

Electrostatic discharge 16
Environmental requirements 17
ESD 16

I

Initial IP parameters 38
Installing the Nortel Ethernet Routing Switch 15

P

Package contents 18
Power specifications 29
Preface 11

R

Rack installation 21
Related publications 12
RJ-45 pin assignments 25

S

Setting IP parameters 38
Setting IP parameters console port and CLI Quickstart 38
Setting IP parameters using bootp 42
Setting IP parameters using console port and CLI 40
Setting IP parameters using IP.CFG on USB device 42
Setting IP parameters using Web-based MI 42
SFP installation 23
SFP removal 24
Shelf installation 19
Stack configuration 44
Switch LEDs 33
Switch platforms

T

Table installation 19
Translations of safety messages 53

U

USB ports 29

Copyright © 2007, Nortel Networks
Nortel Networks Confidential

Copyright © 2007, Nortel Networks
Nortel Networks Confidential

Nortel Ethernet Routing Switch 4500 Series

Installation Guide

Copyright © 2007, Nortel Networks
All Rights Reserved.

Publication: NN47205-300
Document status: Standard
Document version: 02.01
Document date: 23 February 2007

To provide feedback, or report a problem in this document, go to www.nortel.com/documentfeedback

Sourced in Canada and the United States of America.

The information in this document is subject to change without notice. Nortel Networks reserves the right to make changes in design or components as progress in engineering and manufacturing may warrant.

*Nortel, Nortel Networks, the Nortel logo and the Globemark are trademarks of Nortel Networks.