Nortel Communication Server 1000

Communication Server 1000E Planning and Engineering — High Scalability Solutions

Release: 7.0
Document Revision: 01.01

www.nortel.com

NN43041-221

Nortel Communication Server 1000
Release: 7.0
Publication: NN43041-221
Document release date: 4 June 2010

Copyright © 2010 Nortel Networks. All Rights Reserved.

While the information in this document is believed to be accurate and reliable, except as otherwise expressly agreed to in writing NORTEL PROVIDES THIS DOCUMENT "AS IS" WITHOUT WARRANTY OR CONDITION OF ANY KIND, EITHER EXPRESS OR IMPLIED. The information and/or products described in this document are subject to change without notice.

Nortel, Nortel Networks, the Nortel logo, and the Globemark are trademarks of Nortel Networks.

All other trademarks are the property of their respective owners.

Contents

New in this release 9

Features 9

Other changes 9

Revision history 9

How to get help 11

Getting help from the Nortel Web site 11

Getting help over the telephone from a Nortel Solutions Center 11

Getting help from a specialist by using an Express Routing Code 12

Getting help through a Nortel distributor or reseller 12

Introduction 13

Conventions 13

Supported hardware platforms 14

Document References 15

Overview 17

Introduction to High Scalability 17

System deployment models 19

Campus Redundancy 20

Geographic Redundancy 21

Multiple HA groups dispersed geographically 22

General requirements 22

Key Communication Server 1000E package requirements 23

Hardware and software requirements 23

Management tools 25

Unified Communications Management 26

Element Manager 26

Deployment Manager 26

Subscriber Manager and phone provisioning 27

System management reliability and redundancy 28

Security requirements 29

Unified Communication Manager navigation and access control 29

ISSS robustness and scalability 29

ISSS management scalability 30

Copyright © 2010 Nortel Networks. All Rights Reserved.

Scalability enhancements 30
SMG scalability 30
UCM registration robustness and simplification 30
Element Manager 31
Personal Directory scalability 31
Network Routing Service 31
SIP Trunk and SIP Line 32
IP Line 32
Call Server scalability 32
High Scalability system Signaling Server requirements 32
General configuration requirements 32
Survivable SIP Media Gateway 33
Survivable Media Gateway and Survivable SIP Media Gateway 34
General deployment considerations 34
Planning 34
Zone Based Dialing 35
Media Gateway Controller migration 35
Total capacity 36
Physical configuration 36
Large network deployment 36
Element Manager for HS 36
Subscriber Manager 36
Feature interactions 36
AML-based applications 36
Boss-Secretary filtering 36
Call Detail Recording (CDR) 37
CallPilot 37
Call redirection 37
Contact Center 37
Direct Incoming System Access (DISA) 37
Free Call Area Screening (FCAS) and Free Special Number Screening (FSNS) 37
IP Call Recording 37
Looping Prevention for Survivable SIP Media Gateway 37
LTER CONA 38
MobileX 38
Multiple Appearance DN (MADN) 38
Network Routing Service (NRS) 38
RLI limits for LOC and SPN configurations 38
Survival mode 38
Survivable SIP Media Gateway call routing limitations when the Primary Call Server is down 38
Survivable SIP Media Gateway configuration 39
Virtual Trunks 39

Copyright © 2010 Nortel Networks. All Rights Reserved.

ISDN features and services interworking interactions 39

High Scalability implementation recommendations 53

Sample Communication Server 1000E HS system 54
Zone Based Dialing and bandwidth management 55
ZBD numzone and bandwidth configuration for HS 55
Bandwidth zones 57
Dial plan configuration 58
Private number dialing for on-net calls 58
E.164 dialing for on-net calls 60
E.164 dialing for off-net calls 62
Call routing strategy 62
Network Routing Service configuration 62
Route calls between HA Call Server pair and SIP Media Gateway Controller 66
Network Routing Service route configuration 67
Network Routing Service collaboration 73
Call Server network configuration 74
Public number routing 78
DID trunk configuration for incoming PSTN calls 86
Alternate Call Routing 87
ACR for internumzone calls in the same HA group 88
ACR for internumzone calls in different HA groups 89
On-net to Off-net conversion for sites with multiple NPAs 90
Call flows for ACR 91
Secondary Call Server configuration for Geographic Redundancy 95
Node ID assignments for Signaling Server applications 96
Aligned Node ID assignment 96
Node ID assignment using Application Node ID 98
IP Phone redirection 99
Emergency Service Access configuration 99
NRS considerations for migration from multiple CS 1000E systems to a CS 1000E HS system 102
Route List Block configuration considerations for system expansion 105
Routing loop prevention for Survivable SIP Media Gateway 107

HS system configuration workflow 109

High Availability Call Server configuration 109
Configuration of the Survivable Servers 110
SIP Media Gateway Controller configuration 111
Network Routing Service configuration 112
External NRS configuration 112
Internal NRS configuration 113

Dial plan call flows 115

Private number calls between numzones in the same HA group 115

Copyright © 2010 Nortel Networks. All Rights Reserved.

On-net number calls between HA groups 116
On-net number calls from HA group to a Survivable SIP Media Gateway in a different HA group 116

Configuration Details 119
Numzone and bandwidth zone assignments 119
IP Phone DN assignment 120
CLID configuration 121
High Scalability Access Codes 121
NET_DATA AC1 and AC2 configuration 122
NRS routes 122
HS-A Internal NRS 122
HS-B Internal NRS 124
High Scalability system HS-A External NRS 125
High Scalability system HS-B External NRS 126
SPN configuration 127
SPN configuration for Off-net E.164 numbers 127
SPN configuration for HS-B 131
SPN Configuration for off-net E.164 numbers 131
LOC configuration 133
Distant Steering Code 138
Trunk Steering Code 139
ESA configuration 139
ZFDP ESDN configuration 139
ERL configuration 140
ESA Subnet configuration 141

Detailed call flows 143
Normal mode intranumzone calls 143
Normal mode internumzone using LOC dialing 144
Calls within an HA group 144
Calls between HA groups within an HS system 146
Normal mode internumzone using E.164 dialing 149
Calls within an HA group 149
TEHO: Originating station and preferred gateway are within an HA group 151
Tail End Hop Off: originating station and preferred gateway are in different HA groups within an HS system 156
Sourced based routing using gateway at originating station (no Tail End Hop Off) 159
Incoming calls from the PSTN 161
Normal mode calls to another HS system or a Communication Server 1000 system 162
Using LOC dialing 162
Using E.164 dialing 162

Copyright © 2010 Nortel Networks. All Rights Reserved.

Off-net (PSTN) calls: Tail End Hop Off using a gateway in another HS system 162
Survival mode 163
Intranumzone calls 164
Internumzone calls using LOC dialing 164
Internumzone calls using E.164 dialing 171
Unique data for each HA group 173
HA group A1 173
HA group A2 173
HA group B1 174

Survivable Media Gateway 175
Navigation 175
Assignment tables 175

Terminology 179

Copyright © 2010 Nortel Networks. All Rights Reserved.

Copyright © 2010 Nortel Networks. All Rights Reserved.

New in this release

The following sections detail what is new in the *Communication Server 1000E Planning and Engineering — High Scalability Solutions* (NN43041-221) for Nortel Communication Server 1000 Release 7.0.

- "Features" (page 9)
- "Other changes" (page 9)

Features

This is a new document.

Other changes

This section contains the following topic:

- "Revision history" (page 9)

Revision history

June 2010 Standard 01.01. This is a new document for Communication Server 1000 Release 7.0.

Copyright © 2010 Nortel Networks. All Rights Reserved.

Copyright © 2010 Nortel Networks. All Rights Reserved.

How to get help

This chapter explains how to get help for Nortel products and services.

Getting help from the Nortel Web site

The best way to get technical support for Nortel products is from the Nortel Technical Support Web site:

www.nortel.com/support

This site provides quick access to software, documentation, bulletins, and tools to address issues with Nortel products. From this site, you can:

- download software, documentation, and product bulletins
- search the Technical Support Web site and the Nortel Knowledge Base for answers to technical issues
- sign up for automatic notification of new software and documentation for Nortel equipment
- open and manage technical support cases

Getting help over the telephone from a Nortel Solutions Center

If you do not find the information you require on the Nortel Technical Support Web site, and you have a Nortel support contract, you can also get help over the telephone from a Nortel Solutions Center.

In North America, call 1-800-4NORTEL (1-800-466-7835).

Outside North America, go to the following Web site to obtain the telephone number for your region:

www.nortel.com/callus

Copyright © 2010 Nortel Networks. All Rights Reserved.

Getting help from a specialist by using an Express Routing Code

To access some Nortel Technical Solutions Centers, you can use an Express Routing Code (ERC) to quickly route your call to a specialist in your Nortel product or service. To locate the ERC for your product or service, go to:

www.nortel.com/erc

Getting help through a Nortel distributor or reseller

If you purchased a service contract for your Nortel product from a distributor or authorized reseller, contact the technical support staff for that distributor or reseller.

Copyright © 2010 Nortel Networks. All Rights Reserved.

Introduction

This document contains information about the components, features, and benefits of planning and engineering a high scalability solution. It provides an overview of the high scalability solution and provides detailed information and references about related management components and services. This document does not cover detailed configuration procedures. This document assumes a working knowledge of the Communication Server 1000 product, deployment models, and configurations.

Navigation

- “Overview” (page 17)
- “High Scalability implementation recommendations” (page 53)
- “HS system configuration workflow” (page 109)
- “Dial plan call flows” (page 115)
- “Configuration Details” (page 119)
- “Survivable Media Gateway” (page 175)

Conventions

In this document, the term *system* refers generically to the Nortel Communication Server 1000E.

In this document, the term *Server* refers generically to the following hardware platforms:

- Call Processor Pentium IV (CP PIV) card
- Common Processor Pentium Mobile (CP PM) card
- Common Processor Media Gateway (CP MG) card
- Common Processor Dual Core (CP DC) card
- Commercial off-the-shelf (COTS) servers

Copyright © 2010 Nortel Networks. All Rights Reserved.

— IBM x360m server (COTS1)

— HP DL320 G4 server (COTS1)

— IBM x3350 server (COTS2)

— Dell R300 server (COTS2)

In this document, the generic term COTS refers to all COTS servers. The term COTS1 or COTS2 refers to the specific servers as shown in the previous list.

In this document, the term *Gateway Controller* refers generically to the following cards:

- Media Gateway Controller (MGC) card (NTDW60 and NTDW98)
- Media Gateway Extended Peripheral Equipment Controller (MG XPEC) card (NTDW20)
- Common Processor Media Gateway (CP MG) card (NTDW56 and NTDW59)

Supported hardware platforms

As shown in the following table, the high-scalability solution supports the following hardware platforms.

Table 1
Hardware platform supported roles

Hardware platform	VxWorks server	Linux server	Co-res CS and SS	Gateway controller
CP PIV	yes (see Note 2.)	no	no	no
CP PM	yes	yes	yes	no
CP DC	no	yes	yes	no
CP MG	no	no (See Note 1.)	yes (See Note 1.)	yes (See Note 1.)
MGC	no	no	no	yes
MG XPEC	no	no	no	yes
COTS	no	yes	no	no
COTS2	no	yes	yes	no

Note 1: The CP MG card functions as the Co-res CS and SS, and the Gateway Controller while occupying slot 0 in a Media Gateway.

Note 2: HS supports the CP PIV for only the VxWorks Call Servers for HA groups.

Copyright © 2010 Nortel Networks. All Rights Reserved.

Document References

The following technical documents are referenced.

- *Dialing Plans Reference* (NN43001-283)
- *Communication Server 1000E High Scalability Installation and Commissioning* (NN43041-312)
- *Communication Server 1000E Planning and Engineering* (NN43041-220)
- *Software Input Output Reference — Maintenance* (NN43001-711)
- *Software Input Output Reference — Administration* (NN43001-611)

Copyright © 2010 Nortel Networks. All Rights Reserved.

Copyright © 2010 Nortel Networks. All Rights Reserved.

Overview

The chapter provides an overview of the high-scalability features.

Navigation

- “Introduction to High Scalability” (page 17)
- “System deployment models” (page 19)
- “General requirements” (page 22)
- “Management tools” (page 25)
- “System management reliability and redundancy” (page 28)
- “Security requirements” (page 29)
- “Scalability enhancements” (page 30)
- “General deployment considerations” (page 34)
- “Feature interactions” (page 36)

Introduction to High Scalability

The High Scalability (HS) system type provides you with a cost effective solution that meets your increasing scalability needs. The Communication Server 1000E HS architecture leverages Communication Server 1000E High Availability (HA) systems and Network Routing Service (NRS) to achieve high scale and seamless intrasystem calling. By deploying HS, you can easily combine up to six Communication Server 1000E HA systems in a single, centrally administered configuration. Use the system management application (Element Manager HS) as the single point administration tool to configure

Copyright © 2010 Nortel Networks. All Rights Reserved.

data for the HS system. Using Element Manager HS saves time and effort as you are no longer required to update individual HA systems. Some of the key benefits of Communication Server 1000E HS are:

- Leverage highly resilient and redundant Communication Server 1000E HA systems.
- Scales up to a combination of 150 000 IP endpoints and 36 000 TDM endpoints.
- Enables cost effective, simple, and centralized system management through the Element Manager HS.
- Element Manager HS automatically propagates common system data and unique user data to all HA systems in the HS solution.
- Seamless intrasystem calling through the NRS.

The following diagram illustrates the architecture of a high-scalability solution at a single data center.

Copyright © 2010 Nortel Networks. All Rights Reserved.

Figure 1
CS 1000E High Scalability architecture figure representing a single data center

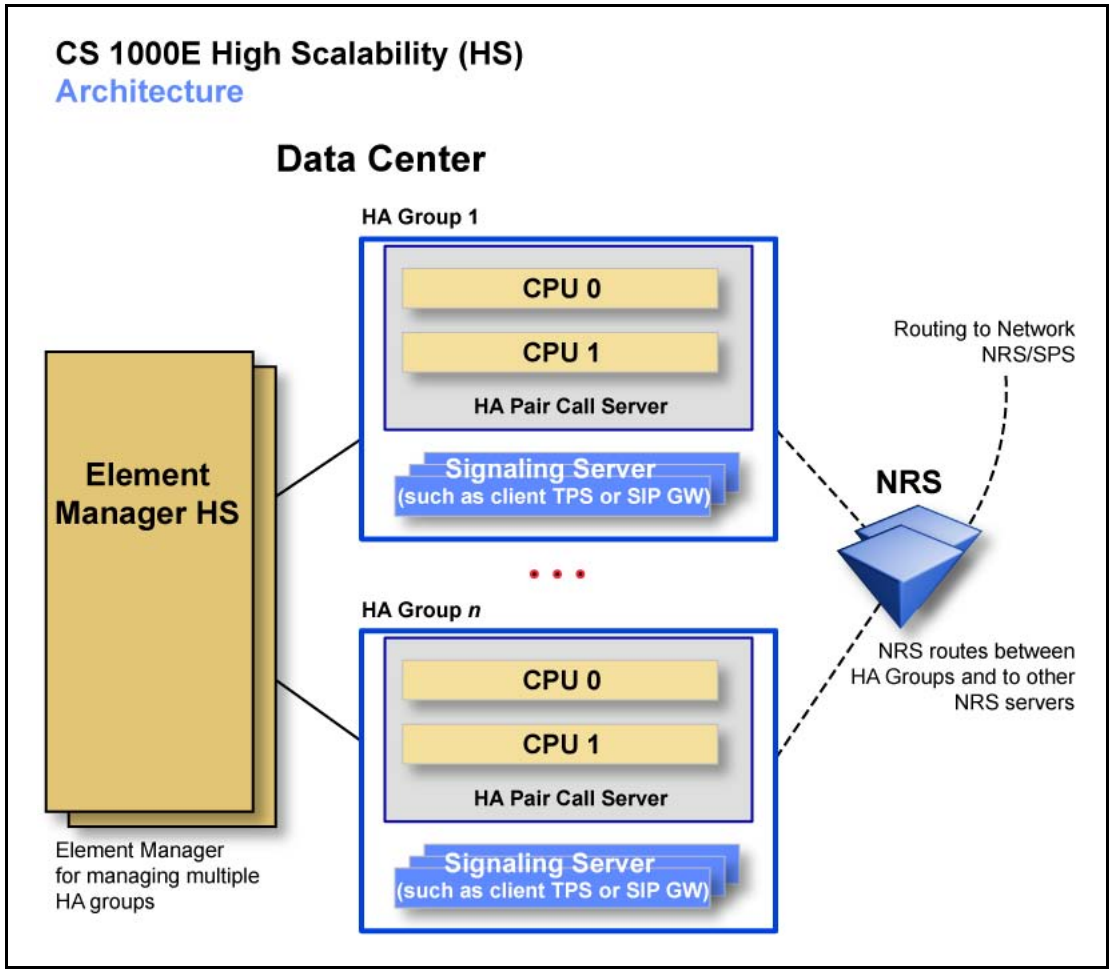

System deployment models

The following are three types of deployment models:

- “Campus Redundancy” (page 20)
- “Geographic Redundancy” (page 21)
- “Multiple HA groups dispersed geographically” (page 22)

Copyright © 2010 Nortel Networks. All Rights Reserved.

Campus Redundancy

The following figure illustrates the deployment of a Communication Server 1000 High Scalability system where Data Center 1 and Data Center 2 are configured as a High Availability (HA) group in a Campus Redundancy topology.

Figure 2
CS 1000E HS Campus Redundancy figure

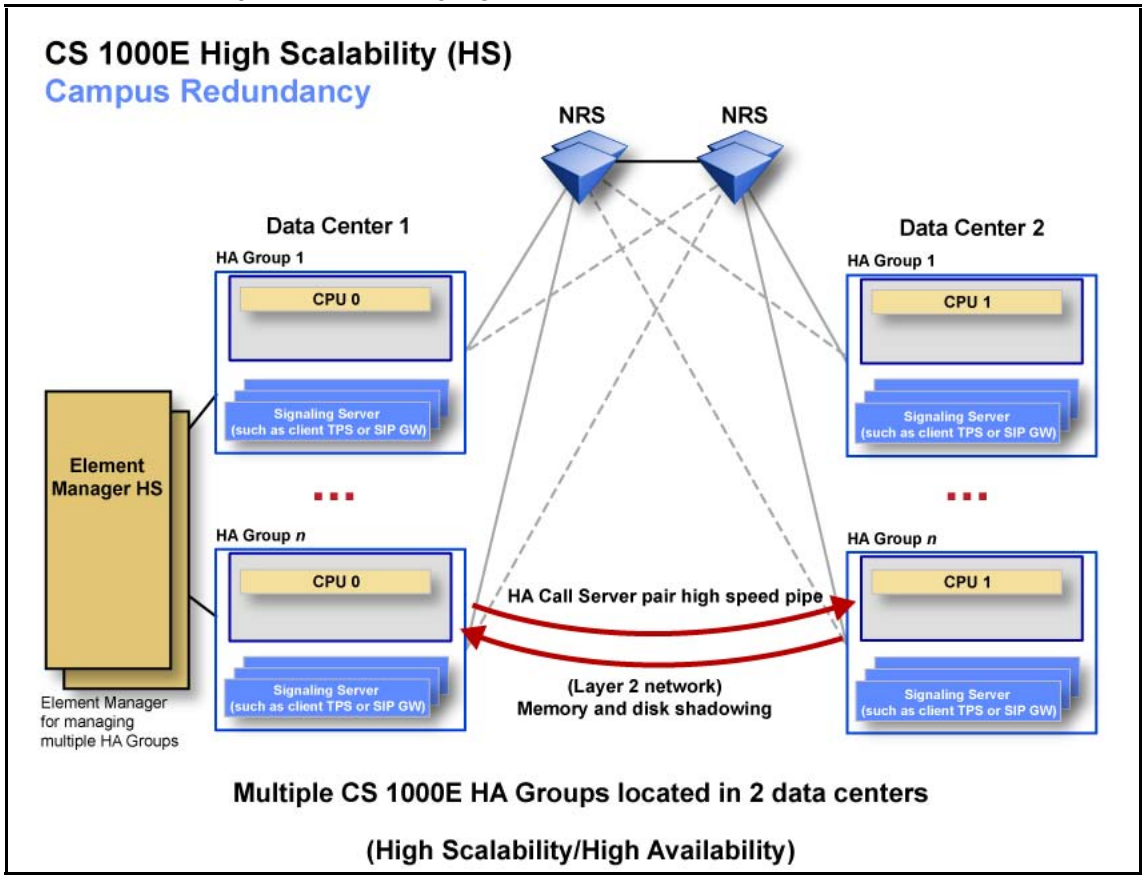

Copyright © 2010 Nortel Networks. All Rights Reserved.

Geographic Redundancy

The following figure illustrates the deployment of a Communication Server 1000 High Scalability system where Data Center 1 and Data Center 2 are configured as a High Availability group in a Geographic Redundancy (GR) topology.

Figure 3
CS 1000E HS Geographic Redundancy figure representing two HA groups in a GR topology

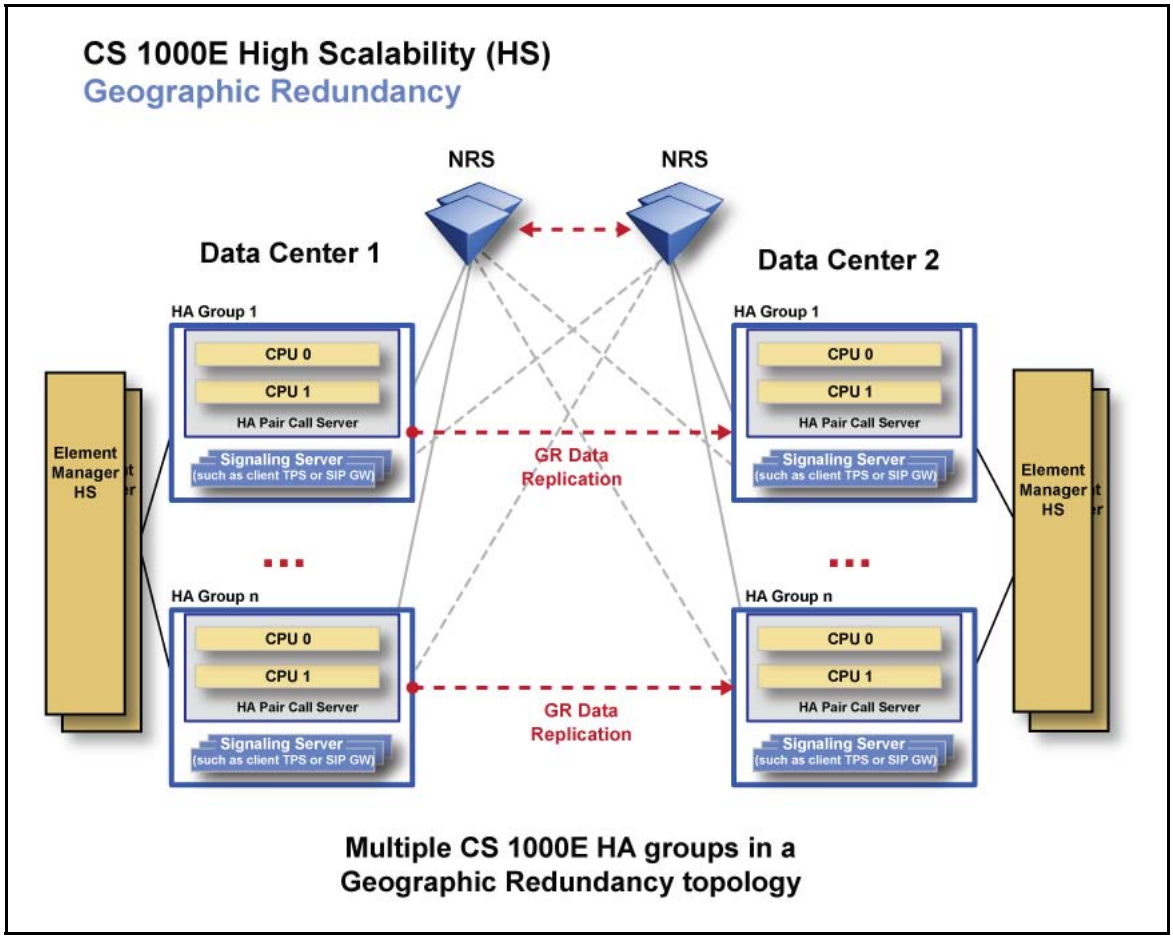

Copyright © 2010 Nortel Networks. All Rights Reserved.

Multiple HA groups dispersed geographically

The following figure illustrates the deployment of a Communication Server 1000 High Scalability system where multiple High Availability groups are in numerous locations in the network and centrally managed.

Figure 4
CS 1000E HS multiple HA systems dispersed geographically

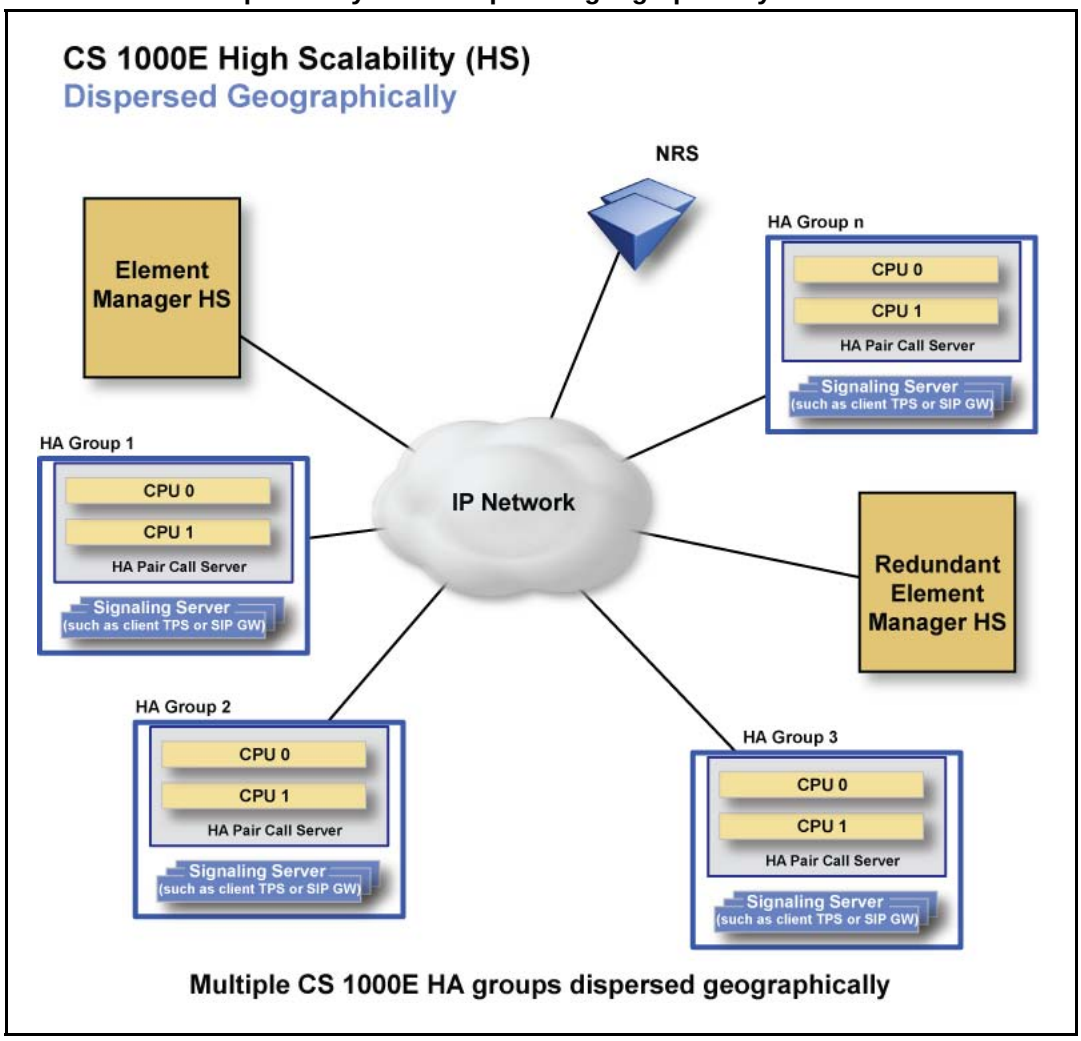

General requirements

This section provides the hardware and software requirements and the Communication Server 1000E package requirements for a Communication Server 1000E HS system.

Copyright © 2010 Nortel Networks. All Rights Reserved.

Key Communication Server 1000E package requirements

The following table shows the key Communication Server 1000E package requirements for the HA Call Server, Survivable Server, and SIP Media Gateway Controller in an HS system.

Table 2
Package requirements

Package	Mnemonic	Feature name	HA Call Server	Survivable Server (SMG or SSMG)	SIP Media Gateway Controller (SSMG)
404	GRPRIM	Geographic Redundancy Primary system	X	—	X
405	GRSEC	Geographic Redundancy Secondary system	—	X	—
406	SIP	SIP Gateway and Converged Desktop	X	X	X
410	HA	High Availability	X	X (see Note 1.)	—
420	ZBD	Zone Based Dialing	X	X	X
421	HIGH_SCALABILITY	High Scalability software package	X	—	—
Note 1: The HA package is optional for Survivable Server.					

Hardware and software requirements

The following table shows the recommended hardware for ensuring a high capacity performance for your Communication Server 1000E HS system and the software packages deployed.

Table 3
Recommended hardware and software requirements

Server name	Quantity	Platform	Software deployment	Description
UCM Primary Security Server	1	COTS1 or COTS2	None	Standalone UCM Primary Server
UCM Backup Security Server (optional)	1	COTS1 or COTS2	None	Standalone UCM Backup Server

Copyright © 2010 Nortel Networks. All Rights Reserved.

Server name	Quantity	Platform	Software deployment	Description
External NRS (Primary)	1	COTS2	NRS	Primary External NRS for E.164 routing
External NRS (Secondary, Optional)	1	COTS2	NRS	Secondary External NRS for E.164 routing
Internal NRS (Primary)	1	COTS2	NRS	Primary Internal NRS for private number routing
Internal NRS (Secondary, Optional)	1	COTS2	NRS	Secondary Internal NRS for private number routing
HA Call Servers (CPU 0 and CPU 1)	2 for each HA group	CP PM	CP PM VxWorks Call Server	HA Call Server pair
SIP Gateway Virtual Trunk for routing to External NRS	1 or more for each HA group	COTS2	SS (Signaling Server applications = Gateway)	SIP Gateway Virtual Trunk registered to the External NRS
SIP Gateway Virtual Trunk for routing to Internal NRS	1 or more for each HA group	COTS2	SS (Signaling Server applications = Gateway)	SIP Gateway Virtual Trunk registered to the Internal NRS
Line Terminal Proxy Server (LTPS)	1 or more for each HA group	COTS1 or COTS2	SS (Signaling Server applications = LTPS and H.323 Gateway)	LTPS for IP Phone. H.323 application is required for IP Phone redirection
Element Manager HS	1 or 2 for each HS system	COTS2	EM HS	Standalone or redundant Element Manager HS

Copyright © 2010 Nortel Networks. All Rights Reserved.

Server name	Quantity	Platform	Software deployment	Description
SSMG or SMG Survivable Server	1 for each SSMG or SMG site	CP PM or CP DC	CS + SS + EM (Signaling Server applications = LTPS, SIPGW, H.323 GW)	Survivable Call Server for SMG or SSMG. The H.323 Gateway application is required for IP Phone redirection.
SIP Media Gateway Controller + Media Gateway card for SSMG	1 for each SSMG site	CP MG	CS + SS + EM (Signaling Server applications = SIPGW	SIP Media Gateway Controller and Media Gateway card for SSMG

Management tools

The high-scalability solution offers enhanced management tools to provide central management capabilities for supporting multiple Communication Server 1000 groups. The enhanced tools reduce the administrative effort of common data and ensure new information or updates occur only once and propagate to all HA groups.

The following is a list of the High Scalability management capabilities:

- Deployment and installation of components including call server, Network Routing Servers (NRS)
- Unified Communications Management (UCM): Hierarchical tree for grouping elements under a Communication Server 1000 system
  - Manage Access control based on the hierarchical grouping of elements
  - Manage Deployment Manager, Patching Manager, and SNMP configuration using the hierarchical grouping of elements
- UCM: you can group elements by geographic location
- Subscriber Manager/Phone configuration
- Numbering plan and dial plan management: NRS and call server

Copyright © 2010 Nortel Networks. All Rights Reserved.

- Element Manager HS: propagates common and unique data to appear as a single entity from a management perspective
- Fault Management: features to manage faults, configuration, accounting, and performance measurement and security (FCAPS) are supported on individual servers

Unified Communications Management

The tree view shows a Communication Server 1000E HS system including all elements and expands to show the related HA groups (including the associated Call Server, Signaling Servers, Media Gateway Cards (MGC), and Media Cards). In addition to showing the related HA groups, the tree view can be used to group systems by geographic location to identify the geographic redundancy and HA relationships in a related HA group. For information about UCM navigation and access control, see "Unified Communication Manager navigation and access control" (page 29).

Element Manager

You can navigate the hierarchy of components in Element Manager using a single sign-on. You can efficiently and consistently access and manage various elements within the network. Element Manager centralizes and simplifies configuration of individual HA groups that constitute a Communication Server 1000E HS system.

Element Manager can:

- list individual HA groups that are part of the Communication Server 1000E HS system
- identify all the data that is considered common to the HS system and push the updates to the individual HA groups
- update data that is specific to an HA group by selecting the group from the list and performing the relevant operation

Deployment Manager

Use Deployment Manager to install all components (except VxWorks based Call Servers) for an HS system. Deployment Manager is installed on the Primary Security Server. Deployment Manager provides a simple and unified solution that enables network installation of Linux Base and applications. Deployment Manager is used to create the group view for HS and deploy the components. For more information about Deployment Manager, see *Linux Platform Base and Applications Installation and Commissioning* (NN43001-315).

Copyright © 2010 Nortel Networks. All Rights Reserved.

Subscriber Manager and phone provisioning

At the network security domain level, the Subscriber Manager application interacts with Element Manager for Communication Server 1000E HS systems and Element Manager for individual Communication Server 1000 systems.

The following figure illustrates the Subscriber Manager application and the interactions with Element Manager for CS 1000E HS systems and Element Manager for individual Communication Server 1000 systems.

Figure 5
Subscriber Manager

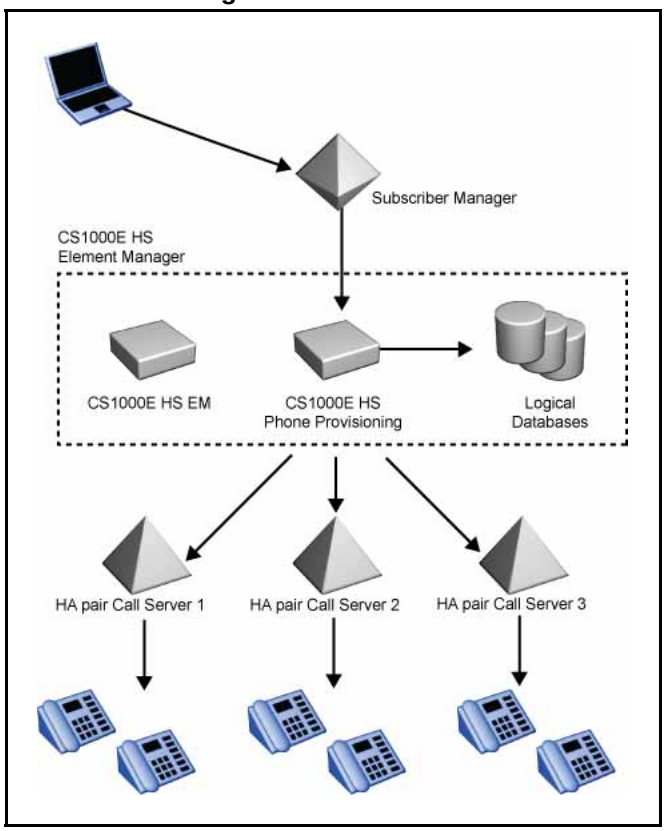

The phone provisioning component for a Communication Server 1000E HS Element Manager supports templates that you can use across multiple constituent HA groups. You do not have to explicitly export them from one group for importing to another.

Numbering Plans

A numbering group represents a common numbering plan. The numbering plan attributes (such as DN range, country code, area code, exchange code, private network identification, customer number, and Layer 0 (L0) domain name) are shared by a group of subscriber telephony accounts.

Copyright © 2010 Nortel Networks. All Rights Reserved.

You can define a numbering group to include numbering zones on the call server. The numbering groups also can automatically create and delete NRS entries that correspond to the number ranges that are entered.

System management reliability and redundancy

The model for system management reliability and redundancy for High Scalability provides a writable Primary security server and a read-only Backup security server. The Primary security server provides authentication/authorization, element registry lookup, user management, element registration, certificate management, IPsec management, SNMP configuration, centralized deployment, centralized patching, and subscriber manager functions for the Primary security server. The Backup security server performs element authentication and registration, if the Primary security server is unreachable.

In situations where both the Primary and Backup servers are unreachable, Element Manager, Deployment Manager, and Patch Manager can be started and used on a local system. Command Line Interface (CLI) access is also available.

ATTENTION
Patch Manager provides call server, Media Gateway Card (MGC), and Media Card patching; however, these capabilities are not available in local mode.

The following figure illustrates one-way database replication between the Primary and Backup security servers. Failure recovery time is minimized when a switchover occurs from one Element Manager HS to the other.

ATTENTION
For a Communication Server 1000E HS system, all administration occurs through the Element Manager HS. Use Element Manager to manage data that is specific to an individual call server and to manage data that is common to all call servers. Element Manager is not associated with a particular call server in an HS system but rather it is associated with all call servers within the HS system.

Copyright © 2010 Nortel Networks. All Rights Reserved.

Figure 6
Redundancy Model for Communication Server 1000E Element Manager HS

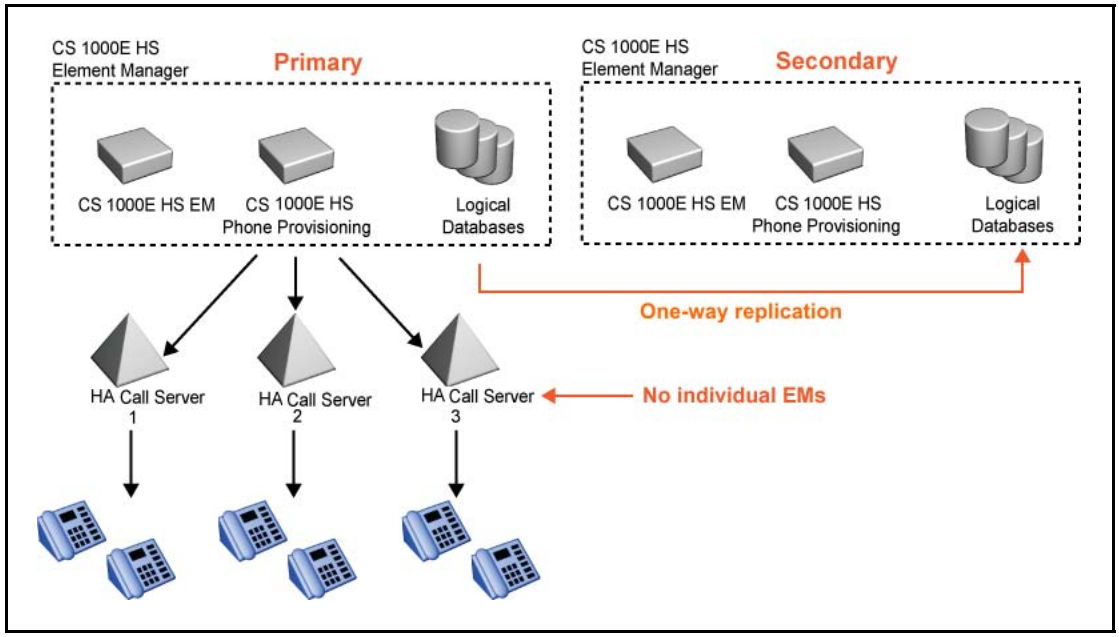

Security requirements

Unified Communication Manager navigation and access control

You can use Unified Communication Manager (UCM) to assign access control permissions to a single Communication Server 1000 system or to a High Scalability (HS) system as one entity to simplify administrative effort. You can manage common data for all systems that are part of the HS system so that new information or updates are done only once. You can also manage data that is specific to an individual HA group.

ISSS robustness and scalability

IPsec provides security at the ISSS level using either OPTI or FULL settings. The following enhancements are listed:

- Support for IPsec Dead Peer Detection (DPD) to improve detection time of loss of IPSec connectivity between peers and resulting packet loss in certain scenarios.
- Changing from exclusive use of 3DES encryption to using AES128 with a secondary choice of 3DES. This change increases performance during encryption/decryption of packets as well as higher security. 3DES continues to be available for compatibility with interfacing to other systems.

Copyright © 2010 Nortel Networks. All Rights Reserved.

- Performance of the platforms in loading IPsec policies following system restarts and after changing the ISSS levels provides higher scalability.
- Some IPsec policies are improved to remove overhead and improve security in certain situations.

ISSS management scalability

The number of elements in the UCM security domain has increased beyond 1000 for a Communication Server 1000E HS system. The following enhancement applies to limiting the scope for ISSS management:

- Reduction in the maximum time for data distribution by changing the scope of management for ISSS. Changes propagate to the affected elements to limit the scope to High Scalability (HS), Geographic Redundancy (GR), or individual Communication Server 1000 system or gateway.
- Limit the scope of manual ISSS targets to a single system (HS, GR, or individual Communication Server 1000 system or gateway).
- Manage ISSS levels and pre-shared keys at a HS, GR, or individual Communication Server 1000 system or gateway level rather than the entire security domain.
- Restrict management of ISSS settings for a system (HS, GR, or an individual Communication Server 1000 system or gateway) to users with privileges to manage ISSS on that system.

Scalability enhancements

Overall scalability has increased with the Communication Server 1000E High Scalability solution. The following sections describe the changes.

SMG scalability

The High Scalability solution supports a maximum configuration of 50 Survivable Media Gateways (SMG) for every Communication Server 1000 system. Changes include a reduced load on the call server when transferring database files from the call server. These changes reduce impacts on other call server applications during database transfers and increase the robustness of these transfers when you deploy a large number of SMGs.

UCM registration robustness and simplification

The following enhancements improve the robustness and operation of UCM registration:

- Automatic updates for distributing ISSS data for Communication Server 1000 elements when registering or unregistering from the UCM

Copyright © 2010 Nortel Networks. All Rights Reserved.

security domain. Other benefits include fewer manual steps and the involvement of multiple roles.

- Automatic provisioning of Media Gateway Controller and Media Cards to initialize with the call server prior to registration with UCM when ISSS is at OPTI or FULL levels. Manual steps during installation and replacement of Media Gateway Controllers and Media Cards are eliminated.
- Provide an automatic mode of registration to the UCM security domain for Media Gateway Controllers and Media Cards for systems not requiring the highest levels of security. Provisioned Media Gateway Controllers and Media Cards are automatically trusted and registered with the security domain when they contact the Call Server.
- Improvements to the internal operation of the UCM registration process for High Availability (HA) Call Servers, Media Cards and Media Gateway Controllers ensure a more optimal operation.

Element Manager

Element Manager is enhanced to improve the overall performance and scalability. There is a decrease in the response time and an increase in throughput of the interface.

Personal Directory scalability

The existing Personal Directory application has been enhanced to provide the scalability and robustness required for HS systems.

Network Routing Service

A tertiary Network Routing Service (NRS) server provides a third level of redundancy for the SIP Gateway (SIPGW) and compliments the existing Failsafe operations. This third level provides improved flexibility and ease of deployment for an HS solution. In a simple configuration, the IP address specified as the tertiary proxy can be the node IP address of the peer SIP entity, for example, the Survivable Call Server can be configured to point to the node IP of the SIP Media Gateway and vice versa. This configuration does not require the provisioning and maintenance that is normally required for an NRS application. However, if the tertiary IP address is the address of a server running an NRS, then that NRS needs to be configured with all the routing entries that are needed for routing calls between the Secondary Call Server and the SIP Media Gateway in a WAN outage scenario. The tertiary NRS provides additional flexibility because it has an independent NRS database that is tailored to route SIP calls during a WAN outage scenario. For more information about the Tertiary NRS server, *Network Routing Service Fundamentals* (NN43001-130).

Copyright © 2010 Nortel Networks. All Rights Reserved.

SIP Trunk and SIP Line

Enhancements to increase the SIP Trunk and SIP Line application for the number of supported ports from 1 800 to 4 000 for each Signaling Server and support for 8 000 telephones on a single server (with some blocking).

IP Line

Enhancements to increase the registration time of IP phones has been made.

Call Server scalability

Enhancements to increase the capacity of a single call server to 40 000 telephones. With this increase, almost all customer sites are supported on a single call server thus avoiding potential issues with feature transparency when users are on different call servers. Modifications to the Incremental Software Management (ISM) tools provide licensing for increased capacities. You can move user licenses between call servers of a HS system without the inconvenience and risk of major disruption caused by reloading the system.

High Scalability system Signaling Server requirements

A High Scalability (HS) system is a collection of CS 1000E High Availability (HA) Call Servers and Signaling Servers.

Each HS system requires:

- A minimum of one dedicated COTS2 server running NRS for handling PSTN and interoperability connections. NRS must be configured for SIP Proxy mode. Deploying an additional internode NRS for management purposes is recommended.
- A minimum of one dedicated COTS2 server for HS system management.

For information about the Signaling Server algorithm calculation values for determining the unique HS Signaling Server requirements, see *Communication Server 1000E Planning and Engineering* (NN43041-220).

General configuration requirements

This section describes the general configuration requirements for a Communication Server 1000E High Scalability system.

Bandwidth zones

Each survivable site is assigned a bandwidth zone. Bandwidth calculations are done at the HA Call Servers. A call destined to a Survivable SIP Media Gateway must be routed through the HA Call Server for the bandwidth usage to be accounted for properly.

Copyright © 2010 Nortel Networks. All Rights Reserved.

Survivable SIP Media Gateway

The Survivable SIP Media Gateway (Survivable SIP Media GW) is an architectural model for managing resources at individual locations in a Call Sever Geographic Redundancy (GR) model. A Survivable SIP Media Gateway consists of a SIP Media Gateway Controller and a Survivable Server. This architecture separates the IP resources from the traditional digital resources by having two separate call servers.

- One call server (and the associated signaling proxies), known as the Survivable Server, handles the survival aspect of GR which includes receiving the database from the Primary Call Server, providing registration and access services to IP endpoints, for example, IP Phones.
- The second call server (and the associated signaling proxies), known as the SIP Media Gateway Controller, handles all the digital resources at the site, such as traditional TDM and analog phones, fax machines, and PRI/BRI trunk connectivity.

The Media Gateway Controller card and the associated DSPs register to the SIP Media Gateway Controller. The SIP Media Gateway Controller connects the system to the digital resources through the SIP signaling interface.

The Survivable SIP Media Gateway architecture is intended to remove the 80 ms Round Trip Delay (RTD) restriction imposed on the GR network because the Media Gateway Controller in the Media Gateway now registers to the local SIP Media Gateway Controller and no longer has to traverse the network to register to the Primary Call Server. TN space is also freed up on the Primary Call Server because the data on the SIP Media Gateway Controller (virtual loops and TNs for the Media Gateway Controller resources and the associated digital/analog line devices) does not need to be configured on the Primary Call Server. This allows the Primary Call Server to support up to 511 survivable branches equipped with Survivable SIP Media Gateway.

The SIP Gateway portion of the Survivable SIP Media Gateway provides additional backup to the MAS servers in the network for ringback tone generation in the case of a WAN outage.

The following figure shows the Survivable Media Gateway and SIP Survivable Media Gateway evolution for Release 7.0.

Copyright © 2010 Nortel Networks. All Rights Reserved.

Figure 7
Survivable SIP Media Gateway evolution

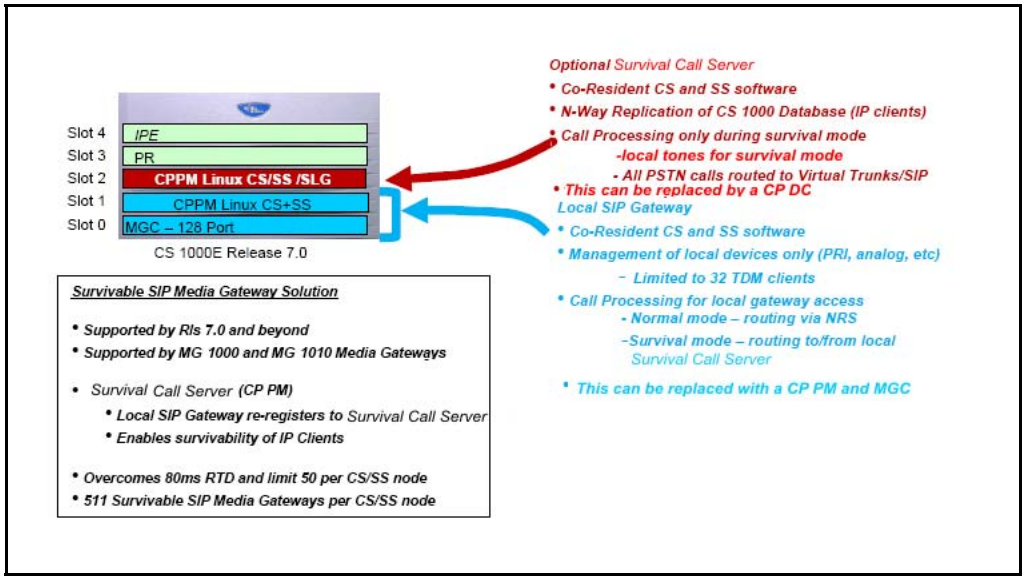

Survivable Media Gateway and Survivable SIP Media Gateway

A Survivable SIP Media Gateway is similar to the traditional Survivable Media Gateway (SMG) for which the Survivable Call Server receives the database from the Primary Call Server and all IP Phones are redirected to the Primary Call Server during normal operations. However, unlike the SMG, an additional blade called a SIP Media Gateway Controller is used in the Survivable SIP Media Gateway. The Media Gateway Card is always registered to the SIP Media Gateway Controller in normal and survival modes. All TDM devices, such as telephones and trunks, are configured on the SIP Media Gateway Controller. As shown in the Figure 8 "Sample HS system configuration" (page 54) diagram, the Belleville, Ottawa, Toronto, and Galway sites are Survivable SIP Media Gateway systems and the Boston, Richardson, and Belgium sites are SMGs.

General deployment considerations

This section describes general deployment considerations when migrating two or more Communication Server 1000E systems to a Communication Server High Scalability (HS) system. For more information about High Scalability installation and commissioning, see *Communication Server 1000E High Scalability Installation and Commissioning* (NN43041-312).

Planning

The following provides some considerations to the planning process.

1. Map the existing dial plan into the new centralized Zone Based Dialing plan.

Copyright © 2010 Nortel Networks. All Rights Reserved.

— How does the dial plan from your existing system fit into the overall ZBD dial plan?

— How many zones would be used to represent this system?

— What changes are needed for the Directory Numbers (DN)?

— What changes are needed for the Network Routing Service (NRS)?

2. Determine the hardware migration strategy.

   — Are you keeping the Media Gateway Controller in the new architecture?

   — Are you evolving all Media Gateway Controllers to SIP Gateways?

   — Are you replacing TDM phones to Unistim/SIP phones?

3. Determine the controlling HA group.

   — Have you determined which particular HA group of the Communication Server 1000E HS system that this system should be migrated to?

4. Determine the TN mapping.

   — How are the TNs of the existing phones and other hardware such as Media Gateway Controllers and cards, mapped to the new TN space of the Communication Server 1000E HS system?

5. Print out existing data before migration.

   — If possible, print existing data (for example, CFN, CDB, RDB, ESN, trunk data blocks) and keep for future reference.

Zone Based Dialing

Zone Based Dialing (ZBD) is a critical feature for your Communication Server 1000E deployment. Numbering Zone (numzone) mapping and configuration must be considered. Dial Plan analysis and ZBD design is the first step in the migration planning process. For a description of numbering zones, see *Dialing Plans Reference* (NN43001-283).

Media Gateway Controller migration

The following must be considered:

- How many Media Gateways do you have in your existing system?
- How many of your existing Media Gateways are survivable?
- Would your underlying network support Media Gateway Controllers from a central Call Server?

  Network parameters such as Round Trip Delay (RTD) (<85ms) and % packet loss (<0.1%) must be considered. If the network limits such support, then consider deploying SIP Media Gateways for the Branch/Regional locations.

Copyright © 2010 Nortel Networks. All Rights Reserved.

Total capacity

The total capacity of all your existing Communication Server 1000 systems must be considered. This determines the number of HA groups needed in the HS system.

Physical configuration

The physical configuration of the HS system must be considered.

- Will all the High Availability (HA) groups be collocated in one Data Center?

  OR

  Will all the HA groups be separated into two Data Centers with Campus Redundancy configuration?

- Are the HA groups geographically dispersed?

Large network deployment

For large network deployment, it is recommended that the UCM Primary security server and the UCM backup security server run on dedicated servers with no other applications co-residing on the same server. In particular, the Element Manager application should not run on the same server as the UCM Primary or Backup server. This is because the UCM Servers must be the first elements to upgrade. If Element Manager co-resides with UCM, it is upgraded as well and cannot be used to manage the Call Server which has yet to be upgraded.

Element Manager for HS

Element Manager for the HS system must be deployed on a standalone Linux Server. The Redundant Element Manager HS, if deployed, must be deployed on the same hardware type of Linux Server as the primary Element Manager HS.

Subscriber Manager

Subscriber Manager is a mandatory component for the Communication Server 1000E HS system.

Feature interactions

The following are the feature interactions for the Communication Server 1000E High Scalability (HS) system.

AML-based applications

AML-based applications, such as Contact Center or CallPilot, require a separate instance for each HA group Call Server.

Boss-Secretary filtering

Boss and secretary phones must be equipped on the same HA group.

Copyright © 2010 Nortel Networks. All Rights Reserved.

Call Detail Recording (CDR)

Call Detail Recording (CDR) records are produced separately for each HA group Call Server and must be consolidated in the downstream processing of a billing system.

CallPilot

CallPilot implementations operate within individual CS 1000 HA groups and are similar to previous releases. Each CS 1000 HA group supports CallPilot implementations and uses the MCDN networking features to route calls between HA groups. Each CS 1000 HA group supports central messaging services (Network Messaging Service) for users throughout the network.

Call redirection

Survivable SIP Media Gateway cannot redirect to a number on the SIP network.

Contact Center

Contact Center implementations operate within individual CS 1000 HA groups and is similar to configurations in previous releases. Each CS 1000 HA group supports Contact Center implementations and uses the MCDN networking features to route calls between HA groups.

Direct Incoming System Access (DISA)

DISA is not supported on a Survivable SIP Media Gateway while it is in the survival mode operation.

Free Call Area Screening (FCAS) and Free Special Number Screening (FSNS)

For an HS system, there is a maximum of 255 FCAS tables to be applied to all the Media Gateways.

IP Call Recording

You must implement IP Call Recording within each CS 1000 HA group to support the users within that group.

Looping Prevention for Survivable SIP Media Gateway

All Calls originating from TDM devices at the Survivable SIP Media Gateway that are not locally terminated are routed to the HA Call Server using Vacant Number Routing (VNR). Because VNR is used, potential looping scenarios occur when a call is routed to the Survival SIP Media Gateway and cannot be locally terminated. In this case, the Survival SIP Media Gateway reroutes the call back using VNR to the internal NRS which tandems the call to the corresponding HS Call Server. To prevent this type of looping scenario, use trunk access restriction using TARG/TGAR to prevent an incoming trunk call to route back out on the same trunk route.

Copyright © 2010 Nortel Networks. All Rights Reserved.

LTER CONA

If a user misdials a number and the number happens to match the dial plan prefix, the call is routed to another HA group in the same manner as dialing a valid DN number in the HS system. As a result, the invalid number treatment, such as overflow tone or announcement, is not provided until all entries in the RLI are attempted.

MobileX

The MobileX mid-call features (including Ring Again) are not supported when the mobile call was made through a Survivable SIP Media Gateway. MobileX calls using PRIs on the Media Gateways or Survivable Media Gateways of the HA group controlling the MobileX user support the mid-call features. Calls that flow through the SIP trunks using the SIP Trunk Bridge also support the mid-call features.

Multiple Appearance DN (MADN)

Multiple Appearance Dialed Number (MADN) does not work across HA groups within the HS system.

Network Routing Service (NRS)

The Network Routing Service (NRS) application is used to route calls between call servers. Engineering guidelines and recommendations for capacity and configuration are included in the system documentation.

RLI limits for LOC and SPN configurations

The RLI can have up to 64 entries, therefore, there is a limit to the number of PRI routes that can be configured in the LOC entry and the number of preferred gateways that can be configured in the SPN entry. For more information, see “Route List Block configuration considerations for system expansion” (page 105) and Table 38 "RLB configuration for SPN entries" (page 107).

Survival mode

Not all ISDN features work across other Survivable SIP Media Gateways in survival mode. The proprietary information element (IE) does not get sent to another call server through the public network in survival mode. Therefore, only basic call features are supported across Survivable SIP Media Gateway in survival mode. Any call redirection related features are supported only within the same Survivable SIP Media Gateway.

Survivable SIP Media Gateway call routing limitations when the Primary Call Server is down

In a Geographic Redundancy (GR) system equipped with Survivable SIP Media Gateway, when the Primary Call Server is down, there are routing restrictions for calls involving the Survivable SIP Media Gateway. If the Survivable SIP Media Gateway still registers to the internal NRS, all gateway calls that require NRS routing will be routed to the Primary

Copyright © 2010 Nortel Networks. All Rights Reserved.

Call Server. However, the IP Phones located at that site are no longer registered to the Primary Call Server. Therefore, the following call scenarios do not terminate properly:

- TDM phones at the Survivable SIP Media Gateway calling IP Phones at the same site
- TDM phones at the Survivable SIP Media Gateway calling IP Phones at another site using LOC dialing

  E.164 dialing works in this call flow
- Incoming call from PSTN at the Survivable SIP Media Gateway to IP Phones at the same site

The limitations above only apply to situations when the Primary Call Server is down and the Survivable SIP Media Gateway still registers to the internal NRS. These limitations do not apply in the WAN outage situation where the Survivable SIP Media Gateway cannot register to the internal NRS. In this situation, calls from the SIP Media Gateway Controller route directly to the Survivable Server.

Survivable SIP Media Gateway configuration

For the TDM devices at the Survivable SIP Media Gateway to correctly terminate locally to the Survivable SIP Media Gateway in survival mode, the VPNI, bandwidth zone, and numzone of the TDM users must match those of the IP users on the Primary Call Server in survival mode.

Virtual Trunks

Virtual Trunks (SIP) are used in call processing of calls between call servers.

ISDN features and services interworking interactions

The following table provides a high level view of the interworking interactions.

Legend:

- Yes = partially supported with description of limitation
- N/A = Not Applicable
- No = no interworking limitation

Table 4
ISDN features and services interworking interactions table

ISDN Features and Services	Interworking interaction	Comments
1.5/2.0 Megabits per second Gateway	N/A	—
1+ Dialing	N/A	—

Copyright © 2010 Nortel Networks. All Rights Reserved.

ISDN Features and Services	Interworking interaction	Comments
510 Trunk Route Member Expansion	N/A	—
Adaptive Bandwidth Management Data	Yes	Supported on an individual HA group basis
Advice of Change	Yes	Charging information is supported on an individual HA group basis
Analog Private Network Signaling System (APNSS)	N/A	—
Analog semi permanent connections	No	—
Attendant and Network Wide Remote Call Forward	Yes	- LD 57 (FFC for FFCT and RCFA) is required for phone based Remote call forward and it is not common data for HS system. - Feature operated on a individual call server basis.
Attendant Blocking of Directory Number	No	—
Attendant Through Dialing Network wide	No	—
Australia ETSI ISDN Primary Rate Interface Fundamentals	No	—
Backup D-Channel	No	—
Basic Call Service	No	—
B-Channel Overload Control	No	—
Break-in Features - Break-in busy indication and prevention - Break-in with secrecy	Yes	Not sure the attendant console can use the break-in features across an High Scalability (HS) system.
BRI/PRI Basic Call Interworking	No	—
BRI trunks with Night Service Enhancement	Yes	- Operated on an individual HA group basis
Business Networking Express/EuroISDN Call Diversion Business Networking Express/Euro ISDN Explicit Call Transfer	Yes	- BNE is a VPN solution and is operated on an individual HA group basis - LD 27 – Not common data on an HS system

Copyright © 2010 Nortel Networks. All Rights Reserved.

ISDN Features and Services	Interworking interaction	Comments
Business Networking Express/Name and Private Number Display	Yes	- BNE is a VPN solution and is operated on an individual HA group basis - LD 27 – Not common data on an HS system
Call Change Keeping	Yes	- require PPM - operated on an individual HA group basis
Call Connection Restriction	No	—
Call Diversion Notification	Yes	Operated on an individual HA group basis
Call Forward All Calls/No Answer	Yes	Call Forward DN need to be entered by the user in seven-digit DN format (with numzone prefix in the beginning of CFW DN.). Call Forward All Calls/No Answer is not supported across another SSMG in survival mode.
Call Forward, Break-In and Hunt internal or External Network Wide	Yes	Hunt is not supported by ZBD. It might not work on an HS system
Call Forward/Hunt Override Via Flexible Feature Code	Yes	Hunt and FDN is a limitation from ZBD, therefore, it won't work for LTER CONA on HS system
Call page Network Wide	Yes	Must equip with NAS on all HA groups.
Call park Network Wide	Yes	A call in a parked state on a System Park Directory Number (DN) or station phone park DN could only be retrieved by an attendant console or a station phone located within the same node. LD 50 (Call Park Data) is not common data on an HS system
Call Pickup Network Wide (PAGENET)	Yes	Users must be linked to the same Call Pickup group regardless of network location. LD 15 - (PINX) DN is required on each HA group in the network. LD 57 (FFC) is not common data on an HS system.

Copyright © 2010 Nortel Networks. All Rights Reserved.

ISDN Features and Services	Interworking interaction	Comments
Call Center Transfer Connect (UUI)	Yes	Feature operated on an individual HA group basis. LD 23 – Control DN is not common data on an HS system.
Calling Line Identification (CLID) in CDR	Yes	Information is connected on an individual HA group basis.
Calling Party Privacy (CPP)	Yes	LD 57 (FFC) is not common data on an HS system. Administrator need to configure the same Calling Party Privacy Code (CPP) FFC on each HA group to support the feature.
Calling Party Privacy Override (CPPO)	Yes	LD 57 (FFC) is not common data on an HS system. Administrator need to configure the same Calling Party Privacy Override (CPPO) FFC on each HA group to support the feature.
Calling Party Privacy Override Enhancement	Yes	LD 57 (FFC) is not common data on an HS system. Administrator need to configure the same Calling Party Privacy Override (CPPO) FFC on each HA group to support the feature.
Channel Negotiation	No	—
CLID-C Enhance Override CLID Presentation Restriction (CLIP/CLIR)	No	—
CLID on Analog Trunks for Hong Kong (A-CLID)	No	—
CLID Redirecting Number Enhancement	Yes	Redirection to voice mail might not work across an HS system LD 23 (Enable redirection to SCCS CDN or agent mailbox) is not common data on an HS system. Administrator need to configure redirection data on each HA group in an HS system.
DID-to-network Calling	No	—

Copyright © 2010 Nortel Networks. All Rights Reserved.

ISDN Features and Services	Interworking interaction	Comments
Digit Key Signaling at Console	Yes	It will not work across an HS system.
Digital Trunk Interface and Primary Rate Interface Time Slot Reuse.	No	—
Display of Access Prefix on CLID	No	—
Display of Calling Party Denied	No	—
DPNSS1/DASS2 to Q.931 Gateway	No	—
DPNSS1 Route Optimization/MCDN Trunk Anti-Tromboning Interworking	No	—
E.164/ESN Numbering Plan Expansion	No	—
Electronic Lock Network Wide/Electronic Lock on Private Lines	Yes	LD 15 – Station Control Password (SCPW) length must be defined the same for all HA groups across an HS system. Must meet the format of CDP or UDP dialing plan. LD 57 (FFC for ELKA) is not common data in an HS system. Administrator need to configure the same ELKA FFC code on each HA group of an HS system.
Equi-distribution Routing Network Attendant Service (NAS)	Yes	It will not work across HS system.
Error Handling on ISDN Signaling Link Analog E & M TIE Trunks	No	—
EuroISDN 7kHz/ Videotelephoney Teleservices	Yes	This feature is not supported over QSIG, DPNSS1, or MCDN networks. It will not work across an HS system.
EuroISDN Continuation	No	—
EuroISDN Continuation Phase II	No	—

Copyright © 2010 Nortel Networks. All Rights Reserved.

ISDN Features and Services	Interworking interaction	Comments
EuroISDN Malicious Call Identification (MCID)	Yes	MCT traces are printed on the maintenance TTY of the corresponding HA group. They are not centrally collected. LD 57 (FFC for MTRC) is not common data in an HS system. Administrator need to configure the same MTRC FFC on each HA group across an HS system.
EuroISDN Trunk – Network Side	No	—
Idle Extension Notification	Yes	—
Incoming Trunk Programmable Calling Line Identification (CLID)	No	—
Integrated Service Access (ISA)	Yes	ISA allows multiple service routes to share the same common pool of B-channels. It will not work across an HS system
Integrated Trunk Access (ITA)	Yes	Integrated Trunk Access (ITA) allows common digital transmission facilities (such as a T1 link) to be shared by: • B-channel trunks (ISL/PRI) • Traditional A & B bit signaling trunks. It will not work across an HS system
ISDN Basic Rate Interface Connected Line Presentation/Restriction (COLP/COLR)	No	—
ISDN BRI Calling Line Identification and Presentation (CLIP)	No	—
ISDN BRI ETSI Call Forwarding Unconditional CFU)	Yes	Configuration of ETSI protocol for DSL and ISDN BRI Terminal is done on an individual HA group basis in Overlay 27. It will not work across an HS system

Copyright © 2010 Nortel Networks. All Rights Reserved.

ISDN Features and Services	Interworking interaction	Comments
ISDN BRI ETSI Conference	Yes	Configure the warning tone and conference in Terminal Service Profile is defined on an individual HA group basis in LD 27
ISDN BRI National ISDN-1 Call Forward All calls	Yes	Configure Call Forward All calls in Terminal Service Profile is defined on an individual HA group basis in LD 27.
ISDN BRI National ISDN-1 Conference	Yes	Configure the warning tone and conference in Terminal Service Profile is defined on an individual HA group basis in LD 27
ISDN BRI Special Call Forward Busy	Yes	Configure of Call Forward busy enabled in Terminal Service Profile is defined on an individual HA group basis in LD 27
ISDN BRI Special Hunting	Yes	Cannot hunt across multiple Call Servers on an HS system
ISDN Calling Line Identification and Presentation	No	—
ISDN Calling Line Identification Enhancements	No	—
ISDN PRI Central Office Connectivity	No	—
ISDN QSIG	No	—
ISDN QSIG Alternate Routing	No	—
ISDN QSIG basic Call	No	—
ISDN QSIG Call Diversion Notification	Yes	LD 95 (CPND) is not common data in an HS system, Administrator needs to configure the CPND on each HA group across the HS system. CFB/CFNR/CFU will not work across an HS system.

Copyright © 2010 Nortel Networks. All Rights Reserved.

ISDN Features and Services	Interworking interaction	Comments
ISDN QSIG Call Diversion Notification Enhancements	Yes	LD 95 (CPND) is not common data in an HS system, Administrator needs to configure the CPND on each HA group across the HS system. CFB/CFNR/CFU will not work across an HS system.
ISDN QSIG Call Transfer Notification	Yes	LD 95 (CPND) is not common data in an HS system, Administrator needs to configure the CPND on each HA group across an HS system.
ISDN QSIG Channel ID Coding	No	—
ISDN QSIG Generic Functional Transport	No	—
ISDN QSIG Name Display	Yes	LD 57 (FFC for Calling Party Privacy (CPP)) and LD 95 (CPND) is not common data in an HS system. Administrator must configure the corresponding data on each HA group to support the feature across an HS system.
ISDN QSIG Name Display Enhancement	Yes	LD 57 (FFC for Calling Party Privacy (CPP)) and LD 95 (CPND) is not common data in an HS system. Administrator must configure the corresponding data on each HA group to support the feature across an HS system.
ISDN QSIG Path Replacement	No	—
ISDN QSIG/ETSI GF Enhancement	No	—
ISDN QSIG/EuroISDN Call Completion	Yes	LD 57 (FFC for Ring Again) is not common data in an HS system. Administrator need to configure the same Ring Again FFC code on each HA group across the HS system.

Copyright © 2010 Nortel Networks. All Rights Reserved.

ISDN Features and Services	Interworking interaction	Comments
ISDN QSIG/EuroISDN Call Completion Enhancement	Yes	LD 57 (FFC for Ring Again) is not common data in an HS system. Administrator needs to configure the same Ring Again FFC code on each HA group across the HS system.
ISDN QSIG-BC and QSIG-GF Compliance Update	No	—
ISDN Semi Permanent Connections for Australia	No	—
Japan D70 nB+D	No	—
Japan TTC common Channel Signaling	No	—
Malicious Call Trace Enhancement (MTRC)		LD 57 (FFC for MTRC) is not common data in an HS system. Administrator need to configure the same MTRC FFC on each HA group across an HS system. MTC traces are printed on the maintenance TTY of the corresponding HA group. They are not centrally collected.
MCDN Alternate Routing	Yes	—
MCDN End to End Transparency	No	—
Meridian Hospitality Voice Services	Yes	LD 23 (ACD for Attendant Overflow Position (AOP)) is not common data in an HS system. Feature might not work across an HS system.
Meridian Mail trunk Access Restriction	Yes	Meridian Mail must reside on the same HA group as the transferring/conferencing phone. It will not work across an HS system.
Message Waiting Indication Interworking with DMS	Yes	Configuration of HLOC is required on each HA group. It will not work across an HS system.
MSDL idle Code Selection	No	—
MSDL Port Overload Counter	No	—

Copyright © 2010 Nortel Networks. All Rights Reserved.

ISDN Features and Services	Interworking interaction	Comments
MSDL Status Enquiry Message Throttle	No	—
Multi-Site Mobility Networking	Yes	Not sure how to select the visit or local set for an HS system. The DECT user can not move between an HS system
National ISDN 2 TR-1268 Primary Rate Interface	No	—
Network ACD (NACD)	Yes	Require one home location code (HLOC) per HA group. It will not work across an HS system.
Network and Executive Distinctive Ringing	No	—
Network Application Protocol Link Enhancement	No	—
Network Attendant Service	Yes	Need to treat each core in the HS system as an individual switch. If the phone goes unanswered, the call recalls to the attendant at the Main switch. Not sure which HA group is considered as the Main switch on the HS system.
Network Break-in and Force Disconnect	No	
Network Call Party Name Display/Network Name Delivery	No	
Network Call Redirection	Yes	MADN will not work across an HS system.
Network Call Transfer	No	—
Network Call transfer and network Extended Calls	No	—
Network Drop Back Busy and Off-hook Queuing	No	—
Network Individual Do Not Disturb	Yes	DNDI RAN will not work across an HS system.

Copyright © 2010 Nortel Networks. All Rights Reserved.

ISDN Features and Services	Interworking interaction	Comments
Network Intercom (Hot Type D and Hot Type Enhancements)	Yes	LD 95 (CPND) is not common data in an HS system. Administrator needs to configure the same CPND across each HA group on an HS system.
Network Message Services	No	—
Network Metering CDR Enhancement	No	—
Network Music	No	—
Network Ring Again	No	—
Network Routing Service on Linux	No	—
Network Signaling on Virtual Network Services	No	—
Network Speed Call	No	—
Network Tenant Service	Ye	It will not work across an HS system.
Network Time Synchronization	Yes	If the HS system is chosen to function as the master switch in the network, then the user must choose a node in the HS system to act as the master switch, so that the rest of the node in the HS system is configured as slave switch and can request the time from the master switch.
Network traffic Measurements	No	—
Network-wide Listed Directory Number	No	—
Network Wide Redundancy	No	—
NI-1 BRI Compliance Enhancement	No	—
NI-2 B-channel Service Messaging	No	—
NI-2 Call By Call service Selection	No	—
NI-2 Name Display Supplementary Service	No	—
NI-2/QSIG Compliance Update	No	—

Copyright © 2010 Nortel Networks. All Rights Reserved.

ISDN Features and Services	Interworking interaction	Comments
NPI and TON in CDR	No	—
Overlap Signaling on ISDN Networks	No	—
Private to Public CLID Conversion	No	—
Process Notification for Networked Calls	No	—
Public Network Feature Invocation records	No	—
Public Switched Telephone Network (PSTN)	No	—
QSIG Message Waiting Indication Supplementary Service	No	—
Radio Paging Improvement	Yes	Administrator must configure the Network Attendant Services (NAS) across all HA groups in the HS system.
Radio Paging Product Improvement Continuation	Yes	LD 58 (Radio paging) is not common data in an HS system. Administrator must configure the same TRDN across all Call Servers in the HS system for automatic operation.
Recall with Priority during Night Service, Network Wide	No	—
Recorded Announcement for Calls Diverted to External trunks	No	—
Redirecting Name Display Enhancement for QSIG Call Rerouting	No	—
Reference Clock Switching	Yes	LD 73 (Define the Grade of Service timers for the DTI card) is not common data in an HS system. Administrator must configure the primary and secondary clock reference on the same HA group in the HS system. The feature is worked on an individual HA group basis.
Remote Virtual Queuing	No	—

Copyright © 2010 Nortel Networks. All Rights Reserved.

ISDN Features and Services	Interworking interaction	Comments
Ring Again No Answer	No	—
SDID Number as CLID for EuroISDN Trunks	Yes	LD 49 (Incoming Digit Conversion (IDC)) is not common data in an HS system. Administrator need to configure the IDC table on each HA group in the HS system.
Service Verification	No	—
Singapore ISDN Restart Message Enhancement	No	—
Software Defined Network Access	No	—
Software Release ID	No	—
Trunk Anti-Tromboning	No	—
Trunk Route Optimization	No	—
Trunk to Trunk Connection	Yes	Feature works on an individual HA group basis. Outgoing Trunk to Trunk Charging information is contained in CDR on an individual HA group basis.
UIPE D-Channel Monitoring Tool Enhancement	Yes	LD 14 (MON_DATA) is not common data. For phone-based monitoring, the TNs must be entered on each HA group in the HS system. The monitor output message is printed out to the TTY or log file that is associated with the HA group. The feature works on an individual HA group basis.
Uniform Dialing Plan	No	—

Copyright © 2010 Nortel Networks. All Rights Reserved.

ISDN Features and Services	Interworking interaction	Comments
Virtual Network Services Virtual Directory Number Expansion	Yes	LD 79 (VNS) is not common data in an HS system. Each HA group must be linked by a D-channel across the HS system. Administrator must configure the same VNS DNs (VDN) on each HA group across the HS system.
Zone Based Dialing (ZBD)	Yes	Hunt & FDN for E.164 numbers are not supported. Call Forward Waiting (CFW) DN needs to be entered by the administrator with numzone prefix in the beginning of the CFW DN.

Copyright © 2010 Nortel Networks. All Rights Reserved.

High Scalability implementation recommendations

This chapter contains the recommended approach for implementing a Communication Server 1000E High Scalability solution. This section contains the dial plan and configuration recommendations.

Navigation

- “Sample Communication Server 1000E HS system ” (page 54)
- “Zone Based Dialing and bandwidth management” (page 55)
- “Call routing strategy” (page 62)
- “Network Routing Service route configuration” (page 67)
- “Network Routing Service collaboration” (page 73)
- “Private number routing” (page 75)
- “E.164 dialing for on-net calls” (page 77)
- “Public number routing” (page 78)
- “DID trunk configuration for incoming PSTN calls” (page 86)
- “Alternate Call Routing” (page 87)
- “Node ID assignments for Signaling Server applications” (page 96)
- “IP Phone redirection” (page 99)
- “Emergency Service Access configuration” (page 99)
- “NRS considerations for migration from multiple CS 1000E systems to a CS 1000E HS system” (page 102)
- “Route List Block configuration considerations for system expansion” (page 105)
- “Routing loop prevention for Survivable SIP Media Gateway” (page 107)

Copyright © 2010 Nortel Networks. All Rights Reserved.

Sample Communication Server 1000E HS system

The following diagram depicts an example configuration of an HS system and is used in the examples throughout this chapter.

Figure 8
Sample HS system configuration

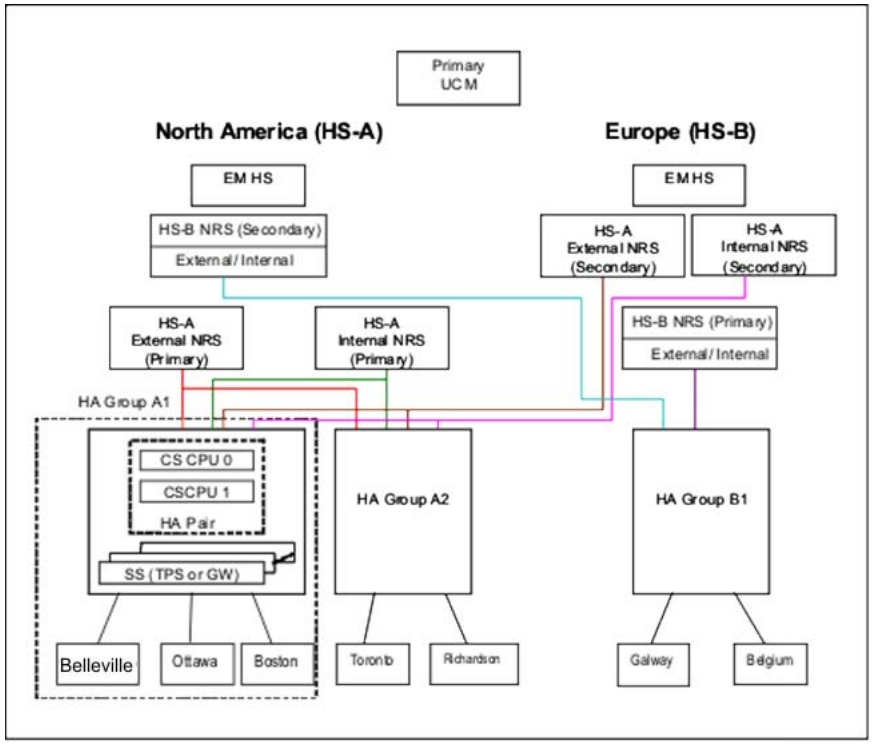

In the Figure 8 "Sample HS system configuration" (page 54), the following components are shown:

- Two High Scalability (HS) systems (Communication Server 1000E)
  - HS-A: North America
  - HS-B: Europe
- Two Network Routing Service (NRS) servers for network routing
  - HS-A: External NRS (Primary) and Internal NRS (Primary)
  - HS-B: External NRS (Secondary) and Internal NRS (Secondary)

  The External NRS routes E.164 numbers between the HA groups in an HS system and routes calls (E.164 and UDP) to and from systems outside HS. The Internal NRS routes private numbers (CDP and UDP) between HA groups and between an HA groups and the survivable sites or branches. The internal NRS redirects IP Phones from the survivable sites to the HA group. The two Secondary NRS servers are for NRS redundancy (optional).

Copyright © 2010 Nortel Networks. All Rights Reserved.

- HS-A has two groups: HA group A1 and HA group A2
- HS-B has one group: HA group B1
- HA group A1 has three survivable sites: Belleville (SSMG), Ottawa (SSMG), Boston (SMG).
- HA group A2 has two survivable sites: Toronto (SSMG) and Richardson (SMG)
- HA group B1 has two survivable sites: Galway (SSMG) and Belgium (SMG)

ATTENTION
For small deployments, you can combine the internal and external NRS into one server, as depicted in HS-B NRS in Figure 8 "Sample HS system configuration" (page 54).

For more information about NRS configuration, see “Network Routing Service domain” (page 65).

Zone Based Dialing and bandwidth management

For centralized deployment models, Zone Based Dialing (ZBD) can be used to effectively manage the dial plan for multiple locations. This section describes the recommendations for ZBD and bandwidth management.

ZBD configuration is common data for all HA groups. In the following example, every survivable site in the High Scalability (HS) system is assigned the following:

- a zone-based numzone
- a prefix associated with each numzone
  - All telephones in an HS system must be assigned to a numzone.
  - All telephones are configured as seven-digit DNs. The numzone prefix is the leading two to four digits of the seven-digit DN.
- a bandwidth zone

ZBD numzone and bandwidth configuration for HS

Referring to the Figure 8 "Sample HS system configuration" (page 54), the Belleville site is configured as numzone 343 with a prefix of 343. Phones at the Belleville site are configured with a 343xxxx seven-digit DN where xxxx is the four-digit local DN. For example, two IP Phones at the Belleville site can be configured (for HA group A1) as 3432000 (Phone A) and 3432001 (Phone B). The Ottawa site is configured as numzone 39 with a prefix of 39 with a five-digit local DN for the phone.

Copyright © 2010 Nortel Networks. All Rights Reserved.

The TDM devices at the SMG or the Survivable SIP Media Gateway must be assigned a numzone. For the Survivable SIP Media Gateway, the numzone must be configured at the SIP Media Gateway Controller and the numzone for the Survivable SIP Media Gateway must match the numzone configured at the HA Call Server for which the Survivable SIP Media Gateway belongs. For example, the Belleville SIP Media Gateway Controller is configured as numzone 343 with a prefix of 343 and all the TDM phones are configured with a 343xxxx seven-digit DN at the Belleville SIP Media Gateway Controller. For the SMG, no additional numzone configuration is required because all configuration is done at the HA Call Server. ZBD configuration are common data for all HA groups.

The following table contains the sample data of HS systems with numzones:

Table 5
ZBD numzone and bandwidth zone configuration table

Site	Numzone	Prefix	Bandwidth Zone (IP Phone and VGW)
Belleville	343	343	343
Ottawa	39	39	39
Boston	248	248	248
Toronto	333	333	333
Richardson	444	444	444
Galway	570	570	570
Belgium	574	574	574

ATTENTION
It is recommended that you assign ZBD numzone numbers, numzone prefixes, and bandwidth zones to the same number to simplify your configuration.

The following figure depicts an HA group and Survivable SIP Media Gateway numzone assignment.

Copyright © 2010 Nortel Networks. All Rights Reserved.

Figure 9
HA group and Survivable SIP Media Gateway numzone assignment

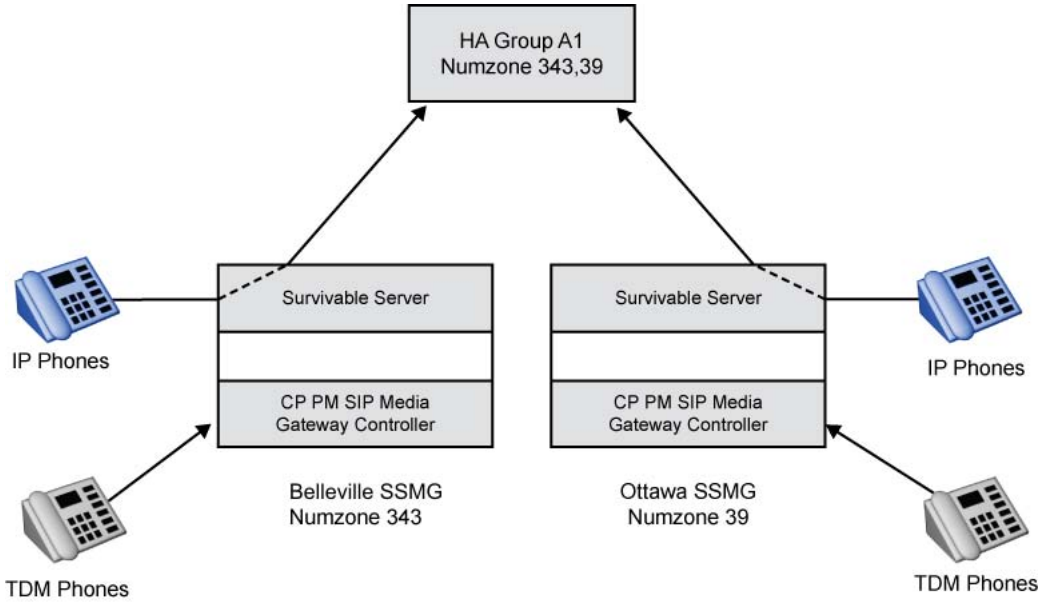

Bandwidth zones

Each survivable site is assigned a bandwidth zone. Bandwidth calculations are done at the HA groups. A call destined to a Survivable SIP Media Gateway must be routed through the HA Call Server for the bandwidth usage to be accounted for properly.

As a reference for the following example, see Figure 8 "Sample HS system configuration" (page 54). A user with an IP Phone at the Belleville site calls a user with a PSTN number that is routed through the Toronto Survivable SIP Media Gateway. The IP phone is registered to the HA Call Server A1 and therefore, the call is routed through HA group A1 to HA group A2. At HA group A2, the call is then routed to the Toronto Survivable SIP Media Gateway to ensure that the bandwidth used for all calls is accounted for in HA group A2.

ATTENTION
Intrazone and interzone bandwidth configuration are common data for all HA groups in an HS system.

Copyright © 2010 Nortel Networks. All Rights Reserved.

Dial plan configuration

There are two types of numbering plans configured, as shown in the following list.

- on-net numbers (within an HS system or external to HS)
- off-net E.164 numbers routed to the PSTN

Private number dialing for on-net calls

Private numbers are divided into two types:

- Intranumzone: calls within a numzone or survivable site
- Internumzone: calls between numzones
  - that are in the same HA group, for example, calls between Belleville and Ottawa sites
  - that are in different HA groups within an HS system, for example, calls between Belleville and Toronto sites
  - that are in different HS systems, for example, calls between Belleville and Galway sites
  - that are in an HS system to a private number outside the HS system

Intranumzone dialing

You do not have to dial the numzone prefix when calling within a numzone. In the figure, Figure 8 "Sample HS system configuration" (page 54), at the Belleville site, if a user with IP Phone A dials IP Phone B, only the four-digit extension is dialed, for example, 2001. The site prefix of 343 is not dialed.

For local dialing between TDM and IP Phones in an SMG or a Survivable SIP Media Gateway, you need not dial the numzone prefix, for example, IP Phone A (3432000) at the Belleville Survivable SIP Media Gateway can call TDM Phone C (3435005) at the Belleville Survivable SIP Media Gateway by dialing 5005.

At the Ottawa Survivable SIP Media Gateway, the numzone is configured as 39 with a site prefix of 39 at HA group A1. Therefore intranumzone calls (IP to IP, IP to TDM, TDM to IP, and TDM to TDM) use five-digit dialing because the numzone prefix for Ottawa is only two-digits.

Internumzone dialing between numzones

In this example, when dialing between numzones, the Zone Based Flexible Dialing Plan (ZFDP) table is used to match the digits dialed by the user when determining the call type. Use Element Manager to configure

Copyright © 2010 Nortel Networks. All Rights Reserved.

numbering zones. For a description of ZFDP, see *Dialing Plans Reference* (NN43001-283). Internumzone dialing uses a ZFDP table for every numzone. Numzone Access Codes are configured as Matching digits in the ZFDP tables. In ZBD, the dialed digits are matched and the call treatment is applied according to the Type configured in the ZFDP table for the corresponding matching digits.

The following is an example ZFDP table for the Belleville site (numzone 343).

Table 6
ZFDP table for Belleville site with numzone 343 (North American example)

Matching digits	Type	Description
6	LOC	UDP Location Code: inserts Access Code AC1/AC2
6011	INTL	International E.164: inserts Access Code AC1/AC2
61	NPA	North America Numbering Plan Area (NPA): inserts Access Code AC1/AC2 + ZCC
9	NPA	North America NPA: inserts AC1/AC2 + ZCC
911	ESDN	Emergency Service DN: inserts replacement string

The following is an example ZFDP table for the Galway site (numzone 570).

Table 7
ZFDP table for Galway site with numzone 570 (European example)

Matching digits	Type	Description
6	LOC	UDP Location Code: inserts Access Code AC1/AC2
9	REG2	Regional Level 2: inserts Access Code AC1/AC2 + ZCC + ZNPA
900	INTL	International E.164: inserts Access Code AC1/AC2
901	REG1	Regional Level 1: inserts Access Code AC1/AC2 + ZCC
999	ESDN	Emergency Service DN: inserts replacement string
112	ESDN	Emergency Service DN: inserts replacement string

For more information about configuring the System Access Codes (AC1 and AC2), see Table 15 "System Access Codes" (page 75).

For more information about ESDN and Emergency Service Access configuration, see “Emergency Service Access configuration” (page 99).

Copyright © 2010 Nortel Networks. All Rights Reserved.

In this example, private numbering plan is based on UDP dialing. For UDP dialing, the location code for the survivable site is the same as the numzone prefix. In North America, for example, a user with IP Phone (3432000) in Belleville calls IP Phone (3935000) in Ottawa by dialing 6-39-35000, where 6 is the Access Code/Matching Digit for LOC defined in the ZFDP table for the Belleville site, 39 is the Location code/numzone for Ottawa and 35000 is the local DN. In Europe, for example, a user with IP Phone (5707000) in Galway calls IP Phone (5746000) in Belgium by dialing 6-574-6000. Internumzone calls between HA groups and HS systems are completed in the same way. For example, if you are in Belleville and want to reach the IP Phone (3334000) in Toronto, you dial 6-333-4000 or if you want to reach IP Phone (5707000) in Galway, you dial 6-570-7000.

The same dialing procedure is also used for TDM phones at the SMG or Survivable SIP Media Gateway. For the Survivable SIP Media Gateway site, the same ZFDP table is configured on the SIP Media Gateway Controller and the HA Call Server pair to ensure the same Access Codes are used for calls originating from TDM phones at the Survivable SIP Media Gateway.

E.164 dialing for on-net calls

For E.164 dialing between numzones, you must dial an access code before you dial the E.164 number. For example, the Belleville site has the following three access codes:

- 61: configured as type Numbering Plan Area (NPA)
- 9: configured as type NPA
- 6011: configured as type International (INTL)

ATTENTION
E.164 dialing simplifies the user experience because the same access codes are used whether you call a private (on-net) number or go through the Public PSTN (off-net).

Use the 61 access code for dialing between numzones that are not in the same toll-free calling area. For example, a user with IP Phone (3432000) in Belleville dials a user with IP Phone (3935000) in Ottawa. The user dials 61-613-76-35000:

- 61 is the access code
- 613 is the NPA
- 76 is part of the NXX for DN 3935000

Copyright © 2010 Nortel Networks. All Rights Reserved.

ATTENTION
In the preceding example, the user dials 9-613-7635000 to reach the same DN; however, in the diagram, Figure 8 "Sample HS system configuration" (page 54), there is no toll-free calling between the Belleville and Ottawa sites. Using the 61 access code is more consistent for the user when dialing between numzones that are not in the same toll-free area. This is because the same 61 access code is used when dialing an off-net PSTN number that is in a different free calling area. Toll-charges do not apply when dialing on-net numbers because the call is routed internally through the VoIP network.

Use the 9 access code E.164 dialing for intranumzone calls and internumzone calls where the two numzones are in the same free calling area. In the diagram Figure 8 "Sample HS system configuration" (page 54), the Belleville site supports 10-digit dialing (NPA-NXX-xxxx) where access code 9 is configured as type NPA in the ZFDP table. For example, a user with an IP Phone (3432000) in Belleville calls a user with an IP Phone (3432001) also in Belleville. The user dials 2001 (local dialing) or the user can use E.164 dialing (user dials 9-613-961-2001):

- 9 is the access code
- 613 and 961 is the NPA and NXX for DN 3432001

In regions in North America that support seven-digit local dialing (NXXX-xxxx) and where there is an SMG or Survivable SIP Media Gateway, you must configure the access code in the ZFDP table as type NXX instead of NPA. The following table provides an example.

Table 8
ZFDP table for North America when seven digit dialing is supported

Matching Digits	Type	Description
9	NXX (see Note 1)	North America NXXX: insert AC1/AC2 + ZCC + ZNPA
Note 1: DAC must be set to 1 when configuring a numzone if NXX access codes are used in the numzone.		

Use the 6011 access code to dial to a numzone in a different country. For example, a user with IP Phone (3432000) in Belleville calls a user with IP Phone (5707000) in Galway. The user dials 6011-353-091-73 -7000:

- 6011 is the access code
- 353 is the country code for Galway
- 091 and 73 are the city/regional codes
- 7000 is the local DN

Copyright © 2010 Nortel Networks. All Rights Reserved.

E.164 dialing for off-net calls

For off-net calls, you must dial an access code before you dial the public or PSTN number. The same access codes are used in the ZFDP tables.

Dialing from North America

- a user in Belleville dials 9 + NPA + NXX + xxxx for calling a PSTN number in the same free calling area
- a user in Belleville dials 61 + NPA + NXX + xxxx to call a PSTN number in a different free calling area within North America

Dialing from Europe

- a user dials 9 + DN in Galway where the DN is a local PSTN number in the same area code as Galway
- a user dials 6011 + Country Code + Regional/City Code + DN to call a PSTN outside of North America
- a user dials 00 + area code + DN when calling a PSTN number in a different area code
- a user dials 000 + Country Code + area/regional/city code + DN for international calls

Call routing strategy

This section provides an example of the call routing strategy.

Network Routing Service configuration

Two Network Routing Service (NRS) servers are used for network routing—an internal NRS and external NRS. For small deployments, you can configure both the internal and the external NRS in the same server. The internal NRS is also the Network Connection Server for IP Phone redirection. The internal NRS is used to route Private numbers (CDP and UDP) within an HS system. The external NRS is used to route off-net E.164 numbers within an HS system and route E.164 and UDP calls to and from systems outside an HS system.

The following figure shows the internal and external NRS for HS-A.

Copyright © 2010 Nortel Networks. All Rights Reserved.

Figure 10
HS-A Internal and External NRS

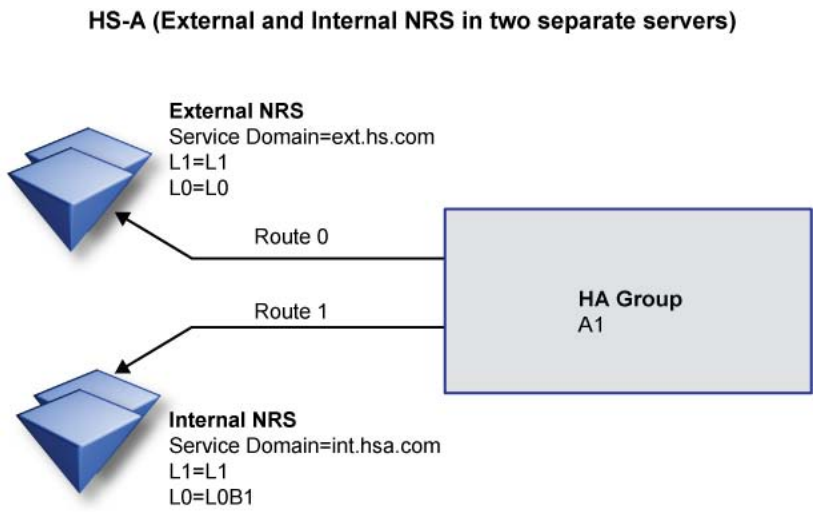

The following figure shows the internal and external NRS for HS-B.

Figure 11
HS-B Internal and External NRS

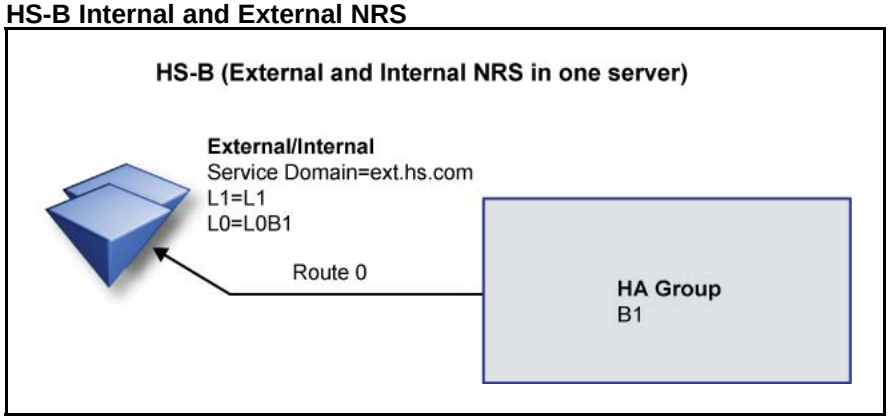

SIP Gateway configuration

Two SIP Signaling Gateways (SSG) are in each HA group—one routes to the external NRS and one routes to the internal NRS. At each Survivable SIP Media Gateway (Survivable SIP Media GW) site, there are two SIP Signaling Gateways—one in the Survivable Server and one in the SIP Media Gateway Controller. For each Survivable Media Gateway (SMG) site there is only one SIP Signaling Gateway which is in the Survivable Server.

Only one SIP Signaling Gateway is required when both the internal and external NRS are configured in one server. The following table shows an example of the SIP Signaling Gateway configuration.

Copyright © 2010 Nortel Networks. All Rights Reserved.

Table 9
SIP Signaling Gateway configuration

SIP Signaling Gateway	Primary TLAN IP	Secondary TLAN IP	Tertiary TLAN IP
HA group: SIP Signaling Gateway External	External NRS (Primary) See Note 1.	External NRS (Secondary) See Note 1.	N/A
HA group: SIP Signaling Gateway Internal	Internal NRS (Primary)	Internal NRS (Secondary)	N/A
SMG: Survivable Server	Internal NRS (Primary)	Internal NRS (Secondary)	N/A
SSMG: Survivable Server	Internal NRS (Primary)	Internal NRS (Secondary)	SIP Media Gateway Controller
SSMG: SIP Media Gateway Controller	Internal NRS (Primary)	Internal NRS (Secondary)	Survivable Server
Note 1: When the internal and external NRS are in the same server, the IP address used is the same as the TLAN IP address of the internal NRS.			

In the previous table, the HA group SIP Signaling Gateway External is configured to register to the external NRS, and all other SIP Signaling Gateways register to the Internal NRS.

The Tertiary TLAN configuration applies only to the Survivable SIP Media Gateway. This tertiary configuration is used when the gateway cannot be connected to the primary and secondary Internal NRS (iNRS). The SIP Signaling Gateway at the Survivable Server and the SIP Media Gateway Controller are configured to point to each other (point-to-point connection). When the iNRS cannot be reached, calls from the Survivable Server can be routed to the SIP Media Gateway Controller. Similarly, incoming PSTN calls to the SIP Media Gateway Controller can be routed to the Survivable Server for processing.

ATTENTION
For performance and capacity, configuring the NRS in redirect mode will benefit from the increase in capacity. You can configure the SIP Signaling Gateway endpoints on the external NRS as Proxy mode. If the internal and external NRS are combined in one server, the SIP Signaling Gateway endpoint is configured as Proxy mode.

Copyright © 2010 Nortel Networks. All Rights Reserved.

Network Routing Service domain

The NRS domains are configured as follows:

- Level 0 (L0) domains are used for routing within an HA group and the associated gateways
- Level 1 (L1) domains are used for routing between HA groups

The Internal NRS is configured with multiple L0 domains and a single L1 domain. The HA group and associated SMGs and Survivable SIP MGs are configured in the same L0 domain. Other HA groups and the associated SMG and Survivable SIP MGs have a different L0 domain but share the same L1 domain. The Coordinated Dialing Plan (CDP) is used for calls to private on-net numbers within HA groups and the associated SMGs or Survivable SIP MGs. Uniform Dialing Plan (UDP) is used to route calls to private on-net numbers between HA groups. For bandwidth management, an HA Call Server pair cannot route directly to a Survivable SIP Media Gateway in a different HA group. Private number calls from an HA Call Server pair to a Survivable SIP Media Gateway are routed using CDP and only an HA Call Server within the same L0 domain as the Survivable SIP Media Gateway can route to it using CDP.

Internal NRS

- routes Private numbers (CDP, UDP, and Special Numbers)
- is the Network Connection Service (NCS) for IP Phone redirection from the survivable site to the HA Call Server pair
- configured with multiple Level 0 (L0) domains, one for each HA group and the associated SMGs or Survivable SIP MGs
- configured with only Level 1 (L1) domain that is used by all HA groups

External NRS

- contains E.164 routes for routing between HA groups within an HS system and between the HS system and external systems
- contains UDP routes for routing between the HS system and external systems
- configured with one Level 0 (L0) domain. Unlike the iNRS there is only one level 0 domain configured because there is no CDP routing at the eNRS.
- configured with one Level 1 (L1) domain

The following table shows the L0 and L1 domains configured for the SIP Signaling Gateway endpoints for HA group A1 and HA group A2. The L1 domain for the internal NRS (iNRS) is configured as L1. The L0 domain for

Copyright © 2010 Nortel Networks. All Rights Reserved.

HA group A1 and the associated SMGs and Survivable SIP MGs is L0A1. The L0 domain for HA group A2 and the associated SMGs and Survivable SIP MGs is L0A2.

Table 10
NRS Endpoint configuration example

HA group	SIP Signaling Gateway	LI domain	L0 domain
A1	SIP Signaling Gateway External	L1	L0
	SIP Signaling Gateway Internal	L1	L0A1
	Belleville Survivable Server	L1	L0A1
	Belleville SIP Media Gateway Controller	L1	L0A1
	Ottawa Survivable Server	L1	L0A1
	Ottawa SIP Media Gateway Controller	L1	L0A1
A2	SS SIPGW External	L1	L0
	SS SIPGW Internal	L1	L0A2
	Toronto Survivable Server	L1	L0A2
	Toronto SIP Media Gateway Controller	L1	L0A2

Route calls between HA Call Server pair and SIP Media Gateway Controller

For a High Scalability dial plan design, routing decisions occur in the HA Call Server pair or the NRS servers with minimal routing at the SIP Media Gateway Controller in the Survivable SIP Media Gateway. When you add another site in an HA group, most configuration occurs at the HA Call Server pair and the NRS servers. You are not required to reconfigure all existing Survivable SIP MGs. Routing between HA Call Server pair and the SIP Media Gateway Controller in the Survivable SIP Media Gateway occurs through the internal NRS.

Route calls from SIP Media Gateway Controller to HA Call Server pair

Calls that are not terminated locally at the SIP Media Gateway Controller are routed to the HA group using VNR. Typically these are calls that originate at the SIP Media Gateway Controller from TDM devices such as TDM phones or incoming PSTN calls from TDM trunks. The internal NRS is configured to tandem any calls from the SIP Media Gateway Controller to the HA group. The call is routed as-is with no digit manipulation and modifications to the call type.

Copyright © 2010 Nortel Networks. All Rights Reserved.

Route calls from HA Call Server to SIP Media Gateway Controller

Calls from the network to the SIP Media Gateway Controller are routed from the HA Call Server controlling the Survivable SIP Media Gateway. Each HA group belongs to a different LO domain within the internal NRS configuration; therefore, an HA group is prevented from routing calls directly to an SSMG that is associated with another HA group.

On-net number routing using Distance Steering Code

Numbers such as on-net calls destined to TDM devices on the Survivable SIP Media Gateway, are routed and terminated on the SIP Media Gateway Controller as seven-digit CDP numbers using Distant Steering Codes (DSC). To minimize the number of DSC and NRS routes required, Nortel recommends that TDM phones on the Survivable SIP Media Gateway have seven-digit DNs assigned in a specific range. For example, in the sample configuration, the DNs for TDM phones at the Belleville Survivable SIP Media Gateway are in the range 3435000 to 3435999. This range assignment requires only one steering code (DSC 3435) to be configured for routing to the internal NRS. In addition, only one route is required at the internal NRS (3435 CDP) to route calls to 3435xxxx to the Belleville SIP Media Gateway Controller.

Off-net number routing using Trunk Steering code

Numbers, such as off-net calls destined to the PSTN through the Survivable SIP Media Gateway, are routed from the HA Call Server to the SIP Media Gateway Controller using a Trunk Steering Code (TSC). The HA Call Server prepends the Survivable SIP Media Gateway numzone prefix with a special routing prefix to the E.164 number and changes the call type to CDP prior to routing the call through the internal NRS to the SIP Media Gateway Controller. When the call arrives at the SIP Media Gateway Controller, the prefix is stripped and the call type is changed to E.164 International before it routes the call to the PSTN.

ATTENTION
The Survivable Media Gateway is directly controlled by the HA Call Server so no additional routing is required.

ATTENTION
CDP DSC and TSC are configured uniquely for each HA group because they are used to route to a Survivable SIP Media Gateway associated with a specific HA group.

Network Routing Service route configuration

The following section describes the NRS route configuration for an internal NRS (iNRS) and an external NRS (eNRS).

Copyright © 2010 Nortel Networks. All Rights Reserved.

NRS route configuration—External NRS

The external NRS is used to route two types of numbers.

- E.164 numbers
- UDP and LOC numbers

External NRS—E.164 routing Routes for E.164 numbers can be further categorized into two types.

- Routes for on-net E.164 numbers
- Routes for off-net E.164 numbers

Routes for on-net E.164 numbers are used when the originating station is outside the HS system. This can be an incoming call from a SIP Session Border Control (SBC), another HS system or a Communication Server 1000E peer system that is not part of the HS system.

The on-net E.164 routes are not used when E.164 dialing is used for dialing private on-net numbers and the call originates within the HS system. This is because the E.164 number is internally converted to a seven-digit UDP number before being routed (by the internal NRS) to the appropriate HA group.

The off-net E.164 routes are used for routing to an HA group, another HS system, an SBC, or an external Communication Server 1000E system. Off-net E.164 numbers do not always route to the PSTN. For example, an off-net E.164 number can be a private number that terminates on another HS system or an external Communication Server 1000E system.

Route entries in the External NRS are used to route fully qualified E.164 numbers such as international E.164 numbers with country code. For a North American HS system, the entries include NPAs serviced by one or more SMG or Survivable SIP Media Gateway sites in the HA groups. Route entry is not necessary for all NPAs. A more generic route, such as route 1 for North America, can handle the remaining NPAs that are not serviced by any specific SMGs or Survivable SIP MGs in the HS system.

For a European HS system the entries are the country code and the area/regional code. Similar to the North American HS system, generic routes can also be used.

ATTENTION
The external NRS is used only to route calls to an HA group. Routing between HA groups and the associated Survivable SIP Media Gateway occurs using the internal NRS.

Copyright © 2010 Nortel Networks. All Rights Reserved.

Table 11
External NRS E.164 route configuration table for HS-A

Route	Cost	Destination	Description
1613	1	HA group A1 SIP Signaling Gateway 1	Off-net E.164 numbers (external to HS)
	2	SIP SBC 1 for North America	
	3	SIP SBC 2 for North America	
16139612	1	HA group A1 SIP Signaling Gateway External	On-net E.164 number for calls originating from outside the HS system
16139675	1	HA group A1 SIP Signaling Gateway External	On-net E.164 number for calls originating from outside the HS system
16139660100	1	HA group A1 SIP Signaling Gateway External	On-net E.164 number for calls originating from outside the HS system
1613763	1	HA group A1 SIP Signaling Gateway External	On-net E.164 number for calls originating from outside the HS system
1613765	1	HA group A1 SIP Signaling Gateway External	On-net E.164 number for calls originating from outside the HS system
1416	1	HA group A2 SIP Signaling Gateway External	Off-net E.164 numbers (external to HS)
	2	SIP SBC 1 for North America	
	3	SIP SBC 2 for North America	
1212	1	SIP SBC 1 for North America	Off-net E.164 numbers
	2	SIP SBC 2 for North America	
	3	External CS 1000E system	

Copyright © 2010 Nortel Networks. All Rights Reserved.

Table 11
External NRS E.164 route configuration table for HS-A (cont'd.)

Route	Cost	Destination	Description
1	1	SIP SBC 1 for North America	Off-net E.164 numbers
	2	SIP SBC 2 for North America	

The examples, as shown in Table 11 "External NRS E.164 route configuration table for HS-A" (page 69) and Table 12 "External NRS E.164 route configuration table for HS-B" (page 71), are based on Tail End Hop Off (TEHO) routing where calls are routed to the preferred gateways before being sent to the PSTN. In the HS-A table example, Belleville and Ottawa are in HA group A1 and are preferred gateways for the NPA 613. The route entry 1613 in the external NRS is configured with the least-cost route being HA group A1 so that any 1613-xxxxxxx calls can be routed to the preferred gateways (Belleville and Ottawa) that are part of HA group A1. If HA group A1 is unavailable, a second and third cost routes are configured to route to the external SIP SBCs. The NPA 416 is handled by the Toronto site in HA group A2. The 1416 route is configured with HA group A2 (cost=1), SIP SBC 1 (cost=2), and SIP SBC 2 (cost=3). The 1212 route example, as shown in the previous table, shows the least-cost route as an external Communication Server 1000E (Peer) system which is not part of the HS system.

For each off-net E.164 entry, if there are preferred gateways for the E.164 number then the least cost route is used for routing to the HA group that has the preferred gateways. All other routes (if exists) are for routing to external SBCs, as shown in the previous table for the 1613 and 1416 entries. An E.164 entry cannot have more than one route to an HA group, therefore, it is not possible to overflow to another HA group if the first HA group fails because this creates a potential loop in the TEHO routing. If there are no preferred gateways, then the E.164 entry only contains routes to SBCs or an external CS 1000E system, as shown in the previous table for Entry 1212.

The 16139612 route is an on-net E.164 route and is used for calls originating from outside the HS system. This route is used for calls to on-net numbers that terminate at HA group A1.

The NPAs that are not handled by specific sites are routed using the generic route entry (route 1) which has only the country code 1. The previous table also shows two costs associated with route 1 where HA group 1 is the preferred choice and SBC 2 is the second choice.

Copyright © 2010 Nortel Networks. All Rights Reserved.

Table 12
External NRS E.164 route configuration table for HS-B

Route	Cost	Destination	Description
353	1	HA group B1 Signaling Server SIPGW External	Off-net E.164 numbers
	2	SIP SBC 2 for Europe	
3539173	1	HA group B1 Signaling Server SIPGW External	On-net E.164 number for calls originating from outside the HS system
32	1	HA group B1 Signaling Server SIPGW External	Off-net E.164 numbers
	2	SIP SBC 2 for Europe	
32255	1	HA group B1 Signaling Server SIPGW External	On-net E.164 number for calls originating from outside the HS system

External NRS—UDP or LOC routing The UDP or LOC routes in the external NRS are used to route LOC calls to and from the HS system. You must configure the LOC in an HS system in the external NRS to route UDP calls to the HS system. The external NRS can contain UDP entries to route to sites in another HS system or an external Communication Server 1000E peer system.

The following table shows an example of UDP routes for the external NRS.

Table 13
External NRS UDP route configuration table for HS-A

Route	Cost	Destination	Description
343	1	HA group A1 SIP Signaling Gateway External	Used to route calls to an HA group within an HS system.
39	1	HA group A1 SIP Signaling Gateway External	Used to route calls to an HA group within an HS system.
248	1	HA group A1 SIP Signaling Gateway External	Used to route calls to an HA group within an HS system.
333	1	HA group A2 SIP Signaling Gateway External	Used to route calls to an HA group within an HS system.
444	1	HA group A2 SIP Signaling Gateway External	Used to route calls to an HA group within an HS system.
456	1	External CS 1000E peer system	Used to route calls to an external CS 1000E Peer system or another HS system

Copyright © 2010 Nortel Networks. All Rights Reserved.

NRS route configuration—Internal NRS

The internal NRS contains UDP and CDP route entries for routing between HA groups and between an HA groups and the associated Survivable SIP MGs. One UDP entry exists for each SMG or Survivable SIP Media Gateway site for which the route entry is the numzone prefix. In addition, two or more CDP entries exist for each Survivable SIP Media Gateway site. One CDP entry is used for CDP TSC to route off-net PSTN numbers from an HA group to the Survivable SIP Media Gateway. One or more entries are used for CDP DSC to route from the HA group to the TDM phone at the Survivable SIP Media Gateway.

Table 14
Internal NRS route configuration table

Route	Type	Cost	Destination
343	UDP	1	HA group A1 SIP Signaling Gateway Internal
3435	CDP	1	Belleville SIP Media Gateway Controller See Note 1.
3439000	CDP	1	Belleville SIP Media Gateway Controller See Note 2.
221	UDP	1	HA group A1 Signaling Server LTPS and H.323 Gateway for IP Phone redirection
570	UDP	1	HA group B1 SIP Signaling Gateway Internal
5705	CDP	1	Galway SIP Media Gateway Controller See Note 1.
5709000	CDP	1	Galway SIP Media Gateway Controller See Note 2.
224	UDP	1	HA group B1 Signaling Server LTPS and H.323 Gateway for IP Phone redirection
Note 1: This is configured as DSC on the Call Server.			
Note 2: This is configured as TSC on the Call Server.			

As shown in the previous table, the UDP 343 route is for routing between HA groups. For example, when a Toronto user calls an IP phone in Belleville (phone A 3432000), the call is sent from the HA group A2 to the internal NRS as 3432000 (type = LOC). The internal NRS routes the call to HA group A1.

Copyright © 2010 Nortel Networks. All Rights Reserved.

The CDP 3435 route is for CDP DSC routing for calls destined to TDM phones at the Belleville Survivable SIP Media Gateway, for example, TDM phone C 3435005.

The CDP 3439000 route is for routing off-net E.164 from HA group A1 to the Belleville SIP Media Gateway Controller. The HA Call Server pair prepends the Survivable SIP Media Gateway numzone prefix (343) and a special routing code (9000) to the E.164 number. The HA Call Server changes the call type to CDP prior to routing the call through the internal NRS to the SIP Media Gateway Controller. For example, a Belleville IP user calls an off-net PSTN number in the Belleville region by dialing 9-613-961-0790 (in which the first 9 is the access code). The HA Call Server A1 adds the prefix 3439000 to make the number 3439000-16139610790 (CDP) before sending it to the internal NRS for routing to the Belleville SIP Media Gateway Controller.

Entry 221 and 224 (UDP) are used for IP Phone redirection, as described in "IP Phone redirection" (page 99).

Network Routing Service collaboration

To minimize the number of external routes required, you can configure the external NRS to collaborate with another NRS. The second NRS can be an external NRS in a different HS system or a regular NRS in an non-HS system. Because the external NRS is for routing E.164 and UDP numbers, the service domain and L1 domains between the two NRS servers must match. The following figure shows the NRS collaboration between the external NRS servers in HS-A and HS-B.

Copyright © 2010 Nortel Networks. All Rights Reserved.

Figure 12
External NRS collaboration

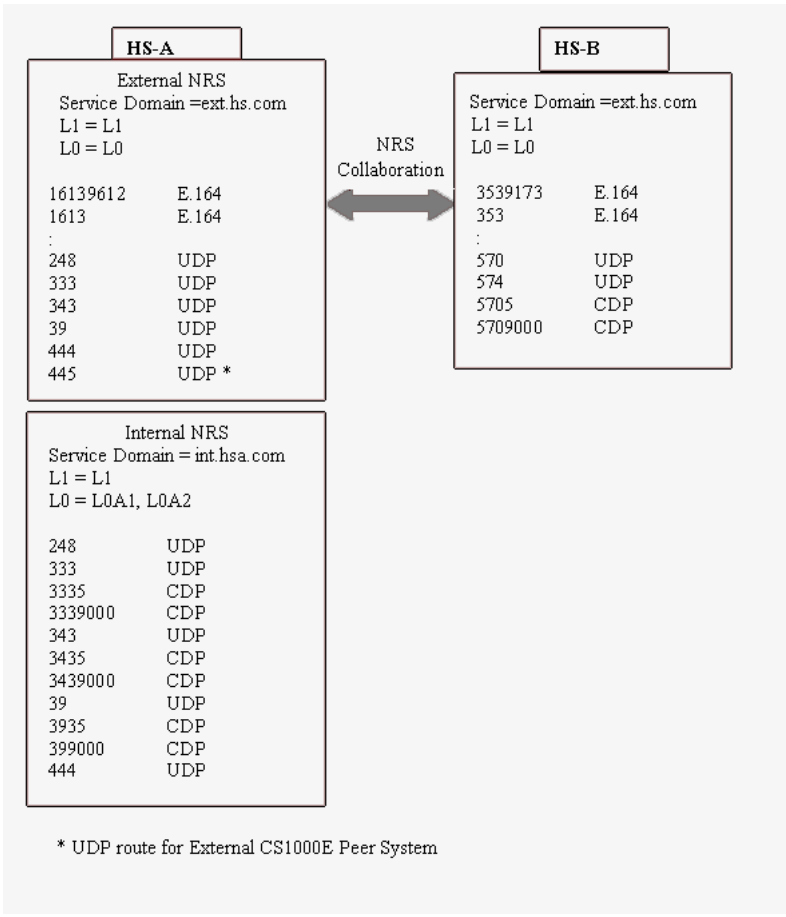

The service domains for both the HS-A and HS-B are configured as ext.hs.com for routing E.164 numbers through collaboration. The L1 domains for both HS systems are configured to be the same for collaborative UDP routing. The L0 domains do not have to match because the external NRS servers are not used for CDP routing.

No collaboration is required between the internal NRS servers from the two HS systems because the internal NRS is used for routing within an HS system between HA groups and between an HA Call Server pair and the associated Survivable SIP Media Gateway. It is not used to route calls to and from an external system.

Call Server network configuration

This section contains the configuration for Private and Public number routing.

Copyright © 2010 Nortel Networks. All Rights Reserved.

System Access Codes

System Access Codes

The following table shows the System Access Code configuration in a sample HS system used to describe call routing.

Table 15
System Access Codes

Access code	Type	Value
AC1	INTL NPA SPN NXX	99
AC2	LOC	66

Private number routing

Private number routing uses the LOC table. In the following table, there is one LOC entry for each numzone in an HS system. Each LOC entry matches the numzone prefixes. The LOC table is a common data configuration, so the same LOC entries exist in all HA Call Servers in an HS system.

The following three entries are associated with the Route List Index (RLI) for each LOC:

- First Entry (Entry 0): used to locally terminate the call in the HA group or the associated Survivable SIP Media Gateway
- Second Entry (Entry 1): used to route the call to a different HA group
- Remaining Entries (Entry 2 to Entry n): used for Alternate Call Routing (ACR) on-net to off-net conversion to route the call to the PSTN. For more information about Alternate Call Routing, see "Alternate Call Routing" (page 87).

The following table describes the LOC configuration for the Belleville site and the examples are for SMG or Survivable SIP MGs within the same High Scalability system (HS-A).

Table 16
RLI configuration table for LOC entries for Belleville—within the HS system

LOC	RLI entry	LTER	CONA	CNV	ROUT	SBOC	DMI
343	0	Yes	Yes	No	N/A	N/A	Call Type = CDP
	1	No	N/A	No	SIP route to internal NRS	RRA	Call Type = LOC

Copyright © 2010 Nortel Networks. All Rights Reserved.

LOC	RLI entry	LTER	CONA	CNV	ROUT	SBOC	DMI
	2	No	N/A	Yes	SIP route to internal NRS	RAA	INST = P9000 Call Type = CDP
	3	No	N/A	Yes	PRI route for Boston SMG	RRA	Call Type = INTL
	4	No	N/A	Yes	PRI route for Richardson SMG	NRR	Call Type = INTL

The LOC entry of 343 is for the Belleville numzone/site. Entry 0 is configured to try local termination as the first step. If a call is routed to this LOC and the number matches a local DN or a CDP DSC or TSC, the call terminates successfully. Therefore, Entry 0 succeeds if the call matches a DN in the HA group or is routed to one of the associated Survivable SIP Media Gateway through either DSC or TSC. Because the LOC entries are common data to all HA groups and the call can originate from the same HA group or from another HA group, the first attempt is to see if the call can be locally terminated, as shown in the previous table for Entry 0. As shown in Figure 8 "Sample HS system configuration" (page 54), an Ottawa user dials 6-343-2000 to reach Belleville IP Phone A. Although the call is a UDP call, the DN 3432000 exists in HA Call Server pair A1. Therefore, the LTER entry 0 successfully terminates the call on HA Call Server pair 1.

ATTENTION
Entry 0 has LTER configured to Yes and CONtinue Allowed (CONA) configured to Yes AND Step Back on Congestion (SBOC) configured to Reroute All (RRA).

Because CONA is configured to Yes in Entry 0, if Entry 0 fails, the call continues to Entry 1. If a call originates from a different HA group, for example, a Toronto user (in HA group A2) dials 6-343-2000 (a Belleville user in HA group A1), the call is routed internally in the HA Call Server A2 to the same LOC entry. Because DN 3432000 is not local to HA group A2 (or the Toronto Survivable SIP Media Gateway), the call fails on Entry 0 and continues to Entry 1. It is then routed to the internal NRS as 3432000 (UDP). The internal NRS uses route entry 343 (UDP) to route to the HA group A1. The LOC entry is common data; therefore, the call is routed internally to LOC 343 and terminates successfully with Entry 0 because DN 3432000 exists in HA Call Server A1.

SBOC is configured to RRA for Entry 1 to ensure the call continues to Entry 2 if the call fails on Entry 1. The remaining entries, Entry 2 to 4 are used for ACR on-net to off-net conversion.

Copyright © 2010 Nortel Networks. All Rights Reserved.

The following table describes the LOC configuration for dialing to a site that is external to HS system (HS-A). If the LOC is used for dialing to a site that is external to HS system (HS-A), Entry 0 is not configured to attempt the first step of local termination.

Table 17
LOC configuration table for Belgium—external HS system

LOC	Entry	LTER	CONA	CNV	ROUT	SBOC	DMI
574	0	No	N/A	No	SIP route to internal NRS	RRA	Call Type = LOC
	1	No	N/A	Yes	SIP route to internal NRS	RRA	INST = P9000 Call Type = CDP
	2	No	N/A	Yes	PRI route for Boston SMG	RRA	Call Type = INTL
	3	No	N/A	Yes	PRI route for Richardson SMG	NRR	Call Type = INTL

E.164 dialing for on-net calls

The LOC and SPN tables are used when dialing private on-net numbers using E.164 dialing. The values in the SPN table are used to recognize the on-net numbers before routing the call to the same LOC table, as shown in Table 16 "RLI configuration table for LOC entries for Belleville—within the HS system" (page 75). The following table shows some SPN entries used for on-net E.164 numbers in the sample HS system.

Table 18
RLI configuration for SPN Entries for on-net E.164 numbers

SPN-ARRN	RLI Entry	LTER	CONA	DMI
1613-9612	0	Yes	No	DEL = 7 INST = 66343 CTYP = LOC
1613-9675	0	Yes	No	DEL = 7 INST = 66343 CTYP = LOC
1613-763	0	Yes	No	DEL = 6 INST = 6639 CTYP = LOC
353 091-73	0	Yes	No	DEL = 8 INST = 66570 CTYP = LOC

The SPN-ARRN entry 1613-9612 is used to recognize that 613-961-2xxx numbers are on-net at the Belleville site. The DMI associated with this entry deletes the leading seven-digits and inserts 66-343 for which the 66 is the System AC2 and 343 is the numzone prefix for Belleville.

Copyright © 2010 Nortel Networks. All Rights Reserved.

For example, an Ottawa user dials 61-613-961-2000. The 61 is configured as NPA in the ZFDP table so the number is internally converted to AC1 + 1 + 613-961-2000. For this example, it is important to note that NPA and SPN are configured as AC1 in LD 15 NET_DATA. The AC1 internally routes the call on HA Call Server pair A1 to the AC1 table and the remaining digits (16139612000) match the SPN entry 1613-9612. The DMI for this SPN entry changes the number to 66-343-2000. LTER is configured to Yes which causes the HA Call Server pair to attempt to resolve the number again where it finds 66 matches the system AC2 and 343 matches the LOC entry in the LOC table. The call is then routed internally to the LOC table where the call is processed in the same way as a location code call (6-343-2000).

Public number routing

There are two recommended types of routing for public or off-net PSTN numbers:

- Tail End Hop Off (TEHO) routing
- Source Based Routing using local gateways

Tail End Hop Off routing

For Tail End Hop Off routing (TEHO), calls are routed to the preferred gateways before being sent to the PSTN. The public or off-net PSTN numbers are routed as follows:

1. If the call originates from an HA group with no preferred gateways, the call is routed to the external NRS. The external NRS determines the appropriate gateway endpoint to handle the call; that could be an HA group (that has the preferred gateways), an SBC, or an external Communication Server 1000 system. If the call originates from within an HA group that has the preferred gateway, the call must not route to the external NRS because the external NRS will route the call back to this HA group and cause a looping issue.
2. When the call is routed to or originated from within the HA group that has the preferred gateway, it is processed using the Route List Block (RLB) for this specific E.164 number. The RLB contains a list of entries for routing the call in order of preference. The RLB entries are ordered

Copyright © 2010 Nortel Networks. All Rights Reserved.

with any entries with free calling areas first, followed by entries with no free calling area.

3. If the call fails to route through the preferred gateways, external SBC, or an external Communication Server 1000E system, the call is routed using the local gateway at the originating HA group as the last choice.

   Note: Calls originating from a TDM phone at a Survivable SIP Media Gateway are first routed through VNR by the SIP Media Gateway Controller to the HA Call Server. After the call reaches the HA Call Server, the call is routed as described in the preceding steps.

To implement the TEHO routing scheme described above, the following configuration steps are required.

1. There are two types of Trunk Steering Codes (TSC) to be defined uniquely for each HA group. The TSC is inserted as a prefix to the E.164 number in the RLI entry for routing the E.164 number.
   - External Routing TSC: A unique TSC is configured for each HA group for routing calls to the external NRS, if necessary. For example, in the sample HS system, TSC 90001 is configured only for HA group A1 and TSC 90002 is configured only for HA group A2. These TSCs are configured to route to the external NRS.
   - Media Gateway Routing TSC: Another unique TSC is configured for each numzone in an HA group. TSC is used for routing from the HA group to its associated media gateways. This TSC should begin with the numzone prefix and followed by a special code. The TSC can be configured to route the call to a PRI route at a Survivable Media Gateway or to a Survivable SIP Media Gateway using SIP trunk. For example, in the sample HS system, the TSC 3439000 is configured for Belleville where 343 is the numzone prefix and 9000 is a special code for routing purposes.
2. The SPN tables are used to handle E.164 numbers. The RLI entries for an SPN entry for off-net PSTN TEHO routing are configured as three groups.
   - Group 1: Consists of all the entries that use DMI to insert the corresponding External Routing TSC for all the HA groups that do not have a preferred gateway for this SPN. These entries are configured to be Local TERminated (LTER = yes) and the inserted TSC will route the call to the external NRS.
   - Group 2: Consists of all the entries that use DMI to insert the corresponding Media Gateway Routing TSC for the HA group that has the preferred gateways.
   - Group 3: Consists of one entry that dynamically inserts the numzone prefix of the originating phone and a special code. The

Copyright © 2010 Nortel Networks. All Rights Reserved.

purpose is to match the Media Gateway Routing TSC for routing the call using the local media gateways. For example, in the sample HS system, the DMI for this entry is configured with INST = P9000, where P is the numzone prefix of the originating phone.

The following table shows the three groups of RLI entries.

Table 19
RLI configuration for SPN entries used for off-net E.164 numbers using preferred gateways within an HS

SPN	RLI	DMI	Description
XXXX	Entry 0	INST = 9000x CTYP = CDP	Group 1 entries
	Entry 1 :		
	Entry n		
	Entry n + 1	INST = (numzone prefix) 9000 CTYP = CDP	Group 2 entries
	Entry n + 2 :		
	Entry m	INST = P9000 CTYP = CDP	Group 3 entry

ATTENTION
The SPN table contains common data that exists in all the HA groups in an HS system.

In the following table, there are four HA groups in an HS system: HA1, HA2, HA3, and HA4. TSC 90001 is configured only for HA1, TSC 90002 is configured only for HA2, TSC 90003 is configured only for HA3, and TSC 90004 is configured only for HA4. The preferred gateways for SPN 1413 are in HA2.

Group 1 is the list of 9000x entries, one for each HA group to route to the external NRS. Therefore, Group 1 has 90001, 90003, and 90004 entries for HA1, HA3, and HA4 respectively. 90002 for HA2 must not be in Group 1. When HA2 processes a call destined for SPN 1413, routing through Group 1 entries will fail since the TSC 90001, 90003, and 90004 are not configured for HA2 and the call is not routed to the external NRS. Looping is prevented since the external NRS would have routed the call back to HA2.

In addition, the external NRS can only have routes to the preferred HA group and optionally to external SBCs or to a Communication Server 1000 system. There must not be any routes in the NRS for the corresponding

Copyright © 2010 Nortel Networks. All Rights Reserved.

E.164 number (1413) which route back to HA1, HA3, or HA4. Otherwise, when these HA groups route the SPN 1413 calls to the external NRS, the calls are routed back to the HA groups and call looping occurs.

Group 2 is a list of all the preferred gateways for the preferred HA group. In the following table, the numzone prefixes for the preferred gateways are 555 and 578.

Group 3 has only one entry that is used for routing the call using the local gateway at the originating site when the previous entries failed.

Table 20
RLI configuration example for four HA groups

SPN	RLI	DMI	Description
1413	Entry 0	INST = 90001	Group 1 entries
	Entry 1	INST = 90003	
	Entry 2	INST = 90004	
	Entry 3	INST = 5559000	Group 2 entries
	Entry 4	INST = 5789000	
	Entry 5	INST = P9000	Group 3 entry

If there are no preferred gateways for a particular SPN (for example, 1705) in any HA groups, the SPN table contains only RLI entries for routing to the external NRS and a fallback entry for using the local gateway. Therefore, the RLI entries consists of only Group 1 and Group 3 entries, as shown in the following table.

It is critical that the external NRS does not route the call back to any of the HA groups. Therefore, do not configure any routing entry for this SPN that will route back to any HA groups.

Table 21
RLI configuration for SPN entries used for off-net numbers using external SBC or a CS 1000 system

SPN	RLI	DMI	Description
1705	Entry 0	INST = 90001	Group 1 entries
	Entry 1	INST = 90002	
	Entry 2	INST = 90003	
	Entry 3	INST = 90004	
	Entry 4	INST = P9000	Group 3 entry

Copyright © 2010 Nortel Networks. All Rights Reserved.

Public routing (off-net) with CLID restriction

In some jurisdictions, service providers are required to authenticate the CLID of outgoing calls to match the DID numbers that are terminated on that service. In this situation, off-net E.164 numbers are routed differently within the HS system. The gateway must be selected based on the numzone or site of the originating call (also known as source based routing). This is achieved by configuring RLI with only a Group 3 entry (DMI with INST = P9000). An example of the SPN entry is shown in the following table.

Table 22
SPN configuration for routing public off-net numbers with CLID restriction

SPN	RLI Entry	LTER	CONA	SBOC	Route	DMI
1613	0	Yes	No	NRR	N/A	INST = P9000 CTYP = CDP

In this example, if an IP user in Belleville (numzone prefix 343) calls the public number 613-764-1234, the number changes to 343900016137641234 where 3439000 is inserted by the DMI. Because LTER is configured as Yes, the number matches the Media Gateway Routing TSC 3439000 and the call is routed to the Belleville SIP Media Gateway Controller.

Detailed configuration for the sample HS system

This section describes the RLI configuration and TSC configuration with detailed examples using the Figure 8 "Sample HS system configuration" (page 54).

RLI configuration The following section is a detailed example of RLI entries for SPN 1613.

Table 23
RLI configuration for an SPN for off-net E.164 number

SPN	RLI entry	LTER	CONA	Free calling screening	DMI	Description
1613	0	Yes	Yes	No	INST = 90002 CTYP = CDP	Group 1
	1	Yes	Yes	Yes	INST = 399000 CTYP = CDP	Group 2
	2	Yes	Yes	Yes	INST = 3439000 CTYP = CDP	

Copyright © 2010 Nortel Networks. All Rights Reserved.

SPN	RLI entry	LTER	CONA	Free callin g screenin g	DMI	Description
	3	Yes	Yes	No	INST = 399000 CTYP = CDP	
	4	Yes	Yes	No	INST = 343000 CTYP = CDP	
	5	Yes	No	No	INST = P9000 CTYP = CDP	Group 3

The DMI for Entry 0 inserts the 90002 in front of the E.164 number (1613...) and changes the type to CDP. The modified number (900021613...) is used to match an External Routing TSC 90002. The TSC 90002 removes the 90002 prefix and changes the type back to E.164. The called number sent to the external NRS is the original E.164 number (1613...).

For HA group A1, routing a 1613 call fails Entry 0 (because 90002 is not a configured TSC for HA group A1) and continues to Entry 1. For HA group A2, the 90002 is a configured TSC and therefore the 1613 call is routed to the external NRS.

Entries 1 to 4 are only used by HA group A1 to route calls to its associated Survivable SIP Media Gateway. Entries 1 to 4 fail if they are used by other HA groups.

Entry 1 is used by HA group A1 to route to the Ottawa Survivable SIP Media Gateway. Free call screening is also enabled for Entry 1 so only off-net numbers with the toll-free NXXs in the NPA 613 for the Ottawa site are allowed. The DMI for Entry 1 inserts 399000 in front of the E.164 number. The modified number matches the Media Gateway Routing TSC 399000. The TSC 399000 is configured to route the call to the internal NRS. There is a CDP routing entry (399000) in the internal NRS for routing the call to the Ottawa Survivable SIP Media Gateway.

Entry 2 is similar to Entry 1 except that it is using a Media Gateway Routing TSC (3439000) to route the call to the Belleville Survivable SIP Media Gateway.

Entries 3 and 4 are similar to Entries 1 and 2 respectively. The only exception is that the free call screening is not enforced.

Entry 5 is a fallback entry that is used to route calls using the gateways associated with the originating HA group. If all the previous entries fail, the call is routed using sourced based routing through the local gateway of the originating site. The DMI for Entry 5 inserts the P9000 in front of

Copyright © 2010 Nortel Networks. All Rights Reserved.

the E.164 number where P is the numzone prefix of the originating phone. This number is used to match the Media Gateway Routing TSC configured for the originating HA group. The TSC is configured to route the call to the appropriate gateway.

CONA is configured to Yes for Entries 0 to 4 to allow the call to proceed to the next entry if the current entry fails. CONA is configured to No for Entry 5 because it is the last entry in the RLI.

Trunk Steering Code configuration

The Trunk Steering Code (TSC) configuration for HA group A1 and A2 are shown in the following table.

Table 24
TSC configuration for routing to the SIP Media Gateway Controller

HA group	TSC	RLI Entry	LTER	Route	DMI
A1	90001	0	No	SIP route to external NRS	DEL = 5 INST = none CTYP = INTL
	3439000	0	No	SIP route to internal NRS	INST = none CTYP = CDP
	399000	0	No	SIP route to internal NRS	INST = none CTYP = CDP
	2489000	0	No	PRI route at Boston SMG	DEL = 7 INST = none CTYP = INTL
A2	90002	0	No	SIP route to external NRS	DEL = 5 INST = none CTYP = INTL
	3339000	0	No	SIP route to internal NRS	INST = none CTYP = CDP
	4449000	0	No	PRI route at Richardson SMG	DEL = 7 INST = none CTYP = INTL

For the External Routing TSC (9000x), before the call is routed to the external NRS, the prefix is removed so the call is routed as a fully qualified E.164 number. For example, if a user in HA group A2 dials the off-net PSTN number 16139610790, the TSC 90002 is used to delete the 90002 prefix and to route the call to the external NRS with the original PSTN number.

The Media Gateway Routing TSCs are used to route the call to a Survivable SIP Media Gateway or to a Survivable Media Gateway. One TSC is required for each site equipped with SMG or Survivable SIP Media Gateway. The TSC approach simplifies the dial plan design because

Copyright © 2010 Nortel Networks. All Rights Reserved.

the SPN entries for off-net E.164 numbers are configured the same regardless of whether the call is routed to an SMG or a Survivable SIP Media Gateway.

If the call is routed to a Survivable SIP Media Gateway, the TSC is included as part of the call information when the call is sent to the internal NRS. The Survivable SIP Media Gateway removes the TSC prefix before the call is routed to the PSTN. In the sample HS system, the TSC 3439000 is used for routing to the Belleville Survivable SIP Media Gateway through the internal NRS. The internal NRS has a CDP routing entry for 3439000 which routes the call to the Belleville Survivable SIP Media Gateway. When the call arrives at the Belleville SIP Media Gateway controller, the 3439000 prefix is removed before the call is routed to the PSTN through a PRI trunk.

If the call is routed to the PSTN through a PRI trunk on a Survivable Media Gateway, the DMI entry of the corresponding TSC is configured to remove the TSC prefix. For example, TSC 2489000 is used to route the call to the Boston SMG. The TSC is configured with a DMI that removes the prefix and routes the call to the PRI trunk to PSTN.

Call flow example using TEHO routing

This section describes a call flow scenario using TEHO routing where the preferred gateway is within the HS system.

In this example, a user in Toronto calls a PSTN number in the Belleville region by dialing 61-613-961-0790. 61 is configured as the NPA access code in the ZFDP table for the Toronto numzone. This numzone based NPA access code is internally replaced by the system access code 1 (AC1=99) and the country code (CC=1) of the HA Call Server A2. The number becomes 99-1-613-961-0790. AC1 is configured to handle NPA and SPN calls.

From the AC1 table, the remaining digits (16139670790) match the SPN entry 1613. Entry 0 inserts the 90002 prefix and LTER is configured to yes. The resulting digit string (9000216139610790) matches the External Routing TSC 90002 which is configured only for HA Call Server A2. TSC 90002 removes the 90002 prefix and routes the call to the external NRS as an E.164 number. The 1613 E.164 route in the external NRS routes the call to HA Call Server A1 using the least-cost route.

The same SPN table exists in the HA Call Server A1 so the number 16139610790 matches the same 1613 SPN entry. HA Call Server A1 fails to route the call using Entry 0 because there is no match for 9000216139610790 since TSC 90002 does not exist in HA Call Server A1. SBOC is configured to RRA so the routing of the call continues to Entry 1. Entry 1 has free call screening enabled and allows toll-free NXX

Copyright © 2010 Nortel Networks. All Rights Reserved.

numbers in the Ottawa region. NPA-NXX 613-961 is not in the Ottawa region free calling area so the call to the PSTN number 16139610790 cannot be routed using Entry 1. However, CONA is configured to Yes for Entry 1 so the routing of the call continues to Entry 2. Entry 2 also has free call screening enabled and allows toll-free NXX numbers in the Belleville region where NPA-NXX 613-961 is allowed. The DMI for Entry 2 inserts the 3439000 prefix and LTER is configured to Yes. The resulting digit string (3439000161396107 90) matches the Media Gateway Routing TSC 3439000 configured only for HA Call Server A1.

The call is routed using the TSC as a CDP number to the internal NRS. The CDP route entry 3439000 in the internal NRS routes the call to the Belleville Survivable SIP Media Gateway. At the Belleville SIP Media Gateway Controller, the 3439000 prefix is removed and the call is routed to the PSTN using the PRI trunk.

If the off-net number is not free to any of the Belleville or Ottawa site, Entry 1 and Entry 2 fail. In this situation, the call is routed again using Entry 3 to Ottawa without any free calling restrictions.

DID trunk configuration for incoming PSTN calls

Incoming Digit Conversion (IDC) may be required for DID calls before the calls can be routed. This applies when the Central Office (CO) only sends the last four-digits of the DID number. Using the IDC table, the appropriate numzone prefix can be added to the four-digit DID number to form the seven-digit internal DN.

For example, when a call is made to 613-961-2000, only the last four digits (2000) are sent from the Central Office to the Belleville Survivable SIP Media Gateway. The DID route at the SIP Media Gateway Controller is configured to use IDC to convert the incoming four-digit number to a seven-digit DN by adding the Belleville numzone prefix (343). The following configuration is for the IDC table at Belleville:

Table 25
IDC table—four digit DID number

Incoming Digits (IDGT)	Converted Digits (CDGT)	Description
2	3432	convert 2xxx to 3432xxx; where 343 is the Belleville numzone prefix
5	3435	convert 5xxx to 3435xxx; where 343 is the Belleville numzone prefix

IDC may also be required when the Central Office includes NXX in the DID number. Using the IDC table, the DID number can be mapped to the corresponding seven-digit internal DN. The IDC is configured as follows:

Copyright © 2010 Nortel Networks. All Rights Reserved.

Table 26
IDC table—seven digit DID number

Incoming Digits (IDGT)	Converted Digits (CDGT)	Description
8632	3332	convert 8632xxx to 3332xxx; where 333 is the Toronto numzone prefix
8635	3335	convert 8635xxx to 3335xxx; where 333 is the Toronto numzone prefix

Alternate Call Routing

Alternate Call Routing (ACR) is used in a survival scenario (for example, WAN outage) or in an out-of-bandwidth scenario. ACR reroutes a call that was dialed using private or location code dialing to the PSTN. During WAN outage, the survivable site is isolated from the remainder of the IP network and any call to the private or on-net numbers is routed to the PSTN. If an IP call is blocked due to out-of-bandwidth, ACR is used to reroute a call to the PSTN.

Configuration of ACR consists of configuring Zone Alternate Prefix Table (ZALT) and LOC entries with appropriate CNV settings.

Table 27
RLI configuration for LOC Entries

LOC	RLI Entry	LTER	CONA	CNV	ROUT	SBOC	DMI
343	0	Yes	Yes	No	N/A	RRA	Call Type = CDP
	1	No	N/A	No	SIP Route to internal NRS	RRA	Call Type = LOC
	2	No	N/A	Yes	SIP Route to internal NRS	RRA	INST = P9000 Call Type = CDP
	3	No	N/A	Yes	PRI route for Boston SMG	RRA	Call Type = INTL
	4	No	N/A	Yes	PRI Route for Richard son SMG	NRR	Call Type = INTL

As described in “Private number routing” (page 75), Entry 0 and Entry 1 are used for local call termination or for routing calls to another HA group. If these entries fail, the call is then routed using the next set of entries (Entry 2 to Entry 4) to the PSTN. These entries perform the conversion

Copyright © 2010 Nortel Networks. All Rights Reserved.

from on-net to off-net to convert the number from a UDP LOC number to an E.164 number. ACR in survival mode is triggered for the following call types:

- Calls between numzones in the same HA group
- Calls between numzones in different HA groups

ACR for internumzone calls in the same HA group

In survival mode, the Survivable Server becomes the active Call Server and the database is replicated from the HA Call Server. When calling between numzones in the same HA group, the called DN exists in the replicated database of the Survivable Server. Referring to the sample HS Figure 8 "Sample HS system configuration" (page 54) diagram, a user in Ottawa with IP Phone D (3935000) calls IP Phone A in Belleville (3432000) by dialing 6-343-2000. In a survival mode scenario, IP Phone A is registered to the Belleville Survivable Server and IP Phone D is registered locally to the Ottawa Survivable Server. The Belleville and the Ottawa Survivable Servers have the same database replicated from HA group A1 so DN 3432000 and 3935000 exist in both Survivable Servers. A user in Ottawa with IP Phone D (393500) dials 6-343-2000, the call is routed using LOC 343 on the Ottawa Survivable Server. The attempt to locally terminate the call on Entry 0 fails because the IP Phone 343200 is not registered to the Ottawa Survivable Server even though the 3432000 DN exists in the database. This is a special condition in which the IP Phone is configured but unregistered. The Ottawa Survivable Server is triggered to search the list of entries in the RLI for the first entry with CNV configured to Yes. For the LOC 343, the call skips Entry 1 and goes to Entry 2. The number is then converted from a UDP LOC number to an E.164 number. The CNV fields for LOC 343 Entry 2 are configured as follows:

Example:

```
LDN 16139660100
DID yes
MXX yes
SAVE 4
OFFC 961
RNGE 2000 3999
OFFC 967
RNGE 5000 5999
```

In the previous example, 3432000 is converted to 16139612000. The DMI for Entry 2 can be configured to modify the called number as follows:

Copyright © 2010 Nortel Networks. All Rights Reserved.

INST = P9000 inserts the originator numzone prefix + 9000 to 16139612000 so the number becomes 39900016139612000 (Type = CDP) because the Ottawa numzone prefix is 39.

During a WAN outage, the Survivable Server and the SIP Media Gateway Controller for the site are no longer registered to the internal NRS. The call is routed directly to the SIP Media Gateway Controller (point-to-point connection). When the call arrives at the Ottawa SIP Media Gateway Controller, the 399000 prefix is removed and the call is routed to the PSTN.

ACR also applies to calls originating from a TDM phone at the Survivable SIP Media Gateway. Configuration for ACR is not needed at the SIP Media Gateway Controller since all calls are routed to HA Call Server or the Survivable Server. The ACR treatment is provided by the HA Call Server or the Survivable Server.

ACR for SMG sites in survival mode does not use the P9000 entry for routing calls to the PSTN but rather the entries for the SMG PRI Routes are used instead. For example, Boston has an Survivable Media Gateway (SMG) and has a PRI connection to the PSTN. When a Boston is in survival mode and a Boston user calls Belleville IP Phone A, Entry 0 fails because the DN 3432000 is configured in Boston Survivable Server but it is not registered. The call then continues to Entry 2 which is the first entry with CNV = yes. However, in survival mode Boston SMG SIP routes cannot register to the internal NRS and Entry 2 fails. The call proceeds to Entry 3 which also has CNV = yes. The number is then converted from 3432000 to 16139612000 and routed to the PRI route for the Boston SMG to the PSTN.

ATTENTION
The RLI for a LOC entry must have all the SMG PRI routes in the HS system. This is because LOC entries are common data in all HA groups. In the table, Table 27 "RLI configuration for LOC Entries" (page 87), the LOC 343 contains the PRI route for the Boston SMG as well as the Richardson SMG.

ACR for internumzone calls in different HA groups

For calls between HA groups, the called DN is not configured in the local Survivable Server but ACR still applies to route the call to the PSTN. For example, an IP user in Toronto calls an IP user Phone A in Belleville by dialing 6-343-2000. The DN 3432000 is not configured on the Toronto Survivable Server in this example so Entry 0 fails because the DN is not local and the call continues to Entry 1. The Toronto site is in survival mode and the Toronto Survivable Server can no longer register to the internal NRS. A point-to-point connection between the Toronto Survivable Server and the Toronto SIP Media Gateway Controller allows Entry 1 to route the call as UDP/LOC to the Toronto SIP Media Gateway Controller.

Copyright © 2010 Nortel Networks. All Rights Reserved.

However, the SIP Media Gateway Controller rejects the call because the number is not local to the SIP Media Gateway Controller and the SIP Media Gateway Controller cannot route the call back to the Survivable Server using VNR due to trunk access restriction. Trunk Access Restriction is configured to prevent looping on the SIP Media Gateway Controller, that is blocking incoming calls from routing back through the same route. The Survivable Server continues to route the call to Entry 2 because SBOC is configured for Entry 1. The number is converted from 6-3432000 to 16139612000. The DMI appends 3339000 to the number because the originating phone is in the Toronto numzone with a prefix of 333 and the call is once again routed to Toronto SIP Media Gateway Controller. At the Toronto SIP Media Gateway Controller, the 3339000 prefix is removed and the call is routed to the PSTN.

The SMG, for example, the Richardson IP user dials 6-3432000 to Belleville IP Phone, Entry 2 fails because the SIP routes for the Richardson SMG are in survival mode. Entry 3 also fails because the PRI route does not exist in the Richardson Survivable SIP Media Gateway. Using SBOC, the call continues to Entry 4 where the number is converted before being routed through the Richardson PRI route to the PSTN.

On-net to Off-net conversion for sites with multiple NPAs

For sites with multiple Numbering Plan Areas (NPA), the OFFC in the LOC CNV is configured to include the NPA used during the conversion. For example, the Toronto site has the 905, 416, and 289 NPA and the seven-digit LOC numbers are converted, as shown in the following table.

Table 28
Multiple NPAs

DN range	Local four-digit DN	NPA	NXX
3332400–3332499	2400–2499	905	863
3332500–3332599	2500–2599	905	866
3332600–3332999	2600–2999	416	871
3333000–3333599	3000–3599	289	595
3336000–3336299	6000–6299	905	863

To account for the different NPAs, the CNV for LOC 333 Entry 2 is configured with the NPAs included in the OFFC, as shown below.

Example:

LDN 19058633000
DID YES
MNXX YES
SAVE 4
OFFC 905863
RNGE 2400 2499

Copyright © 2010 Nortel Networks. All Rights Reserved.

6000 6299
OFFC 905866
RNGE 2500 2599
OFFC 286595
RNGE 3000 3599

Call flows for ACR

With Zone Based Dialing, you can centrally manage the dial plan across various locations to ensure the user experience remains the same whether the user is registered to the Primary or to the Survivable Server. The following diagrams demonstrate the call flows for internumzone dialing when the terminator is in survival mode or when both the originator and terminator are in survival mode.

The following figure demonstrates a call scenario where a call is placed from a telephone that is registered to the Primary Call Server to a telephone that is registered to a Survivable Server.

1. A user dials 6-343-2000.
2. The dialed digits change according to the dial plan to route the call over the alternate route to the PSTN.
3. The Primary call server routes the call to the NRS for additional routing information.
4. The NRS routes the call to the nearest PSTN gateway.
5. The call reaches the PSTN gateway and routes the call to the Belleville Survivable SIP Media Gateway.
6. The call terminates at the desired destination (3432000).

Copyright © 2010 Nortel Networks. All Rights Reserved.

Figure 13
Internumzone dialing with terminator in survival mode

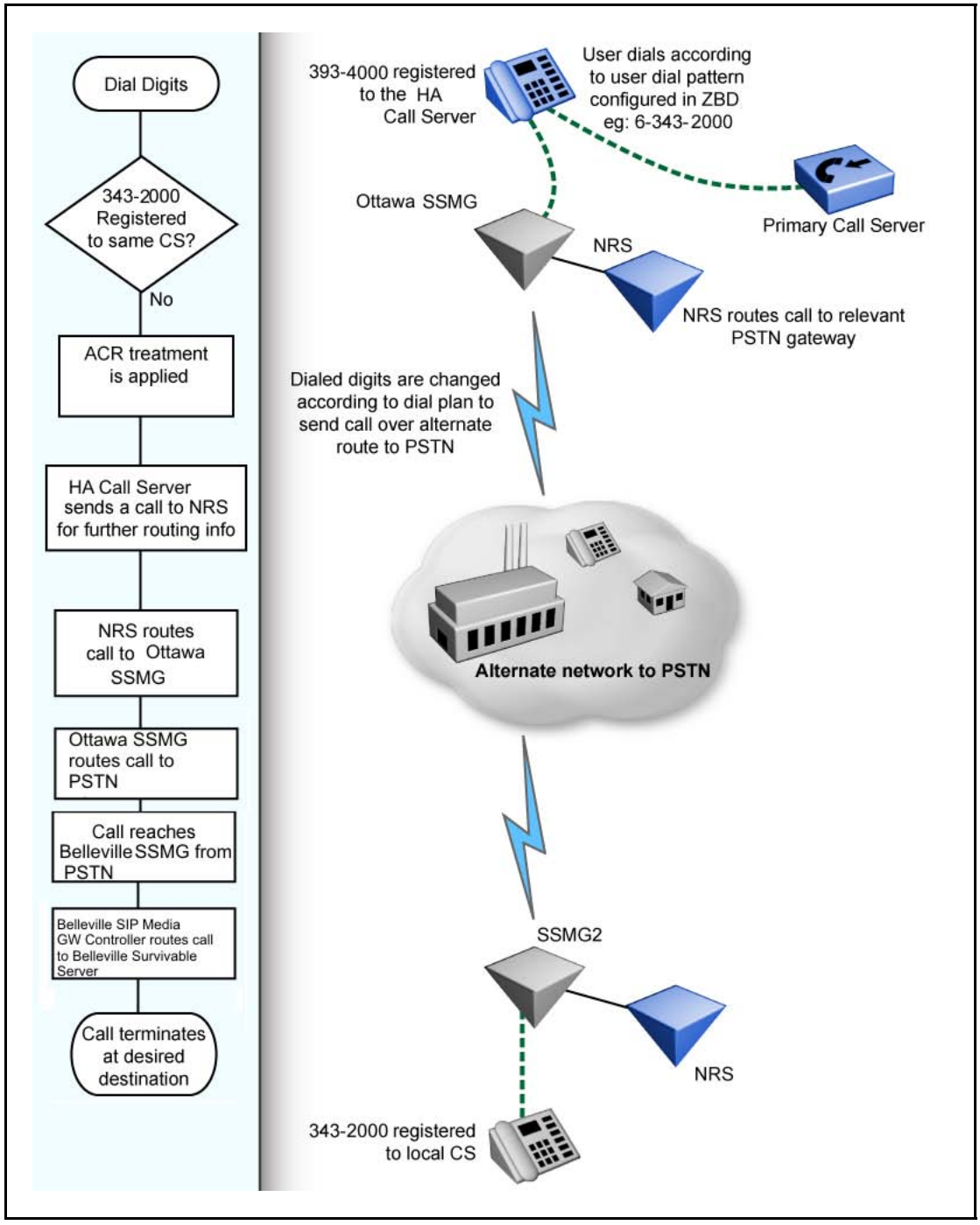

The following figure demonstrates a call scenario where the originator and terminator are in survival mode and both telephones are registered to the respective Survivable Servers.

Copyright © 2010 Nortel Networks. All Rights Reserved.

1. A user dials 6-343-2000.
2. The dialed digits change according to the dial plan to route the call over the alternate route to the PSTN.
3. The call reaches the PSTN gateway and routes the call to the Belleville Survivable SIP Media Gateway.
4. The call terminates at the desired destination (3432000).

Copyright © 2010 Nortel Networks. All Rights Reserved.

Figure 14
Originator and terminator are in survival mode: registered to local Survivable Server

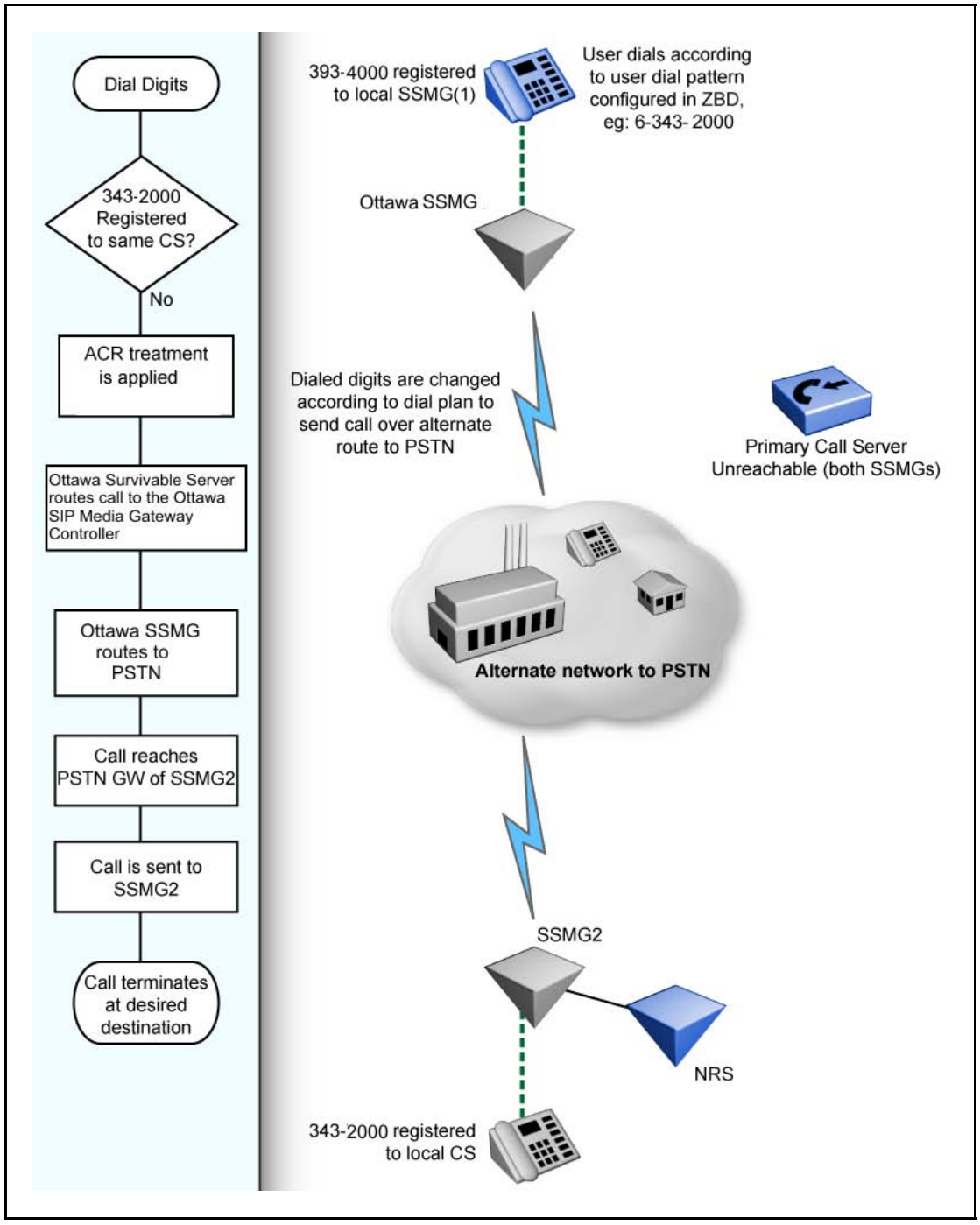

Copyright © 2010 Nortel Networks. All Rights Reserved.

Secondary Call Server configuration for Geographic Redundancy

This section describes the additional configuration required if Geographic Redundancy (GR) is configured for the High Scalability (HS) system. In the following figure, the HA groups in Data Center 1 have corresponding GR Secondary HA groups in Data Center 2. The database from the Primary HA Call Servers are replicated to the Secondary HA Call Servers. If the Primary HA Call Server is down, the IP Phones are redirected to the Secondary HA Call Server in Data Center 2.

Figure 15
HS system with Geographic Redundancy configuration

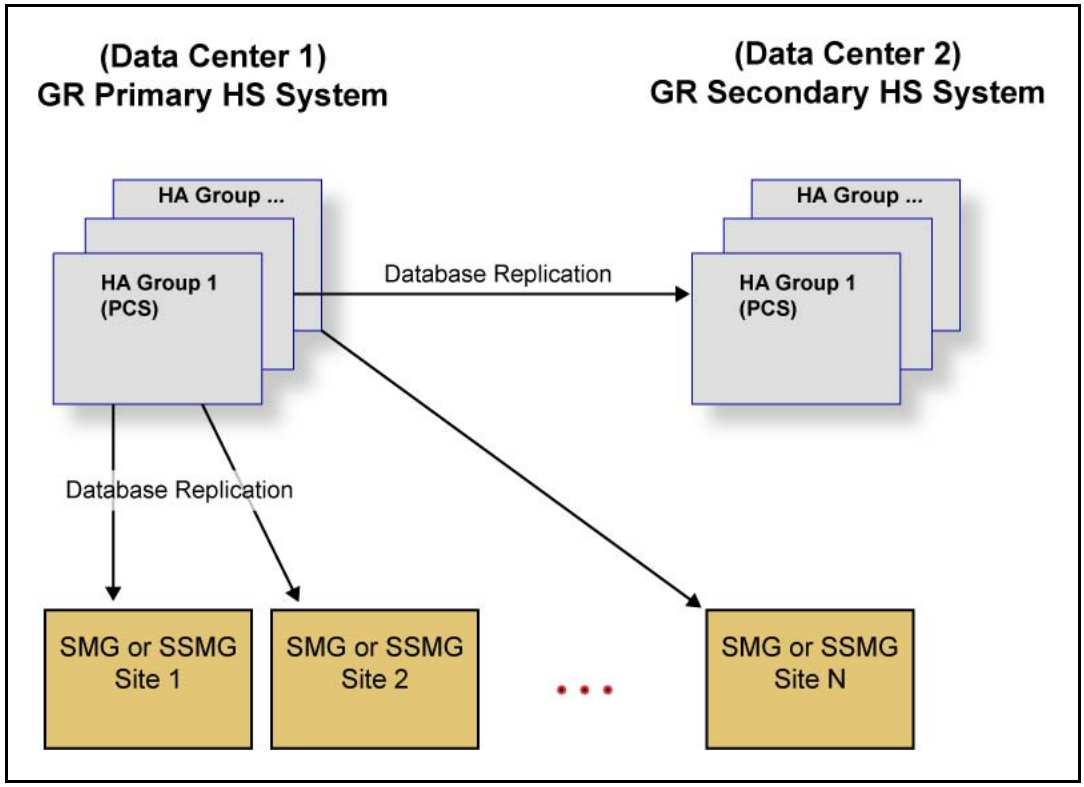

The internal and external NRS servers are configured with higher cost routes for the SIP Signaling Gateway associated with the Secondary HA Call Server, as shown in the following tables.

Table 29
External NRS route configuration for GR Secondary Call Server

Route	Cost	Destination
1613	1	HA group A1 Primary Call Server SIP Signaling Gateway
	2	SIP SBC 1 for North America
	3	SIP SBC 2 for North America
	4	HA group A1 Secondary Call Server SIP Signaling Gateway

Copyright © 2010 Nortel Networks. All Rights Reserved.

Table 30
Internal NRS route configuration for GR Secondary Call Server

Route	Type	Cost	Destination
343	UDP	1	HA group A1 Primary Call Server SIP Signaling Gateway
343	UDP	2	HA group A1 Secondary Call Server SIP Signaling Gateway
3435	CDP	1	Belleville Survivable SIP Media Gateway SIP Signaling Gateway
3439000	CDP	1	Belleville Survivable SIP Media Gateway SIP Media Gateway Controller

Node ID assignments for Signaling Server applications

An HA group has multiple Signaling Server applications that require Node ID assignments. The Node ID assignments must allow the IP Phones, SIP Signaling Gateway, and Virtual Trunk (VTRK) routes to operate in normal mode and survival mode. Two methods are available to assign Node IDs for Signaling Server applications:

- align the Node IDs on the HA group and the Survivable Server
- use the Application Node ID for trunk registration

Aligned Node ID assignment

The following table shows the aligned Node ID assignment for the sample HS system.

Table 31
Node ID configuration

HA group/site/IP Phone	Signaling Server applications	Node ID	Call Server Route Data Block	
			ROUT	NODEID
HA group A1	SIP Signaling Gateway External	1000	0	1000
	SIP Signaling Gateway Internal	1001	1	1001
	Signaling Server LTPS	1008	N/A	
Belleville Survivable Server	SIP Signaling Gateway + LTPS	1001	1	1001 (see Note 1.)
Belleville SIP Media Gateway Controller	SIP Signaling Gateway	9000	1	9000
Belleville IP Phone	N/A	100	N/A	

Copyright © 2010 Nortel Networks. All Rights Reserved.

HA group/site/IP Phone	Signaling Server applications	Node ID	Call Server Route Data Block	
			ROUT	NODEID
Ottawa Survivable Server	SIP Signaling Gateway + LTPS	1001	1	1001 (see Note 1.)
Ottawa SIP Media Gateway Controller	SIP Signaling Gateway	9000	1	9000
Ottawa IP Phones	N/A	100	N/A	
HA group A2	SIP Signaling Gateway External	2000	0	2000
	SIP Signaling Gateway Internal	2001	1	2001
	Signaling Server LTPS	2008	N/A	
Toronto Survivable Server	SIP Signaling Gateway + LTPS	2001	1	2001 (see Note 1.)
Toronto SIP Media Gateway Controller	SIP Signaling Gateway	9000	1	9000
Toronto IP Phones	N/A	200	N/A	
HA group B1	SIP Signaling Gateway External	3000	0	3000
	SIP Signaling Gateway Internal	3001	1	3001
	Signaling Server LTPS	3008	N/A	
Galway Survivable Server	SIP Signaling Gateway + LTPS	3001	1	3001
Galway SIP Media Gateway Controller	SIP Signaling Gateway	9000	1	9000
Galway IP Phones	N/A	300	N/A	
Belgium Survivable Server	SIP Signaling Gateway + LTPS	3001	1	3001 (see Note 1.)
Belgium IP Phones	N/A	300	N/A	
Note 1: NODEID in customer Route Data Block is configured at HA Call Server and replicated to the Survivable Server.				

The Node ID assigned to the Survivable Server is the same as the Node ID for the HA group SIP Signaling Gateway. The SIP Signaling Gateway Internal is registered to the internal NRS. The Survivable Server receives the replicated database from the HA Call Server and therefore has the same route and trunk configuration as the HA Call Server. Configuring the

Copyright © 2010 Nortel Networks. All Rights Reserved.

Node ID at the Survivable Server the same as the SIP Signaling Gateway Internal ensures that SIP routes and trunks used for private routing remain in operation when the Survivable Server enters survival mode.

All IP Phones in an HS system are configured with a three-digit Node ID. For example, IP Phones in HA group A1 at the Belleville and Ottawa sites are configured with Node ID 100. The Relax Node ID checking feature matches only a portion of the Node ID for a phone to register to the LTPS. All IP Phones in Belleville and Ottawa are configured with Node ID 100 and therefore can register to the LTPS at HA group A1 (Node ID 1008) in normal mode. In Survival mode, the same IP phones can register to the LTPS running on the Survivable Server (Node ID 1001).

Node ID assignment using Application Node ID

When you use the Application Node ID, the Node IDs configured for the SIP Signaling Gateway at the HA group need not be the same as the Node ID configured for the Survivable Server. The following table shows an example of Application Node ID configuration and the Node ID assignment.

Table 32
Node ID assignment using Application Node ID

HA group/site/ IP Phone	Signaling Server applications	Node ID	Application Node ID	Call Server Route Data Block	
				ROUT	NODEID
HA group A1	SIP Signaling Gateway External	1200	5000	0	5000
	SIP Signaling Gateway Internal	1201	5001	1	5001
	Signaling Server LTPS	1008	N/A	N/A	
Belleville Survivable Server	SIP Signaling Gateway + LTPS	1006	5001	1	5001 (See Note 1.)
Belleville SIP Media Gateway Controller	SIP Signaling Gateway	9000	9000	1	9000
Belleville IP Phone	N/A	100		N/A	
Ottawa Survivable Server	SIP Signaling Gateway + LTPS	1007	5001	1	5001 (See Note 1.)

Copyright © 2010 Nortel Networks. All Rights Reserved.

Ottawa SIP Media Gateway Controller	SIP Signaling Gateway	9001	9001	1	9001
Ottawa IP Phone	N/A	100	N/A		
Note 1: NODEID in customer Route Data Block is configured at HA Call Server and replicated to the Survivable Server.					

The Route Data Block (RDB) at the HA Call Server is configured with a NODEID that matches the Application Node ID. For trunk registration, the Application Node ID is used instead of the Node ID. In the previous table, the Application Node ID of the SIP Signaling Gateway at the HA group and all the Survivable Servers are configured to be the same as the NODEID configured at the RDB for the HA Call Server. The Node IDs at the SIP Signaling Gateway no longer need to match the NODEID at the RDB. Application Node ID is configured from Element Manager during the SIP Gateway configuration. If Application Node ID is not configured, then the SIP Signaling Gateway Node ID is used to match the NODEID in the RDB during trunk registration.

IP Phone redirection

IP Phones are configured to register to the Terminal Proxy Server (TPS) in the HA group in normal mode but fall back to register to the TPS in the Survivable Server in Survival mode. In normal mode, the phones attempt to register to the Survivable Server but are redirected to the TPS in the HA group. For a system that is not configured with Zone Based Dialing (ZBD), the Survivable Server generates a Network User ID (NUID) for each IP Phone where the NUID = (AC1 or AC2) + HLOC + DN. For a system configured with ZBD, the Survivable Server generates a Network User ID (NUID) for each IP Phone where the NUID = (AC1 or AC2) + DN.

When the IP Phone A (3432000) in Belleville registers to the Survivable Server, a NUID = 6 + 3432000 is generated for the phone. 6 = AC 2 for the Belleville numzone and 3432000 is the seven-digit DN. After the phone is redirected, the phone displays User:63432000.

Emergency Service Access configuration

The values in the ZFDP table are used to configure the Emergency Service DN for a site. Multiple ESDNs in one ZFDP table support sites where there are more than one ESDN. There is a separate ZFDP table for each numzone so each site can have a separate ESDN. The following table shows a North American example of an ESDN configuration using the ZFDP table.

Copyright © 2010 Nortel Networks. All Rights Reserved.

Table 33
ZFDP configuration for ESDN: North America

Matching digits	Type	Replacement digits	Description
911	ESDN	911	Emergency number

The following table shows a European example of an ESDN configuration using the ZFDP table.

Table 34
ZFDP configuration for ESDN: Europe

Matching digits	Type	Replacement digits	Description
112	ESDN	911	General Emergency number
101	ESDN	912	Police
100	ESDN	913	Ambulance/Fire Brigade

In the North American example, the replacement digits are configured the same as the dialed or matching digits. For example, when a user dials an ESDN, the number is not modified by the Zone Based Dialing (ZBD) feature and is routed to the corresponding ESDN entry in the ESA block configured in LD 24.

In the European example, the replacement digits are configured to defined internal ESDN numbers and therefore the number is converted by the ZBD feature before being routed to the corresponding ESDN entries in the ESA block. An HS system (outside of North America) can include multiple countries with different emergency numbers that a user can dial. The HS system, therefore, can support up to 16 ESDN entries. By using the ZFDP table, one ESDN entry is required for each type of Emergency number rather than the actual dialed number. Therefore, an HS system can support more than 16 different emergency numbers. The ZFDP configuration table, as shown in Table 34 "ZFDP configuration for ESDN: Europe " (page 100) shows the three different emergency numbers that are used in Belgium. The replacement digits 911, 912, and 913 are three categories of emergency numbers that any site in the HS system can use. The following table shows the ESDN configuration for a site located in Galway, Ireland.

Table 35
ZFDP configuration for ESDN: Galway, Ireland

Matching digits	Type	Replacement digits	Description
112	ESDN	911	General Emergency number
999	ESDN	911	General Emergency number

Copyright © 2010 Nortel Networks. All Rights Reserved.

In the previous table, the internal ESDN number are not the numbers that the user dials.

Example: LD 24 ESDN configuration for Belgium

The following shows an example configuration using LD 24 ESDN for the Belgium site.

```
REQ PRT
TYPE ESA
CUST 0
ENTR 0
ESDN 911
RLI 90
DDGT 112?
MISDIAL_PREVENTION YES
ENTR 1
ESDN 912
RLI 90
DDGT 101?
MISDIAL_PREVENTION YES
ENTR 2
ESDN 913
RLI 90
DDGT 100?
MISDIAL_PREVENTION YES
```

In the previous example, the RLI is not used to route IP Phones. The ERL defined in LD 117 is used instead.

For a Survivable SIP Media Gateway site, emergency calls from IP Phones must be routed to the SIP Media Gateway Controller. The SIP Media Gateway Controller routes the call to the PSTN. Routing emergency calls is similar to routing normal calls to the SIP Media Gateway Controller. The RLI and DMI that are configured for the ERL must add the same TSC prefix (numzone + 9000) to the dialed digits. Source-based routing is used because any call from an IP Phone at a site must be routed to the SIP Media Gateway Controller at the same site and the DMI is configured with INST = P9000.

After the call is routed to the Survivable SIP Media Gateway, the SIP Media Gateway Controller strips the TSC prefix. The number must then be converted back to the number dialed. For example, the following SPN and RLI/DMI entries are required for a site in Belgium, as shown in the following table.

Copyright © 2010 Nortel Networks. All Rights Reserved.

Table 36
Example: SPN and RLI/DMI entries at the Belgium site

SPN	RLI entry	LTER	Route	DMI	Description
911	0	No	PRI	DEL = 3 INST = 112	General Emergency number
912	0	No	PRI	DEL = 3 INST = 101	Police
913	0	No	PRI	DEL = 3 INST = 110	Ambulance/Fire Brigade

No ZFDP conversion is required in North America because the dialed digits are not modified. Enabling the Misdial Prevention feature is recommended.

NRS considerations for migration from multiple CS 1000E systems to a CS 1000E HS system

The following example shows the configuration changes required for the external and internal NRS during migration from existing Communication Server 1000E systems to a Communication Server 1000E HS system.

Copyright © 2010 Nortel Networks. All Rights Reserved.

Figure 16
NRS considerations—figure 1

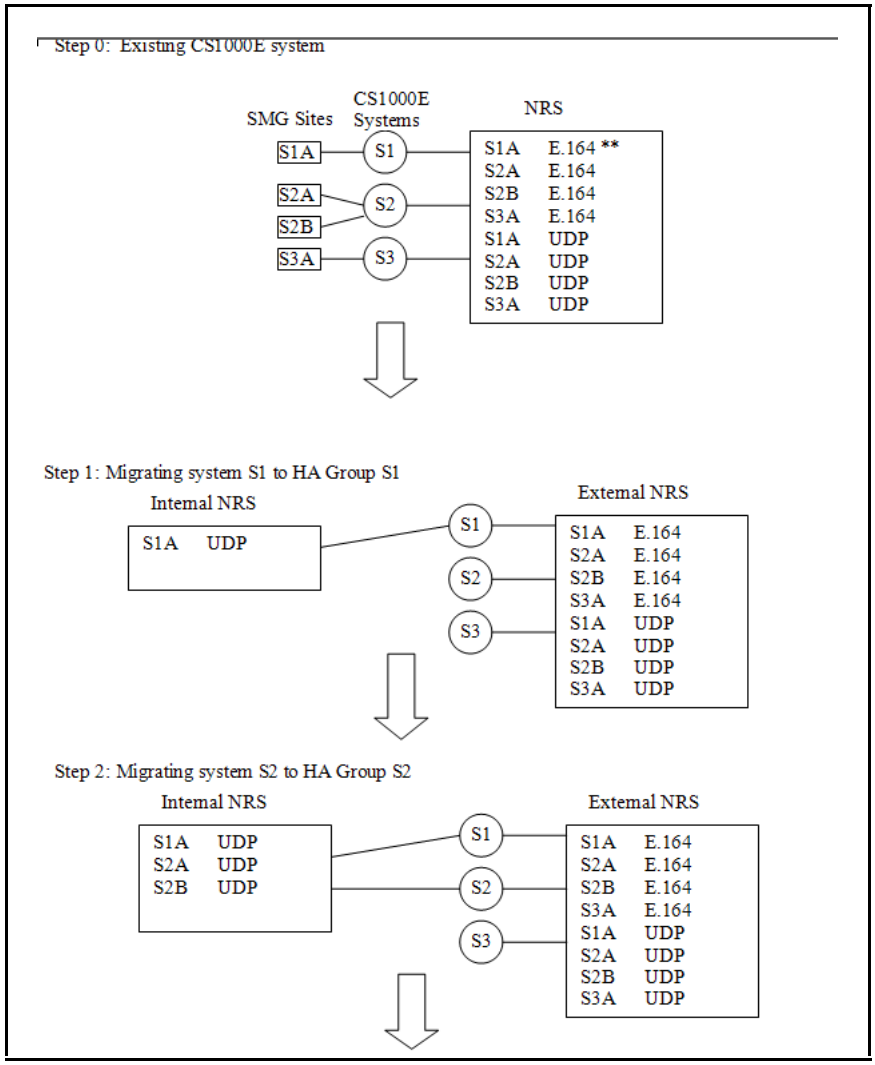

Copyright © 2010 Nortel Networks. All Rights Reserved.

Figure 17
NRS consideration—figure 2

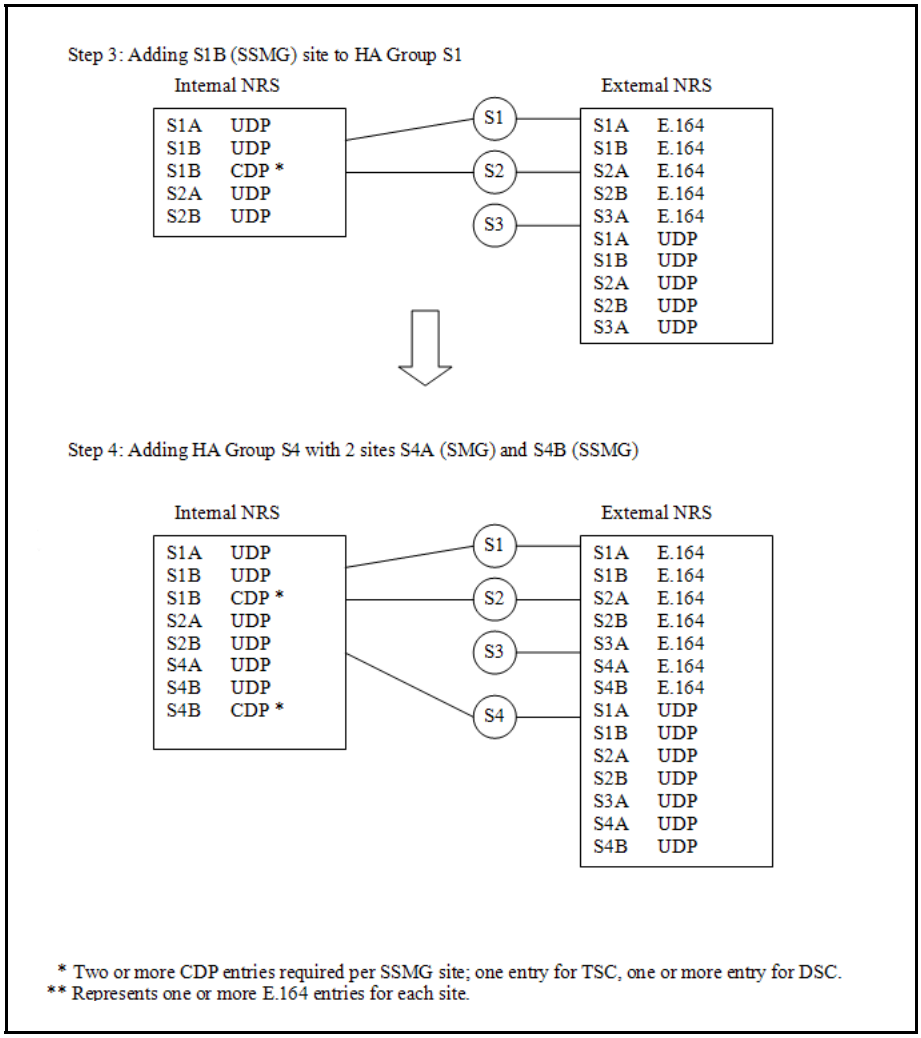

In the previous figure, the existing network consists of three Communication Server 1000E systems: S1, S2 and S3. S1 has one SMG site—S1A; S2 has 2 SMG sites—S2A and S2B; and S3 has one SMG site—S3A. The existing NRS system has E.164 and UDP routes for all three systems. When you migrate the system to an HS system, the existing NRS becomes the external NRS in an HS system. A new NRS is added as the internal NRS. For small deployment, a separate internal NRS is not needed and new internal routes are added to the existing NRS.

- Step 1 shows the migration of system S1 to an HS system where it becomes HA group S1. The existing NRS (external NRS) does not require any changes. For the internal NRS, a UDP route (S1A UDP) is

Copyright © 2010 Nortel Networks. All Rights Reserved.

configured for the LOC or numzone prefix for site S1A. The same LOC entry is already in the external NRS.

- Step 2 shows the migration of system S2 to the HS system. The LOC entries for both sites S2A and S2B are added to the internal NRS for HA group S2. At this point, calls between HA group S1 and HA group S2 are routed using the internal NRS. The LOC entries in the external NRS are used to route UDP calls originating from outside the HS system.
- Step 3 shows the addition of a Survivable SIP Media Gateway site (S1B) with a new numzone to HA group S1. In this case, a LOC entry (S1B UDP) is configured in the internal NRS. In addition, CDP routes are added in the internal NRS for routing between HA group S1 and Survivable SIP Media Gateway site S1B.

  For the external NRS, a LOC entry (S1B UDP) is added for routing calls from outside the HS system destined to site S1B. In addition, E.164 routes are added to the external NRS for on-net and off-net E.164 numbers to site S1B.
- Step 4 shows the inclusion of a new HA group (S4) to the HS system. CDP and UDP entries are added to the internal NRS. UDP and E.164 entries are added to the external NRS.

In the previous figure, system S3 has not migrated to the HS system so it remains as a Communication Server 1000E peer system outside the HS system.

Route List Block configuration considerations for system expansion

Route List Block (RLB) configurations for LOCs and SPN can have sequential entries starting from Entry 0. However, to avoid re-configuring the existing entries in an RLB when adding new routes or new preferred gateways, RLB can be configured in ranges with unused entries between these ranges for future expansion.

The following table shows an example of an RLB configuration for LOC entries.

Copyright © 2010 Nortel Networks. All Rights Reserved.

Table 37
RLB configuration for LOC entries

LOC	RLI entry	LTER	CONA	DMI	Route	Description
xyz	0	Yes	Yes	CTYPE = CDP	N/A	Used for Local Termination
	1	No	N/A	CTYPE = LOC	SIP route 0	SIP route 0 to internal NRS
	2	No	N/A	CTYPE = LOC	SIP route 1	SIP route 1 to internal NRS
	3 : 10	N/A	N/A	N/A	N/A	Unconfigured entries, reserved for future routes
	11	No	N/A	INST = P9000 CTYPE = CDP	SIP route 0	SIP route 0 to internal NRS
	12	No	N/A	INST = P9000 CTYPE = CDP	SIP route 1	SIP route 1 to internal NRS
	13 : 20	N/A	N/A	N/A	N/A	Unconfigured entries
	21	No	N/A	CTYPE = INTL	PRI route	PRI route 0 for SMG1
	22 : 25	N/A	N/A	N/A	N/A	Unconfigured entries, reserved for future routes
	26	No	N/A	N/A	N/A	PRI route 0 for SMG2
	27 : 30	N/A	N/A	N/A	N/A	Unconfigured entries, reserved for future routes
	31	No	N/A	CTYPE = INTL	PRI route	PRI route 0 for SMG3
	32 : 63	N/A	N/A	N/A	N/A	Unconfigured entries, reserved for future routes

In the previous table, blank entries are available to be used if more SIP or PRI routes are required for capacity expansion in the future. The RLI can have up to 64 entries, therefore, there is a limit to the number of PRI routes that can be configured in the LOC entry.

Copyright © 2010 Nortel Networks. All Rights Reserved.

Table 38
RLB configuration for SPN entries

SPN	RLI entry	LTER	CONA	DMI	Description
abcd	0	Yes	Yes	INST = 9000x CTYPE = CDP	Used for routing through TSC
	1	Yes	Yes	INST = 9000x CTYPE = CDP	Used for routing through TSC
	2	Yes	Yes	INST = 9000x CTYPE = CDP	Used for routing through TSC
	3 : 10	N/A	N/A	N/A	Unconfigured entries reserved for future HA groups
	11	No	N/A	INST = AAA900 0 CTYPE = CDP	Used for matching Media Gateway Routing TSC to route to the preferred gateway AAA
	12	No	N/A	INST = BBB900 0 CTYPE = CDP	Used for matching Media Gateway Routing TSC to route to the preferred gateway BBB
	13	No	N/A	INST = CCC900 0 CTYPE = CDP	Used for matching Media Gateway Routing TSC to route to the preferred gateway CCC
	14 : 62	N/A	N/A	N/A	Unconfigured entries reserved for future preferred gateways
	63	Yes	No	INST = P9000	Fall back route to use local gateway

In the previous table, blank entries 3 to 10 are available for use if more HA groups are added in the future. Blank entries 14 to 62 are reserved for preferred gateways for future TEHO routing. The RLI can have up to 64 entries, therefore, there is a limit to the number of preferred gateways that can be configured in the SPN entry.

Routing loop prevention for Survivable SIP Media Gateway

All calls that are not locally terminated and originated from TDM devices at the Survivable SIP Media Gateway are routed to the corresponding HA Call Server using Vacant Number Routing (VNR). When using VNR, there are potential looping scenarios where a call is routed to the Survivable SIP Media Gateway and cannot locally terminate. In this case, the Survivable SIP Media Gateway reroutes the call back using VNR to the corresponding HA Call Server. For example, a loop scenario occurs when an IP user in Belleville incorrectly dials 5010 where 5010 is not a configured DN. The number is internally converted to 3435010. This number matches the DSC 3435 in the HA Call Server A1 which routes the call to the Belleville Survivable SIP Media Gateway. However, the DN 3435010 does not exist in the Belleville Survivable SIP Media Gateway so it cannot locally

Copyright © 2010 Nortel Networks. All Rights Reserved.

terminate. Because VNR is enabled, the Belleville Survivable SIP Media Gateway routes the call back to the internal NRS which, in turn, tandems the call back to HA group A1. To prevent this type of looping scenario, trunk access restriction using TARG/TGAR is used.

In the Figure 8 "Sample HS system configuration" (page 54), ROUT 1 is the SIP route configured at the Belleville Survivable SIP Media Gateway to route to the internal NRS. The TARG and TGAR configuration for the Belleville Survivable SIP Media Gateway is as follows:

- SIP ROUT 1 is configured with TARG = 2
- SIP Trunks for ROUT 1 are configured with TGAR = 2
- TDM phones and trunks are configured with default TGAR = 1

TARG = 2 for SIP ROUT 1 means that any call from a trunk or phone is configured with TGAR = 2 cannot access any trunk on this route. Because the SIP Trunks for ROUT 1 are configured with TGAR = 2, any calls originating from these trunks are not allowed to be routed back to SIP ROUT 1. With this configuration, any incoming trunk calls from HA group A1 to the Belleville Survivable SIP Media Gateway are not allowed to tandem back to HA group A1 and a routing loop is prevented.

With this trunk access restriction configuration at a Survivable SIP Media Gateway, features requiring a call to be routed back out to the network, such as, Call Transfer and Call Forward, do not work for the TDM phones on the Survivable SIP Media Gateway.

Copyright © 2010 Nortel Networks. All Rights Reserved.

HS system configuration workflow

This chapter describes the high level workflow for configuring a High Scalability (HS) system.

Navigation

- “High Availability Call Server configuration” (page 109)
- “Configuration of the Survivable Servers ” (page 110)
- “SIP Media Gateway Controller configuration” (page 111)
- “Network Routing Service configuration” (page 112)

High Availability Call Server configuration

Common data configuration for a High Availability Call Server.

1. Configure Customer Data Block.
2. Activate Zone Based Dialing (ZBD) in customer data.
3. Create ESN Data Block.
4. Create Network Control Block.
5. Configure Numbering Zones.
   a. Create numzones.
   b. Configure ZFDP parameters.
6. Configure bandwidth zones.
7. Configure virtual superloops.
8. Configure SIP Virtual Routes and Trunks.
   a. Enable ISDN in customer data.
   b. Configure Virtual D-Channel.
   c. Configure SIP Routes.
   d. Configure IPTI Trunks.

Copyright © 2010 Nortel Networks. All Rights Reserved.

9. Configure LOC entries.
   a. Configure DMI.
   b. Configure RLI.
   c. Configure LOC.
10. Configure SPN entries.
   a. Configure DMI.
   b. Configure RLI.
11. Configure ESA.
   a. Configure DMI.
   b. Configure RLI.
   c. Configure ESDN Entries.
   d. Configure ERL.

Unique data configuration for a High Availability Call Server.

1. Configure CDP steering codes.
   a. Configure DMI.
   b. Configure RLI.
   c. Configure DSC.
   d. Configure TSC.
2. Configure CLID tables.
3. Configure IP Phones.
4. Configure Backup Rules for Database Replication.
5. Configure TPS and SIP Gateway.
   a. Configure TPS and H.323 for IP Phone redirection.
   b. Configure SIP Signaling Gateway (external), Primary TLAN IP to external NRS.
   c. Configure SIP Signaling Gateway (internal), Primary TLAN IP to internal NRS.

Configuration of the Survivable Servers

The Survivable Servers are used in the Survivable Media Gateway and Survivable SIP Media Gateway.

1. Configure Backup Rules and Schedules for Database Replication.
2. Configure TPS and SIP Gateway.

Copyright © 2010 Nortel Networks. All Rights Reserved.

a. Configure TPS and H.323 for IP Phone redirection.

b. Configure SIP Signaling Gateway with Primary TLAN IP pointing to the internal NRS.

c. If the Survivable Server is used in the Survivable SIP Media Gateway, configure the Secondary TLAN IP of the SIP Signaling Gateway to point to the SIP Media Gateway Controller.

SIP Media Gateway Controller configuration

1. Configure Customer Data Block.
2. Activate Zone Based Dialing (ZBD) in customer data.
3. Create ESN Data Block.
4. Create Network Control Block.
5. Configure Numbering Zones.
   a. Create numzones.
   b. Configure ZFDP parameters.
6. Configure bandwidth zones.
7. Configure virtual superloops.
8. Configure SIP Virtual Routes and Trunks.
   a. Enable ISDN in customer data.
   b. Configure Virtual D-Channel.
   c. Configure SIP Routes.

      Note: Configure TARG for loop prevention.

   d. Configure IPTI Trunks.

      Note: Configure TGAR for loop prevention.

9. Configure SPN entries.
   a. Configure DMI.
   b. Configure RLI.
10. Configure Trunk Steering Codes.
    a. Configure DMI.
    b. Configure RLI.
    c. Configure TSC.
11. Configure VNR.

Copyright © 2010 Nortel Networks. All Rights Reserved.

a. Configure DMI.
b. Configure RLI.

12. Configure ESA.
    a. Configure DMI.
    b. Configure RLI.
    c. Configure ESDN entries.
13. Configure IPMG Superloop.
14. Configure VGW Channels.
15. Configure tones and conference loops.
16. Configure PRI Routes and Trunks.
    a. Configure DCH.
    b. Configure DID Routes and Trunks.
    c. Configure IDC.
    d. Enable DITI in customer data.
17. Configure CLID tables.
18. Configure TDM Phones.
19. Configure SIP Gateway.
    a. Configure SIP Signaling Gateway with the Primary TLAN IP pointing to the internal NRS and the Secondary TLAN IP pointing to the Survivable Server.

Network Routing Service configuration

The following section provides configuration information for an external and internal NRS.

External NRS configuration

1. Configure Service, L1 and L0 domains.
2. Configure Endpoints.
3. Configure Routes.
4. Configure collaborative NRS (if implemented).

Copyright © 2010 Nortel Networks. All Rights Reserved.

Internal NRS configuration

1. Configure Service, L1 and L0 domains.
2. Configure Endpoints.

   Note: SIP Media Gateway Controller is configured to tandem to HA group.

3. Enable NCS for IP Phone redirection.
4. Configure Routes.

Copyright © 2010 Nortel Networks. All Rights Reserved.

Copyright © 2010 Nortel Networks. All Rights Reserved.

Dial plan call flows

This chapters describes various call flow combinations in a High Scalability (HS) system dial plan design.

Navigation

- "Private number calls between numzones in the same HA group" (page 115)
- "On-net number calls between HA groups" (page 116)
- "On-net number calls from HA group to a Survivable SIP Media Gateway in a different HA group" (page 116)

Private number calls between numzones in the same HA group

The following figures show the routing for an interzone call flow.

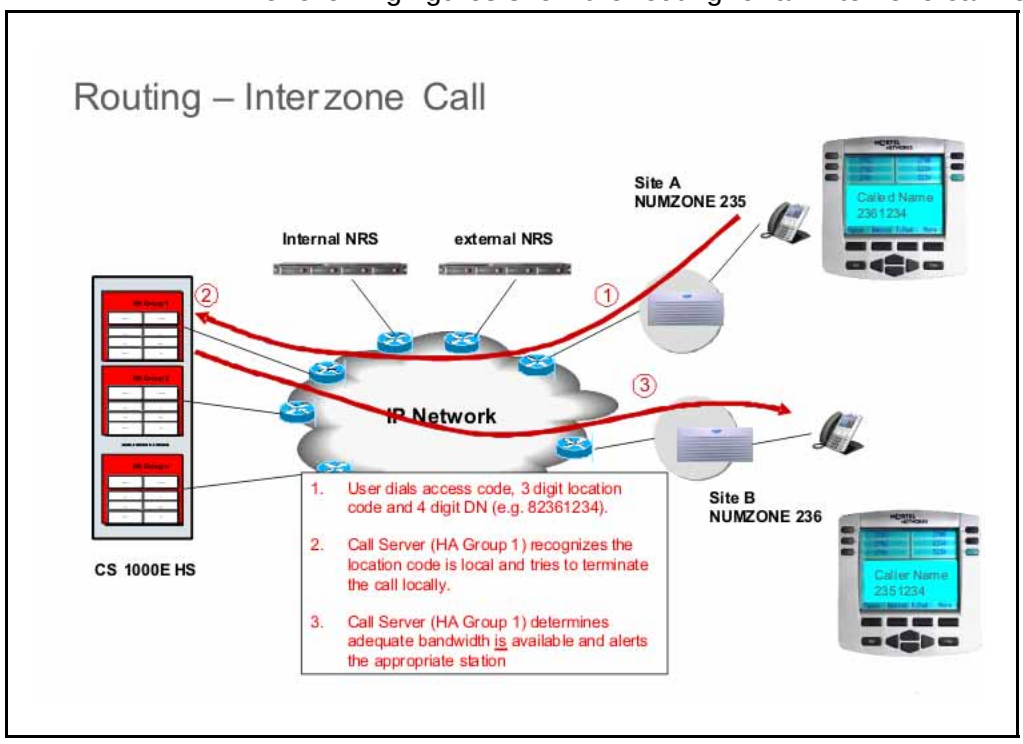

Copyright © 2010 Nortel Networks. All Rights Reserved.

On-net number calls between HA groups

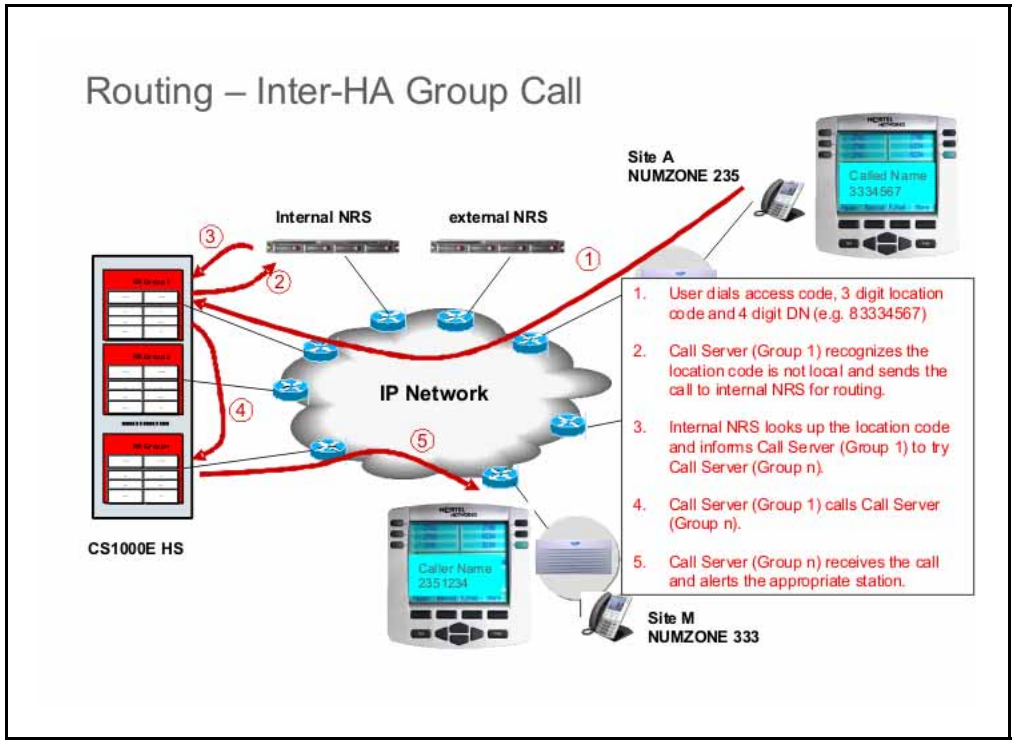

On-net number calls from HA group to a Survivable SIP Media Gateway in a different HA group

Copyright © 2010 Nortel Networks. All Rights Reserved.

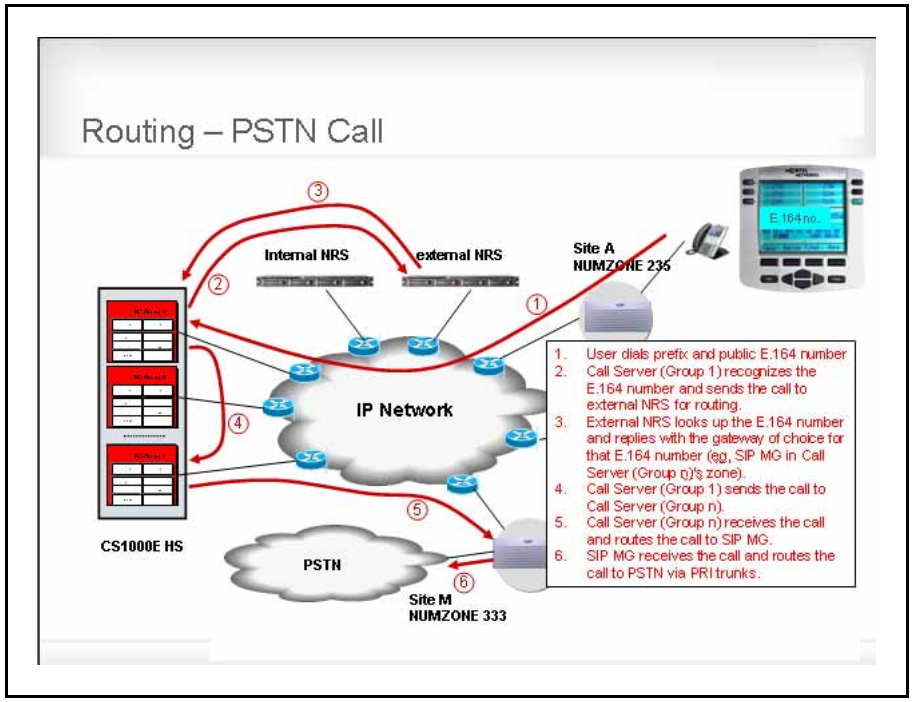

Copyright © 2010 Nortel Networks. All Rights Reserved.

Copyright © 2010 Nortel Networks. All Rights Reserved.

Configuration Details

This appendix describes the configuration details required for the Primary Call Server co-residency.

Navigation

- “Numzone and bandwidth zone assignments” (page 119)
- Table 41 "High Scalability system HS-A DN assignment table" (page 120)
- “CLID configuration” (page 121)
- “High Scalability Access Codes” (page 121)
- “NET_DATA AC1 and AC2 configuration” (page 122)
- “NRS routes” (page 122)
- “SPN configuration ” (page 127)
- “SPN configuration for HS-B” (page 131)
- “LOC configuration” (page 133)
- “Distant Steering Code” (page 138)
- “Trunk Steering Code” (page 139)
- “ESA configuration” (page 139)
- “Unique data for each HA group” (page 173)

Numzone and bandwidth zone assignments

The following tables show the High Scalability system for HS-A and HS-B zone assignment.

Copyright © 2010 Nortel Networks. All Rights Reserved.

Table 39
High Scalability system HS-A zone assignment

Site		Numzone	Bandwidth zone (Phones)	Bandwidth zone (VTRK)	Bandwidth zone (MGC VGW)	Numzone prefix
HA group A1	Belleville	343	343	1	N/A	343
	Ottawa	39	39		N/A	39
	Boston	248	248		248	39
HA group A2	Toronto	333	333	1	N/A	333
	Richardson	444	444		444	444

Table 40
High Scalability system HS-B table zone assignment

Site		Numzone	Bandwidth zo ne (Phones)	Bandwidth zone (VTRK)	Bandwidth zone (MGC VGW)	Numzone prefix
HA group B1	Galway	570	570	1	N/A	570
	Belgium	574	574		574	574

IP Phone DN assignment

The following table shows the IP Phones configured at the HA Call Server pair. The Survivable SIP Media Gateway TDM phones are configured on the SIP Media Gateway Controller.

Table 41
High Scalability system HS-A DN assignment table

Site		DN	Area code	Number
HA group A1	Belleville	34342000	613	9612000
		34320001	613	9612001
	Ottawa	3935000	613	7635000
		3955001	613	7635001
	Boston	2482000	978	6702000
		2485005	978	6705005
HA group A2	Toronto	3334000	905	8634000
		3334001	905	8634001
	Richardson	4442000	972	6842000
		4445005	972	6845005

Copyright © 2010 Nortel Networks. All Rights Reserved.

Table 42
High Scalability system HS-B DN assignment table

Site		DN	Area code	Number
HA group B1	Galway	5707000	91	737000
		5707001	91	737002
	Belgium	5746000	2	556000
		5746001	2	556001
		5745005	2	555005

CLID configuration

The following tables show the CLID configuration for an HS system.

Table 43
High Scalability system HS-A CLID configuration table

Site		HNTN	HLCL
HS group A1	Belleville	613	961
		613	967
	Ottawa	613	76
	Boston	978	670
HS group A2	Toronto	905	863
	Richardson	972	684

Table 44
HS-B CLID configuration table

Site		Entry	HNTN	HLCL
HS group B1	Galway	200	91	73
	Belgium	201	2	55

High Scalability Access Codes

The following tables show the High Scalability Access Codes for North America (HS A) and Europe (HS B).

Table 45
HS-A Access Code

Site		Access Code ZFDP				System Access code	
		LOC	NPA	NXX	INTL	AC1	AC2
HA group A1	Belleville	6	61, 9	N/A	6011	99	66
	Ottawa	6	61, 9	N/A	6011		
	Boston	6	61, 9	N/A	6011		

Copyright © 2010 Nortel Networks. All Rights Reserved.

Site		Access Code ZFDP				System Access code	
		LOC	NPA	NXX	INTL	AC1	AC2
HA group A2	Toronto	6	61, 9	N/A	6011	99	66
	Richardson	6	61	9	6011		

Table 46
High Scalability system HS-B Access Code

Site		Access Code ZFDP				System Access Code	
		LOC	REG1	REG2	INTL	AC1	AC2
HA group B1	Galway	6	00	9	000	99	66
	Belleville	6	00	9	000		

NET_DATA AC1 and AC2 configuration

AC1 and AC2 configuration is the same for HS-A and HS-B, as shown in the following table.

Table 47
AC1 and AC2 configuration

Access Code	Type
AC1	INTL NPA SPN NXX
AC2	LOC

NRS routes

The following tables show the NRS routes for HS-A and HS-B internal and HS-A external NRS.

HS-A Internal NRS

Table 48
High Scalability system HS-A Internal NRS

Route Entry	Destination	Cost	Type	Domain
343	HA group A1 SS-SIPGW Internal (DC1)	1	Private Level 1	L1
	HA group A1 SS-SIPGW Internal (DC2)	2	Private Level 1	L1
	HA group A1 Belleville SS_SIP (for Failsafe only)	3	Private Level 1	L1

Copyright © 2010 Nortel Networks. All Rights Reserved.

Route Entry	Destination	Cost	Type	Domain
3435005	HA group A1 Belleville SIPGW fax 1	1	Private Level 0	L1.L0A1
3435006	HA group A1 Belleville SIPGW fax 2	1	Private Level 0	L1.L0A1
3439000	HA group A1 Belleville SIPGW	1	Private Level 0	L1.L0A1
39	HA group A1 SS-SIP (DC1)	1	Private Level 1	L1
	HA group A1 SS-SIP (DC2)	2	Private Level 1	L1
	HA group A1 Toronto Survivable SS-SIP (for Failsafe only)	3	Private Level 1	L1
3935005	HA group A1 Ottawa SIPGW Fax	1	Private Level 0	L1.L0A1
399000	HA group A1 Ottawa SIPGW	1	Private Special	L1.L0A1
248	HA group A2 SS-SIP (DC1)	1	Private Level 1	L1
	HA group A2 SS-SIP (DC2)	2	Private Level 1	L1
	HA group A2 Toronto Survivable SS-SIP (for Failsafe only)	3	Private Level 1	L1
3335005	HA group A2 Toronto SIPGW Fax	1	Private Level 0	L1.L0A1
3339000	HA group A2 Toronto SIPGW	1	Private Level 0	L1.L0A1

Copyright © 2010 Nortel Networks. All Rights Reserved.

Route Entry	Destination	Cost	Type	Domain
444	HA group A2 SS-SIP (DC1)	1	Private Level 1	L1
	HA group A2 SS-SIP (DC2)	2	Private Level 1	L1
	HA group A2 Richardson Survivable SS-SIP (for Failsafe only)	3	Private Level 1	L1

HS-B Internal NRS

Table 49
High Scalability system HS-B Internal NRS

Route Entry	Destination	Cost	Type	Domain
570	HA group B1 SS-SIP (DC1)	1	Private Level 1	L1
	HA group B1 SS-SIP (DC2)	2	Private Level 1	L1
	HA group B1 Galway Survivable SS-SIP (for Failsafe only)	3	Private Level 1	L1
5705005	HA group B1 Toronto SIPGW fax	1	Private Level 0	L1.L0B1
5709000	HA group B1 Galway SIPGW	1	Private Level 0	L1.L0B1
574	HA group B1 SS-SIP (DC1)	1	Private Level 1	L1
	HA group B1 SS-SIP (DC2)	2	Private Level 1	L1
	HA group B1 Belgium SS-SIP (for Failsafe only)	3	Private Level 1	L1

Copyright © 2010 Nortel Networks. All Rights Reserved.

High Scalability system HS-A External NRS

Table 50
HS-A TEHO routing

Route Entry	Destination	Cost	Type	Description
1	Ottawa SIP Trunk/SBC	1	E.164	Any calls in North America except those listed below.
	Richardson SIP Trunk/SBC	2	E.164	
1613	HA group A1 SS-SIP (DC1)	1	E.164	Preferred Gateways in HA group A1
	Ottawa SIP Trunk/SBC	2	E.164	
	Richardson SIP Trunk/SBC	3	E.164	
1905	HA group A2 SS-SIP (DC1)	1	E.164	Preferred Gateways in HA group A2
	Toronto SIP Trunk/SBC	2	E.164	
	Ottawa SIP Trunk/SBC	3	E.164	
1416	HA group A2 SS-SIP (DC1)	1	E.164	Preferred Gateways in HA group A2
	Richardson SIP Trunk/SBC	2	E.164	
	Ottawa SIP Trunk/SBC	3	E.164	
1212	Ottawa SIP Trunk/SBC	1	E.164	No free calling from any Gateways. Route only to SBCs.
	Richardson SIP Trunk/SBC	2	E.164	
343	HA group A1 SS-SIP (DC1)	1	Private Level 1	HA group A1 Belleville
16139612	HA group A1 SS-SIP (DC1)	1	E.164	HA group A1 Belleville
16139675	HA group A1 SS-SIP (DC1)	1	E.164	HA group A1 Belleville
16139660100	HA group A1 SS-SIP (DC1)	1	E.164	HA group A1 Belleville
39	HA group A1 SS-SIP (DC1)	1	Private Level 1	HA group A1 Ottawa

Copyright © 2010 Nortel Networks. All Rights Reserved.

Route Entry	Destination	Cost	Type	Description
1613763	HA group A1 SS-SIP (DC1)	1	E.164	HA group A1 Ottawa
1613765	HA group A1 SS-SIP (DC1)	1	E.164	HA group A1 Ottawa
333	HA group A2 SS-SIP (DC1)	1	Private Level 1	HA group A2 Toronto
1905863	HA group A1 SS-SIP (DC1)	1	E.164	HA group A1 Toronto

Table 51
Source Based Routing (no TEHO)

Route Entry	Destination	Cost	Type	Description
343	HA group A1 SS-SIP (DC1)	1	Private Level 1	HA group A1 Belleville
16139612	HA group A1 SS-SIP (DC1)	1	E.164	HA group A1 Belleville
16139675	HA group A1 SS-SIP (DC1)	1	E.164	HA group A1 Belleville
16139660100	HA group A1 SS-SIP (DC1)	1	E.164	HA group A1 Belleville
39	HA group A1 SS-SIP (DC1)	1	Private Level 1	HA group A1 Ottawa
1613763	HA group A1 SS-SIP (DC1)	1	E.164	HA group A1 Ottawa
1613765	HA group A1 SS-SIP (DC1)	1	E.164	HA group A1 Ottawa
333	HA group A1 SS-SIP (DC1)	1	Private Level 1	HA group A2 Toronto
1905863	HA group A1 SS-SIP (DC1)	1	E.164	HA group A1 Toronto

High Scalability system HS-B External NRS

Table 52
HS-B TEHO routing

Route Entry	Destination	Cost	Type	Description
353	HA group B1 SS-SIP (DC1)	1	E.164	Ireland
	Galway SIP Trunk/SBC	2	E.164	

Copyright © 2010 Nortel Networks. All Rights Reserved.

Route Entry	Destination	Cost	Type	Description
32	HA group B1 SS-SIP (DC1)	1	E.164	Belgium
	Belgium SIP Trunk/SBC	3	E.164	
44	HA group B1 SS-SIP (DC1)	1	E.164	United Kingdom
	Galway SIP Trunk/SBC	2	E.164	
570	HA group B1 SS-SIP (DC1)	1	Private Level 1	HA group B1 Galway
3539173	HA group B1 SS-SIP (DC1)	1	E.164	HA group B1 Galway
574	HA group B1 SS-SIP (DC1)	1	UDP	HA group B1 Belgium
32255	HA group B1 SS-SIP (DC1)	1	E.164	HA group B1 Belgium

Table 53
Source Based Routing (no TEHO)

Route Entry	Destination	Cost	Type	Description
570	HA group B1 SS-SIP (DC1)	1	Private Level 1	HA group B1 Galway
3539173	HA group B1 SS-SIP (DC1)	1	E.164	HA group B1 Galway
574	HA group B1 SS-SIP (DC1)	1	Private Level 1	HA group B1 Belgium
32255	HA group B1 SS-SIP (DC1)	1	E.164	HA group B1 Belgium

SPN configuration

The following tables show the SPN configuration for North America for on-net and off-net E.164 numbers.

SPN configuration for Off-net E.164 numbers

The following table shows the configuration based on TEHO routing.

Copyright © 2010 Nortel Networks. All Rights Reserved.

Table 54
HS-A Configuration based on TEHO routing

SPN	RLI Entry	DMI	Description
1613	Entry = 0 LTER = yes CONA = yes	DE L= 0 INST = 90002 CTYP = UDP	Public number 1-613-xxx-xxxx TEHO preferred gateway in HA group A1. This entry is used for HA group A2 to route number to eNRS. eNRS 1613 E.164: Cost 1: HA group A1 Cost 2: Ottawa SIP SBC Cost 3: Richardson SIP SBC
	Entry = 1 LTER = yes CONA = yes FSNS: Ottawa free areas	DEL = 0 INST = 399000 CTYP = CDP	Public number 1613 xxx-xxxx HA group A1, free calling areas for Ottawa region iNRS 399000 CDP: Cost 1: Ottawa G/W
	Entry = 2 LTER = yes CONA = yes FSNS: Belleville free areas	DEL = 0 INST = 3439000 CTYP = CDP	Public number 1613 xxx-xxxx Free call screening failed, so try destination based routing, first choice Ottawa G/W iNRS 399000 CDP: Cost 1: Ottawa G/W
	Entry = 3 LTER = yes CONA = yes FSNS: None	DEL = 0 INST = 399000 CTYP = CDP	Public number 1613 xxx-xxxx Free call screening failed, so try destination based routing, first choice Ottawa G/W iNRS 399000 CDP: Cost 1: Ottawa G/W
	Entry = 4 LTER = yes CONA = yes FSNS: None	DEL = 0 INST = 3439000 CTYP = CDP	Public number 1613 xxx-xxxx Free call screening failed, so try destination based routing, second choice Belleville G/W iNRS 3439000 CDP: Cost 1: Belleville G/W
	Entry = 5 LTER = yes CONA = no FSNS: None	DEL = 0 INST = P9000 CTYP = CDP	Public number 1613 xxx-xxxx Preferred Gateways failed. Use source based routing using local gateway

Copyright © 2010 Nortel Networks. All Rights Reserved.

SPN	RLI Entry	DMI	Description
1905	Entry = 0 LTER = yes CONA = yes FSNS: None	DEL = 0 INST = 90001 CTYP = CDP	Public number 1905 xxx-xxxx TEHO preferred gateway in Core A2. This entry is used for HA group A1 to route number to eNRS. eNRS 1905 E.164: Cost 1: Core A2 Cost 2: Ottawa SIP SBC Cost 3: Richardson SIP SBC
	Entry = 1 LTER = yes CONA = yes FSNS: None	DEL = 0 INST = 3339000 CTYP = CDP	Public number 1905 xxx-xxxx HA group A2, All 1905 numbers free for TOR region, so no free calling screening required. Destination based routing, first choice TOR G/W iNRS 3339000 CDP: Cost 1: TOR G/W
	Entry = 2 LTER = yes CONA = yes FSNS: None	DEL = 0 INST = P9000 CTYP = CDP	Public number 1905 xxx-xxxx Preferred Gateways failed. Use source based routing using local gateway
1416	Entry = 0 LTER = yes CONA = yes FSNS: None	DEL = 0 INST = 90001 CTYP = CDP	Public number 1416 xxx-xxxx TEHO preferred gateway in HA group A2. This entry is used for Core A1 to route number to eNRS. eNRS 1416 E.164: Cost 1: HA group A2 Cost 2: Ottawa SIP SBC Cost 3: Richardson SIP SBC
	Entry = 1 LTER = yes CONA = yes FSNS: None	DEL = 0 INST = 3339000 CTYP = CDP	Public number 1416 xxx-xxxx HA group A2, All 1416 numbers free for TOR region, so no free calling screening required. Destination based routing, first choice TOR G/W iNRS 3339000 CDP: Cost 1: TOR G/W
	Entry = 2 LTER = yes CONA = yes FSNS: None	DEL = 0 INST = P9000 CTYP = CDP	Public number 1416 xxx-xxxx Preferred Gateways failed. Use source based routing using local gateway
1212	Entry = 0 LTER = yes CONA = yes FSNS: None	DEL = 0 INST = 90001 CTYP = CDP	Public number 1212 xxx-xxxx Preferred route are SIP SBCs This entry is used for HA group A1 to route number to eNRS. eNRS 1212 E.164: Cost 1: Ottawa SIP SBC Cost 2: Richardson SIP SBC
	Entry = 1 LTER = yes CONA = yes FSNS: None	DEL = 0 INST = 90002 CTYP = CDP	Public number 1212 xxx-xxxx Preferred route are SIP SBCs This entry is used for HA group A2 to route number to eNRS. eNRS 1212 E.164: Cost 1: Ottawa SIP SBC Cost 2: Richardson SIP SBC
	Entry = 1 LTER = yes CONA = yes FSNS: None	DEL = 0 INST = P9000 CTYP = CDP	Public number 1212 xxx-xxxx Preferred routes failed. Use source based routing using local gateway

Copyright © 2010 Nortel Networks. All Rights Reserved.

SPN	RLI Entry	DMI	Description
353	Entry = 0 LTER = no ROUT = eNRS	DEL = 0 CTYP = INTL	Public number 353-xx-xxxxxx Collaborative entry in external NRS for HS-B
32	Entry = 0 LTER = no ROUT = eNRS	DEL = 0 CTYP = INTL	Public number 353-xx-xxxxxx Collaborative entry in external NRS for HS-B

Table 55
HS-A configuration based on Source Based routing (no TEHO)

SPN	RLI entry	DMI	Description
1613	Entry = 0 LTER = yes CONA = no FSNS: None	DEL = 0 INST = P9000 CTYP = CDP	Public number 1613 xxx-xxxx Source based routing only using local gateway
1905	Entry = 0 LTER = yes CONA = no FSNS: None	DEL = 0 INST = P9000 CTYP = CDP	Public number 1905 xxx-xxxx Source based routing only using local gateway
1416	Entry = 0 LTER = yes CONA = no FSNS: None	DEL = 0 INST = P9000 CTYP = CDP	Public number 1416 xxx-xxxx Source based routing only using local gateway
1212	Entry = 0 LTER = yes CONA = no FSNS: None	DEL = 0 INST = P9000 CTYP = CDP	Public number 1212 xxx-xxxx Source based routing only using local gateway
353	Entry = 0 LTER = no ROUT = eNRS	DEL = 0 CTYP = INTL	Public number 353-xx-xxxxxx Collaborative entry in external NRS for HS-B
32	Entry = 0 LTER = no ROUT = eNRS	DEL = 0 CTYP = INTL	Public number 353-xx-xxxxxx Collaborative entry in external NRS for HS-B

Table 56
On-net E.164 numbers

SPN-ARRN	RLI entry	DMI	Description
1613-9612	Entry = 0 LTER = yes CONA = no	DEL = 7 INST = 66343 CTYP = LOC	Private number 1-613-961-2xxx DMI changes number to AC2+343-2xxx so call can be processed using LOC entry 343.

Copyright © 2010 Nortel Networks. All Rights Reserved.

SPN-ARRN	RLI entry	DMI	Description
1613-9675	Entry = 0 LTER = yes CONA = no	DEL = 7 INST = 66343 CTYP = LOC	Private number 1-613-967-5xxx DMI changes number to AC2+343-5xxx so call can be processed using LOC entry 343.
1613-9660100	Entry = 0 LTER = yes CONA = no	DEL = 7 INST = 66343 CTYP = LOC	Private number 1-613-966-0100 DMI changes number to AC2+343-0100 so call can be processed using LOC entry 343.
1613-763	Entry = 0 LTER = yes CONA = no	DEL = 6 INST = 6639 CTYP = LOC	Private number 1-613-763-xxxx DMI changes number to AC2+393-xxxx so call can be processed using LOC entry 39.
1613-765	Entry = 0 LTER = yes CONA = no	DEL = 6 INST = 6639 CTYP = LOC	Private number 1-613-765-xxxx DMI changes number to AC2+395-xxxx so call can be processed using LOC entry 39.
1905-863	Entry = 0 LTER = yes CONA = no	DEL = 7 INST = 66333 CTYP = LOC	Private number 1-905-863-xxxx DMI changes number to AC2+333-xxxx so call can be processed using LOC entry 333.

SPN configuration for HS-B

The following tables show the SPN configuration for HS-B.

SPN Configuration for off-net E.164 numbers

Table 57
Configuration based on Tail End Hop Off (TEHO) routing

SPN	RLI Entry	DMI	Description
353	Entry = 0 LTER = yes CONA = yes	DEL = 0 INST = 5709000 CTYP = CDP	Public number 353 xx-xx-xxxx Only one HA group in HS-B, so no routes required for other HA group to route to HA group B1. First entry is route to preferred gateway iNRS 5709000 CDP: Cost 1: Galway G/W

Copyright © 2010 Nortel Networks. All Rights Reserved.

SPN	RLI Entry	DMI	Description
	Entry = 1 LTER = yes CONA = no	DEL = 0 INST = P9000 CTYP = CDP	Public number 353 xx-xx-xxxx Preferred routes failed. Use source based routing using local gateway
32	Entry = 0 LTER = yes CONA = yes	DEL = 0 INST = 5749000 CTYP = CDP	Public number 32 xx-xx-xxxx Only one HA group in HS-B, so no routes required for other HA group to route to HA group B1. First entry is route to preferred gateway TSC 5749000 routes to PRI route for Belgium SMG
	Entry = 1 LTER = yes CONA = no	DEL = 0 INST = P9000 CTYP = CDP	Public number 32 xx-xx-xxxx Preferred routes failed. Use source based routing using local gateway
44	Entry = 0 LTER = yes CONA = yes	DEL = 0 INST = 5709000 CTYP = CDP	Public number 44 xx-xx-xxxx Only one HA group in HS-B, so no routes required for other HA group to route to HA group B1. First entry is route to preferred gateway iNRS 5709000 CDP: Cost 1: Galway G/W
	Entry = 1 LTER = yes CONA = no	DEL = 0 INST = P9000 CTYP = CDP	Public number 44 xx-xx-xxxx Preferred routes failed. Use source based routing using local gateway
1	Entry = 0 LTER = no ROUT = eNRS	DEL = 0 INST = none CTYP = INTL	Public number 1 xxx xxx xxxx Collaborative entry in external NRS for HS-A

Table 58
HS-B on-net E.164 numbers

SPN-ARRN	RLI	Entry	DMI	Description
353-9173	RLI = 200	Entry = 0 LTER = yes	DMI = 200 DEL = 7 INST = 66570 CTYP = LOC	Private number 353-91-73-xxxx DMI changes number to AC2+570-xxxx. Call is processed using LOC entry 570
32-255	RLI =201	Entry = 0 LTER = yes	DMI = 201 DEL = 7 INST = 66574 CTYP = LOC	Private number 32-2-55-xxxx DMI changes number to AC2+574-xxxx. Call is processed using LOC entry 574

Copyright © 2010 Nortel Networks. All Rights Reserved.

Table 59
Configuration based on Source Based Routing (no TEHO)

SPN	RLI entry	DMI	Description
353	Entry = 0 LTER = yes CONA = no	DEL = 0 INST = P9000 CTYP = CDP	Source based routing only using local gateway
32	Entry = 0 LTER = yes CONA = no	DEL = 0 INST = P9000 CTYP = CDP	Source based routing only using local gateway
44	Entry = 0 LTER = yes CONA = no	DEL = 0 INST = P9000 CTYP = CDP	Source based routing only using local gateway
1	Entry = 0 LTER = no ROUT = eNRS	DEL = 0 INST = none CTYP = INTL	Public number 1 xxx xxx xxxx Collaborative entry in external NRS for HS-A

Table 60
HS-B on-net E.164 numbers

SPN-ARRN	RLI entry	DMI	Description
353-9173	Entry = 0 LTER = yes CONA = no	DEL = 0 INST = 66570 CTYP = LOC	Private number 353-91-73-xxxx DMI changes number to AC2+570-xxxx so call can be processed using LOC entry 570
32-255	Entry = 0 LTER = yes CONA = no	DEL = 7 INST = 66574 CTYP = LOC	Private number 32-2-55-xxxx DMI changes number to AC2+574-xxxx so call can be processed using LOC entry 574

LOC configuration

Table 61
LOC configuration for HS-A system

LOC	RLI entry	CNV	DMI
343	Entry = 0 LTER = yes CONA = no	N/A	DEL = 0 CTYP = CDP
	Entry = 1 LTER = no CNV = no ROUT = iNRS	N/A	DEL = 0 CTYP = LOC
	Entry = 2 LTER = no CNV = yes ROUT = iNRS	LDN 16139660100 DID yes MXX yes SAVE 4 OFFC 961	DEL = 0 INST = P9000 CTYP = CDP

Copyright © 2010 Nortel Networks. All Rights Reserved.

LOC	RLI entry	CNV	DMI
		RNGE 2000 3999 OFFC 967 RNGE 5000 5999	
	Entry = 3 LTER = no CNV = yes ROUT = BOS PRI	LDN 16139660100 DID yes MXX yes SAVE 4 OFFC 961 RNGE 2000 3999 OFFC 967 RNGE 5000 5999	DEL = 0 INST = P9000 CTYP = CDP
	Entry = 4 LTER = no CNV = yes ROUT = RICH PRI	LDN 16139660100 DID yes MXX yes SAVE 4 OFFC 961 RNGE 2000 3999 OFFC 967 RNGE 5000 5999	DEL = 0 CTYP = INTL
39	Entry = 0 LTER = yes CONA = yes	N/A	DEL = 0 CTYP = CDP
	Entry = 1 LTER = no CNV = no CONA = iNRS	N/A	DEL = 0 CTYP = LOC
	Entry = 2 LTER = no CNV = yes CONA = iNRS	CNV yes LDN 16137630100 DID yes MXX no SAVE 5 RNGE 30000 39999	DEL = 0 INST = P9000 CTYP = CDP
	Entry = 3 LTER = no CNV = yes ROUT = BOS PRI	CNV yes LDN 16137630100 DID yes MXX no SAVE 5 RNGE 30000 39999	DEL = 0 CTYP = INTL
	Entry = 4 LTER = no CNV = yes ROUT = Rich PRI	CNV yes LDN 16137630100 DID yes MXX no SAVE 5 RNGE 30000 39999	DEL = 0 CTYP = INTL

Copyright © 2010 Nortel Networks. All Rights Reserved.

LOC	RLI entry	CNV	DMI
333	Entry = 0 LTER = yes CONA = yes	N/A	DEL = 0 CTYP = CDP
	Entry = 1 LTER = no CNV = no ROUT = iNRS	N/A	DEL = 0 CTYP = LOC
	Entry = 2 LTER = no CNV = yes ROUT = iNRS	LDN 19058630100 DID yes MXX no SAVE 4 RNGE 2000 5999	DEL = 0 INST = P9000 CTYP = CDP
	Entry = 3 LTER = no CNV = yes ROUT = BILL PRI	LDN 19058630100 DID yes MXX no SAVE 4 RNGE 2000 5999	DEL = 0 CTYP = INTL
	Entry = 4 LTER = no CNV = yes ROUT = RICH PRI	LDN 19058630100 DID yes MXX no SAVE 4 RNGE 2000 5999	DEL = 0 CTYP = INTL
570	Entry = 0 LTER = no CNV = no ROUT = eNRS	N/A	DEL = 0 CTYP = LOC
	Entry = 1 LTER = no CNV = yes ROUT = eNRS	LDN 35391730100 DID yes MXX no SAVE 4 RNGE 2000 7999	DEL = 0 INST = P9000 CTYP = CDP
	Entry = 2 LTER = no CNV = yes ROUT = BILL PRI	LDN 35391730100 DID yes MXX no SAVE 4 RNGE 2000 7999	DEL = 0 CTYP = INTL
	Entry = 3 LTER = no CNV = yes ROUT = RICH PRI	LDN 35391730100 DID yes MXX no SAVE 4 RNGE 2000 7999	DEL = 0 CTYP = INTL

Copyright © 2010 Nortel Networks. All Rights Reserved.

LOC	RLI entry	CNV	DMI
574	Entry = 0 LTER = no ROUT = eNRS	N/A	DEL = 0 CTYP = LOC
	Entry = 1 LTER = no CNV = yes ROUT = eNRS	LDN 322550100 DID yes MXX no SAVE 4 RNGE 2000 7999	DEL = 0 INST = P9000 CTYP = CDP
	Entry = 2 LTER = no CNV = yes ROUT = BILL PRI	LDN 322550100 DID yes MXX no SAVE 4 RNGE 2000 7999	DEL = 0 CTYP = INTL
	Entry = 3 LTER = no CNV = yes ROUT = RICH PRI	LDN 322550100 DID yes MXX no SAVE 4 RNGE 2000 7999	DEL = 0 CTYP = INTL

Table 62
LOC configuration for HS-B system

LOC	RLI entry	CNV	DMI
570	Entry = 0 LTER = yes CONA = yes	N/A	DEL = 0 CTYP = CDP
	Entry = 1 LTER = no ROUT = iNRS	N/A	DEL = 0 CTYP = LOC
	Entry = 2 LTER = no ROUT = iNRS	LDN 35391730100 DID yes MXX no SAVE 4 RNGE 2000 7999	DEL = 0 INST = P9000 CTYP = CDP
	Entry = 3 LTER = no ROUT = BEL PRI	LDN 35391730100 DID yes MXX no SAVE 4 RNGE 2000 7999	DEL = 0 CTYP = INTL

Copyright © 2010 Nortel Networks. All Rights Reserved.

LOC	RLI entry	CNV	DMI
574	Entry = 0 LTER = yes CONA = yes	N/A	DEL = 0 CTYP = CDP
	Entry = 1 LTER = no CNV = no ROUT = iNRS	no	121 DEL = 0 CTYP = LOC
	Entry = 2 LTER = no CNV = yes ROUT = iNRS	LDN 322550100 DID yes MXX no SAVE 4 RNGE 2000 7999	DEL = 0 INST = P9000 CTYP = CDP
	Entry = 3 LTER = no CNV = yes ROUT = BEL PRI	LDN 322550100 DID yes MXX no SAVE 4 RNGE 2000 7999	DEL = 0 CTYP = INTL
343	Entry = 0 LTER = no ROUT = 0	N/A	DEL = 0 CTYP = NCHG
	Entry = 1 LTER = no CNV = yes ROUT = iNRS	LDN 16139660100 DID yes MXX yes SAVE 4 OFFC 961 RNGE 2000 3999 OFFC 967 RNGE 5000 5999	DEL = 0 INST = P9000 CTYP = CDP
	Entry = 2 LTER = no CNV = yes ROUT = BEL PRI	LDN 16139660100 DID yes MXX yes SAVE 4 OFFC 961 RNGE 2000 3999 OFFC 967 RNGE 5000 5999	DEL = 0 CTYP = INTL

Copyright © 2010 Nortel Networks. All Rights Reserved.

LOC	RLI entry	CNV	DMI
39	Entry = 0 LTER = no ROUT = 0	N/A	DEL = 0 CTYP = NCHG
	Entry = 1 LTER = no CNV = yes ROUT = iNRS	LDN 16137630100 DID yes MXX no SAVE 5 RNGE 30000 39999	DEL = 0 INST = P9000 CTYP = CDP
	Entry = 2 LTER = no CNV = yes ROUT = BEL PRI	LDN 16137630100 DID yes MXX no SAVE 5 RNGE 30000 39999	DEL = 0 CTYP = INTL
333	Entry = 0 LTER = no ROUT = 0	N/A	DEL = 0 CTYP = NCHG
	Entry = 1 LTER = no CNV = yes ROUT = iNRS	LDN 19058630100 DID yes MXX no SAVE 4 RNGE 2000 5999	DEL = 0 INST = P9000 CTYP = CDP
	Entry = 2 LTER = no CNV = yes ROUT = BEL PRI	LDN 19058630100 DID yes MXX no SAVE 4 RNGE 2000 5999	DEL = 0 CTYP = INTL

Distant Steering Code

Table 63
Distant Steering Codes configuration for HS- A

HA group	DSC	RLI	Entry	DMI	ROUT	Description
A1	3435	3	0 LTER = no	3 DEL = 0 CTYP = CDP	iNRS	Belleville Fax 1
	3935	3	0 LTER = no	3 DEL = 0 CTYP = CDP	iNRS	Ottawa Fax 1
A2	3335	3	0 LTER = no	3 DEL = 0 CTYP = CDP	iNRS	Toronto Fax 1

Copyright © 2010 Nortel Networks. All Rights Reserved.

Table 64
Distant Steering Codes configuration for HS- B

HA group	DSC	RLI	Entry	DMI	ROUT	Description
B1	5705	3	0 LTER = no	DEL = 0 CTYP = CDP	iNRS	Galway Fax 1

Trunk Steering Code

Table 65
Trunk Steering Code configuration for HS-A

HA group	TSC	RLI entry	DMI	ROUT	Description
A1	90001	Entry 0 LTER = no	DEL = 5 CTYP = INTL	eNRS	Steering code to eNRS for PSTN TEHO Routing
	3439000	Entry 0 LTER = no	DEL = 0 CTYP = CDP	iNRS	Steering code to Belleville Gateway
	399000	Entry 0 LTER = no	DEL = 0 CTYP = CDP	iNRS	Steering code to Ottawa Gateway
	2489000	Entry 0 LTER = no	DEL = 7 CTYP = INTL	BOS PRI	Steering Code to Boston PRI
A2	90002	Entry 0 LTER = no	DEL = 5 CTYP = INTL	eNRS	Steering Code to eNRS for PSTN TEHO Routing
	3339000	Entry 0 LTER = no	DEL = 0 CTYP = INTL	iNRS	Steering Code to Toronto Gateway
	4449000	Entry 0 LTER = no	DEL = 7 CTYP = INTL	BILL PRI	Steering Code to Richardson PRI

Table 66
Trunk Steering Code configuration for HS-B

HA group	TSC	RLI entry	DMI	ROUT	Description
B1	90001	Entry 0 LTER = no	DEL = 5 CTYP = INTL	eNRS	Steering Code to eNRS for PSTN TEHO Routing
	5709000	Entry 0 LTER = no	DEL = 0 CTYP = CDP	iNRS	Steering code to Galway Gateway
	5749000	Entry 0 LTER = no	DEL = 7 CTYP = INTL	BEL PRI	Steering code to Belgium PRI

ESA configuration

This section provides ESN configuration information.

ZFDP ESDN configuration

The following table shows ZFDP ESDN configuration information.

Copyright © 2010 Nortel Networks. All Rights Reserved.

Table 67
ZFDP ESDN configuration table

Site		Matching digits	Type	Replacement digits
HA group A1	Belleville	911	ESDN	911
	Ottawa	911	ESDN	911
HA group A2	Toronto	911	ESDN	911
HA group B1	Galway	999	ESDN	999
		112	ESDN	112
	Belgium	110	ESDN	110
		112	ESDN	112

ERL configuration

The following table shows ERL configuration information.

Table 68
ERL configuration table

ERL	RLI	Entry	DMI	Description
100	110	Entry = 0 LTER = no ROUT = iNRS	DMI = 102 DEL = 0 INST = 3439000 CTYP = CDP	Belleville R1A Route to Bellevill e Gateway
101	110	Entry = 0 LTER = no ROUT = iNRS	DMI = 102 DEL = 0 INST = 3439000 CTYP = CDP	Belleville H1A – H3A Route to Bellevill e Gateway
102	110	Entry = 0 LTER = no ROUT = iNRS	DMI = 102 DEL = 0 INST = 3439000 CTYP = CDP	Belleville H4A – H6A Route to Bellevill e Gateway
103	110	Entry = 0 LTER = no ROUT = iNRS	DMI = 102 DEL = 0 INST = 3439000 CTYP = CDP	Belleville H1B – H3B Route to Bellevill e Gateway
104	110	Entry = 0 LTER = no ROUT = iNRS	DMI = 102 DEL = 0 INST = 3439000 CTYP = CDP	Belleville H4B – H6B Route to Bellevill e Gateway
105	110	Entry = 0 LTER = no ROUT = iNRS	DMI = 102 DEL = 0 INST = 3439000 CTYP = CDP	Belleville H7B – H8B Route to Bellevill e Gateway

Copyright © 2010 Nortel Networks. All Rights Reserved.

ERL	RLI	Entry	DMI	Description
106	111	Entry = 0 LTER = no ROUT = iNRS	DMI = 103 DEL = 0 INST = 399000 CTYP = CDP	Ottawa R1A Route to Ottawa Gateway
150	160	Entry = 0 LTER = no ROUT = iNRS	DMI = 151 DEL = 0 INST = 3399000 CTYP = CDP	Toronto R1A Route to Toronto Gateway

ESA Subnet configuration

Subnet	ERL	ECL	Location Description
172.26.0.0/20	100	0	Location Belleville R1A
172.26.32.0/20	101	1	Location Belleville H1A
172.26.96.0/20	101	1	Location Belleville H2A
172.26.192.0/20	101	1	Location Belleville H3A
172.26.160.0/20	102	2	Location Belleville H4A
172.26.48.0/20	102	2	Location Belleville H5A
172.26.112.0/20	102	2	Location Belleville H6A
172.52.0.0/20	103	3	Location Belleville H1B
172.52.32.0/20	103	3	Location Belleville H2B
172.52.64.0/20	103	3	Location Belleville H3B
172.52.96.0/20	104	4	Location Belleville H4B
172.26.128.0/20	104	4	Location Belleville H5B
172.52.128.0/20	104	4	Location Belleville H6B
172.52.160.0/20	105	5	Location Belleville H7B
172.52.192.0/20	105	5	Location Belleville H8B

Copyright © 2010 Nortel Networks. All Rights Reserved.

Copyright © 2010 Nortel Networks. All Rights Reserved.

Detailed call flows

This chapter describes the key call flows for various call scenarios. Not all possible call scenarios are described.

Normal mode intranumzone calls

Belleville IP calling Belleville IP: call flow

3432000 calls 3432001 by dialing 2001

1. numzone prefix 343 is inserted and number becomes 3432001.
2. 3432001 is a local number and is locally terminated.

Belleville IP calling Belleville TDM (Survivable SIP Media Gateway): call flow

3432000 calls 3435005 by dialing 5005

At HA group A1:

1. numzone prefix is inserted and the number becomes 3435005 (CDP).
2. DSC 3435 Entry 0 routes to iNRS.
3. iNRS 3435005 (CDP) entry routes the call to Belleville Gateway.

   At Belleville Gateway:

4. 3435005 is a local number and is locally terminated.

Boston IP calling Boston TDM (SMG): call flow

2482000 calls 2485005 by dialing 5005

At HA group A1:

1. Numzone prefix 248 is inserted and number to become 2485005
2. 2485005 is a local number and is locally terminated

Copyright © 2010 Nortel Networks. All Rights Reserved.

Belleville TDM (Survivable SIP Media Gateway) calling Belleville IP: call flow

3435005 calls 3432000 by dialing 2000
At Belleville Gateway:

1. Numzone prefix 343 is inserted and the number becomes 3432000.
2. The number is not local and gets routed via VNR to the iNRS.
3. The iNRS tandems call to HA group A1.

At HA group A1:

1. 3432000 is a local number and terminates locally.

Belleville TDM (Survivable SIP Media Gateway) calling Belleville TDM (Survivable SIP Media Gateway): call flow

3435005 calls 3435006 by dialing 5006
At Belleville Gateway:

1. Numzone prefix 343 is inserted and number to become 3435006
2. 3435006 is a local number and is locally terminated

Normal mode internumzone using LOC dialing

This section describes the key call flows for various call scenarios. Not all possible call scenarios are described.

Calls within an HA group

The following are key call flows for various call scenarios.

Belleville IP calling Ottawa IP: call flow

3432000 calls 3932001 by dialing 963932001
Call Flow:

1. 6 is removed and ACx is inserted.
2. Number becomes AC2 + 3932001 (LOC).
3. LOC 39 entry 0 configured to LTER, 3932001 is a local number and is terminated locally.

Belleville IP calling Ottawa TDM (Survivable SIP Media Gateway): call flow

3432000 calls 3935005 by dialing 63935005
At HA group A1:

1. 6 is removed and ACx is inserted.
2. Number becomes AC2 +3935005 (LOC).

Copyright © 2010 Nortel Networks. All Rights Reserved.

3. LOC 39 entry 0 configured to LTER, number matches DSC 3935 and is routed to iNRS.
4. iNRS 3935 (CDP) entry routes the call to Ottawa Gateway.

   At Ottawa Gateway:

   3935005 is a local number and is locally terminated.

Belleville IP calling Boston TDM (SMG)

3432000 calls 2485005 by dialing 62485005
At HA group A1:

1. 6 is removed and ACx is inserted.
2. Number becomes AC2 +2485005 (LOC).
3. LOC 248 entry 0 configured to LTER, 2485005 is a local number and is terminated locally.

Belleville TDM (Survivable SIP Media Gateway) calling Ottawa IP

3435005 calls 3932001 by dialing 63932001
At Belleville gateway:

1. 6 is removed and ACx is inserted.
2. Number becomes AC2 + 63932001 (LOC).
3. Number is not local and gets routed via VNR to iNRS.
4. iNRS tandem call to HA group A1.

   At HA group A1:

5. LOC 39 entry 0 configured to LTER, 3932001 is a local number and is terminated locally.

Belleville TDM (Survivable SIP Media Gateway) calling Ottawa TDM (Survivable SIP Media Gateway): call flow

3435005 calls 3935005 by dialing 63935005
At Belleville Gateway:

1. 6 is removed and ACx is inserted.
2. Number becomes AC2 +63935005 (LOC).
3. Number is not local and gets routed via VNR to iNRS.
4. iNRS tandem call to HA group A1.

   At HA group A1:

5. LOC 39 entry 0 configured to LTER, number matches DSC 3935 and is routed to iNRS.
6. iNRS 3935 (CDP) entry routes the call to Ottawa Gateway.

Copyright © 2010 Nortel Networks. All Rights Reserved.

At Ottawa Gateway:

7. 3935005 is a local number and is locally terminated.

Belleville TDM (Survivable SIP Media Gateway) calling Boston TDM (SMG)

3435005 calls 2485005 by dialing 62485005

At Belleville Gateway:

1. 6 is removed and ACx is inserted.
2. Number becomes AC2 +62485005 (LOC).
3. Number is not local and gets routed via VNR to iNRS.
4. iNRS tandem call to HA group A1.

   At HA group A1:

5. LOC 248 entry 0 configured to LTER, 2485005 is a local number and is terminated locally.

Calls between HA groups within an HS system

Belleville IP calling Toronto IP

3432000 calls 3334000 by dialing 63334000

At HA group A1:

1. 6 is removed and ACx is inserted.
2. Number becomes AC2+3334000 (LOC).
3. LOC 333 entry 0 configured to LTER, no match found so entry 0 fails.
4. SBOC to entry 1 which routes call to iNRS as 3334000(LOC).
5. iNRS 333 (UDP) entry routes the call to HA group A2.

   At HA group A2:

6. LOC 333 entry 0 configured to LTER, 3334000 is a local number and is locally terminated.

Belleville IP calling Toronto TDM (Survivable SIP Media Gateway)

3432000 calls 3335005 by dialing 63335005

At HA group A1:

1. 6 is removed and ACx is inserted.
2. Number becomes AC2+3335005 (LOC).
3. LOC 333, entry 0 configured to LTER, no match found so entry 0 fails.
4. SBOC to entry 1 which routes call to iNRS as 3335005(LOC).

Copyright © 2010 Nortel Networks. All Rights Reserved.

5. iNRS 333 (UDP) entry routes the call to HA group A2.

   At HA group A2:

6. LOC 333 entry 0 set to LTER, number matches DSC 3335 and is routed to iNRS
7. iNRS 3335 (CDP) routes the call to Toronto Gateway.

   At Toronto Gateway:

8. 3335005 is a local number and is locally terminated.

Belleville IP calling Richardson TDM (SMG)

3432000 calls 4445005 by dialing 64445005
At HA group A1:

1. 6 is removed and ACx is inserted.
2. Number becomes AC2+4445005 (LOC).
3. LOC 444, entry 0 configured to LTER, no match found so entry 0 fails.
4. SBOC to entry 1 which routes call to iNRS as 4445005(LOC).
5. iNRS 444 (UDP) entry routes the call to HA group A2.

   At HA group A2:

6. LOC 444 entry 0 configured to LTER, 4445005 is a local number and is locally terminated.

Belleville TDM (Survivable SIP Media Gateway) calling Toronto IP

3435005 calls 3334000 by dialing 63334000
At Belleville Gateway:

1. 6 is removed and ACx is inserted.
2. Number becomes AC2+3334000 (LOC).
3. Number is not local and gets routed via VNR to iNRS.
4. iNRS tandem call to HA group A1.

   At HA group A1:

5. LOC 333 entry 0 configured to LTER, no match found so entry 0 fails.
6. SBOC to entry 1 which routes call to iNRS as 3334000(LOC).
7. iNRS 333 (UDP) entry routes the call to HA group A2.

   At HA group A2:

8. LOC 333 entry 0 configured to LTER, 3334000 is a local number and is locally terminated.

Copyright © 2010 Nortel Networks. All Rights Reserved.

Belleville TDM (Survivable SIP Media Gateway) calling Toronto TDM (Survivable SIP Media Gateway)

3435005 calls 3335005 by dialing 63335005
At Belleville Gateway:

1. 6 is removed and ACx is inserted.
2. Number becomes AC2+3335005 (LOC).
3. Number is not local and gets routed via VNR to iNRS.
4. iNRS tandem call to HA group A1.

   At HA group A1:

5. LOC 333, entry 0 configured to LTER, no match found so entry 0 fails.
6. SBOC to entry 1 which routes call to iNRS as 3335005(LOC).
7. iNRS 333 (UDP) entry routes the call to HA group A2.

   At HA group A2:

8. LOC 333 entry 0 configured to LTER, number matches DSC 3335 and is routed to iNRS.
9. iNRS 3335 (CDP) routes the call to Toronto Gateway.

   At Toronto Gateway:

10. 3335005 is a local number and is locally terminated.

Belleville TDM (Survivable SIP Media Gateway) calling Richardson TDM (SMG)

3435005 calls 4445005 by dialing 64445005
At Belleville Gateway:

1. 6 is removed and ACx is inserted.
2. Number becomes AC2+4445005 (LOC).
3. Number is not local and gets routed via VNR to iNRS.
4. iNRS tandem call to HA group A1.

   At HA group A1:

5. LOC 444, entry 0 configured to LTER, no match found so entry 0 fails.
6. SBOC to entry 1 which routes call to iNRS as 4445005(LOC).
7. iNRS 444 (UDP) entry routes the call to HA group A2.

   At HA group A2:

8. LOC 444 entry 0 configured to LTER, 4445005 is a local number and is locally terminated.

Copyright © 2010 Nortel Networks. All Rights Reserved.

Normal mode internumzone using E.164 dialing

This section describes the key call flows for various call scenarios. Not all possible call scenarios are described.

Calls within an HA group

Belleville IP calling Ottawa IP

3432000 calls 3932001 by dialing 96137635001 or 616137632001

At Belleville Survivable Server:

1. 9 is removed and ACx + ZCC is inserted if dialing 96137632001.
2. 61 is removed and ACx + ZCC is inserted if dialing 616137632001.
3. Number becomes AC1 + 16137632001.
4. SPN-ARRN 1613-763:
   Entry 0 LTER, DMI converts number to AC2+ 3932001 (LOC).
5. LOC 39 entry 0 configured to LTER.
6. 3932001 configured but not registered, call proceeds to entry which has CNV = yes (Entry 2).
   Entry 2:

   CNV yes
   LDN 19058630100
   DID yes
   MXX no
   SAVE 5
   RNGE 30000 39999
7. Last five-digits are saved, so number becomes 32001.
8. The rest of the LDN is preprended so the number becomes 16137632001.
9. DMI inserts P9000, CTYP = CDP so the number becomes 343900016137632001(CDP).
10. Entry 2 routes to Belleville Gateway (point-to-point).

    At Belleville Gateway:
11. TSC entry 3439000:
    Entry 0 LTER, DMI inserts 99 (AC1), CTYP = INTL.
12. Number becomes AC1+343900016137632001
13. SPN-ARRN 343-90001:
    Entry 0, DMI removes 3439000, CTYP = INTL.
14. Number becomes 16137632001(E164/INTL).
15. Entry 0 routes the call through PRI route to PSTN.
16. Call is routed through PSTN to Ottawa site.

Copyright © 2010 Nortel Networks. All Rights Reserved.

Belleville IP calling Ottawa TDM (Survivable SIP Media Gateway)

3432000 calls 3935005 by dialing 96137635005 or 616137635005

At Belleville Survivable Server:

1. 9 is removed and ACx + ZCC is inserted if dialing 96137635005.
2. 61 is removed and ACx + ZCC is inserted if dialing 616137635005
3. Number becomes AC1 +16137635005.
4. SPN-ARRN 1613-763:
   Entry 0 LTER, DMI converts number to AC2+ 3935005(LOC).
5. LOC 39 entry 0 configured to LTER, no match found so entry 0 fails.
6. SBOC to entry 1 which routes call Belleville Gateway (point-to-point) as 3935005 (LOC).

   At Belleville Gateway:

7. Number is not local and VNR is blocked due to trunk access restriction.

   At Belleville Survivable Server:

8. SBOC to Entry 2:
   CNV yes
   LDN 16137630100
   DID yes
   MXX no
   SAVE 5
   RNGE 30000 39999
9. Last five-digits are saved, so number becomes 35005.
10. The remaining LDN is prepended so the number becomes 16137635005.
11. DMI inserts P9000, CTYP = CDP so the number becomes 34390001613763500 5(CDP).
12. Entry 2 routes to Belleville (point-to-point)

    At Belleville Gateway:

13. TSC entry 3439000:
    Entry 0 LTER, DMI inserts 99 (AC1), CTYP = INTL
14. Number becomes AC1+343900016137635005
15. SPN-ARRN 343-90001:
    Entry 0, DMI removes 3439000, CTYP = INTL.
16. Number becomes 16137635005(E164/INTL)

Copyright © 2010 Nortel Networks. All Rights Reserved.

17. Entry 0 routes the call through the PRI route to PSTN
18. Call is routed through PSTN to Ottawa site.

TEHO: Originating station and preferred gateway are within an HA group

Belleville IP calling Belleville PSTN (SMG): call flow

3432000 calls PSTN 6139610790 by dialing 96139610790 or 616139610790

At HA group A1:

1. 9 is removed and ACx + ZCC is inserted if dialing 96139610790.
2. 61 is removed and ACx + ZCC is inserted if dialing 616139610790.
3. Number becomes AC1 + 16139610790.
4. SPN 1613, Entry 0, LTER, DMI inserts 90002, CTYP = CDP.
5. Number becomes 9000216139610790(CDP).
6. TSC 90002 does not exist in HA group A1, so Entry 0 fails.
7. SBOC to Entry 1, FSNI, LTER, DMI inserts 399000, CTYP = CDP.
8. Entry 2 FSNI does not allow 1613-961, so Entry 2 fails.
9. SBOC to Entry 2, FSNI, LTER, DMI inserts 3439000 and CTYP = CDP.
10. Entry 3 FSNI allows 1613-961.
11. Number becomes 343900016139610790(CDP).
12. TSC 3439000 Entry 0 routes call to iNRS.
13. iNRS 3439000(CDP) routes call to Belleville Gateway.

    At Belleville Gateway:

14. TSC entry 3439000:
15. Number becomes AC1+343900016139610790.
16. SPN-ARRN 343-90001:

    Entry 0, DMI removes 3439000, CTYP = INTL

17. Number becomes 16139610790(E164/INTL).
18. Entry 0 routes the call via PRI route to PSTN.

Copyright © 2010 Nortel Networks. All Rights Reserved.

Belleville IP calling Belleville PSTN (Survivable Media Gateway): call flow

3432000 calls PSTN 6139610790 by dialing 96139610790 or 616139610790

At HA group A1:

1. 9 is removed and ACx + ZCC is inserted if dialing 96139610790.
2. 61 is removed and ACx + ZCC is inserted if dialing 616139610790.
3. Number becomes AC1 + 16139610790.
4. SPN 1613
   Entry 0, LTER, DMI inserts 90002, CTYP = CDP
5. Number becomes 9000216139610790(CDP).
6. TSC 90002 does not exist in HA group A1, so Entry 0 fails.
7. SBOC to Entry 1, FSNI, LTER, DMI inserts 399000, CTYP = CDP.
8. Entry 2 FSNI does not allow 1613-961, so Entry 2 fails.
9. SBOC to Entry 2, FSNI, LTER, DMI inserts 3439000 and CTYP = CDP.
10. Entry 3 FSNI allows 1613-961.
11. Number becomes 343900016139610790(CDP).
12. TSC 3439000 Entry 0 routes call to iNRS.
13. iNRS 3439000(CDP) routes call to Belleville Gateway.

    At Belleville gateway:

14. TSC entry 3439000:
    Entry 0 LTER, DMI inserts 99 (AC1), CTYP = INTL.
15. Number becomes AC1+343900016139610790.
16. SPN-ARRN 343-90001:
    Entry 0, DMI removes 3439000, CTYP = INTL
17. Number becomes 16139610790(E164/INTL).
18. Entry 0 routes the call through PRI route to PSTN.

Belleville IP calling Ottawa PSTN (Survivable SIP Media Gateway): call flow

3432000 calls PSTN 6137641234 by dialing 96137641234 or 616137641234

At HA group A1:

1. 9 is removed and ACx + ZCC is inserted if dialing 96137641234.
2. 6 is removed and ACx is inserted if dialing 616137641234.
3. Number becomes AC1 + 16137641234..

Copyright © 2010 Nortel Networks. All Rights Reserved.

4. SPN 1613:
   Entry 0, LTER, DMI inserts 90002, CTYP = CDP.
5. Number becomes 9000216137641234(CDP).
6. TSC 90002 does not exist in HA group A1, so Entry 0 fails.
7. SBOC to Entry 1, FSNI, LTER, DMI inserts 399000, CTYP = CDP.
8. Entry 1 FSNI allows 1613-764.
9. Number becomes 39900016137641234(CDP).
10. TSC 399000 Entry 0 routes call to iNRS.
11. iNRS 399000(CDP) routes call to Ottawa Gateway.

    At Ottawa Gateway:
12. TSC entry 399000:

    Entry 0, LTER, DMI inserts 99 (AC1), CTYP = INTL
13. Number becomes AC1+39900016137641234.
14. SPN-ARRN 39-90001.
15. Entry 0, DMI removes 399000, CTYP = INTL.
16. Number becomes 16137641234(E164/INTL).
17. Entry 0 routes the call through PRI route to PSTN.

Belleville IP calling Boston PSTN (SMG): call flow

3432000 calls PSTN 9786751212 by dialing 619786751212
At HA group A1:

1. 6 is removed and ACx is inserted.
2. Number becomes AC1 + 19786751212.
3. Number becomes AC1 +16137635005.
4. SPN 1978::
   Entry 0, LTER, DMI inserts 90002, CTYP = CDP.
5. TSC 90002 does not exist in HA group A1, so Entry 0 fails.
6. SBOC to Entry 1, LTER, DMI inserts 2489000, CTYP = CDP.
7. Number becomes 24890001978675121 2(CDP).
8. TSC 2489000 Entry 0, DMI removes 2489000, CTYP = INTL.
9. Number becomes 19786751212(E.164/INTL).
10. Entry 0 routes the call through the PRI route to PSTN.

Copyright © 2010 Nortel Networks. All Rights Reserved.

Belleville TDM (SSMG) calling Belleville PSTN (SMG): call flow

3435005 calls PSTN 6139610790 by dialing 96139610790 or 616139610790

At Belleville Gateway:

1. 9 is removed and ACx + ZCC is inserted if dialing 96139610790.
2. 61 is removed and ACx + ZCC is inserted if dialing 616139610790.
3. Number is not local and gets routed through the VNR to iNRS.
4. iNRS tandem call to HA group A1.

   At HA group A1:

5. SPN 1613:
   Entry 0, LTER, DMI inserts 90002, CTYP = CDP
6. Number becomes 9000216139610790 (CDP).
7. TSC 90002 does not exist in HA group A1, so Entry 0 fails.
8. SBOC to Entry 1, FSNI, LTER, DMI inserts 399000, CTYP = CDP.
9. Entry 1 FSNI does not allow 1613-961, so Entry 2 fails.
10. SBOC to Entry 2, FSNI, LTER, DMI inserts 3439000 and CTYP = CDP.
11. Entry 2 FSNI allows 1613-961.
12. Number becomes 343900016139610790 (CDP).
13. TSC 3439000 Entry 0 routes call to iNRS.
14. iNRS 3439000 (CDP) routes call to Belleville Gateway.

    At Belleville Gateway:

15. TSC entry 3439000:
    Entry 0 LTER, DMI inserts 99 (AC1), CTYP = INTL
16. Number becomes AC1+343900016139610790.
17. SPN-ARRN 343-90001:
    Entry 0, DMI removes 3439000, CTYP = INTL
18. Number becomes 16139610790(E164/INTL).
19. Entry 0 routes the call through the PRI route to PSTN.

Copyright © 2010 Nortel Networks. All Rights Reserved.

Belleville TDM (Survivable SIP Media Gateway) calling Ottawa PSTN (Survivable SIP Media Gateway): call flow

3435005 calls PSTN 6137641234 by dialing 96137641234 or 616137641234

At Belleville Gateway:

1. 9 is removed and ACx + ZCC is inserted if dialing 96137641234.
2. 61 is removed and ACx + ZCC is inserted if dialing 616137641234.
3. Number becomes AC1 + 16137641234.
4. Number is not local and gets routed via VNR to iNRS.
5. iNRS tandem call to HA group A1.

   At HA group A1:

6. SPN 1613:

   Entry 0, LTER, DMI inserts 90002, CTYP = CDP.

7. Number becomes 9000216137641234 (CDP).
8. TSC 90002 does not exist in Core A1, so Entry 0 fails.
9. SBOC to Entry 1, FSNI, LTER, DMI inserts 399000, CTYP = CDP.
10. Entry 1 FSNI allows 1613-764.
11. Number becomes 39900016137641234 (CDP).
12. TSC 399000 Entry 0 routes call to iNRS.
13. iNRS 399000(CDP) routes call to Ottawa Gateway

    At Ottawa Gateway:

14. TSC entry 399000:
    Entry 0, LTER, DMI inserts 99 (AC1), CTYP = INTL.
15. Number becomes AC1+39900016137641234.
16. SPN-ARRN 39-90001.
17. Entry 0, DMI removes 399000, CTYP = INTL.
18. Number becomes 16137641234(E164/INTL).
19. Entry 0 routes the call through the PRI route to PSTN.

Belleville TDM (Survivable SIP Media Gateway) calling Boston PSTN (Survivable Media Gateway): call flow

3435005 calls PSTN 6137641234 by dialing 619786751212

At Belleville Gateway:

1. 61 is removed and ACx + ZCC is inserted.
2. Number becomes AC1 + 19786751212.
3. Number is not local and gets routed through the VNR to the iNRS.

Copyright © 2010 Nortel Networks. All Rights Reserved.

4. iNRS tandem call to HA group A1.

   At HA group A1:

5. SPN 1978:.
   Entry 0, LTER, DMI inserts 90002, CTYP = CDP.
6. Number becomes 9000219786751212(CDP)

   Entry 0 LTER, DMI converts number to AC2+ 3935005(LOC).
7. TSC 90002 does not exist in Core A1, so Entry 0 fails.
8. SBOC to Entry 1, LTER, DMI inserts 2489000, CTYP = CDP.
9. Number becomes 248900019786751212(CDP).
10. TSC 2489000 Entry 0, DMI removes 2489000, CTYP = INTL.
11. Number becomes 19786751212(E.164/INTL).
12. Entry 0 routes the call via PRI route to PSTN.

Tail End Hop Off: originating station and preferred gateway are in different HA groups within an HS system

Belleville IP calling Toronto PSTN (Survivable SIP Media Gateway): call flow

3432000 calls PSTN 9058661234 by dialing 619056315678
At HA group:

1. 61 is removed and ACx + ZCC is inserted.
2. Number becomes AC1+19056315678.
3. SPN 1905:
   Entry 0, LTER, DMI inserts 90001, CTYP = CDP
4. Number becomes 9000119056315678(CDP).
5. TSC 90001 Entry 0 removes 90001, CTYP = INTL.
6. Number becomes 19056315678(E164/INTLl).
7. Entry 0 routes call to eNRS.
8. eNRS 1905 (E.164) routes call to HA group A2.

   At HA group A2:

9. SPN 1905:
   Entry 0, LTER, DMI inserts 90001, CTYP = CDP.
10. Number becomes 9000119056315678(CDP).
11. TSC 90001 does not exist in Core A2, so Entry 0 fails.
12. SBOC to Entry 1, LTER, DMI inserts 3339000 and CTYP = CDP.
13. Number becomes 333900019056315678(CDP).

Copyright © 2010 Nortel Networks. All Rights Reserved.

14. TSC 3339000 Entry 0 routes call to iNRS.
15. iNRS 3339000 (CDP) routes call to Toronto Gateway.

    At Toronto Gateway:

16. TSC entry 3339000:
    Entry 0 LTER, DMI inserts 99 (AC1), CTYP = INTL.
17. Number becomes AC1+333900019056315678.
18. SPN-ARRN 333-90001:
    Entry 0, DMI removes 3339000, CTYP = INTL.
19. Number becomes 19056315678(E164/INTL).
20. 20) Entry 0 routes the call via PRI route to PSTN

Belleville IP calling Richardson PSTN (Survivable Media Gateway): call flow

3432000 calls PSTN 9726845555 by dialing 619726845555
At HA group A1:

1. 61 is removed and ACx + ZCC is inserted.
2. Number becomes AC1+19726845555.
3. SPN 1972:
   Entry 0, LTER, DMI inserts 90001, CTYP = CDP
4. Number becomes 9000119726845555(CDP).
5. TSC 90001 Entry 0 removes 90001, CTYP = INTL.
6. Number becomes 19726845555(E164/INTLl).
7. Entry 0 routes call to eNRS.
8. eNRS 1972 (E.164) routes call to HA group A2

   At HA group A2:

9. SPN 1972:

   Entry 0, LTER, DMI inserts 90001, CTYP = CDP

10. Number becomes 9000119726845555(CDP)
11. TSC 90001 does not exist in Core A2, so Entry 0 fails
12. SBOC to Entry 1, LTER, DMI inserts 4449000 and CTYP = CDP
13. TSC 4449000 Entry 0, DMI removes 4449000, CTYP = INTL
14. Number becomes 19726845555(E.164/INTL)
15. Entry 0 routes the call via PRI route to PSTN

Copyright © 2010 Nortel Networks. All Rights Reserved.

Belleville TDM (Survivable SIP Media Gateway) calling Toronto PSTN (Survivable Media Gateway): call flow

3435005 calls PSTN 9058661234 by dialing 619056315678

At Belleville Gateway:

1. 61 is removed and ACx + ZCC is inserted.
2. Number becomes AC1+19056315678.
3. Number is not local and gets routed through the VNR to iNRS.
4. iNRS tandem call to HA group A1.

   At HA group A1:

5. SPN 1905:
   Entry 0, LTER, DMI inserts 90001, CTYP = CDP.
6. Number becomes 9000119056315678 (CDP).
7. TSC 90001 Entry 0 removes 90001, CTYP = INTL.
8. Number becomes 19056315678(E164/INTLl).
9. Entry 0 routes call to eNRS.
10. eNRS 1905 (E.164) routes call to HA group A2.

    At HA group A2:

11. SPN 1905:
    Entry 0, LTER, DMI inserts 90001, CTYP = CDP.
12. Number becomes 9000119056315678(CDP).
13. TSC 90001 does not exist in HA group A2, so Entry 0 fails.
14. SBOC to Entry 1, LTER, DMI inserts 3339000 and CTYP = CDP.
15. Number becomes 339900019056315678(CDP).
16. TSC 3339000 Entry 0 routes call to iNRS.
17. iNRS 3339000 (CDP) routes call to TOR G/W

    At Belleville Gateway:

18. TSC entry 3339000:
    Entry 0 LTER, DMI inserts 99 (AC1), CTYP = INTL
19. Number becomes AC1+339900019056315678
20. SPN-ARRN 333-90001:
    Entry 0, DMI removes 3339000, CTYP = INTL
21. Number becomes 19056315678(E164/INTL)
22. Entry 0 routes the call through the PRI route to PSTN

Copyright © 2010 Nortel Networks. All Rights Reserved.

Belleville TDM (Survivable SIP Media Gateway) calling Richardson PSTN (Survivable Media Gateway): call flow

3435005 calls PSTN 9726845555 by dialing 619726845555
At Belleville Gateway:

1. 61 is removed and ACx + ZCC is inserted.
2. Number becomes AC1+19726845555.
3. Number is not local and gets routed through the VNR to iNRS.
4. iNRS tandem call to HA group A1.

   At HA group A1:

5. SPN 1972:
   Entry 0, LTER, DMI inserts 90001, CTYP = CDP.
6. Number becomes 9000119726845555(CDP).
7. TSC 90001 Entry 0 removes 90001, CTYP = INTL.
8. Number becomes 19726845555(E164/INTLl).
9. Entry 0 routes call to eNRS.
10. eNRS 1972 (E.164) routes call to HA group A2

    At HA group A2:

11. SPN 1972:
    Entry 0, LTER, DMI inserts 90001, CTYP = CDP.
12. Number becomes 9000119726845555(CDP).
13. TSC 90001 does not exist in Core A2, so Entry 0 fails.
14. SBOC to Entry 1, LTER, DMI inserts 4449000 and CTYP = CDP.
15. TSC 4449000 Entry 0, DMI removes 4449000, CTYP = INTL.
16. Number becomes 19726845555(E.164/INTL).
17. Entry 0 routes the call through the PRI route to PSTN.

Sourced based routing using gateway at originating station (no Tail End Hop Off)

Belleville IP calling Toronto PSTN

3432000 calls PSTN 9058661234 by dialing 619056315678
At HA group A1:

1. 61 is removed and ACx + ZCC is inserted.
2. Number becomes AC1 + 19056315678.
3. SPN 1905:
   Entry 0, LTER, DMI inserts P9000, CTYP = CDP

Copyright © 2010 Nortel Networks. All Rights Reserved.

4. Number becomes 343900019056315678(CDP)
5. TSC 3439000 Entry 0 routes call to iNRS.
6. iNRS 3439000(CDP) routes call to Belleville Gateway

   At Belleville Gateway:
7. TSC entry 3439000:
   Entry 0 LTER, DMI inserts 99 (AC1), CTYP = INTL.
8. Number becomes AC1+343900019056315678.
9. SPN-ARRN 343-90001:
   Entry 0, DMI removes 3439000, CTYP = INTL
10. Number becomes 19056315678(E164/INTL)
11. Entry 0 routes the call through the PRI route to PSTN

Belleville TDM (Survivable SIP Media Gateway) calling Toronto PSTN

3435005 calls PSTN 9058661234 by dialing 619056315678
At Belleville Gateway:

1. 61 is removed and ACx + ZCC is inserted.
2. Number becomes AC1+19056315678.
3. Number is not local and gets routed through VNR to iNRS.
4. iNRS tandem call to HA group A1.

   At HA group A1:
5. SPN 1905:
   Entry 0, LTER, DMI inserts P9000, CTYP = CDP.
6. Number becomes 343900019056315678(CDP).
7. TSC 3439000 Entry 0 routes call to iNRS.
8. iNRS 3439000(CDP) routes call to Belleville Gateway.

   At Belleville Gateway:
9. TSC entry 3439000:
   Entry 0 LTER, DMI inserts 99 (AC1), CTYP = INTL.
10. Number becomes AC1+343900019056315678.
11. SPN-ARRN 343-90001:
    Entry 0, DMI removes 3439000, CTYP = INTL.
12. Number becomes 19056315678(E164/INTL).
13. Entry 0 routes the call through the PRI route to PSTN.

Copyright © 2010 Nortel Networks. All Rights Reserved.

Boston IP calling Toronto PSTN

2482000 calls PSTN 9058661234 by dialing 619056315678
At HA group A1:

1. 61 is removed and ACx + ZCC is inserted.
2. Number becomes AC1 + 19056315678.
3. SPN 1905:
   Entry 0, LTER, DMI inserts P9000, CTYP = CDP.
4. Number becomes 248900019056315678(CDP).
5. TSC 2489000 Entry 0, DMI removes 4449000, CTYP = INTL.
6. Number becomes 19056315678(E.164/INTL).
7. Entry 0 routes the call through the PRI route to PSTN.

Incoming calls from the PSTN

PSTN call to Belleville IP

Incoming PSTN call to 3432000 (6139612000)
At Belleville Gateway:

1. Number arrives as 2000 via PRI Route (DID).
2. DID IDC converts number to 3432000.
3. Number is not local and gets routed through VNR to iNRS.
4. iNRS tandem call to HA group A1.

   At HA group A1:
5. 3432000 is a local number and is locally terminated.

PSTN call to Belleville TDM (Survivable SIP Media Gateway)

Incoming PSTN call to 3435005 (6139675005).
At Belleville Gateway:

1. Number arrives as 5005 via PRI Route (DID).
2. DID IDC converts number to 3435000.
3. 3435005 is a local number and is locally terminated.

PSTN call to Boston IP (Survivable Media Gateway)

Incoming PSTN call to 2482000 (9786702000).
At HA group A1:

1. Number arrives as 2000 via PRI Route (DID).
2. DID IDC converts number to 2482000.
3. 2482000 is a local number and is locally terminated.

Copyright © 2010 Nortel Networks. All Rights Reserved.

Normal mode calls to another HS system or a Communication Server 1000 system

The following call flow shows normal mode calls to another HS system or a Communication Server 1000 system.

Using LOC dialing

The following call flow shows calls to another HS system or a Communication Server 1000 system using LOC dialing

Belleville IP calling an external LOC

3432000 calls 5805000 by dialing 65805000.
At HA group A1:

1. LOC 580 entry 0 routes call to eNRS.
2. eNRS (or its collaborative servers) entry 580 (UDP) routes call to external HS or Communication Server 1000 system.

Using E.164 dialing

The following call flow shows calls to another HS system or a Communication Server 1000 system using E.164 dialing

Belleville IP calling an external LOC using E.164 dialing

3432000 calls 5702000 by dialing 612122852000.
At HA group A1:

1. 61 is removed and ACx + ZCC is inserted.
2. Number becomes AC1 + 12122852000.
3. SPN 1212 entry 0 routes call to eNRS.
4. HS-A eNRS (or its collaborative servers) entry 1212285 (E.164) routes call to external HS or CS 1000 system.

Off-net (PSTN) calls: Tail End Hop Off using a gateway in another HS system

Belleville IP calling Galway PSTN (Survivable SIP Media Gateway)

3432000 calls 35391752222 by dialing 601135391752222.
At HA group A1:

1. 6011 is removed and ACx is inserted.
2. Number becomes AC1 + 35391752222.
3. SPN 353 entry 0 routes call to HS-A eNRS.

Copyright © 2010 Nortel Networks. All Rights Reserved.

4. Call is routed to HA group B1 using 353 (E.164) entry in HS-B eNRS which is in collaboration with HS-A eNRS.

   At HA group B1:

5. SPN 353:
   Entry 0, LTER, DMI inserts 90002, CTYP = CDP.
6. Number becomes 9000235391752222(CDP).
7. TSC 90002 does not exist in HA group B1, so Entry 0 fails.
8. SBOC to Entry 1, LTER, DMI inserts 5709000 and CTYP = CDP.
9. Number becomes 570900035391752222(CDP).
10. TSC 5709000 Entry 0 routes call to HS-B iNRS.
11. iNRS 5709000 (CDP) routes call to Galway Gateway.

    At Galway Gateway:

12. TSC entry 5709000:
    Entry 0 LTER, DMI inserts 99 (AC1), CTYP = INTL.
13. Number becomes AC1+570900035391752222.
14. SPN-ARRN 570-9000353:
    Entry 0, DMI removes 5709000, CTYP = INTL.
15. Number becomes 35391752222(E164/INTL).
16. Entry 0 routes the call through PRI route to PSTN.

Survival mode

The call flows in this section have the following conditions.

- The site that originates the call is in survival mode (WAN outage) and the SIP Signaling Gateway endpoints cannot register to the NRS servers.
- IP Phones are registered to the local or survivable Call Servers.
- For the SSMG sites: the SIP Signaling Gateways at the Survivable Server are the SIP Media Gateway Controllers that are connected using a point-to-point connection.
- For SMG sites: the SIP routes are down.

Copyright © 2010 Nortel Networks. All Rights Reserved.

Intranumzone calls

Belleville IP calling Belleville TDM (Survivable SIP Media Gateway)

3432000 calls 3435005 by dialing 5005
At Belleville Survivable Server:

1. Numzone prefix 343 is inserted and number becomes 3435005(CDP).
2. DSC 3435 Entry 0 routes to Belleville Gateway (point-to-point).

   At Belleville Gateway:

3. 435005 is a local number and is locally terminated.

Belleville TDM (Survivable SIP Media Gateway) calling Belleville IP

3435005 calling 3432000 by dialing 2000
At Belleville Gateway:

1. Numzone prefix 343 is inserted and number becomes 3432000.
2. Number is not local and gets routed via VNR to Belleville Survivable Server (point-to-point).

   At Belleville Survivable Server:

3. 3432000 is local number and is locally terminated.

Internumzone calls using LOC dialing

Belleville IP calling Ottawa IP

3432000 calls 3932001 by 63932001
At Belleville Survivable Server:

1. 6 is removed and ACx is inserted.
2. Number becomes AC2 + 3932001 (LOC).
3. LOC 39 entry 0 configured to LTER.
4. 3932001 configured but not registered, call proceeds to entry which has CNV = yes (Entry 2).
   Entry 2:

   CNV yes
   LDN 16137630100
   DID yes
   MXX no
   SAVE 5
   RNGE 30000 39999

5. Last five-digits are saved, so number becomes 32001.
6. The rest of the LDN is prepended so the number becomes 161376320015).

Copyright © 2010 Nortel Networks. All Rights Reserved.

7. DMI inserts P9000, CTYP = CDP so the number becomes 343900016137632001(CDP).
8. Entry 2 routes to Belleville Gateway (point-to-point).

   At Belleville Gateway:
9. TSC entry 3439000:

   Entry 0 LTER, DMI inserts 99 (AC1), CTYP = INTL.
10. Number becomes AC1+343900016137632001.
11. SPN-ARRN 343-90001:
    Entry 0, DMI removes 3439000, CTYP = INTL
12. Number becomes 16137632001(E164/INTL).
13. Entry 0 routes the call through PRI route to PSTN.
14. Call is routed through PSTN to the Ottawa site

Belleville IP calling Ottawa TDM (Survivable SIP Media Gateway)

3432000 calls 3935005 by 63935005
At Belleville Survivable Server:

1. 6 is removed and ACx is inserted.
2. Number becomes AC2 + 3935005 (LOC).
3. LOC 39, entry 0 configured to LTER, no match found so entry 0 fails.
4. SBOC to entry 1 which routes call Belleville Gateway (point-to-point) as 3935005(LOC).

   At Belleville Gateway:
5. Number is not local and VNR is blocked due to trunk access restriction.

   At Belleville Survivable Server:
6. SBOC to Entry 2:

   CNV yes
   LDN 16137630100
   DID yes
   MXX no
   SAVE 5
   RNGE 30000 39999
7. Last five-digits are saved, so number becomes 35005.
8. The rest of the LDN is prepended so the number becomes 16137635005.

Copyright © 2010 Nortel Networks. All Rights Reserved.

9. DMI inserts P9000, CTYP = CDP so the number becomes 343900016137635005(CDP).
10. Entry 2 routes to Belleville Gateway (point-to-point)

    At Belleville Gateway:
11. TSC entry 3439000:
    Entry 0 LTER, DMI inserts 99 (AC1), CTYP = INTL
12. Number becomes AC1+343900016137635005
13. SPN-ARRN 343-90001:
    Entry 0, DMI removes 3439000, CTYP = INTL
14. Number becomes 16137635005(E164/INTL)
15. Entry 0 routes the call via PRI route to PSTN
16. Call is routed via PSTN to CAR Site

Belleville TDM (Survivable SIP Media Gateway) calling Ottawa IP

3435005 calls 3932001 by dialing 63932001
At Belleville Gateway:

1. 6 is removed and ACx is inserted.
2. Number becomes AC2 + 63932001 (LOC).
3. Number is not local and gets routed through VNR to Belleville Survivable Server (point-to-point).

   At Belleville Survivable Server:
4. LOC 39 Entry 0 configured to LTER.
5. 3932001 configured but not registered, call proceeds to entry which has CNV = yes (Entry 2).
   Entry 2:

   CNV yes
   LDN 16137630100
   DID yes
   MXX no
   SAVE 5
   RNGE 30000 39999
6. Last five-digits are saved, so number becomes 32001.
7. The rest of the LDN is preprended so the number becomes 16137632001.
8. DMI inserts P9000, CTYP = CDP so the number becomes 343900016137632001(CDP).
9. Entry 2 routes to Belleville Gateway (point-to-point)

   At Belleville Gateway:

Copyright © 2010 Nortel Networks. All Rights Reserved.

10. TSC entry 3439000:
    Entry 0 LTER, DMI inserts 99 (AC1), CTYP = INTL.
11. Number becomes AC1+343900016137632001.
12. SPN-ARRN 343-90001:
    Entry 0, DMI removes 3439000, CTYP = INTL
13. Number becomes 16137632001(E164/INTL).
14. Entry 0 routes the call through PRI route to PSTN.
15. Call is routed through PSTN to Ottawa Site.

Belleville TDM (Survivable SIP Media Gateway) calling Ottawa TDM (Survivable SIP Media Gateway)

3435005 calls 3935005 by dialing 63935005

At Belleville Gateway:

1. 6 is removed and ACx is inserted.
2. Number becomes AC2 + 63935005 (LOC).
3. Number is not local and gets routed through VNR to Belleville Survivable Server (point-to-point).

   At Belleville Survivable Server:

4. LOC 39 Entry 0 configured to LTER, no match found so entry 0 fails.
5. SBOC to Entry 1 which routes call Belleville Gateway (point-to-point) as 3935005(LOC).

   At Belleville Gateway:

6. Number is not local and VNR is blocked due to trunk access restriction.

   At Belleville Survivable Server:

7. SBOC to Entry 2:

   CNV yes
   LDN 16137630100
   DID yes
   MXX no
   SAVE 5
   RNGE 30000 39999

8. Last five-digits are saved, so number becomes 35005.
9. The rest of the LDN is prepended so the number becomes 16137635005.
10. DMI inserts P9000, CTYP = CDP so the number becomes 343900016137635005(CDP).

Copyright © 2010 Nortel Networks. All Rights Reserved.

11. Entry 2 routes to Belleville Gateway (point-to-point).

    At Belleville Gateway:

12. TSC entry 3439000:
    Entry 0 LTER, DMI inserts 99 (AC1), CTYP = INTL.

13. Number becomes AC1+343900016137635005.
    Entry 0, DMI removes 3439000, CTYP = INTL.

14. SPN-ARRN 343-90001:
    Entry 0, DMI removes 3439000, CTYP = INTL.

15. Number becomes 16137635005(E164/INTL).

16. Entry 0 routes the call through PRI route to PSTN.

17. Call is routed through PSTN to Ottawa site.

Boston IP (Survivable Media Gateway) calling Ottawa IP

2485005 calls 3932001 by dialing 63932001
At Boston Survivable Server:

1. 6 is removed and ACx is inserted.
2. Number becomes AC2 +63932001 (LOC).
3. LOC 39 Entry 0 configured to LTER.
4. 3932001 configured but not registered, call proceeds to entry which has CNV = yes (Entry 2).
5. Routes for Entry 2 are down so Entry 2 fails.
6. SBOC to Entry 3:

   CNV yes
   LDN 16137630100
   DID yes
   MXX no
   SAVE 5
   RNGE 30000 39999

7. Last five-digits are saved, so number becomes 32001.
8. The remaining LDN is prepended so the number becomes 16137632001.
9. DMI CTYP = CDP so the number becomes 16137632001(E.164/INTL).
10. Entry 3 routes call to PRI Route to PSTN.
11. Call is routed through the PSTN to the Ottawa site.

Copyright © 2010 Nortel Networks. All Rights Reserved.

Boston IP (Survivable Media Gateway) calling Ottawa TDM (Survivable SIP Media Gateway)

2485005 calls 3935005 by dialing 63935005

At Boston Survivable Server:

1. 6 is removed and ACx is inserted.
2. Number becomes AC2 + 3935005 (LOC).
3. LOC 39, Entry 0 is configured to LTER, no match found so Entry 0 fails
4. SBOC to Entry 1, routes for Entry 1 are down so Entry 1 fails
5. SBOC to Entry 2, routes for Entry 2 are down so Entry 2 fails
6. SBOC to Entry 3:

   CNV yes
   LDN 16137630100
   DID yes
   MXX no
   SAVE 5
   RNGE 30000 39999
7. Last five-digits are saved, so the number becomes 35005.
8. The remaining LDN is prepended so the number becomes 16137635005.
9. DMI CTYP = CDP so the number becomes 16137635005(E.164 /INTL)
10. Entry 3 routes call to PRI Route to PSTN.
11. Call is routed through the PSTN to the Ottawa site.

Belleville IP (Survivable Media Gateway) calling Toronto (IP or TDM)

2485005 calls 3935005 by dialing 63935005

At Boston Survivable Server:

1. 6 is removed and ACx is inserted.
2. Number becomes AC2 + 33334000 (LOC).
3. LOC 333, entry 0 set to LTER, no match found so entry 0 fails.
4. SBOC to entry 1 which routes call Belleville Gateway (point-to-point) as 3334000(LOC).

   At Belleville Gateway:
5. Number is not local and VNR is blocked due to trunk access restriction.

   At Belleville Survivable Server:
6. SBOC to Entry 2:

Copyright © 2010 Nortel Networks. All Rights Reserved.

CNV yes
LDN 19058630100
DID yes
MXX no
SAVE 5
RNGE 2000 5999

7. Last four-digits are saved, so number becomes 4000.
8. The remaining LDN is prepended so the number becomes 19058634000.
9. DMI inserts P9000, CTYP = CDP so the number becomes 343900019058634000(CDP).
10. Entry 2 routes to Belleville Gateway (point-to-point).

    At Belleville Gateway:

11. TSC entry 3439000:
    Entry 0 LTER, DMI inserts 99 (AC1), CTYP = INTL
12. Number becomes AC1+343900019058634000
13. SPN-ARRN 343-90001:
    Entry 0, DMI removes 3439000, CTYP = INTL
14. Number becomes 19058634000(E164/INTL)
15. Entry 0 routes the call through PRI route to PSTN
16. Call is routed through PSTN to Toronto site

Boston IP (Survivable Media Gateway) calling Toronto (IP or TDM)

2485005 calls 3335005 by dialing 63335005

At Boston Survivable Server:

1. 6 is removed and ACx is inserted.
2. Number becomes AC2 + 3335005 (LOC).
3. LOC 39, Entry 0 is configured to LTER, no match found so Entry 0 fails.
4. SBOC to Entry 1, routes for Entry 1 are down so Entry 1 fails
5. SBOC to Entry 2, routes for Entry 2 are down so Entry 2 fails
6. SBOC to Entry 3:

   CNV yes
   LDN 19058630100
   DID yes
   MXX no
   SAVE 5
   RNGE 2000 5999

7. Last four-digits are saved, so number becomes 5005.

Copyright © 2010 Nortel Networks. All Rights Reserved.

8. The remaining LDN is prepended so the number becomes 19058635005.
9. DMI CTYP = INTL so the number becomes 19058635005(E.164 /INTL)
10. Entry 3 routes call to PRI Route to PSTN
11. Call is routed via PSTN to TOR Site

Internumzone calls using E.164 dialing

Belleville IP calling Ottawa IP

3432000 calls 3932001 by dialing 96137635001 or 616137632001
At Belleville Survivable Server:

1. 9 is removed and ACx + ZCC is inserted if dialing 96137632001.
2. 61 is removed and ACx + ZCC is inserted if dialing 616137632001.
3. Number becomes AC1 + 16137632001.
4. SPN-ARRN 1613-763:
   Entry 0 LTER, DMI converts number to AC2+ 3932001 (LOC).
5. LOC 39 entry 0 configured to LTER.
6. 3932001 configured but not registered, call proceeds to entry which has CNV = yes (Entry 2).
   Entry 2:

   CNV yes
   LDN 19058630100
   DID yes
   MXX no
   SAVE 5
   RNGE 30000 39999
7. Last five-digits are saved, so number becomes 32001.
8. The rest of the LDN is preprended so the number becomes 16137632001.
9. DMI inserts P9000, CTYP = CDP so the number becomes 343900016137632001(CDP).
10. Entry 2 routes to Belleville Gateway (point-to-point).

    At Belleville Gateway:

11. TSC entry 3439000:
    Entry 0 LTER, DMI inserts 99 (AC1), CTYP = INTL.
12. Number becomes AC1+343900016137632001

Copyright © 2010 Nortel Networks. All Rights Reserved.

13. SPN-ARRN 343-90001:
    Entry 0, DMI removes 3439000, CTYP = INTL.
14. Number becomes 16137632001(E164/INTL).
15. Entry 0 routes the call through PRI route to PSTN.
16. Call is routed through PSTN to Ottawa site.

Belleville IP calling Ottawa TDM (Survivable SIP Media Gateway)

3432000 calls 3935005 by dialing 96137635005 or 616137635005

At Belleville Survivable Server:

1. 9 is removed and ACx + Zcc is inserted if dialing 96137635005.
2. 61 is removed and ACx + Zcc is inserted if dialing 616137635005).
3. Number becomes AC1 +16137635005.
4. SPN-ARRN 1613-763.
   Entry 0 LTER, DMI converts number to AC2+ 3935005(LOC)
5. LOC 39 entry 0 set to LTER, no match found so entry 0 fails.
6. SBOC to entry 1 which routes call Belleville G/W (Point-to-Point) as 3935005(LOC).

   At Belleville Survivable Server:

7. Number is not local and VNR is blocked due to trunk access restriction.

   At Belleville Gateway:

8. SBOC to Entry 2: .

   CNV yes
   LDN 16137630100
   DID yes
   MXX no
   SAVE 5
   RNGE 30000 39999

9. Last five-digits are saved, so number becomes 35005.
10. The rest of the LDN is pre-pended so the number becomes 16137635005.
11. DMI inserts P9000, CTYP = CDP so the number becomes 343900016137635005(CDP).
12. Entry 2 routes to the Belleville gateway (point-to-point).

    At Belleville Gateway:

13. TSC entry 3439000:
    Entry 0, DMI removes 3439000, CTYP = INTL
14. Number becomes AC1+343900016137635005.

Copyright © 2010 Nortel Networks. All Rights Reserved.

15. SPN-ARRN 343-90001:
    Entry 0, DMI removes 3439000, CTYP = INTL
16. Number becomes 16137635005(E164/INTL).
17. Entry 0 routes the call through PRI route to PSTN.
18. Call is routed through PSTN to the Ottawa site.

Unique data for each HA group

The following section provides the unique data for the various HA groups.

HA group A1

(Node Id has to be unique because the Signaling Servers for different cores can be in the same subnet)

Node ID: 1000 SIP G/W to eNRS
1001 SIP G/W to iNRS
1008 TPS
1009 TPS

TN: 96, 120

DN: 3432000, 3432001 (TN 96 0 0 0, 96 0 0 1)
3935000, 3935001 (TN 120 0 0 0, 120 0 0 1)

SIP ROUT0 points to Node 1000
SIP ROUT1 points to Node 1001

Backup rule 1 to Belleville Survivable Server
Backup rule 2 to Ottawa Survivable Server

HA group A2

Node ID: 2000 SIP G/W to eNRS
2001 SIP G/W to iNRS
2008 TPS
2009 TPS

TN: 96

DN: 3334000, 3334001 (TN 96 0 0 0, 96 0 0 1)

SIP ROUT0 points to Node 2000
SIP ROUT1 points to Node 2001

Copyright © 2010 Nortel Networks. All Rights Reserved.

HA group B1

Node ID: 3000 SIP G/W to eNRS
3001 SIP G/W to iNRS
3008 TPS
3009 TPS

TN: 96, 120

DN: 5707000, 5707001 (TN 96 0 0 0, 96 0 0 1)
5746000, 5746001 (TN 120 0 0 0, 120 0 0 1)

SIP ROUT0 points to Node 3000
SIP ROUT1 points to Node 3001

Backup rule 1 to Galway Survivable Server
Backup rule 2 to Belgium Survivable Server

Copyright © 2010 Nortel Networks. All Rights Reserved.

Survivable Media Gateway

The appendix contains various assignment tables for Survivable Media Gateway configuration.

Navigation

- "Assignment tables" (page 175)

Assignment tables

The following tables show the various assignment tables.

Table 69
Numzone assignment table

Site		Numzone	Numzone prefix
HA group A1	Belleville	100	343
	Ottawa	101	39
HA group A2	Toronto	150	333
HA group B1	Galway	200	570
	Belgium	201	574

Table 70
Bandwidth Zone assignment

Site		Bandwidth Zone (VTRK)	Bandwidth Zone (MGC VGW)
HA group A1	Belleville	1	2
	Ottawa	1	2
HA group A2	Toronto	1	2
HA group B1	Galway	1	2
	Belgium	1	2

Copyright © 2010 Nortel Networks. All Rights Reserved.

Table 71
DN and TN assignment

Site		DN				Description
			Area Code	Number	TN	
HA group A1	Belleville	3435005	613	9675005	96 0 0 0	Belleville FAX1
		3435006	613	9675006	96 0 0 1	Belleville FAX2
	Ottawa	3935005	613	7635005	120 0 0 0	Ottawa FAX1
		3955006	613	7635006	120 0 0 1	Ottawa FAX2
HA group A2	Toronto	3335005	905	8635005	96 0 0 0	Toronto FAX1
HA group B1	Galway	5707005	91	737005	96 0 0 0	Galway FAX1
	Belgium	5746005	859	556005	120 0 0 0	Belgium FAX1

Table 72
CLID configuration

Site		Entry	HNTN	HLCL
HA group A1	Belleville	100	613	961
		101	613	967
	Ottawa	102	613	76
HA group A2	Toronto	150	905	863
HA group B1	Galway	200	91	73
	Belgium	201	859	55

Table 73
Access Code table

Site		Access Code — ZFDP				System Access Code	
		LOC	NPA	NXX	INTL	AC1	AC2
HA group A1	Belleville	6	61	9	601	99	66
	Ottawa	6	61	9	601		
HA group A2	Toronto	6	61	9	601	99	66
HA group B1	Galway	6	61	9	601	99	66
	Belgium	5	51	8	501		

Copyright © 2010 Nortel Networks. All Rights Reserved.

Table 74
VNR configuration table

RLI	DMI	ROUT
1 LTER = no	1 DEL = 0 INST = none CTYP = NCHG	1 SIP Route

Table 75
Route and Trunks configuration table

Description	ROUT	DCH	TN
SIP Route	1	24	200 0 0 0–200 0 0 31
PRI Route	100	15	15 0–15 23

Table 76
Trunk Steering Code configuration

Site	TSC	RLI	DMI	Description
Belleville	3439000	RLI = 2 Entry = 0 LTER = yes	DMI = 2 DEL = 0 INST = 99 CTYP = INTL	Insert AC1 to send to SPN table
Ottawa	399000	RLI = 2 Entry = 0 LTER = yes	DMI = 2 DEL = 0 INST = 99 CTYP = INTL	Insert AC1 to send to SPN table
Toronto	3339000	RLI = 2 Entry = 0 LTER = yes	DMI = 2 DEL = 0 INST = 99 CTYP = INTL	Insert AC1 to send to SPN table

Table 77
SPN configuration

Site	SPN-ARRN	RLI	DMI	Description
Belleville	1	99	DMI = 99 DEL = 0 INST = none CTYP = INTL	SIP ROUT to internal NRS
	343	6	DMI = 6 DEL = 7 INST = none CTYP = INTL	PRI ROUT 100 to PSTN
	343-9000	5	DMI = 5 DEL = 7 INST = 011 CTYP = INTL	PRI ROUT 100 to PSTN

Copyright © 2010 Nortel Networks. All Rights Reserved.

Site	SPN-ARRN	RLI	DMI	Description
	343-9001	6	DMI = 6 DEL = 7 INST = none CTYP = INTL	PRI ROUT 100 to PSTN
Ottawa	1	99	DMI = 99 DEL = 0 INST = none CTYP = INTL	SIP ROUT to internal NRS
	393	6	DMI = 6 DEL = 7 INST = none CTYP = INTL	PRI ROUT 101 to PSTN
	39-9000	5	DMI = 5 DEL = 7 INST = 011 CTYP = INTL	PRI ROUT 101 to PSTN
	39-90001	6	DMI = 6 DEL = 7 INST = none CTYP = INTL	PRI ROUT 101 to PSTN
Toronto	1	99	DMI = 99 DEL = 0 INST = none CTYP = INTL	SIP ROUT to internal NRS
	333	6	DMI = 6 DEL = 7 INST = none CTYP = INTL	PRI ROUT 150 to PSTN
	333-9000	5	DMI = 5 DEL = 7 INST = 011 CTYP = INTL	PRI ROUT 150 to PSTN
	333-90001	6	DMI = 6 DEL = 7 INST = none CTYP = INTL	PRI ROUT 150 to PSTN

Copyright © 2010 Nortel Networks. All Rights Reserved.

Terminology

Active/Inactive Call Server CPU
An active/inactive Call Server at a certain point in time

Call Server CPU
Call Servers that are in the HA Call Server pairs

Call Server CPU 0 or CPU 1
A physical Call Server that is configured specifically as CPU 0 or CPU 1

CDP
Coordinated Dialing Plan

DSC
Distant Steering Code

High Availability (HA)
High Scalability (HS) system
A collection of HA pairs in an HS solution

High Availability (HA) Group
An HA pair of Call Servers and all associated elements in an HS system.

High Availability (HA) Call Server pairs
Two Call Servers in an HA deployment that are part of an HS system.

IDC
Incoming Digit Conversion

NPA
(North America) Numbering Plan Area

Copyright © 2010 Nortel Networks. All Rights Reserved.

SBOC
Step Back On Congestion

SIP Media Gateway (SIPMG)
SIP Media Gateway without survivability

SIP Media Gateway Controller
SIP MG Controller

Survivable Media Gateway (SMG)
A traditional SMG contains a survivable Call Server that receives the database from the Primary Call Server. IP phones are redirected to the Primary Call Server.

Survivable SIP Media Gateway (Survivable SIP Media GW)
SIP Media Gateway with survivability

TSC
Trunk Steering Code

UDP
Uniform Dialing Plan

VNR
Vacant Number Routing

ZBD
Zone Based Dialing

Copyright © 2010 Nortel Networks. All Rights Reserved.

Nortel Communication Server 1000

Communication Server 1000E Planning and Engineering — High Scalability Solutions

Release: 7.0
Publication: NN43041-221
Document revision: 01.01
Document release date: 4 June 2010

Copyright © 2010 Nortel Networks. All Rights Reserved.

While the information in this document is believed to be accurate and reliable, except as otherwise expressly agreed to in writing NORTEL PROVIDES THIS DOCUMENT "AS IS" WITHOUT WARRANTY OR CONDITION OF ANY KIND, EITHER EXPRESS OR IMPLIED. The information and/or products described in this document are subject to change without notice.

Nortel, Nortel Networks, the Nortel logo, and the Globemark are trademarks of Nortel Networks.

All other trademarks are the property of their respective owners.

To provide feedback or to report a problem in this document, go to www.nortel.com/documentfeedback.

www.nortel.com