Nortel Communication Server 1000

Fiber Remote IPE Fundamentals

Release: 7.0
Document Revision: 04.01

www.nortel.com

NN43021-554

Nortel Communication Server 1000
Release: 7.0
Publication: NN43021-554
Document release date: 4 June 2010

Copyright © 2007-2010 Nortel Networks. All Rights Reserved.

While the information in this document is believed to be accurate and reliable, except as otherwise expressly agreed to in writing NORTEL PROVIDES THIS DOCUMENT "AS IS" WITHOUT WARRANTY OR CONDITION OF ANY KIND, EITHER EXPRESS OR IMPLIED. The information and/or products described in this document are subject to change without notice.

Nortel, Nortel Networks, the Nortel logo, and the Globemark are trademarks of Nortel Networks.

All other trademarks are the property of their respective owners.

Contents

New in this release 7
Other changes 7

How to get help 9
Getting help from the Nortel Web site 9
Getting help over the telephone from a Nortel Solutions Center 9
Getting help from a specialist by using an Express Routing Code 10
Getting help through a Nortel distributor or reseller 10

Introduction 11
Subject 11
Applicable systems 11
Intended audience 12
Conventions 12
NTP feedback 13
Related information 13
Related NTPs 13

Product description 15
Navigation 15
Introduction 15
System overview 15
Physical architecture 16
Functional architecture 20
Functional description 23
Fiber Superloop Network card 24
Fiber Peripheral Controller card 28
Engineering guidelines 32
Fiber Remote IPE capacity 33
Engineering the fiber-optic link 34
System planning and ordering 38
System selection 39
Fiber Remote IPE site planning 39
Software requirements 43

Copyright © 2007-2010 Nortel Networks. All Rights Reserved.

Equipment installation and configuration 45

Navigation 45
Introduction 45
System overview 45
Pre-installation preparation 47
- Preparing the site 47
- Unpacking and inspection 48
- Taking inventory 48
- Installing the fiber-optic link 48
- Selecting the Fiber Superloop Network card slot 50

Fiber-optic equipment installation 52
- Installing and verifying system operation 52
- Installing the Fiber Superloop Network card 52
- Installing fiber-optic patchcords 54
- Installing system monitor and TTY cables 55
- Connecting the fiber-optic link to the local system 60

Floor-standing column Fiber Remote IPE installation 60
- Installing the floor-standing column 61
- Installing cards in the Remote IPE module 61
- Installing fiber-optic patchcords 63
- Installing system monitor and TTY cables 64
- Connecting the fiber-optic link to the Remote IPE module 67

Wall-mounted Fiber Remote IPE installation 68
- Installing the wall-mounted cabinet 68
- Installing cards in the wall-mounted cabinet 71
- Connecting fiber-optic link to the wall-mounted cabinet 72
- Connecting TTY and subscriber loop cables 75
- Connecting attendant console power cord to the wall-mounted Fiber Remote IPE 77
- Connecting PFTU to the wall-mounted Fiber Remote IPE 78

Configuring the Fiber Remote IPE 79
- Configuring fiber-optic cards 80
- Configuring the system monitor address for a wall-mounted cabinet 81
- Defining the loadware 82
- Configuring the MMI port 83

Acceptance testing 85

Navigation 85
Overview 85
Checking the system 86
Setting up test conditions 86
Performing acceptance testing 87
- Voice calls 87

Copyright © 2007-2010 Nortel Networks. All Rights Reserved.

Checking the MMI terminal operation 89
Checking link protection switching 90
Removing the test setup 91
Generating traffic reports 92

Maintenance 93

Navigation 93
Overview 93
Diagnostic tools 94
Hardware diagnostic tools 94
Software diagnostic tools 98
Using maintenance programs 103
Logging in on the maintenance terminal 103
Accessing the program 104
Responding to error messages 104
Exiting the program 104
Logging out 104
Logging in and using a maintenance telephone 104
Isolating and correcting faults 106
Types of faults 106
Fault isolation steps 106
Fault isolation and correction 108
Fiber Remote IPE fault isolation and correction 110
Fiber Superloop Network card fault isolation and correction 111
Fiber Peripheral Controller card fault isolation and correction 118
Fault isolation and correction using MMI maintenance commands 122
Replacing Fiber Remote IPE cards 125
Unpacking and inspecting replacement cards 126
Removing and replacing a card 126
Packing and shipping defective cards 130

System messages and MMI commands description 131

Copyright © 2007-2010 Nortel Networks. All Rights Reserved.

Copyright © 2007-2010 Nortel Networks. All Rights Reserved.

New in this release

There are no new features introduced with this release.

Other changes

Date	Description
June 2010	Standard 04.01. This document is up-issued to support Communication Server 1000 Release 7.0.
May 2009	Standard 03.01. This document is up-issued to support Communication Server 1000 Release 6.0.
December 2007	Standard 02.01 This document is up-issued to support CS 1000 Release 5.5.
July 2007	Standard 01.02. This document is up-issued to address CR Q01724201.
May 2007	Standard 01.01. This document is issued to support Communication Server 1000 Release 5.0. This document contains information previously contained in the following legacy document now retired: Fiber Remote IPE (553-3021-354). No new content has been added for Communication Server 1000 Release 5.0. All references to Communication Server 1000 Release 4.5 are applicable to Communication Server 1000 Release 5.0.
December 2006	Standard 5.00. This document is up-issued to support Communication Server 1000 Release 4.5. This document addresses CR Q01512339. Added the Laser and LED warnings to the Introduction and Installing the Fiber Superloop Network card sections.
September 2006	Standard 4.00. This document is up-issued to support Communication Server Release 4.5. This document addresses CR Q01230034.
August 2005	Standard 3.00. This document is up-issued to support Communication Server 1000 Release 4.5.
September 2004	Standard 2.00. This document is up-issued for Communication Server 1000 Release 4.0.
October 2003	Standard 1.00. This document is a new NTP for Succession 3.0. It was created to support a restructuring of the Documentation Library. This document contains information previously contained in the following legacy document, now retired: *Fiber Remote IPE: Description, Installation, and Maintenance* (553-3001-020).

Copyright © 2007-2010 Nortel Networks. All Rights Reserved.

Copyright © 2007-2010 Nortel Networks. All Rights Reserved.

How to get help

This chapter explains how to get help for Nortel products and services.

Getting help from the Nortel Web site

The best way to get technical support for Nortel products is from the Nortel Technical Support Web site:

www.nortel.com/support

This site provides quick access to software, documentation, bulletins, and tools to address issues with Nortel products. From this site, you can:

- download software, documentation, and product bulletins
- search the Technical Support Web site and the Nortel Knowledge Base for answers to technical issues
- sign up for automatic notification of new software and documentation for Nortel equipment
- open and manage technical support cases

Getting help over the telephone from a Nortel Solutions Center

If you do not find the information you require on the Nortel Technical Support Web site, and you have a Nortel support contract, you can also get help over the telephone from a Nortel Solutions Center.

In North America, call 1-800-4NORTEL (1-800-466-7835).

Outside North America, go to the following Web site to obtain the telephone number for your region:

www.nortel.com/callus

Copyright © 2007-2010 Nortel Networks. All Rights Reserved.

Getting help from a specialist by using an Express Routing Code

To access some Nortel Technical Solutions Centers, you can use an Express Routing Code (ERC) to quickly route your call to a specialist in your Nortel product or service. To locate the ERC for your product or service, go to:

www.nortel.com/erc

Getting help through a Nortel distributor or reseller

If you purchased a service contract for your Nortel product from a distributor or authorized reseller, contact the technical support staff for that distributor or reseller.

Copyright © 2007-2010 Nortel Networks. All Rights Reserved.

Introduction

This document is a global document. Contact your system supplier or your Nortel representative to verify that the hardware and software described are supported in your area.

Subject

This Nortel technical publication (NTP) provides information specific to the implementation of the Fiber Remote Intelligent Peripheral Equipment (IPE) service.

It describes the operation of the fiber-optic equipment and provides specific information on how to install and maintain this equipment as an integral part of a system. Fiber Remote IPE configuration procedures are identical to the equivalent non-fiber equipment. However, there are some additional software commands that can be executed using the Man-Machine Interface (MMI) terminal to specifically control fiber-optic equipment.

Note on legacy products and releases

This NTP contains information about systems, components, and features that are compatible with Nortel Communication Server 1000 Release 4.5 software. For more information on legacy products and releases, click the **Technical Documentation** link under **Support & Training** on the Nortel home page:

www.nortel.com

Applicable systems

This document applies to the following systems:

- Communication Server 1000M Half Group (CS 1000M HG)
- Communication Server 1000M Single Group (CS 1000M SG)
- Communication Server 1000M Multi Group (CS 1000M MG)
- Meridian 1 PBX 51C
- Meridian 1 PBX 61C

Copyright © 2007-2010 Nortel Networks. All Rights Reserved.

- Meridian 1 PBX 81
- Meridian 1 PBX 81C

Note: When upgrading software, memory upgrades may be required on the Signaling Server, the Call Server, or both.

System migration

When particular Meridian 1systems are upgraded to run CS 1000 Release 4.5 software and configured to include a Signaling Server, they become CS 1000M systems. Table 1 "Meridian 1 systems to CS 1000M systems" (page 12) lists each Meridian 1 system that supports an upgrade path to a CS 1000M system.

Table 1
Meridian 1 systems to CS 1000M systems

This Meridian 1 system...	Maps to this CS 1000M system
Meridian 1 PBX 51C	CS 1000M Half Group
Meridian 1 PBX 61C	CS 1000M Single Group
Meridian 1 PBX 81	CS 1000M Multi Group
Meridian 1 PBX 81C	CS 1000M Multi Group

For more information, see *CS 1000M and Meridian 1 Large System Upgrades Overview (NN43021-458)* ().

Intended audience

This document is intended for individuals who are responsible for installing and maintaining the Fiber Remote IPE service as part of a CS 1000M Large Systemor Meridian 1 Large System.

Conventions

Terminology

The following systems are referred to generically as "Large System":

- Communication Server 1000M Half Group (CS 1000M HG)
- Communication Server 1000M Single Group (CS 1000M SG)
- Communication Server 1000M Multi Group (CS 1000M MG)
- Meridian 1 PBX 51C
- Meridian 1 PBX 61C
- Meridian 1 PBX 81
- Meridian 1 PBX 81C

Copyright © 2007-2010 Nortel Networks. All Rights Reserved.

NTP feedback

Nortel strives to provide accurate documentation for our customers. However, if you feel there are errors or omissions in this document, your feedback is welcome.

Send comments by e-mail to gntsdoc@nortel.com or open a problem report through the normal procedures.

Please provide as much information as possible including the NTP number, standard version and date of the document, as well as the page, problem description, and any supporting documentation and capture files.

Related information

Related NTPs

This section lists information sources that relate to this document.

NTPs

The following NTPs are referenced in this document:

- *Circuit Card Reference (NN43001-311)* ()
- *Features and Services Fundamentals (NN43001-106)* ()
- *Software Input Output: Administration (NN43001-611)* ()
- *Telephones and Consoles Fundamentals (NN43001-567)* ()
- *Communication Server 1000M and Meridian 1 Large System Planning and Engineering (NN43021-220)* ()
- *Communication Server 1000M and Meridian 1 Large System Installation and Commissioning (NN43021-310)* ()
- *Communication Server 1000M and Meridian 1 Large System Maintenance (NN43021-700)* ()

Online

To access Nortel documentation online, click the **Technical Documentation** link under **Support & Training** on the Nortel home page:

www.nortel.com

CD-ROM

To obtain Nortel documentation on CD-ROM, contact your Nortel customer representative.

Copyright © 2007-2010 Nortel Networks. All Rights Reserved.

Copyright © 2007-2010 Nortel Networks. All Rights Reserved.

Product description

Navigation

This section contains information on the following topics:

“Introduction” (page 15)

“System overview” (page 15)

“Functional description” (page 23)

“Engineering guidelines” (page 32)

“System planning and ordering” (page 38)

Introduction

This section describes Fiber Remote Intelligent Peripheral Equipment (IPE), its architecture, and its hardware options. It also describes how to plan and engineer a fiber-optic link.

CAUTION
Use of controls or adjustments, or performance of procedures other than those specified herein may result in hazardous radiation exposure.

CAUTION
When working with fiber-optic cables, it is necessary to adhere to standard precautions used for optical fibers. Before handling optical fibers, take necessary training and become certified in working with fiber-optic cables.

System overview

CS 1000M Large Systems and Meridian 1 Large Systems are Private Branch Exchanges (PBX) that link local subscribers to private and public networks and provide many functions and features.

Copyright © 2007-2010 Nortel Networks. All Rights Reserved.

Large Systems can also support remote subscribers. To do this, these systems can be configured in a distributed system, using Remote IPE modules or small cabinets. Fiber-optic links are used to connect the Remote IPE modules and small cabinets to the PBXs.

In a distributed system, subscriber connections are the same at local IPE modules as they are at Remote IPE modules or small cabinets. Furthermore, because Remote IPE equipment uses common and network equipment from the local system, subscriber functions and features are the same at local and remote sites.

This document focuses on the system and Remote IPE equipment specifically designed to provide fiber-optic links between network functions in the local system and peripheral controller functions in the Remote IPE.

Physical architecture

To configure a system with Fiber Remote IPE, install a floor-standing column or wall-mounted cabinet at a remote site and connect it using fiber-optic links to an existing local system.

System equipment specifically designed to support the fiber-optics interface is as follows:

- an NT1P61 Fiber Superloop Network card, which is housed in a local system network card slot
- an NT1P62 Fiber Peripheral Controller card, which is housed in the Remote IPE module or cabinet
- NT1P63 Electro-optical interface packlets, installed onto the Fiber Superloop Network card and the Fiber Peripheral Controller card to provide a fiber-optic link between the local system and Remote IPE
- an optional NT1P63 Electro-optical interface packlet at each site to provide a redundant fiber-optic link
- an NT1P70 wall-mounted cabinet for the remote site
- NT1P75AA fiber-optic patchcords, one for each Electro-optical packlet
- NT1P79AA fiber-optic cable between the fiber management frame and the Fiber Peripheral Controller in the wall-mounted cabinet and the floor-standing column
- NT1P76AA cable connecting the Fiber Superloop Network card to the I/O panel and providing Serial Data Interface (SDI) and system monitor ports
- NT1P78AA cable connecting the Fiber Peripheral Controller card to the I/O panel and providing TTY and system monitor ports

Copyright © 2007-2010 Nortel Networks. All Rights Reserved.

Figure 1 "Local system to Remote IPE fiber-optic links" (page 17) illustrates a Large Systemand Remote IPE equipment linked with fiber-optic cables. The only equipment specifically designed to support this configuration are the cards and the cabinet listed above.

Figure 1
Local system to Remote IPE fiber-optic links

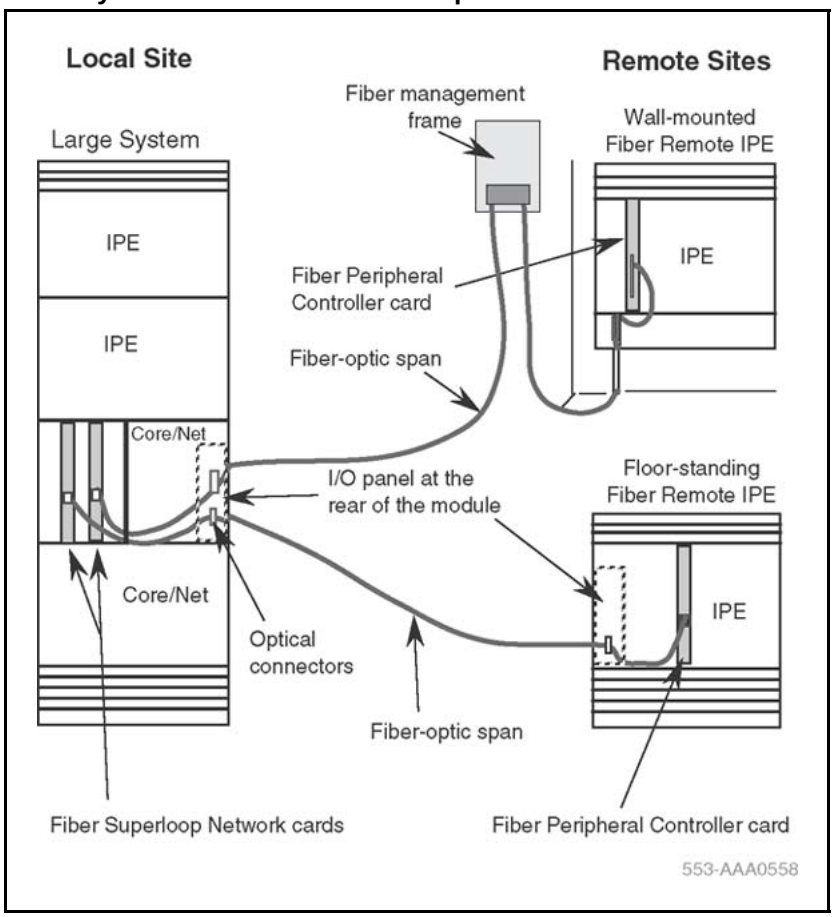

At the local site, fiber-optic cables contain fiber-optic connectors mounted on the I/O panel connector slots at the rear of the network module. At the remote site, fiber-optic cable connectors are also installed on the I/O panel connector slots at the rear of the floor-standing Remote IPE module. For the wall-mounted Remote IPE cabinet, the fiber-optic link cable from the fiber management frame is connected directly to the FC/PC fiber-optic connectors of the Electro-optical packlets located on the Fiber Peripheral Controller card.

Subscriber loops at the Remote IPE are connected to 50-pin connectors on the I/O panel at the rear of the module or at the bottom front of the cabinet. For more details about subscriber connections to the local system and the Remote IPE, refer to *Communication Server 1000M and Meridian 1 Large System Installation and Commissioning (NN43021-310)* ().

Copyright © 2007-2010 Nortel Networks. All Rights Reserved.

Select one of two options for the Remote IPE enclosure:

- floor-standing Remote IPE module
- wall-mounted Remote IPE cabinet

Floor-standing Remote IPE

The floor-standing Remote IPE comprises a pedestal, one or more IPE modules, and a top cap. The IPE module houses a maximum of 16 line cards and a Fiber Peripheral Controller card. The communication and signaling between the local system Central Processing Unit (CPU) and the Fiber Peripheral Controller card Micro Processing Unit (MPU) is performed over the fiber-optic link. The fiber-optic link also transmits voice and data information originating and terminating at Remote IPE subscriber stations.

Figure 2 "Floor-standing Fiber Remote IPE column" (page 18) illustrates the front view of the floor-standing Remote IPE column with the cross section of the rear of the module showing the I/O panel. The front view shows the location of the Fiber Peripheral Controller card and the fiber-optic cables that connect the fiber-optic interface on the Fiber Peripheral Controller to the optical I/O panel at the rear of the IPE module.

Figure 2
Floor-standing Fiber Remote IPE column

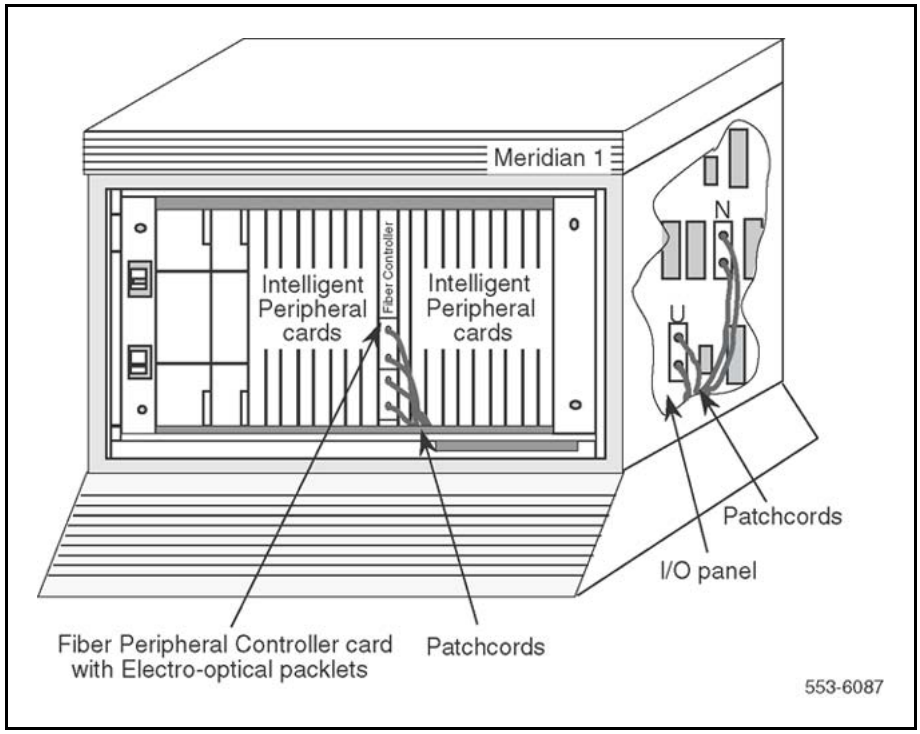

Copyright © 2007-2010 Nortel Networks. All Rights Reserved.

Wall-mounted Remote IPE cabinet

The NT1P70 main is a wall-mounted Remote IPE cabinet that houses a maximum of 10 line cards and a Fiber Peripheral Controller card. The communication and signaling between the local system CPU and the Fiber Peripheral Controller card MPU is performed over the fiber-optic link. The fiber-optic link also transmits voice and data information originating and terminating at the Remote IPE subscriber stations.

To expand the number of line cards from 10 to 16, use the first six card slots in the NTAK12 expansion cabinet. Card slots 7 through 12 in the expansion cabinet are not configurable and must not be used. The expansion cabinet is connected to the Fiber Peripheral Controller card housed in the main cabinet with a cable. This allows the Fiber Peripheral Controller card to control the line cards in both cabinets.

Wall-mounted main and expansion cabinets can be AC- or DC-powered. The power source is directly connected to the shelf power supply for the AC-powered system and to the shelf power converter for the DC-powered system.

Figure 3 "Wall-mounted Remote IPE cabinet" (page 20) illustrates the front view of the NT1P70 wall-mounted Remote IPE cabinet. It shows the location of the Fiber Peripheral Controller card and the Electro-optical packlet on the Fiber Peripheral Controller card. A blank packlet is used in the lower packlet position of the Fiber Peripheral Controller faceplate for a nonredundant link configuration in both the floor-standing IPE module and the wall-mounted cabinet.

Copyright © 2007-2010 Nortel Networks. All Rights Reserved.

Figure 3
Wall-mounted Remote IPE cabinet

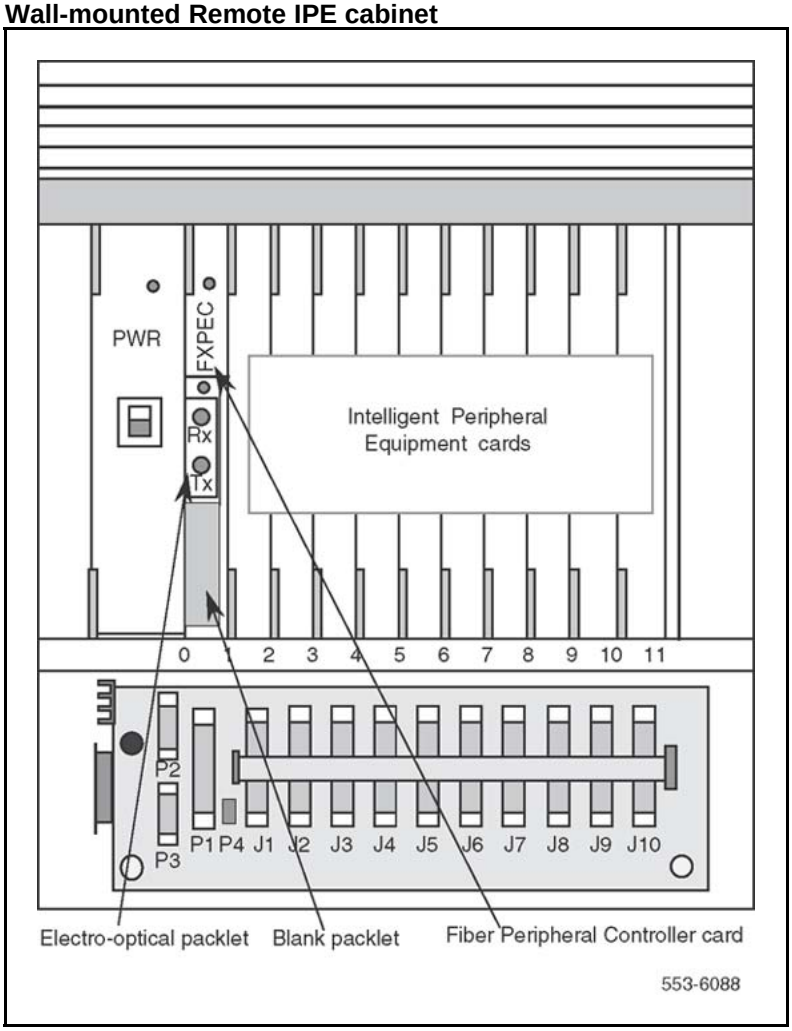

Functional architecture

Fiber Remote IPE functions are controlled by the local system CPU and the firmware in the Fiber Superloop Network and Fiber Peripheral Controller cards. The CPU uses software instructions to execute call processing, administration, and diagnostic functions. These functions can be divided into three basic categories:

- CPU functions
- Network functions
- IPE functions

Figure 4 "Functional architecture" (page 21) illustrates the system functional architecture in a broad block diagram to show the three basic types of functions and system modules supporting these functions.

Copyright © 2007-2010 Nortel Networks. All Rights Reserved.

Figure 4
Functional architecture

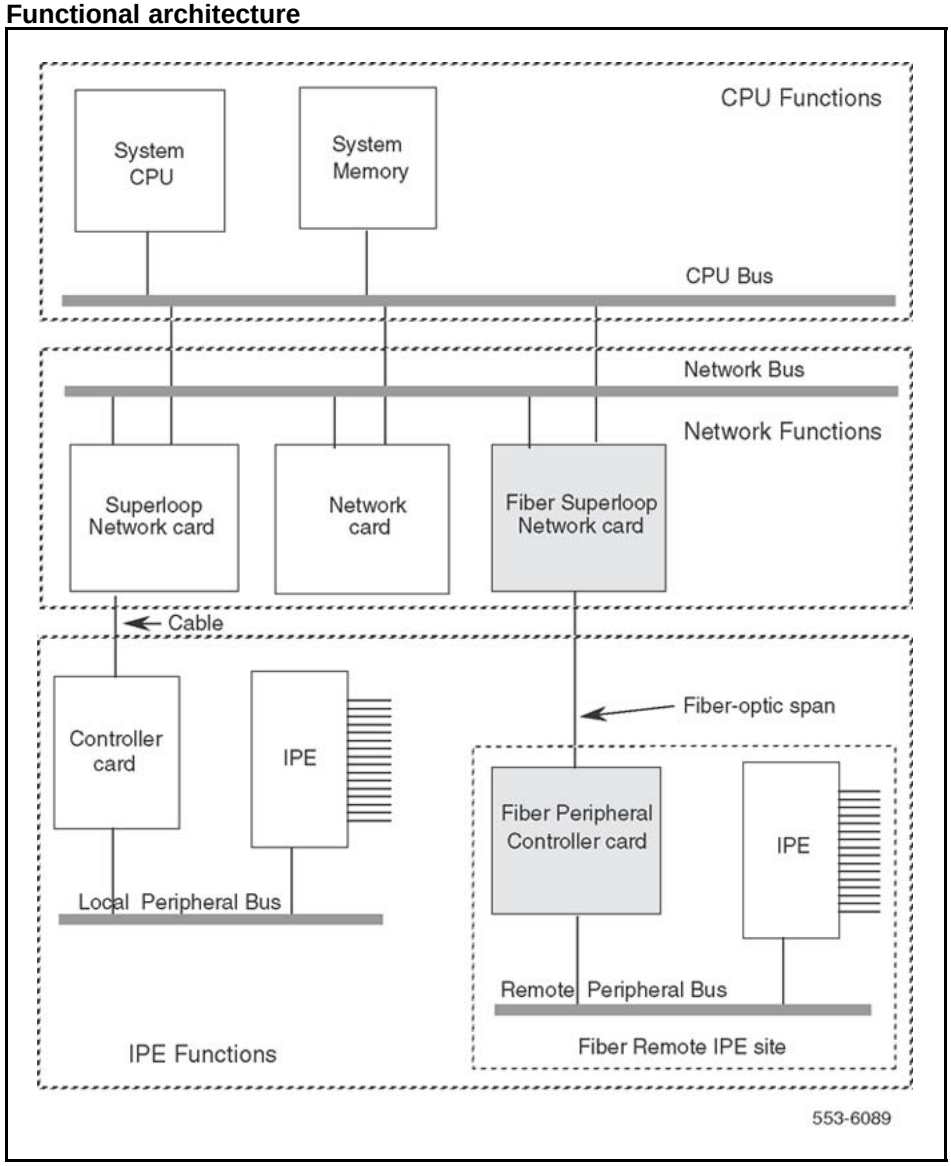

CPU functions

CPU functions are executed by the system software in the CPU module, which is normally located at the bottom of the system column. The CPU responds to the interrupt requests from the network equipment and the IPE, and performs the following functions:

- controls call origination, call termination, and feature operation for switched voice and data calls
- executes system administration and configuration functions

Copyright © 2007-2010 Nortel Networks. All Rights Reserved.

- coordinates system diagnostic activities
- controls system utility functions such as software loading, initialization, data dumping, traffic logging, and system auditing

Even though the Remote IPE is removed from the local system, the local system CPU controls its functions the same way it controls functions of local IPE modules.

Network functions

Network switching functions are executed by equipment housed in the local network card slots. The Fiber Superloop Network card is installed in a network card slot. Through its fiber-optic link, it connects to the Fiber Peripheral Controller card in the Remote IPE module or cabinet.

These network functions do the following:

- perform hardware initialization and self-test upon power up
- establish call connections between the stations connected to Remote IPE line cards and stations local to the system or to trunks for long distance trunk calls over public or private networks
- communicate switching, peripheral signaling, and maintenance information to and from the CPU and the Peripheral Controller MPU
- monitor fiber-optic link integrity and transmission quality and provide automatic link switching from the failed primary link to the redundant link
- provide local and remote loopback testing and fault isolation functions

IPE functions

IPE functions are performed by the Fiber Peripheral Controller card and line cards in the Remote IPE module or cabinet

These IPE functions do the following:

- perform hardware initialization and self-test upon Fiber Peripheral Controller power-up
- assign timeslots to line cards to establish call connections
- communicate with the Fiber Superloop Network card MPU to provide Remote IPE configuration and maintenance functions
- Monitor fiber-optic link integrity and transmission quality and provide automatic link switching from the failed primary link to the redundant link on the Remote IPE side.
- Provide Card-LAN management by polling IPE cards and reporting their status.

Copyright © 2007-2010 Nortel Networks. All Rights Reserved.

- Control local stations' ringing functions.
- Provide a serial port for local configuration and maintenance functions.
- Provide local and remote loopback testing and fault isolation functions.

Functional description

The local system is controlled by the CPU. The CPU performs read/write functions on the network control and status registers, and communicates with the network equipment over the CPU bus. Through these messages, the CPU monitors the system's status, provides call connection sequences, monitors traffic activities, downloads application software and configuration data, and performs system administration and diagnostics.

Fiber Remote IPE utilizes fiber-optic links to provide the same subscriber functionality at the remote site as at the local site.

Figure 5 "Fiber Remote architecture" (page 24) illustrates the Fiber Remote architecture. It shows the Fiber Superloop Network card, the Fiber Peripheral Controller card, and the internal bus structure that connects them to other system components.

Figure 5 "Fiber Remote architecture" (page 24) also describes the Electro-optical packlet to provide an understanding of the internal system communication and call-processing activities through the fiber-optic link.

Copyright © 2007-2010 Nortel Networks. All Rights Reserved.

Figure 5
Fiber Remote architecture

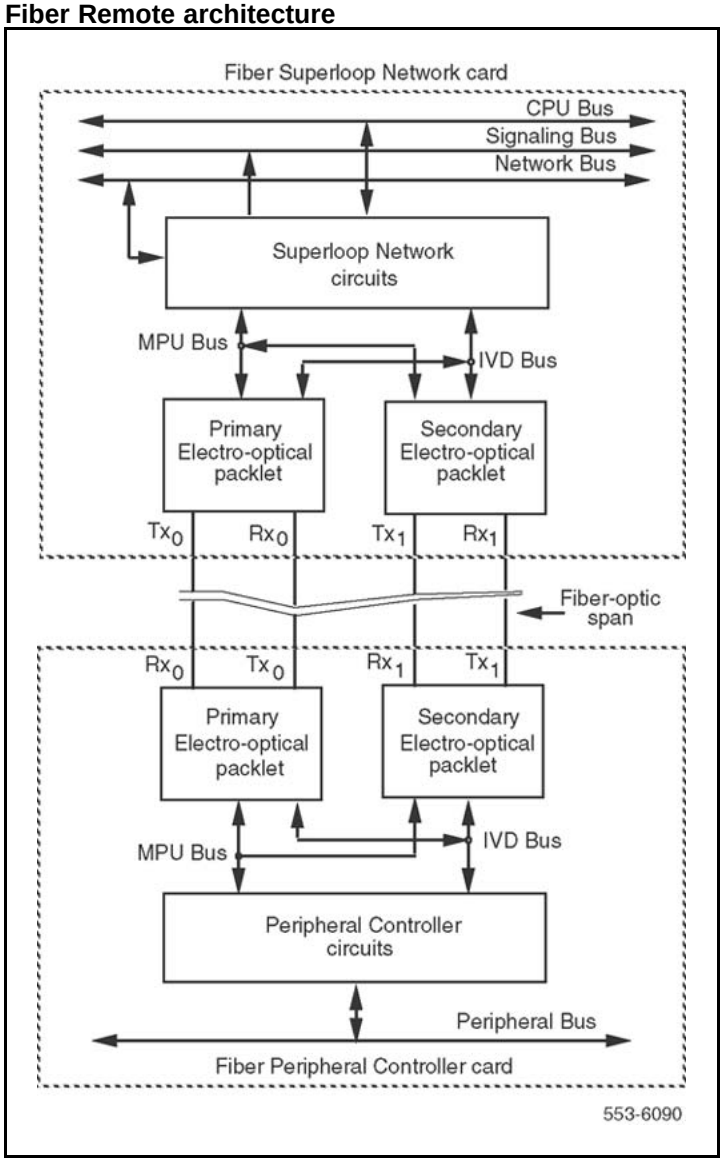

Fiber Superloop Network card

The NT1P61 Fiber Superloop Network card is a microprocessor-controlled network interface between the local system CPU and the remote intelligent peripheral equipment. To communicate with the CPU, it uses the network, the signaling, and the CPU buses located in the local network module.

The Fiber Superloop Network card occupies one network card slot and supports 4 network loops or 128 timeslots; 8 for signaling and 120 for voice and data transmission with the Fiber Peripheral Controller card. The

Copyright © 2007-2010 Nortel Networks. All Rights Reserved.

Electro-optical packlet mounted on the Fiber Superloop Network and Fiber Peripheral Controller cards provide a dedicated link between these two cards.

The main Fiber Superloop Network card performs the following functions:

- provides a single or a redundant dedicated optical link to connect the Remote IPE to the local system
- assigns any network timeslot to any timeslot available on the fiber-optic link to support intelligent peripheral equipment timeslot assignments
- supports eight signaling channels for Common Channel Signaling (CCS) in servicing Scan and Signal Distributor (SSD) messages, card maintenance, and card enable messages
- provides an interface for system power and alarm monitoring
- provides an interface for a maintenance port
- provides continuity test pattern generation and detection for loopback testing
- performs diagnostic self-tests during power-up and when requested by the CPU

Figure 6 "Fiber Superloop Network card functional block diagram" (page 26) shows the Fiber Superloop Network card block diagram illustrating major functional blocks.

Copyright © 2007-2010 Nortel Networks. All Rights Reserved.

Figure 6
Fiber Superloop Network card functional block diagram

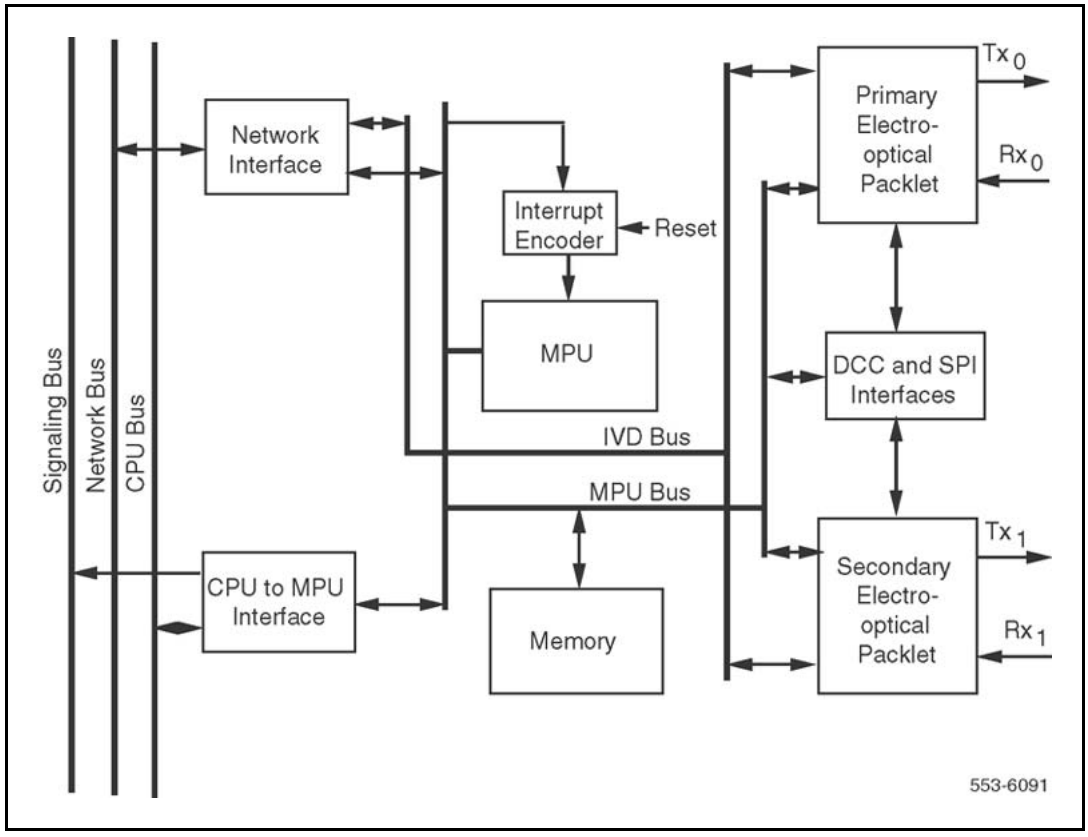

Micro Processing Unit

The Micro Processing Unit (MPU) coordinates and controls data transfer and the addressing of peripheral devices, and communicates with the local system CPU using a message channel on the CPU bus. The tasks the MPU performs depend on the interrupts it receives. These interrupts are prioritized by the importance of the tasks they control.

The MPU is highly integrated and provides most of the decision-making logic on the chip. These include controllers, timers, control and arbitration logic, address decoding, dual port RAM and independent direct memory access, parallel input/output ports, and three independent full duplex serial communication channels that support various protocols and a synchronous SPI interface.

The MPU can be reset by:

- powering up the Fiber Superloop Network card
- the watchdog timer

Copyright © 2007-2010 Nortel Networks. All Rights Reserved.

- the ENB/DIS switch
- the local system CPU command

Memory

The Fiber Superloop Network memory stores programs and data for the following functions in the following locations:

- Boot code and self-test code are stored in the EPROM.
- Data is stored in the RAM.
- The main function code is stored in the Fiber Superloop Network card FLASH memory.
- Data containing the Fiber Superloop Network card identification and version is stored in the EEPROM.

CPU to MPU bus interface

Information exchange between the local system CPU and the Fiber Superloop Network MPU is performed with packetized messages transmitted over the CPU bus.

This interface uses shared Static Random Access Memory (SRAM) as a communication exchange point between the CPU and the MPU. Both the CPU and the MPU can access this memory over the transmit and receive channels on the CPU bus.

Network bus interface

The network bus interface performs two major functions:

- converts bit interleaved serial data received from the network bus into byte interleaved data for transmission over the 128 timeslots used by the IVD bus.
- accepts byte-interleaved data transmitted from the IVD bus and converts it into a bit-interleaved data stream for transmission over the network bus.

Fiber-optic interface

Two NT1P63 Electro-optical packlets can be installed on each Fiber Superloop Network card to provide redundant fiber-optic interfaces, or the Fiber Superloop Network card can be equipped with only one Electro-optical packlet for a non-redundant link. The fiber-optic interface provides a 155.52 Mbps point-to-point transmission facility.

Copyright © 2007-2010 Nortel Networks. All Rights Reserved.

The fiber-optic interface performs the following functions:

- connects the local system to Remote IPE using a dedicated single mode fiber-optic link
- provides a synchronous communication channel between the Fiber Superloop Network card MPU and the Fiber Peripheral Controller card MPU
- uses one or, optionally, two Electro-optical packlets installed on the Fiber Superloop Network card to provide redundant fiber-optic links
- uses buffers and transceivers to extend the MPU data, address, and control buses to the Electro-optical packlet
- provides Electro-optical packlet version identification, which is stored in the packlet's EEPROM
- monitors transmission quality of the fiber-optic link; if the transmission is degraded or fails, the Fiber Superloop Network card automatically transfers to the redundant link, if equipped

Fiber Peripheral Controller card

The NT1P62 Fiber Peripheral Controller card is a microprocessor-controlle d peripheral interface between the Fiber Superloop Network card and the Remote IPE line cards. To communicate with the Fiber Superloop Network card, the Fiber Peripheral Controller card uses the Electro-optical interface and the fiber-optic link. To communicate with the intelligent peripheral equipment, the Fiber Peripheral Controller uses 16 full duplex serial loops, one for each line card in the IPE module.

The Fiber Peripheral Controller card occupies one card slot in the IPE module. The adjacent card slot is not the full width and must remain empty; however, a dummy faceplate should be installed in this empty card slot to provide a better air flow between cards. This is necessary because a non-fiber Peripheral Controller card occupies two card slots in the IPE module and the Fiber Peripheral Controller card that plugs into the same card slot occupies only one card slot. The dummy faceplate is used in the floor-standing IPE module but is not necessary in the wall-mounted IPE cabinet.

The main Fiber Peripheral Controller card performs the following functions:

- provides a single or redundant dedicated optical link to connect the Remote IPE to the local system
- assigns any of the 120 timeslots on the fiber-optic link to any timeslot of the 16 full duplex serial loops assigned to line cards in the IPE module

Copyright © 2007-2010 Nortel Networks. All Rights Reserved.

- converts the SSD-type signaling format received from the Fiber Superloop Network card to the signaling format for digital telephones, and from digital telephones format to SSD-type format
- polls telephones to determine the set type and its signaling protocol and transmits this information to the Fiber Superloop Network card
- supports CCS protocol between the Fiber Superloop Network and the Fiber Peripheral Controller cards
- provides an interface for a maintenance network interface
- provides a Card-LAN network interface
- provides continuity test and line card polling, enabling, and disabling
- provides an interface for system power and alarm monitoring
- performs diagnostic self-tests during power-up and when requested by the CPU

Figure 7 "Fiber Peripheral Controller card functional block diagram" (page 30) shows the block diagram of the Fiber Peripheral Controller card which illustrates major functional blocks. Functions of these blocks are described below.

Copyright © 2007-2010 Nortel Networks. All Rights Reserved.

Figure 7
Fiber Peripheral Controller card functional block diagram

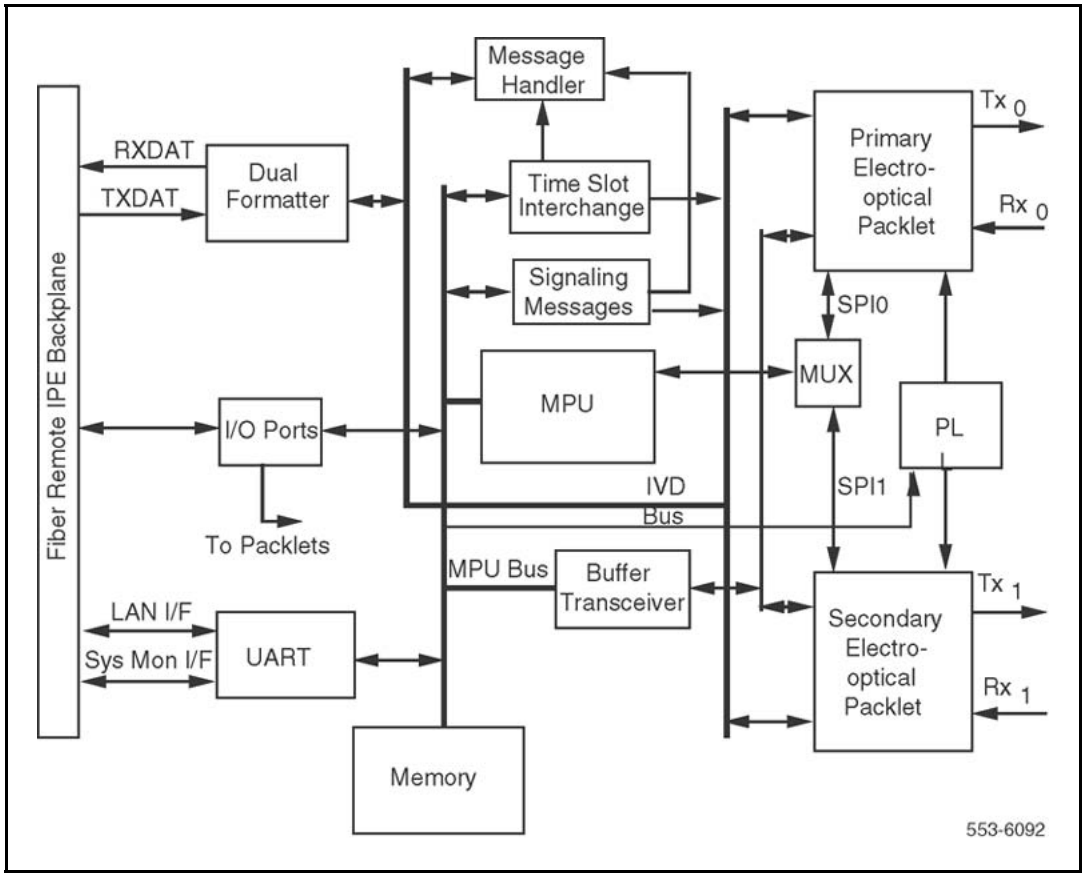

Micro Processing Unit

The Micro Processing Unit (MPU) coordinates and controls data transfer and the addressing of peripheral devices and communicates with the Fiber Superloop Network card using serial communication channels. In addition, the MPU has a special communication channel used to communicate with the microcontroller on one Electro-optical packlet at a time. The tasks the MPU performs depend on the interrupts it receives. These interrupts are prioritized by the importance of tasks they control.

The MPU is highly integrated and provides most of the decision-making logic on the chip. Functions on the MPU include controllers, timers, control logic, address decoding, dual-port RAM and independent direct memory access, parallel input/output ports, and three independent full duplex serial communication channels that support various protocols.

The MPU can be reset by:

- powering up the Fiber Peripheral Controller card
- the watchdog timer

Copyright © 2007-2010 Nortel Networks. All Rights Reserved.

Memory

The Fiber Peripheral Controller memory stores programs and data for the following functions in the following locations:

- Boot code and self-test code are stored in the EPROM.
- Data is stored in the RAM.
- The main MPU function code is stored in the Fiber Peripheral Controller card FLASH memory.
- Data containing the Fiber Peripheral Controller card identification and version is stored in the EEPROM.

Card-LAN interface

To implement the Card-LAN interface, the Fiber Peripheral Controller card uses a dual Universal Asynchronous Receiver-Transmitter (UART) device. One UART channel provides a serial communication interface to IPE cards.

The Card-LAN is a 19.2 kbps asynchronous interface. It is used to poll and communicate with IPE cards through the Fiber Peripheral Controller to transmit maintenance messages, which include:

- LED control of the IPE card enable/disable
- peripheral card configuration
- peripheral card type and version information

IPE interface

The IPE interface links IPE cards to the Fiber Peripheral Controller MPU using sixteen DS-30X loops, one for each IPE card. It contains the following Fiber Peripheral Controller circuits:

- Dual formatter that transforms serial peripheral loop information into parallel Integrated Voice and Data (IVD) bus information and parallel IVD bus information to serial peripheral loop information.
- Message handler that performs channel-associated signaling to and from the IPE cards. It receives signaling information from the IPE cards; then the MPU accesses this information, interprets it, and sends it to the Fiber Superloop Network in the appropriate format. From the Fiber Superloop Network, the signaling messages are received and interpreted by the Fiber Peripheral Controller MPU and sent to the serial peripheral loops in the appropriate format.
- Timeslot interchange that provides the correspondence between the 120 voice and data timeslots on the fiber-optic link and the 640

Copyright © 2007-2010 Nortel Networks. All Rights Reserved.

timeslots on the IVD bus. The timeslots on the IVD bus correspond directly to the peripheral line card loops.

- Common channel signaling that handles the SSD signaling to and from the Fiber Superloop Network card. It receives signaling packets from Fiber Superloop Network, checks for CRC errors, strips start/stop bits and sends the rest of data to the Fiber Peripheral Controller MPU for processing. It also processes the signaling information in the opposite direction by receiving the messages from the MPU, adds CRC and start/stop bits, and transmits these as SSD messages to the Fiber Superloop Network over the fiber-optic link.

Fiber-optic interface

Two NT1P63 Electro-optical packlets can be installed on each Fiber Peripheral Controller card to provide redundant fiber-optic interfaces. The Fiber Peripheral Controller card can be equipped with only one Electro-optical packlet for a nonredundant link operation. The fiber-optic interface provides a 155.52 Mbps point-to-point transmission facility.

The fiber-optic interface performs the following functions:

- connects the local system to Remote IPE using a dedicated single mode fiber-optic link
- provides a synchronous communication channel between the Fiber Superloop Network card MPU and the Fiber Peripheral Controller card MPU
- uses buffers and transceivers to extend the MPU data, address, and control buses to the Electro-optical packlet
- uses one or, optionally, two Electro-optical packlets installed on the Fiber Peripheral Controller card to provide redundant fiber-optic links
- provides Electro-optical packlet version identification, which is stored in the packlet's EEPROM
- monitors transmission quality of the fiber-optic link; if the transmission is degraded or fails, the Fiber Peripheral Controller card automatically transfers to the redundant link, if equipped

Engineering guidelines

General system engineering guidelines for Large Systems are described in *Communication Server 1000M and Meridian 1 Large System Planning and Engineering (NN43021-220)* ().

Copyright © 2007-2010 Nortel Networks. All Rights Reserved.

The following information deals specifically with engineering guidelines for the Fiber Remote IPE planning and implementation. It also describes the fiber-optic interface specifications and fiber-optic link characteristics.

Fiber Remote IPE capacity

The local systems's physical capacity depends on the system's configuration and size. Large Systems are designed to provide port capacities from tens to thousands of ports. These ports are normally local; however, by implementing Fiber Remote IPE, some ports can be located at one or more remote sites.

The overall system capacity does not change by installing Fiber Remote IPE. The difference between a system with Fiber Remote IPE and one without is the distribution of the line cards; that is, the subscriber loops. Fiber Remote IPE allows distribution of the intelligent peripheral equipment at long distances from the local system and provides the same functions and features to remote subscribers as to local subscribers.

> ***Note:*** System capacity can be affected by the capacity of the Fiber Superloop Network card, which supports only one IPE module instead of the two IPE modules supported by the Superloop Network card.

The Fiber Remote IPE capacity can be tailored according to port capacity requirements at the remote site. When planning a Fiber Remote IPE site, determine the number of IPE cards required to support the existing and future traffic needs. Based on these requirements, two Fiber Remote IPE hardware options are available:

- floor-standing Remote IPE column
- wall-mounted Remote IPE cabinet

Floor-standing Fiber Remote IPE

The floor-standing Fiber Remote IPE consists of a pedestal, IPE module, and a top cap. One IPE module supports up to 16 line cards, or 256 ports if each line card has 16 ports. If more ports are required, additional IPE modules can be added to the column. A column contains a maximum of

Copyright © 2007-2010 Nortel Networks. All Rights Reserved.

four modules. Each IPE module requires one Fiber Peripheral Controller card located in the IPE module and a corresponding Fiber Superloop Network card located in a local network card slot.

> ***Note:*** In a standard column, a Superloop Network card supports up to two IPE modules. However, in a system with the Fiber Remote IPE configuration, a Fiber Superloop Network card supports only one Remote IPE module. This is due to the dedicated fiber-optic link configuration between the Fiber Superloop Network card and the Fiber Peripheral Controller card. Since fiber-optic links are dedicated, they cannot be shared between two different IPE modules at the remote site.

Wall-mounted Fiber Remote IPE

The wall-mounted Fiber Remote IPE consists of NT1P70 main and NTAK12 expansion cabinets. The main cabinet supports the Fiber Peripheral Controller card and up to 10 IPE cards or 160 ports. If more ports are required, an expansion cabinet can be installed adjacent to the main cabinet.

These two cabinets are linked with an inter-cabinet cable that plugs into P1 50-pin connectors located at the bottom left-hand corner of each cabinet. This cable extends six peripheral bus DS-30X loops to the first six IPE card slots in the expansion cabinet. One Fiber Peripheral Controller card located in the main cabinet supports cards in both main and expansion cabinets as long as the expansion cabinet contains no more than 6 IPE cards installed in the first six IPE card slots.

Engineering the fiber-optic link

A fiber-optic link can be constructed using single-mode or multi-mode fiber-optic cables. The type of fibers selected depends on various factors:

- distance between the local system and the Fiber Remote IPE site
- possible existence of a fiber-optic link you wish to use for this application
- cost and availability

When engineering a fiber-optic link, consult the component manufacturer's data sheets to determine whether the cable, connectors, and other components meet the transmission characteristics and the signal loss plan for the transmission distance required for the specific Fiber Remote IPE application.

Fiber-optic bandwidth

When using a single-mode fiber, the optical link transmission distance is strictly loss-limited and not dispersion-limited. When using multi-mode fiber, the transmission distance is loss- and dispersion-limited. Appropriate

Copyright © 2007-2010 Nortel Networks. All Rights Reserved.

calculations must be made to determine the maximum link distance. The data rate over the multi-mode fiber is limited by the optical bandwidth of this multi-mode fiber. The bandwidth is defined as the frequency at which a sinusoidal signal is attenuated by 3 dB relative to a DC signal.

For the Fiber Remote IPE, the bandwidth is defined to be 1310 nanometers. The bandwidth-length product for single-mode is 5 GHz km and for the graded index multi-mode is 800 MHz km.

When engineering a fiber-optic link, make sure that the total signal attenuation between the Fiber Superloop Network and the Fiber Peripheral Controller Electro-optical interfaces does not exceed 13 dB loss.

> ***Note:*** If the fiber-optic link already exists, check the link's characteristics and end-to-end loss to determine if it can support a Fiber Remote IPE and, if it can, at what distance between the local system and the Fiber Remote IPE.

Bandwidth engineering rules

The eye closure due to dispersion must not exceed 0.5 dB to ensure reliable operation of the Electro-optical packlets. Based on this, the normalized bandwidth (B_N) must not be less than 0.71.

The maximum fiber length for a link can be calculated by the following equation, where **L** is the fiber-optic link length, $\mathbf{B}_L$ is the bandwidth-length product, $\mathbf{B}_T$ is the NRZ bit rate of 155.52 MHz, and $\mathbf{B}_N$ is the maximum allowable optical bandwidth of 0.71 when normalized to the above bit rate.

$$L = \frac{B_L}{B_T x B_N}$$

To engineer a multi-mode fiber link, follow the steps in Procedure 1 "Engineering a multi-mode fiber link" (page 35).:

Procedure 1
Engineering a multi-mode fiber link

Step	Action
1	Obtain bandwidth-length product of the fiber from the manufacturers' data sheet.
2	Calculate the maximum link length using the above equation.
3	Measure the eye closure of the fiber. When measured at 155.52 MHz and 1310 nanometers, it should be less than 0.5 dB.
4	Measure the attenuation of the fiber link.

Copyright © 2007-2010 Nortel Networks. All Rights Reserved.

When measured at 1310 nanometers, the attenuation should not exceed 10 dB.

--End--

Example: A maximum link length of a multi-mode fiber link with bandwidth-length product of 500NHz km would be:

$$L = \frac{500\text{MHzkm}}{155.52\text{MHzx}0.71} = 4.53\text{km}$$

This multi-mode fiber link should not exceed 4.53 kilometers in length. A 3 dB safety margin should be allowed when engineering a multi-mode link to compensate for additional attenuation as a result of core size variations in fibers. The single-mode fiber core size varies between 8 and 9 microns and the multi-mode fiber core size varies between 50 and 62.5 microns.

Fiber-optic interface specification

When planning a fiber-optic link, consider the transmit and receive signal power and the signal attenuation of each component in the link to determine total signal attenuation.

Table 2 "Fiber-optic transmit and receivesignal levels" (page 36) shows the transmit and receive signal power level at the signal source and the signal destination. In the table, for simplicity, use **FXNET** for Fiber Superloop Network and **FXPEC** for Fiber Peripheral Controller cards. The receive circuit on the Electro-optical packlet must be able to detect a signal at a level as low as –28 dBm.

Table 2
Fiber-optic transmit and receivesignal levels

Signal source	Transmitted power		Received power	
	Min	Max	Min	Max
FXNET Card	–15 dBm	–8 dBm	–28 dBm	–8 dBm
FXPEC Card	–15 dBm	–8 dBm	–28 dBm	–8 dBm

Fiber-optic link loss characteristics

The fiber-optic link components add to the total end-to-end link signal attenuation. The fiber-optic cable attenuation depends on the type of cable selected. The manufacturer's data sheet provides necessary parameter values, which must be considered when engineering the link. In addition, the signal attenuation is also affected by the number of splices in the link and the signal loss in the link terminating the fiber-optic connectors.

Copyright © 2007-2010 Nortel Networks. All Rights Reserved.

Table 3 "Example of fiber-optic link components and their attenuation factors" (page 37) shows an example of different fiber-optic link components and the total signal attenuation for a 10 km link of 11.2 dB.

Table 3
Example of fiber-optic link components and their attenuation factors

Component	Quantity	Attenuation in (dB)	Total attenuation in (dB)
Fiber (10 km)	1	0.6/km	6.0
Splices	10	0.2/splice	2.0
FC/PC Connectors	4	0.8/connector	3.2

Maximum-calculated signal attenuation across the link is 12 dB, which allows 1dB safety margin.

> ***Note:*** Actual attenuation must be determined from specific manufacturer's data sheets for each link component.

Fiber-optic cable handling considerations

Fiber-optic cable selection, installation, and routing require special considerations. Splices and connector contacts represent discontinuities that contribute to the attenuation of the signal as it propagates through the link.

Routing the fiber-optic cable must be considered with care. The most critical routing areas are tight spots where the cable must be bent. When bending a cable, make sure that the minimum bending radius of 1.4 inches (3.5 cm) is not exceeded. If the cable is bent tighter than the minimum radius, the attenuation increases and the cable may break or become damaged.

Before routing and splicing fiber-optic cables, read the cable specification sheet and adhere to the specified installation rules. When handling optical fibers, follow the safety recommendations at all times. Keep all connectors capped while the cables are disconnected.

WARNING

When handling optical fibers, follow the recommended safety procedures at all times.

Before handling optical fibers, take necessary training and become certified in working with fiber-optic cables.

Copyright © 2007-2010 Nortel Networks. All Rights Reserved.

Cable types and their terminations

Single-mode fibers and fiber-optic connectors allow only one path for light to propagate because of the small diameter of the fiber. These are used for high-speed transmission and longer transmission distances. Multi-mode fibers and fiber-optic connectors allow more than one mode of propagation for a specific wavelength. These cause dispersion of light and limit the effective bandwidth and distance of communication. For the Fiber Remote IPE, Nortel recommends single-mode fiber-optic cables.

If a multi-mode fiber-optic link already exists, it must be evaluated to determine if it will support the Fiber Remote IPE application and, if it will, at what distance from the local system. The distance of the link can be determined by finding a point of the fiber-optic link where the signal loss is less than 13 dB for a given transmission rate.

To evaluate an existing link, contact the Nortel distributor to learn the method and instrumentation required to test the link's suitability for the Fiber Remote IPE application.

A fiber-optic link can be composed of single-mode or multi-mode fibers, splices, and fiber-optic connectors. In a floor-standing Fiber Remote IPE, the fiber-optic link terminates at the optical I/O panel FC/PC fiber-optic connectors. In a wall-mounted Fiber Remote IPE cabinet, the fiber-optic link terminates at the fiber management frame and continues from the fiber management frame to the Electro-optical packlet FC/PC fiber-optic connectors installed on the Fiber Peripheral Controller card. In both cases, FC/PC fiber-optic connectors have to be installed onto fibers of the link so that the link can be directly connected to the FC/PC fiber-optic connectors of the Fiber Remote IPE.

System planning and ordering

CS 1000M Large Systems and Meridian 1 Large Systems provide the user with a variety of system sizes and features. To select a system that will best suit current and future communication needs, plan carefully. Contact the Nortel representative or the Nortel distributor to help plan the system.

If installing a new system with Fiber Remote IPE, refer to *Communication Server 1000M and Meridian 1 Large System Planning and Engineering (NN43021-220)* () for overall system information. To obtain specific planning and ordering information for the fiber-optic link and network and peripheral cards interfacing with this link, follow the information in this section.

If there is an existing fiber-optic link, evaluate it to determine if the link characteristics such as loss, fiber-optic mode, and so on, can support a Fiber Remote IPE. Evaluate the distance between the local system and the Fiber Remote IPE; the link loss should not exceed 13 dBs.

Copyright © 2007-2010 Nortel Networks. All Rights Reserved.

System selection

Determine the type of Fiber Remote IPE enclosure. This selection can be dictated by the installation preference, blocking considerations, and the number of IPE cards required at the remote site.

If planning a floor-standing system, select the modular column. If planning a wall-mounted system, select the cabinet.

In some applications where non-blocking or low blocking traffic considerations are important, it is necessary to limit the number of peripheral cards supported by each Fiber Peripheral Controller card. For a non-blocking condition, the 120 voice/data timeslots support seven or eight 16-port line cards. Each additional line card in the IPE module or the wall-mounted cabinet increases call blocking under high traffic conditions. Refer to *Communication Server 1000M and Meridian 1 Large System Planning and Engineering (NN43021-220)* () to calculate traffic.

The system type can also be dictated by the number of ports required at the remote site. The modular column configuration supports 16 line cards and provides a maximum of 256 ports. This column can be expanded by adding a second IPE module to support an additional 256 ports. Each IPE module requires a Fiber Peripheral Controller card at the remote site and a corresponding Fiber Superloop Network card at the local site.

In addition to line cards, the Fiber Remote IPE supports all the cards that do not require external connection to the local common or network equipment.

The wall-mounted configuration supports 10 line cards. The wall-mounted system can be used if the system size requirement is less then ten IPE cards. To expand this type of system beyond ten IPE cards, add an expansion cabinet adjacent to the main cabinet, and install up to six IPE cards into the first six IPE card slots of the expansion cabinet.

Fiber Remote IPE site planning

When selecting a site for the Fiber Remote IPE, consider the number of ports currently required at the site and the possibility of expansion to meet future needs. As well, consider environmental, power, and cable-routing requirements.

Environmental requirements

Fiber Remote IPE equipment conforms to the same environmental requirements as the rest of the system equipment. Temperature, humidity, and altitude for equipment operation should not exceed the specifications shown in Table 4 "Environmental requirements" (page 40).

Copyright © 2007-2010 Nortel Networks. All Rights Reserved.

Table 4 "Environmental requirements" (page 40) shows the operating and storage environmental specifications. Ideally equipment should operate in a stable environment at 22° C (72° F); however, the system is designed to operate in the temperature and humidity ranges specified in the table.

Table 4
Environmental requirements

Condition	Environmental specifications
Operating	
Temperature	0° to 60° C (32° to 140° F)
Relative humidity	5% to 95% noncondensing
Altitude	3,048 meters (10,000 feet) max
Storage	
Temperature	–50° to 70° C (–58° to 158° F)
Relative humidity	5% to 95% noncondensing

Power requirements

At the remote site, cards in the IPE module are powered by the power supply installed on the left-hand side of the IPE module. The power consumption of the Fiber Peripheral Controller card is not significantly different from the power consumption of the standard Peripheral Controller card. This allows the standard IPE module's power supply to be used in Fiber Remote IPE.

Similarly, the wall-mounted cabinet power supply, which is installed in the left-hand side of the cabinet shelf, provides power to the Fiber Peripheral Controller card and up to 10 IPE cards. The expansion cabinet requires its own power supply to provide power to an additional six IPE cards.

Table 5 "FXNET and FXPEC with single and dual Electro-optical packlets power requirements" (page 40) shows the power supply DC output voltages and the current they supply to the Fiber Superloop Network and Fiber Peripheral Controller cards in a redundant and nonredundant fiber-optic link configuration. It also shows the corresponding total power consumption for each card.

Table 5
FXNET and FXPEC with single and dual Electro-optical packlets power requirements

Voltage source in VDC	Nonredundant link		Redundant link	
	FXNET card	FXPEC card	FXNET card	FXPEC card
+5 V	2100 mA	1700 mA	2300 mA	1900 mA

Copyright © 2007-2010 Nortel Networks. All Rights Reserved.

Table 5
FXNET and FXPEC with single and dual Electro-optical packlets power requirements (cont'd.)

Voltage source in VDC	Nonredundant link		Redundant link	
	FXNET card	FXPEC card	FXNET card	FXPEC card
–4.5 V	650 mA	650 mA	1300 mA	1300 mA
+15 V		50 mA		50 mA
–15 V		50 mA		50 mA
+12 V	50 mA		50 mA	
–12 V	50 mA		50 mA	
Total Power	14.6 W	13 W	20 W	18.5 W

Fiber-optic cable requirements

A fiber-optic link may be composed of single-mode or multi-mode fibers, splices, and fiber-optic connectors. In a floor-standing Fiber Remote IPE, the fiber-optic link terminates the optical I/O panel FC/PC fiber-optic connectors.

In a wall-mounted Fiber Remote IPE cabinet, the fiber-optic link terminates at the fiber management frame. The fiber-optic link continues from the fiber management frame to the Electro-optical packlet, FC/PC fiber-optic connectors installed on the Fiber Peripheral Controller card. In both cases, FC/PC fiber-optic connectors have to be installed onto fibers of the link so that the link can be directly connected to the FC/PC fiber-optic connectors of the Fiber Remote IPE.

> ***Note:*** Single-mode fibers and fiber-optic connectors allow only one path for light to propagate because of the small diameter of the fiber. These are used for high speed transmission and longer distances. Multi-mode fibers and fiber-optic connectors allow more than one mode of propagation for a specific wavelength. These cause dispersion of light and limit the effective bandwidth and distance of communication. For the Fiber Remote IPE, Nortel recommends single-mode fiber-optic cables.

To connect the Electro-optical packlet from the Fiber Superloop Network and Fiber Peripheral Controller card faceplate to the optical I/O panel, two optical patchcords are used. For a redundant configuration, four optical patchcords are used, two for transmit sides and two for receive sides.

Electro-optical equipment planning form - example

Table 6 "Example of the planning form for a wall-mounted Fiber Remote IPE" (page 42) shows a sample planning form. It lists components required to construct a fiber-optic link.

Copyright © 2007-2010 Nortel Networks. All Rights Reserved.

Table 6
Example of the planning form for a wall-mounted Fiber Remote IPE

Item	Part Number	Quantity at local system	Quantity at Remote IPE
FXNET card		1	
FXPEC card			1
EOI packlet		1 or optionally 2	1 or optionally 2
EOI packlet blank		1 for a non-redundant link	1 for a non-redundant link
I/O panel		1	1
I/O to faceplate cords		2	2
FP/CP connectors		2	2
Fiber-optic cable (if 1 km lengths)			10 (10 km link)
Splicing			

Electro-optical equipment planning form

Enter the part number and the quantity for each item required at the local system, for the fiber-optic link, and at the Fiber Remote IPE.

Table 7
Ordering form

Item	Part Number	Quantity at local system	Quantity at Remote IPE

Copyright © 2007-2010 Nortel Networks. All Rights Reserved.

Table 7
Ordering form (cont'd.)

Item	Part Number	Quantity at local system	Quantity at Remote IPE

Software requirements

To configure a system with Fiber Remote superloops in LD 96, equip the local system with the REMOTE_IPE package 286.

Copyright © 2007-2010 Nortel Networks. All Rights Reserved.

Copyright © 2007-2010 Nortel Networks. All Rights Reserved.

Equipment installation and configuration

Navigation

This section contains information on the following topics:

"Introduction" (page 45)

"System overview" (page 45)

"Pre-installation preparation" (page 47)

"Fiber-optic equipment installation" (page 52)

"Floor-standing column Fiber Remote IPE installation" (page 60)

"Wall-mounted Fiber Remote IPE installation" (page 68)

"Configuring the Fiber Remote IPE" (page 79)

Introduction

This section describes the installation of the Fiber Remote IPE as an integral part of a CS 1000M Large Systemor Meridian 1 Large System. It explains how to prepare the site and check the equipment before installing it.

System overview

Fiber Remote IPE service can be added to an existing system originally installed and operating without Fiber Remote IPE, or it can be an integral part of a newly installed system.

To install a new system or expand an existing one, refer to *Communication Server 1000M and Meridian 1 Large System Installation and Commissioning (NN43021-310)* () or *CS 1000M and Meridian 1 Large System Upgrades Overview (NN43021-458)* ().

Copyright © 2007-2010 Nortel Networks. All Rights Reserved.

Adding one or more Fiber Remote IPE sites to a local system is treated as a straightforward system expansion; that is, the system should be fully operational before the Fiber Remote IPE equipment is installed and connected. This simplifies installation and fault isolation during installation. To complete the installation of a Fiber Remote IPE site, perform the pre-installation procedures to prepare the site, install the fiber-optic link, and install and connect the equipment.

Pre-installation procedures include:

- preparing the site
- unpacking and inspecting the equipment
- routing and splicing fiber-optic cables to create a fiber-optic link between two sites
- connecting the fiber-optic link FC/PC optical connector to the Fiber Remote IPE
- taking an inventory of Fiber Remote IPE equipment
- selecting the local network slot for the NT1P61 Fiber Superloop Network card

Installation procedures include:

- installing the NT1P61 Fiber Superloop Network card in the selected network card slot
- installing the NT1P63 Electro-optical packlets into the NT1P61 Fiber Superloop Network card
- installing the fiber-optic patchcords between the Fiber Superloop Network faceplate FC/PC optical connectors and the optical I/O panel at the rear of the local module housing the NT1P61 Fiber Superloop Network card
- connecting the fiber-optic link FC/PC optical connector to the optical I/O panel at the rear of the local module housing the NT1P61 Fiber Superloop Network card
- connecting the master system monitor and TTY terminal cables at the local site
- connecting the fiber-optic link to the I/O panel
- installing the Fiber Remote IPE column or cabinet
- installing the NT1P62 Fiber Peripheral Controller card in Remote IPE module or cabinet controller card slot
- installing the NT1P63 Electro-optical packlet(s) on the NT1P62 Fiber Peripheral Controller card

Copyright © 2007-2010 Nortel Networks. All Rights Reserved.

- installing the fiber-optic patchcords between the Fiber Peripheral Controller faceplate FC/PC optical connectors and the optical I/O panel at the rear of the module
- connecting the slave system monitor and TTY terminal cables at the remote site
- connecting the fiber-optic link to the Fiber Remote IPE

Fiber Remote IPE is offered in two versions to provide flexibility in line size and equipment location. These are:

- floor-standing column
- wall-mounted cabinet

Note: The floor-standing column consists of one IPE module and houses up to 16 IPE cards. The wall-mounted cabinet may consist of only the main cabinet when 10 or fewer IPE cards are required, or the main and expansion cabinets when up to 16 IPE cards are required.

Pre-installation preparation

Pre-installation preparation consists of preparing the site, unpacking and inspecting components, taking inventory, selecting the network slot for the NT1P61 Fiber Superloop Network card, installing the card, installing the fiber-optic link, and preparing the remote site cables, grounding, power source, and the location of the Remote IPE column or cabinets.

Preparing the site

When preparing a site, consider environmental, structural, and electrical factors. These factors must be considered for the entire system; that is, local and Fiber Remote IPE sites. This information is available in *Communication Server 1000M and Meridian 1 Large System Planning and Engineering (NN43021-220)* ().

To prepare the site for Fiber Remote IPE installation:

1. Install and verify the operation of the local system without linking to the Fiber Remote IPE site(s). Refer to *Communication Server 1000M and Meridian 1 Large System Installation and Commissioning (NN43021-310)* ().
2. Install the Fiber Remote IPE column. Also refer to *Communication Server 1000M and Meridian 1 Large System Installation and Commissioning (NN43021-310)* (), or

Copyright © 2007-2010 Nortel Networks. All Rights Reserved.

Install the cabinet version of Fiber Remote IPE as described in "Installing the wall-mounted cabinet" (page 68).

3. Route and splice the fiber-optic cable between the local site and Fiber Remote IPE site(s) as described in "Connecting the fiber-optic link to the Remote IPE module" (page 67).

Unpacking and inspection

Unpack and inspect the equipment for damage. When unpacking, follow general precautions recommended by computer and telephone equipment manufacturers:

- Remove items that generate static charge from the installation site.
- Use antistatic spray if the site is carpeted.
- Observe grounding precautions before handling any equipment.
- Remove equipment carefully from its packaging.
- Visually inspect the equipment for obvious faults or damage. Any damaged component must be reported to the sales representative and the carrier who delivered the equipment.
- Do not bend and twist the fiber-optic cables excessively. Make sure that the cable is not bent beyond the specified minimum bending radius of 1.4 inches (3.5 cm) when handled or installed.
- Hold the plug-in cards by their nonconducting edges and keep them in their antistatic bags until ready to install them.
- Do not stack the plug-in cards on top of each other.

Taking inventory

After the equipment has been unpacked and visually inspected, verify that all the equipment is at the site before the installation begins. Equipment received must be checked against the shipping documents. Any shortages must be noted and reported to the sales representative.

Installing the fiber-optic link

If the fiber-optic link already exists, check the fiber-optic link characteristics and the end-to-end loss to determine if the link can support a Fiber Remote IPE and, if it can, at what distance between the local system and the Fiber Remote IPE.

Consult the Nortel distributor to learn how to verify that the existing fiber-optic link is suitable for the Fiber Remote IPE application, and what equipment to use to do so.

Copyright © 2007-2010 Nortel Networks. All Rights Reserved.

To install the fiber-optic link to the Fiber Remote IPE, the link fibers must be terminated with FC/PC optical connectors at the local site. At the Fiber Remote IPE, the link fibers are also terminated with FC/PC optical connectors for the floor-standing modular system. For the wall-mounted cabinet system, however, the link fibers are terminated into a fiber-management frame and continue from the fiber management frame to the Electro-optical packlet FC/PC optical connectors on the Fiber Peripheral Controller faceplate.

When routing the cables to the local column, the floor-standing Fiber Remote IPE column, or wall-mounted Fiber Remote IPE cabinet, take the following precautions:

- Do not bend the fiber-optic cable or individual fibers beyond the minimum bending radius of 1.4 inches (3.5 centimeters).
- Protect the exposed parts of the cable and fibers with plastic conduit.
- Terminate each selected fiber with an FC/PC optical connector (a fiber-optic cable may contain more fibers than required by the single or redundant link design). At the fiber management frame, the type of optical connectors used depends on the available frame optical connectors.

Mark each fiber with Tx (transmitting) or Rx (receiving) designator behind the FC/PC optical connector to identify its function in the link.

WARNING

When handling optical fibers, follow the recommended safety procedures at all times.

Before handling optical fibers, take necessary training and become certified in working with fiber-optic cables.

If possible, shut off power to all external transmission equipment so light beams will not be present at the exposed ends of the fiber cables. Keep all connectors capped while the cables are disconnected.

Handle fibers with extreme care. Observe a minimum bending radius of 1.4 inches (3.5 cm) at all times. Optical connections to the optical units should be finger-tightened only.

The link fiber marked Tx_0 at the remote site must be marked Rx_0 at the local site, and the link fiber marked Rx_0 at the remote site must be marked Tx_0 at the local site. For a redundant link, in addition to Tx_0 and Rx_0, Tx_1 at the remote site must be marked Rx_1 at the local site, and Rx_1 at the remote site must be marked Tx_1 at the local site as shown in Figure 8 "Fiber-optic link" (page 50).

Copyright © 2007-2010 Nortel Networks. All Rights Reserved.

Figure 8
Fiber-optic link

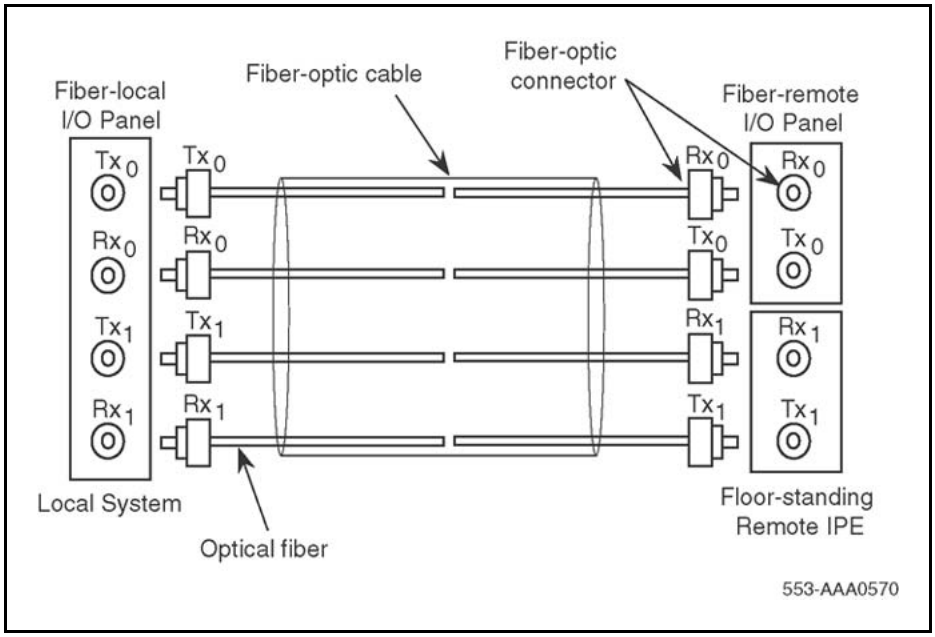

Selecting the Fiber Superloop Network card slot

The position of the NT1P61 Fiber Superloop Network card in the local system depends on the system type installed at the local site. The system type determines what type of module will house the card.

Table 8 "Modules supporting a Fiber Superloop Network card" (page 50) lists modules that provide network card slots, the system options where these modules are used, and card slots where network cards can be housed.

Table 8
Modules supporting a Fiber Superloop Network card

Modules	System	Network card slot
NT4N41 Core/Network module	Meridian 1 PBX 61C, Meridian 1 PBX 81C, CS 1000M SG, CS 1000M MG	Card slots 0–7
NT5D21 Core/Network module	Meridian 1 PBX 51C, Meridian 1 Option 61C, Meridian 1 Option 81C, CS 1000M SG, CS 1000M MG	Card slots 0–7
NT8D35 Network module	Meridian 1 Option 81, Meridian 1 Option 81C, Meridian 1 PBX 81C, CS 1000M MG,	Card slots 5–12

Copyright © 2007-2010 Nortel Networks. All Rights Reserved.

Table 8
Modules supporting a Fiber Superloop Network card (cont'd.)

Modules	System	Network card slot
NT9D11 Core/Network module	Meridian 1 Option 61C, CS 1000M SG	Card slots 0–7
NT6D39 CPU/Network module	Meridian 1 Option 51, Meridian 1 Option 61C	Card slots 1–8

Network card slots in modules listed in Table 8 "Modules supporting a Fiber Superloop Network card" (page 50) house other network-type cards that contend with the NT1P61 Fiber Superloop Network card for space in the module. If one or more network card slots are empty, where to install the NT1P61 Fiber Superloop Network card is determined as follows:

1. Check all network cards in the module and see if there are any NT8D04 Superloop Network cards.
2. If no NT8D04 Superloop Network cards are installed, any empty network card slot can be used to install an NT1P61 Fiber Superloop Network card.
3. If the module contains one or more NT8D04 Superloop Network cards, install the NT1P61 Fiber Superloop Network card at least one network card slot away from the NT8D04 Superloop Network card. Otherwise, refer to *Communication Server 1000M and Meridian 1 Large System Planning and Engineering (NN43021-220)* () for a detailed explanation of where to install the NT1P61 Fiber Superloop Network card when only slots adjacent to NT8D04 Superloop Network cards are available.

   Note: Each network card slot supports two network loops. Although an NT8D04 Superloop Network card physically occupies only one card slot, it nevertheless occupies four network loops. This means that two network loops of an adjacent network card slot are also occupied by the NT8D04 Superloop Network card. Therefore, only a network card not requiring network loop access can be installed in the empty card slot whose network loops are being used by the NT8D04 Superloop Network card.

Copyright © 2007-2010 Nortel Networks. All Rights Reserved.

Fiber-optic equipment installation

To complete the installation of the fiber-optic interface that links the local system to the Fiber Remote IPE equipment:

- install and verify the operation of the local system, if it is not already installed and operating correctly
- identify the network card slot and install the NT1P61 Fiber Superloop Network card in the local system
- install the NT1P75 fiber-optic patchcords
- connect the fiber-optic link to the optical I/O panel

Installing and verifying system operation

The Fiber Remote IPE facilities can be added to an existing system by installing the appropriate electro-optical equipment in the system, installing one or more Fiber Remote IPEs at different remote sites, and linking the local system with remote sites using single or redundant fiber-optic links.

If a new system is configured with Fiber Remote IPE facilities, the system is normally assembled at the factory with cards already-installed and NT1P75 fiber-optic patchcords connected between the NT1P61 Fiber Superloop Network card faceplate and the optical I/O panel at the rear of the module housing this card. It is only necessary to connect the fiber-optic link to the local system and the Fiber Remote IPE optical I/O panels to complete the link. However, if the card is not installed, follow the steps in "Selecting the Fiber Superloop Network card slot" (page 50).

Installing the Fiber Superloop Network card

The purpose of the following steps is to describe how and where to install the Superloop Network card(s). In a new system, the cards would have been installed in a network card slot at the factory; however, it may be necessary to install additional NT1P61 Fiber Superloop Network cards to expand the number of remote sites or replace a defective card.

NT1P63 Electro-optical packlets, which are installed on the NT1P61 Fiber Superloop Network card, are normally installed in the factory, however, it might be necessary to install an additional NT1P63 Electro-optical packlet on the NT1P61 Fiber Superloop Network card to make a single fiber-optic link into a redundant link. The packlet and the card can be installed when the system is powered up and running.

To install the Superloop Network cards, follow the steps in Procedure 2 "Installing Superloop Network cards" (page 53).

Copyright © 2007-2010 Nortel Networks. All Rights Reserved.

Procedure 2
Installing Superloop Network cards

Step	Action
1	Set the ENB/DIS switch on the Fiber Superloop Network card to DIS.
2	Pull the NT1P61 Fiber Superloop Network card's upper locking device away from the faceplate and press the lower locking device downwards.
3	While holding the card by these locking devices, insert it into the card guides of the selected network card slot.
4	Slide the card into the module until it engages the backplane connector.
5	Carefully push the upper locking device lever towards the faceplate and the lower locking device upwards to insert the card connector into the backplane connector and lock the card in place.
6	If not already installed, install the NT1P63 Electro-optical packlet(s) onto the NT1P61 Fiber Superloop Network card. Do this by inserting the NT1P63 Electro-optical packlet, connector first, through the NT1P61 Fiber Superloop Network card faceplate opening and plugging it into the connector on the NT1P61 Fiber Superloop Network card. For consistency, install the NT1P63 Electro-optical packlet into the top connector location if only one NT1P63 Electro-optical packlet is required (for nonredundant link operation). Install the blank packlet into the bottom connector location. For a redundant link, install both NT1P63 Electro-optical packlets.
7	Install the optical I/O patch-panel, which is a part of the NT1P76AA cable assembly, in the empty connector slot of the module's I/O panel by screwing its top and the bottom screws into the slot screw holes on the I/O panel. Use one connector slot for the FC/PC optical connectors that link the NT1P61 Fiber Superloop Network card and the NT1P63 Electro-optical packlets to the fiber-optic link, as shown in Figure 9 "Fiber Superloop Network card patchcord connections in Meridian 1 PBX 81C" (page 55).
8	Use another empty connector slot in the I/O panel for the System Monitor/TTY ports I/O patch-panel, also part of the NT1P76AA cable assembly, as shown in Figure 10 "System monitor and TTY cable connections" (page 57). Screw the top and the bottom screws of the cable's connector bracket into the connector slot screw holes on the I/O panel.

Copyright © 2007-2010 Nortel Networks. All Rights Reserved.

9	Set the ENB/DIS switch on the Fiber Superloop Network card to ENB and observe the LED on the card as it performs self-tests. The LED should blink three times and then stay ON until enabled by software. When enabled by software, the LED turns OFF permanently, if it is operational.

--End--

Installing fiber-optic patchcords

NT1P75 fiber-optic patchcords connect NT1P63 Electro-optical packlets to fiber-optic connectors on the I/O panel at the rear of the network module housing the NT1P61 Fiber Superloop Network card. Figure 9 "Fiber Superloop Network card patchcord connections in Meridian 1 PBX 81C" (page 55) illustrates NT1P63 Electro-optical packlet FC/PC fiber-optic connectors on the NT1P61 Fiber Superloop Network card and the I/O panel at the rear of the module. To install patchcords, follow the steps in Procedure 3 “Installing fiber-optic patchcords” (page 54).

Procedure 3
Installing fiber-optic patchcords

Step	Action
1	Carefully push each patchcord through the cable channel from the front of the module to the back. For a single fiber-optic link, use one patchcord that contains two fibers, one for the receive side and one for the transmit side. For a redundant link, two patchcords are needed. When handling fiber-optic cables, do not bend them more than their minimum allowed bending radius of 1.4 inches (3.5 cm).
2	Install the optical I/O patch-panel in the empty connector slot of the module’s I/O panel. Find an empty connector slot that matches the size of the patch-panel bracket and use two screws and two washers to install it on the I/O panel. The optical I/O patch-panel can contain up to four FC/PC fiber-optic connectors, which are used for a redundant link configuration.
3	Plug the NT1P75 fiber-optic patchcord FC/PC optical connectors into the appropriate NT1P63 Electro-optical packlet FC/PC optical connectors on the NT1P61 Fiber Superloop Network card faceplate. The receive (Rx) is the top connector on each packlet and transmit (Tx) is the bottom connector.

Copyright © 2007-2010 Nortel Networks. All Rights Reserved.

4 Plug the other NT1P75 fiber-optic patchcord FC/PC optical connectors into connectors at the optical I/O patch-panel at the rear of the module.

Use Tx and Rx designators to identify transmit and receive patchcord connectors. Repeat this step for all patchcords.

--End--

Figure 9 "Fiber Superloop Network card patchcord connections in Meridian 1 PBX 81C" (page 55) shows the Core/Net module of a Meridian 1 PBX 81Cwith the NT1P61 Fiber Superloop Network card and patchcords installed.

Figure 9
Fiber Superloop Network card patchcord connections in Meridian 1 PBX 81C

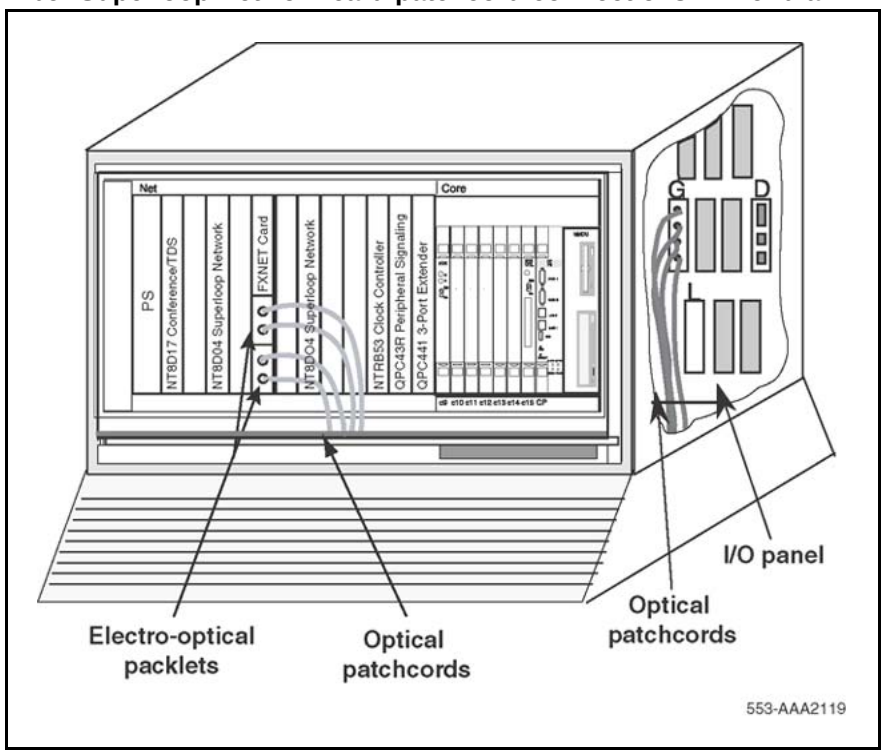

Installing system monitor and TTY cables

The system monitor cable is normally installed in the factory and does not have to be installed at the site. The cable that must be installed at the site is the cable connecting the terminal or TTY to the RJ-45 connector located on the I/O panel located at the rear of the module containing the NT1P61 Fiber Superloop Network card.

Copyright © 2007-2010 Nortel Networks. All Rights Reserved.

Refer to Figure 10 "System monitor and TTY cable connections" (page 57) to see the I/O panel and the top connector. The top connector is used to connect the terminal or TTY to the Fiber Superloop Network card when the Man Machine Interface (MMI) port is in the MMI mode, or to connect the Fiber Superloop Network card to an SDI port when the MMI port is in the SL-1 mode.

> ***Note:*** To connect the Fiber Superloop Network card to an SDI port of the SDI cards such as NTND02BA, QPC841C, or QPC139B, connect the RJ-45 connector on the I/O panel to the RS-232 port on the front panel of the SDI card. The cable must be a null modem type with pin 2 (TD) and pin 3 (RD) swapped, and provide DSR and CTS pins high (+12 V). To connect to an NT8D41AA SDI Paddle Board to the Fiber Superloop Network card, use NT8D84 AA and NT8D93AJ cables between the SDI port and the I/O panel at the rear of the module. For switch setting on individual SDI cards, refer to *Circuit Card Reference (NN43001-311)* ().

In the local column, the pedestal contains a master system monitor that monitors system alarms. Alarms from a Fiber Remote IPE site are reported over the fiber-optic link and the NT1P61 Fiber Superloop Network card to the master system monitor and from there to the CPU. The CPU sends alarm messages to the system terminal or TTY identifying the problem.

Figure 10 "System monitor and TTY cable connections" (page 57) shows NT1P61 Fiber Superloop Network card connections to the I/O panel to provide an MMI, a slave system monitor, and master system monitor port.

Figure 10 "System monitor and TTY cable connections" (page 57) also shows the connection between the system monitor card and the master monitor port on the I/O panel.

Copyright © 2007-2010 Nortel Networks. All Rights Reserved.

Figure 10
System monitor and TTY cable connections

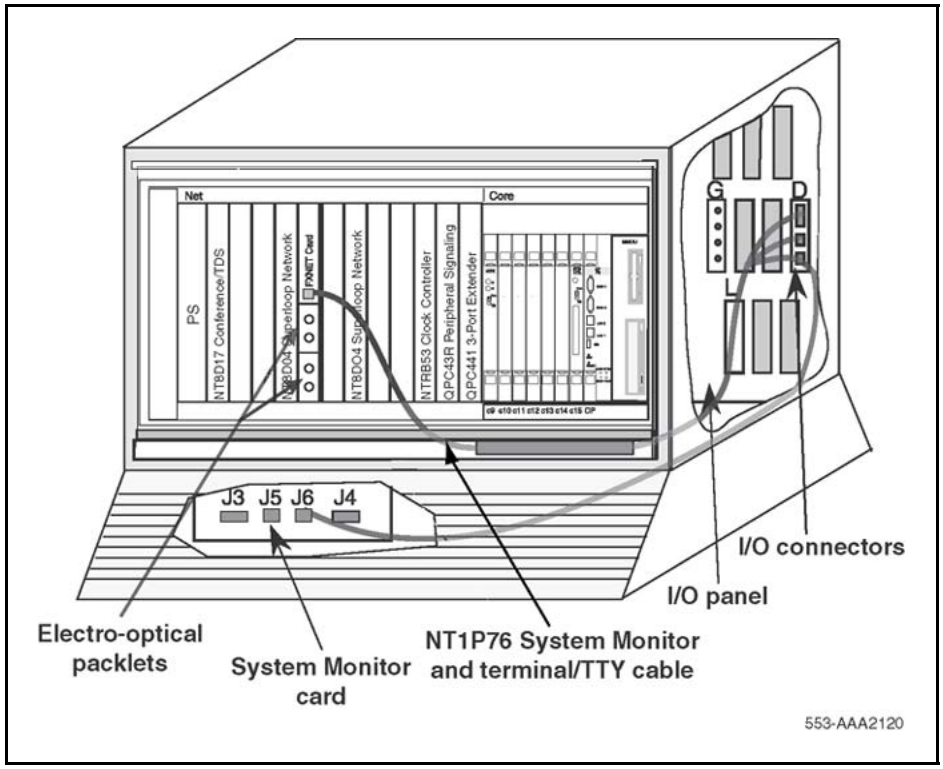

To connect the NT1P61 Fiber Superloop Network card to the system monitor in the pedestal, to the slave system monitor in an adjacent column, and to the terminal or TTY, follow the steps in Procedure 4 “Connecting the NT1P61 card” (page 57).

Procedure 4
Connecting the NT1P61 card

Step	Action
1	Plug the 15-pin D-type connector at the one end of the NT1P76AA cable into the 15-pin D-type connector located on the faceplate of the NT1P61 Fiber Superloop Network card.
2	Route the other end of the cable through the cable channel to the I/O panel at the back of the module with the NT1P61 Fiber Superloop Network card.
3	Install the electrical I/O patch-panel into an empty I/O panel connector slot by screwing the top and bottom screws of the cable connector bracket to the connector slot on the I/O panel. The electrical I/O patch-panel (bracket) is part of the NT1P76AA cable.

Copyright © 2007-2010 Nortel Networks. All Rights Reserved.

4 Plug the RJ-11 connector at one end of the cable into the RJ-11 receptacle on the I/O panel to provide an RS-422 interface to the system monitor.

5 Plug the other end of the cable RJ-11 connector into J6 receptacle on the system monitor in the pedestal.

6 Connect an RJ-11 cable between the second RJ-11 receptacle on the I/O panel and daisy-chain the I/O patch-panel connectors to other Fiber Superloop Network cards as shown in Figure 9 "Fiber Superloop Network card patchcord connections in Meridian 1 PBX 81C" (page 55), if required.

7 Plug the RJ-45 connector at the one end of the A0361365 terminal cable into an empty connector slot on the I/O panel.

8 Plug the other end of the A0361365 terminal cable into the RJ-45/RS-232 adapter, and then plug this adapter into the terminal or TTY RS-232 connector.

An RJ-45 to DB-25 adapter can be used to connect a terminal that has a DB-25-type connector for its RS-232 interface.

9 If a Fiber Superloop Network card is connected to an SDI card, connect a null modem cable (DB-25 male to DB-25 female with DSR and CTS pulled high +12 volts) to the SDI port in the module.

Refer to *Circuit Card Reference (NN43001-311)* () for switch settings for the specific SDI card.

10 Plug the other end of the null modem cable into a DB-9 to DB-25 adapter and plug the DB-9 adapter connector into the DB-9 connector on the I/O patch-panel.

--End--

Figure 11 "System monitor connections at the local site and the Fiber Remote IPE" (page 59) shows local columns and three NT1P61 Fiber Superloop Network cards that support three remote sites. Cable connected to the NT1P61 Fiber Superloop Network card faceplate connector provides an RS232 SDI/MMI port and two RS422 system monitor ports.

Figure 11 "System monitor connections at the local site and the Fiber Remote IPE" (page 59) also shows system monitor connections between multiple Fiber Superloop Network cards and the master system monitor residing in the pedestal. It shows the connection between the master and slave system monitors when multiple adjacent columns exist. At the remote site, the system monitor connects only to the module on top of the pedestal, as shown in the figure.

Copyright © 2007-2010 Nortel Networks. All Rights Reserved.

From Fiber Superloop Network #1, an RJ-11 cable can be extended to the lowest slave system monitor J6 connector in the pedestal. This connection makes the three Fiber Superloop Network cards the lowest slave system monitors in the chain where Fiber Superloop Network card #3 is the lowest.

The Fiber Remote IPE alarms are received over the link and through the Fiber Superloop Network cards to the system monitor J6 connector.

Figure 11
System monitor connections at the local site and the Fiber Remote IPE

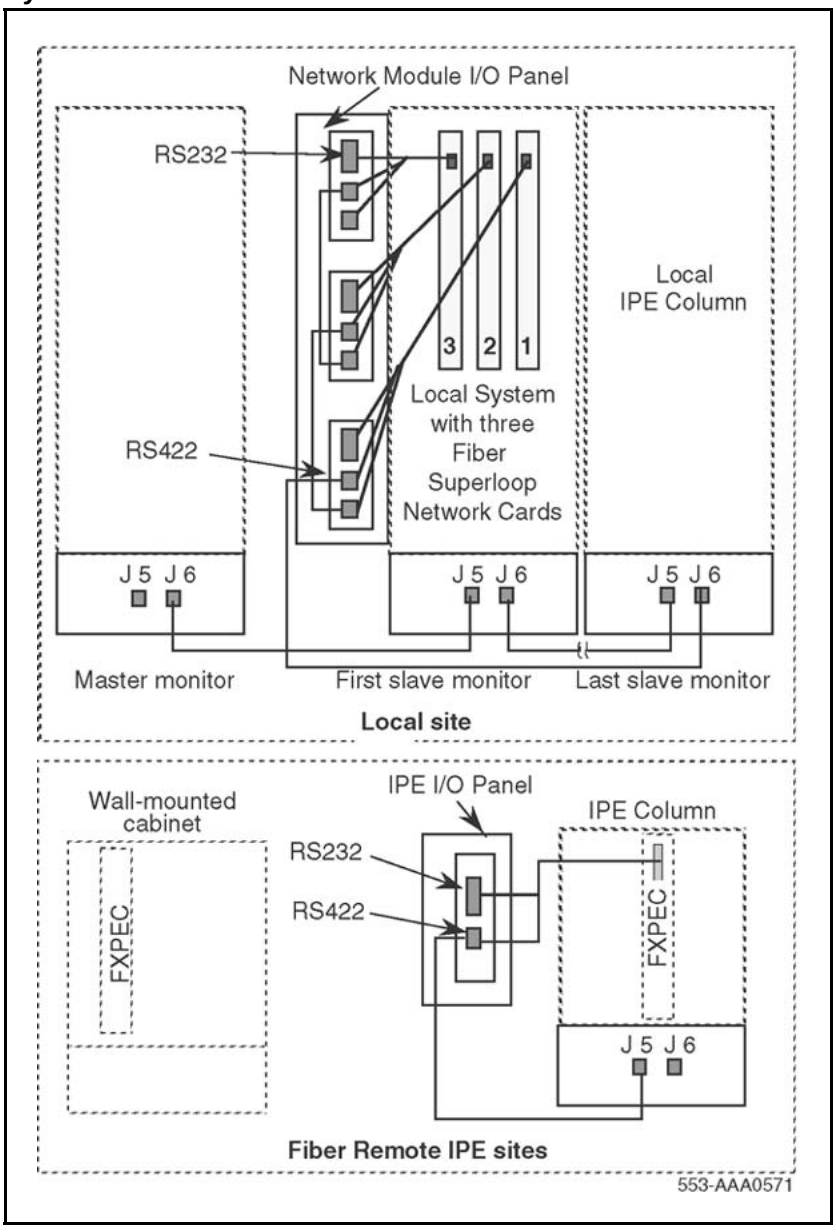

Copyright © 2007-2010 Nortel Networks. All Rights Reserved.

Connecting the fiber-optic link to the local system

Each required fiber of the fiber-optic cable, at each end of the link, must be terminated with an FC/PC optical connector. This connector plugs into the FC/PC optical connector on the I/O panel.

For a single link, install connectors on only two fibers at each end of the link: one for the transmit side and one for the receive side. For a redundant link, four fibers must have connectors installed at each end.

To connect the link to the network optical I/O panel at the local system site, follow the steps in Procedure 5 “Connecting the fiber-optic link to the local system” (page 60).

Procedure 5
Connecting the fiber-optic link to the local system

Step	Action
1	Identify the link FC/PC optical connector marked Tx_0 and Rx_0 for a single link, or marked Tx_0, Rx_0, Tx_1, and Rx_1 for a redundant link.
2	Identify the transmit and receive connectors on the optical I/O panel (bracket) installed in an empty network I/O panel connector slot at the local site.
3	Plug the link FC/PC optical connector marked Tx_0 into the I/O panel FC/PC optical connector marked Tx_0.
4	Plug the link FC/PC optical connector marked Rx_0 into the I/O panel FC/PC optical connector marked Rx_0.
5	Repeat steps 3 and 4 for the Tx_1 and Rx_1 if using a redundant link.

--End--

Floor-standing column Fiber Remote IPE installation

To complete the installation of floor-standing Fiber Remote IPE equipment:

- Install the floor-standing column.
- Install the cards in the IPE module.

Copyright © 2007-2010 Nortel Networks. All Rights Reserved.

- Install the NT1P75 fiber-optic patchcords.
- Connect the fiber-optic link to the optical I/O panel.

  Note: All Fiber Remote IPE modules or cabinets are installed in the factory with cards already in their respective card slots. The only exception is the power supply, which is packaged separately and must be installed at the site.

Installing the floor-standing column

The column is normally assembled in the factory with cards already installed and NT1P75 fiber-optic patchcords connected between the NT1P62 Fiber Peripheral Controller card faceplate and the optical I/O panel at the rear of the IPE module.

If the column is not assembled in the factory, to install the modular column (floor-standing column) at the remote site, follow the instructions in *Communication Server 1000M and Meridian 1 Large System Installation and Commissioning (NN43021-310)* (). It describes how to install the pedestal, the IPE module, and the top cap and how to connect the power, the internal and external communication cables, and subscriber loops.

To install the PFTU to the floor-standing Fiber Remote IPE, follow the instructions in *Communication Server 1000M and Meridian 1 Large System Installation and Commissioning (NN43021-310)* ().

Installing cards in the Remote IPE module

The purpose of the following steps is to describe how and where to install the cards in the Remote IPE module. Even though the cards were shipped installed from the factory, step-by-step instructions are provided for card installation. Follow these instructions when additional IPE cards are installed or defective cards are replaced.

NT1P63 Electro-optical packlets, which are installed on the NT1P62 Fiber Peripheral Controller card, are normally installed in the factory; however, it may be necessary to install an additional NT1P63 Electro-optical packlet onto the NT1P62 Fiber Peripheral Controller card to make a single fiber-optic link into a redundant link.

To install these cards, follow the steps in Procedure 6 “Installing cards in the Remote IPE module” (page 62).

Copyright © 2007-2010 Nortel Networks. All Rights Reserved.

Procedure 6
Installing cards in the Remote IPE module

Step	Action
1	Pull the NT1P62 Fiber Peripheral Controller card's upper locking device away from the faceplate and press the lower locking device downwards. While holding the card by these locking devices, insert it into the card guides into the Controller slot left-hand card guide, which is located immediately to the right of slot 7.
2	Slide the card into the cabinet until it engages the backplane connector.
3	Push the upper locking device lever towards the faceplate and the lower locking device upwards to insert the card connector into the backplane connector and lock the card in place.
4	Observe the LED on the card as it performs self-tests. The LED should blink three times and then stay ON until enabled by software. When enabled by software, the LED turns OFF permanently, if operational.
5	Install the NT1P63 Electro-optical packlet onto the NT1P62 Fiber Peripheral Controller card by inserting the NT1P63 Electro-optical packlet, connector first, through the NT1P62 Fiber Peripheral Controller card faceplate opening and plugging it into the connector on the NT1P62 Fiber Peripheral Controller card. For consistency, install the NT1P63 Electro-optical packlet into the top connector if only one Electro-optical packlet is required (for single link operation). Install a blank packlet in place of the second NT1P63 Electro-optical packlet.
6	Install IPE cards in slots 0 through 7 and 8 through 15 by pulling the card locking devices away from the faceplate and inserting the cards into the card guides of an IPE card slot.
7	Slide the card into the module until it engages the backplane connector, and then push the locking device levers towards the faceplate to insert the card connector into the backplane connector and lock the card in place.
8	Repeat steps 6 and 7 for each IPE card.
9	Remove the back panel to access the I/O panel connector slots.
10	Install the optical I/O patch-panel in the empty connector slots of the IPE module's I/O panel by using two screws and two washers for each connector. Use connector slots J2 and J3 for the FC/PC optical connectors that link the NT1P62 Fiber Peripheral Controller card and

Copyright © 2007-2010 Nortel Networks. All Rights Reserved.

NT1P63 Electro-optical packlets, using patchcords, to the fiber-optic link, as shown in Figure 12 "Patchcord connections on the IPE module" (page 64).

Use the empty J4 and J5 connector slots in the I/O Panel for the System Monitor and TTY I/O patch-panels, as shown in Figure 13 "System monitor and TTY cable connections" (page 66).

--End--

Installing fiber-optic patchcords

NT1P75 fiber-optic patchcords connect NT1P63 Electro-optical packlets to FC/PC fiber-optic connectors on the I/O panel at the rear of the IPE module. Figure 12 "Patchcord connections on the IPE module" (page 64) illustrates NT1P63 Electro-optical packlets FC/PC fiber-optic connectors and FC/PC fiber-optic connectors on the I/O panel at the rear of the module.

To install the patchcords follow the steps in Procedure 7 “Installing fiber-optic patchcords” (page 63).

Procedure 7
Installing fiber-optic patchcords

Step	Action
1	Carefully push each NT1P75 fiber-optic patchcord through the cable channel from the front of the module to the back. For a single fiber-optic link, use one patchcord that contains two fibers, one for the receive side and one for the transmit side. For a redundant link, two patchcords are needed. When handling fiber-optic cables, do not bend them more than their minimum allowed bending radius of 1.4 inches (3.5 cm).
2	Plug NT1P75 fiber-optic patchcord FC/PC optical connectors into the appropriate NT1P63 Electro-optical packlet FC/PC optical connectors on the NT1P62 Fiber Peripheral Controller faceplate.
3	Plug the other NT1P75 fiber-optic patchcord FC/PC optical connectors to the FC/PC fiber-optic connectors on the I/O panel.
4	Repeat steps 2 and 3 for all patchcords.

--End--

Copyright © 2007-2010 Nortel Networks. All Rights Reserved.

Figure 12 "Patchcord connections on the IPE module" (page 64) shows the Fiber Remote IPE module with IPE cards and the NT1P62 Fiber Peripheral Controller card already installed. It also shows the NT1P75 fiber-optic patchcords routing from the NT1P62 Fiber Peripheral Controller card faceplate to the module's FC/PC optical connectors on the I/O panel.

Figure 12
Patchcord connections on the IPE module

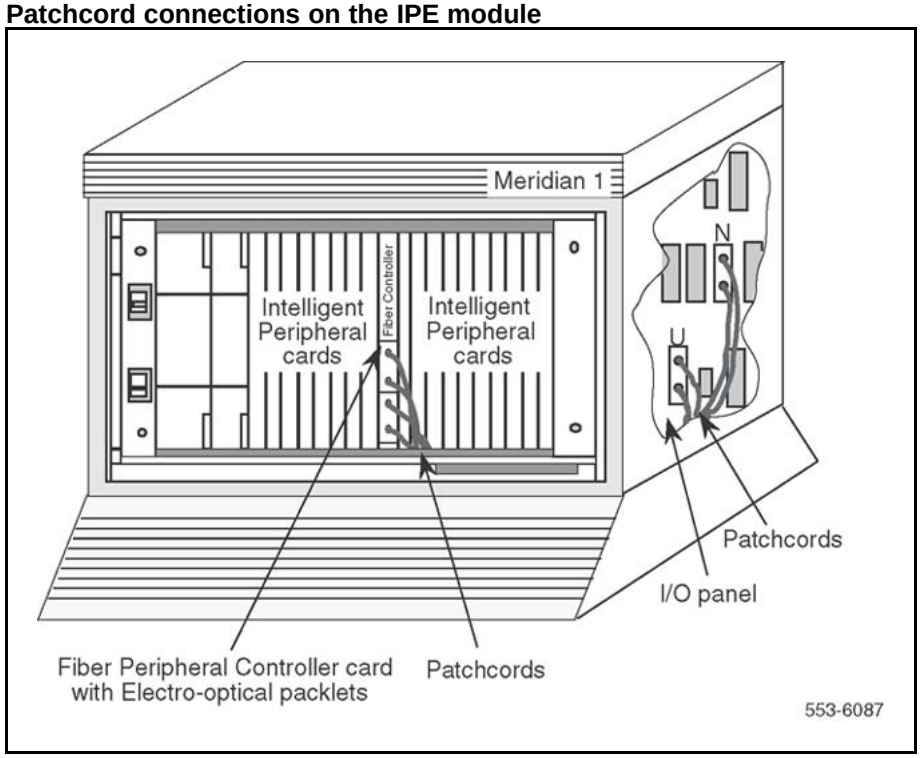

Installing system monitor and TTY cables

For floor-standing column/UEM Fiber Remotes, the FPEC communicates directly with the XSM and determines the XSM address by looping through all possible addresses (1-64) until the XSM responds. When the address is known, the FPEC sends it to the FNET so it can start processing messages from the master. This autoconfiguration is executed every time the FPEC initializes. The dip switch settings at the remote end Slave XSM determines the XSM address for each standard XSM installation. The XSM alarms are sent over the fiber span. The XSM is connected as part of

Copyright © 2007-2010 Nortel Networks. All Rights Reserved.

the main daisy chain by the FNET breakout cables. The XSM number can be allocated as a regular XSM address and included in the address range of the master XSM. It cannot be used by any other XSM.

> ***Note:*** LD 97 programming of the XSM is available if PKG 296 <REMOTE_IPE> is equipped. Package 296 denotes phase 2 Fiber Remote and allows for XSM emulation for wall-mounted cabinets. LD 97 programming for floor-standing/UEM columns is not required and is ignored. The XSM address is determined by hardware polling. See"Wall-mounted Fiber Remote IPE installation" (page 68) for XSM installation instructions.

The system monitor cable is normally installed in the factory and does not have to be installed at the site. The cable that has to be installed at the site is the cable connecting the terminal or TTY to the 9-pin D-type connector on the IPE module I/O panel (the MMI port).

In the remote floor-standing column, the pedestal contains a slave system monitor used to monitor Fiber Remote IPE system alarms. These alarms are reported over the fiber-optic link and through the NT1P61 Fiber Superloop Network card to the master system monitor and from there to the CPU. The CPU sends alarm messages to the system terminal or TTY identifying the problem.

These alarms are also displayed or printed on the remote site terminal or TTY. Figure 13 "System monitor and TTY cable connections" (page 66) shows the system monitor and TTY cable connections for a floor-standing column.

Copyright © 2007-2010 Nortel Networks. All Rights Reserved.

Figure 13
System monitor and TTY cable connections

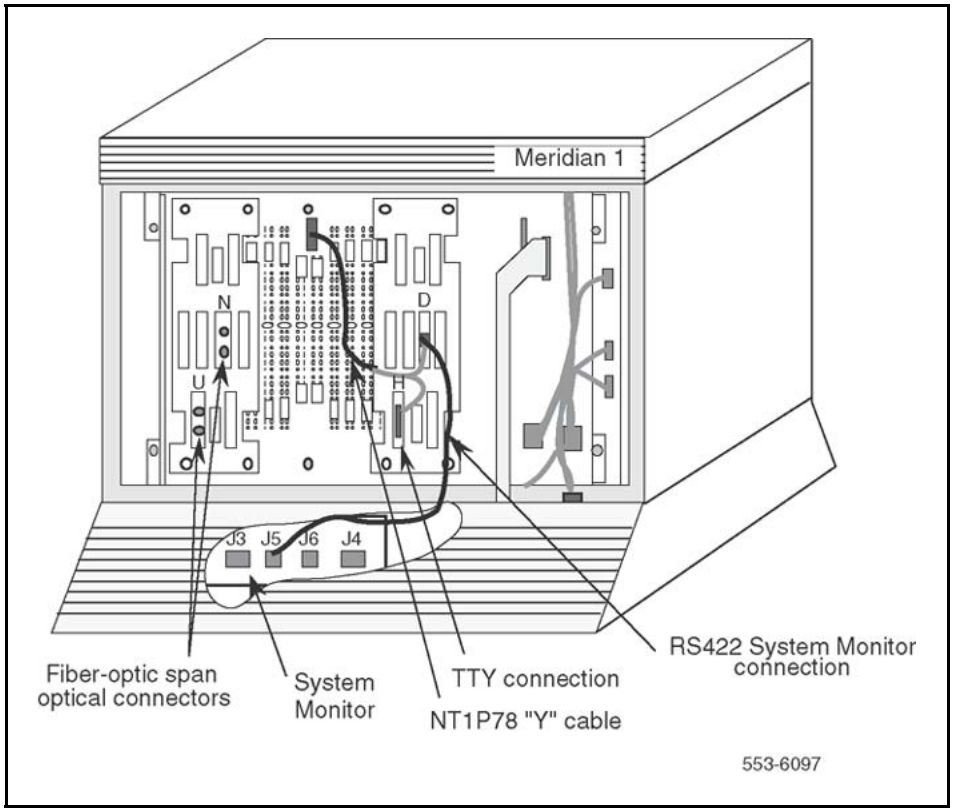

To connect the NT1P62 Fiber Peripheral Controller card to the terminal or TTY and the slave system monitor in the pedestal; follow the steps in Procedure 8 “Installing NT1P78AA Y cable between the backplane and the I/O panel” (page 66) to install the NT1P78AA Y cable between the backplane and the I/O panel:

Procedure 8
Installing NT1P78AA Y cable between the backplane and the I/O panel

Step	Action
1	Plug the NT1P78AA cable 24-pin connector into the 24-pin connector (SL0 position) located at the top center of the backplane behind the NT1P62 Fiber Peripheral Controller card.
2	Install the NT1P78AA I/O D-type patch-panel into the empty connector slot of the IPE module I/O panel.
3	Install the NT1P78AA cable RJ-11 I/O patch-panel on the empty connector slot of the IPE module I/O panel.
4	Plug the RJ-11 connector at one end of the cable into the RJ-11 receptacle on the IPE module I/O panel. This cable provides an RS422 interface to the system monitor.

Copyright © 2007-2010 Nortel Networks. All Rights Reserved.

5	Plug the other end of the cable RJ-11 connector into the J6 receptacle on the system monitor in the pedestal. Refer to Figure 11 "System monitor connections at the local site and the Fiber Remote IPE" (page 59) for connecting system monitoring cables for a column with the IPE module.
6	Check the NT8D22 System Monitor factory switch settings for the slave system monitor. Refer to Option settings, *Circuit Card Reference (NN43001-311)* ().
7	Plug the NTAK1118 9-pin D-type connector into the 9-pin D-type connector on the IPE module I/O panel.
8	Plug the other end of the NTAK1118 cable into the terminal or TTY RS-232 connector.

--End--

Connecting the fiber-optic link to the Remote IPE module

The fiber-optic link connects the optical I/O panel connector at the rear of the Remote IPE module to the optical I/O panel at the rear of the module housing the NT1P61 Fiber Superloop Network card in the local system. The routing and splicing of fiber-optic cables along the link should have been completed before the Fiber Remote IPE site installation.

Each fiber of the fiber-optic cable, at each end of the link, must be terminated with an FC/PC optical connector. This connector plugs into the FC/PC optical connector on the I/O panel.

For a single link, connect only two fibers at the end of the cable, one for the transmit side and one for the receive side. For a redundant link, four fibers must be connected.

To connect the link to the Remote IPE I/O panel, follow the steps in Procedure 9 “Connecting the fiber-optic link to the Remote IPE module” (page 67).

Procedure 9
Connecting the fiber-optic link to the Remote IPE module

Step	Action
1	Identify one link fiber as Tx_0 and another as Rx_0 for a single link, or identify four fibers as Tx_0, Rx_0, Tx_1, and Rx_1 respectively for a redundant link.
2	Identify the transmit and receive connectors on the optical I/O panel at the rear of the Remote IPE module.

Copyright © 2007-2010 Nortel Networks. All Rights Reserved.

3	Plug the link FC/PC optical connector marked Tx_0 into the I/O panel FC/PC optical connector marked Tx_0.
4	Plug the link FC/PC optical connector marked Rx_0 into the I/O panel FC/PC optical connector marked Rx_0.
5	Repeat steps 3 and 4 for the Tx_1 and Rx_1 if there is a redundant link.

--End--

Wall-mounted Fiber Remote IPE installation

To complete the installation of wall-mounted Fiber Remote IPE equipment:

- Install the wall-mounted cabinet.
- Install the cards in the cabinet.
- Connect the fiber-optic link to the fiber management frame and the Fiber Peripheral Controller card.

Installing the wall-mounted cabinet

To install NT1P70 main and NTAK12 expansion wall-mounted cabinets that house the Fiber Remote IPE, follow the steps in Procedure 10 “Installing the wall-mounted cabinet” (page 68).

The NT1P70 main wall-mounted cabinet is shipped from the factory completely installed, that is, all IPE cards and the NT1P62 Fiber Peripheral Controller card are already installed. The power supply is shipped separately. The NTAK12 expansion cabinet is optional and is ordered only if more than 10 IPE cards are required at the remote site.

To install wall-mounted Remote IPE cabinets, locate and prepare the wall area, install cabinets, connect the ground wires, and connect the power. When selecting the wall area for the cabinet installation, provide for convenient fiber-optic and subscriber loop cable routing.

Procedure 10
Installing the wall-mounted cabinet

Step	Action
1	Unpack and inspect the cabinet.
2	Level and install the mounting bracket on the wall as shown in Figure 14 "Fiber Remote IPE cabinet" (page 70). If installing the expansion cabinet next to the main cabinet, line up the two brackets and use the provided spacer between brackets.

Copyright © 2007-2010 Nortel Networks. All Rights Reserved.

3 Remove the front cover and all cards from the cabinet.

This lessens the weight of the cabinet and prevents card damage if the cabinet drops during installation.

4 Position the cabinet over the mounting bracket so that the bracket hook engages the slot at the rear of the cabinet.

The slot is located at the top center of the cabinet as shown in Figure 14 "Fiber Remote IPE cabinet" (page 70).

5 Bolt the cabinet down by using two wood screws at the lower front of the cabinet.

See Figure 14 "Fiber Remote IPE cabinet" (page 70) for the location of the screw holes.

6 Install the 6 AWG copper ground wire between the approved building ground and the ground lug at the bottom of the cabinet.

7 Repeat steps 3 through 6 for the expansion cabinet, if required.

Figure 14 "Fiber Remote IPE cabinet" (page 70) shows the Fiber Remote IPE cabinet with the mounting bracket and the mounting holes. It also shows the ground lug for ground connection.

8 Install the power supply in slot 0 in the NT1P70 main cabinet shelf and turn the power switch to OFF.

9 At the building ground end of the wire, use two fastening clamps to connect the wire to the building ground.

Insulate the connection with electric tape, and post a DO NOT DISCONNECT tag.

10 Measure the ground resistance between the ground lug at the bottom of the NT1P70 main cabinet and the ground prong on the cabinet power cord.

It should measure 0 Ohms.

If the resistance is greater then 0 Ohms, check the ground terminal on the power supply power connector continuity to the cabinet.

11 Connect the power cord from the IPE shelf power supply to the commercial AC power outlet for an AC system.

For a DC system, connect the IPE shelf power converter cord to the DC power source.

12 Disconnect the building ground wire from the ground lug on the NT1P70 main cabinet and measure the resistance between the tip of the disconnected ground wire and the ground lug on the cabinet.

If the resistance is more than 5 Ohms, check the building ground and the ground terminal at the AC wall outlet where the cabinet power cord is connected.

Copyright © 2007-2010 Nortel Networks. All Rights Reserved.

Figure 14
Fiber Remote IPE cabinet

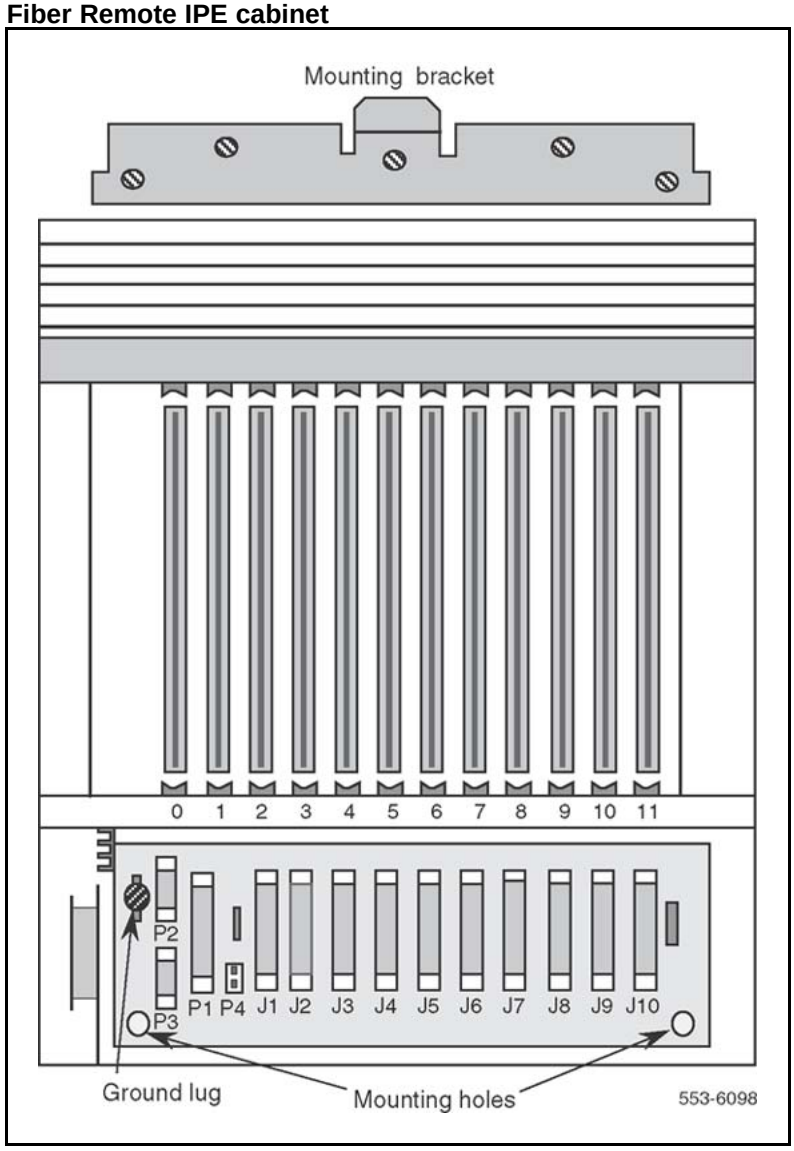

13 Disconnect the power cord from the wall outlet for the AC system or the DC power source for the DC system and reconnect the 6 AWG ground wire to the cabinet ground lug.

14 Reconnect the supply power cord to the AC power outlet for an AC system or to the DC source for a DC system.

15 If the Fiber Remote IPE requires an expansion cabinet to accommodate up to 16 IPE cards, repeat steps 1 through 14 for the NTAK12 expansion cabinet.

Copyright © 2007-2010 Nortel Networks. All Rights Reserved.

16	Connect the NT1P70 main cabinet to the NTAK12 expansion cabinet by installing the cable between connector P1 of the main cabinet and P1 of the expansion cabinet.

--End--

This completes the cabinet installation and system ground test. Now install the plug-in cards.

Installing cards in the wall-mounted cabinet

This section describes how and where to install the cards in the Fiber Remote IPE cabinet. Even though the cards are shipped in the cabinet from the factory, for safety and ease of installation, these cards were removed from the cabinet before installing it onto the wall.

NT1P63 Electro-optical packlets, which are installed on the NT1P62 Fiber Peripheral Controller card, are normally installed in the factory; however, it may be necessary to install an additional NT1P63 Electro-optical packlet on the NT1P62 Fiber Peripheral Controller card to make a single fiber-optic link into a redundant link.

Follow the steps in Procedure 11 “Installing cards in the wall-mounted cabinet” (page 71) to install the cards in the wall-mounted cabinet.

Procedure 11
Installing cards in the wall-mounted cabinet

Step	Action
1	Pull the NT1P62 Fiber Peripheral Controller card’s locking devices away from the faceplate. While holding the card by these devices, insert the card into the card guides in slot 0. Refer to Figure 16 "Link connections on the IPE cabinet" (page 75) for card positions in the shelf.
2	Slide the card into the cabinet until it engages the backplane connector, and then push the locking device levers towards the faceplate to insert the card connector into the backplane connector and lock the card in place.
3	If not already installed, install the NT1P63 Electro-optical packlet on the NT1P62 Fiber Peripheral Controller card. Insert the NT1P63 Electro-optical packlet, connector first, through the NT1P62 Fiber Peripheral Controller card faceplate opening and plug it into the connector on the NT1P62 Fiber Peripheral Controller card.

Copyright © 2007-2010 Nortel Networks. All Rights Reserved.

If only one NT1P63 Electro-optical packlet is required (for single link operation), for consistency, insert the NT1P63 Electro-optical packlet into the top connector and install the blank packlet into the bottom connector.

4 Install IPE cards in slots 2 through 11 by pulling the card locking devices away from the faceplate and inserting the cards into the card guides.

Engage the backplane connector, and lock the card in place by pressing the locking devices against the card faceplate.

--End--

Connecting fiber-optic link to the wall-mounted cabinet

In the wall-mounted cabinet configuration, the fiber-optic link connects to the fiber management frame located within 100 feet of the cabinet. From the fiber management frame, the optical cable is routed to the cabinet and connected directly to the NT1P63 Electro-optical packlet FC/PC optical connectors located on the NT1P62 Fiber Peripheral Controller card faceplate. Figure 15 "Optical cable routing for the wall-mounted cabinet" (page 74) shows a fiber-optic link connected to the NT1P63 Electro-optical packlets.

To connect the link, follow the steps in Procedure 12 “Connecting fiber-optic link to the wall-mounted cabinet” (page 72).

Procedure 12
Connecting fiber-optic link to the wall-mounted cabinet

Step	Action
1	Install optical connectors on the link fibers. Connect the link to the fiber management frame optical connectors.
2	Install the optical connectors at the end of each fiber of the NT1P79 optical cable. Insert each connector into the fiber management frame connector where the corresponding link fiber is connected. Repeat this for each NT1P79 optical cable coming from the wall-mounted Fiber Remote IPE cabinet.
3	At the Remote IPE cabinet, carefully push the cable end(s) through the protective tubing to guide, support, and protect the

Copyright © 2007-2010 Nortel Networks. All Rights Reserved.

cable under the cabinet, as shown in Figure 15 "Optical cable routing for the wall-mounted cabinet" (page 74).

> ***Note:*** When handling fiber-optic cables, do not bend the cables more than their minimum allowed bending radius of 1.4 inches (3.5 cm).

4 Wrap each cable around a plastic drum located at the bottom left-hand side of the cabinet as viewed from the front.

Extend it through the hole at the bottom of the cabinet as shown in Figure 15 "Optical cable routing for the wall-mounted cabinet" (page 74).

For a redundant link, repeat this step for the second cable.

5 At the wall-mounted cabinet, plug the fiber-optic cable with FC/PC optical connectors at one end (as supplied with the cabinet) into the Fiber Peripheral Controller card Electro-optical packlet(s) in the cabinet.

6 Identify the transmit and receive FC/PC optical connectors on the cable and the transmit and receive FC/PC optical connectors on the NT1P62 Fiber Peripheral Controller faceplate.

7 Plug the cable FC/PC optical connector marked Tx_0 into the lower FC/PC fiber-optic connector on the Electro-optical packlet marked Tx_0 located on the Fiber Peripheral Controller faceplate.

8 Plug the link's FC/PC optical connector marked Rx_0 into the upper FC/PC fiber-optic connector on the Electro-optical packlet marked Rx_0 located on the Fiber Peripheral Controller faceplate.

9 Repeat the previous two steps for the link's FC/PC optical connectors Tx_1 and Rx_1, for a redundant link.

--End--

Figure 15 "Optical cable routing for the wall-mounted cabinet" (page 74) shows the tube that protects the fiber-optic link cable from damage. It also shows the routing of the fiber-optic link to the FC/PC optical connectors on the NT1P63 Electro-optical packlets installed in the NT1P62 Fiber Peripheral Controller card.

Copyright © 2007-2010 Nortel Networks. All Rights Reserved.

Figure 15
Optical cable routing for the wall-mounted cabinet

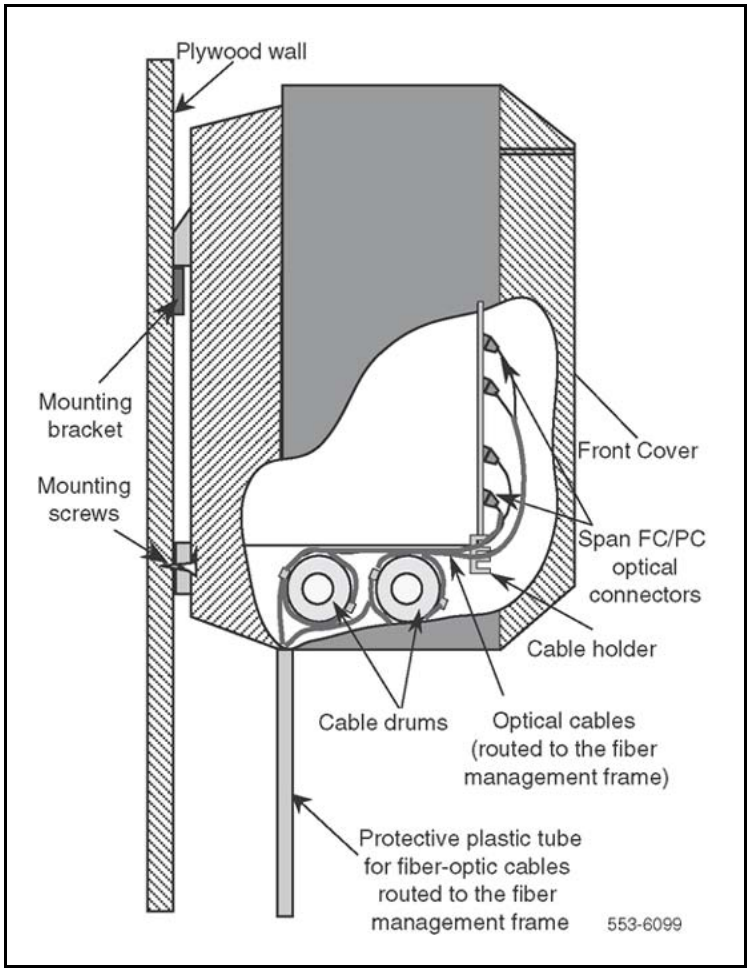

Figure 16 "Link connections on the IPE cabinet" (page 75) shows the Fiber Remote IPE cabinet with IPE cards, the NT1P62 Fiber Peripheral Controller card, and link connectors already installed.

Copyright © 2007-2010 Nortel Networks. All Rights Reserved.

Figure 16
Link connections on the IPE cabinet

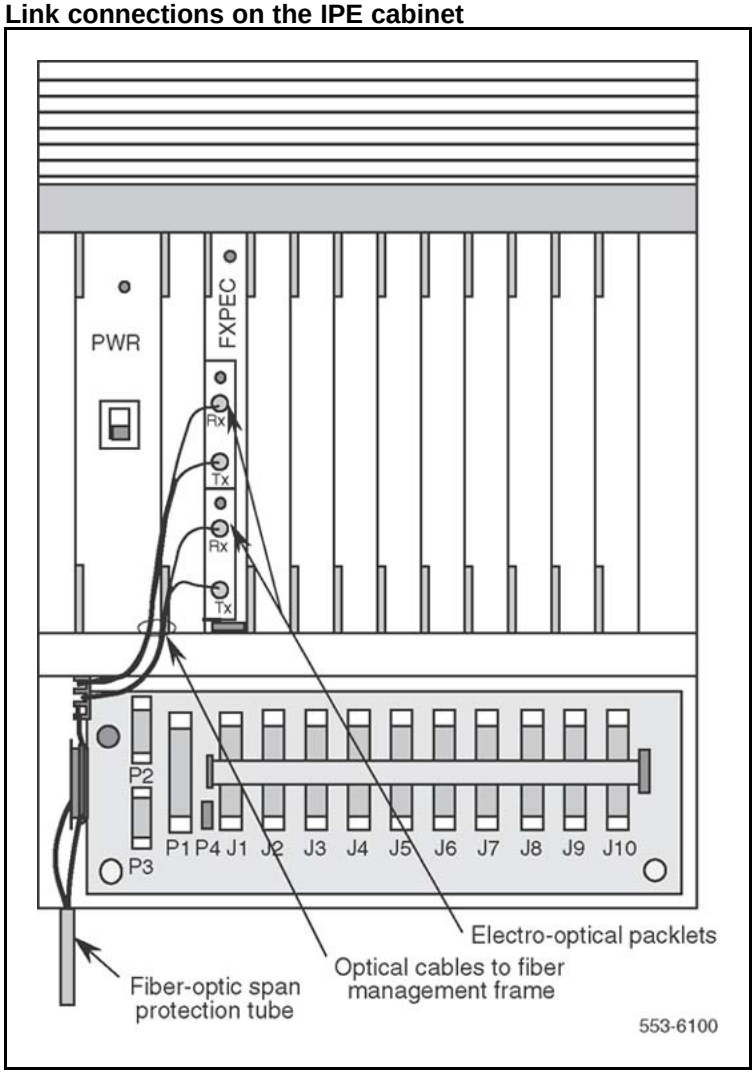

Connecting TTY and subscriber loop cables

In the cabinet option, the monitoring is performed by the NT1P62 Fiber Peripheral Controller card, which receives power-fail signals from the power supply through the backplane and sends the information to the NT1P61 Fiber Superloop Network card for processing by the local system CPU.

Copyright © 2007-2010 Nortel Networks. All Rights Reserved.

Make a terminal or a TTY connection to the MMI port and subscriber loop connections at the bottom of the cabinet as shown in Figure 17 "TTY and subscriber loop cable connections" (page 77). The terminal or the TTY is used for configuration and maintenance of the remote site. The terminal or TTY transmission characteristics are 9600 bps, 8 bits, no parity.

> ***Note:*** To configure the TTY interface characteristics on an SDI card, refer to switch settings in *Circuit Card Reference (NN43001-311)* ().

To connect a terminal or TTY to the MMI port, follow the steps in Procedure 13 “Connecting TTY and subscriber loop cables” (page 76):

Procedure 13
Connecting TTY and subscriber loop cables

Step	Action
1	Plug the 9-pin D-type connector at the one end of the NTAK1118 SDI cable into the P2 connector located at the lower left-hand side of the backplane, when viewed from the front or the cabinet.
2	Plug the other end of the NTAK1118 SDI cable into the terminal or TTY RS232 connector. To connect subscriber loop (tip and ring) cables to the cabinet’s 50-pin connectors J1 through J10, refer to Figure 17 "TTY and subscriber loop cable connections" (page 77). These cables have already been connected to the Main Distribution Frame (MDF) in the preinstallation preparation phase according to the instructions in *Cabling lines and trunks*, *Communication Server 1000M and Meridian 1 Large System Installation and Commissioning (NN43021-310)* ():
3	Remove the locking bar from connectors J1 through J10.
4	Install the 50-pin connector terminating the cable designated J1 and plug it into the connector at the bottom of the cabinet also designated J1.
5	Repeat step 2 for the remaining tip and ring cables from J2 through J10.
6	Replace the locking bar over the cable connectors just installed.
	--End--

Figure 17 "TTY and subscriber loop cable connections" (page 77) shows the subscriber loop (tip and ring) connectors that link line cards to the MDF and the terminal connection.

Copyright © 2007-2010 Nortel Networks. All Rights Reserved.

Figure 17
TTY and subscriber loop cable connections

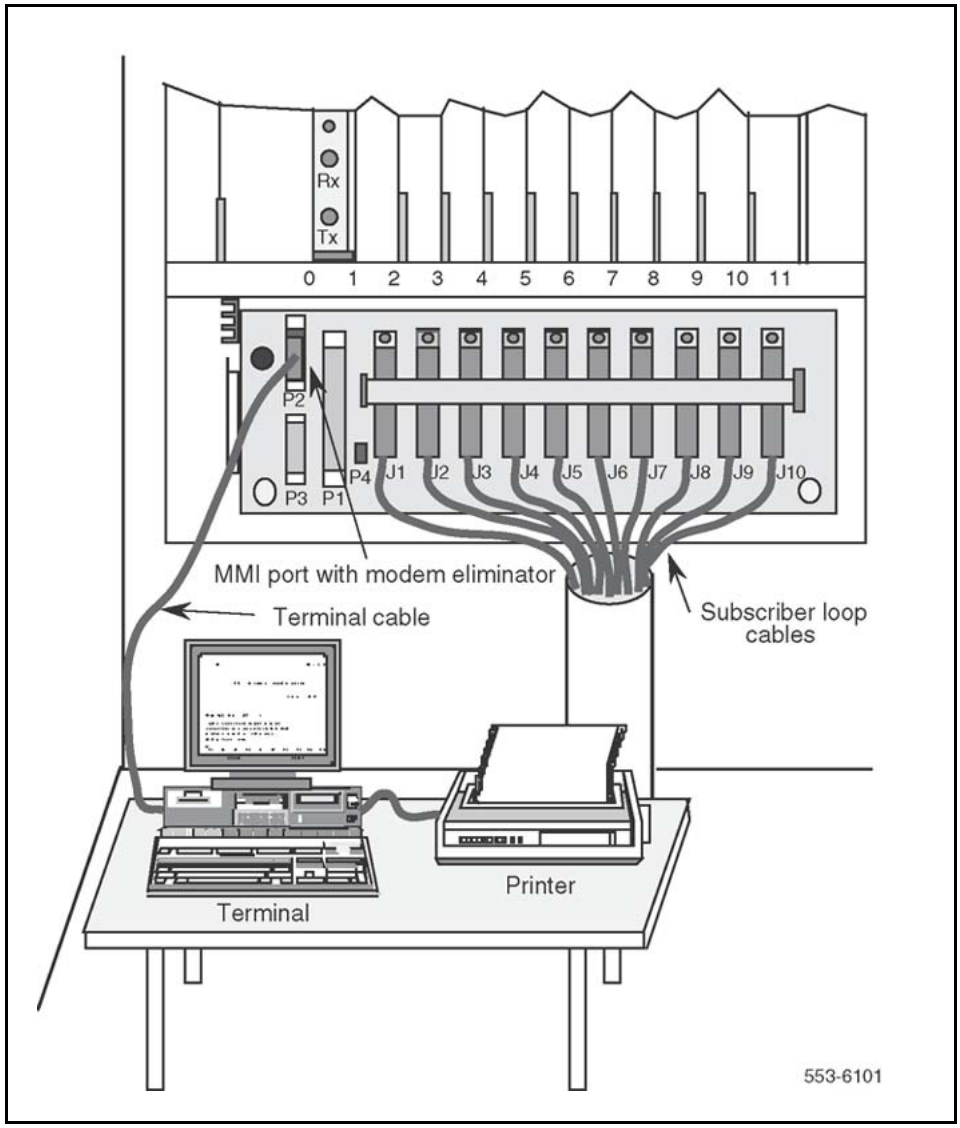

Connecting attendant console power cord to the wall-mounted Fiber Remote IPE

The wall-mounted cabinet backplane contains P4, a two-pin power connector that provides +15 V and –15 V power source for the attendant console.

To make this connection, follow the steps in Procedure 14 “Connecting attendant console power cord to the wall-mounted Fiber Remote IPE” (page 78).

Copyright © 2007-2010 Nortel Networks. All Rights Reserved.

Procedure 14
Connecting attendant console power cord to the wall-mounted Fiber Remote IPE

Step	Action
1	Connect the attendant console power cord to P4 on the wall-mounted cabinet backplane.
2	Install and configure the attendant console. Refer to *Telephones and Consoles Fundamentals (NN43001-567)* ().

--End--

Connecting PFTU to the wall-mounted Fiber Remote IPE

In the wall-mounted cabinet option, the Power Fail Transfer Unit (PFTU) is connected as shown in Figure 18 "Connecting PFTU to the wall-mounted Remote IPE cabinet" (page 79).

To make this connection, follow the steps in Procedure 15 “Connecting PFTU to the wall-mounted Fiber Remote IPE” (page 78).

Procedure 15
Connecting PFTU to the wall-mounted Fiber Remote IPE

Step	Action
1	Install the PFTU near the MDF and connect it to the MDF according to the instructions in the PFTU user manual.
2	Install the required cable between the PFTU and the P3 15-pin D-type connector on the wall-mounted cabinet. For more information on how to install the PFTU, refer to *Communication Server 1000M and Meridian 1 Large System Installation and Commissioning (NN43021-310)* ().

--End--

Figure 18 "Connecting PFTU to the wall-mounted Remote IPE cabinet" (page 79) illustrates the front view of the wall-mounted Remote IPE cabinet. It shows the connection of the P3 Auxiliary 15-pin D-type connector on the Fiber Remote IPE wall-mounted cabinet linking the cabinet to the PFTU and the MDF.

Copyright © 2007-2010 Nortel Networks. All Rights Reserved.

Figure 18
Connecting PFTU to the wall-mounted Remote IPE cabinet

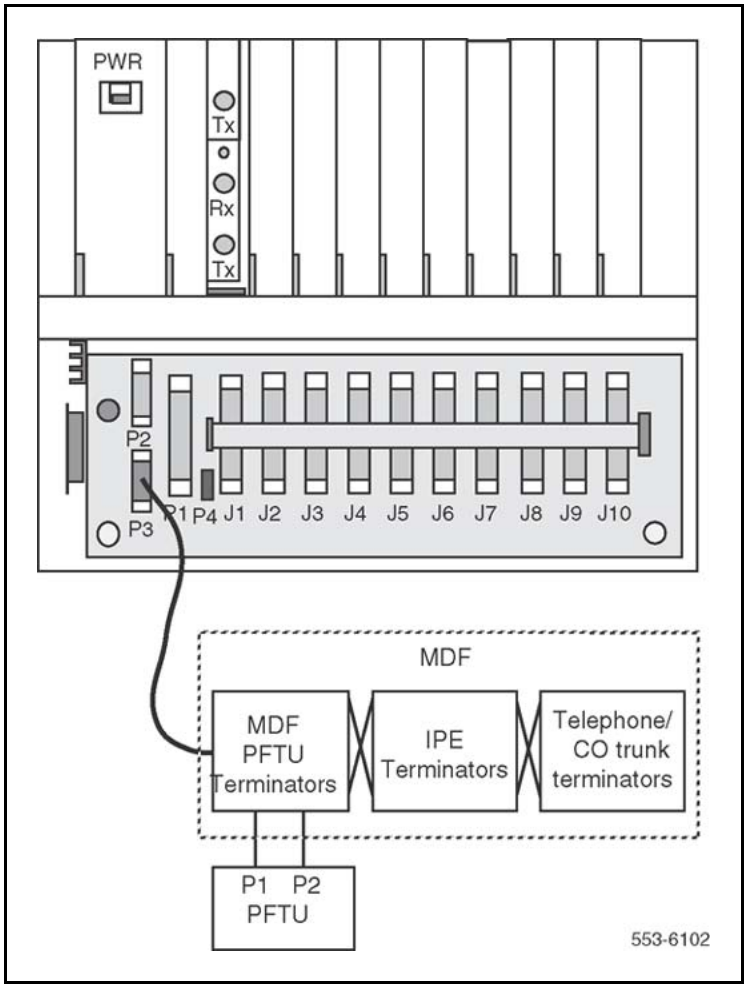

Configuring the Fiber Remote IPE

The configuration and administration of the Fiber Remote IPE and the corresponding fiber-optic equipment at the local site is identical to the standard system configuration and administration and does not require special considerations.

However, some initial setup functions must be considered at the remote site to identify the remote site system monitor functions of the wall-mounted cabinet to the local system CPU. These functions are administered over a MMI port connected to a terminal or a TTY at the remote site. These functions are:

- configuring fiber-optic cards
- configuring the system monitor address

Copyright © 2007-2010 Nortel Networks. All Rights Reserved.

- defining the loadware
- configuring the MMI port

Configuring fiber-optic cards

When the Fiber Remote IPE equipment is first installed, specify the following functions:

- Define the NT1P61 Fiber Superloop Network and NT1P62 Fiber Peripheral Controller cards as standard NT8D04 Superloop Network and NT8D01 Peripheral Controller cards.
- Load Configuration Record Program LD 97 to configure the Fiber Remote and superloop parameter data blocks.

Table 9
LD 97 - Configure the Fiber Remote and superloop parameter data blocks

Prompt	Response	Description
Fiber Remote Parameters Data Block		
REQ	CHG	Change the Fiber Remote parameters
TYPE	FIRP	Fiber Remote parameters
SUPL	0-156	Superloop number associated with the Remote IPE shelf
NNDC	5-(7)-8	No-New-Data-Calls condition threshold
XSMN	(0)–63	Wall-mounted Fiber Remote IPE cabinet only. System monitor address on the Remote IPE shelf. 0 means none equipped. For floor-standing Fiber Remote IPE column, ignore this field. PKG 286 required.
Superloop Parameters Data Block		
REQ	CHG	Change superloop data block
TYPE	SUPL	Superloop type
SUPL	0-156	Superloop number in multiples of 4
SLOT	(L) R	Network slot default (left) or right
SUPT	FIBR	Superloop type (Fiber)
XPE0	x 0 3	x= Fiber Peripheral Controller card, 0= starting segment, 3= ending segment
XPE1	<cr>	Fiber Peripheral Controller card 1. Usually not equipped in Fiber Remote IPE.
XPEC	1-95	Fiber Peripheral Controller card number. The superloop block is built with default parameters.

Copyright © 2007-2010 Nortel Networks. All Rights Reserved.

Configuring the system monitor address for a wall-mounted cabinet

Wall-mounted cabinets do not contain a physical XSM. The Remote FPEC provides XSM emulation for alarm reporting such as power fail transfer. If the remote cabinet has DC backup and commercial power fails, an XSM alarm will be generated. If the Fiber Span fails, a FIBR alarm will be generated on the TTY if PKG 286 REMOTE_IPE is equipped. PKG 286 is also required for LD 97 programming of the XSM and denotes phase 2 Fiber Remote. Prior to PKG 296 that was introduced in Release 22, the wall-mounted XSM is programmed using the MMI. The XSM number can be allocated as a regular XSM address and included in the address range of the master XSM. It cannot be used by any other XSM.

Phase 1: Define the system monitoring address using the MMI port SXSM command to identify the system monitoring address for a wall-mounted Fiber Remote IPE cabinet. Specify a unique number from 1 to 63 for this system monitoring function.

Phase 2: Define the system monitoring address using LD 97 XSMN prompt. See Table 9 "LD 97 - Configure the Fiber Remote and superloop parameter data blocks" (page 80) After the programming is complete, force download the FPEC with the following procedure:

Table 10
Force download the FPEC

Prompt	Response	Description
LD 22		
REQ	PRT	
TYPE	PSWV	Firmware version for FPEC
LD 97		
REQ	CHG	Change the Fiber Remote parameters
TYPE	FIRP	Fiber Remote parameters
SUPL	0-156	Superloop number associated with the Remote IPE shelf
XSMN	(0)-63	System monitor address on the Remote IPE shelf
LD 32		
disl	x	FNET
dsxp	y	FPEC
enll	x	
enxp	y z	current FPEC firmware version - printed in LD 22

Copyright © 2007-2010 Nortel Networks. All Rights Reserved.

Defining the loadware

Follow the steps in "Configuring the system monitor address for a wall-mounted cabinet" (page 81) to define the loadware version being downloaded using the terminal or TTY connected to the MMI port.

Procedure 16
Defining the loadware

Step	Action
1	Load Print Program LD 22 on the system TTY and print the PSDL directory by executing

Prompt	Response	Description
REQ	PRT	Request printing of peripheral software versions
TYPE	PSWV	Peripheral software versions downloaded to the Fiber Superloop Network and Fiber Peripheral Controller cards

2 Through the MMI port, enter the QVER command to check the firmware and loadware version on the Fiber Superloop Network card and the Fiber Peripheral Controller card.

3 Compare the loadware version obtained by printing the PSDL directory using Print Program LD 22 with the version obtained using the QVER command over the MMI terminal.

The two versions must be identical.

If not identical, use the SVER command at the MMI terminal to configure the PSDL number of the card equal to the number obtained by Print Program LD 22.

Parameters configured with default values, such as MMI default mode, should not be changed unless default values are not acceptable.

Command	Comment
HELP	Displays a list of commands
<ESC>L	Changes the Fiber Superloop Network or Fiber Peripheral Controller card to MMI mode.
<ESC>R	Changes the Fiber Superloop Network or Fiber Peripheral Controller card to SL-1 mode.
SDEF L/R	Sets default mode to **L**ocal or **R**emote.
QDEF	Queries the MMI port default mode. Response can be **Local** or **Remote**.

Copyright © 2007-2010 Nortel Networks. All Rights Reserved.

Command	Comment
STAD <d/m/y/h/m/s>	Sets the time-and-date.
SXSM n	Wall-mounted Fiber Remote IPE cabinet does not have a system monitor card. **n** specifies a slave system monitor number (1–63), which is identified by the local system CPU as a slave system monitor.

--End--

Configuring the MMI port

The MMI port can be configured in local (MMI) mode or remote (SL-1) mode.

MMI (local) mode

In the MMI mode, a terminal or TTY is connected to the local MMI port at the Fiber Superloop Network card. Another terminal or TTY is connected to the local MMI port at the Fiber Peripheral Controller card. Each terminal controls the local MMI functions of the card to which it is connected.

MMI commands are issued at each terminal to control local functions, or a submit (SUBM) command and string can be issued from a terminal or TTY to control the functions of the card at the opposite end of the fiber-optic link.

Note: When entering MMI commands, use upper-case letters.

The default MMI interface characteristics are configured in the Fiber Peripheral Controller card EEPROM as follows:

- Speed – 1200 bps
- Character width – 8 bits
- Parity bit – none
- stop bit – 1

Note 1: If an SDI port will be connected to this for remote TTY access, then configure the SDI port with the above configuration.

Note 2: A null modem may or may not be required, depending on SDI port configuration for DTE or DCE.

Copyright © 2007-2010 Nortel Networks. All Rights Reserved.

SL-1 (remote) mode

In the SL-1 mode, a terminal or TTY is connected to the MMI port at the Fiber Peripheral Controller card. This terminal or TTY becomes the local system TTY. At the Fiber Superloop Network card, the MMI port is connected to an SDI port; not to a terminal or a TTY.

To enable the MMI port at the Fiber Peripheral Controller card to communicate with the SDI port connected to the Fiber Superloop Network card MMI port, configure the interface characteristics as follows:

- Speed – 9600 bps
- Character width – 7 bits
- Parity bit – space

Note: A null modem connector is required in the terminal cable.

Using a Fiber Peripheral Controller card MMI terminal, place the Fiber Superloop Network card in the remote mode by entering **`>SUBM R <cr>`**.
Place the Fiber Peripheral Controller card in the remote mode by entering **`>(esc) R <cr>`**.

Therefore, no interface configuration steps are required whether the MMI port at the Fiber Remote IPE is configured in the MMI mode or the SL-1 mode.

Copyright © 2007-2010 Nortel Networks. All Rights Reserved.

Acceptance testing

Navigation

This section contains information on the following topics:

"Overview" (page 85)
"Checking the system" (page 86)
"Setting up test conditions" (page 86)
"Performing acceptance testing" (page 87)
"Voice calls" (page 87)
"Checking the MMI terminal operation" (page 89)
"Checking link protection switching" (page 90)
"Removing the test setup" (page 91)
"Generating traffic reports" (page 92)

Overview

This section describes acceptance testing of the Fiber Remote IPE. The purpose of acceptance testing is to verify that the functions and features of the Fiber Remote IPE are operating correctly.

Acceptance testing is conducted after the system has been installed, powered up, and appears to be functioning correctly; that is, all LEDs, displays, and system messages indicate that the system is operating properly. The Fiber Remote IPE acceptance testing should be conducted when:

- a previously installed system is upgraded with Fiber Remote IPE equipment and operates correctly without Fiber Remote IPE equipment
- a newly installed system with Fiber Remote IPE equipment appears to operate correctly

Acceptance testing verifies the operation of local system functions and features at the remote site equipped with the Fiber Remote IPE.

Copyright © 2007-2010 Nortel Networks. All Rights Reserved.

Acceptance testing consists of:

- checking the system
- preparing the system for testing
- testing local system functions at the Fiber Remote IPE site

Checking the system

After Fiber Remote IPE equipment has been installed and configured, visually inspect Fiber Remote IPE cards to make sure that they are operating correctly by observing their LEDs, as follows:

- On the Fiber Superloop Network card, check the card LED located at the top of the faceplate. If the LED on the Fiber Superloop Network card is not lit, and the Electro-optical packlet(s) LED is also not lit, the card and packlets are enabled and operating correctly. If the card LED is not lit and the Electro-optical packlet(s) LED is lit, the card is enabled and operating but the packlet is faulty. If the card LED is lit, the card is disabled or faulty. To enable the Fiber Superloop Network card or to correct a problem, refer to “Fault isolation and correction” (page 108) in the Maintenance section of this manual.
- On the Fiber Peripheral Controller card, check the card LED located at the top of the faceplate. If the LED on the Fiber Peripheral Controller card is not lit, and the Electro-optical packlet(s) LED is also not lit, the card and packlets are enabled and operating correctly. If the card LED is not lit and the Electro-optical packlet(s) LED is lit, the card is enabled and operating but the packlet is faulty. If the card LED is lit, the card is disabled or faulty. To enable the Fiber Peripheral Controller card or to correct a problem, go to “Fiber Remote IPE fault isolation and correction” (page 110) in the Maintenance section of this manual.
- Check the hexadecimal display on the Fiber Peripheral Controller card. Refer to Table 18 "Fiber Peripheral Controller selftest HEX codes" (page 135).

If the display and all indicator LEDs on Fiber Remote IPE equipment indicate good operating conditions, the equipment is functional. Proceed with setting up the necessary equipment for this test.

Setting up test conditions

To conduct acceptance testing, it is necessary to have a setup that can verify basic local system functions and features initiated and terminated at the Fiber Remote IPE site. It may be possible to use the system as configured at the site according to the customer requirements and not have to modify the configuration to perform the acceptance testing.

Copyright © 2007-2010 Nortel Networks. All Rights Reserved.

To conduct the acceptance testing, make sure that the Fiber Remote IPE at the remote site contains at least one IPE (line) card with at least two telephones connected to its subscriber loops. If possible, use some analog (500/2500-type) telephones to check the ringing generator and some digital telephones to check the Dual Tone Multifrequency (DTMF) operation. Also, make sure that a terminal or a TTY is connected to the MMI port through the Fiber Peripheral Controller card backplane connector.

If using wall-mounted main and extension cabinets, install at least one line card in each cabinet and connect at least one telephone to each line card subscriber loop.

Performing acceptance testing

Since functions and features at the Fiber Remote IPE site are identical to functions and features at the local site, the main purpose of acceptance testing is to verify that fiber-optic equipment is functioning correctly. This can be accomplished by:

- performing basic voice calls
- using the MMI terminal to configure and maintain Fiber Remote IPE equipment
- checking the protection switching of the fiber-optic link

Voice calls

A voice call can be established between two telephones across a network, between two telephones on the same PBX, and even between two telephones on the same line card.

Acceptance testing of Fiber Remote IPE voice calls is conducted when testing the following basic system features supported by telephones connected to subscriber loops at the remote site:

- placing a call to the remote site
- placing a call in call hold/call retrieve

Placing a call to the remote site

From the local site, place a call to a Fiber Remote IPE site by dialing a remote station directory number (extension number).

Note: The local system treats Fiber Remote IPE subscriber loops as local loops; therefore, dial only the extension number to access that station.

Copyright © 2007-2010 Nortel Networks. All Rights Reserved.

To perform a test call, follow the steps in Procedure 17 “Performing a test call” (page 88).

Procedure 17
Performing a test call

Step	Action
1	From a terminal at the local site, dial a telephone at the Fiber Remote IPE site and establish an active call connection.
2	Verify voice transmission by talking with the person on the other telephone. Make sure the speech is clear in both directions.
3	Maintain the connection and ask the person at the remote site to test basic calling features such as call hold/call retrieve.
4	Terminate the call.
	--End--

Call hold/call retrieve

Call hold is used to place an active call on hold in order to answer an incoming call or place an outgoing call. After releasing an incoming or an outgoing call, the call on hold can be retrieved. For the wall-mounted main and expansion cabinets, establish calls from stations connected to the subscriber loops in the main and expansion cabinets to verify the inter-cabinet cable connection.

To perform a call hold/call retrieve test, follow the steps in Procedure 18 “Performing a call hold/call retrieve test” (page 88).

Procedure 18
Performing a call hold/call retrieve test

Step	Action
1	From a telephone at the local site, dial a telephone at the Fiber Remote IPE remote site and establish an active call connection.
2	Verify voice transmission by talking with the person on the other telephone.
3	Have the person at the remote site press the Hold key to place the active call on hold.
4	To find out how to use the feature keys on different telephones, consult the user manual supplied with the telephone.

Copyright © 2007-2010 Nortel Networks. All Rights Reserved.

5 Have the person at the remote site place an outgoing call from the telephone at the remote site by dialing an idle telephone located at the local site.

6 Have the person at the remote site test that outgoing call by first checking the voice clarity in both directions, then hanging up.

7 Have another person call the telephone at the local site at while the first call is still on hold.

8 Answer the incoming call and place it on hold.

9 Retrieve the call first on hold.

10 Complete the first call and hang up.

11 Retrieve the second call on hold.

12 Complete the second call and hang up.

--End--

Repeat this test for terminals connected to different subscriber loops on the same card or for different subscriber loops on different line cards in the Fiber Remote IPE module or cabinet. Making these calls generates traffic, which is shown in the traffic report.

Checking the MMI terminal operation

Follow the steps in Procedure 19 “Checking the MMI terminal operation” (page 89) to check the MMI operation.

Procedure 19
Checking the MMI terminal operation

Step	Action
1	Connect an MMI terminal to the Fiber Superloop Network card at the local site and another MMI terminal at the Fiber Remote IPE site.
2	Configure the current mode of the MMI terminal to MMI mode by entering **`<esc>L`** on the MMI terminal at the local site. ***Note:*** Enter MMI commands in upper-case letters.
3	Check the status of the Fiber Superloop Network card by entering **`STAT`**.
4	Check the status of the Fiber Peripheral Controller card by entering **`SUMB STAT`**. This command is sent over the fiber-optic link to the Fiber Peripheral Controller card for execution.

Copyright © 2007-2010 Nortel Networks. All Rights Reserved.

5 Check the response to the **STAT** command for the local and remote sites.

6 Check the log file content by entering **PLOG 5** to print five log messages from the file starting with the oldest message.

7 Examine the messages.

--End--

Additional testing of the MMI terminal will be conducted when testing the link protection switching.

Checking link protection switching

To verify that the link protection switching is operating correctly, conduct the following tests with the link:

- manual switch-over
- forced switch-over

Note: These tests can be conducted only with a redundant link configuration.

Manual switch-over testing

This is a unidirectional switch-over. To conduct the manual switch-over test, follow the steps in Procedure 20 “Testing manual switch-over” (page 90).

Procedure 20
Testing manual switch-over

Step	Action
1	Check the status of the fiber-optic link by entering **QFIB** from the MMI terminal. Make sure that both the PRIM and the SEC links are functional without an alarm condition.
2	Establish a call from the Fiber Remote IPE to the local site. Refer to “Voice calls” (page 87) for instructions on how to establish the call.
3	Assuming that the traffic is carried by the primary link, switch the link to the secondary packlet by entering **MANS SEC** from the MMI terminal.
4	Verify that the call is still established over the secondary link.
5	Unplug the Tx_1 FC/PC optical connector from the secondary packlet at the local or remote site.

Copyright © 2007-2010 Nortel Networks. All Rights Reserved.

The transmit path should automatically switch to the primary packlet.

The call should continue to be established.

6 Reconnect the Tx_1 FC/PC optical connector.

--End--

Forced switch-over

Forced switch-over is used when replacing an Electro-optical packlet. To test forced switch-over, follow the steps in Procedure 21 “Testing forced switch-over” (page 91).

Procedure 21
Testing forced switch-over

Step	Action
1	Check the status of the fiber-optic link by entering **QFIB** from the MMI terminal. Make sure that both the PRIM and the SEC links are functional without an alarm condition.
2	Establish a call from the Fiber Remote IPE to the local site. Refer to “Voice calls” (page 87) for instructions on how to establish the call.
3	Assuming that the traffic is carried by the primary link, switch the link to the secondary packlets by entering **FORC SEC** from the MMI terminal.
4	Verify that the call is still established over the secondary link.
5	Clear forced switch-over by entering **MCLR** from the MMI terminal to enable automatic switch-over capability.

--End--

Removing the test setup

After acceptance testing has been completed and the results show that the system is operating correctly, remove the setup used to conduct the testing and restore equipment according to the customer configuration.

If the actual customer configuration was used to perform these tests, it is not necessary to change or remove the setup.

Copyright © 2007-2010 Nortel Networks. All Rights Reserved.

Generating traffic reports

Use the system traffic report to identify calls made during acceptance testing from the Fiber Remote IPE site and to the Fiber Remote IPE site.

To verify traffic generated during acceptance testing, enter the following command to print the report:

TOPS r r

The parameters for this command are:

r r are report options. This must be one or more of the following numbers:

1 = Network traffic report

2 = Service loops traffic report

5 = Selected terminals traffic report

For more information on traffic reports, refer to the Traffic control program LD 2 in *Software Input Output: Administration (NN43001-611)* ().

Copyright © 2007-2010 Nortel Networks. All Rights Reserved.

Maintenance

Navigation

This section contains information on the following topics:

"Overview" (page 93)

"Diagnostic tools" (page 94)

"Using maintenance programs" (page 103)

"Isolating and correcting faults" (page 106)

"Fault isolation and correction" (page 108)

"Fiber Remote IPE fault isolation and correction" (page 110)

"Replacing Fiber Remote IPE cards" (page 125)

Overview

This section describes maintenance tools and procedures for identifying Fiber Remote IPE faults, locating defective equipment, correcting problems by fixing or replacing defective equipment, and verifying the operation of Fiber Remote IPE after corrections or replacements have been made.

Fiber Remote IPE maintenance deals with two types of problems:

- installation – created during the installation of an entire system with the Fiber Remote IPE or during the addition of the Fiber Remote IPE to an existing system
- operation – occur when components fail or equipment is accidentally disconnected during normal system operation

In either case, identifying the problem should be approached systematically. A problem may have more than one cause. To isolate the cause, a knowledge of Fiber Remote IPE operation is required. This information can be found in "Product description" (page 15). Once the

Copyright © 2007-2010 Nortel Networks. All Rights Reserved.

cause is identified, the problem can be corrected by replacing the defective card, connecting accidentally-disconnected cables, or correcting the software problem.

CS 1000M Large Systems and Meridian 1 Large Systems provide built-in self-diagnostic indicators and software and hardware tools. These diagnostic facilities simplify system troubleshooting and reduce Mean-Time-To-Repair (MTTR).

This document focuses on the maintenance of Fiber Remote IPE equipment at the remote site and in the local system. It is assumed that local non-Fiber Remote IPE functions were operating operate correctly before beginning to diagnose Fiber Remote IPE problems.

System installation and maintenance guide sections of *Communication Server 1000M and Meridian 1 Large System Maintenance (NN43021-700)* () describe how to maintain the entire system. This section describes how to maintain the Fiber Remote IPE equipment as an integral part of the local system.

Diagnostic tools

Diagnostic tools are used to troubleshoot problems in the system, including problems with the Fiber Remote IPE. When diagnosing Fiber Remote IPE problems, it can be necessary to use more than one tool.

Hardware diagnostic tools

Hardware diagnostic tools consist of:

- card self-tests
- LED indicators
- display codes
- enable/disable switches

Self-test

A self-test is automatically performed by each Fiber Remote IPE card:

- when the card is inserted in an operating system module
- when the card is enabled
- when the system is powered up or reset.

A self-test can also be performed on a card using software commands.

Copyright © 2007-2010 Nortel Networks. All Rights Reserved.

A self-test checks general card functions and determines if they are operating correctly. When the cards are first inserted, the card automatically starts its self-test and immediately indicates its operating status.

LED indicators

Cards are equipped with red LED indicators, Module power supplies are equipped with green LED indicators. These indicators show the status of each card or power supply.

Figure 19 "Fiber Superloop Network card" (page 95) shows the NT1P61 Fiber Superloop Network card. It shows the LED that indicates the status of the Fiber Superloop Network card and an LED on each Electro-optical packlet that indicates the status of the link.

Figure 19
Fiber Superloop Network card

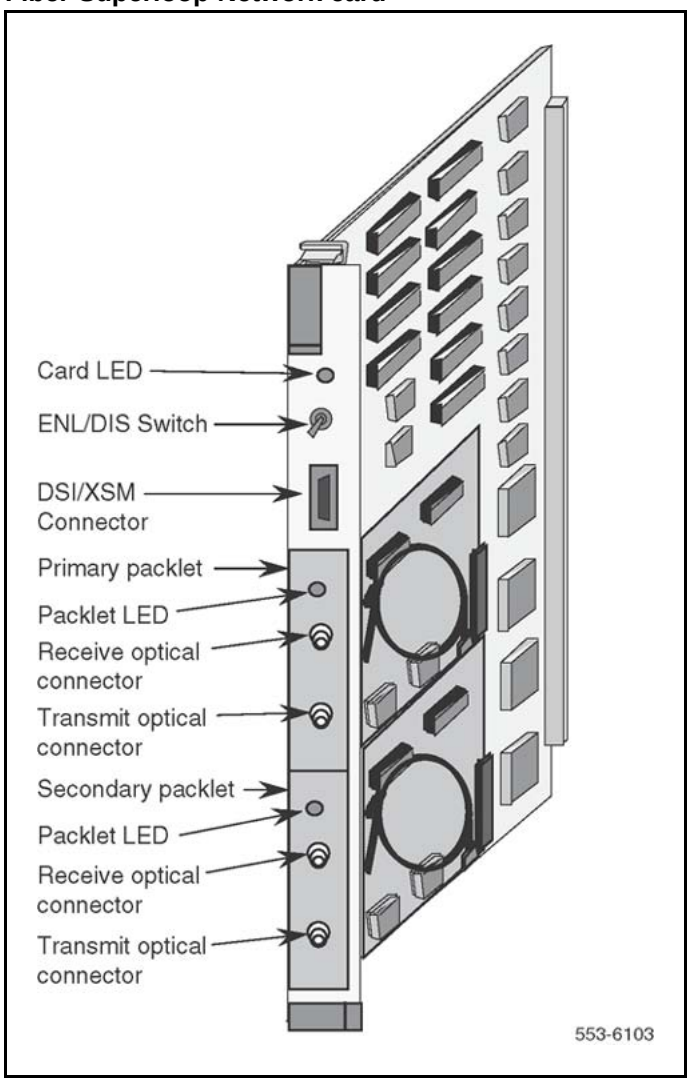

Copyright © 2007-2010 Nortel Networks. All Rights Reserved.

Display codes

Some cards, such as the NT1P62 Fiber Peripheral Controller card, are equipped with an alphanumeric display on the faceplate.

Figure 20 "Fiber Peripheral Controller card" (page 97) shows two seven-segment displays on the faceplate of the Fiber Peripheral Controller card. The displays are used to automatically indicate the card status and identify possible faults with the card. These codes are displayed in hexadecimal notation and are listed and interpreted in Table 18 "Fiber Peripheral Controller selftest HEX codes" (page 135) and in section (HEX) in *Software Input Output: Administration (NN43001-611)* ().

Codes displayed on the common equipment cards are logged into a history file and can be printed and reviewed to analyze the sequence of events leading to the presently displayed status. The last 16 codes displayed by the Fiber Peripheral Controller card are stored in memory and can be reviewed and then cleared by using Network and Signaling Diagnostic Program LD 30.

Figure 20 "Fiber Peripheral Controller card" (page 97) shows the NT1P62 Fiber Peripheral Controller card with two hexadecimal displays that display the status of the card. It shows the card LED that indicates the state of the Fiber Peripheral Controller card and an LED on each Electro-optical packlet that indicates the status of the link.

Copyright © 2007-2010 Nortel Networks. All Rights Reserved.

Figure 20
Fiber Peripheral Controller card

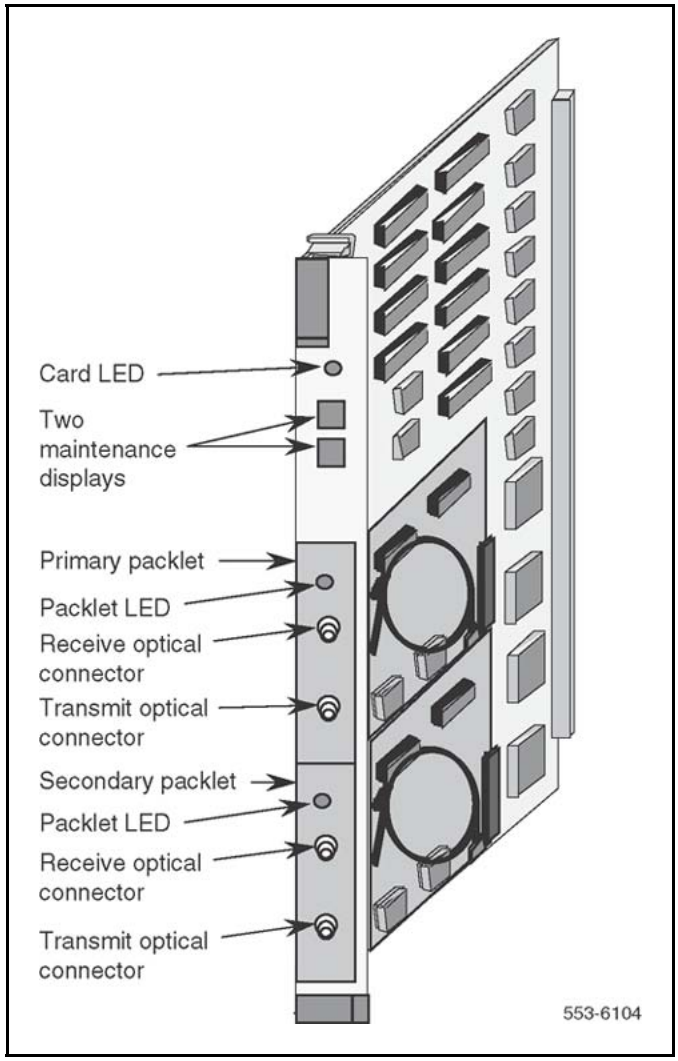

Enable/disable switch

Some cards, such as the Fiber Superloop Network card shown in Figure 19 "Fiber Superloop Network card" (page 95), are equipped with an ENL/DIS switch.

This ENL/DIS switch is located on the card's faceplate. It is used to disable the card before removing it from an operating system without disrupting other system functions. After repairing or replacing the card, place it back in service by setting the switch to the enable (ENL) position.

Copyright © 2007-2010 Nortel Networks. All Rights Reserved.

System monitors and alarms

System monitoring units continuously monitor the environmental and power status of the system and the individual system modules including the Fiber Remote IPE equipment.

The system monitor issues alarms when:

- CPU fails or system reloads
- main power source is lost
- power supply in the modules fails
- system temperature exceeds limits because of blower or fan failure

Alarms are based on the type and severity of faults reported by the system monitors and indicators. These alarms are divided into:

- major alarms, which indicate serious problems that require immediate attention
- minor alarms, which indicate isolated faults relative to a limited number of call connection problems that do not require immediate attention

Fiber Remote IPE issues a red alarm when a major alarm occurs at the local site and a yellow alarm when a major alarm occurs at the Fiber Remote IPE site.

Software diagnostic tools

Software diagnostic tools are used to monitor the system status, provide the ability to test various system functions and equipment suspected of being faulty, and log and display system fault history. These tools include:

- resident diagnostic programs
- interactive nonresident diagnostic programs
- History File
- user reports

Resident programs

Resident programs are diagnostic and administration programs that continuously monitor system operation and report faults and generate system messages, which are displayed on the system terminal or printed on a system printer.

These system messages are listed in *Software Input Output: Administration (NN43001-611)* ().

Copyright © 2007-2010 Nortel Networks. All Rights Reserved.

These messages are:

- maintenance display codes listed under HEX that indicate status and error conditions in the system
- maintenance messages listed under XMI in Appendix A and reported to the terminal over the MMI port that indicate status and faults with Fiber Remote IPE equipment
- error messages listed under ERR that indicate hardware faults and under BUG that indicate software faults
- overload messages that indicate faulty peripheral cards listed under OVD
- error messages listed under PWR that indicate power faults
- fault history file that can be printed and reviewed to identify fault events leading to the present status

Resident administration programs provide automatic system administration routines that facilitate system initialization and fault recovery.

These are:

- overlay loader program that finds, loads, and executes all nonresident programs selected to run as midnight and background routines
- system loader program that downloads the call processing programs and starts checking main memory when executing sysload
- system initialization program that automatically starts after the system loader program completes the downloading process and outputs the initialization messages listed under INI in *Software Input Output: Administration (NN43001-611)* ()

Nonresident programs

Nonresident programs can be interactive or automatically-executed programs. These programs are stored on the system hard disk or floppy disks and are downloaded by the overlay loader program to system memory on demand or at a predetermined time of day (for example, midnight and background routines testing).

Copyright © 2007-2010 Nortel Networks. All Rights Reserved.

Access interactive programs through a maintenance terminal or a maintenance telephone, as described in this section. These programs are used to do the following:

- test the equipment and place lines and trunks out of service when testing or faulty and back into service when testing is completed or the line or trunk has been repaired or replaced
- verify the status of a fault
- verify that a fault has been corrected and the equipment is operating correctly

Use Configuration Record Program LD 17 to select a number of nonresident diagnostic programs. LD 17 is a program that selects other diagnostic programs and executes them automatically as midnight and background routines. These programs test the entire system and print a report that lists the test results.

Alternatively, manually select continuity tests that check continuity between the Fiber Superloop Network card and the Fiber Peripheral Controller card, as well as other network and peripheral controller cards. Specify these tests in Background Signaling and Switching Diagnostics LD 45.

Superloop and Controller cards maintenance commands

The maintenance commands of the NT1P61 Fiber Superloop Network card and NT1P62 Fiber Peripheral Controller card are identical to those of the standard NT8D04 Superloop Network and NT8D01 Peripheral Controller cards.

The maintenance commands are used to manipulate the operational status and perform diagnostic tests on these cards. The commands are located in Network and IPE Diagnostic LD 32, which can be accessed using either the administration terminal or the maintenance telephone.

Table 11 "Network superloop maintenance commands" (page 100) lists superloop maintenance commands provided by Network and IPE Diagnostic LD 32.

Table 11
Network superloop maintenance commands

Maintenance command	Maintenance command description
DISL loop	Disables network loop
ENLL loop	Enables network loop
DISS l s	Disables a shelf or module
ENLS l s	Enables a shelf or module

Copyright © 2007-2010 Nortel Networks. All Rights Reserved.

Table 11
Network superloop maintenance commands (cont'd.)

Maintenance command	Maintenance command description
DSXP x	Disables Peripheral Controller and all IPE cards
ENXP x	Enables Peripheral Controller and all IPE cards
ENXP XPEC x	Enables Peripheral Controller but not IPE cards
STAT loop	Displays status for one or all network loops
SUPL loop	Prints data for one or all superloops
XNTT loop	Self-test on a Network card for a specific loop
XPCT x	Self-test on Peripheral Controller x
XPEC x	Prints data for Peripheral Controller x

Fiber Remote IPE MMI maintenance commands

Fiber Superloop Network cards and Fiber Peripheral Controller cards provide a Man-Machine Interface (MMI) port to connect a configuration and maintenance terminal. Use this terminal to directly issue commands to these cards to test and maintain fiber-optic equipment, including the fiber-optic link.

Table 12 "MMI maintenance commands" (page 101) list these commands. For a detailed description of these commands, refer to "System messages and MMI commands description" (page 131), where they are listed in alphabetical order.

Table 12 "MMI maintenance commands" (page 101) lists MMI commands directly issued to the system over the MMI terminal. They can be connected to the Fiber Superloop Network card and the Fiber Peripheral Controller card MMI port.

Table 12
MMI maintenance commands

Maintenance command	Maintenance command description
HELP	Displays the list of MMI commands
<esc>L	Changes the MMI terminal to Local mode
<esc>R	Changes the MMI terminal to Remote mode
SUBM R	Places the Fiber Superloop Network card in Remote mode
SU R	Sets Fiber Superloop Network card in Remote mode when the MMI port is connected to an SDI port
SDEF L/R	Sets the default mode to Local or Remote
QDEF	Checks the default mode of the MMI port

Copyright © 2007-2010 Nortel Networks. All Rights Reserved.

Table 12
MMI maintenance commands (cont'd.)

Maintenance command	Maintenance command description
STAD dd mm yy hh mm ss	Sets time and data
TTAD	Checks time and date
SUBM string	Sends a command to the other side of the link, where string = actual command
PLOG{n}	Prints n messages from a log file
NLOG {n}	Prints the next n messages from a log file
CLOG	Clears the log file
STAT	Checks the card status
IDC M/P/S	Checks the card ID for the main board, the primary packlet, or the secondary packlet
SXSM n	Sets system monitor port number for the wall-mounted Fiber Remote IPE
QXSM	Checks the system monitor port number
TEST P/S	Tests the main card if a parameter is not specified (card must be disabled). Tests idle primary packlet if P is specified, or tests idle secondary packlet if S is specified. When testing a packlet, the packlet must be idle, but the card can be enabled and active.
SVER version	Sets PSDL version that matches the card version. It should also match the loadware version of the standard Superloop Network or Peripheral Controller card.
QVER	Checks the firmware and loadware version
QFIB	Checks the status of fiber-optic links
MANS PRI/SEC	Manual switch to primary or secondary link
FORC PRI/SEC	Forced switch to primary or secondary link
MCLR	Clears manual switch, resumes automatic backup

History File

Large Systems can be equipped with the History File feature, which allows the system to log events such as:

- service changes
- maintenance messages
- software errors
- initialization and system download messages
- traffic messages

Copyright © 2007-2010 Nortel Networks. All Rights Reserved.

These messages can be printed and analyzed to identify the events that led to the status. The type of messages to store can be selected.

For information on how to select messages to be logged into the History File, refer to *Features and Services Fundamentals (NN43001-106)* ().

User reports

User-reported faults may indicate what failed in the system. These include:

- major alarms reported by attendant
- calls with no ringing or no dial tone
- trouble with calls in specific Fiber Remote IPE modules
- trouble with specific telephones
- calls that cannot be transferred

Using maintenance programs

To use maintenance programs, access the system using a maintenance terminal or maintenance telephone.

Logging in on the maintenance terminal

Follow the steps in Procedure 22 “Logging in on the maintenance terminal” (page 103) to log in on the maintenance terminal.

Procedure 22
Logging in on the maintenance terminal

Step	Action
1	To access the program, enter a valid password. Type **LOGI** and press the Enter key. The following appears: `PASS?`

2	Type the password and press **Enter**.
	Blanks will appear on the screen as the password is typed.
	If the following is displayed:
	`OVL015`
	`>`
	then an invalid password was entered. Type the password again and press **Enter**.
	If a valid password was entered, the following is displayed:

Copyright © 2007-2010 Nortel Networks. All Rights Reserved.

```
>
```

This means login was successful. Communication with the system was established and the program can be accessed.

--End--

Accessing the program

To access any program on the system, type LD followed by a space and the program number after the > prompt and press **Enter**.

For example, to access Network and IPE Diagnostic Program LD 32, type `LD 32` after the `>` prompt and press **Enter**. At the prompt, type the command to be executed.

For example, to enable network loop 3 that is supported by a Fiber Superloop Network card, at the prompt type:

```
.ENLL 3
```

This command enables the Fiber Superloop Network card supporting network loop 3.

Responding to error messages

If incorrect information is entered after a prompt, the program displays a warning message or an error message. The prompt is displayed again below the error message so the correct information can be entered.

Exiting the program

To exit the program, type `****` and press **Enter**. The following is displayed.

```
>
```

This indicate that the program was successfully exited. Access another program or log out.

Logging out

After exiting the program, if not accessing another program, log out.

To log out, type `LOGO` at the `>` prompt and press **Enter**.

Logging in and using a maintenance telephone

A telephone can be used as a maintenance terminal if its class-of-service as MTA (maintenance set allowed) is defined in LD 11. This feature enables access to diagnostic programs in the system and executes a limited set of maintenance commands to test system functions.

Copyright © 2007-2010 Nortel Networks. All Rights Reserved.

To enter commands on a maintenance telephone, use its key pad. The numbers on the key pad represent numbers and letters normally used on a keyboard.

Table 13 "Keyboard to key pad translation table" (page 105) shows the translation from a terminal keyboard to a telephone key pad.

Table 13
Keyboard to key pad translation table

Terminal keyboard				Telephone key pad
			1	1
A	B	C	2	2
D	E	F	3	3
G	H	I	4	4
J	K	L	5	5
M	N	O	6	6
P	R	S	7	7
T	U	V	8	8
W	X	Y.	9	9
			0	0
			Space or #	#
			Return	##

To use a diagnostic program, follow the steps in Procedure 23 “Using a diagnostic program” (page 105).

Procedure 23
Using a diagnostic program

Step	Action
1	Press the prime DN key.
2	Place the telephone in maintenance mode by entering **xxxx91** on the key pad, where **xxxx** is the customer’s Special Prefix number (SPRE) as defined in LD 15. Normally xxxx is 1; therefore, enter `191`.
3	Enter `**` to determine if the communication link is idle. If a busy tone is heard, the system is in session with another maintenance or administration telephone. Enter `****` to force the other terminal to log out. If a busy tone is not heard, the system is idle and can be accessed.

Copyright © 2007-2010 Nortel Networks. All Rights Reserved.

4	Enter **53#xx##** to load a diagnostic program, where **xx** is the program number. For example, to load Network and IPE Diagnostic Program LD 32, enter **53#32##**.
5	Perform the maintenance tasks by executing the maintenance commands resident in the program that was loaded. For example, from Network and IPE Diagnostic Program LD 32 a fiber network loop by can be disabled by entering **DISL loop**) where loop is the Fiber Superloop Network card loop number. To execute this command, enter **3475#3##** on the key pad.
6	Press the **Release** key to log out.

--End--

Isolating and correcting faults

Based on whether Fiber Remote IPE equipment has just been installed and is not yet operational, or it had been operating correctly and is now faulty, try to determine what may be the most probable cause of failure.

Types of faults

Problems can occur in the following areas:

- Hardware
- Configuration
- Software

The types of faults to isolate and correct depend on when the faults occur during installation or in a previously operating system. For example, in a newly-installed system, the fault can be in any or all of the three areas; however, in a previously-operating system, the fault is probably be in the hardware.

Fault isolation steps

Follow the steps in Procedure 24 “Isolating faults” (page 106) to isolate system and Fiber Remote IPE faults using the diagnostic tools described in this section:

Procedure 24
Isolating faults

Step	Action
1	Observe and list the symptoms the system is exhibiting.

Copyright © 2007-2010 Nortel Networks. All Rights Reserved.

Typical symptoms can include:

- Fiber Superloop Network card or Fiber Peripheral Controller cards lighting their red LEDs
- Fiber Peripheral Controller card faceplate display showing a fault code
- Electro-optical interface LEDs indicating no transmission on the fiber-optic link
- common equipment or power supplies having their green LEDs turned off
- maintenance codes being displayed on some of the common equipment
- network cards displaying codes that indicate faults

2 Note whether Fiber Remote IPE was just installed and has not been operating, or if it has been operating correctly and is now faulty.

Based on this, refer to "Newly installed Fiber Remote IPE" (page 107) or "Previously operating Fiber Remote IPE" (page 108) for lists of the most common problems.

3 Take the action recommended by the fault isolation and correction tables, which provide a guide through fault isolation steps and recommend what test procedures to use.

4 If, after following the diagnostic procedures, Fiber Remote IPE still does not operate correctly, contact the field service representative.

--End--

Newly installed Fiber Remote IPE

Problems that occur during the installation of an entire system, including the Fiber Remote IPE, are usually caused by one or more of the following:

- improperly installed cards
- loose or improperly-connected external communication cables, fiber-optic patchcords, or fiber-optic link cables
- incorrect software version
- incorrect Fiber Remote IPE configuration

These types of problems can also occur when:

Copyright © 2007-2010 Nortel Networks. All Rights Reserved.

- installing additional Fiber Remote IPE equipment into an already operating system
- installing a new software version or changing Fiber Remote IPE configuration

Refer to Table 15 "Fiber Remote IPE equipment problems" (page 110) for the symptoms related to problems with a newly-installed Fiber Remote IPE.

Previously operating Fiber Remote IPE

Problems that occur during the normal operation of Fiber Remote IPE are usually caused by:

- faulty equipment
- accidental disconnection of cables
- improper environmental conditions

Check the symptoms listed in Table 15 "Fiber Remote IPE equipment problems" (page 110) related to problems with a previously operating Fiber Remote IPE.

Fault isolation and correction

To isolate Fiber Remote IPE faults, first isolate and correct common equipment, network equipment, and power equipment faults and make non-Fiber Remote IPE functions operational. Then proceed with fault isolation and fault correction of Fiber Remote IPE functions.

To help isolate the problems in a systematic way, use the fault isolation and correction tables. These tables provide a guide through logical steps to determine the cause of the problem, based on the visual fault indicators and system fault messages.

Table 14 "Common and network equipment problems" (page 109) lists problem symptoms, a diagnosis of the problem based on the observed symptoms, and the recommended solution to the problem.

After isolating and correcting common equipment and network equipment faults, all the other system and card faults might clear and the system may start operating normally. If this does not occur, proceed with troubleshooting Fiber Remote IPE equipment as described in “Fiber Remote IPE fault isolation and correction” (page 110).

If the problem cannot be resolved after exhausting all the available diagnostic tools and test procedures, make a list of all the symptoms observed and contact the field service representative.

Copyright © 2007-2010 Nortel Networks. All Rights Reserved.

Table 14
Common and network equipment problems

Symptoms	Diagnosis	Solution
Green LEDs on the power equipment are not lit.	Power source lost, power defective, or disconnected power cables.	Check the power source, circuit breakers, and power cables. Refer to *Communication Server 1000M and Meridian 1 Large System Maintenance (NN43021-700)* () to correct the problem.
Maintenance terminal displays PWRxxxx messages.	Power supply, Power Distribution Unit, or Blower/Fan unit defective.	Refer to *Software Input Output: Administration (NN43001-611)* () for a list of PWR messages. Based on the message, take the appropriate action to resolve the problem.
Some red LEDs on the common, network, and/or intelligent peripheral equipment are lit and call processing has stopped.	Common or network equipment cards faulty. Intelligent peripheral equipment cards faulty.	Observe the error messages on the terminal. Check for ERR and/or BUG messages listed in *Software Input Output: Administration (NN43001-611)* (). Use this information to locate and correct the fault. Refer to *Communication Server 1000M and Meridian 1 Large System Maintenance (NN43021-700)* () for more information.
Maintenance terminal displays OVDxxxx messages.	Superloop Network Card, Network Card, and/or Peripheral Signaling Card are disabled.	Observe the OVD messages on the terminal. Check the description of these messages listed in *Software Input Output: Administration (NN43001-611)* (). Use this information to locate and correct the fault. Refer to *Communication Server 1000M and Meridian 1 Large System Maintenance (NN43021-700)* () for more information.
Maintenance display codes on the CPU cards and storage devices show fault codes.	Common equipment disk drives hardware faults, memory faults, or interrupt faults.	Refer to *Software Input Output: Administration (NN43001-611)* () for a list of all the HEX codes. Based on the maintenance display codes description, take the appropriate action and resolve the problem.

Copyright © 2007-2010 Nortel Networks. All Rights Reserved.

Table 14
Common and network equipment problems (cont'd.)

Symptoms	Diagnosis	Solution
Maintenance display codes on network cards show faults.	Indicates bus error or card problem.	Reinsert the card and observe the self-test codes. Refer to *Software Input Output: Administration (NN43001-611)* () for a list of all self-test codes and their description. If the problem continues, replace the card.
Major or minor alarms.	Common, network, and/or intelligent peripheral equipment failure.	Refer to *Communication Server 1000M and Meridian 1 Large System Maintenance (NN43021-700)* () to identify the cause of the alarm. Check the history file.

Fiber Remote IPE fault isolation and correction

After non-Fiber Remote IPE system functions are operating correctly, proceed with fault isolation and fault correction of Fiber Remote IPE equipment.

Table 15 "Fiber Remote IPE equipment problems" (page 110) deals specifically with Fiber Remote IPE service problems. To diagnose these problems, the table refers to the test procedures in this document that is most likely able to resolve them.

Table 15
Fiber Remote IPE equipment problems

Symptoms	Diagnosis	Solution
Red LED on the Fiber Superloop Network card or Fiber Peripheral Controller card permanently lit.	Card is disabled or faulty.	Go to Procedure 25 "Checking the status of Fiber Superloop Network card" (page 112), Procedure 26 "Performing the Fiber Superloop Network card self-test" (page 113), and Procedure 29 "Performing the Fiber Peripheral Controller card self-test" (page 119) in this section to check the card status and perform self-test. Also enter the **STAT** command on the MMI terminal to check the card status.
LED on the Electro-optical packlet is lit.	Fiber-optic link is in red alarm state and there is no communication over the link.	Check fiber-optic link connections and go to Procedure 27 "Performing the Fiber Superloop Network loopback tests" (page 116) to test the link using the loopback test.

Copyright © 2007-2010 Nortel Networks. All Rights Reserved.

Table 15
Fiber Remote IPE equipment problems (cont'd.)

Symptoms	Diagnosis	Solution
Link is OK but no communication with the system monitor.	System monitor address incorrect.	Define a unique address correctly. Observe the XMI messages on the MMI terminal and check the description of these messages. Use this information to locate and correct the fault.
Display on the Fiber Peripheral Controller card shows fault codes.	Card faulty: failed self-test or problem communicating with intelligent peripheral equipment.	Go to Procedure 28 "Checking the Fiber Peripheral Controller card tracking status" (page 118) and Procedure 30 "Performing the Fiber Peripheral Controller card loopback test" (page 121) to check tracking and loopback. Also, refer to *Software Input Output: Administration (NN43001-611)* () for a list of codes. Based on the maintenance display codes description, take the appropriate action to resolve the problem.
Error messages printed on the MMI terminal or the TTY.	Hardware or software problems with the Fiber Remote IPE.	Note various error messages. Refer to *Software Input Output: Administration (NN43001-611)* () for a list of these messages and their description. Based on the code's description, take the appropriate action to resolve the problem.
Red alarm is displayed on the TTY.	Fiber network and/or intelligent peripheral equipment failure.	Query the status on the fiber-optic links by entering the **QFIB** command at the MMI terminal.

If the problem cannot be resolved after exhausting all available diagnostic tools and test procedures, make a list of the symptoms and contact the field service representative.

Fiber Superloop Network card fault isolation and correction

The NT1P61 Fiber Superloop Network card provides a communication interface between the CPU and the Fiber Peripheral Controller card.

The Fiber Superloop Network card processes signaling information and data received from the Fiber Peripheral Controller card over the fiber-optic link.

Problems with the Fiber Superloop Network card can be caused by the following:

- hardware faults
- incorrect configuration
- disabled Fiber Superloop Network card
- continuity problems between the card and other network cards connected to the network bus.

Copyright © 2007-2010 Nortel Networks. All Rights Reserved.

To isolate and correct problems with the Fiber Superloop Network card, use the following procedures.

Faulty or disabled Fiber Superloop Network card

The diagnosis in Table 15 "Fiber Remote IPE equipment problems" (page 110) indicates that the Fiber Superloop Network card may be faulty or disabled. The first step in identifying the problem is to verify the status of the Fiber Superloop Network card.

Procedure 25
Checking the status of Fiber Superloop Network card

Step	Action
1	Log in on the maintenance terminal as described in "Using maintenance programs" (page 103) in this document.
2	At the `>` prompt, type **`LD 30`** and press **Enter** to access the Network and Signaling Diagnostic Program LD 30.
3	Type **`STAT loop`** and press **Enter**, where **loop** is the loop number of the Fiber Superloop Network card being tested. If the response is UNEQ =, then the loop is not equipped (that is, the Fiber Superloop Network card is not installed). If the Fiber Superloop Network card is manually disabled using LD 30, the response can be: DSBL: NOT RESPONDING – the loop is disabled and the card is not responding (the card is missing, disabled by the EBL/DIS switch, or faulty). DSBL: RESPONDING – the loop is disabled and the card is responding (that is, the card is disabled with DISL command, the Peripheral Signaling card is disabled, or an overload condition exists). ***Note:*** Overload conditions are indicated by OVDxxx messages. Refer to *Software Input Output: Administration (NN43001-611)* () for the message description and indication of the problem. x BUSY, y DSBL – the loop is enabled with x channels busy and y channels disabled. CTYF L1 L2... – loop specified in **`STAT`** command cannot receive speech from one or more loops, or there is a possible continuity test failure due to a faulty network card such as the Fiber Superloop Network card.

Copyright © 2007-2010 Nortel Networks. All Rights Reserved.

Type **ENLL loop** and press **Enter** to enable the loop, where **loop** is the Fiber Superloop Network card loop number.

A message indicating that the Fiber Superloop Network card is enabled and working is displayed on the console. Observe the red LED on the Fiber Superloop Network card. If it turns off, the Fiber Superloop Network card is functioning correctly. If the LED continues to stay lit, the Fiber Superloop Network card probably failed its self-test and that message should be displayed on the maintenance terminal.

--End--

If the NT1P61 Fiber Superloop Network card appears faulty, conduct the self-test to verify that it is actually faulty before replacing it. This test verifies the basic Fiber Superloop Network card functions and outputs a fail or pass message after the test is completed.

To perform the self-test, follow the steps in Procedure 26 “Performing the Fiber Superloop Network card self-test” (page 113).

Procedure 26
Performing the Fiber Superloop Network card self-test

Step	Action
1	Log in on the maintenance terminal as described in “Using maintenance programs” (page 103).
2	At the > prompt, type **LD 32** and press **Enter** to access the Network and IPE Diagnostic Program.
3	Type **DISL loop** and press **Enter** to disable the Fiber Superloop Network card, where **loop** is the Fiber Superloop Network card loop number to be disabled.
4	Type **XNTT loop** and press the Enter key to start the self-test, where **loop** is the Fiber Superloop Network loop number specified for self-test. If the response is: TEST PASSED The Fiber Superloop Network card passed the self-test and is functional. The card must be enabled to turn off the red LED and to start processing calls.

Copyright © 2007-2010 Nortel Networks. All Rights Reserved.

If the Fiber Superloop Network card passed the self-test, but the problem persists, the loop or other cards that interface with the Fiber Superloop Network card might be faulty. To verify the integrity of the network bus, and connections between the Fiber Superloop Network card and other network and IPE cards interfacing with the Fiber Superloop Network card, go to Procedure 27 “Performing the Fiber Superloop Network loopback tests” (page 116).

If the response is

TEST FAILED REASON: xxxx

XPE0 {NOT} CONNECTED

XPE1 NOT CONNECTED

The Fiber Superloop Network card failed the self-test and is faulty, where **xxxx** can be one of the following values:

0–ROM checksum failed
1–FLASH checksum failed
2–A21 #1 faulty
3–A21 #2 faulty
4–R71 faulty
Replace the Fiber Superloop Network card as described in Replacement procedures. An NPRxxx message may be displayed as a result of a command activated self-test if the Fiber Superloop Network card is missing, not configured, and so on.

5 Exit LD 32 by typing ******** at the prompt.

--End--

If the NT1P61 Fiber Superloop Network card self-test indicates that the card is not faulty, conduct loopback tests to isolate the problem that may exist on network cards, network buses, or fiber-optic link connections between the Fiber Superloop Network card and the Fiber Peripheral Controller card.

Loopback tests check the continuity between various interface points in the system. This is performed by sending a known signal pattern from the originating point to the destination and receiving it back at the originating point or a designated detecting point. If the pattern is detected and it matches the transmitted pattern without errors, the test verifies that the

Copyright © 2007-2010 Nortel Networks. All Rights Reserved.

tested equipment and their connections are operating correctly. However, if the pattern is not detected or it is detected with errors, the equipment or the connections between the equipment are faulty.

The loopback uses the Fiber Superloop Network card as a pattern generator and detector. The signal is transmitted by the Fiber Superloop Network card to the Fiber Peripheral Controller card and looped back to the Fiber Superloop Network card over the fiber-optic link.

> ***Note:*** For a Fiber Remote IPE with the redundant fiber-optic link, the loopback is automatically routed over the functioning link, not the faulty link. To identify the Electro-optical packlet that may be faulty, perform the packlet test at each end of the link by following the instructions in step 6 of Procedure 27 “Performing the Fiber Superloop Network loopback tests” (page 116).

Figure 21 "Loopback path for XCON test 6" (page 116) illustrates the loopback path and shows the Fiber Superloop Network card as a test pattern generator and detector.

Copyright © 2007-2010 Nortel Networks. All Rights Reserved.

Figure 21
Loopback path for XCON test 6

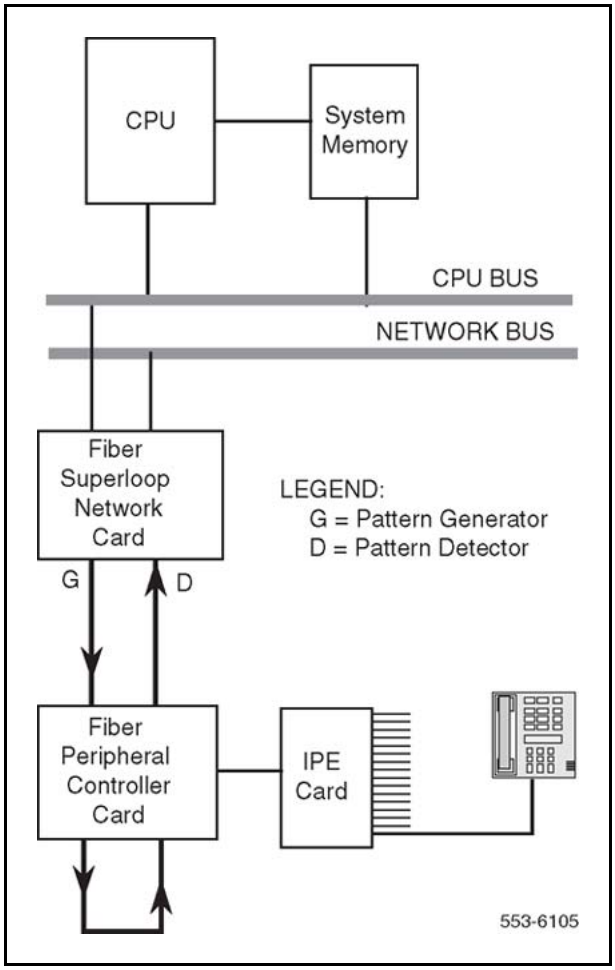

Procedure 27
Performing the Fiber Superloop Network loopback tests

Step	Action
1	Log in on the maintenance terminal as described in "Using maintenance programs" (page 103).
2	At the > prompt, type `LD 45` and press **Enter** to access the Background Signaling and Switching Program.
3	Select test condition: • Enter `XCON 0` and press **Enter** to perform only one loopback test. • Enter one test period shown in XCON H 1-255, M 1-255, Sþ1-255 and press **Enter** to select continuous loopback testing for a selected time link, where Hþ1-255 is 1 to 255

Copyright © 2007-2010 Nortel Networks. All Rights Reserved.

hours, M 1-255 is 1 to 255 minutes, and S 1-255 is 1 to 255 seconds.

Example: XCON M 5 specifies the duration of the test to be 5 minutes.

4 At the TEST prompt, type `6` and press the Enter key.

Continue responding to the prompts to configure the loopback test as follows:

Command	Range	Description
TEST	6	XCON test number
PATT	0–7	Signal pattern
TYPG	N	Fiber Superloop Network card—generat or
SUPL	0–156	Superloop in multiple of 4
SLOT	xx	Timeslots 2–31, 34–63, 66–95, 98–127
TYPD	N	Fiber Superloop Network card – detector
SUPL	0–156	Superloop in multiple of 4
LBTY	P	Loopback through Fiber Controller
LBTN	l1 s 99	Special Fiber Controller loopback channel
TAG x	0–15	Tag number assigned by the system

5 Check the loopback test results.

The results are automatically displayed if XCON 0 test conditions were specified; otherwise, specify **XSTA** or **XSTP** with the test TAG number to check the status.

XSTA obtains the status of the manual continuity test. **XSTP** stops the manual continuity test. If the results show BSDxxx messages, refer to these messages in *Software Input Output: Administration (NN43001-611)* ().

The BSDxxx messages indicate the possible causes of the problem, which should be checked to isolate the actual problem.

- If the loopback continuity test passes, the problem may be somewhere in the IPE cards.
- If the loopback continuity fails, continue with this procedure.

6 Perform the Electro-optical packlet test by using the MMI terminal or TTY at each end of the link:

Copyright © 2007-2010 Nortel Networks. All Rights Reserved.

- From the MMI terminal, enter **TEST P/S**, where **P** = primary packlet and **S** = secondary packlet.
- Connect the transmit port to the receive port with a short fiber-optic patchcord on the Electro-optical packlet being tested.
- The packlet is operating correctly if the red LED turns off and stays off during the test with the patchcord installed. Otherwise, the packlet is faulty and should be replaced.
- Repeat this step (step 6) for the other end of the link.

--End--

Fiber Peripheral Controller card fault isolation and correction

The NT1P62 Fiber Peripheral Controller card provides a communication interface between the Fiber Superloop Network card and the IPE cards housed in the Fiber Remote IPE module or cabinet.

Problems with the Fiber Peripheral Controller card can be caused by the following:

- hardware faults
- incorrect configuration
- disabled Fiber Peripheral Controller card
- continuity problems between the card and IPE cards connected to the peripheral bus.

To isolate and correct problems related to the Fiber Peripheral Controller card, use the following procedures.

Fiber Peripheral Controller card tracking status

The Fiber Peripheral Controller card can display tracking information, which shows the status of the Fiber Peripheral Controller card phase-lock loop and to what clock source it is locked. To obtain this information, follow the steps in Procedure 28 “Checking the Fiber Peripheral Controller card tracking status” (page 118).

Procedure 28
Checking the Fiber Peripheral Controller card tracking status

Step	Action
1	Log in on the maintenance terminal as described in “Using maintenance programs” (page 103) in this document.

Copyright © 2007-2010 Nortel Networks. All Rights Reserved.

2 At the > prompt, type **LD 30** and press **Enter** to access the Network and Signaling Diagnostic Program LD 30.

3 Type **RPED l s** and press **Enter**, where **l** is the loop number of the Fiber Superloop Network card and **s** is the shelf or module being tested.

The Fiber Peripheral Controller card may return one of the following codes:

C0 – clock is locked on the primary Electro-optical packlet

C1 – clock is locked on the secondary Electro-optical packlet

4 Exit LD 30 by typing ******** at the prompt.

5 Check the incoming signal.

If present, replace the packlet; otherwise, find the problem on the link.

--End--

Fiber Peripheral Controller card self-test

If the Fiber Peripheral Controller card appears faulty, conduct the self-test to verify that it is actually faulty before replacing it.

This test verifies the basic Fiber Peripheral Controller card functions and outputs a fail or pass message after the test is completed. During self-test the Fiber Peripheral Controller card displays HEX messages indicating the test performed. To identify the codes displayed, refer to Table 18 "Fiber Peripheral Controller selftest HEX codes" (page 135).

To perform the self-test, follow the steps in Procedure 29 “Performing the Fiber Peripheral Controller card self-test” (page 119).

Procedure 29
Performing the Fiber Peripheral Controller card self-test

Step	Action
1	Log in on the maintenance terminal as described in “Using maintenance programs” (page 103) in this document.
2	At the > prompt, type **LD 32** and press **Enter** to access the Network and IPE Diagnostic Program.
3	Type **DSXP x** and press **Enter** to disable the Fiber Peripheral Controller card, where **x** is the Fiber Peripheral Controller card to be disabled.

Copyright © 2007-2010 Nortel Networks. All Rights Reserved.

4 Type **XPCT x** and press **Enter** to start the self-test, where **x** is the Fiber Peripheral Controller card specified for self-test.

If the response is:

TEST PASSED

The Fiber Peripheral Controller card passed the self-test and is functional. It must be enabled to turn off the red LED and start processing calls.

Type **ENXP x** and press **Enter** to enable the card.

If the Fiber Peripheral Controller card passed the self-test, but the problem persists, the link or other cards that interface with the Fiber Peripheral Controller card may be faulty. To verify the integrity of the peripheral bus and the Fiber Peripheral Controller card, go to Procedure 30 “Performing the Fiber Peripheral Controller card loopback test” (page 121).

If the response is:

TEST FAILED REASON: xxxx

The Fiber Peripheral Controller card failed the self-test and is faulty, where **xxxx** specifies the cause of the fault. An NPRxxx message may be displayed as a result of a command activated self-test if the Fiber Peripheral Controller card is missing, not configured, and so on.

5 Exit LD 32 by typing **** at the prompt.

--End--

Fiber Peripheral Controller card loopback test

The loopback uses the Fiber Peripheral Controller card as a pattern generator and detector. The signal is transmitted by the Fiber Peripheral Controller card back to the Fiber Peripheral Controller card over a special loopback channel on the peripheral bus.

Figure 22 "Loopback path for XCON test 7" (page 121) illustrates the loopback path and shows the Fiber Peripheral Controller card as a test pattern generator and detector.

Copyright © 2007-2010 Nortel Networks. All Rights Reserved.

Figure 22
Loopback path for XCON test 7

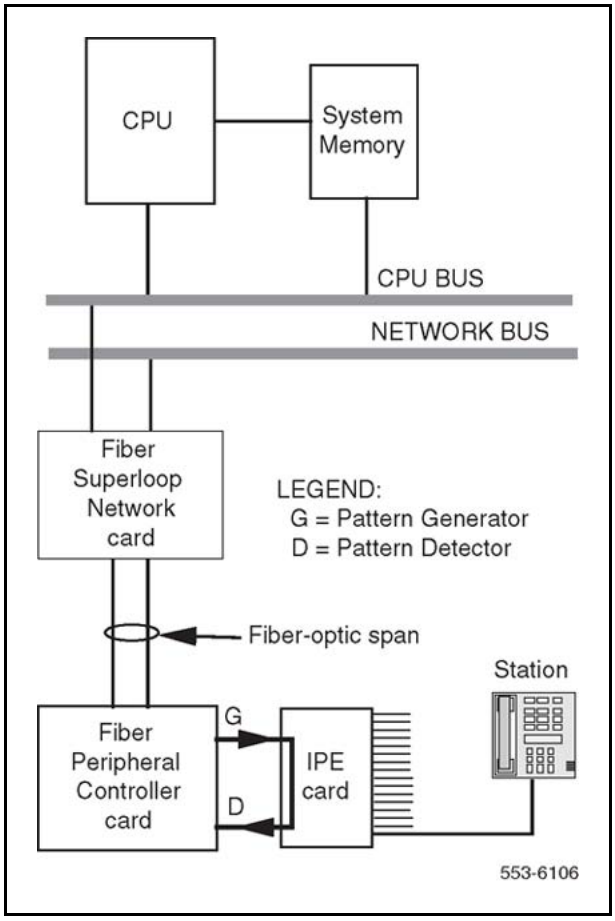

To perform the loopback test, follow the steps in Procedure 30 “Performing the Fiber Peripheral Controller card loopback test” (page 121).

Procedure 30
Performing the Fiber Peripheral Controller card loopback test

Step	Action
1	Log in on the maintenance terminal as described in “Using maintenance programs” (page 103) in this document.
2	At the > prompt, type `LD 45` and press **Enter** to access the Background Signaling and Switching Program.
3	Select test condition: • Enter XCON 0 and press **Enter** to perform only one loopback test. • Enter one test period shown in XCON H 1-255, M 1-255, S 1-255 and press **Enter** to select continuous loopback testing

Copyright © 2007-2010 Nortel Networks. All Rights Reserved.

for a selected time link, where H 1-255 is 1 to 255 hours, M1-255 is 1 to 255 minutes, and S 1-255 is 1 to 255 seconds.

Example: XCON M 5 specifies the duration of the test to be 5 minutes.

4 At the **TEST** prompt, type **7** and press the Enter key.

Continue responding to the prompts to configure the loopback test as follows:

Command	Range	Description
TEST	7	XCON test number
PATT	0–7	Signal pattern
TYPG	P	Fiber Peripheral Controller card—generator
TN	l s 99 0	Special Fiber Peripheral Controller loopback channel
TAG x	0–15	Tag number assigned by the system

5 Check the loopback test results.

The results are automatically displayed if **XCON 0** test conditions were specified; otherwise, specify **XSTA** or **XSTP** with the test TAG number to check the status. **XSTA** obtains the status of the manual continuity test. **XSTP** stops the manual continuity test.

If the results show BSDxxx messages, refer to *Software Input Output: Administration (NN43001-611)* (). The BSDxxx messages indicate the possible causes of the problem, which should be followed up to isolate the actual problem.

If the loopback continuity test passes, the problem may be somewhere in the IPE cards.

If the loopback continuity fails, replace the card.

--End--

Fault isolation and correction using MMI maintenance commands

Some testing and troubleshooting of the Fiber Remote IPE can be performed from a local or a remote MMI terminal or TTY by typing MMI commands on the terminal without loading system diagnostic programs (overlays).

These commands provide current equipment status, invoke card testing, check equipment performance, print messages from log files, and so on.

Copyright © 2007-2010 Nortel Networks. All Rights Reserved.

Checking Fiber Remote IPE using MMI commands

MMI commands can be used to maintain Fiber Remote IPE cards, and obtain fiber-optic link status.

Send these commands from the local MMI terminal to be executed by the remote site MMI terminal (or send the commands from the remote MMI terminal to be executed by the local MMI terminal) by entering **SUBM string**, where string is the actual command sent to the other side.

For example, **SUBM PLOG 10** entered at the local MMI terminal will request that the remote site prints 10 messages from the log file located in the Fiber Peripheral Controller card memory.

To obtain the Fiber Superloop Network and Fiber Peripheral Controller cards status using MMI commands, follow the steps in Procedure 31 “Checking Fiber Remote IPE using MMI commands” (page 123).

Procedure 31
Checking Fiber Remote IPE using MMI commands

Step	Action
1	Log in on the MMI maintenance terminal.
2	Type **`STAT`** to check the status or the card connected to the MMI terminal. The response is displayed: **Enabled/Disabled** **PLL: lock/unlock prim/sec** The card is enabled by the CPU, when enabled. The phase-lock loop can be locked to the incoming signal or not, and the PLL may be locked on the primary or secondary packlet.
3	Type **`TEST P/S`** and press **Enter**, where **P** tests the primary packlet and **S** tests the secondary packlet.
4	Type **`QFIB`** and press **Enter** to query the status of the fiber-optic link. The response is displayed: PRIM physical/signal/direction SEC physical/signal/direction **physical** represents the status of the Electro-optical packlet, which can be **equipped, unequipped**, or **faulty**. **signal** represents the status of the incoming signal, which can be **SF** (signal failed), **SD** (signal degrade not implemented in Rev 1 H/W), or **NA** (no alarm).

Copyright © 2007-2010 Nortel Networks. All Rights Reserved.

direction represents the direction of traffic on the link, which can be **incoming, outgoing, bothways**, or **none**.

5 Type **QALM** and press **Enter** to query the alarm status of the fiber-optic link.

The response is displayed:

PRIM alarm type
SEC alarm type

alarm on the Electro-optical packlet can be **red** (local alarm), **yellow** (remote alarm), or **clear** (no alarm).

type indicate one of the following types of alarm when it exists: **LOS, LOF, LOP**, or **FERF**.

6 Type **PRPM <prim/sec>** and press **Enter** to print the Performance Monitoring report for the primary and secondary fiber-optic links.

The format of the response is shown in Table 16 "Performance Monitoring report form" (page 124).

--End--

Table 16 "Performance Monitoring report form" (page 124) shows the format for the Performance Monitoring report. The report shows a matrix or fiber-optic link performance parameter values for different interval counters listed in the header and intervals listed in the first column.

Table 16
Performance Monitoring report form

link: prim/sec				**date:** *mm/dd/yy*			**time:** *hh/mm*	
		Section				**Line**		
Interval	**SEFS**	**CV**	**ES**	**SES**	**CV**	**ES**	**SES**	**PSC**
C	n	n	n	n	n	n	n	n
1	n	n	n	n	n	n	n	n
2	n	n	n	n	n	n	n	n
3	n	n	n	n	n	n	n	n
4	n	n	n	n	n	n	n	n
CD	n	n	n	n	n	n	n	n
PD	n	n	n	n	n	n	n	n

Section parameter description:

Copyright © 2007-2010 Nortel Networks. All Rights Reserved.

SEFS (Severely Errored Framing Seconds) – indicates the number of seconds when at least one Out-Of-Frame (OOF) or one Change Of Frame Alignment (COFA) occurred.

CV (Section Coding Violations) – counts section BIP-8 violations in the STS-3 frame.

ES (Section Errored Seconds) – indicates a second during which at least a Coding Violation (CV), an Out-Of-Frame (OOF), or a Change Of Frame Alignment (COFA) occurred.

SES (Section Severely Errored Seconds) – counts the number of seconds when at least 16 Coding Violations (CV), an Out-Of-Frame (OOF), a Change Of Frame Alignment (COFA), or Loss-Of-Signal (LOS) occurred.

Line parameter description:

CV (Line Coding Violations) – counts all line BIP-8 violations over all STS-3 frames.

ES (Section Errored Seconds) – indicates a second during which at least a Coding Violation (CV) or a line Alarm Indication Signal (AIS) state was detected.

SES (Section Severely Errored Seconds) – counts the number of seconds with at least 32 line Coding Violations (CV) when the line Alarm Indication Signal (AIS) state was detected.

PSC (Protection Switching Counts) – counts the number of times when link protection switching occurred due to Signal Fail (SF) or Signal Degrade (SD) condition.

Interval parameter description:

C (Current interval) - the status of section and line parameters at the time interval when the Performance Monitoring report is issued.

1 through **4** are subsequent four intervals.

CD – current day or the day the report was issued.

PD – previous day or the day before the report was issued.

Replacing Fiber Remote IPE cards

If troubleshooting is completed and it is determined that one or more Fiber Remote IPE cards are defective, remove the cards and replace them with spares.

Copyright © 2007-2010 Nortel Networks. All Rights Reserved.

When inserting a spare Fiber Superloop Network card or Fiber Peripheral Controller card in the module or wall-mounted cabinet, observe the card LED (the uppermost LED on the faceplate) to determine if the card passed its self-test. Package and ship the defective cards to an authorized repair center.

Unpacking and inspecting replacement cards

Follow the steps inProcedure 32 “Unpacking and inspecting replacement cards” (page 126) when unpacking and visually inspecting the replacement cards.

Procedure 32
Unpacking and inspecting replacement cards

Step	Action
1	Inspect the shipping container for damage. Notify the distributor if the container is damaged.
2	Remove the unit carefully from the container. Do not puncture or tear the container; use a utility knife to open it. Save the container and the packing material for shipping the defective card.
3	Visually inspect the replacement card for obvious faults or damage. Report any damage to the sales representative.
4	Keep cards in their antistatic bags until ready to install them. Do not stack them on top of each other.
5	Install cards. When handling the cards, hold them by their nonconducting edges to prevent damage caused by static discharge.
	--End--

Removing and replacing a card

A Fiber Remote IPE card can be removed from and inserted into a local module or the Remote IPE module or wall-mounted cabinet without turning off the power to the module or cabinet. This feature allows the system to continue normal operation when replacing a Fiber Superloop Network card in the local system or a Fiber Peripheral Controller card in the Remote IPE module or cabinet.

Copyright © 2007-2010 Nortel Networks. All Rights Reserved.

Removing and replacing a Fiber Superloop Network card

To remove and replace a Fiber Superloop Network card, follow the steps in Procedure 33 “Removing and replacing a Fiber Superloop Network card” (page 127).

Procedure 33
Removing and replacing a Fiber Superloop Network card

Step	Action
1	Disable the Fiber Superloop Network card by logging into the system terminal, and loading the Network and Intelligent Peripheral Equipment Diagnostic Program LD 32. At the prompt, enter **DIS loop**, where **loop** is the actual loop number of the Fiber Superloop Network card.
2	Set the ENL/DIS switch to **DIS**.
3	Disconnect all the fiber-optic patchcords and the SDI/System Monitor cable from the card faceplate.
4	Unlatch the card’s locking devices by squeezing the tabs and pulling the upper locking device away from the card and pressing the lower locking device downward.
5	Pull the card out of the network module and place it into an antistatic bag away from the work area.
6	Check the replacement card and make sure that the Electro-optical packlets are already installed. If not installed, install the new packlets or remove the packlets from the faulty Fiber Superloop Network card and install them on the replacement card if sure that the packlets are not faulty.
7	Set the replacement card ENL/DIS switch to **DIS**.
8	Hold the replacement card by the card locking devices and insert it partially into the card guides in the module.
9	Pull the upper locking device away from the faceplate on the card and press the lower locking device downward and insert the card firmly into the backplane connector. Press the upper locking device firmly against the faceplate and press the lower locking device upwards to latch the card inside the module.
10	Set the ENL/DIS switch on the Fiber Superloop Network card to **ENL**. The Fiber Superloop Network card automatically starts the self-test.
11	Observe the red LED on the front panel during self-test.

Copyright © 2007-2010 Nortel Networks. All Rights Reserved.

If the red LED flashes three times and stays lit, it has passed the test. Go to step 12.

If the red LED does not flash three times and then stays lit, it has failed the test. Pull the card partially out of the module and reinsert it firmly into the module. If the problem persists, troubleshoot or replace the Fiber Superloop Network card.

12 Connect the SDI/System Monitor cable and the fiber-optic patchcords to the faceplate connectors of the Fiber Superloop Network card.

13 Set the ENL/DIS switch to **ENL**.

If the upper-most red LED on the Fiber Superloop Network card faceplate turns off, the card is functioning correctly and is enabled.

The outcome of the self-test is also indicated on the system terminal or TTY (or the MMI terminal connected to the SDI/System Monitor connector on the faceplate of the Fiber Superloop Network card). If the LED stays lit, go to "Isolating and correcting faults" (page 106).

14 Tag the defective card(s) with a description of the problem and prepare them for shipment to the equipment supplier's repair depot.

--End--

Removing and replacing a Fiber Peripheral Controller card

To remove and replace the Fiber Peripheral Controller card, follow the steps in Procedure 34 "Removing and replacing a Fiber Peripheral Controller card" (page 128).

Procedure 34
Removing and replacing a Fiber Peripheral Controller card

Step	Action
1	Log in on the maintenance terminal as described in "Using maintenance programs" (page 103) in this document.
2	At the > prompt, type LD 32 and press **Enter** to access the program.
3	Type **`DSXP x`**, where **`x`** is the Fiber Peripheral Controller card, and press **Enter** to disable the card. The Fiber Peripheral Controller card is now disabled and can be removed.
4	Disconnect all the fiber-optic patchcords from the card faceplate.

Copyright © 2007-2010 Nortel Networks. All Rights Reserved.

5 Unlatch the card's locking devices by squeezing the tabs and pulling the upper locking device away from the card and the lower locking device downwards.

6 Pull the card out of the IPE module or cabinet and place it in an antistatic bag away from the work area.

7 Check the replacement card and make sure that the Electro-optical packlets are already installed.

If not installed, install the new packlets or remove the packlets from the faulty Fiber Peripheral Controller card and install them on the replacement card if sure the packlets are not faulty.

8 Hold the replacement card by the card locking devices and insert it partially into the card guides in the module.

9 Pull the upper locking device away from the faceplate on the card and the lower locking device downwards and insert the card firmly into the backplane connector.

Press the upper locking device firmly against the faceplate and the lower locking device upwards to latch the card inside the module.

The Fiber Peripheral Controller card automatically starts the self-test.

10 Observe the red LED on the front panel during self-test.

If the red LED flashes three times and stays lit, it has passed the test. Go to step 11.

If the red LED does not flash three times and stay lit, it has failed the test. Pull the card partially out of the module and reinsert it firmly into the module. If the problem persists, troubleshoot or replace the Fiber Peripheral Controller card.

11 Connect the fiber-optic patchcords to the optical connectors of the Fiber Peripheral Controller card faceplate.

For a wall-mounted Fiber Remote IPE, plug the fiber-optic link FC/PC optical connectors into the FC/PC optical connectors on the Fiber Peripheral Controller card faceplate.

12 At the: prompt in the LD 32 program, type **`ENXP x`**, where **`x`** is the Fiber Peripheral Controller card, and press the Enter key to enable the card.

If the uppermost red LED on the Fiber Peripheral Controller card faceplate turns off, the card is functioning correctly and is enabled.

The outcome of self-test is also indicated by LD 32 on the MMI terminal connected to the Fiber Peripheral Controller card. If the LED stays lit, go to "Isolating and correcting faults" (page 106) or replace the card.

Copyright © 2007-2010 Nortel Networks. All Rights Reserved.

13	Tag the defective card(s) with a description of the problem and prepare them for shipment to the equipment supplier's repair depot.
14	if the Fiber Remote IPE is operating correctly, reinstall the covers on the local module.
15	Reinstall the cover on the Remote IPE floor-standing module or the wall-mounted cabinet.
16	Terminate the session by logging out on the maintenance terminal. Type LOGO at the: prompt and press **Enter**. If using the MMI terminal, log out to complete the test and troubleshooting session.

--End--

Packing and shipping defective cards

To ship a defective card to a Nortel repair center, follow the steps in Procedure 35 "Packing and shipping defective cards" (page 130):

Procedure 35
Packing and shipping defective cards

Step	Action
1	Tag the defective card with the description of the problem.
2	Package the defective card for shipment using the packing material from the replacement card. Place the card in an antistatic bag, put in the box, and securely close the box with tape.
3	Obtain shipping and cost information from Nortel and mail the package to an authorized repair center.

--End--

Copyright © 2007-2010 Nortel Networks. All Rights Reserved.

Appendix
System messages and MMI commands description

This appendix lists system messages displayed or printed on the local system and MMI terminal or TTY and Fiber Peripheral Controller card HEX messages displayed during selftest on the two-character display located on the Fiber Peripheral Controller faceplate.

It also lists in alphabetical order MMI commands and describes the function of each command.

Table 17
System messages displayed on the system terminal of TTY

MMI port messages	
Chk_Thresh: B1 errors on primary/secondary	
	Transmission degrade: receiver signal contains occasional error at a low rate. If the message repeats, check optical cables, connectors, and optical packlets.
Chk_Thresh: R71 bad idle bytes	
Chk_Thresh: R71 crc error threshold exceeded	
Chk_Thresh: R71 End of Packet missing	
RSIG lost sync error: x	
Chk_Thresh: R71 message has been truncated	
R71 failure - Reinit	
	All these messages indicate problem with R71 (RSIG) signaling. If problem persists, do selftest.
TN read register unblocked, cnt= x	
	Problem with the Peripheral Signaling interface. Check to see if the Fiber Superloop Network card is seated correctly in its card slot.
FXNET Reset: Power-up/Watchdog/MSL-1 Boot version: xx	

Copyright © 2007-2010 Nortel Networks. All Rights Reserved.

Table 17
System messages displayed on the system terminal of TTY (cont'd.)

	Reset caused by the CPU. **xx** is the boot code version. Multiple unassisted power-up resets indicate card, backplane, or supply failure. Watchdog reset may indicate firmware problem.
FXPEC Reset: Power-up/Watchdog/MSL-1 Boot version: xx	
	Reset caused by the MPU. **xx** is the boot code version. Multiple unassisted power-up resets indicate card, backplane, or supply failure. Watchdog reset may indicate firmware problem.
Card ID: string	Prints the card ID stored in the EEPROM.
FXNET/FXPEC Main code version: xx {+pROBE}	
	This message appears at the end of the boot process.
TSIC Memory Mismatch . . . Rebuild OK	
BRSC Local Switch Memory Mismatch, IVDch = x . . . Rebuild OK	
	Hardware or firmware fault (switching mechanism). Check to see if the Fiber Superloop Network card is seated correctly in its card slot.
Stuck RSIG	
R71 CRC. cnt = x	
R71 trunc. Cnt = x	
R71 misalign. Cnt = x	
R71 no resync. Cnt = x	
	All these messages indicate problem with R71 (RSIG) signaling. If problem persists, do selftest to identify the problem, which may be hardware.
Self-test messages	
Card test started...PASSED! or FAILED!	
	In case of selftest failure, the self-test is restarted and a message is printed to indicate the cause of failure. If the fault persists, replace the card. The system will output a message to identify the fault. Failed component messages and their description are listed as follows:
MPU confidence test failed	
	The basic confidence test of the MPU of the tested card failed.
MPU int mem test failed: address= *addr* expected= *x* received = *y*	

Copyright © 2007-2010 Nortel Networks. All Rights Reserved.

Table 17
System messages displayed on the system terminal of TTY (cont'd.)

	MPU internal memory failed at address=**addr; x** is the test pattern when writing, and **y** is the read value.
EPROM test failed: calculated chksum= *checksum*	
	The data in the boot EPROM is corrupt. The field ***checksum*** is calculated by the MPU. When the EPROM is good the checksum=0.
FLASH EPROM failed: calculated chksum= *checksum*	
	The data in the FLASH EPROM is corrupt. The field ***checksum*** is calculated by the MPU. When the EPROM is good the checksum=0.
Shared RAM failed: address =*addr* expected= *x* received= *y*	
	Shared memory failed at address=**addr**; **x** is the test pattern when writing, and **y** is the read value.
Main RAM failed: address= *addr* expected= *x* received= *y*	
	Shared memory failed at address=**addr**; **x** is the test pattern when writing, and **y** is the read value.
MPU addressing failed	
	The MPU addressing modes failed the test.
EEPROM failed: pattern/address/program	
	EEPROM cannot be reprogrammed. If the test passed, the card ID is printed.
Timer 1 failed	Internal timer in the card selftest failed.
Timer 2 failed	Internal timer in the card selftest failed.
Watchdog timer failed	
	One of the MPU internal timers failed. The timer ID is indicated in the message.
DUART failed	The system monitor port UART is faulty.
A21_1 failed	Network bus interface failed.
A21_2 failed	Network bus interface failed.
RSIG failed: *type*	
	RSIG is faulty. **type** is the type of failed test, which can be **reg** (register), **cont** (continuity), **xcvr** (receivers).
Interrupt failed: vect= *n*	
	MPU interrupt test failed, where **n** is the interrupt vector number that failed.
TSIC failed: *cause*	

Copyright © 2007-2010 Nortel Networks. All Rights Reserved.

Table 17
System messages displayed on the system terminal of TTY (cont'd.)

	The FXPEC TSIC logic failed, where ***cause*** identifies the cause of failure.
A31 failed: *cause*	
	The FXPEC TSIC logic failed, where ***cause*** identifies the cause of failure.
Electro-optical packlet testing	
Packlet #n equipped! testing...PASSED! or **FAILED!**	
	If the test result is FAILED!, the additional information printed on the TTY can be one of the following:
EOI #n failed: *cause*	
	EOI packlet **n** failed and ***cause*** indicates the cause of the fault.
EOI #n loopback failed	
	The loopback test failed on the EOI #n.
P/EEPROM failed: pattern/address/program	
	EEPROM cannot be reprogrammed. If the test passed, the card ID is printed.
General card messages	
FXNET/FXPEC time: HH:MM dd/mm/yy	
	Time stamp is printed every 15 minutes, where HH:MM is hour and minute, dd/mm/yy is the day, month, and year.
Illegal command	Unrecognized command issued by the craftsperson.
Illegal parameter	Incorrect parameter entry.
MMI: string from remote: *string*	
	String is received from the FXPEC, but FXNET is in the MMI mode. ***string*** represents the actual command received from the other side.
MMI: switched to MSL-1 mode	
	SUBM R command was executed at the opposite site to place the MMI terminal in the MSL-1 mode.
PLL locked	FXNET PLL lock was successful.
PLL start bit not ready	
	Problem with PLL. Unplug the card and plug it back in. In the message reappears, replace the packlet.
PLL locked on prim/sec	

Copyright © 2007-2010 Nortel Networks. All Rights Reserved.

Table 17
System messages displayed on the system terminal of TTY (cont'd.)

	FXPEC successfully locked on the signal from the Electro-optical packlet identified by **prim** or **sec**.
PLL lock lost	PLL is in the process of trying to lock.
PWR messages	
PWRxxxx HW SM UEM U	
	Where **HW=PWSP** (power supply), **DCSP** (DC battery), **SM**=System monitor address (**1-63**) defined by the FXPEC MMI port. **UEM=0** for the main wall-mounted cabinet and **1** for the expansion wall-mounted cabinet. **U**=unit (not used).
XMI000 *loop message*	
	This is the general format of MMI messages printed on the system TTY. ***loop*** is the superloop number of the FXNET and ***message*** is the text sent by the card.
XMI000 *loop* OIF: switched to prim/sec	
	Indication is that the span switched to primary or secondary link.
XMI000 11 RSIG link lost - Reinitialized	
XMI000 11 R71 CRC Error threshold exceeded	
	Failure of R71 (RSIG) communication to the Fiber Peripheral Controller card.

Table 18
Fiber Peripheral Controller selftest HEX codes

HEX code	Test description
01	MPU confidence test
02	MPU internal RAM
03	Boot EPROM test
04	RAM test
05	MPU addressing mode test
06	ID EEPROM test
07	FLASH EPROM test (the programmable part)
08	Watchdog timer test
09	MPU timers test
0A	DUART port A
0B	DUART port B
0C	A31 #1 external buffer

Copyright © 2007-2010 Nortel Networks. All Rights Reserved.

Table 18
Fiber Peripheral Controller selftest HEX codes (cont'd.)

HEX code	Test description
0D	A31 #1 internal context memory (phase A)
0E	A31 #1 internal context memory (phase B)
0F	A31 #1 internal TXVM memory
10	A31 #1 configuration memory
11	A31 #1 external FIFO
12	A31 #2 external buffer
13	A31 #2 internal context memory (phase A)
14	A31 #2 internal context memory (phase B)
15	A31 #2 internal TXVM memory
16	A31 #2 configuration memory
17	A31 #2 external FIFO
18	R72 N-P switching control memory
19	R72 320x8 NIVD buffer
1A	R72 N-P Quiet code register
1B	R72 P-N switching control memory
1C	R72 640-8 XIVD buffer
1D	R72 640-8 XIVD loopback buffer test
1E	R72 P-N Quiet code register
1F	R71 register test
20	R71 continuity test, peripheral side
21	R71 continuity test, network side
22	R71 packet transmission test
23	Interrupt test
24	R71 continuity test, peripheral side DS30X

Table 19
Alphabetical list of MMI commands

Command	Description
`CLOG`	Clears the log file and deletes all the messages.
`CXSM`	For remote floor-standing column. Checks the communication between the Fiber Peripheral Controller and the system monitor in the pedestal. The output is: **Wait...** during the test and after the test it displays: **XSM** responding or **XSM not responding**.

Copyright © 2007-2010 Nortel Networks. All Rights Reserved.

Table 19
Alphabetical list of MMI commands (cont'd.)

Command	Description
EOIA on/of	Default is off. Monitors EOI laser controller and reports the result: #n= 0 (primary), #n=1 (secondary) EOI #n ALARMS: Transmitter Fail EOI #n ALARMS: Transmitter is OK EOI #n ALARMS: Laser Fail EOI #n ALARMS: Laser is OK EOI #n ALARMS: Transmitter Input Clock Loss EOI #n ALARMS: Transmitter Input Clock is OK EOI #n ALARMS: Laser Degrade EOI #n ALARMS: Laser Degrade is OK EOI #n ALARMS: Laser ShutDown EOI #n ALARMS: Laser ShutDown is OK EOI #n ALARMS: Receiver Fail, alarm= x EOI #n ALARMS: Receiver is OK EOI #n ALARMS: Receiver Optical Input Fail, alarm= x EOI #n ALARMS: Receiver Optical Input is OK EOI #n ALARMS: Low Optical Input Power, alrm= x EOI #n ALARMS: Low Optical Input Power is OK EOI #n ALARMS: High Optical Input Power, alrm= x EOI #n ALARMS: High Optical Input Power is OK
<ESC>L	Changes the MMI port to local or MMI mode. ESC must be the first character in the command and must be preceded with 1.5 seconds of no-input.
<ESC>R	Changes the MMI port to remote or SL-1 mode. ESC must be the first character in the command and must be preceded with 1.5 seconds of no input.
FORC PRI/SEC	Performs forced switch of the active span to PRI=primary or SEC=secondary packlet.
HELP	Displays the list of commands.
IDC M/P/S	Query card ID information where M=main board (default setup), P=primary packlet, and S=secondary packlet.

Copyright © 2007-2010 Nortel Networks. All Rights Reserved.

Table 19
Alphabetical list of MMI commands (cont'd.)

Command	Description
`MANS PRI/SEC`	Performs manual switch to the primary or secondary link in a redundant link configuration.
`MCLR`	Clears manual link switching and restores the automatic link backup.
`NLOG {n}`	Prints the next n messages from a log file starting with the message following the last printed. If n is omitted, one message is printed.Change the last message printed by executing `PLOG` command.
`PLOG {n}`	Prints **n** messages from the log file starting with the oldest message. If **n** is omitted, one record is printed. If **n** is larger than the file or if **n**=0, the entire file is printed.
`QDEF`	Query the default mode of the MMI port. The response can be: **Local** or **Remote**.
`QFIB`	Query the status of fiber-optic links. The response format is: **PRIM physical signal direction** **SEC physical signal direction** where **physical** can be: **equip**, **unequip**, or **faulty signal** can be: **SF** (failed), **SD** (degrade), or **NA** (no alarm) **direction** can be: **incoming**, **outgoing**, **both**, or **none**.
`QVER`	Query version of the firmware and loadware.The response is: **Boot: xx Main: yy PSDL: zz** where **xx**= version of the boot firmware in EPROM **yy**= version of the main program, which is the last real download or the factory issue **zz**= version defined by the `SVER` command.
`QXSM`	Query the system monitor port number that can be from 1 to 63.
`SCID M/P/S string`	Sets card ID of: **M**=main board, **P**=primary packlet, or **S**=secondary packlet. The string is programmed on an EEPROM. A maximum of 32 characters can be contained in the string. A password is required to execute the command. The response to the command can be: **OK** if the command execution is successful or **FAILED** if the execution failed.

Copyright © 2007-2010 Nortel Networks. All Rights Reserved.

Table 19
Alphabetical list of MMI commands (cont'd.)

Command	Description
`SDEF L/R`	Sets the default mode to **L**ocal (MMI mode) or **R**emote (SL-1 mode).This command does not affect the current working mode, but it does affect the default mode after the reset or power-up.
`STAD d m y h m s`	Sets time and date with **day, month, year, hour, minute**, and **second.**
`STAT`	Query card status. The response can be: **Enabled/Disabled PLL: lock/unlock prim/sec** Enabled/Disabled indicates the status of the card. If Enabled, the CPU enabled it; otherwise, the response is Disabled. **PLL: lock/unlock** indicates the status of the PLL on the card. If locked, it indicates whether it is locked on the **primary** or **secondary** link. At the Fiber Superloop Network card an additional response is printed: **n busy** shows the number of timeslots busy.
`SUBM string`	Submits a command to the other side of the span where **string** represents the actual command executed by the other side. The response, if any, is printed locally.
`SVER version`	Sets the PSDL version, which is presented to the CPU. The parameter **version** is a decimal number and it must match the actual version of the non-fiber superloop and peripheral controller card version. This command affects only the cards on which it is executed.
`SXSM n`	Defines the system monitoring address **n** for a wall-mounted cabinet Fiber Remote IPE. The address is also stored in the Fiber Peripheral Controller card EEPROM. The command is in effect immediately.
`TEST {P/S}`	Tests the entire card if **P/S** is omitted, tests only the primary packlet if **P** is specified, or tests only the secondary packlet if **S** is specified. To test the entire card, first disable the card. To test the packlet the card can be active but the packlet being tested must be idle. Test results are printed on the MMI terminal. If any of the tests fail, refer to Table 18 "Fiber Peripheral Controller selftest HEX codes" (page 135) for explanation.
`TTAD`	Query time and date.

Copyright © 2007-2010 Nortel Networks. All Rights Reserved.

Copyright © 2007-2010 Nortel Networks. All Rights Reserved.

Nortel Communication Server 1000

Fiber Remote IPE Fundamentals

Release: 7.0
Publication: NN43021-554
Document revision: 04.01
Document release date: 4 June 2010

Copyright © 2007-2010 Nortel Networks. All Rights Reserved.

While the information in this document is believed to be accurate and reliable, except as otherwise expressly agreed to in writing NORTEL PROVIDES THIS DOCUMENT "AS IS" WITHOUT WARRANTY OR CONDITION OF ANY KIND, EITHER EXPRESS OR IMPLIED. The information and/or products described in this document are subject to change without notice.

Nortel, Nortel Networks, the Nortel logo, and the Globemark are trademarks of Nortel Networks.

All other trademarks are the property of their respective owners.

To provide feedback or to report a problem in this document, go to www.nortel.com/documentfeedback.

www.nortel.com