Call Detail Recording Fundamentals
Avaya Communication Server 1000

7.5
NN43001-550, 05.03
September 2011

© 2011 Avaya Inc.

All Rights Reserved.

Notice

While reasonable efforts have been made to ensure that the information in this document is complete and accurate at the time of printing, Avaya assumes no liability for any errors. Avaya reserves the right to make changes and corrections to the information in this document without the obligation to notify any person or organization of such changes.

Documentation disclaimer

“Documentation” means information published by Avaya in varying mediums which may include product information, operating instructions and performance specifications that Avaya generally makes available to users of its products. Documentation does not include marketing materials. Avaya shall not be responsible for any modifications, additions, or deletions to the original published version of documentation unless such modifications, additions, or deletions were performed by Avaya. End User agrees to indemnify and hold harmless Avaya, Avaya's agents, servants and employees against all claims, lawsuits, demands and judgments arising out of, or in connection with, subsequent modifications, additions or deletions to this documentation, to the extent made by End User.

Link disclaimer

Avaya is not responsible for the contents or reliability of any linked Web sites referenced within this site or documentation provided by Avaya. Avaya is not responsible for the accuracy of any information, statement or content provided on these sites and does not necessarily endorse the products, services, or information described or offered within them. Avaya does not guarantee that these links will work all the time and has no control over the availability of the linked pages.

Warranty

Avaya provides a limited warranty on its Hardware and Software (“Product(s)”). Refer to your sales agreement to establish the terms of the limited warranty. In addition, Avaya’s standard warranty language, as well as information regarding support for this Product while under warranty is available to Avaya customers and other parties through the Avaya Support Web site: http://support.avaya.com. Please note that if you acquired the Product(s) from an authorized Avaya reseller outside of the United States and Canada, the warranty is provided to you by said Avaya reseller and not by Avaya.

Licenses

THE SOFTWARE LICENSE TERMS AVAILABLE ON THE AVAYA WEBSITE, HTTP://SUPPORT.AVAYA.COM/LICENSEINFO/ ARE APPLICABLE TO ANYONE WHO DOWNLOADS, USES AND/OR INSTALLS AVAYA SOFTWARE, PURCHASED FROM AVAYA INC., ANY AVAYA AFFILIATE, OR AN AUTHORIZED AVAYA RESELLER (AS APPLICABLE) UNDER A COMMERCIAL AGREEMENT WITH AVAYA OR AN AUTHORIZED AVAYA RESELLER. UNLESS OTHERWISE AGREED TO BY AVAYA IN WRITING, AVAYA DOES NOT EXTEND THIS LICENSE IF THE SOFTWARE WAS OBTAINED FROM ANYONE OTHER THAN AVAYA, AN AVAYA AFFILIATE OR AN AVAYA AUTHORIZED RESELLER; AVAYA RESERVES THE RIGHT TO TAKE LEGAL ACTION AGAINST YOU AND ANYONE ELSE USING OR SELLING THE SOFTWARE WITHOUT A LICENSE. BY INSTALLING, DOWNLOADING OR USING THE SOFTWARE, OR AUTHORIZING OTHERS TO DO SO, YOU, ON BEHALF OF YOURSELF AND THE ENTITY FOR WHOM YOU ARE INSTALLING, DOWNLOADING OR USING THE SOFTWARE (HEREINAFTER REFERRED TO INTERCHANGEABLY AS “YOU” AND “END USER”), AGREE TO THESE TERMS AND CONDITIONS AND CREATE A BINDING CONTRACT BETWEEN YOU AND AVAYA INC. OR THE APPLICABLE AVAYA AFFILIATE (“AVAYA”).

Copyright

Except where expressly stated otherwise, no use should be made of materials on this site, the Documentation, Software, or Hardware provided by Avaya. All content on this site, the documentation and the Product provided by Avaya including the selection, arrangement and design of the content is owned either by Avaya or its licensors and is protected by copyright and other intellectual property laws including the sui generis rights relating to the protection of databases. You may not modify, copy, reproduce, republish, upload, post, transmit or distribute in any way any content, in whole or in part, including any code and software unless expressly authorized by Avaya. Unauthorized reproduction, transmission, dissemination, storage, and or use without the express written consent of Avaya can be a criminal, as well as a civil offense under the applicable law.

Third-party components

Certain software programs or portions thereof included in the Product may contain software distributed under third party agreements (“Third Party Components”), which may contain terms that expand or limit rights to use certain portions of the Product (“Third Party Terms”). Information regarding distributed Linux OS source code (for those Products that have distributed the Linux OS source code), and identifying the copyright holders of the Third Party Components and the Third Party Terms that apply to them is available on the Avaya Support Web site: http://support.avaya.com/Copyright.

Preventing Toll Fraud

“Toll fraud” is the unauthorized use of your telecommunications system by an unauthorized party (for example, a person who is not a corporate employee, agent, subcontractor, or is not working on your company's behalf). Be aware that there can be a risk of Toll Fraud associated with your system and that, if Toll Fraud occurs, it can result in substantial additional charges for your telecommunications services.

Avaya Toll Fraud Intervention

If you suspect that you are being victimized by Toll Fraud and you need technical assistance or support, call Technical Service Center Toll Fraud Intervention Hotline at +1-800-643-2353 for the United States and Canada. For additional support telephone numbers, see the Avaya Support Web site: http://support.avaya.com. Suspected security vulnerabilities with Avaya products should be reported to Avaya by sending mail to: securityalerts@avaya.com.

Trademarks

The trademarks, logos and service marks (“Marks”) displayed in this site, the Documentation and Product(s) provided by Avaya are the registered or unregistered Marks of Avaya, its affiliates, or other third parties. Users are not permitted to use such Marks without prior written consent from Avaya or such third party which may own the Mark. Nothing contained in this site, the Documentation and Product(s) should be construed as granting, by implication, estoppel, or otherwise, any license or right in and to the Marks without the express written permission of Avaya or the applicable third party.

Avaya is a registered trademark of Avaya Inc.

All non-Avaya trademarks are the property of their respective owners, and “Linux” is a registered trademark of Linus Torvalds.

Downloading Documentation

For the most current versions of Documentation, see the Avaya Support Web site: http://support.avaya.com.

Contact Avaya Support

Avaya provides a telephone number for you to use to report problems or to ask questions about your Product. The support telephone number is 1-800-242-2121 in the United States. For additional support telephone numbers, see the Avaya Web site: http://support.avaya.com.

Contents

Chapter 1: New in this release 9
- Features 9
  - CDR BLID enhancement 9
- Other changes 9
  - Revision history 9

Chapter 2: Customer service 11
- Navigation 11
- Getting technical documentation 11
- Getting product training 11
- Getting help from a distributor or reseller 11
- Getting technical support from the Avaya Web site 12

Chapter 3: Introduction 13
- Contents 13
- Product overview 13
- Packaging 13
- About this document 15
  - Subject 15
  - Note on legacy products and releases 15
  - Applicable systems 15
  - System migration 16
  - Intended audience 16
  - Terminology 16
  - Related information 16
  - Technical documentation 17
  - Online 17

Chapter 4: CDR features 19
- Contents 19
- Introduction 20
- CDR Enhancement when Dialing from Non-prime Key 22
- Attendant CDR Enhancement 23
- Authorization Code 23
  - Feature implementation 23
- Automatic Call Distribution (ACD) CDR Queue (connection) records 23
  - Feature implementation 24
- Bearer Capability in Call Detail Recording 24
  - Bearer Capability in Call Detail Recording for ISDN 25
  - Bearer Capability in Call Detail Recording for DASS/DPNSS 26
  - Bearer Capability in Call Detail Recording for DTI/DTI2 28
  - Bearer Capability in CDR 28
- CDR BLID enhancement 31
  - Feature operation 31
- Call Types 32
  - Feature implementation 32
- Calling Line Identification in CDR 33

Feature implementation ... 33
Feature interaction ... 33
Calling Party Number ... 34
Feature implementation ... 35
CDR Answer Supervision ... 36
Class of Service ... 36
Feature implementation ... 38
CDR 100 Hour Call ... 39
Feature implementation ... 39
Call Detail Recording Enhancement ... 39
Operating parameters ... 40
Feature interactions ... 40
Feature packaging ... 49
Feature implementation ... 50
Feature operation ... 51
CDR Expansion ... 51
CDR on Busy Tone ... 52
Incoming calls and the Route Data Block Last prompt ... 52
Operating parameters ... 56
Feature interactions ... 57
Feature packaging ... 60
Feature implementation ... 60
Feature operation ... 63
Internal Call Detail Recording ... 63
Feature implementation ... 63
CDR on Redirected Incoming Calls ... 65
Feature implementation ... 65
CDR on TTY ... 66
Feature implementation ... 66
CDR with Charge Account ... 67
Feature implementation ... 67
CDR with Outpulsed Digits ... 68
Feature implementation ... 69
Coordinated Dialing Plan with CDR Enhancement ... 70
Feature implementation ... 70
Dialed Number Identification Service (DNIS) ... 71
Feature packaging ... 71
Feature implementation ... 72
End-to-End Signaling (EES) ... 72
Feature implementation ... 73
Enhanced Malicious Call Trace ... 73
Feature implementation ... 75
Feature Group D (FGD) Automatic Number Identification ... 75
Feature implementation ... 76
Flexible CDR Digit Suppression ... 76
Feature implementation ... 76
Format CDR ... 77

Feature implementation ... 78
In-Band Automatic Number Identification ... 78
Feature implementation ... 78
Japan Central Office Trunks ... 79
Half Second duration accuracy ... 79
Feature implementation ... 79
M911 Enhancements: Call Abandon and MADN Display Coordination ... 79
Feature implementation ... 80
Time to Answer ... 81
Limitations ... 81
Feature implementation ... 81
Meridian 1 Packet Handler (MPH) ... 84
Implementation ... 85
Message Registration ... 86
Periodic Pulse Metering ... 86
Advice of Charge ... 86
Metered Transferred Call ... 86
Feature implementation ... 87
Multi-Customer Operation ... 89
Feature implementation ... 90
Multi-Frequency Compelled signaling ... 90
Feature implementation ... 90
Multi-Tenant Service ... 91
Feature implementation ... 91
Multiple Appearance Directory Numbers ... 92
Feature implementation ... 93
Network Metering CDR Enhancement ... 93
Feature implementation ... 94
NPI and TON in CDR ... 94
Operating parameters ... 101
Feature interactions ... 102
Feature packaging ... 102
Feature implementation ... 102
Feature operation ... 103
Priority to CDR ... 103
Feature implementation ... 103
Public Network Feature Invocation records ... 103
Feature implementation ... 104
Public Service Telephone Network (PSTN) Three Party Conferencing ... 104
R2MFC CNI/CDR Enhancements ... 105
Examples of CDR formats ... 105
Operating parameters ... 105
Feature interactions ... 106
Feature packaging ... 107
Feature implementation ... 108
Feature operation ... 124
Scheduled Access Restriction ... 124

Feature implementation ... 124
Stand-alone and network outgoing non-metered CDR Transfer Enhancement (CDRX) ... 124
Feature implementation ... 125
Station activity Call Detail Recording ... 126
Feature implementation ... 126
Terminating Carriage Control ... 127
Feature implementation ... 128
Chapter 5: Administration ... 129
Contents ... 129
Introduction ... 129
Feature implementation ... 129
Task summary list ... 129
Establishing baud rates ... 140
Chapter 6: Call record fields ... 143
Contents ... 143
Introduction ... 143
TTY record fields ... 145
RECTYPE: Record Type ... 145
RECNO: Record Number ... 146
CUSTNO: Customer Number ... 146
ORIGID: Originator Identification ... 147
TERID: Terminator Identification ... 148
AUXID: Auxiliary Identification ... 149
TERMAUXID: Terminating Auxiliary Identification ... 149
TIMESTAMP: Time stamp ... 149
DURATION: Call Duration ... 151
DIGITYPE: Digit Type Identifier ... 152
DIGITS: Digits ... 153
ORIGTENO and TERTENO: Originating/Terminating Tenant Number ... 156
CHGINFO: Charge Information ... 156
CALLCHG: Call Charge ... 157
CLID: Calling Line Identification ... 157
IANI: In-Band Automatic Number Identification ... 158
FGDANI: Feature Group D Automatic Number Identification ... 158
DNIS: Dialed Number Identification Service ... 159
TTA: Time to Answer (TTY only) ... 159
INPACK: Incoming packet count ... 160
OUTPACK: Outgoing packet count ... 161
BLID: Billing Line Identification (TTY only) ... 161
Terminating Carriage Control (TTY only) ... 161
Ampersand (TTY only) ... 161
M911: M911 Call Abandon ... 162
000: CDR 100 Hour Call ... 162
B: Busy Tone Identifier ... 163
Session Initiation Protocol (SIP) Trunk Call ... 163
CDR TTY ... 164
CDR Output for Incoming CD Call ... 164

Chapter 7: Teletype call record output 169
Contents 169
Introduction 169
Record output and storage 169
More about TTY output 170
Reversed Wired CO trunk 170
Old and New Format CDR 170
Chapter 8: Call record types 183
Contents 183
Introduction 184
B record (Abandoned call) 185
N (Normal) record 185
Feature interactions/Call scenarios 186
S (Start) record 188
Feature interactions/Call scenarios 188
X record (Transfer) 191
Feature interactions/Call scenarios 191
E record (End) 192
Feature interactions/Call scenarios 192
I record (Initialization) 192
T record (Time stamp) 193
A record (Authorization Code/Scheduled Access Restriction) 193
Feature interactions/Call scenarios 193
C record (Charge Account) 194
Feature interactions/Call scenarios 194
M record (Charge Conference) 195
Different account numbers 196
Feature interactions/Call scenarios 196
P record (Calling Party Number) 196
F, R, and Q records (ACD call connections) 196
R records and F records 197
L record (Internal CDR) 198
Feature packaging 198
Feature interactions/Call scenarios 198
G record (Internal Meridian 1 Packet Handler data call) 200
H record (External Meridian 1 Packet Handler data call) 200
D record (Station Activity) 200
Feature packaging 201
Feature interactions/Call scenarios 201
Y record (Public Network Feature Invocation) 202
Feature interactions/Call scenarios 202
Priority Connection Record 205
CDR record sequencing 206
Call sequence for an incoming-trunk-to-agent call 206
Chapter 9: Examples of call records 209
Contents 209
Introduction 210

Authorization Code ... 211
Authorization Code and Call Transfer ... 212
Charge Account with AUXID ... 213
Calling Party Number ... 214
Charge Conference Example 1 ... 214
Charge Conference Example 2 ... 216
Charge Conference Example 3 ... 217
Call Transfer and Charge Account features ... 219
Metered Transferred Call ... 221
Multi-Tenant ... 223
Calling Line Identification (CLID) ... 224
Calling Line Identification (CLID) on a tandem call ... 225
CDR with Outpulsed Digits ... 226
In-Band Automatic Number Identification ... 228
Feature Group D Automatic Number Identification ... 229
Abandoned Call ... 229
911 Abandoned Call ... 230
Call Transfer, Charge Account, and Time to Answer features ... 231
Metered Transferred Call and Time to Answer ... 232
Attendant CDR Enhancement for outgoing non-metered CO trunks ... 233
CDR Call Transfer Enhancement ... 234
Simple guarded transfer ... 235
CDR Call Transfer Enhancement with network calls ... 238
Simple network call ... 238
Station Activity Record ... 244
Public Network Feature Invocation Record ... 245
CDR 100 Hour Call ... 246
Index ... 249

Chapter 1: New in this release

The following sections detail what is new in *Call Detail Recording Fundamentals, NN43001-550* for Avaya Communication Server 1000 (Avaya CS 1000) Release 7.5.

Features

See the following sections for information about feature changes:

CDR BLID enhancement on page 9

CDR BLID enhancement

With Call Detail Recording Billing Line Identification (CDR BLID) enhancement feature, the initiator's number appears in the BLID field in the third line of the end record, even if the initiator disconnects the call. For more information, see CDR BLID enhancement on page 31.

Other changes

There are no other changes for this release.

Revision history

September 2011	Standard 05.03. This document is up-issued for changes in technical content. References to the Portable Mobile Identification Number are removed.
February 2011	Standard 05.02. This document is up-issued to remove legacy feature and hardware content that is no longer applicable to or supported by Communication Server 1000 systems.
November 2010	Standard 05.01. This document is up-issued to support Avaya Communication Server 1000 Release 7.5.

September 2011	Standard 04.02. This document is up-issued for changes in technical content. References to the Portable Mobile Identification Number are removed.
June 2010	Standard 04.01. This document is up-issued to support Avaya Communication Server 1000 Release 7.0.
May 2009	Standard 03.01. This document is up-issued to support Communication Server 1000 Release 6.0.
October 2008	Standard 02.04. This document is up-issued to include the content in the chapter CDR features.
September 2008	Standard 02.03. This document is up-issued to show up CDR enhancement prompts in Call Detail Recording.
January 2008	Standard 02.02. This document is up-issued to include corrections for configuring a calling party number key on a Meridian 1 proprietary phone.
December 2007	Standard 02.01. This document is issued to support Communication Server 1000 Release 5.5.
May 2007	Standard 01.02. This document is up-issued to support changes in Communication Server 1000 Release 5.0
May 2007	Standard 01.01. This document is issued to support Communication Server 1000 Release 5.0. This document is renamed Call Detail Recording Fundamentals and contains information previously contained in the following legacy document, now retired: *Call Detail Recording: Description and Formats, 553-3001-350*. No new content has been added for Communication Server 1000 Release 5.0. All references to Communication Server 1000 Release 4.5 are applicable to Communication Server 1000 Release 5.0.

Chapter 2: Customer service

Visit the Avaya Web site to access the complete range of services and support that Avaya provides. Go to www.avaya.com or go to one of the pages listed in the following sections.

Navigation

- Getting technical documentation on page 11
- Getting product training on page 11
- Getting help from a distributor or reseller on page 11
- Getting technical support from the Avaya Web site on page 12

Getting technical documentation

To download and print selected technical publications and release notes directly from the Internet, go to www.avaya.com/support.

Getting product training

Ongoing product training is available. For more information or to register, go to www.avaya.com/support. From this Web site, locate the Training link on the left-hand navigation pane.

Getting help from a distributor or reseller

If you purchased a service contract for your Avaya product from a distributor or authorized reseller, contact the technical support staff for that distributor or reseller for assistance.

Getting technical support from the Avaya Web site

The easiest and most effective way to get technical support for Avaya products is from the Avaya Technical Support Web site at www.avaya.com/support.

Chapter 3: Introduction

Contents

This section contains information on the following topics:

Product overview on page 13

Packaging on page 13

About this document on page 15

Product overview

The Call Detail Recording (CDR) feature provides information on incoming and outgoing calls for accounting and administration purposes. The information is assembled by software and sent through Serial Data Interface (SDI) ports to any EIA RS-232 compatible output or storage device. Teletypewriters (TTY) and printers are examples of output devices.

Packaging

Table 1: CDR software packages on page 13 lists packages that affect information output in CDR. Consult your Avaya representative for information regarding your specific system requirements.

Table 1: CDR software packages

Feature Name	Package Mnemonic	Package Number
Call Detail Recording (CDR) Base	CDR	4
Multi-Customer	CUST	2
CDR on Teletype	CTY	5
End-To-End Signaling	EES	10

Feature Name	Package Mnemonic	Package Number
Automatic Number Identification	ANI	12
Charge Account	CHG	23
Charge Account/Authorization code Base	CAB	24
Basic Authorization code	BAUT	25
Network Automatic Route Selection	NARS	58
Coordinated Dialing Plan	CDP	59
Network Authorization code	NAUT	63
Automatic Call Distribution CDR queue records	CDRQ	83
Multi-Tenant Service	TENS	86
Japan Central office Trunks	JPN	97
Dialed Number Identification System	DNIS	98
Message Registration	MR	101
Internal CDR	ICDR	108
Calling Line Identification in CDR	CCDR	118
Multi-Frequency Compelled signaling	MFC	128
International Supplementary Features	SUPP	131
CDR Expansion	CDRE	151
Feature Group D	FGD	158
Scheduled Access Restriction	SAR	162
Meridian 911	M911	224
Format CDR	FCDR	234
Meridian 1 Packet Handler	MPH	248
Station activity Call Detail Recording	SCDR	251
Call Detail Recording Enhancement	CDRX	259
NI2	NI2	291
CDR on Busy Tone	FCDR	234

About this document

This document is a global document. Contact your system supplier or your Avaya representative to verify that the hardware and software described are supported in your area.

Subject

This document provides the following information on Call Detail Recording (CDR):

- an overview of CDR features
- administration options
- record type descriptions
- record field descriptions
- record output formats
- record output examples

Note on legacy products and releases

This document contains information about systems, components, and features that are compatible with Avaya Communication Server 1000 software. For more information about legacy products and releases, click **Documentation**, under **Support** on the Avaya home page:

www.avaya.com

Applicable systems

This document applies to the following systems:

- Avaya Communication Server 1000E (Avaya CS 1000E)
- Avaya Communication Server 1000M Single Group (Avaya 1000M SG)
- Avaya Communication Server 1000M Multi Group (Avaya 1000M MG)

System migration

When particular Meridian 1 systems are upgraded to run CS 1000 software and configured to include a Signaling Server, they become CS 1000 systems. The following table lists each Meridian 1 system that supports an upgrade path to a CS 1000 system.

Table 2: Meridian 1 systems to CS 1000 systems

This Meridian 1 system	Maps to this CS 1000M system
Meridian 1 PBX 11C Chassis	CS 1000E
Meridian 1 PBX 11C Cabinet	CS 1000E
Meridian 1 PBX 61C	CS 1000M Single Group
Meridian 1 PBX 81C	CS 1000M Multi Group

For more information, see one or more of the following technical documents:

- *Avaya Communication Server 1000M and Meridian 1 Large System Upgrade Procedures, NN43021-458*
- *Avaya Communication Server 1000E Upgrade Procedures, NN43041-458*

Intended audience

This document is intended for individuals responsible for CDR administration.

Terminology

In this document, the following systems are referred to generically as system:

- Avaya Communication Server 1000E (Avaya CS 1000E)
- Avaya Communication Server 1000M (Avaya CS 1000M)
- Meridian 1

Related information

This section lists information sources that relate to this document.

Technical documentation

The following technical documents are referenced in this document:

- *Dialing Plans Reference, NN43001-283*
- *Circuit Card Reference, NN43001-311*
- *IP Peer Networking Installation and Commissioning, NN43001-313*
- *Features and Services Fundamentals, NN43001-106*
- *Software Input Output Administration, NN43001-611*
- *Automatic Call Distribution Fundamentals, NN43001-551*
- *ISDN Primary Rate Interface Features Fundamentals, NN43001-569*
- *Traffic Measurements Formats and Output Reference, NN43001-750*
- *Communication Server 1000M and Meridian 1 Large System Planning and Engineering, NN43021-220*

Online

To access Avaya documentation online, click the **Documentation** link under **Support** on the Avaya home page:

www.avaya.com

Chapter 4: CDR features

Contents

This section contains information on the following topics:

Introduction on page 20

Attendant CDR Enhancement on page 23

Authorization Code on page 23

Automatic Call Distribution (ACD) CDR Queue (connection) records on page 23

Bearer Capability in Call Detail Recording on page 24

Call Types on page 32

Calling Line Identification in CDR on page 33

Calling Party Number on page 34

CDR Answer Supervision on page 36

CDR 100 Hour Call on page 39

Call Detail Recording Enhancement on page 39

CDR Expansion on page 51

CDR on Busy Tone on page 52

Internal Call Detail Recording on page 63

CDR on Redirected Incoming Calls on page 65

CDR on TTY on page 66

CDR with Charge Account on page 67

CDR with Outpulsed Digits on page 68

Coordinated Dialing Plan with CDR Enhancement on page 70

Dialed Number Identification Service (DNIS) on page 71

End-to-End Signaling (EES) on page 72

Enhanced Malicious Call Trace on page 73

Feature Group D (FGD) Automatic Number Identification on page 75

Flexible CDR Digit Suppression on page 76

Format CDR on page 77

In-Band Automatic Number Identification on page 78

Japan Central Office Trunks on page 79

M911 Enhancements: Call Abandon and MADN Display Coordination on page 79

Time to Answer on page 81

Meridian 1 Packet Handler (MPH) on page 84

Message Registration on page 86

Multi-Customer Operation on page 89

Multi-Frequency Compelled signaling on page 90

Multiple Appearance Directory Numbers on page 92

Multiple Appearance Directory Numbers on page 92

Network Metering CDR Enhancement on page 93

Task summary list on page 63

Priority to CDR on page 103

Public Network Feature Invocation records on page 103

Public Service Telephone Network (PSTN) Three Party Conferencing on page 104

R2MFC CNI/CDR Enhancements on page 105

Scheduled Access Restriction on page 124

Stand-alone and network outgoing non-metered CDR Transfer Enhancement (CDRX) on page 124

Station activity Call Detail Recording on page 126

Terminating Carriage Control on page 127

Introduction

This chapter contains brief descriptions of base CDR package features as well as optional CDR features. Some features require the Format CDR (FCDR) package 234. Table 3: CDR

features list that shows which features require FCDR package 234. on page 21 lists the CDR features and shows whether FCDR package is required.

Table 3: CDR features list that shows which features require FCDR package 234.

Features	FCDR required?
Priority to CDR	No
Call types	No
Multiple Appearance Directory Numbers (MADNs)	No
Calling Party Number	No
Call Detail Recording Enhancement	Yes
CDR Answer Supervision	No
Flexible CDR Digit Suppression	No
Terminating Carriage Control	No
Multi-Customer operation	No
Multi-Tenant Service	No
In-Band Automatic Number Identification	No
CDR with Outpulsed Digits	No
Coordinated Dialing Plan with CDR Enhancement	No
CDR with Charge Account	No
Authorization Code	No
Japan Central Office Trunks	No
Dialed Number Information Service on CDR	No
Message Registration	No
Multi-Frequency Compelled signaling	No
Scheduled Access Restriction	No
End-to-end signaling	No
Attendant CDR Enhancement (Release 20 & later)	Yes
Network Metering CDR Enhancement (Release 20 & later)	Yes
Format CDR	Yes
Enhanced Malicious Call Trace	No
CDR on Teletype	No
Automatic Call Distribution CDR Queue records	No
Internal Call Detail Recording	No

Features	FCDR required?
Calling Line Identification in CDR	No
CDR Expansion	No
Feature Group D Automatic Number Identification	No
Standalone and network outgoing non-metered CDR Transfer Enhancement (CDRX)	Yes
Time to Answer	Yes
CDR on Redirected Incoming Calls	No
Public Network Feature Invocation records	No
Public Service Telephone Network (PSTN) Three Party Conferencing on page 104	No
Meridian 1 Packet Handler	No
Standalone and network outgoing non-metered CDR Transfer Enhancement	No
Station activity Call Detail Recording	No
CDR 100 Hour Call	Yes
CDR on Busy Tone	Yes
R2MFC CNI/CDR Enhancements	Yes
NPI and TON in CDR Tickets	Yes
Bearer Capability in CDR	Yes

CDR Enhancement when Dialing from Non-prime Key

Dialing from non prime key: When an external call is set up from a digital set with multiple DNs programmed using any key other than the Prime DN key, the Meridian 1 outputs a CDR N-record at the end of the call. The ORIG-ID field of the N-record holds the value of the Prime Key DN.

A new class-of-service (CLS) is provided for digital sets. When the CLS is OKCH then the ORIG-ID field of the N-record will contain the actual originating DN.

When the CLS is PKCH then the ORIG-ID field of the N-record will contain the Prime DN. PKCH is the default setting.

Attendant CDR Enhancement

Trunk calls originated by the attendant and extended to an internal station produce S (Start) records when the attendant releases the call. The S records indicate the attendant as the originating party and the outgoing trunk as the terminating party. The duration of the call is recorded as the time the attendant spent on the call until the Release key was pressed.

When either the internal station or the far end disconnects, an E (End) record is generated. The E record is generated against the internal station. The duration of the call is recorded from the moment the attendant pressed the Release key until the call is disconnected.

Authorization Code

When the Authorization Code is used and ACDR is set to YES in LD 88, the Authorization Code feature generates A (Authorization Code/Scheduled Access Restriction) records.

Feature implementation

Table 4: LD 88 - Configure Authorization Codes to print in CDR.

Prompt	Response	Description
REQ	CHG	Change existing data block.
TYPE	AUB	Authcode
	RAUB	Room Authcode
CUST	xx	Customer number as defined in LD 15.
...		
ACDR	(NO) YES	Authorization codes in CDR

Automatic Call Distribution (ACD) CDR Queue (connection) records

The Integrated ACD/CDR Call Processing Interface feature uses connection records. Connection records tell the customer-provided computer, in real-time, which Automatic Call

Distribution (ACD) agent is connected to which trunk. ACD/CDR Queue (CDRQ) package 83 is required.

Connection records are generated on incoming calls when a connection is established between an agent and a trunk and on each conference and transfer connection. This feature is implemented using a CDR-TTY (CTY) port which provides a data link to the customer-provided computer.

Feature implementation

Table 5: LD 16 - Configure the trunk route for ACD CDR Queue connection records.

Prompt	Response	Description
REQ	CHG	Change existing data block.
TYPE	RDB	Route Data Block
CUST	xx	Customer number as defined in LD 15.
ROUT		Route number
	0-511	Range for Large System, Call Server 1000E, and Media Gateway 1000E
DES	x...x	Designator field for trunk (0-16 alphanumeric characters)
TKTP	a...a	Trunk Type
...		
CDR	(NO) YES	Call Detail Recording
- QREC	(NO) YES	Q Records

Bearer Capability in Call Detail Recording

The Bearer Capability in Call Detail Recording feature allows the operator to use bearer capability information to apply different rates based on the type of trunks.

ISDN calls provide information on the bearer capabilities used for each trunk call. Bearer capability information also provides trunk characteristics for each call, such as rate, voice or data dedicated, and packet or circuit mode transfer.

The Bearer Capability in CDR feature applies for CDR involving trunks only. For non-trunk calls, such as phone-to-phone calls, blank characters are output. For all trunks not listed below, "99" is output in the CDR.

Comments? infodev@avaya.com

The Bearer Capability in CDR feature supports the following trunks:

- EuroISDN trunks
- Asia Pacific trunks
- MCDN trunks
- QSIG trunks
- DTI and DTI2 trunks
- DASS2 trunks and DPNSS1 trunks
- North American ISDN trunks

Table 6: Bearer capability information printed in the CDR record on page 25 shows the bearer capability codes printed in the CDR record and the meaning of each code.

Table 6: Bearer capability information printed in the CDR record

Code	Meaning
01	Circuit mode speech
02	Circuit mode 3.1 kHz
03	Circuit mode unrestricted 64 kbit/s digital information transfer
04	Circuit mode unrestricted 64 kbit/s digital information transfer rate adapted from 56 kbit/s
05	Packet mode unrestricted digital information transfer
06	Circuit mode 7 kHz audio or video telephony
07	Circuit mode restricted 64 kbit/s digital information transfer
08	Circuit mode video
99	Unknown or nonexistent

Bearer Capability in Call Detail Recording for ISDN

For ISDN protocols, the bearer capability is contained in the BCAP Information Element (IE). The IE is a mandatory field of the SETUP message sent to initiate a call. Table 7: Correspondence between the ISDN BCAP Information Element and the CDR code on page 26 shows the correspondence between the ISDN BCAP IE and the code for CDR. When the received BCAP fields do not match the values shown in Table 7: Correspondence between the ISDN BCAP Information Element and the CDR code on page 26, "99" is output.

Table 7: Correspondence between the ISDN BCAP Information Element and the CDR code

Code	Byte 3 bits 4-0 information transfer capability	Byte 4 bits 6-5 transfer mode	Byte 5 bits 4-0 user information layer 1 protocol	Meaning of CDR code
01	00000	00	/	Circuit mode speech
02	10000	00	/	Circuit mode 3.1 kHz audio
03	01000	00	/	Circuit mode unrestricted 64 kbit/s digital information transfer
04	01000	00	00001 or 01000	Circuit mode unrestricted 64 kbit/s digital information transfer rate adapted from 56 kbit/s **Note:** See byte 5, bits 4-0, user rate must be 01111 (56 kbit/s).
05	01000	01	/	Packet mode unrestricted digital information transfer
06	10001	00	/	Circuit mode 7 kHz audio or video telephony
07	01001	00	/	Circuit mode restricted 64 kbit/s digital information transfer
08	11000	00	/	Circuit mode video

Bearer Capability in Call Detail Recording for DASS/DPNSS

For DPNSS and DASS2 protocols, the bearer capability is contained in the Service Indicator Code (SIC). The SIC is a mandatory field of the Initial Service Request Message (ISRM) sent to initiate a call. It contains at least one byte and a maximum of two bytes. Table 8: Correspondence between the DPNSS Service Indicator Code and the CDR code on page 27 shows the correspondence between the DPNSS SIC and the CDR code. Table 9: Correspondence between the DASS2 Service Indicator Code and the CDR code on page 27 shows the correspondence between the DASS SIC and the CDR code. When the received

SIC fields do not match the values shown in Tables Table 8: Correspondence between the DPNSS Service Indicator Code and the CDR code on page 27 and Table 9: Correspondence between the DASS2 Service Indicator Code and the CDR code on page 27, "99" is output.

Table 8: Correspondence between the DPNSS Service Indicator Code and the CDR code

Code	Byte 1 bits 6-4	Byte 1 bits 3-0	Byte 2 bits 2-0	Byte 2 bits 6-4	Meaning of CDR code
01	001	/	/	/	Circuit mode speech
02	Not supported				Circuit mode 3.1 kHz audio
03	010	0000	/	/	Circuit mode unrestricted 64 kbit/s digital information transfer
04	Not supported				Circuit mode unrestricted 64 kbit/s digital information transfer rate adapted from 56 kbit/s
05	010 or 011	/	100	x1x	Packet mode unrestricted digital information transfer
06	Not supported				Circuit mode 7 kHz audio or video telephony
07	Not supported				Circuit mode restricted 64 kbit/s digital information transfer
08	Not supported				Circuit mode video

Table 9: Correspondence between the DASS2 Service Indicator Code and the CDR code

Code	Byte 1 bits 6-4	Byte 1 bits 3-0	Byte 2 bits 2-0	Byte 2 bits 6-4	Meaning of CDR code
01	000	/	/	/	Circuit mode speech
	001	0000 or 0010	/	/	
02	001	>=1000 not 1111	/	/	Circuit mode 3.1 kHz audio
03	010	0000 if 2 bytes	/	/	Circuit mode unrestricted 64 kbit/s

Code	Byte 1 bits 6-4	Byte 1 bits 3-0	Byte 2 bits 2-0	Byte 2 bits 6-4	Meaning of CDR code
					digital information transfer
04	Not supported				Circuit mode unrestricted 64 kbit/s digital information transfer rate adapted from 56 kbit/s
05	010 or 011	/	100	xlx	Packet mode unrestricted digital information transfer
06	Not supported				Circuit mode 7 kHz audio or video telephony
07					Circuit mode restricted 64 kbit/s digital information transfer
08					Circuit mode video

Bearer Capability in Call Detail Recording for DTI/DTI2

For DTI and DTI2 trunks, the bearer capability is set during the call processing in LD 16 according to the value entered at the DSEL prompt in the Route Data Block.

For both DTI and DTI2 trunks:

- For a voice call, 01 is output in the CDR.
- For a data call, 03 is output in the CDR.

Additionally, for DTI2 trunks, if the call is voice and data, 99 is output.

Bearer Capability in CDR

The CDR format is composed of three lines. Each printed item is assigned a line number and a location on that line. If features are restricted or not equipped, the corresponding field in the CDR record is filled with spaces. The first line is 87 characters long; the second line is 86 characters long.

The bearer capability information is at the end of the third line. The bearer capability information is located at position 49-50.

Table 10: Third line of the new CDR format on page 29 shows the format of the third line of CDR records. The BCAP field is in bold.

The BCAP field is filled with blank characters if:

- the calls involve phones only, or
- the BCAP prompt is set to NO (In LD 15, Type = CDR; CDR = YES; BCAP = NO.)

The bearer capability information is present in all CDR records involving trunks.

Table 10: Third line of the new CDR format

Position	Content	Description
1	blank	
2	&	Third line of TTY
3 - 13	time to answer	Time To Answer ringing/total waiting
14	blank	
15 - 30	blid	Billing Line Identification
31	blank	
32 - 38	cab	M911 Call Abandon tag
40 - 42	cdr100h	100-Hour Duration
43	blank	
44 - 45	npi	CLID Numbering Plan Identification
46	blank	
47	ton	CLID Type of Number
48	blank	
49 - 50	BCAP	Bearer Capability
51	blank	

Operating parameters

The Bearer Capability in CDR requires the new CDR format (that is, FCDR = NEW in LD 17).

If both the originating and terminating sides are trunks, the bearer capability information is taken from the incoming trunk.

If an initialization (INIT) occurs during an established trunk call, the bearer capability information is lost and "99" is output.

Feature interactions

The Bearer Capability in CDR provides the following interactions:

- ISDN Bearer Capability Information Element:

  The Bearer Capability in CDR feature does not change the bearer capability functionality; the bearer capability information in the CDR record is read from the message Call Register where it is stored. If a particular bearer capability is not supported by the system, it is not displayed in the bearer capability field in the CDR.

- DASS/DPNSS Service Indicator Code:

  The Bearer Capability in CDR feature does not change the Service Indicator Code (SIC) functionality; the bearer capability information in the CDR record is read from the channel block where it is stored. If a particular SIC is not supported by the system, it is not displayed in the bearer capability field in the CDR.

Feature packaging

Bearer Capability in CDR requires the following packages:

- Call Detail Recording (CDR) package 4
- Call Detail Recording on Teletype Terminal (CTY) package 5
- New Call Detail Recording (FCDR) package 234

Feature implementation

Task summary list:

The following is a summary of the tasks in this section:

1. Table 11: LD 17 - Configure the CDR records for the system. on page 30
2. Table 12: LD 15 - Enable printing of the Bearer Capability information in the CDR record for the customer group. on page 31

Table 11: LD 17 - Configure the CDR records for the system.

Prompt	Response	Description
REQ	CHG	Change existing data.
TYPE	PARM	Change system parameters data.
...		
FCDR	NEW	Enable new format for CDR record.

Table 12: LD 15 - Enable printing of the Bearer Capability information in the CDR record for the customer group.

Prompt	Response	Description
REQ	CHG	Change existing data.
TYPE	CDR	Call Detail Recording
CUST		Customer number
	0-99	Range for Large System, Call Server 1000E, and Media Gateway 1000E
CDR	YES	Allow CDR records for the customer.
...		
PORT	0-15	Serial Data Interface port
CNI	a..a	Calling Number Identification
- BCAP	YES	Enable Bearer Capability in CDR.

CDR BLID enhancement

You can configure CDR to print the Billing Line ID (BLID) field. When the initiator of a conference or transfer call established between two external DNs disconnects the line, the TTY port prints the initiator's number in the BLID field in the third line of end record. This is used for billing purpose.

Feature operation

This feature operates in two scenarios; Call transfer and Call conference.

Call transfer

Consider Set A as the initiator of the call transfer. Set A calls Set B and Set A initiates call transfer to Set C. After Set A completes the transfer and one of Set B or Set C releases the call, the TTY port prints the Set A number in the BLID field in the third line of the End Record.

Call conference

Consider Set A as the initiator of the call conference. Set A calls Set B and Set A conferences call to Set C. After Set A completes the conference and releases the call and one of Set B or Set C also releases the call, the TTY port prints the Set A number in the BLID field in the End Record.

Call Types

For each Customer group and each trunk route data block, you can program CDR to record the following call types:

- all outgoing trunk calls, or
- all outgoing toll trunk calls and/or
- all incoming toll calls with flexible definition of toll.

If Flexible Definition of Toll does not specify digits, toll calls are those with the digits 0 or 1 as the first or second digit after the access code.

Note:
Toll calls are flexibly defined based on the first or second digit dialed after the trunk route access code.

Feature implementation

Table 13: LD 16 - Configure CDR to record specific call types on trunk route.

Prompt	Response	Description
REQ	CHG	Change existing data block
TYPE	RDB	Route Data Block
CUST	xx	Customer number as defined in LD 15.
ROUT		Route number
	0-511	Range for Large System, Call Server 1000E, and Media Gateway 1000E
DES	x...x	Designator field for trunk (0-16 alphanumeric characters)
TKTP	a...a	Trunk Type
...		
CDR	(NO) YES	Call Detail Recording
- INC	(NO) YES	Incoming All Calls
- OAL	(NO) YES	Outgoing All
- - OTL	(NO) YES	Outgoing Toll

Calling Line Identification in CDR

Calling Line Identification in CDR (CCDR) package 118 provides the calling party's number in call records. Calling Line Identification (CLID) is an ISDN feature.

Incoming Primary Rate Access (PRA) calls contain a CLID field in the call-setup message. When the CLID is provided by the far end, it is shown in the user's digit display. As an option, CLID is included in CDR records. When CLID is set to YES in LD 17, CLID is output in N (Normal) and S (Start) records for both terminating and tandem nodes in an ISDN network environment.

CLID is configured in the Configuration Record (LD 17). For more information about configuring CLID, see *Avaya ISDN Primary Role Interface Features Fundamentals, NN43001-569*.

CLID and In-Band Automatic Number Identification (IANI) are mutually exclusive, because they both use the same field to output their information.

Feature implementation

Table 14: LD 17 - Configure CLID in CDR on the system.

Prompt	Response	Description
REQ	CHG	Change existing data.
TYPE	PARM	System Parameters
...		
- CLID	(NO) YES	Calling Line ID in CDR

Table 15: LD 16 - Configure CLID in CDR on the system.

Prompt	Response	Description
AUXP	(NO) YES	CLID presentation and CPND indicator status.
PII	(NO) YES	AUXP status

Feature interaction

With Avaya Communication Server 1000 (Avaya CS 1000) software, the Auxiliary Processor applications (AUXP) is available in LD 16. AUXP enhances the ability of the system to honor or ignore the Privacy Indicator for a Calling Party Privacy call based on the incoming route type.

Consider a scenario where an originating node, with blocked CLID, calls Node A (Set A and Aux A) and Node B (Set B and Aux B). The following table shows the results of PII and AUXP settings.

Table 16: PII and AUXP settings

Settings at Node A	Settings at Node B		
	PII - NO AUXP - NO	PII - NO UXP - YES	PII - YES AUXP - YES
PII - NO AUXP - NO Call to Node A	Set A: No presentation Aux A: No presentation Set B: No impact		
PII - NO AUXP - NO Call to Node B	Set A: No impact Set B: No presentation Aux B: No presentation	Set A: No impact Set B: No presentation Aux B: Presented	Set A: No impact Set B: Presented Aux B: Presented
PII - NO AUXP - YES Call to Node A	Set A: No presentation Aux A: Presented Set B: No impact		
PII - NO AUXP - YES Call to Node B	Set A: No impact Set B: No presentation Aux B: No presentation	Set A: No impact Set B: No presentation Aux B: Presented	Set A: No impact Set B: Presented Aux B: Presented
PII - YES AUXP - YES Call to Node A	Set A: Presented Aux A: Presented Set B: No impact		
PII - YES AUXP - YES Call to Node B	Set A: No impact Set B: Presented Aux B: Presented **Note:** For all calls tandem through Node A to Node B, the setting in Node A to ignore the presentation indicator, converts the call to 'unrestricted'. Hence, when PII is YES at Node A, all calls are treated as 'unrestricted' at Node B.		

Calling Party Number

The Calling Party Number (CPN) record is useful in matching phone Detail Records.

A P record is generated when a Calling Party Number (CPN) of 1 to 23 digits is entered for a CPN key assigned to Attendant Consoles and Business Communication Set (BCS) phones.

A BCS is synonymous to a Meridian 1 proprietary phone. A P record is generated each time the user presses the CPN key. Therefore, multiple P records can be generated.

Feature implementation

Task summary list

The following is a summary of the tasks in this section:

1. Table 17: LD 10 / 11 - Configure a calling party number key on a Meridian 1 proprietary phone. on page 35
2. Table 18: LD 12 - Configure a calling party number key on an attendant console. on page 35

Table 17: LD 10 / 11 - Configure a calling party number key on a Meridian 1 proprietary phone.

Prompt	Response	Description
REQ	CHG	Change existing data block
TYPE	a...a	Type of data block
TN		Terminal Number
	l s c u	Format for Large System, Call Server 1000E, and Media Gateway 1000E, where l = loop, s = shelf, c = card, u = unit
...		
KEY	xx CPN	Calling Party Number key, where xx = key number.

Table 18: LD 12 - Configure a calling party number key on an attendant console.

Prompt	Response	Description
REQ	CHG	Change existing data block
TYPE	a...a	Type of data block
TN		Terminal Number
	l s c u	Format for Large System, Call Server 1000E, and Media Gateway 1000E, where l = loop, s = shelf, c = card, u = unit
...		
KEY	xx CPN	Calling Party Number key, where xx = key number.

CDR Answer Supervision

The CDR Answer Supervision feature detects Answer Supervision which is sent as reverse battery from the Central Office. CDR Answer Supervision is available on the following trunk types:

- North American-based Ground Start trunks
- North American answer supervised Loop Start trunks with Answer Supervision
- International XFCOT Loop Start trunks
- DTI, DASS2, and EuroISDN trunks

CDR Answer Supervision record generation begins when Answer Supervision is received rather than when the trunk is seized. CDR begins when reverse battery is detected from the CO.

Note:

Your response to the SUPN prompt in LD 14 determines whether answer and disconnect supervision is required. For ground start trunks, disconnect supervision is detected even if SUPN = NO.

Note:

Trunks without Periodic Pulse Metering (PPM) and Answer Supervision capability continue to generate Call Detail Records based on when the trunk is seized.

Note:

Your response to the OPA prompt in LD 16 determines if CDR or CDAS records are generated for PPM pulses. If OPA = NO, trunks with PPM capability and without Answer Supervision capability continue to generate Call Detail Records, based on when the trunk was seized. If OPA = YES, trunks with PPM capability and without Answer Supervision capability generate Call Detail Records based on the receipt of the first PPM pulse.

The "A" character in the TERID (Terminating ID) field indicates that Answer Supervision was received on an answer supervised trunk, and that CDR timing started with the receipt of the Answer Supervision signal. A "T" character in the TERID field indicates that Answer Supervision was not received on an answer supervised trunk, and that CDR timing started at trunk seizure. For Ground and Loop Start trunks, the A appears when Answer Supervision is detected from the CO. This option can be selected at the AIA prompt in LD 16.

Class of Service

To enable Answer Supervision on North American or North American-based trunks, the Polarity Sensitive Pack (PSP) Class of Service must be set. PSP indicates that Answer Supervision is detected by battery reversal on the CO trunk.

Comments? infodev@avaya.com

If the Polarity Insensitive Pack (PIP) is configured, battery reversal is not detected, and Call Detail Recording begins at trunk seizure or when the first PPM pulse is received for PPM equipped trunks that have OPA = YES in LD 16.

For the international XFCOT to enable Answer Supervision, CLS must be set to Battery Supervised (BAT). BAT indicates that Answer Supervision is detected by battery reversal on the CO trunk. If CLS is not set to Battery Supervised (XBAT), battery reversal is not detected, and Call Detail Recording begins at trunk seizure or when the first PPM pulse is received for PPM equipped trunks that have OPA = YES in LD 16.

Refer to Table 19: Call Detail Record settings related to Answer Supervision on page 37 for the various Classes of Service, and their effects on Answer Supervision and Call Detail Records. This table applies to North American or North American-based ground and loop start trunks and international XFCOT trunks.

Table 19: Call Detail Record settings related to Answer Supervision

OAL	OTL	OAN	PSP/BAT	CDR affected	CDR begins
NO	NO	*	YES/NO	No CDR	
YES	N/A	N/A	NO	All calls	Trunk seizure
NO	YES	N/A	NO	Toll calls	Trunk seizure
YES	N/A	NO	YES	All calls	Reverse battery for answered calls Trunk seizure for unanswered calls
NO	YES	NO	YES	Toll calls	Reverse battery for answered calls Trunk seizure for unanswered calls
YES	N/A	YES	YES	Answered calls	Reverse battery
NO	YES	YES	YES	Toll calls	Reverse battery

Note:
If OAL and OTL = NO, then OAN is always NO.

Legend:
PSP = Answer Supervision CLS for Ground Start and Loop Start trunks
BAT = Battery Supervised XFCOT Loop Start trunks
OAL = CDR for outgoing calls OTL = CDR for outgoing toll calls
OAN = CDR for answered calls only
N/A = Not applicable. The option setting has no effect on CDR.

Feature implementation

Task summary list

The following is a summary of the tasks in this section:

1. Table 20: LD 16 - Configure trunk route for CDR with Answer Supervision. on page 38
2. Table 21: LD 14 - Configure each trunk for supervision-related Class of Service. on page 38

Table 20: LD 16 - Configure trunk route for CDR with Answer Supervision.

Prompt	Response	Description
REQ	CHG	Change existing data.
TYPE	RDB	Route Data Block
CUST	xx	Customer number as defined in LD 15.
ROUT		Route number
	0-511	Range for Large System, Call Server 1000E, and Media Gateway 1000E
DES	x...x	Designator field for trunk (0-16 alphanumeric characters)
TKTP	a...a	Trunk Type
CDR	(NO) YES	Call Detail Recording
...		
- OAL	(NO) YES	CDR on outgoing calls
- - AIA	(NO) YES	Answered Call Identification Allowed

Table 21: LD 14 - Configure each trunk for supervision-related Class of Service.

Prompt	Response	Description
REQ	CHG	Change existing data.
TYPE	a...a	Type of data block
...		
CLS		Class of Service
	(PIP)	Polarity Insensitive Pack
	PSP	Polarity Sensitive Pack

Prompt	Response	Description
	BST	Battery Supervised
	(XBAT)	Battery Supervised COT denied
	BAT	Battery Supervised COT

CDR 100 Hour Call

The Call Detail Recording 100 Hour Call feature allows CDR to accommodate calls with a duration greater than 99:59:59. To enable this feature, FCDR must be set to NEW in LD 17.

This feature produces a 100 Hour Duration field. This field is automatically displayed on the third line of all Fixed Format CDR record types that have the duration field.

The 100 Hour Call measurement reflects the one hundred, thousand, and ten thousand hours call duration. Accordingly, Call Detail Recording can record, up to a maximum of approximately eleven years and one hundred and fifty three days.

Feature implementation

Table 22: LD 17 - Configure the system for New Format CDR.

Prompt	Response	Description
REQ	CHG	Change existing data.
TYPE	PARM	System parameters
....		
- FCDR	NEW	Configure New Format CDR.

Call Detail Recording Enhancement

The CDR Enhancement (CDRX) feature enables customers to bill phone users for their participation in call segments. Affected calls include outgoing trunk calls transferred one or more times, and CO outgoing calls extended to another party by an attendant. CDR charges users connected to the call who originate and control each transfer. Billing is facilitated through a new CDR "X" record and through enhancements to the "S" (Start) and "E" (End) records.

The CDR Enhancement feature provides the following enhancements:

- Ensures local attendant-originated calls are allocated to the proper chargee.
- Generates CDR "X" records for stand-alone multiple call transfers on outgoing non-PPM CO trunks.
- Generates CDR "X" records for network multiple transfers on outgoing PPM and non-PPM CO trunks. Call Detail Recording Enhancement introduces the Billing Line Identification (BLID) CDR field to indicate the remote responsible party for the particular call duration specified in the Call Duration field in cases of network multiple call transfers.

Operating parameters

No special hardware is required for CDRX in stand-alone and network non-Periodic Pulse Metering (PPM) CO trunk scenarios. On network PPM trunks, PPM trunk cards are required.

Feature interactions

Conference/No-hold Conference

CDR Enhancement only contains enhancements to call transfer records. The following table explains the interaction between Conference/No-hold Conference and the CDR Enhancement.

Table 23: CDR Enhancement - Conference interaction

Scenario	Description
A calls an outgoing CO trunk and conferences B. **Note:** A, B and the CO trunk are on the same node.	An "S" record is generated against A at conference completion time. An "E" record is generated against the party that disconnects last (either A or B).
A calls an outgoing CO trunk; A transfers to B; B conferences C; C conferences D; B disconnects and C disconnects; D transfers to F. **Note:** All phones and CO trunks are on the same node.	An "S" record is generated against A at transfer time. An "X" record is generated against B when B completes the conference with C. No record is generated when C conferences D. No record is generated when either B or C disconnect. An "X" record is generated against D when D completes the call transfer to F. An "E" record is generated against F when F disconnects. Standalone PPM maintains its existing operation.

Scenario	Description
A calls an outgoing CO trunk; A transfers to B; B conferences C; C conferences D; B disconnects and C disconnects. D transfers to F. **Note:** Phone A and the CO trunk are in Node 1. Phones B, C, D, and F are in Node 2. Nodes 1 and 2 are connected by an ISDN TIE trunk.	An "S" record is generated against A at transfer time. No record is generated for B's conference to C or C's conference D. No record is generated when B disconnects. When C disconnects, an "X" record is generated against B. An "X" is generated against D when D completes the call transfer to F. An "E" record is generated against F when F disconnects.
Use the conference key for call transfer. A calls outgoing CO, A conferences to B, A disconnects, B conferences C, B disconnects, C conferences D, C disconnects and D transfers to F. **Note:** All phones and CO trunk are in the same node.	An "S" record is generated against A at transfer completion time. All the succeeding transfers and conferences do not generate any CDR record. An "E" record is generated when F disconnects.
Use conference key for call transferring. A calls outgoing CO and transfers to B. B conferences C, B disconnects, C conferences D, C disconnects. D transfers to F. **Note:** Phone A and CO trunks are on node 1. Phone B, C, D and F are in node 2. Node 1 and node 2 are connected with an ISDN TIE trunk.	An "S" record is generated against A when the transfer is complete. All succeeding transfers and conferences do not generate a CDR record. An "E" record is generated.

Standalone PPM Call Transfer

The CDR Enhancement feature ensures that CDR "S", "X", and "E" records do not operate as they do for stand-alone PPM. In an existing stand-alone PPM, an "S" or "X" record is generated when the originating party completes the call transfer and the third party answers.

In a non-PPM stand-alone environment, with the CDR enhancement, the "S" and "X" records are generated at transfer completion time. As soon as the originating party completes the call transfer, whether the third party answers or not, the CDR "S" or "X" record is printed. A CDR "E" record can be generated against an unanswered DN for its ringing time until the far-end trunk disconnects.

Override

When one station overrides another established station on a CDR trunk call, a Start record is generated for the trunk against the overridden party and a conference is established (however, if there was a previous Start or "X" record, the override generates an "X" record). An "E" record is generated against the last party to disconnect, whether they are the overridden or overriding party. However, if the far-end disconnects first while the override is in progress, the "E" record is generated against the conference DN.

Barge-in

When an attendant barges in on a CDR trunk connected to A, a CDR "S" record is generated against A and a conference is established. An "E" record is generated against A when A disconnects. However, if A disconnects before the attendant, an "E" is generated against the attendant when the attendant disconnects to show the barge-in duration and the attendant's duration on the call after A disconnects.

Call Forward

Call Forward All Calls: The following table explains the interaction between Call Forward All Calls and the CDR Enhancement feature.

Table 24: CDR Enhancement - Call Forward All Calls interaction

Scenario	Description
A calls an outgoing CO trunk, and transfers to B. B call forwards (all calls) to C, and C call forwards (all calls) to D. **Note:** All phones and the CO trunk are on the same node.	An "S" record is generated against A when the transfer is complete, whether or not D answers. When D disconnects, an "E" record is generated against D.
A calls an outgoing CO trunk, and transfers to B. B call forwards (all calls) to C, and C call forwards (all calls) to D. **Note:** A and the CO trunk are on Node 1. B, C, and D are on Node 2. Nodes 1 and 2 are connected by ISDN.	An "S" record is generated against A when the transfer is complete, whether D answers or not. When D disconnects, an "E" record is generated against D.
A calls an outgoing CO trunk, and transfers to B. B call forwards (all calls) to C, and C call forwards (all calls) to D. D transfers to E.	An "S" record is generated against A when the transfer is complete, whether or not D answers. When D transfers to E, an "X" record is generated against D. When E

Scenario	Description
Note: A and the trunk are on Node 1. B, C, D, and E are on Node 2. Nodes 1 and 2 are connected by ISDN.	disconnects, an "E" record is generated against E.

Call Forward No Answer: Table 25: CDR Enhancement - Call Forward No Answer interaction on page 43 explains the interaction between Call Forward No Answer and the CDR Enhancement.

Table 25: CDR Enhancement - Call Forward No Answer interaction

Scenario	Description
A calls an outgoing CO trunk, and transfers to B. B call forwards (no answer) to C, and C call forwards (no answer) to D. **Note:** All phones and the CO trunk are on the same node.	An "S" record is generated against A when the transfer is complete whether D answers or not. When D disconnects, an "E" record is generated against D.
A calls an outgoing CO trunk, and unguarded transfers to B. B call forwards (no answer) to C and C call forwards (no answer) to D. **Note:** A and the CO trunk are on Node 1. B, C, and D are on Node 2. Nodes 1 and 2 are connected by ISDN.	An "S" record is generated against A when the transfer is complete, whether or not D answers. When D disconnects, an "E" record is generated against B.
A calls an outgoing CO trunk, and unguarded transfers to B. B call forwards (no answer) to C, and C call forwards (no answer) to D. D transfers to E. **Note:** A and the CO trunk are on Node 1. B, C, D, and E are on Node 2. Nodes 1 and 2 are connected by ISDN.	An "S" record is generated against A at transfer completion, whether or not D answers. When D transfers to E, an "X" record is generated against B. When E disconnects, an "E" record is generated against E.
A calls an outgoing CO trunk, and guarded transfers to B. B call forwards (no answer) to C, and C call forwards (no answer) to D. D answers and A completes the transfer. D disconnects. **Note:** A and the CO trunk are on Node 1. B, C, and D are on Node 2. Nodes 1 and 2 are connected by ISDN.	An "S" record is generated against A when the transfer is complete. When D disconnects, an "E" record is generated against D.

Call Forward Busy: See Call Forward All Calls.

Internal Call Detail Recording (ICDR)

CDR Enhancement generates a CDR "X" record when the call transfer is complete if an outgoing CO trunk participates in the call. There are no changes to the ICDR feature. The two features are independent.

Call Waiting

In a call transfer on busy station A with Call Waiting Allowed, a CDR "S" or CDR "X" record is generated when the transferring station disconnects. An "E" record is generated when either A or the far-end/trunk disconnects. The CDR record includes the wait time.

Initialize

If the system initializes, CDR information is lost.

Attendant Recall

Table 26: CDR Enhancement - Attendant Recall interactions on page 44 explains the interaction between Attendant Recall and the CDR Enhancement feature.

Table 26: CDR Enhancement - Attendant Recall interactions

Scenario	Description
The attendant calls an outgoing CO trunk, and extends the call to A. A presses the Attendant Recall (ARC) key to recall the attendant and a three-party conference is established **Note:** The trunk is not a CDRX trunk.	An "S" record is generated against the attendant when the attendant presses the Release key. An "E" record is generated at the end of the call against the party that disconnects last. Standalone PPM maintains existing operation.
The attendant makes an outgoing CO call, and extends the call to A. A presses the Attendant Recall (ARC) key to recall the attendant and a three-party conference is established. **Note:** The trunk is a CDRX trunk.	An "S" record is generated against the attendant when the attendant presses the Release key. An "X" record is generated against A when the attendant presses the LOOP key to respond to the call. If A disconnects first, the attendant releases, and an "E" record is generated against the attendant. If the attendant releases first, an "X" record is generated against the

Scenario	Description
	attendant. An "E" record is generated against A when A disconnects.
The attendant makes an outgoing CO call, and extends the call to A. A presses the Attendant Recall (ARC) key twice to recall the attendant, which is also treated as a transfer complete. **Note:** The CO trunk is a CDRX trunk.	An "S" record is generated against the attendant when the attendant presses the Release key. An "X" record is generated against A when A presses the ARC key twice to complete the transfer. An "E" record is generated against the attendant when the attendant releases.

Hunting

See Call Forward All Calls.

Call Park

Table 27: CDR Enhancement - Call Park interaction on page 45 explains the interaction between Call Park and the CDR Enhancement feature.

Table 27: CDR Enhancement - Call Park interaction

Scenario	Description
A calls an outgoing CO trunk, and presses the Call Park key twice. Later, the CO recalls A. A disconnects.	An "S" record is generated against A when A presses the call park key twice. An "E" record is generated against A when either A or trunk disconnects.
A calls an outgoing CO, and transfers to B. B presses the Call Park key twice. The CO recalls B. B disconnects.	An "S" record is generated against A when the transfer is complete. When B presses the Call Park key twice, an "X" record is generated against B. The CO later recalls B. An "E" record is generated against B when either B or the trunk disconnects.
A calls an outgoing CO trunk, and presses the Call Park key twice. B dials Special Service Prefix (SPRE) + Parked Call Access code (72) + the identification number assigned to the parked call to access the parked call later. B transfers to C. C disconnects.	An "S" record is generated against A when A presses the Call Park key twice. An "X" record is generated against B when the transfer is complete, whether or not C answers. An "E" record is generated against C when either C or the CO trunk disconnects.

Call Pickup

Table 28: CDR Enhancement - Call Pickup interaction on page 46 explains the interaction between Call Pickup and the CDR Enhancement feature.

Table 28: CDR Enhancement - Call Pickup interaction

Scenario	Description
A makes an outgoing CO call, and transfers to B. B unguarded transfers to C and C does not answer. D picks up the call by pressing the DN key and the RNP key. **Note:** All phones are on the same node.	An "S" record is generated against A when the transfer is complete. An "X" record is generated against B when the transfer is complete. An "E" record is generated against C when D picks up the call. An "N" record is generated against D when either D or the far-end disconnects. If D does not disconnect, and instead transfers to E, an "S" record is generated against D when the transfer is complete. An "E" record is generated against E when E or the far end disconnects.
A makes an outgoing CO call, and transfers to B. B transfers to C and C does not answer. D picks up the call by pressing the DN key and the RNP key. **Note:** A and the CO are on Node 1. B, C, and D are on Node 2. Nodes 1 and 2 are connected by ISDN.	An "S" record is generated against A when the transfer is complete. An "X" record is generated against B when the transfer is complete. An "E" record is generated against C when D disconnects.
A makes an outgoing CO call, and transfers to B. B guarded transfers to C and C does not answer. D picks up the call by pressing the DN key and the RNP key. **Note:** All phones are on the same node.	An "S" record is generated against A when the transfer is complete. An "X" record is generated against B when the transfer is complete and D picks up the call. An "E" record is generated against D when D or the far end disconnects. If D does not disconnect, and instead transfers to E, an "X" record is generated against D when the transfer is complete. An "E" record is generated against E when E or the far end disconnects.

Automatic Call Distribution

For ACD Call Transfer, ACD Conference, and Network ACD, CDR records are generated as if these features are functioning in a non-ACD environment. For the Agent Observe sub-feature, CDR records are generated as they do in a non-ACD conference call.

Disconnect Supervision

The Central Office can notify the system trunk card that the office has released when the trunk has disconnect supervision. The far end or near end can control trunk disconnect. The CDR records are generated when the trunk disconnects.

Network Attendant Service

When a remote attendant at Node 1 is involved in an outgoing CDRX trunk at Node 2 through the ISDN network, the CDR at Node 2 treats it as if it were a call transfer. Table 29: CDR Enhancement - Network Attendant Service interaction on page 47 explains the interaction between Network Attendant Service and the CDR Enhancement feature.

Table 29: CDR Enhancement - Network Attendant Service interaction

Scenario	Description
The phone calls the attendant and the attendant extends out.	An "S" record is generated against the remote attendant DN (for example: 0000 or 0) and an "E" record is generated against the phone when the phone disconnects.
The attendant calls out and extends to a local phone.	An "S" record is generated against the remote attendant DN and another "E" record is generated against the phone when the phone disconnects.
The attendant calls the phone first and then extends out.	An "S record is generated against the remote attendant DN and another "E" record is generated against the phone when the phone disconnects.

Break-in

Table 30: CDR Enhancement - Break-in interaction on page 47 explains the interaction between Break-in and the CDR Enhancement feature.

Table 30: CDR Enhancement - Break-in interaction

Scenario	Description
A makes an outgoing CO call and then transfers to B. B is talking to the outgoing CO. C calls the attendant and the attendant Breaks-in to B. B disconnects.	An "S" record is generated against A when the transfer is complete. An "X" record is generated against B when the attendant Breaks-in. An "E" record is generated against the conference DN when B disconnects.

Break-in to Enquiry Calls

Table 31: CDR Enhancement - Break-in to Enquiry Calls interaction on page 48 explains the interaction between Break-in to Enquiry Calls and the CDR Enhancement feature.

Table 31: CDR Enhancement - Break-in to Enquiry Calls interaction

Scenario	Description
A makes an outgoing CO call, and transfers to B. B transfers to C, and is talking to C without completing the transfer. D calls the attendant, and the attendant Breaks-in to B. B disconnects. C is connected to the outgoing CO.	An "S" record is generated against A when the transfer is complete. An "X" record is generated against B when B disconnects. An "E" record is generated against C when C disconnects.

Attendant Metering Recall

This feature does not support Attendant Metering Recall.

Virtual Network Service

If "Trunk on Hold for Reuse" is not configured, the COT trunk is released when the VNS call is released. If the COT trunk is a PPM trunk, the different phones involved in the call will be charged as for a regular non-VNS call. CDR "N", "S", "X", and "E" records will generate according to the call modifications. CDRX/PPM operation should be transparent to the VNS feature.

If "Trunk on Hold for Reuse" is configured, the COT trunk remains established after the VNS call is released and a CDR "S" record is produced with no charge information. If a new VNS call uses the same trunk, a CDR "X" record is printed, once again containing no charge information.

Multiparty Operations

"Recovery of Misoperation on Call Transfer" interacts with the CDR Enhancement feature as shown in Table 32: CDR Enhancement - Multiparty Operations interaction on page 48.

Table 32: CDR Enhancement - Multiparty Operations interaction

Scenario	Description
A calls outgoing CO and transfers to B. B transfers to C and C does not answer. After a predefined number of rings, the call is	An "S" record is generated against A when the transfer is complete. An "X" record is generated against B when the transfer is

Scenario	Description
recalled to B. If B does not answer after a predefined number of rings the call is dropped.	complete. An "E" record is generated against C when C does not answer after a predefined number of rings and the call is recalled to B. An "N" record is generated against B when the call is dropped.

Busy Verification

Table 33: CDR Enhancement - Busy Verification interaction on page 49 explains the interaction between Busy Verification and the CDR Enhancement feature.

Table 33: CDR Enhancement - Busy Verification interaction

Scenario	Description
A calls an outgoing CO trunk and transfers to B. B is talking to the outgoing CO. The attendant performs a Busy Verification on B.	An "S" record is generated against A when the transfer is complete. An "X" record is generated against B when the attendant presses the Busy Verify key and dials B's DN. An "E" record is generated against B if the attendant disconnects before B. An "E" record is generated against the conference DN if B disconnects before the attendant. An "E" record is generated against the conference DN if the far-end trunk disconnects first.

Feature packaging

Call Detail Recording for stand-alone and network non-PPM environments requires the following software packages:

Call Detail Recording Enhancement (CDRX) package 259, which requires the following packages:

- Call Detail Recording (CDR) package 4
- Call Detail Recording Teletype Terminal (CTY) package 5
- New Format Call Detail Recording (FCDR) package 234

CDR for the attendant is included as part of Call Detail Recording (CDR) package 4 and is applicable to outgoing trunks.

Network PPM CDRX is included as part of Periodic Pulse Metering/Message Registration (MR) package 101.

Feature implementation

Task summary list

The following is a summary of the tasks in this section:

1. Table 34: LD 17 - Change the Configuration Record for CDR Enhancement. on page 50
2. Table 35: LD 16 - Configure the Route Data Block to print CDR X records. on page 50
3. Table 36: LD 15 - Configure the Customer Data Block for CDR Enhancement. on page 51

Table 34: LD 17 - Change the Configuration Record for CDR Enhancement.

Prompt	Response	Description
REQ	CHG	Change existing data
TYPE	PARM	Change system parameters
...		
- FCDR	NEW	Format for Call Detail Recording
- MTRO	PPM	Periodic Pulse Metering

Table 35: LD 16 - Configure the Route Data Block to print CDR X records.

Prompt	Response	Description
REQ	CHG	Change existing data
TYPE	RDB	Route data block
CUST	xx	Customer number as defined in LD 15.
ROUT		Route number
	0-511	Range for Large System, Call Server 1000E, and Media Gateway 1000E
...		
TKTP	COT	Central Office Trunk data block
	DID	Direct Inward Dialing trunk data block
	WAT	Wide Area Telephone Service trunk data block
	FEX	Foreign Exchange trunk data block

Prompt	Response	Description
...	...	
CDR	YES	CDR provided
- INC	(NO) YES	CDR records generated for incoming calls
- OAL	YES	CDR records generated for outgoing calls
- - OTL	(NO) YES	CDR on Outgoing Toll calls
- - OPD	(NO) YES	Outpulsed digits recorded in CDR
- CDRX	(NO) YES	Print CDRX records on multiple call transfer for non-PPM (Digital Trunk) outgoing calls. This prompt appears if CDRX package 259 is equipped, and "MR" is not "PPM", "XLD" "ENDC", "DURC", or "IFC" is not equal to 1TR6. NI2 does not support Advice of Charge (AOC) so MR is not prompted.

Table 36: LD 15 - Configure the Customer Data Block for CDR Enhancement.

Prompt	Response	Description
REQ:	CHG	Change existing data
TYPE:	CDR	CDR and Charge Account options
CUST		Customer number
	0-99	Range for Large System, Call Server 1000E, and Media Gateway 1000E
...		
CDR	YES	Call Detail Recording

Feature operation

No specific operating procedures are required to use this feature.

CDR Expansion

The CDR Expansion (CDRE) package 151 has the following three basic functions:

- modifies ORIGID and TERID fields to accommodate a 7 digit DN
- adds Feature Group D ANI (FGD ANI) information to a second line
- adds a blank and an "&" to the second line

If the DNXP (DN Expansion) package is equipped without the CDRE package, CDR records are generated with the leading digits truncated, that is, the DN fields contain only the trailing 4 digits of the DN.

This feature does not apply to packet data.

CDR on Busy Tone

The Call Detail Recording (CDR) on Busy Tone feature enhances the CDR record for abandoned calls.

With the CDR on Busy Tone feature, when the originator of an incoming or internal call disconnects after receiving a busy tone, a B record is produced. The CDR on Busy Tone information can be used for gathering statistics on customer response performance.

The CDR on Busy Tone B record information is displayed on the third line of the CDR B record for customers with the New CDR format (FCDR) configured. The third line is also used by the Time to Answer (TTA) feature. A 'B' (for Busy Tone Condition) is printed in the Redirection Identifier subfield. The TTA subfields that usually show the total ringing time and the total waiting time are left blank.

Table 37: Third line fields of CDR B record on page 52 shows the fields of the third line of output of a CDR B record.

Table 37: Third line fields of CDR B record

Line	Position	Field	Field Definition
3	2	&	additional line identifier
3	3-7	< >	5 blank spaces instead of TTA Total Ringing Time
3	8	B	Busy Tone identifier/Time To Answer (Redirection Identifier)
3	9-13	< >	5 blank spaces instead of TTA Total Waiting Time
3	14	< >	1 blank space at the end

Incoming calls and the Route Data Block Last prompt

The following are examples of incoming call scenarios and record outputs.

Simple incoming call

The following describes a simple incoming call scenario:

1. Route 10 member 4 places an incoming call to DN 4001.
2. DN 4001 is busy.
3. The system produces a CDR B record.

The CDR B record produced in the case of a network call or a Central Office (CO) incoming call has the following format:

```
B  001  00  T010004 4001     00/00  00:08:23
&                                          00 000
&    B
```

Incoming call - redirected internally

Last redirection is by Call Forward All Calls: The following scenario describes an incoming call that is redirected internally. The Call Forward All Calls feature redirects the call to a busy DN.

1. Route 10 member 4 places an incoming call to DN 4000.
2. DN 4000 forwards the call to DN 4001.
3. DN 4001 redirects the call, using Call Forward All Calls, to DN 4002.
4. DN 4002 is busy. The originating party receives a busy tone.
5. The system produces a CDR B record.

If LAST = YES in LD 16, the printed Terminating ID is the DN of the busy phone, DN 4002. The output is the following:

```
B  001  00  T010004 4002      00/00  00:08:23
&                                           000 000
&   B
```

If LAST = NO in LD 16, the printed Terminating ID is the DN of the dialed DN 4000. The output is the following:

```
B  001  00  T010004 4000      00/00  00:08:23
&                                           000 000
&   B
```

Last Redirection is by Hunting: The following scenario describes an incoming call that is redirected internally and the last redirection is by the Hunting feature:

1. Route 10 member 4 places call to DN 4000.
2. DN 4000 forwards the call to busy DN 4001.
3. DN 4001 is redirected, by Hunting, to DN 4002.
4. DN 4002 is busy. The originating party receives a busy tone.
5. The system produces a CDR B record.

If LAST = YES in LD 16, the printed Terminating ID is the DN of the first busy phone, DN 4001. The output is the following:

```
B  001  00  T010004 4001     00/00  00:08:23
&                                              000 000
&   B
```

Note:

If the last busy phone is a Basic Rate Interface (BRI) phone, the DN of this phone is printed as the terminating ID in the CDR B record.

If LAST = NO in LD 16, the printed Terminating ID is the dialed DN 4000. The output is the following:

```
B  001  00  T010004 4000         00/00  00:08:23
&                                                 000 000
&     B
```

Last Redirection is by Group Hunt: The following scenario describes an incoming call that is redirected internally and the last redirection is by the Group Hunt feature:

1. Route 10 member 4 places an incoming call to DN 4000.
2. DN 4000 forwards the call, using Call Forward All Calls, to Pilot DN 8888 of a Group Hunt list.
3. All members of the Group Hunt list are busy, and no queuing is allowed. The originating party receives a busy tone.
4. The system produces a CDR B record.

If LAST = YES in LD 16, the printed Terminating ID is Pilot DN 8888 of the Group Hunt List. The output is the following:

```
B  001  00  T010004 8888         00/00  00:08:23
&                                                 000 000
&     B
```

If LAST = NO in LD 16, the printed Terminating ID is the Dialed DN 4000. The output is the following:

```
B  001  00  T010004 4000         00/00  00:08:23
&                                                 000 000
&     B
```

Internal Calls

The record outputs for internal calls follow the same logic as that for incoming calls when LAST = YES in LD 16.

For internal calls, the Originating ID field on the first line of the CDR B record contains the DN of the phone that initiates the call. The contents of the Terminating ID field on the first line of the CDR B record depends on the type of the last redirection. The LAST prompt in LD 16 does not affect the Terminating ID for internal calls.

Table 38: Content of the Terminating ID field in the CDR B record on Busy Tone for Internal Calls and Incoming Calls when LAST = YES in LD 16 on page 55 summarizes the content of the Terminating ID field in the CDR B record on Busy Tone for scenarios involving internal calls and incoming calls when LAST = YES in LD 16.

Table 38: Content of the Terminating ID field in the CDR B record on Busy Tone for Internal Calls and Incoming Calls when LAST = YES in LD 16

Type of Last Redirection	Terminating ID in B record output
Simple Call (Not redirected)	DN of the busy phone
Call Forward All Calls	DN of the busy phone
Hunting	DN of the first busy phone. If terminating phone is a BRI phone, then DN of the BRI phone.
Group Hunt	Pilot DN

Table 39: Content of the Terminating ID field in the CDR B record on Busy Tone for Incoming Calls when LAST = NO in LD 16 on page 55NO in LD 16 summarizes the content of the Terminating ID field in the CDR B record on Busy Tone for scenarios involving incoming calls when LAST = NO in LD 16.

Table 39: Content of the Terminating ID field in the CDR B record on Busy Tone for Incoming Calls when LAST = NO in LD 16

Type of Last Redirection	Terminating ID in B record output
Simple Call (Not redirected)	DN of the busy phone
Call Forward All Calls	Originally dialed DN

Type of Last Redirection	Terminating ID in B record output
Hunting	Originally dialed DN
Group Hunt	Originally dialed DN

Operating parameters

In order for CDR on Busy Tone to be configured, the New CDR format (FCDR) package must be equipped and FCDR must be configured.

For a CDR B record on Busy Tone to be produced on internal calls, the Internal Call Detail Recording (ICDR) package must be equipped, and Internal CDR allowed must be configured in the Class of Service of at least one of the phones.

The CDR on Busy Tone feature is enabled/disabled on a route basis for incoming calls and on a phone Class of Service basis for internal calls. This is dependent upon general CDR and CDR Time To Answer (TTA) setup.

Incoming routes are configured in the Route Data Block by setting the CDRB prompt to YES.

For internal calls, Class of Service must be set to Abandoned Call Record and Time To Answer Allowed (ABDA) in LD 10, 11, or 27. In LD 12, ABAN must be set to ABDA.

For internal calls, the Terminating ID, printed in the B record, depends upon the type of the last redirection. The LAST concept does not apply.

For incoming calls, the Originating ID field on the first line of the CDR B record contains the Trunk route and member number on which the incoming call arrives. For internal calls, the Originating ID field contains the DN of the phone that initiates a call.

For incoming, redirected calls, the contents of the Terminating ID field depends upon the nature of the last redirection and the value of the LAST prompt in LD 16. When LAST = YES, the terminating DN (the busy DN) is printed. When LAST = NO, the dialed DN is printed.

The LAST prompt in the Route Data Block is attached to the incoming route. This prompt applies to local redirections that occur after a call arrives from that incoming route. Therefore, redirections that take place before arriving using the above route to the Busy Node are not taken into account.

B records are only output to CDR TTYs.

CDR on Busy Tone works on a stand-alone basis; therefore, redirections involving features, such as DPNSS Diversion and other network redirections do not apply to CDR.

CDR on Busy Tone produces a B record only if the busy condition is provided by a phone and not in the case of congestion. Also, the B record is only produced on the Busy Node.

For Time to Answer, CDR on Busy Tone does not apply to outgoing calls.

In the case of an internal call, if either the originating or the terminating phone is equipped with Abandoned Call Record and Time To Answer Allowed (ABDA), a B record is generated when the calling party receives a busy tone and abandons the call.

When Group Hunt is a call's last redirection, only the Abandoned Call Record and Time To Answer Allowed (ABDA) and Internal Call Detail Recording Allowed (ICDA) Classes of Service of the originating phone apply.

In LD 27, the maximum number of calls to be received at one time is set by the value of the MCAL prompt in the Digital Subscriber Loop (DSL) and in the Traffic Service Position (TSP). The value of MCAL in the DSL should not be greater than the one in the TSP. If this is the case, a warning is produced during service change in the DSL. However, if a wrong value is entered, no CDR B record is produced for that node.

Feature interactions

Attendant Console

When an incoming call arrives on a busy attendant and is put in a queue, the calling party does not receive a busy tone. However, in situations where a busy tone is provided to the calling party, a CDR B record is produced.

Automatic Call Distribution

When a CDR B record on Busy Tone is produced, the operation of the Automatic Call Distribution (ACD) feature is not affected. If a busy situation is encountered with ACD, the LAST concept does not apply, even in redirection situations. CDR on Busy Tone does not operate after ACD Night Treatment occurs.

Basic Rate Interface Phones

CDR on Busy Tone is supported on Basic Rate Interface (BRI) phones.

If the Hunting feature ends up on a busy BRI phone, a B record is produced. In this situation, for internal calls or incoming calls when LAST = YES, the Terminating ID in the B record is the DN of the BRI phone itself and not the DN of the first busy phone in the redirection chain. For incoming calls with LAST = NO, the TerID in the CDR B record is the dialed DN.

Call Waiting

If the terminating party is established on a call and it has a Call Waiting key configured, the originating party receives a ringback tone. Therefore, no CDR on Busy Tone record is produced.

Call Detail Recording Time To Answer

CDR on Busy Tone displays the busy tone state in the third line of the B record. The third line is displayed if Call Detail Recording Time to Answer (CDR TTA) is configured. CDR TTA also produces the B record for abandoned calls on ringing.

Conference No Hold Conference Transfer

If a conferee attempts to extend a conference locally to a busy phone, a B record on busy tone is produced. If a remote site in a conference tries to extend the conference to a busy phone through an incoming trunk, a CDR B record on busy tone is produced, if CDRB = YES on the incoming route. The same occurs when attempting to transfer a call to a busy phone.

Do Not Disturb

When a calling party receives a busy tone from the Do Not Disturb feature, a B record is produced.

Line Lockout

When Line Lockout occurs, the system provides an overflow tone to the "locked out" telephone as the telephone enters the lockout state. Meridian 1 proprietary phones are then idle, and analog (500/2500 type) phones appear busy to any incoming call. In this situation, a busy tone is provided to the calling party, and a CDR B record is produced.

Make Set Busy

If a phone is in a busy state because the Make Set Busy key is activated, a CDR B record is produced.

Multiple Directory Number/ Multiple Appearance Directory Number Redirection Prime

Single Call Arrangements (SCR): When a call is answered, the DN key is lit on all phones that share that DN. If another call attempts to reach that DN, the calling party receives a busy tone, and a CDR B record is produced.

Multiple Call Arrangements: If all appearances of a Multiple Appearance DN are busy, a busy tone is provided, and a CDR B record is produced.

In the case of a local call, a CDR B record is produced if one of the possible terminating phones or the originating phone is configured with the Abandoned call record and Time to Answer Allowed (ABDA) Class of Service and the Internal Call Detail Recording Allowed (ICDA) Class of Service. For an incoming call to a Multiple Appearance Directory Number (MADN), it is the configuration of the incoming route that is taken into account.

For a call involving an MADN, the Originating Auxiliary ID (OrigAuxID) and the Terminating Auxiliary ID (TerAuxID) on the second line of the B record indicate the Terminal Number (TN) of the MADN appearance involved in the call. If the MADN is the originator of the call, the OrigAuxID field contains the TN of the appearance that initiated the call. If the terminating party of the call is a busy MADN, the TN that is printed is the TN of the phone that was last configured.

Message Intercept

With this feature when the Ring Again feature encounters a busy DN, the calling party receives an announcement, stating that the Ring Again feature can be activated. In this case a busy tone is not provided, but a CDR B record is produced.

Meridian 911

Meridian 911 calls do not receive a busy tone. The only instance in which a busy tone is returned is when a test call is made which is only supported for 911T trunks. For maintenance purposes, a 911 test call can be made, and the system returns a permanent busy tone to the incoming 911 trunk. In this situation, a CDR B record is produced.

Night Service

If Night Service leads to a busy tone being returned to the originator, no CDR B record is produced.

Radio Paging

When a call is routed to a Radio Pager and encounters a busy tone, a B record is not produced.

Feature packaging

CDR on Busy Tone requires the following packages:

New Format Call Detail Recording (FCDR) package 234, which has the following package dependencies:

- Call Detail Recording (CDR) package 4
- Call Detail Recording on Teletype Machine (CTY) package 5
- Internal Call Detail Recording (ICDR) package 108

Feature implementation

Task summary list

The following is a summary of the tasks in this section:

1. Table 40: LD 17 - Configure New Format Call Detail Recording (FCDR) on the system. on page 60
2. Table 41: LD 15 - Configure Time to Answer for the customer group. on page 61
3. Table 42: LD 15 - Configure Call Detail Recording for the customer group. on page 61
4. Table 43: LD 16 - Configure CDR on Busy Tone on a trunk route basis. on page 61
5. Table 44: LDs 10, 11, or 27 - Define Abandoned call record on ringing or busy tone allowed and Internal Call Detail Recording Allowed Class of Service. on page 62
6. Table 45: LD 12 - Define Internal Call Detail Recording Allowed and Abandoned Call Record on ringing or busy tone for Attendant Consoles. on page 62

Table 40: LD 17 - Configure New Format Call Detail Recording (FCDR) on the system.

Prompt	Response	Description
REQ	CHG	Change existing data.

Prompt	Response	Description
TYPE	PARM	System Parameters.
...		
- FCDR	NEW	Use NEW CDR format.

Table 41: LD 15 - Configure Time to Answer for the customer group.

Prompt	Response	Description
REQ	CHG	Change existing data.
TYPE	FTR	Features and options
CUST		Customer number
	0-99	Range for Large System, Call Server 1000E, and Media Gateway 1000E
...		
OPT	(TTAD) TTAA	Time To Answer and Abandoned call records (Denied) Allowed.

Table 42: LD 15 - Configure Call Detail Recording for the customer group.

Prompt	Response	Description
REQ	CHG	Change existing data.
TYPE	CDR	Call Detail Recording
CUST		Customer number
	0-99	Range for Large System, Call Server 1000E, and Media Gateway 1000E
...		
CDR	YES	Call Detail Recording

Table 43: LD 16 - Configure CDR on Busy Tone on a trunk route basis.

Prompt	Response	Description
REQ	CHG	Change existing data.
TYPE	RDB	Route Data Block
CUST	xx	Customer number as defined in LD 15.
ROUT		Route number
	0-511	Range for Large System, Call Server 1000E, and Media Gateway 1000E

Prompt	Response	Description
...		
CDR	(NO) YES	CDR output for the specified route (not) allowed.
- INC	(NO) YES	CDR records (not) generated on incoming calls.
- LAST		CDR record printing content option for redirected calls.
	(NO)	The Terminating ID field in the CDR record will contain the one before the last party.
	YES	The Terminating ID field in the CDR record will contain the last party.
- TTA	(NO) YES	Time To Answer output in CDR (not) provided.
- ABAN	(NO) YES	CDR on abandoned calls on ringing (not) allowed.
- CDRB	(NO) YES	(Deny)/Allow CDR on abandoned calls on busy tone. In order for the CDRB prompt to appear, TTA must be set to YES.

Table 44: LDs 10, 11, or 27 - Define Abandoned call record on ringing or busy tone allowed and Internal Call Detail Recording Allowed Class of Service.

Prompt	Response	Description
REQ	NEW	Add new data.
	CHG	Change existing data.
TYPE	a..a	Phone type.
TN		Terminal Number
	l s c u	Format for Large System, Call Server 1000E, and Media Gateway 1000E, where l = loop, s = shelf, c = card, u = unit
...		
CLS	ABDA	Abandoned call record on ringing or busy tone allowed and Time To Answer allowed.
CLS	ICDA	Internal Call Detail Recording Allowed.

Table 45: LD 12 - Define Internal Call Detail Recording Allowed and Abandoned Call Record on ringing or busy tone for Attendant Consoles.

Prompt	Response	Description
REQ	NEW	Add new data.
	CHG	Change existing data.

Prompt	Response	Description
TYPE	xxxx	Console type, where xxxx is: ATT, 1250, 2250.
...		
ICDR	ICDA	Internal Call Detail Recording Allowed.
ABAN	ABDA	Abandoned call record on ringing or busy tone allowed and Time To Answer allowed.

Feature operation

No specific operating procedures are required to use this feature.

Internal Call Detail Recording

Internal Call Detail Recording (ICDR) package 108 provides a call record type for internal calls. An internal call record is output for stations or attendants with the Internal Call Detail Allowed (ICDA) Class of Service.

Feature implementation

Task summary list

The following is a summary of the tasks in this section:

1. Table 46: LD 10 - Configure analog (500/2500 type) phones with Internal CDR Class of Service. on page 63
2. Table 47: LD 11 - Configure Meridian 1 proprietary phone with Internal CDR Class of Service. on page 64
3. Table 48: LD 12 - Configure Attendant console with Internal CDR Class of Service. on page 64
4. Table 49: LD 27 - Configure Basic Rate Interface phone with Internal CDR Class of Service. on page 64

Table 46: LD 10 - Configure analog (500/2500 type) phones with Internal CDR Class of Service.

Prompt	Response	Description
REQ	CHG	Change existing data.

Prompt	Response	Description
TYPE	a...a	Phone type
...		
CLS		Class of Service
	(ICDD) ICDA	Internal Call Detail Recording (Denied) Allowed

Table 47: LD 11 - Configure Meridian 1 proprietary phone with Internal CDR Class of Service.

Prompt	Response	Description
REQ	CHG	Change existing data.
TYPE	a...a	Phone type
...		
CLS		Class of Service
	(ICDD) ICDA	Internal Call Detail Recording (Denied) Allowed

Table 48: LD 12 - Configure Attendant console with Internal CDR Class of Service.

Prompt	Response	Description
REQ	CHG	Change existing data.
TYPE	a...a	Attendant console type
TN		Terminal Number
	l s c u	Format for Large System, Call Server 1000E, and Media Gateway 1000E, where l = loop, s = shelf, c = card, u = unit
...		
ICDR		Class of Service
	(ICDD) ICDA	Internal Call Detail Recording (Denied) Allowed

Table 49: LD 27 - Configure Basic Rate Interface phone with Internal CDR Class of Service.

Prompt	Response	Description
REQ	CHG	Request
TYPE	DSL	Digital Subscriber Loop
...		
CLS		Class of Service

Prompt	Response	Description
	(ICDD) ICDA	Internal Call Detail Recording (Denied) Allowed

CDR on Redirected Incoming Calls

The Call Detail Recording on Redirected Incoming Calls feature provides enhancements to the Call Detail Recording (CDR) operation on incoming calls.

Without this feature, when an incoming call is redirected, the Terminating ID field of the CDR record shows the party before the last party in the redirection chain. It does not show the answering party. With the Call Detail Recording on Redirected Incoming Calls feature, the customer is provided with the option to retain that mode of operation (identify the party before last), or print the last party (the answering party) in the Terminating ID field. This functionality is provided for calls that have been redirected by:

- Call Forward All Calls
- Call Forward No Answer
- Call Forward Busy
- Hunt
- Intercept Computer (ICP) Call Forward

Feature implementation

Task summary list

The following is a summary of the tasks in this section:

1. Table 50: LD 15 - Configure the customer group for CDR. on page 65
2. Table 51: LD 16 - Configure the Terminating ID field LAST option in the trunk route. on page 66

Table 50: LD 15 - Configure the customer group for CDR.

Prompt	Response	Description
REQ	NEW	Add new data.
	CHG	Change existing data.
TYPE	CDR	Call Detail Recording
CDR	YES	CDR provided.

Table 51: LD 16 - Configure the Terminating ID field LAST option in the trunk route.

Prompt	Response	Description
REQ	NEW	Add new data.
	CHG	Change existing data.
TYPE	RDB	Route Data Block
CUST	xx	Customer number as defined in LD 15.
ROUT		Route number
	0-511	Range for Large System, Call Server 1000E, and Media Gateway 1000E
	0-127	Range for Small System
DES	x...x	Designator field for trunk (0-16 alphanumeric characters)
TKTP	a...a	Trunk Type
...		
CDR	(NO) YES	CDR provided.
- INC	(NO) YES	CDR records generated on incoming calls.
- LAST	(NO) YES	CDR record printing content option for redirected calls. If LAST = YES, the Terminating ID field in the CDR record will contain the last party. If LAST = NO, the Terminating ID field in the CDR record will contain the one before the last party.

CDR on TTY

To output call records on one or more RS-232-C compatible devices, CDR on TTY (CTY) package 5 must be equipped. It provides a hard copy of the call records and can be used with the other CDR optional packages.

Feature implementation

Table 52: LD 17 - Configure CDR on TTY.

Prompt	Response	Description
REQ	CHG	Change existing data.

Prompt	Response	Description
TYPE	ALARM	Alarm Filters
...		
- USER	CTY	CDR Teletype

CDR with Charge Account

The CDR with Charge Account (CHG) feature provides the capability to directly bill calls to specific charge account numbers.

Feature implementation

Task summary list

The following is a summary of the tasks in this section:

1. Table 53: LD 11 - Configure a Charge Account key on a Meridian 1 proprietary phone. on page 67
2. Table 54: LD 12 - Configure a Charge Account key on an attendant console. on page 67

Table 53: LD 11 - Configure a Charge Account key on a Meridian 1 proprietary phone.

Prompt	Response	Description
REQ	CHG	Change existing data block
TYPE	a...a	Phone type.
TN		Terminal Number
	l s c u	Format for Large System, Call Server 1000E, and Media Gateway 1000E, where l = loop, s = shelf, c = card, u = unit
...		
KEY	xx CHG	Charge account key

Table 54: LD 12 - Configure a Charge Account key on an attendant console.

Prompt	Response	Description
REQ	CHG	Change existing data block

Prompt	Response	Description
TYPE	a...a	Type of attendant console.
TN		Terminal Number
	l s c u	Format for Large System, Call Server 1000E, and Media Gateway 1000E, where l = loop, s = shelf, c = card, u = unit
...		
KEY	xx CHG	Charge account key

CDR with Outpulsed Digits

When a CDR record is generated for an outgoing call on a route which has an outgoing call option for CDR specified, the dialed digits are placed in the call record. When the Outpulsed Digits (OPD) feature is enabled for the route, the DIGITS field contains the digits actually outpulsed by the system.

This feature only applies to Basic Alternate Route Selection (BARS) and Network Alternate Route Selection (NARS) calls. If both the BARS and NARS packages are equipped, the CDR record follows the BARS format by default. Coordinated Dialing Plan (CDP) and Route Selection-Automatic Number Identification (RS-ANI) are not supported by this feature.

The Outpulsed Digits (OPD) option is most useful when a Location Code call overflows onto the public network. With the OPD option selected, these calls are more easily matched with their toll charges, which are listed in the telephone company's bill.

The following examples show how CDR output is affected by the OPD feature. Each example shows the recorded digits for three CDR records:

Example 1: A Location Code call that stays within ESN

Digits dialed: 6 555 2315 Digits Outpulsed: 2315 Trunk Access Code: 487 Equipped Package: BARS

- When OPD is not used, the Digits field = 4875552315
- When OPD = NO (disabled), the Digits field = 4875552315
- When OPD = YES (enabled), the Digits field = 4872315

Example 2: A Location Code call that is routed to the public network

Digits dialed: 6 555 2315 Digits Outpulsed: 14089882315 Trunk Access Code: 487 Equipped Package: BARS

- When OPD is not used, the Digits field = 4875552315
- When OPD = NO (disabled), the Digits field = 4875552315
- When OPD = YES (enabled), the Digits field = 48714089882315

Example 3: A call onto the public network

Digits dialed: 6 408 555 2315 Digits Outpulsed: 14085552315 Trunk Access Code: 932 Equipped Package: BARS

- When OPD not used, the Digits field = 9324085552315
- When OPD = NO (disabled), the Digits field = 9324085552315
- When OPD = YES (enabled), the Digits field = 93214085552315

Example 4: A Location Code call that stays within ESN

Digits dialed: 6 555 2315 Digits Outpulsed: 2315 Trunk Access Code: 457 Equipped Package: NARS (BARS not equipped)

- When OPD is not used, the Digits field = 65552315
- When OPD = NO (disabled), the Digits field = 65552315
- When OPD = YES (enabled), the Digits field = 65552315

Note:

If the Location Code is outpulsed, it appears twice in the CDR Digits field.

Example 5: A Location Code call that is routed to the public network

Digits dialed: 6 555 2315 Digits Outpulsed: 14089882315 Trunk Access Code: 457 Equipped Package: NARS (BARS not equipped)

- When OPD is not used, Digits field = 65552315
- When OPD = NO (disabled), Digits field = 65552315
- When OPD = YES (enabled), Digits field = 645714089882315

Example 6: A call onto the public network

Digits dialed: 6 408 555 2315 Digits Outpulsed: 14085552315 Trunk Access Code: 932 Equipped Package: NARS (BARS not equipped)

- When OPD is not used, Digits field = 64085552315
- When OPD = NO (disabled), Digits field = 64085552315
- When OPD = YES (enabled), Digits field = 693214085552315

Feature implementation

Table 55: LD 16 - Configure CDR with the Outpulsed Digits option on the trunk route

Prompt	Response	Description
REQ	CHG	Change existing data.
TYPE	RDB	Route Data Block

Prompt	Response	Description
CUST	xx	Customer number as defined in LD 15.
ROUT		Route number
	0-511	Range for Large System, Call Server 1000E, and Media Gateway 1000E
DES	x...x	Designator field for trunk (0-16 alphanumeric characters)
TKTP	a...a	Trunk Type
...		
CDR	(NO) YES	Call Detail Recording
- OAL	(NO) YES	CDR on outgoing calls
- - OPD	(YES) NO	Outpulsed Digits

Coordinated Dialing Plan with CDR Enhancement

The Coordinated Dialing Plan (CDP)/CDR Enhancement allows a customer to preserve CDP digits in the CDR output. The customer can select between having the Distant Steering Code (DSC) or Trunk Steering Code (TSC) replaced by the trunk route Access Code (ACOD), or having the trunk route ACOD inserted ahead of the DSC or TSC in the CDR output.

For a complete description of Coordinated Dialing Plan and Electronic Switched Network (ESN), refer to *Avaya Dialing Plans Reference, NN43001-283*.

Feature implementation

Table 56: LD 15 - Configure the Coordinated Dialing Plan with CDR Enhancement.

Prompt	Response	Description
REQ	CHG	Change existing data.
TYPE	CDR	Call Detail Recording
CUST		Customer number
	0-99	Range for Large System, Call Server 1000E, and Media Gateway 1000E
	0-31	Range for Small System
...		
CDPR	(NO) YES	Coordinated Dialing Plan (CDP) CDR Enhancement

Dialed Number Identification Service (DNIS)

The Dialed Number Identification Service (DNIS) number (after translation within the system) tells the answering party what number the caller dialed. This number may tell the user what the caller wants. The DNIS can be a maximum of 7 digits.

DNIS can be used with or without Supplementary Features (SUPP) package 131 and regardless of the FCDR setting in LD 17. With FCDR = OLD, the CDR record contains only four DNIS digits, either the first four, or the last four. Which four digits are recorded is determined by the response to the WDGT prompt in LD 16. If WDGT = F, the first four digits are recorded. If WDGT = L, the last four digits are recorded. If FCDR = NEW, the CDR record will contain seven DNIS digits.

The DNIS number is appended to the end of the existing CDR record when the trunk disconnects. The DNIS number is put into the following:

- S (Start) record in all cases
- N (Normal) record when the call is established
- E (End) record in all cases except cases where the incoming trunk disconnects first

DNIS is included in the call record after Feature Group D (FGD) digits only if:

- The DNIS and CDR packages are equipped.
- The route is a DNIS route.
- The DNIS option is turned ON.
- DCDR = YES in the Route Data Block (LD 16).

The In-Band Automatic Number Identification (IANI) feature also uses this field.

DNIS supports Network ACD (NACD) and Feature Group D (FGD). If a DNIS trunk call is rerouted to a remote target ACD agent through NACD and the incoming ISDN trunk's Route Data Block has DNIS-CDR enabled, the DNIS number appears at the end of Normal, Start, and End records. The DNIS number also appears at the end of CDR records for incoming FGD trunks that have the DNIS-CDR option enabled in their Route Data Block.

For details, refer to *Avaya Automatic Call Distribution Fundamentals, NN43001-551*.

Feature packaging

DNIS Length Flexibility is included in DNIS package 98. The DNIS package requires the following packages:

- Automatic Call Distribution A (ACDA) package 45
- Digit Display (DDSP) package 19

- Incoming DID Digit Conversion (IDC) package 113
- New CDR Format package 234

Feature implementation

In addition to enabling the New CDR Format package, the following parameters must be configured. Otherwise, the old CDR format is used, and only four DNIS digits are added to the CDR TTY record.)

Table 57: LD 16 - Configure DNIS digits to output in CDR for a trunk route

Prompt	Response	Description
REQ	CHG	Change existing data.
TYPE	RDB	Route Data Block
CUST	xx	Customer number as defined in LD 15.
ROUT		Route number
	0-511	Range for Large System, Call Server 1000E, and Media Gateway 1000E
DES	x...x	Designator field for trunk (0-16 alphanumeric characters)
TKTP	a...a	Trunk Type
...		
AUTO	YES	Auto terminate
- DNIS	(NO) YES	DNIS route
- - NDGT	1-(4)-7	Number of DNIS Digits to record
- - WDGT	(L) F	Last 4 digits to record, first 4 digits to record
- - DCDR	(NO) YES	DNIS in CDR

End-to-End Signaling (EES)

The End-to-End Signaling (EES) digits are always output in the DIGITS field of the CDR record. EES digits are dialed after the end-of-dial (EOD) timer expires, after the octothorpe (#) has been pressed, or after Answer Supervision is received. EES digits often include sensitive information such as authorization codes and account numbers.

The system administrator has the option of suppressing or including the end-to-end digits in the DIGITD field. This is administered in LD 15 by entering the appropriate response to the ECDR prompt.

Feature implementation

Table 58: LD 15 - Configure the CDR to suppress or include the EEs digits.

Prompt	Response	Description
REQ:	CHG	Change existing data.
TYPE:	CDR	Call Detail Recording
CUST		Customer number
	0-99	Range for Large System, Call Server 1000E, and Media Gateway 1000E
	0-31	Range for Small System
...		
ECDR	(NO) YES	End-to-End Signaling digits included in DIGITS field of CDR.

Enhanced Malicious Call Trace

Refer to *Avaya Features and Services, NN43001-506* for detailed information about the operation of the following features related to Malicious Call Trace:

- Malicious Call Trace
- Malicious Call Trace DN/TN Print
- Malicious Call Trace Idle
- Malicious Call Trace on Direct Inward Dialing

The Malicious Call Trace (MCT) feature generates a CDR record when the following conditions are met:

- The Trace (TRC) key is pressed during an established call on a Meridian 1 proprietary phone or Attendant Console, or a Flexible Feature Code is dialed from any phone (default is SPRE + 83).
- The Class of Service of the phone is MCTA.
- CDR is allowed for the Customer group.
- A TTY port is configured for MCT, or there is a maintenance TTY port.

The Malicious Call Trace feature is not supported on BRI phones. The call trace record can be printed on any Serial Data Interface (SDI) port when MCT is defined as a user. It is also written to the history file.

Note:

If MCT is not defined, the record is printed on the maintenance TTY(s) only.

The record identifier is MCI for an internal call or MCE for an external call.

The following is an example of a record for an external call:

Table 59: Example 1 Record for an external call

```
MCE CUST01  RM31 10 *ATT05       S 14:24:05 10/03/1994 CNI# 98745678912
CLID#0119012345  *DN1234
```

Table 60: The first line of the MCT record on page 74 describes the first line of the MCT record. Note positions 12 and 27

Table 60: The first line of the MCT record

Position	Name	Definition	Format
1-3	RECTYPE	Record Type:	
		Internal Call External Call	MCI MCE
4	<blank>	Blank space	
5-10	CUSTNO	Customer Number	CUSTxx
11	<blank>	Blank space	(one blank space)
12	STAR1	* if originator activates MCT Blank if terminator activates MCT	* (one blank space)
13-25	ORIGID	Originating Identification: Internal Party Directory Number ACD Position ID Attendant Number External route and member number Conference Number	 TNXXXX DNXXXX ACD XXXXXXX ATTNXX RMXXX XXX CFLLNN
26	<blank>	Blank space	(one blank space)
27	STAR2	* if terminator activates MCT Blank if originator activates MCT	* (one blank space)
28-40	TERID	Terminating Identification: Internal Party Directory Number ACD Position ID	TNXXXX DNXXXX ACD XXXXXXX ATTNXX

Position	Name	Definition	Format
		Attendant Number External route and member number Conference Number	 RMXXX XXX CFLLNN
41	<blank>	Blank space	(one blank space)
42	ATT	Source is attendant console Destination is attendant console	S D
43	<blank>	Blank space	(one blank space)
63	<blank>	Blank space	(one blank space)
64-67	CNI	Calling Number Identification	CNI#
68	<blank>	Blank space	(one blank space)
69-84	CNINO	CNI Digits for MFC	XXXXXXXXXXXXXXXX

The second line of the MCT record shows the originating and terminating IDs as two DNs or as a combination of DN and CLID numbers.

Feature implementation

Task summary list

The following is a summary of the tasks in this section:

1. Activate the MCTA Class of Service for the phones in LD 16 (analog 500/2500-type phones) and LD 11 (Meridian 1 proprietary phones).
2. Assign a TRC key in LD 11 or assign an FFC code in LD 57, if SPRE +83 is not acceptable.
3. Define MCT on a TTY port in LD 17 if you want a dedicated Malicious Call Trace TTY.

Feature Group D (FGD) Automatic Number Identification

CDR records in which an incoming FGD trunk is involved can include an ANI digits field. However, CDRE package 151 must be equipped to have this option. The ANI field option is per route, defined in its FGD block (FGDB). The ANI field is only supplied in "N" and "S" record types, in both TTY and link formats. It includes two information digits (II) and either a 10 digit number (NPANXXXXXX) or a 3 digit number (NPA).

An indicator appears on the CDR record when the record has an ANI field. The ANI field printout is not dependent on the tenant or CLID fields being printed or if the FCDR prompt in LD 17 is set to OLD if FCDR is equipped.

For example, if no Tenant or CLID information is required, the CDR record consists of one line of ANI as well as tenant and CLID. If the tenant package is equipped and it is printing a record which has tenant number fields, even if no tenant information is printed in the record, the second line is printed. If only II+NPA are received in the call, these are printed in their usual positions and the rest of the ANI field is filled with blank characters. If no ANI information is received for the call, the ANI field is blank.

Feature implementation

Task summary list

The following is a summary of the tasks in this section:

1. LD 19 - Activate the FGDB.
2. LD 16 - Assign a Feature Group and Block Number (FGNO) to applicable trunk routes.

Flexible CDR Digit Suppression

This option allows a customer to suppress a flexible number of dialed digits in the DIGITS field of CDR records. The Number of Digits Printed (NDP) prompt in LD 16 affects dialed digits, including EES digits, with one exception. When both ECDR = YES in LD 15 and OPD = YES in LD 16, NDP affects only the outpulsed digits; the EES digits are not affected. The specified number of digits (0 to 32) are truncated from the end of the dialed digit string on both TTY and magnetic tape outputs.

Feature implementation

Table 61: LD 16 - Configure Flexible CDR Digit Suppression on the trunk route data block.

Prompt	Response	Description
REQ	CHG	Change existing data.
TYPE	RDB	Route Data Block
CUST	xx	Customer number as defined in LD 15.

Prompt	Response	Description
ROUT		Route number
	0-511	Range for Large System, Call Server 1000E, and Media Gateway 1000E
	0-127	Range for Small System
DES	x...x	Designator field for trunk (0-16 alphanumeric characters)
TKTP	a...a	Trunk Type
...		
CDR	(NO) YES	Call Detail Recording
- NDP	INC 0-32	Output the first 0-32 digits
	EXC 0-32	Suppress the last 0-32 digits

Format CDR

When equipped, the new Format CDR (FCDR) package 234 allows the user to select the Format of CDR records output on CDR Teletype (TTY) devices. When the "NEW" CDR format is selected, this feature outputs CDR items in fixed locations.

Prior to the introduction of the Format when the "new" CDR format is not selected, CDR items are output in various locations depending on which packages are equipped.

The CDR format is selected on a system-wide basis using input to the FCDR prompt in LD 17. Table 62: CDR TTY output format selection on page 77 highlights the requirements for the CDR formats

Table 62: CDR TTY output format selection

Format CDR (Package 234)	FCDR prompt (LD 17)	CDR output format
Not equipped		OLD
Equipped	OLD	OLD
Equipped	NEW	NEW

The following are examples of the OLD and NEW CDR formats for the Internal CDR record:

Table 63: Example 2 OLD CDR format for the Internal CDR L record

```
L 001 00 2238    2238     003.0.00.07 003.0.00.06 02/01 15:17 00:00:02
```

Table 64: Example 2 NEW CDR format for the Internal CDR L record

```
L 001 00 2238    2238    02/01 15:17:00 00:00:02.0
&                                        003.0.00.07 003.0.00.06
&
```

Note:
For the NEW CDR format, all fields are output. If the field is blank, it is output as spaces.

Feature implementation

Table 65: LD 17 - Configure the NEW CDR format on the system.

Prompt	Response	Description
REQ	CHG	Change existing data.
TYPE	PARM	System Parameters
BCAP	a...a	Bearer Capability, where a...a = (SPEECH) or 3.1 KHz
-FCDR	(OLD) NEW	Format CDR.

In-Band Automatic Number Identification

In-Band Automatic Number Identification (IANI) displays the ANI number when a call terminates on an ACD DN. IANI and ISDN cannot be configured on the same trunk group. The ANI display is shown in place of the CLID field on the second display line. For a complete description of the ANI feature, see *Avaya Features and Services, NN43001-506*.

IANI and Calling Line Identification (CLID) are mutually exclusive because they both use the same field to output information.

Feature implementation

Table 66: LD 19 - Configure the In-Band ANI feature.

Prompt	Response	Description
REQ	CHG	Change existing data.
TYPE	FGDB	Feature Group D

Prompt	Response	Description
... CDAN	(NO) YES	CDR to include Automatic Number Identification.

Japan Central Office Trunks

Half Second duration accuracy

With this feature equipped, the user has the option of selecting half-second (0.5) duration accuracy instead of normal two-second duration accuracy. Half-second accuracy is selected by responding YES to the DUR5 prompt in LD 17.

Feature implementation

Table 67: LD 17 - Configure half-second accuracy for CDR records.

Prompt	Response	Description
REQ	CHG	Change existing data.
TYPE	PARM	System Parameters
...		
- DUR5	(NO) YES	Half-second duration accuracy

M911 Enhancements: Call Abandon and MADN Display Coordination

The M911 Enhancements feature enables the system to treat an abandoned call as though the calling party remains online. This feature consists of two elements: Call Abandon and Multiple Appearance Directory Number (MADN) Display Coordination.

With the Call Abandon feature activated, a 911 caller who aborts a call is not lost. Instead, the call forwards to an ACD queue. When the call is presented to an ACD agent, Automatic Number Identification (ANI) information appears on the agent's phone display and Automatic Location

Identification (ALI) appears on the screen update. The call is then tagged in CDR Q and N records as an abandoned call.

The new MADN feature provides the following functionality. When a 911 call-taker on an MADN phone places an emergency 911 caller on hold, the current terminal screen remains on the display. When a 911 call-taker answers another call, either a new call or a retrieved-from-hold call, the terminal display is updated to include the current information for the call.

No B record is generated for an M911 abandoned call. B record generation is package dependent and applies only to an established call with Internal CDR.

Format CDR (FCDR) package 234 must be equipped and New CDR Format (NFCR) must be configured to receive call abandon information.

Feature implementation

Task summary list

The following is a summary of the tasks in this section:

1. Table 68: LD 16 - Configure the trunk route for M911 Enhancements. on page 80
2. Table 69: LD 56 - Configure the Call Abandon on Answer tone. on page 80

Table 68: LD 16 - Configure the trunk route for M911 Enhancements.

Prompt	Response	Description
REQ	CHG	Change existing data.
TYPE	RDB	Route data block
CUST	xx	Customer number as defined in LD 15.
...		
M911_ANI	(NO) YES	Receive ANI digits for Meridian 911 routes.
- M911_ABAN	(NO) YES	(Do not allow) Allow abandoned call treatment for route.
- M911_TONE	(YES) NO	(Supply) Do not supply call abandon tone for call taker when abandoned call is answered.

Table 69: LD 56 - Configure the Call Abandon on Answer tone.

Prompt	Response	Description
REQ	CHG	Change existing data.
TYPE	FTC	Flexible Tones and Cadences

Prompt	Response	Description
....		
CAB	(NO) YES	M911 Call abandon on Answer tone
TDSH	i bb cc tt	TDS external, burst, cadence, and tone
XTON	0-255	NT8D17 TDS Tone code
XCAD	0-255	NT8D17 cadence code for FCAD

Time to Answer

The Time to Answer (TTA) feature outputs information which indicates the length of time taken to answer a call. The information output is:

- time the call was in the ringing state
- type of redirection, if redirection occurred
- the total waiting time

TTA is only output in the NEW CDR format.

TTA information is output on the third line in three subfields. The three subfields are:

- Time to Answer (total ringing time)
- Time to Answer (redirection indicator)
- Time to Answer (total waiting time)

Along with the preceding information, the Time to Answer feature also introduces a new B (Abandoned call) record. This record is output when a party, either in the ringing state or in queue, disconnects.

Limitations

ACD queuing time, calls to ACD queues and calls on ACD DNs do not generate a Time To Answer field.

Feature implementation

Task summary list

The following is a summary of the tasks in this section:

1. Table 70: LD 17 - Configure NEW Format CDR on your system. on page 82
2. Table 71: LD 15 - Configure the Customer Group for Time to Answer CDR information. on page 82
3. Table 72: LD 16 - Configure the trunk route for Time to Answer CDR. on page 82
4. Table 73: LD 10 - Configure analog (500/2500-type) phones for the Abandoned Call Record Class of Service. on page 83
5. Table 74: LD 11 - Configure Meridian 1 proprietary phones for the Abandoned Call Record Class of Service. on page 83
6. Table 75: LD 12 - Configure attendant consoles for the Advanced Call Record Class of Service. on page 84
7. Table 76: LD 27 - Configure Basic Rate Interface phones for Abandoned Call Record Class of Service. on page 84

Table 70: LD 17 - Configure NEW Format CDR on your system.

Prompt	Response	Description
REQ	CHG	Change existing data.
TYPE	PARM	System Parameters
...		
- FCDR	(OLD) NEW	New Format CDR

Table 71: LD 15 - Configure the Customer Group for Time to Answer CDR information.

Prompt	Response	Description
REQ	CHG	Change existing data.
TYPE	ATT	Attendant consoles
CUST		Customer number
	0-99	Range for Large System, Call Server 1000E, and Media Gateway 1000E
	0-31	Range for Small System
OPT	(TTAD) TTAA	Time to Answer information and Abandoned call records (Denied) Allowed

Table 72: LD 16 - Configure the trunk route for Time to Answer CDR.

Prompt	Response	Description
REQ	CHG	Change existing data block.
TYPE	RDB	Route Data Block

Prompt	Response	Description
CUST	xx	Customer number as defined in LD 15.
ROUT		Route number
	0-511	Range for Large System, Call Server 1000E, and Media Gateway 1000E
	0-127	Range for Small System
DES	x...x	Designator field for trunk (0-16 character alphanumeric)
TKTP	a...a	Trunk Type
...		
CDR	(NO) YES	Call Detail Recording
- TTA	(NO) YES	Time to Answer output
- ABAN	(NO) YES	Abandoned call records output

Table 73: LD 10 - Configure analog (500/2500-type) phones for the Abandoned Call Record Class of Service.

Prompt	Response	Description
REQ	CHG	Change existing data.
TYPE	a...a	Type of phone
...		
CLS		Class of Service
	(ABDD) ABDA	Abandoned call record and Time to Answer (Denied) Allowed

Table 74: LD 11 - Configure Meridian 1 proprietary phones for the Abandoned Call Record Class of Service.

Prompt	Response	Description
REQ	CHG	Change existing data.
TYPE	a...a	Type of phone
...		
CLS		Class of Service
	(ABDD) ABDA	Abandoned call record and Time to Answer (Denied) Allowed

Table 75: LD 12 - Configure attendant consoles for the Advanced Call Record Class of Service.

Prompt	Response	Description
REQ	CHG	Change existing data.
TYPE	a...a	Type of attendant console
TN		Terminal Number
	l s c u	Format for Large System, Call Server 1000E, and Media Gateway 1000E, where l = loop, s = shelf, c = card, u = unit
	c u	Format for Small System, where c = card and u = unit
...		
ICDR	(ICDD) ICDA	Internal Call Detail Recording (Denied) Allowed
- ABAN	(ABDD) ABDA	Abandoned call record and Time to Answer (Denied) Allowed

Table 76: LD 27 - Configure Basic Rate Interface phones for Abandoned Call Record Class of Service.

Prompt	Response	Description
REQ	CHG	Change existing data.
TYPE	DSL	Digital Subscriber Loop
DSL	l s c dsl	Digital Subscriber Loop address
...		
CLS		Class of Service
	(ABDD) ABDA	Abandoned call record and Time to Answer (Denied) Allowed

Meridian 1 Packet Handler (MPH)

CDR for the Meridian 1 Packet Handler (MPH) package 248 produces two record types. When either or both originating and terminating Terminal Service Profiles (TSPs, defined in LD 27) have CDR, the system generates an internal "G" record. A call that connects to the public data network, including calls between two different MPH applications on the same switch, generates an external "H" record.

External CDR configuration is based on the Customer Data Block (LD 15). Incoming and/or outgoing packet data calls may generate external CDR records.

Implementation

Task summary list

The following is a summary of the tasks in this section:

1. Table 77: LD 15 - Configure Customer group CDR for packet data calls. on page 85
2. Table 78: LD 27 - Configure CDR in the DSL service profile for the BRI terminals. on page 85

Table 77: LD 15 - Configure Customer group CDR for packet data calls.

Prompt	Response	Description
REQ	CHG	Change existing data.
TYPE	CDR	Call Detail Recording
CUST		Customer number
	0-99	Range for Large System, Call Server 1000E, and Media Gateway 1000E
	0-31	Range for Small System
IMPH	(NO) YES	CDR for incoming packet data call
OMPH	(NO) YES	CDR for outgoing packet data call

Table 78: LD 27 - Configure CDR in the DSL service profile for the BRI terminals.

Prompt	Response	Description
REQ	CHG	Change existing data.
TYPE	TSP	Terminal Service Profile
DSL	l s c dsl	Digital Subscriber Loop address
...		
CDR	(NO) YES	Internal CDR

Message Registration

The Message Registration option is selected on a per-system basis by responding to the MTRO prompt in LD 17 under the PARM gate opener. At the MTRO prompt, either MR (Message Registration) or PPM (Periodic Pulse Metering) can be entered.

Periodic Pulse Metering

With the Message Registration (MR) package 101 equipped and the Periodic Pulse Metering (PPM) feature enabled, the total pulse count and call charge fields are included in CDR records. With PPM enabled, Transfer (X) records are also output containing information about intermediate segments of outgoing calls that are internally transferred several times.

PPM is applicable to both analog and digital Central Office/Public Exchange trunks.

Advice of Charge

Advice of Charge (AOC) information is delivered as part of the Primary Rate Access (PRA) signaling protocol between the system and ISDN Public Exchanges.

Two AOC sub-services are supported. The first sub-service is the AOC-ENDC (end of call). With this sub-service, charge information is only delivered at the end of the call when the connection is released between the system and the Public Exchange. With this sub-service, all intermediate X (Transfer) records output "OVF99" in the Meter Overflow field indicating that no charge information is available until the end of the call.

The second sub-service is the AOC-DURC (during call). With this sub-service, charge information is delivered as the call is modified and output in X records.

The system is capable of receiving AOC Information Elements from a number of ISDN Public Exchanges.

Metered Transferred Call

Table 79: Example 4 Metered Transferred Call on page 87 is a sample output for a Call Transfer which involves a metered call.

Table 79: Example 4 Metered Transferred Call

```
S 008 00 DN7234 T004016 007.2.04.03 09/07 10:01 00:03:0 9660100
00029 000058

X 027 00 DN5345 T004016             09/07 10:10
00037 000074

X 044 00 DN5346 T004016             09/07 10:10
00003 000006

E 046 00 DN5333 T004016             09/07 10:14 00:09:55
00031 000062
```

Note:
The second line in each record is charge and call information.

Note:
Other unrelated call records can be inserted between these records.

From Table 79: Example 4 Metered Transferred Call on page 87, the Start and End times and duration for each segment of the call can be calculated as follows:

ORIGID	Start time	End Time	Duration
7234	10:01	10:04	3 minutes 8 seconds
5345	10:04	10:10	6 minutes
5346	10:10	10:10	Less than 1 minute
5333	10:10	10:14	4 minutes
Total Call	10:01	10:14	13 minutes 4 seconds

Feature implementation

Task summary list

The following is a summary of the tasks in this section:

1. Table 80: LD 17 - Configure Periodic Pulse Metering on the system. on page 88
2. Table 81: LD 15 - Configure Periodic Pulse Metering or Advice of Charge parameters for the customer. on page 88
3. Table 82: LD 16 - Configure Periodic Pulse Metering or Advice of Charge parameters on the trunk route. on page 88

Table 80: LD 17 - Configure Periodic Pulse Metering on the system.

Prompt	Response	Description
REQ	CHG	Change existing data block.
TYPE	PARM	System Parameters
BCAP	a...a	Bearer Capability, where a...a = (SPEECH) or 3.1 KHz
...		
PARM	YES	Parameters
- MTRO		Metering Option.
	(MR)	Message Registration.
	PPM	Periodic Pulse Metering.

Table 81: LD 15 - Configure Periodic Pulse Metering or Advice of Charge parameters for the customer.

Prompt	Response	Description
REQ	CHG	Change existing data.
TYPE	PPM	Periodic Pulse Metering
CUST		Customer number
	0-99	Range for Large System, Call Server 1000E, and Media Gateway 1000E
	0-31	Range for Small System
HMTL	(YES) NO	Hotel/Motel environment
PCDL	(NO) YES	PPM and AOC output on CDR Data Link
UCST	0-9999	Unit Cost per PPM or AOC unit

Table 82: LD 16 - Configure Periodic Pulse Metering or Advice of Charge parameters on the trunk route.

Prompt	Response	Description
REQ	CHG	Change existing data.
TYPE	RDB	Route Data Block

Prompt	Response	Description
CUST	xx	Customer number as defined in LD 15.
ROUT		Route number
	0-511	Range for Large System, Call Server 1000E, and Media Gateway 1000E
	0-127	Range for Small System
DES	x...x	Designator field for trunk (0-16 alphanumeric characters)
TKTP	a...a	Trunk Type
...		
OPA	(YES) NO	Outgoing PPM Answer
CCO	(NO) YES	Call Charge Output option
...		
MR		Message Registration
	(NO)	The route is not metered.
	STAC	The AOC information is decoded at the start of the call.
	DURC	The AOC information is decoded during and at the end of the call.
	ENDC	The AOC information is decoded at the end of the call.
	PPM	Buffered Periodic Pulse Metering signals to be counted on this route.
	RVB	Reverse battery signal from PSTN/CO interpreted as a supervisory signal and used as MR on this route.
	XLD	M&MM Lead non-buffered is used on this route.
RUCS	0-9999	Route Unit Cost per PPM pulse or AOC unit
RUCF	0-9999 0-3	Route Unit Conversion Factor

Multi-Customer Operation

Multi-Customer Operation allows each customer within a single system to individually select the CDR feature and its options. The feature is enabled or disabled on a customer basis in the Customer Data Block (LD 15).

Feature implementation

Table 83: LD 15 - Configure CDR parameters for Customer Group.

Prompt	Response	Description
REQ	CHG	Change existing data.
TYPE	CDR	Call Detail Recording
CUST		Customer number
	0-99	Range for Large System, Call Server 1000E, and Media Gateway 1000E
	0-31	Range for Small System
CDR	(NO) YES	Change CDR data for the Customer Group.
...	...	

Multi-Frequency Compelled signaling

The Multi-Frequency Compelled (MFC) signaling feature provides a new Digits Type identifier: "C". The "C" is output in N (Normal), S (Start) and E (End) records to identify MFC Calling Number Identification (CNI) information.

Calling Number Information is output for incoming routes that have CDR activated for incoming calls and that are configured to receive MFC CNI.

Feature implementation

Table 84: LD 14 - Configure trunks for Calling Number Identification.

Prompt	Response	Description
REQ	CHG	Change existing data.
TYPE	a...a	Type of data
...		
CLS		Class of Service
	(CND) CNA	Calling Number Identification (Denied) Allowed

Multi-Tenant Service

When your system is equipped with Multi-Tenant Service (TENS) package 86, the tenant numbers of the originating and terminating parties are included in CDR records.

Feature implementation

Task summary list

The following is a summary of the tasks in this section:

1. Table 85: LD 93 - Activate Multi-Tenant Service. on page 91
2. Table 86: LD 10 - Activate the Multi-tenant service Class of Services for analog (500/2500-type) phones and assign a tenant number. on page 91
3. Table 87: LD 11 - Activate Multi-Tenant service Class of Services for Meridian 1 proprietary phones and assign a tenant number. on page 92

Table 85: LD 93 - Activate Multi-Tenant Service.

Prompt	Response	Description
REQ	NEW	Add new data.
...		
TYPE	TENS	Multi-Tenant Service
...		
CUST	xx	Customer number as defined in LD 15.

Table 86: LD 10 - Activate the Multi-tenant service Class of Services for analog (500/2500-type) phones and assign a tenant number.

Prompt	Response	Description
REQ	CHG	Change existing data
...		
TYPE	a...a	Type of phone
...		
TN		Terminal Number

Prompt	Response	Description
	l s c u	Format for Large System, Call Server 1000E, and Media Gateway 1000E, where l = loop, s = shelf, c = card, u = unit
	c u	Format for Small System, where c = card and u = unit
...		
CLS	TENA	Tenant Service Allowed
...		
TEN	1-511	Tenant Number

Table 87: LD 11 - Activate Multi-Tenant service Class of Services for Meridian 1 proprietary phones and assign a tenant number.

Prompt	Response	Description
REQ	CHG	Change existing data.
...		
TYPE	a...a	Phone type
...		
TN		Terminal Number
	l s c u	Format for Large System, Call Server 1000E, and Media Gateway 1000E, where l = loop, s = shelf, c = card, u = unit
	c u	Format for Small System, where c = card and u = unit
...		
CLS	TENA	Tenant Service Allowed
...		
TEN	1-511	Tenant Number

Multiple Appearance Directory Numbers

As a customer option, an Auxiliary Identification (AUXID) can supplement a Multiple Appearance Directory Number (MADN). An AUXID provides the loop, shelf, card, and unit of the originating phone. An AUXID field is provided only if the originating phone has an MADN as the prime DN. If a call originates from an MADN which is not the prime DN, the prime DN is shown as the originating ID with no AUXID field provided. AUXID output in CDR is configured on a customer basis in LD 15.

Note:
The Multiple Appearance DN Redirection Prime (MARP) does not affect CDR feature.

Feature implementation

Table 88: LD 15 - Configure AUXID output in CDR for a customer group.

Prompt	Response	Description
REQ	CHG	Change existing data.
TYPE	CDR	Call Detail Recording
CUST		Customer number
	0-99	Range for Large System, Call Server 1000E, and Media Gateway 1000E
	0-31	Range for Small System
CDR	(NO) YES	Change Call Detail recording Data.
...		
AXID	(NO) YES	(No) Auxiliary Identification output in CDR record.

Network Metering CDR Enhancement

If the Enhanced Call Detail Recording (CDRX) package 259 is not equipped or the CDRX prompt in LD 16 is set to NO, network call transfers which involve metered trunks generate an S (Start) record for the first transfer and an (E) End record when the last party disconnects.

If a transfer string is "mixed", meaning some local transfers followed by a network transfer, S and X records are generated for the local transfers. However, the first network transfer generates an "X" record and no further transfers are recorded. The only further record is the E record.

When CDRX package 259 is equipped and CDRX = YES in LD 16, network call transfers involving metered trunks generate CDR S (Start), X (Transfer) and E (End) records for all local and network transfers.

The point in time at which the records are generated is determined by the transfer destination. If the call is being transferred within the same node, an X or E record is generated when the party the call is transferred to answers. If the call is being transferred to another node, an X or E record is generated when the transferring party completes the transfer. That is, the X or E record is generated when the transferring party presses the Transfer key a second time for Meridian 1 proprietary phones or goes on-hook following a consultation connection for analog (500/2500-type) phones.

The Network Metering CDR Enhancement requires the NEW CDR format to output the new BLID (Billing Line Identification) field. The BLID field is added to the third line of the S, X, and E records to indicate the remote billing party for a particular call segment.

In instances where a call accessed the network at one node and terminated at another node without terminating on the first node, only an N (Normal) record will be produced at the first node. The N record will include the BLID (Billing Line Identification) field.

Feature implementation

Table 89: LD 16 - Configure CDR on the route for the Network Metering CDR Enhancement.

Prompt	Response	Description
REQ	CHG	Change existing data.
TYPE	RDB	Route Data Block
CUST	xx	Customer number as defined in LD 15.
ROUT		Route number
	0-511	Range for Large System, Call Server 1000E, and Media Gateway 1000E
	0-127	Range for Small System
DES	x...x	Designator field for trunk (0-16 character alphanumeric)
TKTP	a...a	Trunk Type
...		
CDR	(NO) YES	Call Detail Recording
- CDRX	(NO) YES	CDR X records printed for multiple call transfers

NPI and TON in CDR

The Numbering Plan Identification (NPI) and Type Of Number (TON) in Call Detail Recording (CDR) feature allows NPI and TON information to be optionally displayed on the third line of CDR records. NPI and TON are associated with Calling Line Identification (CLID) information, and are useful for billing incoming calls to the originating party.

The NPI and TON are only displayed for calls on an incoming ISDN trunk. Also, the New Format CDR (FCDR) prompt must be set to NEW and the Calling Line Identification (CLID) prompt must be set to YES in LD 17. Figure Figure 1: Third line format for CDR record on page 95 illustrates the format of the third line of a CDR ticket.

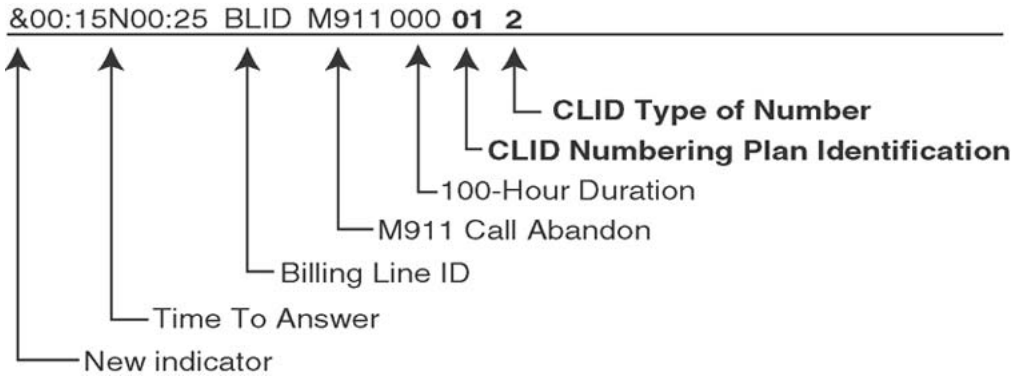

Figure 1: Third line format for CDR record

Table Table 90: Third line contents of the CDR record on page 95 describes the contents of the third line of the CDR record.

Table 90: Third line contents of the CDR record

Line	Position	Field	Field Definition
3	1	blank	
3	2	&	New line indicator
3	3-7	TTA	Time To Answer (Total ringing time)
3	8	REDIR/B	Time To Answer (Redirection Indicator)/Busy Tone Identifier
3	9-13	TWT	Time To Answer (Total Waiting Time)
3	14	blank	
3	15-30	BLID...xxx	Billing Line ID
3	31	blank	
3	32-38	ABANDON	M911 Call Abandon Tag
3	39	blank	
3	40-42	000	100-Hour Duration
3	43	blank	
3	44-45	NPI	CLID Numbering Plan Identification
3	46	blank	
3	47	TON	CLID Type Of Number
3	48	blank	

Figure 2: Scenario involving a call over a Meridian Customer Defined Network on page 96 illustrates a scenario in which DN 4000 (on Node 1) places a call to DN 4100 (on Node 2) over a Meridian Customer Defined Network (MCDN), using a Coordinated Dialing Plan (CDP)

Distant Steering Code (DSC). The call arrives at Node 2 on Route 201 Member 4. A CDR N record is produced when the call is disconnected.

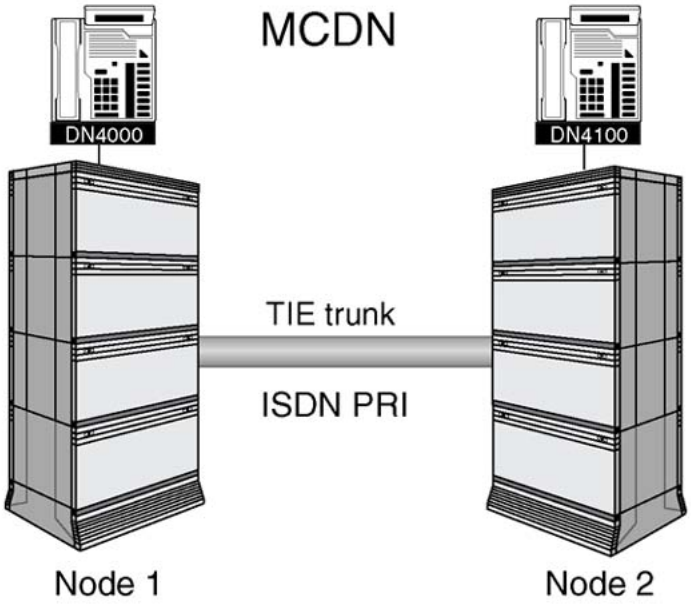

Figure 2: Scenario involving a call over a Meridian Customer Defined Network

The CDR N record produced in Figure 2: Scenario involving a call over a Meridian Customer Defined Network on page 96has the following format:

```
N 001 02 T201004 DN4100 02/10 18:07:15:00:02:24.0
& 4000XXXXXXXXXXXX
&00:15N00:25 BLIDXXXXXXXXXXX         000 09 6
```

On line 3 of the ticket, the NPI value of "09" represents a private numbering plan. The TON value of "6" represents an Electronic Switched Network (ESN) Customer Dialing Plan (CDP). Refer to Table 91: NPI information printed in the CDR record for an MCDN incoming trunk on page 97 and Table 92: TON information printed in the CDR record for an MCDN incoming trunk on page 97 for the NPI and TON information for an MCDN incoming trunk.

When an incoming call arrives on the system, NPI and TON are sent in the calling party Information Element (IE) and are mapped into internal values. The correspondence between the system values and the values given in the specifications are described in Table 91: NPI information printed in the CDR record for an MCDN incoming trunk on page 97 to Table 100: TON information printed in the CDR record for an NI-2 incoming trunk on page 101.

Tables Table 91: NPI information printed in the CDR record for an MCDN incoming trunk on page 97 to Table 100: TON information printed in the CDR record for an NI-2 incoming trunk on page 101 show the information printed in the CDR record, depending on the incoming trunk protocol. As shown in these tables, not all combinations of NPI and TON exist.

In the TON tables, only ISDN/Telephony numbering plan (Rec. E.164/E.163) and private numbering plans are detailed. For all other supported NPI values, TON has the value of "unknown number".

Based on the scenario in Figure 2: Scenario involving a call over a Meridian Customer Defined Network on page 96, Tables Table 91: NPI information printed in the CDR record for an MCDN incoming trunk on page 97 and Table 58: LD 15 - Configure the CDR to suppress or include the EEs digits. on page 73 on page Table 91: NPI information printed in the CDR record for an MCDN incoming trunk on page 97 show the NPI and TON information for an MCDN incoming trunk.

Table 91: NPI information printed in the CDR record for an MCDN incoming trunk

NPI code in CDR	Corresponding value of NPI in specification
00	000 - unknown numbering plan
01	0001 - ISDN/Telephony numbering plan (Rec. E.164)
02	not used
03	not used
04	not used
08	not used
09	1001 - private numbering plan

Table 92: TON information printed in the CDR record for an MCDN incoming trunk

TON code in CDR	Corresponding value of TON in specification	
	NPI = ISDN/Telephony numbering plan (Rec. E.164)	NPI = private numbering plan
0	0000 - unknown number	0000 - unknown number
1	0001 - international number	not used
2	0010 - national number	not used
3	not used	0011 - ESN SPN
4	0100 - local number	not used
5	not used	0101 - ESN LOC
6	not used	0110 - ESN CDP

Table 93: NPI information printed in the CDR record for a EuroISDN incoming trunk on page 98 and Table 94: TON information printed in the CDR record for a EuroISDN incoming trunk on page 98 show the NPI and TON information for a EuroISDN incoming trunk.

Table 93: NPI information printed in the CDR record for a EuroISDN incoming trunk

NPI code in CDR	Corresponding value of NPI in specification
00	0000 - unknown
01	0001 - ISDN/Telephony numbering plan (Rec.E.164/E.163)
02	not used
03	0011 - data numbering plan (Rec.X.121)
04	0100 - telex numbering plan (Rec.F.69)
08	1000 - national standard numbering plan
09	1001 - private numbering plan

Table 94: TON information printed in the CDR record for a EuroISDN incoming trunk

TON code in CDR	Corresponding value of TON in specification	
	NPI = ISDN/Telephony numbering plan (Rec. E.164)	NPI = private numbering plan
0	000 - unknown or 110 - abbreviated number	000 - unknown or 110 - abbreviated number or 001 - level 2 regional number
1	001 - international number	cannot be mapped
2	010 - national number	010 - level 1 regional number
3	011 - network specific number	011 - network specific number
4	100 - subscriber number	100 - subscriber number
5	not used	not used
6	cannot be mapped	cannot be mapped

Table 95: NPI information printed in the CDR record for a QSIG incoming trunk on page 98 and Table 96: TON information printed in the CDR record for a QSIG incoming trunk on page 99 show the NPI and TON information for a QSIG incoming trunk.

Table 95: NPI information printed in the CDR record for a QSIG incoming trunk

NPI code in CDR	Corresponding value of NPI in specification
00	0000 - unknown
01	0001 - ISDN/Telephony numbering plan (Rec.E.164/E.163)
02	not used
03	0011 - data numbering plan (Rec.X.121)
04	0100 - telex numbering plan (Rec. F.69)

NPI code in CDR	Corresponding value of NPI in specification
08	1000 - national standard numbering plan
09	1001 - private numbering plan
Note: QSIG refers to ISO QSIG and ETSI QSIG.	

Table 96: TON information printed in the CDR record for a QSIG incoming trunk

TON code in CDR	Corresponding value of TON in specification	
	NPI = ISDN/Telephony numbering plan (Rec. E.164)	NPI = private numbering plan
0	000 - unknown or 110 - abbreviated number	000 - unknown or 110 - abbreviated number or 001 - level 2 regional number or 101 - level3 regional number
1	001 - international number	cannot be mapped
2	010 - national number	010 - level 1 regional number
3	011 - network specific number	011 - PTN specific number
4	100 - subscriber number	100 - local number
5	not used	cannot be mapped
6	cannot be mapped	cannot be mapped
Note: QSIG refers to ISO QSIG and ETSI QSIG.		

Table 97: NPI information printed in the CDR record for a non-UIPE and non-MCDN incoming trunk on page 99 and Table 98: TON information printed in the CDR record for a non-UIPE and non-MCDN incoming trunk on page 100 show the NPI and TON information for a non-UIPE and non-MCDN incoming trunk.

Table 97: NPI information printed in the CDR record for a non-UIPE and non-MCDN incoming trunk

NPI code in CDR	Corresponding value of NPI in specification
00	0000 - unknown numbering plan
01	0001 - Rec. E.164
02	0010 - Rec. E.163
03	0011 - Rec. X.121
04	0100 - Telex numbering plan

NPI code in CDR	Corresponding value of NPI in specification
08	1000 - national numbering plan
09	1001 - private numbering plan

Note:
Non-UIPE refers to the 1TR6, AXE-10 for Australia and Sweden, Swissnet 2, Numeris VN4, SYS-12, and D70 connectivities.

Table 98: TON information printed in the CDR record for a non-UIPE and non-MCDN incoming trunk

TON code in CDR	Corresponding value of TON in specification	
	NPI = ISDN/Telephony numbering plan (Rec. E.164)	NPI = private numbering plan
0	0000 - unknown number[1]	0000 - unknown number[1]
1	0001 - international number[2]	not used
2	0010 - national number[2]	not used
3	not used	0011 - network specific number[2]
4	0100 - subscriber number[2]	not used
5	not used	not used
6	not used	0110 - abbreviated number[2]

Note:
For SYS-12, AXE-10 for Australia and Sweden, Swissnet, Numeris VN4, and D70 interfaces, all received values are mapped into unknown code.

Note:
For all interfaces not mentioned in note1.

Table 99: NPI information printed in the CDR record for an NI-2 incoming trunk on page 100 and Table 100: TON information printed in the CDR record for an NI-2 incoming trunk on page 101 show the NPI and TON information for an NI-2 incoming trunk.

Table 99: NPI information printed in the CDR record for an NI-2 incoming trunk

NPI code in CDR	Corresponding value of NPI in specification
00	0000 - unknown numbering plan
01	0001 - ISDN/Telephony numbering plan (Rec. E.164)
02	unused
03	unused

NPI code in CDR	Corresponding value of NPI in specification
04	unused
08	unused
09	1001 - private numbering plan

Table 100: TON information printed in the CDR record for an NI-2 incoming trunk

TON code in CDR	Corresponding value of TON in specification	
	NPI = ISDN/Telephony numbering plan (Rec. E.164)	NPI = private numbering plan
0	not used	not used
1	001 - international number	not used
2	010 - national number	not used
3	not used	not used
4	100 - local number	100 - subscriber number
5	not used	not used
6	not used	not used

Operating parameters

The NPI and TON in CDR feature applies only for incoming ISDN trunk calls. NPI and TON information depends on the incoming trunk protocol.

The NPI and TON fields are left blank for internal calls, outgoing trunks, incoming non-ISDN trunks, or if the CLID prompt is set to NO.

When the FCDR prompt is set to OLD, the NPI and TON fields do not exist, regardless of how the CLID prompt is defined.

NPI and TON information is available with the following incoming interfaces: EuroISDN, QSIG (ISO and ETSI), MCDN, non-UIPE and non-MCDN, and NI2.

NPI and TON information is included in all types of CDR records that contain CLID information.

NPI and TON information is lost when system initialization occurs and the call is then reconstructed. In this case, if the call involves an incoming ISDN trunk and if the NPI and TON in CDR feature is configured, the NPI field contains two zeros (00) and the TON field contains one zero (0), regardless of the NPI and TON sent at call setup.

Feature interactions

There are no feature interactions associated with this feature.

Feature packaging

The NPI and TON in CDR feature requires the following packages:

- Call Detail Recording (CDR) package 4
- Call Detail Recording on Teletype Machine (CTY) package 5
- New Format Call Detail Recording (FCDR) package 234
- Calling Line Identification in Call Detail Recording (CCDR) package 118

Feature implementation

Table 101: LD 17 - Configure the NPI and TON fields in CDR for the system.

Prompt	Response	Description
REQ	CHG	Change existing data.
TYPE	PARM	System Parameters
...		
FCDR	NEW	New Format CDR
...		
CLID	YES	TON and NPI fields, in addition to CLID, are included.
...		

Note:
For the NPI and TON in CDR feature, existing CDR implementation procedures must be performed.

Note:
CLID must be configured for the NPI and TON in CDR feature. Refer to the Calling Line Identification and ISDN Calling Line Identification Enhancements feature modules in *Avaya ISDN Primary Rate Interface Features Fundamentals, NN43001-569*.

Feature operation

No specific operating procedures are required to use this feature.

Priority to CDR

When the Priority for CDR (PCDR) option is selected, idle call registers are used for CDR operations before they are used for call processing. The Priority to CDR feature helps to ensure that all calls are recorded by CDR. This feature does not apply to packet calls.

Feature implementation

Table 102: LD 17 - Configure Priority to CDR on the system.

Prompt	Response	Description
REQ	CHG	Change existing data.
TYPE	PARM	System Parameters
...		
- PCDR	(NO) YES	Priority for CDR

Public Network Feature Invocation records

To support the NEAX-61 ISDN PRI Connectivity feature for New Zealand, a "Y" CDR record type is introduced. This record is only output in the NEW CDR format and indicates when a system user accesses a feature on the Central Office/Public Exchange to which they are connected using an ISDN link. The only feature capable of generating "Y" records is the "PSTN Three Party Conferencing" feature supported by the NEAX-61.

Whether "Y" records are generated is defined on a route basis.

Feature implementation

Table 103: LD 16 - Configure Y record capability on the trunk route.

Prompt	Response	Description
REQ	CHG	Change existing data block
TYPE	RDB	Route Data Block
CUST	xx	Customer number as defined in LD 15.
ROUT		Route number
	0-511	Range for Large System, Call Server 1000E, and Media Gateway 1000E
	0-127	Range for Small System
DES	x...x	Designator field for trunk (0-16 alphanumeric characters)
TKTP	a...a	Trunk Type
...		
CDR	(NO) YES	Call Detail Recording
- CDRY	(NO) YES	Call Detail Recording Y (Public Network Feature Invocation) records

Public Service Telephone Network (PSTN) Three Party Conferencing

For information on this feature, "PSTN Three Party Conferencing".

R2MFC CNI/CDR Enhancements

The R2 Multifrequency Compelled Signaling (R2MFC) Calling Number Identification (CNI)/Call Detail Recording (CDR) Enhancements feature provides the following capabilities across an R2MFC/ISDN gateway:

- The mapping of the R2MFC CNI to the ISDN CLID, and vice versa
- The location of the captured CNI in the CDR is an option to a customer. The CNI can appear in the digits field, the CLID field in line two, or not appear at all in the CDR.
- The CNI is provided to the ACD MAX, Network ACD, and Radio Paging equipment, similar to how the CLID is provided.

Examples of CDR formats

The following examples provide cases of the CNI (23008) appearing in the digits field, in the CLID field in line two, and not appearing at all in the CDR.

Table 104: Example 5 CDR record with CNI in digits field

```
N  003 00  T078001 T008001  31/05  1:40:05   05:30.5   C23008
&                  0000  0000
```

Table 105: Example 6 CDR record with CNI in CLID field

```
N  003 00  T078001 T008001  31/05  13:40:05   0:05:30.5   71082317
&23008xxxxxxxxxxx 0000  0000
```

Table 106: Example 7 CDR record with no CNI appearance

```
N  003 00  T078001 T008001  31/05  13:40:05   0:05:30.5   71082317
&                  0000  0000
```

Operating parameters

This feature is applicable to Large and Small systems.

The maximum length of the CLID field in the CDR is 16 digits.

This feature applies to all supported ISDN interfaces.

On the ISDN side of the R2MFC/ISDN gateway, the ISDN access may be through ISDN Primary Rate Interface (PRI), ISDN Signaling Link (ISL), Virtual Network Services (VNS) or Basic Rate Interface (BRI) trunks.

This feature does not affect the manner in which the CNI is composed at the originating switch of an R2MFC/ISDN gateway.

If the CNI cannot be composed at an R2MFC/ISDN gateway tandem switch, the CNI DN and the Trunk ID are sent in the CNI.

Feature interactions

Calling Party Privacy

If the CLID is received with presentation denied, it is not mapped to the CNI. Instead, the CNI is composed of the CNI DN and the Trunk ID. Optionally, the CNI request can be ECNI (the CNI End-of-CNI R2MFC level 1 forward signal).

Display Calling Party Denied

If the CLID is received with Display Calling Party Denied, it is not mapped to the CNI. Instead, the CNI is composed of the CNI DN and the Trunk ID. Optionally, the CNI request can be ECNI (the CNI End-of-CNI R2MFC level 1 forward signal).

EuroISDN Continuation

The outgoing CLID element of the EuroISDN Continuation feature is mutually exclusive with the R2MFC CNI/CDR Enhancements feature. If the CLID is to be composed from the EuroISDN Continuation feature, it does not contain the CNI. If the CLID is to be composed from the CNI, no prefixes are added to the number.

Feature Group D

Feature Group D trunks do not support CNI. If a CNI is available, in addition to the CLID on a Feature Group D trunk, the CLID of the Feature Group D trunk is used for the CLID.

In-Band Automatic Number Identification (IANI)

Inband ANI trunks do not support CNI. If a CNI is available, in addition to the IANI on an IANI trunk, the IANI is used for the CLID.

Incoming Trunk Programmable CLID

Incoming Trunk Programmable CLID takes precedence over the R2MFC CNI/CDR Enhancements feature. If the outgoing ISDN trunk is allowed to send a billing number, the billing number is sent out as the CLID, not the CNI from the incoming trunk.

M911

M911 trunks do not support CNI. If a CNI is available on an M911 trunk, in addition to the ANI, the ANI is used for the CLID.

R2MFC to DPNSS1 Gateway

The R2MFC CNI/CDR Enhancements feature uses the CNI request enhancement (Upfront CNI) developed for the R2MFC to DPNSS1 Gateway feature.

Feature packaging

For the CNI/CLID tandem enhancement, the following software packages are required:

- Multifrequency Compelled Signaling (MFC) package 128
- Integrated Services Digital Network (ISDN) package 145
- 1.5 Mbps Primary Rate Access (PRA) package 146; or ISDN Signaling Link (ISL) package 147; or 2.0 Mbps Primary Rate Access (PRI2) package 154; or Virtual Network Services (VNS) package 183; or Basic Rate Interface Trunk Access (BRIT) package 233; which requires Basic Rate Interface (BRI) package 216
- For EuroISDN applications, EuroISDN (EUROISDN) package 261
- For QSIG applications, QSIG (QSIG) package 263

For the CDR enhancement, the following software packages are required:

- Call Detail Recording (CDR) package 4
- To print or store the CDR record, Call Detail Recording on Teletype Machine (CTY) package 5
- Calling Line Identification in Call Detail Recording (CCDR) package 118
- New Format Call Detail Recording (FCDR) package 234

Feature implementation

Task summary list

The following is a summary of the tasks in this section:

1. Table 107: LD 17 - Configure the CDR system parameters. on page 108
2. Table 108: LD 15 - Configure the CDR field (if any) in which the CNI will appear for the customer group. on page 109
3. Table 109: LD 15 - Configure the CNI presentation option for the customer group. on page 109
4. Table 110: LD 16 - Configure the CDR option to provide CDR records for calls on the trunk route. on page 110
5. Table 111: LD 16 - Configure the CLID/CNI request options for an R2MFC trunk route (incoming). on page 110
6. Table 112: LD 16 - Configure the CLID/CNI request options for an R2MFC trunk route (outgoing). on page 112
7. Table 113: LD 16 - Configure the CLID/CNI request options for an R2MFC trunk route (incoming and outgoing). on page 113
8. Table 114: LD 16 - Configure the CLID/CNI request options for an ISDN trunk route (incoming). on page 115
9. Table 115: LD 16 - Configure the CLID/CNI request options for an ISDN trunk route (outgoing). on page 117
10. Table 116: LD 16 - Configure the CLID/CNI request options for an ISDN trunk route (incoming and outgoing). on page 119
11. Table 117: LD 16 - Configure the CLID/CNI request options for an R2MFC route (incoming and outgoing) with signaling that is supported by a D-channel (ISL). on page 121

Table 107: LD 17 - Configure the CDR system parameters.

Prompt	Response	Description
REQ	CHG	Change existing data.
TYPE	PARM	System Parameters
...		
- FCDR	NEW	New format for Call Detail Recording
...		

Prompt	Response	Description
- CLID	YES	Calling Line ID in the CDR
...		

Table 108: LD 15 - Configure the CDR field (if any) in which the CNI will appear for the customer group.

Prompt	Response	Description
REQ	CHG	Change existing data.
TYPE	CDR	Call Detail Recording
CUST		Customer number
	0-99	Range for Large System, Call Server 1000E, and Media Gateway 1000E
	0-31	Range for Small System
...		
- PORT	0-15	CDR port
- CNI		The CDR field (if any) in which the CNI will appear.
	(DGTS) CLID NONE	The CNI is recorded in the digits field (default). The CNI is recorded in the CLID field. The CNI is not captured in the CDR.

Table 109: LD 15 - Configure the CNI presentation option for the customer group.

Prompt	Response	Description
REQ	CHG	Change existing data.
TYPE	NET	Networking data
CUST		Customer number
	0-99	Range for Large System, Call Server 1000E, and Media Gateway 1000E
	0-31	Range for Small System
ISDN	YES	Integrated Services Digital Network (ISDN)
...		
- CNDN	0-99999999	Customer CNI DN on outgoing MFC calls (maximum length is eight digits.)
- CNIP	(YES) NO	Option to send CNI when CLID has presentation denied. YES = Send the CNI DN and the Trunk ID. NO = Do not send a CNI.

Table 110: LD 16 - Configure the CDR option to provide CDR records for calls on the trunk route.

Prompt	Response	Description
REQ	CHG	Change the existing data.
TYPE	RDB	Route Data Block
CUST	xx	Customer number as defined in LD 15.
ROUT		Route number
	0-511	Range for Large System, Call Server 1000E, and Media Gateway 1000E
	0-127	Range for Small System
TKTP		Trunk route type.
	DID	Direct Inward Dialing Trunk.
	TIE	TIE trunk.
...		
CDR	YES	Call Detail Recording.
- INC	YES	CDR on incoming calls.
...		
- OAL	YES	CDR on outgoing calls.

Table 111: LD 16 - Configure the CLID/CNI request options for an R2MFC trunk route (incoming).

Prompt	Response	Description
REQ	CHG	Change existing data.
TYPE	RDB	Route Data Block.
CUST	xx	Customer number as defined in LD 15.
ROUT		Route number
	0-511	Range for Large System, Call Server 1000E, and Media Gateway 1000E
	0-127	Range for Small System
TKTP		Trunk route type.
	DID	Direct Inward Dialing Trunk.
	TIE	TIE trunk.
...		
ICOG	ICT	Incoming trunk route

Prompt	Response	Description
...		
MFC	YES	MFC.
MFCI	1-127	MFC Incoming table number; must be a nonzero value.
...		
ICIS		Incoming Identifier that is sent. Prompted for incoming trunks (that is, if ICOG = ICT), and if the route type is R2MFC or ISDN.
	YES	YES = The default. Use the CLID/CNI from the incoming ISDN/R2MFC trunk.
ICNP		Incoming Numbering Plan. Prompted if the route type is R2MFC and ICIS = YES.
	(UKWN)	Unknown.
	PRV	Private.
	PUB	Public.
ICNT		Incoming Numbering Type. Prompted if the route type is R2MFC and ICIS = YES.
	(UKWN)	Unknown Number.
	INTL	International Number.
	NTN	National Number.
	LCL	Local Number.
	LOC	Location Number.
	CDP	Coordinated Dialing Plan.
	SPN	Special Number.
ICPS		Incoming Presentation Status. Prompted if the route type is R2MFC and ICIS = YES.
	YES	YES = Indicate the presentation status of the CLID.
...		
NCNI	(0)-7	Request CNI after the defined number of digits are received. If NCNI = 0 (the default), the CNI request does not depend on the number of digits received. If the value for NCNI is defined to be greater than the accepted number of digits required for routing the call, CNI will not be requested but the call is routed. The NCNI prompt is requested if the trunk type is DID or TIE, the MFC signaling is R2MFC, and the MFC signaling table is defined on the route.

Prompt	Response	Description
CNIE	(NO) YES	Request CNI after an ESN code is dialed. If the value of NCNI has been defined as greater than zero (in response to the NCNI prompt) and CNIE is set to YES, CNI is requested when either one of the conditions is met. The CNIE prompt is requested if the trunk type is DID or TIE, the MFC signaling is R2MFC, and the MFC signaling table is defined on the route.

Table 112: LD 16 - Configure the CLID/CNI request options for an R2MFC trunk route (outgoing).

Prompt	Response	Description
REQ	CHG	Change existing data.
TYPE	RDB	Route Data Block
CUST	xx	Customer number as defined in LD 15.
ROUT		Route number
	0-511	Range for Large System, Call Server 1000E, and Media Gateway 1000E
	0-127	Range for Small System
TKTP		Trunk route type.
	DID	Direct Inward Dialing Trunk.
	TIE	TIE trunk.
...		
ICOG	OGT	Outgoing trunk route
...		
MFC	YES	MFC.
MFCO	1-127	MFC outgoing table number; must be a nonzero value.
...		
OGIS		Outgoing Identifier that is sent. Prompted for outgoing trunks (that is, if ICOG = OGT), and if the route trunk type is R2MFC or ISDN.
	YES	YES = The default. Use the CLID/CNI from the incoming ISDN/R2MFC trunk, or from the calling phone.
...		
NCNI	(0)-7	Request CNI after the defined number of digits are received.

Prompt	Response	Description
		If NCNI = 0, the CNI request does not depend on the number of digits received. If the value for NCNI is defined to be greater than the accepted number of digits required for routing the call, CNI is not requested but the call is routed. The NCNI prompt is requested if the trunk type is DID or TIE, the MFC signaling is R2MFC and the MFC signaling table is defined on the route.
CNIE	(NO) YES	Request CNI after an ESN code is dialed. If the value of NCNI has been defined as greater than zero (in response to the NCNI prompt) and CNIE is set to YES, CNI is requested when either one of the conditions is met. The CNIE prompt is requested if the trunk type is DID or TIE, the MFC signaling is R2MFC and the MFC signaling table is defined on the route.
...		

Table 113: LD 16 - Configure the CLID/CNI request options for an R2MFC trunk route (incoming and outgoing).

Prompt	Response	Description
REQ	CHG	Change existing data.
TYPE	RDB	Route Data Block.
CUST	xx	Customer number as defined in LD 15.
ROUT		Route number
	0-511	Range for Large System, Call Server 1000E, and Media Gateway 1000E
	0-127	Range for Small System
TKTP		Trunk route type.
	DID	Direct Inward Dialing Trunk.
	TIE	TIE trunk.
...		
ICOG	IAO	Incoming and outgoing trunk route.
...		
MFC	YES	MFC.
MFCI	1-127	MFC Incoming table number; must be a nonzero value.
...		

Prompt	Response	Description
MFCO	1-127	MFC outgoing table number; must be a nonzero value.
...		
ICIS		Incoming Identifier that is sent. Prompted for incoming trunks (that is, if ICOG = ICT), and if the route type is R2MFC or ISDN.
	YES	YES = The default. Use the CLID/CNI from the incoming ISDN/R2MFC trunk.
ICNP		Incoming Numbering Plan. Prompted if the route type is R2MFC and ICIS = YES.
	(UKWN)	Unknown.
	PRV	Private.
	PUB	Public.
ICNT		Incoming Numbering Type. Prompted if the route type is R2MFC and ICIS = YES.
	(UKWN)	Unknown Number.
	INTL	International Number.
	NTN	National Number.
	LCL	Local Number.
	LOC	Location Number.
	CDP	Coordinated Dialing Plan.
	SPN	Special Number.
ICPS		Incoming Presentation Status. Prompted if the route type is R2MFC and ICIS = YES.
	YES	YES = Indicate the presentation status of the CLID.
OGIS		Outgoing Identifier that is sent. Prompted for outgoing trunks (that is, if ICOG = OGT), and if the route type is R2MFC or ISDN.
	YES	YES = The default. Use the CLID/CNI from the incoming ISDN/R2MFC trunk, or from the calling phone.
...		
NCNI	(0)-7	Request CNI after the defined number of digits are received. If NCNI = 0 (the default), the CNI request does not depend on the number of digits received. If the value for NCNI is defined to be greater than the accepted number of digits required for routing the call, CNI is not requested but the call is routed.

Prompt	Response	Description
		The NCNI prompt is requested if the trunk type is DID or TIE, the MFC signaling is R2MFC, and the MFC signaling table is defined on the route.
CNIE	(NO) YES	Request CNI after an ESN code is dialed. If the value of NCNI has been defined as greater than zero (in response to the NCNI prompt) and CNIE is set to YES, CNI is requested when either one of the conditions is met. The CNIE prompt is requested if the trunk type is DID or TIE, the MFC signaling is R2MFC, and the MFC signaling table is defined on the route.

Table 114: LD 16 - Configure the CLID/CNI request options for an ISDN trunk route (incoming).

Prompt	Response	Description
REQ	CHG	Change existing data.
TYPE	RDB	Route Data Block
CUST	xx	Customer number as defined in LD 15.
ROUT		Route number
	0-511	Range for Large System, Call Server 1000E, and Media Gateway 1000E
	0-127	Range for Small System
TKTP		Trunk route type
	DID	Direct Inward Dialing trunk
	TIE	TIE trunk
...		
ISDN	YES	ISDN
- MODE	PRA	ISDN Primary Rate Access mode of operation
...		
- IFC		Interface type.
	APAC	Asia Pacific.
	AXEA	Ericsson AXE-10 for Australia.
	AXES	Ericsson AXE-10 for Sweden.
	D70	Japan D70.
	D100	Meridian DMS-100.
	D250	Meridian DMS-250.

Prompt	Response	Description
	ESIG	ETSI QSIG.
	ESS4	AT&T ESS#4.
	ESS5	AT&T ESS#5.
	EURO	EuroISDN.
	ISIG	ISO QSIG.
	NUME	Numeris for France.
	S100	Meridian SL-100.
	(SL1)	Meridian SL-1.
	SS12	SYS-12 for Norway.
	TCZ	NEAX-61 for New Zealand.
	1TR6	Germany 1TR6.
- - CNTY		Enter country pertaining to EuroISDN and Asia Pacific interface type (if IFC = EURO or APAC.)
	AUS	Austria
	AUST	Australia
	DEN	Denmark
	DUT	Holland
	EIR	Ireland
	(ETSI)	ETSI basic protocol
	FIN	Finland
	FRA	France
	GER	Germany
	HKNG	Hong Kong
	ITA	Italy
	NOR	Norway
	POR	Portugal
	SING	Singapore
	SWE	Sweden
	SWI	Switzerland
	TCNZ	New Zealand
	THAI	Thailand
...		

Prompt	Response	Description
ICOG	ICT	Incoming trunk route.
...		
ICIS		Incoming Identifier that is sent. Prompted for incoming trunks (that is, if ICOG = ICT), and if the route type is R2MFC or ISDN.
	YES	YES = The default. Use the CLID/CNI from the incoming ISDN/R2MFC trunk.
...		

Table 115: LD 16 - Configure the CLID/CNI request options for an ISDN trunk route (outgoing).

Prompt	Response	Description
REQ	CHG	Change existing data.
TYPE	RDB	Route Data Block.
CUST	xx	Customer number as defined in LD 15.
ROUT		Route number
	0-511	Range for Large System, Call Server 1000E, and Media Gateway 1000E
	0-127	Range for Small System
TKTP		Trunk route type
	DID	Direct Inward Dialing trunk
	TIE	TIE trunk
...		
ISDN	YES	ISDN.
- MODE	PRA	ISDN Primary Rate Access mode of operation.
...		
- IFC		Interface type.
	APAC	Asia Pacific.
	AXEA	Ericsson AXE-10 for Australia.
	AXES	Ericsson AXE-10 for Sweden.
	D70	Japan D70.
	D100	Meridian DMS-100.
	D250	Meridian DMS-250.

Prompt	Response	Description
	ESIG	ETSI QSIG.
	ESS4	AT&T ESS#4.
	ESS5	AT&T ESS#5.
	EURO	EuroISDN.
	ISIG	ISO QSIG.
	NUME	Numeris for France.
	S100	Meridian SL-100.
	(SL1)	Meridian SL-1.
	SS12	SYS-12 for Norway.
	TCZ	NEAX-61 for New Zealand.
	1TR6	Germany 1TR6.
- - CNTY		Enter country pertaining to EuroISDN and Asia Pacific interface type (if IFC = EURO or APAC.)
	AUS	Austria
	AUST	Australia
	DEN	Denmark
	DUT	Holland
	EIR	Ireland
	(ETSI)	ETSI basic protocol
	FIN	Finland
	FRA	France
	GER	Germany
	HKNG	Hong Kong
	ITA	Italy
	NOR	Norway
	POR	Portugal
	SING	Singapore
	SWE	Sweden
	SWI	Switzerland
	TCNZ	New Zealand
	THAI	Thailand
...		

Prompt	Response	Description
ICOG	OGT	Outgoing trunk route.
...		
OGIS		Outgoing Identifier that is sent. Prompted for outgoing trunks (that is, if ICOG = OGT), and if the route type is R2MFC or ISDN.
	YES	YES = The default. Use the CLID/CNI from the incoming ISDN/R2MFC trunk, or from the calling phone.
...		

Table 116: LD 16 - Configure the CLID/CNI request options for an ISDN trunk route (incoming and outgoing).

Prompt	Response	Description
REQ	CHG	Change existing data.
TYPE	RDB	Route Data Block
CUST	xx	Customer number as defined in LD 15.
ROUT		Route number
	0-511	Range for Large System, Call Server 1000E, and Media Gateway 1000E
	0-127	Range for Small System
TKTP		Trunk route type
	DID	Direct Inward Dialing trunk
	TIE	TIE trunk
...		
ISDN	YES	ISDN.
- MODE	PRA	ISDN Primary Rate Access mode of operation.
...		
- IFC		Interface type.
	APAC	Asia Pacific.
	AXEA	Ericsson AXE-10 for Australia.
	AXES	Ericsson AXE-10 for Sweden.
	D70	Japan D70.
	D100	Meridian DMS-100.
	D250	Meridian DMS-250.

Prompt	Response	Description
	ESIG	ETSI QSIG.
	ESS4	AT&T ESS#4.
	ESS5	AT&T ESS#5.
	EURO	EuroISDN.
	ISIG	ISO QSIG.
	NUME	Numeris for France.
	S100	Meridian SL-100.
	(SL1)	Meridian SL-1.
	SS12	SYS-12 for Norway.
	TCZ	NEAX-61 for New Zealand.
	1TR6	Germany 1TR6.
- - CNTY		Enter country pertaining to EuroISDN and Asia Pacific interface type (if IFC = EURO or APAC.)
	AUS	Austria
	AUST	Australia
	DEN	Denmark
	DUT	Holland
	EIR	Ireland
	(ETSI)	ETSI basic protocol
	FIN	Finland
	FRA	France
	GER	Germany
	HKNG	Hong Kong
	ITA	Italy
	NOR	Norway
	POR	Portugal
	SING	Singapore
	SWE	Sweden
	SWI	Switzerland
	TCNZ	New Zealand
	THAI	Thailand
...		

Prompt	Response	Description
ICOG	IAO	Incoming and outgoing trunk route.
...		
ICIS		Incoming Identifier that is sent. Prompted for incoming trunks (that is, if ICOG = ICT), and if the route type is R2MFC or ISDN.
	YES	YES = The default. Use the CLID/CNI from the incoming ISDN/R2MFC trunk.
OGIS		Outgoing Identifier that is sent. Prompted for outgoing trunks (that is, if ICOG = OGT), and if the route type is R2MFC or ISDN.
	YES	YES = The default. Use the CLID/CNI from the incoming ISDN/R2MFC trunk, or from the calling phone.
...		

Table 117: LD 16 - Configure the CLID/CNI request options for an R2MFC route (incoming and outgoing) with signaling that is supported by a D-channel (ISL).

Prompt	Response	Description
REQ	CHG	Change existing data.
TYPE	RDB	Route Data Block
CUST	xx	Customer number as defined in LD 15.
ROUT		Route number
	0-511	Range for Large System, Call Server 1000E, and Media Gateway 1000E
	0-127	Range for Small System
TKTP		Trunk route type
	DID	Direct Inward Dialing trunk
	TIE	TIE trunk
...		
ISDN	YES	ISDN
- MODE	ISLD	ISL mode of operation.
...		
- IFC		Interface type.
	APAC	Asia Pacific.
	AXEA	Ericsson AXE-10 for Australia.

Prompt	Response	Description
	AXES	Ericsson AXE-10 for Sweden.
	D70	Japan D70.
	D100	Meridian DMS-100.
	D250	Meridian DMS-250.
	ESIG	ETSI QSIG.
	ESS4	AT&T ESS#4.
	ESS5	AT&T ESS#5.
	EURO	EuroISDN.
	ISIG	ISO QSIG.
	NUME	Numeris for France.
	S100	Meridian SL-100.
	(SL1)	Meridian SL-1.
	SS12	SYS-12 for Norway.
	TCZ	NEAX-61 for New Zealand.
	1TR6	Germany 1TR6.
- - CNTY		Enter country pertaining to EuroISDN and Asia Pacific interface type (if IFC = EURO or APAC.)
	AUS	Austria
	AUST	Australia
	DEN	Denmark
	DUT	Holland
	EIR	Ireland
	(ETSI)	ETSI basic protocol
	FIN	Finland
	FRA	France
	GER	Germany
	HKNG	Hong Kong
	ITA	Italy
	NOR	Norway
	POR	Portugal
	SING	Singapore
	SWE	Sweden

Prompt	Response	Description
	SWI	Switzerland
	TCNZ	New Zealand
	THAI	Thailand
...		
ICOG	IAO	Incoming and outgoing trunk route.
...		
MFC	YES	MFC
MFCI	1-127	MFC Incoming table number; must be a nonzero value.
...		
MFCO	1-127	MFC outgoing table number; must be a nonzero value.
...		
ICIS		Incoming Identifier that is sent. Prompted for incoming trunks (that is, if ICOG = ICT), and if the route type is R2MFC or ISDN.
	YES	YES = The default. Use the CLID/CNI from the incoming ISDN/R2MFC trunk.
ICNP		Incoming Numbering Plan. Prompted if the route type is R2MFC and ICIS = YES.
	(UKWN)	Unknown
	PRV	Private
	PUB	Public
ICNT		Incoming Numbering Type. Prompted if the route type is R2MFC and ICIS = YES.
	(UKWN)	Unknown Number
	INTL	International Number
	NTN	National Number
	LCL	Local Number
	LOC	Location Number
	CDP	Coordinated Dialing Plan
	SPN	Special Number
ICPS		Incoming Presentation Status. Prompted if the route type is R2MFC and ICIS = YES.
	YES	YES = Indicate the presentation status of the CLID.

Prompt	Response	Description
OGIS		Outgoing Identifier that is sent. Prompted for outgoing trunks (that is, if ICOG = OGT), and if the route type is R2MFC or ISDN.
	YES	YES = The default. Use the CLID/CNI from the incoming ISDN/R2MFC trunk, or from the calling phone.

Feature operation

No specific operating procedures are required to use this feature.

Scheduled Access Restriction

This feature generates A (Authorization Code/Scheduled Access Restriction) call records whenever a Scheduled Access Restriction (SAR) Flexible Feature Code (FFC) is dialed and the SCDR prompt in LD 88 is set to YES.

Feature implementation

Table 118: LD 88 - Configure the Scheduled Access Restriction in CDR.

Prompt	Response	Description
REQ	CHG	Change existing data.
TYPE	SAR	Scheduled Access Restriction
CUST	xx	Customer number as defined in LD 15.
...		
SCDR	(NO) YES	Scheduled Access Restriction: Flexible Feature Codes in CDR

Stand-alone and network outgoing non-metered CDR Transfer Enhancement (CDRX)

When the stand-alone and network outgoing non-metered CDR Transfer Enhancement (CDRX) package 259 is not equipped, multiple call transfers for outgoing non-metered calls in

stand-alone and network environments generate an S (Start) record for the first transfer and an E (End) record when the last party disconnects.

When the CDRX package is equipped, a call transfer of an outgoing non-metered CO trunk in a stand-alone environment generates an S (Start) record when the originating party of the outgoing trunk call releases from the transfer, regardless of whether the transferred-to party has answered or not. This means that the ringing time is charged to the transferred-to party, which is different from the metered stand-alone operation.

If the party to which the call is transferred originates another call transfer, an X (Transfer) record is generated when the transfer is complete. This permits the entire second segment of the call to be charged to the new controlling DN. This rule applies to all succeeding call transfers until the last party disconnects. After final disconnection, an End record is generated.

During multiple call transfers, the Originating field of the S (Start), X (Transfer), and E (End) records is always the DN of the transferring or disconnecting party, and the Terminating field is always the outgoing CO trunk. The duration in each record shows the time segment from when the previous controller disconnects until the new controller disconnects. This capability is controlled through the CDRX prompt in LD 16.

Network non-metered CDR Transfer Enhancement is based on the existing Network Call Redirection feature. For network multiple call transfers involving non-metered outgoing CO trunks, CDR generates S (Start), (X) Transfer, and (E) End records similar to the stand-alone outgoing non-metered CO trunk. The Stand-alone and network outgoing non-metered CDR Transfer Enhancement requires the NEW CDR format to output the BLID (Billing Line I.D.) field.

A BLID is added to the third line of the N, S, X, and E records to indicate the remote billing party for a particular call segment.

Feature implementation

Table 119: LD 16 - Configure the Trunk route CDR for the CDR transfer Enhancement.

Prompt	Response	Description
REQ	CHG	Change existing data block.
TYPE	RDB	Route Data Block
CUST	xx	Customer number as defined in LD 15.
ROUT		Route number
	0-511	Range for Large System, Call Server 1000E, and Media Gateway 1000E
	0-127	Range for Small System
DES	x...x	Designator field for trunk (0-16 alphanumeric characters)
TKTP	a...a	Trunk Type

Prompt	Response	Description
...		
CDR	(NO) YES	Call Detail Recording
- CDRX	(NO) YES	CDR X records printed for multiple call transfers of non-metered outgoing trunks.

Station activity Call Detail Recording

The Station activity Call Detail Recording (SCDR) package 251 is an extension of the Internal Call Detail Recording (ICDR) functionality.

ICDR phones defined as Internal Call Detail Recording Allowed (ICDA) generate "L" records for internal connections. If a route with CDR set to NO either terminates on, or is accessed by, an ICDA phone, no "L" record is generated.

SCDR phones assigned a Call Detail Monitoring (CDMA) Class of Service output D records whenever a trunk is accessed by, or terminates on, the phone. The D record is output regardless of the CDR settings in the Route Data Block (LD 16). The Customer Data Block (LD 15), however, must have CDR allowed. SCDR uses the first line of the NEW CDR format to output its information.

Feature implementation

Task summary list

The following is a summary of the tasks in this section:

1. Table 120: LD 10 - Configure analog (500/2500-type) phones with Call Detail Monitoring Class of Service. on page 126
2. Table 121: LD 11 - Configure Meridian 1 proprietary phones with Call Detail Monitoring Class of Service. on page 127
3. Table 122: LD 27 - Configure Basic Rate Interface DSL with Call Detail Monitoring Class of Service. on page 127

Table 120: LD 10 - Configure analog (500/2500-type) phones with Call Detail Monitoring Class of Service.

Prompt	Response	Description
REQ	CHG	Change existing data.
TYPE	a...a	Phone type

Prompt	Response	Description
...		
CLS		Class of Service
	(CDMD) CDMA	Call Detail Monitoring (Denied) Allowed

Table 121: LD 11 - Configure Meridian 1 proprietary phones with Call Detail Monitoring Class of Service.

Prompt	Response	Description
REQ	CHG	Change existing data.
TYPE	a...a	Phone type
...		
CLS		Class of Service
	(CDMD) CDMA	Call Detail Monitoring (Denied) Allowed

Table 122: LD 27 - Configure Basic Rate Interface DSL with Call Detail Monitoring Class of Service.

Prompt	Response	Description
REQ	CHG	Change existing data.
TYPE	DSL	Digital Subscriber Loop
DSL	l s c dsl	Digital Subscriber Loop address
...		
CLS		Class of Service
	(CDMD) CDMA	Call Detail Monitoring (Denied) Allowed

Terminating Carriage Control

This feature provides a carriage return option to signal a computer that a CDR message is complete. An additional carriage return precedes every CDR record. A single CDR record consists of a carriage return, a line of data, and another carriage return, and results in every other record being a null record. This option is implemented through service change and, when implemented, applies to all CDR TTY ports in the system.

Feature implementation

Table 123: LD 15 - Configure the Terminating Carriage Control feature.

Prompt	Response	Description
REQ	CHG	Change existing data block
TYPE	CDR	Call Detail Recording
CUST		Customer number
	0-99	Range for Large System, Call Server 1000E, and Media Gateway 1000E
	0-31	Range for Small System
CDR	(NO) YES	Change Call Detail Recording data
...		
TRCR	(NO) YES	Carriage Return sent after each CDR message

Chapter 5: Administration

Contents

This section contains information on the following topics:

Introduction on page 129

Feature implementation on page 129

Establishing baud rates on page 140

Introduction

This section explains how to configure various Call Detail Recording (CDR) features and options.

Feature implementation

Task summary list

The following is a summary of the tasks in this section:

1. Table 124: LD 17 - Configure CDR in the Configuration Record. on page 130
2. Table 125: LD 15 - Configure CDR in the Customer Data Block. on page 131
3. Table 126: LD 16 - Configure CDR in the Route Data Block. on page 132
4. Table 127: LD 10 - Configure CDR for the analog (500/2500-type) phones. on page 137
5. Table 128: LD 11 - Configure CDR for Meridian 1 proprietary phones. on page 137

6. Table 129: LD 12 - Configure CDR for attendant consoles. on page 138
7. Table 130: LD 14 - Configure CDR in the Trunk Data Block. on page 138
8. Table 131: LD 19 - Configure CDR for FGD ANI in the Code Restriction Data Block. on page 139
9. Table 132: LD 27 - Configure CDR in the ISDN Basic Rate Interface (BRI) Data Block. on page 139
10. Table 133: LD 88 - Configure CDR in the Authorization Code Data Block. on page 140

Table 124: LD 17 - Configure CDR in the Configuration Record.

Prompt	Response	Description
...		
ADAN	NEW TTY x	Configure new port (where: x is the port number).
	CHG TTY x	Change existing port (where: x is the port number).
...		
- USER	CTY	Enter CTY if port is to be a CDR Teletype port.
...		
PARM	YES	Parameters
...		
- FCDR		Format CDR
	(OLD)	Enter OLD if old CDR format is required.
	NEW	Enter NEW if New Format CDR is required.
		FCDR is prompted if FCDR package 234 equipped.
- PCDR		Priority for CDR
	(NO)	No priority for CDR
	YES	Priority for CDR When PCDR = YES, the call processing capabilities of the system can degrade. PCDR = YES allows CDR to take precedence over Call Processing when Call Registers are assigned.
- DUR5		Half-second Duration
	(NO)	Use two-second accuracy.
	YES	Use half-second accuracy.
		Prompted if JPN package 97 is equipped.
...		

Prompt	Response	Description
- MTRO		Metering Option
	(MR)	Enter MR for non-Periodic Pulse Metering and non-Advice of Charge environments.
	PPM	Enter PPM for Periodic Pulse Metering and Advice of Charge environments
...		
CLID		Calling Line ID
	(NO)	Calling Line ID not included in CDR records
	YES	Calling Line ID included in CDR records

Table 125: LD 15 - Configure CDR in the Customer Data Block.

Prompt	Response	Description
...		
OPT		Options for the specified customer
	(TTAD)	Time to Answer information and Abandoned call records Denied (default).
	TTAA	Time to Answer information and Abandoned call records Allowed
...		
CDR		Call Detail Recording
	(NO)	Do not modify CDR options for the specified customer.
	YES	Modify CDR options for the specified customer.
IMPH		Incoming Meridian 1 Packet Handler CDR
	(NO)	Do not print CDR records for incoming packet data calls.
	YES	Print CDR records for incoming packet data calls.
OMPH		Outgoing Meridian 1 Packet Handler CDR
	(NO)	Do not print CDR records for outgoing packet data calls.
	YES	Print CDR records for outgoing packet data calls
AXID		Auxiliary Identification
	(NO)	No Auxiliary Identification in CDR records
	YES	Auxiliary Identification in CDR records
TRCR		Terminating Carriage Return
	(NO)	No Carriage Return after records on CTY

Prompt	Response	Description
	YES	Carriage Return after records on CTY
CDPR		Coordinated Dialing Plan (CDP) CDR Enhancement
	(NO)	Replace Distant Steering Code (DSC) or Trunk Steering Code (TSC) with trunk route Access Code (ACOD)
	YES	Insert ACOD ahead of Distant Steering Code (DSC) or Trunk Steering Code (TSC)
ECDR		End-to-End Signaling digits in CDR record
	(NO)	Do not include End-to-End Signaling digits in CDR.
	YES	Include End-to-End Signaling digits in CDR.
OTCR		Original Trunk CDR Required
	(NO)	Use CDR options of the trunk route the call stepped to
	YES	Use CDR options of route call stepped from
		OTCR specifies which trunk route's CDR options to use when a call steps to, or from another route
PORT		CDR port
	0-15	Enter port number(s) to use for the specified customer
		Enter a carriage return <cr> by itself to stop the prompting of PORT.
PCDL		PPM and Advice of Charge (AOC) output on CDR Data Link
	(NO)	No PPM (AOC) information output on CDR Data Link
	YES	PPM (AOC) information output on CDR Data Link
UCST		Unit Cost per Periodic Pulse Metering pulse or Advice of Charge (AOC) unit
	0 -9999	Enter the Unit Cost of each PPM pulse or AOC unit. 0 disables the feature.

Table 126: LD 16 - Configure CDR in the Route Data Block.

Prompt	Response	Description
...		
AUTO	YES	Auto Terminate
...		
- DNIS		Dialed Number Identification Service
	(NO)	DNIS not allowed on this route.
	YES	DNIS allowed on this route.

Prompt	Response	Description
- - NDGT		Number of DNIS Digits required on this route
	1-(4)-7	Enter the number of digits required on this route.
- - WDGT		Which DNIS Digits
	(L)	Enter L to output the last four (4) digits of the DNIS number in the Call Detail Record
	F	Enter F to output the first four (4) digits of the DNIS number in the Call Detail Record
		WDGT is prompted when NDGT is set to a value greater than four (4) and FCDR package 234 is not equipped, or FCDR is set to "OLD".
- - DCDR		DNIS in CDR
	(NO)	No DNIS number output in CDR
	YES	DNIS number output in CDR
...		
CNTL	(NO) YES	Changes to Controls or timers
- TIMR	aaa xxx	Trunk Timers
	EOD 1024	End of dial timer, non-digitone trunks. Enter this value to allow normal CDR operation.
	ODT 1024	End of dial timer, digitone trunks. Enter this value to allow normal CDR operation
....		
CDR		Call Detail Recording
	(NO)	No CDR output for the specified route
	YES	CDR output for the specified route
- INC		Incoming
	(NO)	No CDR output for incoming calls
	YES	CDR output for all incoming calls
- LAST		CDR record printing content option for redirected calls
	(NO)	The terminating ID field in the CDR record will contain the one before the last party.
	YES	The terminating ID field in the CDR record will contain the last party.
- TTA		Time to Answer
	(NO)	No Time to Answer information output

Prompt	Response	Description
	YES	Time to Answer information output
- ABAN		Abandoned call records
	(NO)	No Abandoned call records output
	YES	Abandoned call records output
- QREC		Q Record
	(NO)	No Initial connection (Q) record output for incoming calls
	YES	Initial connection (Q) record output for incoming calls
- OAL		Outgoing All
	(NO)	No CDR output for all outgoing calls
	YES	CDR output for all outgoing calls
		If Answer Supervision is defined for the trunk, CDR records will only be generated on call completion.
- - OTL		Outgoing Toll
	(NO)	No CDR output for all outgoing toll calls
	YES	CDR output for all outgoing toll calls
		OTL is prompted when OAL = NO and TKTP = CAM, COT, DID, FEX or WAT. If Answer Supervision is defined for the trunk, CDR records will only be generated on call completion.
- - AIA		Answered call Identification Allowed
	(NO)	Do not enable Answered call Identification Allowed
	YES	Enable Answered call Identification Allowed
		AIA is prompted when OAL = YES or OTL = YES. Answered calls are identified by an "A" as the first character in the ORIGID or TERID.
- - OAN		Outgoing Answered
	NO	CDR output for all outgoing calls
	YES	CDR output for answered outgoing calls only
		OAN is only prompted if OAL = YES or OTL = YES. This prompt applies to trunks with Answer Supervision (CLS = PSP, or SUPN = YES). If the Supplementary features (SUPP) package is equipped, the default is NO. If SUPP 131 is not equipped, the default is YES.
- - OPD		Outpulsed Digits

Prompt	Response	Description
	(YES)	Outpulsed digits output in CDR
	NO	Dialed digits output in CDR
		OPD is prompted when OTL = YES, OAL = YES, or OAN = YES. The system must be initialized for changes to the OPD settings to take effect.
- NDP		Number of Digits to Print
	INC 0-32	Output the first 0-32 digits
	EXC 0-32	Suppress the last 0-32 digits
		NDP defaults to output all digits.
- CDRX		Call Detail Recording X (Transfer) records for non-metered trunks
	(NO)	X (Transfer) records are not output for non-metered trunks.
	YES	X (Transfer) records are output for non-metered trunks.
- CDRY		Call Detail Recording Y (Public Network Feature Invocation) records
	(NO)	Call Detail Recording Y (Public Network Feature Invocation) records will not be output for this route.
	YES	Call Detail Recording Y (Public Network Feature Invocation) records will be output for this route.
OPA		Outgoing PPM Answer
	(YES)	Outgoing unsupervised trunks will be considered as answered when PPM pulses are received.
	NO	Outgoing unsupervised trunks will not be considered as answered when PPM pulses are received.
CCO		Call Charge Output option
	(NO)	CDR N (Normal) records with no CHGINFO will be printed.
	YES	CDR N (Normal) records with no CHGINFO will not be printed.
...		
IDOP		Identify Original Party
	(NO)	CDR outputs forwarding station as originator
	YES	CDR outputs forwarded (original) party as originator
		IDOP is prompted when CFWR = NO

Prompt	Response	Description
...		
MR		Message Registration
	(NO)	The route is not metered.
	STAC	The AOC information is decoded at the start of the call.
	DURC	The AOC information is decoded during and at the end of the call.
	ENDC	The AOC information is decoded at the end of the call.
	PPM	Buffered Periodic Pulse Metering signals to be counted on this route.
	RVB	Reverse battery signal from PSTN/CO interpreted as supervisory signal and used as MR on this route.
	XLD	M&MM Lead non-buffered is used on this route.
...		
RUCS		Route Unit Cost per PPM pulse or AOC unit
	0-9999	Enter the Unit Cost of each PPM pulse or AOC unit. An entry of 0 disables the feature. The default is the value entered in LD 15 in response to the UCST prompt.
RURC	x y	Route Unit Reference Cost. The formula for Route Unit reference Cost is: $X * 10^{(-Y)}$, where: • x = 0-9999 • y = (0)-3 This gives a range from 001 to 9999. Call Charge scenarios: • When call charge is sent in currency: Displayed charge = (Received charge/RURC) * RUCS • When call charge is sent in AOC units: Displayed charge = (Received charge * RUCF) * RUCS units
RUCF		Route Unit Conversion Factor
	0-9999 0-3	
		Enter Route Unit Conversion Factor required. Applicable to AOC (MR = ENDC of MR = DURC) only Formula for Route Unit Conversion Factor is: $X*10_{(-Y)}$, where: • X = 0-9999 • Y = 0-3

Comments? infodev@avaya.com

Prompt	Response	Description
		This yields a conversion factor range of 0.001 to 9999. The default is 1 0, which results in a RUCS of 1.

Table 127: LD 10 - Configure CDR for the analog (500/2500-type) phones.

Prompt	Response	Description
...		
CLS		Class of Service options
	(ABDD)	Abandoned call record and Time to Answer Denied (default)
	ABDA	Abandoned call record and Time to Answer Allowed
	(CDMD)	Call Detail Monitoring Denied (Station activity Call Detail Recording) (default)
	CDMA	Call Detail Monitoring Allowed (Station activity Call Detail Recording)
	(ICDD)	Internal Call Detail Recording Denied (default)
	ICDA	Internal Call Detail Recording Allowed

Table 128: LD 11 - Configure CDR for Meridian 1 proprietary phones.

Prompt	Response	Description
...		
CLS		Class of Service options
	(ABDD)	Abandoned call record and Time to Answer Denied (default)
	ABDA	Abandoned call record and Time to Answer Allowed
	(CDMD)	Call Detail Monitoring Denied (Station activity Call Detail Recording) (default)
	CDMA	Call Detail Monitoring Allowed (Station activity Call Detail Recording)
	(ICDD)	Internal Call Detail Recording Denied (default)
	ICDA	Internal Call Detail Recording Allowed
KEY		Phone function key assignments
	xx CHG	Key number, Charge account
	xx CPN	Key number, Calling Party Number

Table 129: LD 12 - Configure CDR for attendant consoles.

Prompt	Response	Description
...		
ICDR		Internal CDR
	(ICDD)	Internal Call Detail Recording Denied (default)
	ICDA	Internal Call Detail Recording Allowed
ABAN		Abandoned call record
	(ABDD)	Abandoned call record and Time to Answer Denied (default)
	ABDA	Abandoned call record and Time to Answer Allowed
....		
KEY		Console function key assignments
	xx CHG	Key number, Charge account
	xx CPN	Key number, Calling Party Number

Table 130: LD 14 - Configure CDR in the Trunk Data Block.

Prompt	Response	Description
...		
CLS		Class Of Service options
	(CND)	Calling Number Identification Denied (default)
	CNA	Calling Number Identification Allowed. CNA requires an MFC Class of Service.
	(PIP)	Polarity Insensitive Pack (for QPC 330 and QPC 331 cards) (default)
	PSP	Polarity Sensitive Pack (for QPC 218, QPC 219 and QPC 295 cards)
	BST	Battery Supervised (SIGL = LOP is required)
	(XBAT)	Battery Supervised COT denied (default)
	BAT	Battery Supervised COT allowed
		Must have TYPE = COT, XTRK = XCOT, SIGL = LOP and international XFCOT trunk card.

Table 131: LD 19 - Configure CDR for FGD ANI in the Code Restriction Data Block.

Prompt	Response	Description
...		
CDAN		CDR to include Automatic Number Identification.
	(NO)	No ANI information output in CDR records (default)
	YES	ANI information output in CDR records

Table 132: LD 27 - Configure CDR in the ISDN Basic Rate Interface (BRI) Data Block.

Prompt	Response	Description
...		
TYPE	DSL	Digital Subscriber Loop
...		
CLS		Class Of Service options
	(ABDD)	Abandoned call record and Time to Answer Denied (default)
	ABDA	Abandoned call record and Time to Answer Allowed
	(CDMD)	Call Detail Monitoring Denied (Default) (Station activity Call Detail Recording) (default)
	CDMA	Call Detail Monitoring Denied Allowed (Station activity Call Detail Recording)
	(ICDD)	Internal Call Detail Recording Denied (default)
	ICDA	Internal Call Detail Recording Allowed
...		
TYPE	TSP	Terminal Service Profile
...		
CDR		Internal CDR
	(NO)	Do not print Internal CDR records packet data calls (default)
	YES	Print Internal CDR records for packet data calls.

Table 133: LD 88 - Configure CDR in the Authorization Code Data Block.

Prompt	Response	Description
...		
ACDR		Authorization codes in CDR. The ACDR prompt has no default.
	NO	No authorization codes output in CDR
	YES	Authorization codes output in CDR
SCDR		Scheduled Access Restriction Flexible Feature Codes in CDR. The SCDR prompt has no default.
	NO	No Scheduled Access Restriction Flexible Feature Codes output in CDR
	YES	Scheduled Access Restriction Flexible Feature Codes output in CDR

Establishing baud rates

A CDR record typically has one 80-character line (two if Multi-Tenant Service, CLID, or Feature Group D ANI is involved) and an average length of 100 bytes when the OLD CDR format is selected.

When the NEW CDR format is selected, an 86-character first line is output, followed by an 85-character second line and a 42-character third line. If the Time to Answer feature is active, a third 13-character line is output.

A system with CDR can run out of call registers (CRs) for call processing if the SDI interface transmission rate is less than that of the CDR record generation. The SDI baud rate must be high enough that records do not accumulate in the system output buffer, causing a shortage of call registers.

The Average Busy Season Busy Hour (ABSBH) traffic data provides a starting point for calculating the required capacity. The capacity includes a 30% reserve to accommodate traffic peaks.

Table 134: CDR data rate and system call capacity: record length 100 characters on page 141 and Table 135: CDR data rate and system call capacity: record length 160 characters on page 141 show the relationship between baud rate and the number of CDR calls per hour for two different record lengths: 100 characters (an average record) and 160 characters (the maximum length) respectively. The tables rely on the following calculations:

SDI port baud rate * 0.70 / record length = records that can be transmitted per second

Records transmitted per second * 60 * 60 = CDR hourly call capacity.

Table 134: CDR data rate and system call capacity: record length 100 characters on page 141 and Table 135: CDR data rate and system call capacity: record length 160 characters on page 141, which apply to all system CPUs, assume that each call uses one call per record. Table 135: CDR data rate and system call capacity: record length 160 characters on page 141 shows the worst-case scenario, with each record at the maximum 160-character length. For other record lengths, interpolate between the two tables.

Table 134: CDR data rate and system call capacity: record length 100 characters

Baud Rate	300	1200	2400	4800	9600
CDR calls per hour	1035	4140	8280	16560	33120

Table 135: CDR data rate and system call capacity: record length 160 characters

Baud Rate	300	1200	2400	4800	9600
CDR calls per hour	649	2,596	5,192	10,384	20,768

The table data ignores potential system limitations such as real time or traffic constraints that need to be engineered separately.

Only calls generating CDR records must be included in capacity estimations. For example, some systems keep CDR records only for outgoing calls. Exclude calls that do not generate records from the capacity calculations.

Chapter 6: Call record fields

Contents

This section contains information on the following topics:

Introduction on page 143

TTY record fields on page 145

Introduction

This chapter describes each call record field and defines its format. Table 136: Field Descriptions on page 143 lists each field and the page on which it is described. Table 137: Field to Record Matrix on page 144 relates record types to record fields and graphically indicates which fields apply to each record type.

Table 136: Field Descriptions

Field	Definition
RECTYPE	RECTYPE: Record Type on page 145
RECNO	RECNO: Record Number on page 146
CUSTNO	CUSTNO: Customer Number on page 146
ORIGID	ORIGID: Originator Identification on page 147
TERID	TERID: Terminator Identification on page 148
TIMESTAMP	TIMESTAMP: Time stamp on page 149
DURATION	DURATION: Call Duration on page 151
INPACK	INPACK: Incoming packet count on page 160
OUTPACK	OUTPACK: Outgoing packet count on page 161
DIGITTYPE	DIGITYPE: Digit Type Identifier on page 152
DIGITS	DIGITS: Digits on page 153
CLID	CLID: Calling Line Identification on page 157

Field	Definition
CHGINFO	CHGINFO: Charge Information on page 156
CALLCHG	CALLCHG: Call Charge on page 157
FGDANI	FGDANI: Feature Group D Automatic Number Identification on page 158
DNIS	DNIS: Dialed Number Identification Service on page 159
ORIGAUXID	ORIGID: Originator Identification on page 147
TERMAUXID	TERMAUXID: Terminating Auxiliary Identification on page 149
ORIGTENO	ORIGTENO and TERTENO: Originating/Terminating Tenant Number on page 156
TERTENO	ORIGTENO and TERTENO: Originating/Terminating Tenant Number on page 156
TTA*	TTA: Time to Answer (TTY only) on page 159
BLID	BLID: Billing Line Identification (TTY only) on page 161
M911	M911: M911 Call Abandon on page 162
000	000: CDR 100 Hour Call on page 162
B	B: Busy Tone Identifier on page 163

Note:

In Table 137: Field to Record Matrix on page 144, if NEW CDR format is selected, all fields are output. If the field is blank, it is output as spaces.

Table 137: Field to Record Matrix

		RECORD TYPE																		
		A	B	C	D	E	F	G	H	I	L	M	N	P	Q	R	S	T	X	Y
FIELD	RECTYPE	I	I	I	I	I	I	I	I	I	I	I	I	I	I	I	I	I	I	I
	RECNO	I	I	I	I	I	I	I	I		I	I	I	I	I	I	I		I	I
	CUSTNO	I	I	I	I	I	I	I	I		I	I	I	I	I	I	I		I	I
	ORIGID	I	I	I	I	I	I	I	I		I	I	I	I	I	I	I		I	I
	TERID	I	I	I	I	I	I	I	I		I	I	I	I	I	I	I		I	I
	TIMESTAMP	I	I	I	I	I	I	I	I	I	I	I	I	I	I	I	I	I	I	I
	DURATION		I		I	I	I	I	I		I		I		I	I	I		I	I
	INPACK							I	I											
	OUTPACK							I	I											
	DIGITTYPE					I	I						I		I	I	I		I	

	RECORD TYPE																		
	A	B	C	D	E	F	G	H	I	L	M	N	P	Q	R	S	T	X	Y
DIGITS	I		I	I	I	I					I	I	I	I	I	I		I	I
CLID *	I		I		I	I				I	I	I	I	I	I	I		I	
CHGINFO *		I			I	I						I		I	I	I		I	
CALLCHG *		I			I	I						I		I	I	I		I	
FGDANI *		I			I							I				I		I	
DNIS *		I			I							I				I		I	
ORIGAUXID *	I	I	I		I	I				I	I	I	I	I	I	I		I	
TERMAUXID *	I	I	I		I	I				I	I	I	I	I	I	I		I	
ORIGTENO *	I	I	I		I	I				I	I	I	I	I	I	I		I	
TERTENO *	I	I	I		I	I				I	I	I	I	I	I	I		I	
TTA *		I			I	I				I		I		I	I	I		I	
BLID					I							I				I		I	
M911 *												I		I					
000 *		I		I	I	I	I	I		I		I		I	I	I		I	I

* Fields marked with an asterisk are optional.

TTY record fields

A call record on a TTY or printer contains the following fields.

RECTYPE: Record Type

The Record Type (RECTYPE) field indicates the type of call record. The field consists of a single letter identifying the type of record:

A	Authorization Code
B	Abandoned call
C	Charge
D	Station Activity
E	End

G	Internal Meridian 1 Packet Handler data call
H	External Meridian 1 Packet Handler data call
F	Connection (Conference connection)
I	Initialization
L	Internal call
M	Charge for Conference
N	Normal
P	Calling Party Number
Q	Connection (initial connection)
R	Connection (transfer connection)
S	Start
T	Time stamp
X	Transfer
Y	Public Network Feature Invocation

See the chapter titled Call record types on page 183 for a full description of each record type.

RECNO: Record Number

The Record Number (RECNO) field identifies the number of the current record in the CDR sequence. The field is a three-character field that gives the record sequence number. It is right-justified for the OLD CDR format and left-justified for the NEW CDR format.

The RECNO field format is:

xxx

Where: xxx = Record Number (000-127)

CUSTNO: Customer Number

The Customer Number (CUSTNO) field identifies the customer associated with the call. The field is a two-character field that identifies the customer number.

The CUSTNO field format is:

xx

Where: xx = Customer Number (00-99)

ORIGID: Originator Identification

For all record types, except G and H, the Originator Identification (ORIGID) field identifies the apparatus that originated the call. The field output format depends on the type of equipment as follows:

1. Stations are identified in the form DNxxxx, where xxxx = prime DN for the phone.
2. When the CDRE package is equipped, the format DNxxxx is replaced by xxxxxxx to accommodate up to 7 digits.
3. Trunks have the ORIGID field in the format Trrrmmm, where rrr = route number and mmm = member number. For ISA calls, rrr = the service route number and mmm = the master route member number.
4. Attendants are identified in the form ATTNxx, where xx = the console number (1-63).
5. Conference loops are identified in the form CFlllnn, where lll = loop number 0-159 and nn = the conference number.
6. Arrrmmm, Trrrmmm or TNxxxx

   Where:

   - A = Answer Supervision was received on an answer supervised trunk output (if AIA = YES in LD 16)
   - T = Option AIA was set to NO in LD 16, or the terminator was an unsupervised trunk, or the terminator was a supervised trunk and the call was not answered.
   - rrr = route number (000-511). For Integrated Service Access (ISA) calls, rrr = the service route number.
   - mmm = member number (000-254). For ISA calls, mmm = the master route member number.
   - TN = packed Terminal Number. The TN format is xxxx, where: x = 0-9, A,B,C,D,E, or F

The Answer Supervision record is identified by an "A" in the ORGID field of the TTY output.

If trunks are equipped with Answer Supervision but no Answer Supervision is received during the call, the duration of the call is calculated from the time of trunk seizure. This type of record is still identified by a "T" in the ORIGID field of the TTY output.

For the G and H record types, the ORIGID is a 14 character-wide, left justified field. The ORIGID field is located on the first line and occupies positions 10 to 23. Its contents are:

- The Data Network Address (DNA) for internal or external outgoing calls, or
- The TN of the incoming link, either Meridian Communications Unit (MCU) or Primary Rate Interface (PRI) for external incoming calls.

TERID: Terminator Identification

For all record types, except the G and H records, the Terminating Identification (TERID) field identifies the apparatus on which a call is terminated. The field output format depends on the type of equipment as follows:

1. Stations are identified in the form DNxxxx, where xxxx = the prime DN for the phone.
2. When the CDRE package is equipped, the format DNxxxx is replaced by xxxxxxx to accommodate up to 7 digits.
3. Trunks have the ORIGID field in the format Trrrmmm, where rrr = route number and mmm = member number.
4. Attendants are identified in the form ATTNxx, where xx = the console number (1-63).
5. Conference loops are identified in the form CFlllnn, where lll = loop number 0-159 and nn = conference number.
6. rrrmmm, Trrrmmm or TNxxxx

   Where:

   - A = Answer Supervision was received on an Answer Supervised trunk output (if AIA = YES in LD 16)
   - T = Option AIA was set to NO in LD 16, or the terminator was an unsupervised trunk, or the terminator was a supervised trunk, and the call was not answered.
   - rrr = route number (000-511). For Integrated Service Access (ISA) calls, rrr = the service route number.
   - mmm = member number (000--510). For ISA calls, mmm represents the master route member number.
   - TN = packed Terminal Number. The TN format is xxxx, where: x = 0-9, A,B,C,D,E, or F.

The Answer Supervision record is identified by an "A" in the TERID field of the TTY output.

Comments? infodev@avaya.com

If Answer Supervision is not received during the call, although the trunks are equipped with Answer Supervision, the duration of the call is calculated from the time of trunk seizure. This type of record is still identified by a "T" in the TERID field of the TTY output.

For the G and H record types, the TERID is a 14-character wide, left justified field. It is located on the first line and occupies positions 25 to 38. Its contents are:

- The Data Network Address (DNA) for internal or external incoming calls, or
- The TN of the incoming link, either Meridian Communications Unit (MCU) or Primary Rate Interface (PRI) for external outgoing calls.

AUXID: Auxiliary Identification

The Auxiliary Identification (AUXID) field identifies the TN of the originating phone when the phone has a multiple appearance Prime DN, and cannot be uniquely identified by ORIGID. This field is output in the OLD CDR format and is used as the originating auxiliary identification field for L (Internal) records. Whether the AUXID is to be printed or not is determined by the response to the AXID prompt in LD 15.

The field format is:

LLL.S.CC.UU

Where:

LLL = Loop (000-255) S = Shelf (0-3) CC = Card (00-15) UU = Unit (00-31)

TERMAUXID: Terminating Auxiliary Identification

The Terminating Auxiliary Identification (TERMAUXID) field identifies the TN of the terminating phone when the phone has a multiple appearance Prime DN, and cannot be uniquely identified by TERID. This field is output in the OLD CDR format and is used as the terminating auxiliary identification field for L (Internal) records. The TERMAUXID field format is the same as the AUXID field format.

TIMESTAMP: Time stamp

The Time stamp (TIMESTAMP) field gives the date and time. Its exact definition depends on the type of record:

Record Type	Timestamp
N (Normal)	start of call
L (Internal) without call modification	end of call

Record Type	Timestamp
L (Internal) with call modification	at completion of the call modification
S (Start)	start of call
E (End)	end of call
I (Initialization)	time of system initialization
T (Time stamp)	old or new time stamp
X (Transfer)	completion of transfer
F, Q, and R (Connection)	time of connection
H	start of call
G	start of call
D	end of call
Y	time of feature invocation attempt (second flash for "PSTN Three Party Conferencing)

If the call started on the last day of a month and stopped on the first day of the next month, the start day is shown as day 0 of the next month.

The Time stamp (TIMESTAMP) field format for the OLD CDR format is:

MO/DD HH:MI

Where:

MO = month (1-12) / = forward slash character DD = day (0-31) space character HH = hour (0-23) : = colon character MI = minute (0-59)

Note:

If the call started on the last day of a month and stopped on the first day of the next month, the start day is shown as day 0 of the next month.

The Time stamp (TIMESTAMP) field format for the NEW CDR format is:

MO/DD HH:MI:SS

where:

MO = month (1-12) / = forward slash character DD = day (0-31) space character HH = hour (0-23) : = colon character MI = minute (0-59) : = colon character SS = second (0-59)

DURATION: Call Duration

The call duration (DURATION) field, as the name implies, is used to output the duration of the call. The duration accuracy is dependent on whether the Japan Central Office trunks package 97 is equipped.

Note that the CDR 100-Hour Call feature increases the maximum recordable duration of a call from approximately 100 to 100,000 hours. To achieve this result, the CDR 100-Hour Call feature introduces a new "000" field in the third line of all FCDR record types which have a Duration field. See 000: CDR 100 Hour Call on page 162 for more information.

If the Japan Central Office trunks package 97 is equipped, DUR5 will be a sub-prompt of the PARM prompt in LD 17. If DUR5 = YES, the duration is calculated to within a half-second of the actual duration. If DUR5 = NO, or if the Japan Central Office trunks package (97) is not equipped, the duration is calculated to within two-seconds of the actual duration.

In a N (Normal) record, this is the duration of the call from start to disconnect. In a S (Start) record, this is the duration of the call from the start to the first feature usage at the time given by TIMESTAMP. Incoming call duration is measured from the time the call is first presented to the terminating phone. Outgoing call duration is measured from the time a trunk is first seized (dial tone removed), except for cases where records are only produced upon receipt of Answer Supervision where the call duration starts upon receipt of Answer Supervision.

In an E (End) record, the duration is the total time for the call less the duration of the first segment (which is given in the corresponding S [Start] record). The total call duration is the sum of the duration given in the S (Start) and E (End) records.

In an X (Transfer) record with CDR Transfer Enhancement (CDRX) active, the duration is included and is calculated dependant on the type of transfer. For internal transfers, the duration is calculated from the time the transferring party answered until the transferred-to party answers. For network transfers, the duration is calculated from the time the transferring party completes the transfer until the transferred-to party either disconnects or completes another transfer.

In a L (Internal) record, the duration of a simple call is measured from connection to release. With call modification, the duration is measured from the start of the call or call modification, to disconnect or another call modification.

On a route where trunks are equipped with Answer Supervision and supervision is received during the call, the duration of the call is calculated from the time Answer Supervision is received to the time of disconnect.

On a route where trunks are not equipped with Answer Supervision, the duration of the call is calculated from the time of seizure to the time of disconnect.

In a Y (Public Network Feature Invocation) record, the duration field indicates either the duration from the start of the original call, or the duration from the previous invocation attempt to the present invocation attempt.

The following is the Call Duration (DURATION) field format:

1. HH:MI:SS (when two-second accuracy call duration is in effect for OLD CDR format)

   Where: HH = hour (0-99), : = colon character, MI = minute (0-59), : = colon character, SS = second (0-59)

   Start records output using the OLD CDR format on TTY do not contain a DURATION field.

2. HH:MI:SS.S (when half-second accuracy call duration is in effect for OLD CDR format)

   Where: HH = hour (0-99), : = colon character, MI = minute (0-59), : = colon character, SS = second (0-9),. = period character, S = half-second duration indication (0 or 5)

   Start records output using the OLD CDR format on TTY do not contain a DURATION field.

3. HH:MI:SS.S (when either two- or half-second accuracy call duration is in effect for the NEW CDR format)

   Where: HH = hour (0-99), : = colon character, MI = minute (0-59), : = colon character, SS = second (0-59),. = period character, S = half-second duration indication (0 or 5)

   The Answer Supervision record is identified by an "A" in the ORIGID or TERID field of the CDR TTY output if the following conditions are met:

   - Trunk has Answer Supervision
   - Option to allow Answer Indication selected (AIA = YES in LD 16)

If Answer Supervision is not received during the call, although the trunks are equipped with Answer Supervision, the duration of the call is calculated from the time of trunk seizure. This type of record is still identified by a "T" in the ORIGID or TERID field of the CDR TTY output.

CDR Answer Supervision for Ground Start and Loop Start trunks detects Answer Supervision on Ground and Loop Start trunks when sent as reverse battery from the Central Office, and generates Call Detail Records based on the actual answer received rather than trunk seizure. Call Detail Recording begins when Answer Supervision is received from the CO.

Trunks connected to XUT cards can have LOOP Start Answer Supervision capability through the PSP class of service.

DIGITYPE: Digit Type Identifier

The Digits Type Identifier (DIGITYPE) is used to identify the BARS/NARS routing used by an outgoing call or to indicate that the DIGITS field is storing Multi-Frequency Compelled (MFC) Calling Number Information (CNI) digits for an incoming call.

Comments? infodev@avaya.com

The Digit Type Identifier (DIGITYPE) field is included in the DIGITS field in the NEW CDR format. The Digit Type Identifier (DIGITYPE) field is an independent field in the OLD CDR format.

The DIGITYPE format is: a

Where: a = one of the following:

- A = Automatic Route Selection used to route an outgoing call
- E = BARS/NARS Expensive route was used to route an outgoing call
- C = MFC Calling Number Information digits are stored for an incoming call

DIGITS: Digits

The Digits (DIGITS) field identifies the digits dialed, digits outpulsed, Charge Account code, received Multi-Frequency Compelled Calling Number Identification digits, Authorization Code entered, or Scheduled Access Restriction Flexible Feature Code entered.

Dictation and paging trunks

The CDR printout for dictation and paging trunks accessed by an analog (500/2500-type) phone specifies only the trunk access code in the DIGITS field. Dictation trunks require tones to instruct the machines at the far-end. The 2500-type phone sends these tones directly to the dictation trunk without using a call register to store digits. As these digits are not stored in a call register, the CDR cannot print them out.

With 500-type and Meridian 1 proprietary phones, the digits must be stored in a call register and then a Digitone Receiver (DTR) translates the digits into tones. Then, the CDR output shows all digits dialed by these phones.

Route Selection

The digits that appear in the Digits field of Normal or Start records depend on Route Selection as shown in the following:

RS-ANI: Digits shown are those that are actually outpulsed by the system after route selection and any required digit manipulation. The actual digits dialed are reflected only if no digit manipulation was required to process the call.

BARS, CDP: Digits shown are those that are dialed with the exception of the BARS access code or CDP steering code which are replaced with the trunk access code.

An enhancement to CDR for CDP provides the customer with the following options:

- The current method of replacing the Distant Steering Code (DSC) or Trunk Steering Code (TSC) with the trunk access code
- Insert the access code before the dialed digits so that no digits are removed from the CDR record.
  - NARS Digits shown are those that are actually dialed. If NARS and RS-ANI exist together, the RS-ANI format is used. If NARS and BARS exist together, the BARS format is used.
  - BARS/NARS with Outpulsed digits As an option, the digits shown can be the digits actually outpulsed by the system.

Outpulsed Digits

When the Outpulsed Digits (OPD) feature is enabled, the DIGITS field contains the digits actually outpulsed by the system. This only applies to Basic Alternate Route Selection (BARS), Network Alternate Route Selection (NARS), and Coordinated Dialing Plan (CDP) calls. If both the BARS and NARS packages are equipped, the CDR record follows the BARS format by default, and the ESN or ISDN access code (AC1 or AC2) is replaced by the trunk access code.

Note:

When OPD = YES in LD 16 and IFC = NI2 in LD 17, 011 is not included in the DIGITS field for international calls and 0 is not included in the DIGITS field for operator assisted calls. To see dialed digits in CDR output, OPD must be set to NO in LD 16.

Tables Table 138: BARS calls on page 154 to Table 140: All other NARS calls on page 155 show what will be placed in the DIGITS field of the CDR record. See also the N (Normal) record examples in this document.

Table 138: BARS calls

Digits dialed: ESN or ISDN Access Code + digits	
OPD option used	**Digits recorded in CDR**
OPD = NO	Trunk Access Code + the digits dialed after the ESN or ISDN Access Code. The ESN or ISDN Access Code is replaced by the Trunk Access Code.
OPD = YES	Trunk Access Code + the outpulsed digits.

Table 139: NARS calls

Digits dialed: ESN or ISDN Access Code + Location Code + extension	
OPD option used	**Digits recorded in CDR**
OPD = NO	Actual digits dialed
OPD = YES (the call stays in the ESN or ISDN network)	ESN or ISDN Access Code + Location Code + outpulsed digits
OPD = YES (the call overflows to the public network)	ESN or ISDN Access Code + Trunk Access Code + outpulsed digits

Table 140: All other NARS calls

Digits dialed: ESN or ISDN Access Code + digits	
OPD option used	**Digits recorded in CDR**
OPD = NO	Actual digits dialed
OPD = YES	ESN or ISDN Access Code + Trunk Access Code + outpulsed digits

Table 141: CDP calls with OPD and CDPR option

Digits dialed: ESN or ISDN Access Code + digits	
OPD option used	**Digits recorded in CDR**
OPD = NO CDPR = NO	ESN or ISDN Access Code
CDPR = YES	ESN or ISDN Access Code + Trunk Access Code
OPD = YES	ESN or ISDN Access Code + Trunk Access Code + outpulsed digits

In a Y (Public Network Feature Invocation) record, the digits field indicates the digits applying to the feature accessed (that is, for PSTN Three Party Conferencing, this field contains the third party number).

The Digits (DIGITS) field allows up to 32 digits to be recorded.

In the OLD CDR format, the field is 34 characters wide. This allows for the inclusion of the DIGITYPE identifier.

The OLD CDR format DIGITS field format is one of the following:

A xxxxxxxxxxxxxxxxxxxxxxxxxxxxxxxx

C xxxxxxxxxxxxxxxxxxxxxxxxxxxxxxxx

E xxxxxxxxxxxxxxxxxxxxxxxxxxxxxxxx

xxxxxxxxxxxxxxxxxxxxxxxxxxxxxxxx

Where:

- x = 0-9
- A = Automatic Route Selection used to route an outgoing call
- C = MFC Calling Number Information digits are stored for an incoming call
- E = BARS/NARS Expensive route was used to route an outgoing call

The NEW CDR format DIGITS field format is:

xxxxxxxxxxxxxxxxxxxxxxxxxxxxxxxx

Where: x = 0-9

All output is left justified and padded with blank characters if less than 32 digits. If more that 32 digits are dialed, only the first 16 are recorded correctly. Digit 33 and succeeding digits are cycled over digits 17 to 32.

When the International Supplementary Features (SUPP) package 131 is equipped, the number of digits to print is determined on a route-by-route basis. The number of digits to print is defined by the response to the Number of Digits to Print (NDP) prompt in LD 16.

ORIGTENO and TERTENO: Originating/Terminating Tenant Number

The Originating Tenant (ORIGTENO) field identifies the Tenant Number that is associated with the ORIGID field. The Terminating Tenant (TERTENO) field identifies the Tenant Number that is associated with the TERID field. When the Multi-Tenant Service (TENS) package 86 is equipped, CDR formats include the originating and terminating Tenant Numbers.

The ORIGTENO and TERTENO field format is: xxx

Where: xxx = Tenant Number (000-512)

CHGINFO: Charge Information

Charge Information is output for outgoing Periodic Pulse Metering (PPM) or Advice of Charge (AOC) Message Registration equipped trunks. The Charge Information (CHGINFO) field contains the following:

- Periodic Pulse count for PPM applications
- Charge Information — Information Element (IE) contents for AOC from a 1 TR 6
- AOC IE contents, for AOC from NUMERIS and SWISSNET

The CHGINFO field format is: xxxxx

Where: xxxxx = Charge Information (00000-32767)

CALLCHG: Call Charge

Call Charge is output for outgoing Periodic Pulse Metering (PPM) or Advice of Charge (AOC) Message Registration equipped trunks. The Call Charge (CALLCHG) field contains the call cost, or is used as a meter overflow indication on TTY output.

For PPM equipped routes, the call cost is determined using the following formula:

CALLCHG = CHGINFO * RUCS (as defined in LD 16)

For AOC equipped routes, the call cost is determined using the following formula:

CALLCHG = CHGINFO * RUCS (as defined in LD 16) * RUCF (as defined in LD 16)

The CALLCHG field format is: aaaaaa

Where: aaaaaa = one of the following:

- call cost (000000 to 999999)
- CHXOVF—indicates CALLCHG field overflowed, use CHGINFO field and Route Unit Cost (RUCS) for PPM or Route Unit Cost (RUCS) and Route Unit Conversion Factor (RUCF) for AOC to calculate cost
- OVF00—indicates terminal meter overflowed four times (terminal meter>262143)
- OVF01—indicates terminal meter overflowed once (terminal meter>32767)
- OVF02—indicates terminal meter overflowed twice (terminal meter>65535)
- OVF03—indicates terminal meter overflowed three times (terminal meter>131071)
- OVF99—indicates that AOC end of call (ENDC) sub-service is in effect. Output for S (Start) and X (Transfer) records. Charge information is output in the associated E (End) record.

CLID: Calling Line Identification

Calling Line Identification (CLID) is a feature provided with Integrated Services Digital Network (ISDN). Refer to *Avaya ISDN Primary Rate Interface Features Fundamentals, NN43001-569* for a description of all ISDN features.

When CLID is enabled (in LD 17), the calling party's number (if available), is included in the CDR call records. This gives customers information needed to charge back the calling party for services rendered in connection with an incoming or tandem call.

The CLID field format is: xxxxxxxxxxxxxxxx

Where: xxxxxxxxxxxxxxxx = CLID information; x = 0-9

This 16 character field is always output.

If the CLID is less than 16 digits then blank fields are padded with Xs (for example: 1234567XXXXXXXXX).

IANI: In-Band Automatic Number Identification

In-Band Automatic Number Identification (IANI) displays the ANI number of a call when it terminates on an ACD DN. IANI is supported with the International Supplementary Features (SUPP) package 131 equipped if FCDR is set to NEW in LD 17. For a complete description of the IANI feature, see *Avaya Features and Services, NN43001-506*. Since In-Band ANI (IANI) and ISDN cannot be configured on the same trunk route, this feature's reports appear in place of the CLID reports. The ANI number is 10 digits long, with XXXXXX filling up the remaining character spaces.

The IANI field format is: xxxxxxxxxxxxxxxx

Where: xxxxxxxxxxxxxxxx = CLID field where 10 digit IANI number is output.

The rest of the field is padded with Xs (for example: 5066337327XXXXXX).

FGDANI: Feature Group D Automatic Number Identification

CDR records of calls in which an incoming Feature Group D (FGD) trunk is involved can include (optionally) an ANI digits field. You must have CDRE package 151 equipped. The option is defined per route in the FGD block (LD 19). The ANI field is supplied in N (Normal) and S (Start) records only, in both TTY and link formats.

An indication exists on the CDR record to recognize that it has an ANI field. The ANI field printout is not dependent on the tenant or CLID fields being printed for the OLD CDR format.

If only II+NPA are received in the call, these are printed in their usual positions and the rest of the ANI field is filled with blank characters. If no ANI information is received for the call, the ANI field is blank.

The Feature Group D Automatic Number Identification (FGDANI) field stores the incoming trunk FGD ANI information. In TTY format, the Feature Group D Automatic Number Identification (FGDANI) field appears in the second line of the CDR report. The second character on the second line of a TTY CDR record is "&". The two information digits (II) are separated from the 10 ANI digits (NPANXXXXXX) by a minus sign "-". A minus sign "-" on position 44 of the second line of an OLD CDR format record is a unique characteristic of a TTY CDR record containing FGD-ANI.

The FGDANI field format is: II-NPANXXxxxx

Where:

II = FGD ANI information digits (00-99) - = minus character NPA = Area Code (000-999) NXX = Exchange Code (000-9999) xxxx = Exchange Extension number (0000-9999)

Comments? infodev@avaya.com

If only II+NPA are received in the call, these are printed in their usual positions and the rest of the FGDANI field is filled with blank characters. If no ANI information is received for the call, the ANI field is blank.

DNIS: Dialed Number Identification Service

Dialed Number Identification Service (DNIS) is a number that the system uses to route the call to a person or automated service with information about a specific product line (for example, in a telemarketing environment). DNIS is supported with the International Supplementary Features (SUPP) package 131 equipped if FCDR = NEW in LD 17.

DNIS is included in the CDR record after FGD digits only if:

- the customer has the DNIS and CDR packages
- the route is a DNIS route
- the DNIS option is turned ON in the Route Data Block

This applies to Incoming DID Digit Conversion (IDC DNIS) routes within the same system.

DNIS supports Network ACD (NACD) and Feature Group D (FGD). If a DNIS trunk call is rerouted to a remote target ACD agent through the NACD and the incoming ISDN trunk's Route Data Block has DNIS-CDR enabled, the DNIS number appears at the end of Normal, Start, and End records. The DNIS number also appears at the end of CDR records for incoming FGD trunks that have enabled the DNIS-CDR option in their Route Data Block.

If the OLD CDR Format is active, the DNIS field format is: xxxx

Where: xxxx = DNIS information (0000-9999)-maximum four digits. If less digits are received, the rest of the field is filled with Xs.

If the NEW CDR Format is active, the DNIS field format is: xxxxxxx

Where: xxxxxxx = DNIS information (0000000-9999999)-maximum seven digits. If fewer digits are received, the rest of the field is filled with X characters.

TTA: Time to Answer (TTY only)

The Time to Answer feature outputs CDR information indicating the length of time taken to answer any given call. Time to Answer requires that FCDR = NEW in LD 17. The information is:

- length of time the call was in the ringing state
- whether the call was redirected; if it was, the type of redirection it encountered is also output
- total waiting time

Time to Answer expands the CDR record to three lines. The third line accommodates three new subfields. The subfields are:

- TTA—total ringing time
- REDIR—redirection indicator
- TWT—total waiting time

The total waiting time also includes the total ringing time. Therefore, to calculate the actual time in queue (Group Hunt or Attendant), the following formula must be used:

(total waiting time) - (total ringing time) = actual time in queue

The formats of the new subfields are as follows:

Total ringing time (TTA) field located on line 3 positions 3 to 7. The TTA subfield format is: MI:SS

Where:

MI = minutes (00-59) : = colon character SS = seconds (00-59)

Redirection indicator (REDIR) subfield located on line 3 position 8. TheREDIR subfield format is: A

Where:

A = space character — If no redirection occurred N—If redirection occurred prior to the terminating phone ringing, e.g. terminating phone has Call Forward All Calls activated R—If redirection occurred after terminating phone was rung, for example, call was forwarded by Call Forward No Answer.

Total waiting time (TWT) subfield located on line 3 positions 9 to 13. The TTQ subfield format is: MI:SS

Where:

MI = minutes (00-59) : = colon character SS = seconds (00-59)

INPACK: Incoming packet count

The incoming packet count (INPACK) field is used to identify the number of incoming data packets received by the MPH. It is output on the second line and occupies positions 4 to 13.

The INPACK field format is: xxxxxxxxxx

Where: xxxxxxxxxx = INPACK information—x = 0-9 and a maximum of 10 digits are allowed.

Comments? infodev@avaya.com

OUTPACK: Outgoing packet count

The outgoing packet count (OUTPACK) field is used to identify the number of outgoing data packets sent by the MPH. It is output on the second line and occupies positions 15 to 24.

The OUTPACK field format is: xxxxxxxxxx

Where: xxxxxxxxxx = OUTPACK information—x = 0-9 and a maximum of 10 digits are allowed.

BLID: Billing Line Identification (TTY only)

The Billing Line Identification (BLID) field it is used to identify the billable party when a metered trunk or a non-metered trunk with CDRX set to YES in its Route Data Block has been routed using call modification to another Meridian Customer Defined Network (MCDN) node.

BLID is 16 characters wide and output on line 3 positions 15 to 30 of the NEW CDR format.

The BLID field format is: xxxxxxxxxxxxxxxx

Where: xxxxxxxxxxxxxxxx = BLID information; a maximum of 16 digits are allowed. If fewer digits are received, the rest of the field is filled with X characters.

x = 0-9

If the BLID is less than 16 digits then blank fields are padded with Xs, for example, 1234567XXXXXXXXX.

Terminating Carriage Control (TTY only)

A carriage return option can be implemented to inform a customer-provided computer that a CDR message is complete. With the option activated, an additional carriage return precedes every CDR record. A CDR record then consists of a carriage return, a line or lines of data, and another carriage return, resulting in every other record being a null record. This option is implemented through service change and, when implemented, applies to all CDR TTY ports in the system.

Selection of this option is by response to the TRCR prompt in LD 15.

Ampersand (TTY only)

Ampersands (&) are output to indicate the start of the second line in the OLD CDR format, and to indicate the start of lines two and three in the NEW CDR format.

M911: M911 Call Abandon

With the Call Abandon feature activated, a 911 caller who aborts a call is not lost. Instead, the call forwards to an ACD queue. When the call is presented to an ACD agent, Automatic Number Identification (ANI) information appears on the agent's phone display and Automatic Location Identification (ALI) appears on the screen update. The call is then tagged in CDR Q and N records as an abandoned call. The call abandon tag appears on line 3 in positions 32-38 as shown in the following example.

Table 142: Example 8 Call abandon tag

```
 N 038 01 T081001 DN3434          00/06 06:22 00:00:14
05217201XXXXXXXX
ABANDON
Q 039 01 T081001 TN1840          00/06 06:22 00:00:18
05217201XXXXXXXX
ABANDON
```

The M911 field format is: xxxxxxx, where xxxxxxx = ABANDON or 7 blank spaces.

000: CDR 100 Hour Call

The Call Detail Recording 100 Hour Call feature expands the Call Detail Recording (CDR) duration measurement capability to accommodate calls with a duration greater than 99:59:59.

This feature provides a 100 Hour Duration field. This field is automatically displayed on the third line of all current Fixed Format CDR record types that have the duration field even though the call may be less than or greater than 99:59:59. Example Figure 3: The CDR format for CDR 100 Hour Call on page 163 illustrates the CDR format for CDR 100 Hour Call.

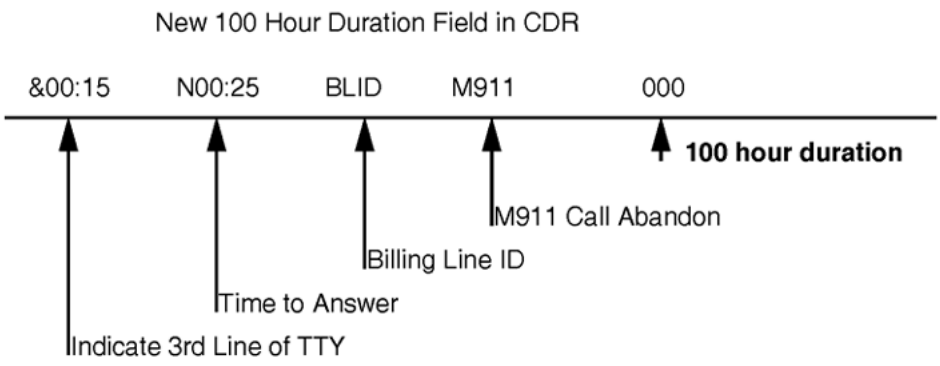

Figure 3: The CDR format for CDR 100 Hour Call

The CDR 100 Hour call field format is: xxx, where xxx = 000 to 999.

B: Busy Tone Identifier

With CDR on Busy Tone, a B record is output when an incoming or internal call is abandoned on busy tone. The CDR on Busy Tone B record information is displayed on the third line of the CDR B record for customers with the New CDR format (FCDR) configured. The third line is also used by the Time to Answer (TTA) feature. A 'B' standing for Busy Tone Condition is printed in the Redirection Identifier subfield. The TTA subfields that usually show the total ringing time and the total waiting time are left blank.

For a simple incoming call, the following CDR B record can be produced:

```
B  001  00  T010004  4001     00/00  00:08:23
&                                                                    00 000
&    B
```

Note the location of the B field on line 3, position 8.

Session Initiation Protocol (SIP) Trunk Call

A Converged Desktop (CD) call can be originated from an Avaya Communication Server 1000 system, routed by Avaya Multimedia Communication Server (Avaya MCS 5100), and terminated back to the Avaya CS 1000 system. Coordination with Avaya MCS 5100 billing is required.

Note:

A CD user is a CS 1000 telephone defined in a SIP domain that may have 0 or more terminals in a SIP or other type of network. Any incoming call to its DN is forwarded to its corresponding

SIP (or other) terminal. For more information on Converged Desktop Service, see *Avaya IP Peer Networking Installation and Commissioning, NN43001-313*.

x-nt-corr-id field

A new field named 'x-nt-corr-id' is introduced in the CDR records generated for a CD user or a SIP trunk call. This field is used for record correlation on the Avaya MCS 5100 Accounting Server. The 'x-nt-corr-id' is received or generated at the CS 1000 Call Server for each new call. This information is used for building the CDR Record.

The 'x-nt-corr-id' data is globally unique and is a string with a maximum of 512 characters.

The following is a sample correlation ID string, which is 40 characters long and is in hexadecimal format.

```
0000002F14070F2932@00007544F268-2F0BFF16
```

The format that CS 1000 systems use is fixed and requires the special characters "@" and "-" to be in the appropriate place in the string (that is, "@" as the 19th character and "-" as the 32nd character). The format is as follows:

```
+------------------+-+-----------------------------+
| seqnum timestamp |@| Macaddr |-| Ipaddr          |
+------------------+-+-----------------------------+
| 18 char |1 | 12 chars in hex |1| 8 chars in hex  |
+------------------+-+-----------------------------+
| Totally 40 chars                                 |
+------------------+-+-----------------------------+
```

CDR TTY

The new record is added to the end of the existing record and occupies a new line (the fourth line). The final output of a CDR record with the x-nt-corr-id is as follows:

```
N 051 00 DN3456 T000045 09/07 11:51:30 00:07:15.0 92126823333
&
&
&0000002F14070F2932@00007544F268-2F0BFF16
```

The fourth line appears only if CRID = YES (in LD 16) for a particular SIP route.

CDR Output for Incoming CD Call

CDRs for a CD simulate the CDR outputs in a SIMRING call. However, because the CD call was made by a common pool of PCA agents instead of a designated PCA in the SIMRING case, some variation applies.

The basic rule for the CDR output of an incoming CD call is that the caller of the PCA extended calls shows the DN of the called CD. For example, if A calls B and B is a CD user, three records are returned:

- A to B
- B to VTRK
- B to B, where the last two calls were made by PCA but the caller had been replaced to be B.

The following tables give examples on CDR output given in different call scenarios.

Incoming call to CDMO, abandoned

Table 143: Abandoned CDMO call on page 165 lists the CDRs for an incoming call to CD (DN 3210) if the caller abandons the call.

Table 143: Abandoned CDMO call

Status	CDRs	Description
CD is ringing.	N075013210 T10101010/2015:12:4900:00:00.0A1015100 & 000 000 & 000 &000000C3140A0F0C30@0000754588D0-2F0BD9FF	PCA extended. SIP trunk call is released.
CD is idle after the caller abandons the call.	B 076 01 3200 3210 10/20 15:12:50 & 000 000 & 00:02 B 077 01 3210 3210 10/20 15:12:50 & 000 000 & 00:01	The call between the CD and the caller is abandoned. Abandon record from ringback PCA to CD.

Incoming call to CDMO, answered at CD

Table 144: Answered CDMO call on page 165 lists the CDRs for an incoming call to CD (DN 3210) answered at CD.

Table 144: Answered CDMO call

Status	CDRs	Description
CD is ringing.	N078013210 T10101010/2015:12:5800:00:02.0A1015100 & 000 000 & 000 &000000C4140A0F0D01@0000754588D0-2F0BD9FF	PCA extended. SIP trunk call is released.

Status	CDRs	Description
CD is idle after the caller abandons the call.	B 070 01 3210 3200 10/20 15:12:19& & 000 000 & 00:04 B 071 01 3200 3200 10/20 15:12:19 & 000 000 & 00:04	Call is abandoned. Abandon record from ringback PCA to CD.

Incoming call to CDMV, abandoned

Table 145: Abandoned CDMV call on page 166 lists the CDRs for an incoming call to CD (DN 3200) if the caller abandons the call.

Table 145: Abandoned CDMV call

Status	CDRs	Description
CD is ringing.	N069013200 T10101010/2015:12:1500:00:00.0A1015100 & 000 000 & 000 &000000C4140A0F0D01@0000754588D0-2F0BD9FF	PCA extended. SIP trunk call is released.
CD is idle after the caller abandons the call. Call is ended.	B 070 01 3210 3200 10/20 15:12:19 & 000 000 & 00:04 B 071 01 3200 3200 10/20 15:12:19 & 000 000 & 00:04	Call is abandoned. Abandon record from ringback PCA to CD.

Incoming call to CDMV, answered

Table 146: Trunk answered CDMV call on page 166 lists the CDRs for an incoming call to CD (DN 3200) if the trunk answers the call.

Table 146: Trunk answered CDMV call

Status	CDRs	Description
Call forked by Avaya MCS 5100 and answered over SIP trunk.	S072013200 T10101010/2015:12:3500:00:00.0A1015100 & 000 000 & 000 &000000C2140A0F0C22@0000754588D0-2F0BD9FF	PCA is extended. SIP trunk call is answered.
Call to CD is dropped.	B 073 01 3200 3200 10/20 15:12:36 00:00:00.0 & 000 000 & 00:01 000	Call to CD is dropped.

Status	CDRs	Description

Call is ended	`E 074 01 3210 T10101010 10/20 15:12:37 00:00:00.0 65100`
	`&  000 000`
	`& 00:02  000`
		The call is released between the caller and trunk.

Incoming call to CDMV, answered

Table 147: Trunk answered CDMV call on page 167 lists the CDRs for an incoming call to CD (DN 3200) if the CD answers the call.

Table 147: Trunk answered CDMV call

Status	CDRs	Description

Call is forked by Avaya MCS 5100 and answered by CD.	`N072013200`
	`T10101010/2015:12:3500:00:00.0A1015100`
	`&  000 000`
	`&  000`
	`&000000C2140A0F0C22@0000754588D0-2F0BD9FF`
		PCA is extended. SIP trunk call is answered.

CD establishes the call.	`L 073 01 3200 3200 10/20 15:12:36 00:00:00.0`
	`&  000 000`
	`& 00:01  000`
		CD answers the call and the call is merged.

Call is ended.	`L 074 01 3210 3200 10/20 15:12:37 00:00:00.0`
	`&  000`
	`& 00:02  000`
		The call is released between the caller and CD.

Chapter 7: Teletype call record output

Contents

This section contains information on the following topics:

Introduction on page 169

Record output and storage on page 169

More about TTY output on page 170

Reversed Wired CO trunk on page 170

Old and New Format CDR on page 170

Introduction

Each call record is output on a Teletype (TTY) as one, two, or three lines. The records are broken into fields, the significance of which is determined by their position in a line. Fields are separated by one or more blank characters. The unused fields in a given record are left blank.

Record output and storage

Records generated by CDR can be output to any device with an EIA RS-232 compatible interface. An example is records output to a printer for hard copy reports. Records may also be stored on tape for later downstream processing.

Screen or printer output uses the standard ASCII character set. A CDR record takes up one or more lines on a printed page, depending on the release of software and software packages and features enabled.

CDR data may contain the ASCII NUL character that appears randomly interspersed among the CDR characters. The NUL character is a control character that means "Do nothing". It does not appear on the printed output, and holds no significance to the CDR record. It may be deleted

from the data stream without affecting the content of the record. When analyzing it as part of the data flow, view the NUL character as occupying zero character positions, so it does not affect beginning and ending positions for any field in the record.

The Serial Data Interface (SDI) cable between the switch and the CDR cabinet can be up to 15.24 m (50 ft.) long. Beyond this distance, modems are required.

More about TTY output

The output format is dependent on the software release and features enabled. Figure 4: Sample OLD CDR format TTY records on page 173 shows samples of OLD CDR format TTY records, while the output field locations are given in the following tables:

- Table 148: OLD CDR format TTY output field locations on page 173 OLD CDR format TTY output field locations
- Table 149: NEW CDR format TTY output field locations on page 177 NEW CDR format TTY output field locations
- Table 150: G and H records TTY output field locations on page 180 G and H records TTY output field locations

Reversed Wired CO trunk

CDR records will be affected by miswiring the NT8D14 universal trunk card. Calls will not be released, and reports can indicate abandoned calls, or origination times that are not accurate. Be sure to check any trunk flagged as reverse-wired to ensure accurate CDR reports. For a complete description, see *Avaya Circuit Card Reference, NN43001-311*.

Old and New Format CDR

The Format CDR package allows administrators to configure a new CDR format by entering "NEW" at the FCDR prompt in LD 17.

With the OLD CDR format, the packages equipped determine the number of lines to appear in call record output. For example, if Multi-Tenant Service (TENS), Periodic Pulse Metering (PPM), Advice of Charge (AOC), Calling Line Identification (CLID), Feature Group D Automatic Number Identification (FGD ANI) or Dialed Number Identification Service (DNIS) features are enabled with the OLD CDR format, then CDR records are two lines. If none of these packages or features are equipped, OLD CDR format records are one line.

With the new Format CDR (FCDR = NEW), CDR records are two lines if the Time to Answer (TTA) feature is not activated for the customer, or three lines, if the TTA feature is activated for the customer.

With the OLD CDR format, the field location is dependent on which packages are equipped. An example is the TIMESTAMP field. If Internal CDR is equipped, the TIMESTAMP field is line 1 positions 50 to 60 for L records and line 1 positions 38 to 48 for all other records.

With New Format CDR, the fields are given fixed locations and all information is left justified. For example, the TIMESTAMP field is fixed at line 1 positions 26 to 39 for all record types.

Screen or printer output uses the standard ASCII character set. Data may contain the ASCII NUL character randomly interspersed among the CDR characters. The NUL character is a control character that means "Do nothing" and does not appear on the printed output. It may be deleted without affecting the record, and it does not affect beginning and ending positions for any field in the record.

Note 1: Digits prefixed with "A" identify an RS/ANI route selection; those prefixed with an "E" identify a NARS, BARS, or CDP call. "E" indicates an expensive route was used. Digits prefixed with "C" indicate that the digits stored are MFC CNI digits for an incoming call.

Note 2: The Originating and Terminating ID's can be: Trrrmmm Trunk route and member number Arrrmmm Answered answer supervised Trunk route and member number DNxxxx Directory Number ATTNxx Attendant number CFlllnn loop and conference number.

Note 3: Terminating ID for Connection records is TNxxxx, where xxxx is the card/units (packed format) of the agent station. The terminating ID for answered calls on supervised trunks is: Arrrmmm Answered answer supervised Trunk route and member number

Note 4: The Auxiliary ID identifies the Terminal Number of the originating station when the station has a multiple appearance prime DN. The format is lll.s.cc.uu, where: lll = loop, ss = shelf, c = card, and uu = unit.

Note 5: When Multi-Tenant Service is equipped, the Tenant Numbers of the originating and terminating parties are printed on a second line, below the OrigID and TerID fields, as shown below:

```
N 001 00 DN4999 A000009 7.1.02.1    06/28 10:15 00:00:20 9828124
006     102
```

Note 6: When Calling Line Identification (CLID) is equipped, the CLID is printed on a second line, below the record number, as shown below:

```
N 002 00 DN4999  DN5064  7.1.02.1    06/28 10:22 00:00:12 9828124
95551111XXXXXXXX
```

Note 7: When Calling Line Identification (CLID) is equipped, along with CDRE package 151, the CLID is printed on a second line, below the record number, as shown below:

```
N 002 00 DN4999  DN5064  7.1.02.1    06/28 10:22 00:00:12 9828124
&       95551111XXXXXXXX
```

Note 8: When Calling Line Identification (CLID) and Multi-Tenant Service are both equipped, they are printed as shown below:

```
N 003 00 DN4999  DN5064  7.1.02.1    06/28 10:26 00:00:08 9828124
006     102     95551111XXXXXXXX
```

Note: When Calling Line Identification (CLID) and Multi-Tenant Service are both equipped, they are printed as shown below:

```
N 003 00 DN4999  DN5064  7.1.02.1    06/28 10:26 00:00:08 9828124
&006     102     95551111XXXXXXXX
```

(only generated with CDRE package is equipped with FGD)

Note: When In-Band ANI (IANI) is operating, the ANI number will be generated in the same field as the CLID feature. It appears on the second line, below the record number, in the format shown below:

```
N 002 00 DN4999  DN5064  7.1.02.1    06/28 10:22 00:00:12 9828124
123456789XXXXXXX
```

Note: PPM or AOC and appropriate CDR options equipped to obtain these fields. (xxxxx = Total Pulse Count; yyyyyy = Call Charge/Meter Overflow). The Pulse Count, Call Charge and Meter Overflow fields only appear for Start, Normal, Transfer and End Records.

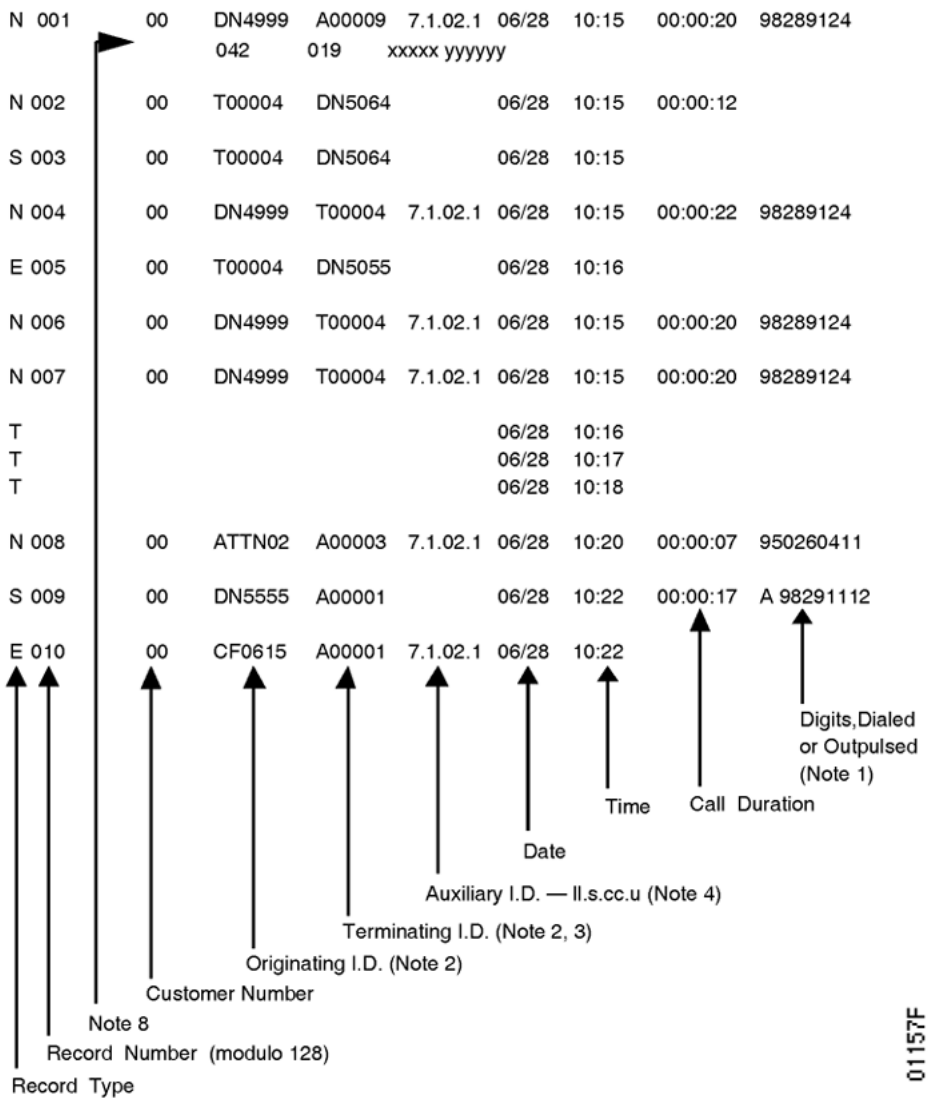

Figure 4: Sample OLD CDR format TTY records

Table 148: OLD CDR format TTY output field locations on page 173 lists OLD CDR format TTY output field locations.

Table 148: OLD CDR format TTY output field locations

Line	Position	Field	Field Format	Field Definition
	Fields common to all records:			
1	1	RECTYPE	Y	Record Type
	2	<blank>		Blank space
	Format used by I and T records:			

Line	Position	Field	Field Format	Field Definition
1	3-25	<blank>		Blank spaces
1	26-36	TIMESTAMP	MO/DD_HH:MI	Time stamp
	Fields common to A, C, E, F, L, M, N, P, Q, R, S, and X records:			
1	3-5	RECNO	XXX	Record Sequence Number
1	6	<blank>		Blank space
1	7-8	CUSTNO	XX	Customer Number
1	9	<blank>		Blank space
1	10-16	ORIGID		Originating Identification:
			TRRRMMM	Trunk
			ARRRMMM	Answered Answer Supervision Trunk
			DNXXXX	Directory Number (see Note)
			ATTNXX	Attendant Number
			CFLLLNN	Conference Number
	Note: If the system is equipped with the CDRE package, the format for the DN (or ACD Position ID) in the ORIGID or TERID field is XXXXXXX to accommodate up to 7 digits.			
1	17	<blank>		Blank space
1	18-24	TERID	same as ORIGID	Terminating Identification
1	25	<blank>		Blank space
1	26-36	AUXID	LLL.S.CC.UU	Originating Auxiliary Identification for L records, Auxiliary Identification for all other records
1	37	<blank>		Blank space
	Fields common to A, C, E, F, M, N, P, Q, R, S, and X records:			
1	38-48	TIMESTAMP	MO/DD_HH:MI	Time stamp
1	49	<blank>		Blank space
	Fields common to E, F, N, Q, R, and S records:			
1	50-57	DURATION	HH:MI:SS	Duration
1	58	<blank>		Blank space
	Field common to F, N, Q, R, and S records:			

Line	Position	Field	Field Format	Field Definition
1	59-90	DIGITS	XXX...X	Digits dialed: Up to 32 digits
	or			
1	59-92	DIGITS	A XXX...X	Route Selection was used + up to 32 digits
			C XXX...X	MFC Calling Number Identification + up to 32 digits
			E XXX...X	BARS/NARS call placed over expensive route + up to 32 digits
	Field common to A, C, M, and P records:			
1	50-72	DIGITS	XXX...X	Digits dialed 14 Authorization code, or 23 Charge Account, or 23 Calling Party Number
	Format for L records:			
1	38-48	TERMAUXI D	LLL.S.CC.UU	Terminating Auxiliary Identification
1	49	<blank>		Blank space
1	50-60	TIMESTAM P	MO/DD_HH:MI	Time stamp
1	61	<blank>		Blank space
1	62-69	DURATION	HH:MI:SS	Duration
1	70	<blank>		Blank space
1	71-73	ORIGTEN0	XXX	Originating Tenant Number
1	74	<blank>		Blank space
1	75-77	TERTEN0	XXX	Terminating Tenant Number
	Format used for CLID only:			
2	1-2	<blank>		Blank spaces
2	3-18	CLID	XXX...X	Calling Line Identification is always 16 characters, for example: 1234567XXXXXXXXX
	Format used for CLID and Tenant:			
2	1-9	<blank>		Blank spaces
2	10-12	ORIGTEN0	XXX	Originating Tenant Number
2	13-17	<blank>		Blank spaces
2	18-20	TERTEN0	XXX	Terminating Tenant Number

Line	Position	Field	Field Format	Field Definition
2	21-24	<blank>		Blank spaces
2	25-40	CLID	XXX...X	Calling Line Identification is always 16 characters. For example: 1234567XXXXXXXXX
	Format used for PPM/AOC only:			
2	1-9	<blank>		Blank spaces
2	10-14	CHGINFO	XXXXX	Charge Information
2	15	<blank>		Blank space
2	16-21	CALLCHG	XXXXXX	Calculated Call Charge/Meter Overflow
	Format used for PPM/AOC and CLID:			
2	1-9	<blank>		Blank spaces
2	10-14	CHGINFO	XXXXX	Charge Information
2	15	<blank>		Blank space
2	16-21	CALLCHG	XXXXXX	Calculated Call Charge/Meter Overflow
2	22-24	<blank>		Blank spaces
2	25-40	CLID	XXX...X	Calling Line Identification is always 16 characters, for example: 1234567XXXXXXXXX
	Format used for PPM/AOC and Tenant:			
2	1-9	<blank>		Blank spaces
2	10-12	ORIGTEN0	XXX	Originating Tenant Number
2	13-17	<blank>		Blank spaces
2	18-20	TERTEN0	XXX	Terminating Tenant Number
2	21-25	<blank>		Blank spaces
2	26-30	CHGINFO	XXXXX	Charge Information
2	31	<blank>		Blank space
2	32-37	CALLCHG	XXXXXX	Calculated Call Charge/Meter Overflow
	Format used for PPM/AOC and Tenant and CLID:			
2	1-9	<blank>		Blank spaces
2	10-12	ORIGTEN0	XXX	Originating Tenant Number

Line	Position	Field	Field Format	Field Definition
2	13-17	<blank>		Blank spaces
2	18-20	TERTEN0	XXX	Terminating Tenant Number
2	21-25	<blank>		Blank spaces
2	26-30	CHGINFO	XXXXX	Charge Information
2	31	<blank>		Blank space
2	32-37	CALLCHG	XXXXXX	Calculated Call Charge/Meter Overflow
2	38-40	<blank>		Blank spaces
2	41-56	CLID	XXX...X	Calling Line Identification is always 16 characters, for example: 1234567XXXXXXXXX
	Format used for CDRE only:			
2	1	<blank>		Blank space
2	2	CDRE	&	Ampersand
	Format used for FGD and DNIS:			
2	1	<blank>		Blank space
2	2	CDRE	&	Ampersand
2	3-41	<blank>		Blank space
2	42-54	FGDANI	XX-NPANXXXXXX	Feature Group D ANI
2	55	<blank>		Blank space
2	56-59	DNIS	XXXX	DNIS number

Table 149: NEW CDR format TTY output field locations on page 177 lists NEW CDR format TTY output field locations.

Table 149: NEW CDR format TTY output field locations

Line	Position	Field	Field Format	Field Definition
1	1	RECTYPE	Y	Record Type
1	2	<blank>		Blank space
1	3-5	RECNO	XXX	Record Sequence Number
1	6	<blank>		Blank space
1	7-8	CUSTNO	XX	Customer Number
1	9	<blank>		Blank space

Line	Position	Field	Field Format	Field Definition
1	10-16	ORIGID		Originating Identification:
			TRRRMMM	Trunk
			ARRRMMM	Answered Answer Supervision Trunk
			DNXXXX	Directory Number (see Note)
			ATTNXX	Attendant Number
			CFLLLNN	Conference Number
	Note: If the system is equipped with the CDRE package, the format for the DN (or ACD Position ID) in the ORIGID or TERID field is XXXXXXX to accommodate up to 7 digits. For internal calls (RECTYPE L), if the CDRE package is not equipped, the TERID field occupies locations 18-23, and all succeeding fields are printed one character further to the left than shown below.			
1	17	<blank>		Blank space
1	18-24	TERID	same as ORIGID	Terminating Identification
1	25	<blank>		Blank space
1	26-39	TIMESTAMP	MO/DD_HH:MI:SS	Time stamp
1	40	<blank>		Blank space
1	41-50	DURATION	HH:MI:SS.S	Duration
1	51	<blank>		Blank space
1	52	DIGITTYPE	E, A, C, or blank	Digit type identifier A = BARS/NARS routing C = MFC CNI digits E = BARS/ NARS routing over expensive route
1	53-84	DIGITS	XXX...X	Digits dialed
1	85-86	<blank>		Blank spaces
1	87	<blank>		
1	88	<cr>		
1	89	<lf>		
2	1	<blank>		Blank space
2	2	&	&	new line indicator
2	3-18	CLID	XXX...X	Calling Line Identification is always 16 characters, for

Comments? infodev@avaya.com

Line	Position	Field	Field Format	Field Definition
				example: 1234567XXXXXXXXX
2	19	<blank>		Blank space
2	20-24	CHGINFO	XXXXX	Charge Information
2	25	<blank>		Blank space
2	26-31	CALLCHG	XXXXXX	Calculated Call Charge/Meter Overflow
2	32	<blank>		Blank space
2	33-45	FGDANI	XX-NPANXXXXXX	Feature Group D ANI
2	46	<blank>		Blank space
2	47-53	DNIS	XXXXXXX	DNIS number (Release 20 and later)
2	54	<blank>		Blank space
2	55-65	ORIGAUXID	LLL.S.CC.UU	Originating Auxiliary Identification
2	66	<blank>		Blank space
2	67-77	TERMAUXID	LLL.S.CC.UU	Terminating Auxiliary Identification
2	78	<blank>		Blank space
2	79-81	ORIGTEN0	XXX	Originating Tenant Number
2	82	<blank>		Blank space
2	83-85	TERMTEN0	XXX	Terminating Tenant Number
2	86	<blank>		
2	87	<cr>		
2	88	<lf>		
3	1	<blank>		Blank space
3	2	&	&	new line indicator
3	3-7	TTA or <blank>	MI:SS	Time to Answer (total ringing time) or <blank> if CDR on Busy Tone feature applies
3	8	REDIR or B	Y or B	Time to Answer (redirection indicator) or

Line	Position	Field	Field Format	Field Definition
				Busy Tone identifier
3	9-13	TWT or <blank>	MI:SS	Time to Answer (total wait time) or <blank> if CDR on Busy Tone feature applies
3	14	<blank>		Blank space
3	15-30	BLID	XXXXXXXXXXXX X XXX	Billing Line I.D. BLID applies only for network multiple call transfers on PPM and non-PPM outgoing CO trunks.
3	31	<blank>		Blank space
3	32-38	ABANDON	ABANDON	Tags the call as abandoned (911 only)
3	39	<blank>		
3	40-42		000	100-Hour Duration
3	43	<blank>		
3	44-45	NPI	XX	CLID Numbering Plan Identification
3	46	<blank>		
3	47	TON	X	CLID Type of Number
3	48	<blank>		
3	49-50	BCAP	XX	Bearer Capability
3	51	<blank>		
3				If TRCR is set it will end in <cr><lf>

For the NEW CDR format, all fields are always output. If the field is blank it is output as spaces.

Table 150: G and H records TTY output field locations

Line	Position	Name	Format	Definition
1	1	RECTYPE	Y	Record Type
1	2	<blank>		Blank space
1	3-5	RECNO	XXX	Record Sequence Number
1	6	<blank>		Blank space

Line	Position	Name	Format	Definition
1	7-8	CUSTNO	XX	Customer Number
1	9	<blank>		Blank space
1	10-23	ORIGID	XXXXXXXXXXXXXX	Originating Identification: Data Network Address or TN
1	24	<blank>		Blank space
1	25-38	TERID	same as ORIGID	Terminating Identification
1	39	<blank>		Blank space
1	40-50	TIMESTAMP	MO/DD_HH:MI	Time stamp
1	51	<blank>		Blank space
1	52-59	DURATION	HH:MI:SS	Duration
2	1	<blank>		Blank space
2	2	&	&	new line indicator
2	3	<blank>		
2	4-13	INPACK	XXXXXXXXXX	Incoming packet count
2	14	<blank>		
2	15-24	OUTPACK	XXXXXXXXXX	Outgoing packet count

Chapter 8: Call record types

Contents

This section contains information on the following topics:

Introduction on page 184

B record (Abandoned call) on page 185

N (Normal) record on page 185

S (Start) record on page 188

X record (Transfer) on page 191

E record (End) on page 192

I record (Initialization) on page 192

T record (Time stamp) on page 193

A record (Authorization Code/Scheduled Access Restriction) on page 193

C record (Charge Account) on page 194

M record (Charge Conference) on page 195

P record (Calling Party Number) on page 196

F, R, and Q records (ACD call connections) on page 196

L record (Internal CDR) on page 198

G record (Internal Meridian 1 Packet Handler data call) on page 200

H record (External Meridian 1 Packet Handler data call) on page 200

D record (Station Activity) on page 200

Y record (Public Network Feature Invocation) on page 202

Priority Connection Record on page 205

CDR record sequencing on page 206

Introduction

All calls generate, at a minimum, single call records. Unmodified calls generate a Normal record. Modified calls generate Start, Transfer, and End records. Multiple call records can be generated for calls which are impacted by certain features.

Table 151: Call record types on page 184 presents a comprehensive list of call record types and the page on which they are described in detail. Each record type is described as it relates to packages, features and call scenarios. Record fields are discussed in the next section, starting on Call record fields on page 143.

After each record type is described, Priority connection records and CDR record sequencing are discussed.

Table 151: Call record types

Record	Description
A	A record (Authorization Code/Scheduled Access Restriction) on page 193
B	Abandoned Call on page 229
C	C record (Charge Account) on page 194
D	D record (Station Activity) on page 200
E	E record (End) on page 192
F	F, R, and Q records (ACD call connections) on page 196
G	G record (Internal Meridian 1 Packet Handler data call) on page 200
H	H record (External Meridian 1 Packet Handler data call) on page 200
I	I record (Initialization) on page 192
L	L record (Internal CDR) on page 198
M	M record (Charge Conference) on page 195
N	Feature packaging on page 30
P	P record (Calling Party Number) on page 196
Q	F, R, and Q records (ACD call connections) on page 196
R	F, R, and Q records (ACD call connections) on page 196
S	S (Start) record on page 188
T	Half Second duration accuracy on page 79

Record	Description
X	X record (Transfer) on page 191
Y	Y record (Public Network Feature Invocation) on page 202

B record (Abandoned call)

B records (Abandoned call) are output when the Time to Answer feature is active and New Format CDR is selected for CDR TTY output (FCDR = NEW in LD 17). B records are only output to CDR Teletype devices.

B records are output when:

- an unanswered incoming trunk disconnects and ABAN = YES in LD 16
- Internal CDR is equipped and an unanswered internal station disconnects from another internal station which has ABDA class of service

With the CDR on Busy Tone feature, a B record is produced when the originator of an incoming or internal call disconnects after receiving a busy tone. The CDR on Busy Tone B record information is displayed on the third line of the CDR B record when the New CDR format (FCDR) is configured.

N (Normal) record

An N record (Normal record) is generated when a simple call is established, whether or not it is extended through the Attendant Console, and when no other phone feature is activated.

For a Normal record, all phone dialpad input is included in the CDR record until such time as the End-of-Dialing (EOD) timer interval is exceeded or the user enters # from the phone dialpad. Thus, the dialed DN portion of the CDR record may include * symbols and unused digits. For example, speed call and autodial numbers often include * symbols. Each * symbol causes a software defined pause to occur when the symbol is interpreted by the system.

End-to-End Signaling (EES) digits are dialed after the timer expires, after the octothorpe (#) has been pressed, or after Answer Supervision is received. EES digits often include sensitive information such as authorization codes and account numbers. These digits appear in the CDR only if the customer chooses to include them. Administrators choose to include these digits in CDR by setting ECDR to YES in the Customer Data Block (LD 15). The default is NO.

A user can enter additional digits prior to the system receiving an EOD timeout or user-initiated # entry. In such cases, the call is completed to the correct destination but the CDR record contains the extra digits.

Feature interactions/Call scenarios

Route selection features

When one of the Route Selection features is used, the letter A precedes the DIGITS field on TTY outputs. These features are Basic Alternate Route Selection (BARS), Network Alternate Route Selection (NARS), Route Selection-Automatic Number Identification (RS-ANI) and Coordinated Dialing Plan (CDP). With the BARS and NARS features, the letter E precedes the TTY DIGITS field to indicate the call was completed over facilities that are designated (through service change) as expensive.

Incoming Calls

An incoming call answered by the attendant and extended to a station generates a Normal record, indicating the trunk as the ORIGID and the station as the TERID. No indication is given that the attendant is involved in the call.

A B record is output if the Abandoned Calls feature is active. However, when the call is abandoned during recall, the Attendant Console is shown as the TERID under all circumstances. Incoming calls answered by the attendant but not extended to a station are shown as terminating at the Attendant Console.

TIE trunk operation: If an incoming TIE trunk is connected to a metered trunk, all charges are assigned to the TIE route access code meter.

Outgoing calls

When the attendant extends an outgoing call to a station, the Normal record shows the trunk as ORIGID and the station as TERID. The DIGITS field includes the station number dialed by the attendant.

Outgoing calls on trunks with Answer Supervision only generate a record if an answer is received. Billing begins at the time of answer.

CHGINFO and CALLCHG fields are output in the second line if Message Registration (MR) package 101 is equipped and either the Periodic Pulse Metering (PPM) or Advice of Charge (AOC) feature is activated. These fields are output for all outgoing calls on metered Public Switched Telephone Network (PSTN) and Direct Outward Dial (DOD) trunk connections.

Ring Again: When the Ring Again feature is activated, a record is generated only when a trunk is seized.

TIE trunk operation: The duration of calls placed over tandem, unsupervised TIE trunks is calculated from the time the trunk is seized. The duration of calls placed over tandem, supervised TIE trunks is calculated from the time the trunk is answered. For supervised trunks

an N (Normal) or S (Start) record is generated only if Answer Supervision is received. Thus, the calling party is not charged for the time taken for outpulsing and ringing.

Tandem calls

In a scenario where a PPM trunk enters a network at one node and terminates on another network node without terminating on the first node, an N (Normal) record is output at the first node if both of the following conditions are met:

- The CDR Transfer Enhancement (CDRX) package 259 is equipped
- The response to the CDRX prompt is "YES" in LD 16 for both incoming and outgoing trunks

The N record in the above scenario includes the BLID (Billing Line I.D.) field.

Call Forward

When Call Forward is activated and results in a trunk-to-trunk (tandem) call or an incoming TIE-to-outgoing-TIE call, two N (Normal) records are generated. More than two N records can be generated if Trunk Route Optimization is activated.

The first N record shows the incoming trunk as ORIGID and the call forwarded DN as TERID. The second N record shows the call forwarded DN as ORIGID and the outgoing trunk as TERID. Both N records show the same time stamp and duration data.

An E (End) record is generated at the end of the call.

With PPM or AOC activated, charge information is assigned to the forwarding party when an internal call is forwarded over a metered trunk. Charge information appears in the form of PPM pulses or ISDN Information Elements.

One-step Call Forward: In the case where the call is forwarded directly from the phone (Phone A) to a trunk or an outgoing TIE, the LAST prompt in LD 16 has no effect. The first Normal record is generated for the incoming part of the call:

ORIGID = incoming TIE/trunk, TERID = Phone A

The second Normal record is generated for the outgoing part of the call:

ORIGID = Phone A, TERID = outgoing TIE/trunk, digits = outpulsed digits

Two-step Call Forward: In the case where the call is forwarded to another phone (from Phone A to Phone B), and then reforwarded to the trunk or outgoing TIE, the LAST prompt in LD 16 affects the second Normal record. The first Normal record is generated for the incoming part of the call:

ORIGID = incoming TIE/trunk, TERID = Phone A

If LAST = YES in LD 16, the second Normal record is generated as:

ORIGID = Phone B, TERID = outgoing TIE/trunk, digits = outpulsed digits

If LAST = NO in LD 16, the second Normal record is generated as:

ORIGID = Phone A, TERID = outgoing TIE/trunk, digits= outpulsed digits

Multistep call forward: If the case where the call is forwarded through a series of phones (for example, from Phone A to Phone B to Phone C), and then reforwarded to the trunk or outgoing TIE, the LAST prompt in LD 16 affects the second Normal record. The first Normal record is generated for the incoming part of the call:

ORIGID = incoming TIE/trunk, TERID = Phone A

If LAST = YES in LD 16, the second Normal record is generated as:

ORIGID = Phone C, TERID = outgoing TIE/trunk, digits= outpulsed digits

If LAST = NO in LD 16, the second Normal record is generated as:

ORIGID = Phone B, TERID = outgoing TIE/trunk, digits = outpulsed digits

S (Start) record

A call that is modified by certain features generates an S (Start) record. For example, an S record is generated when a call is transferred or conferenced.

The point in time at which the S (Start) record is generated is determined as follows. If the trunk is Periodic Pulse Metered, an S record is generated when the called DN answers and the transferring DN releases. If the trunk is not Periodic Pulse Metered, the S record is generated when the transferring DN releases, regardless of whether or not the called DN answers.

An S record is always generated for an attendant-extended outgoing-trunk call. The system also outputs S records for calls which are transferred to other Meridian Customer Defined Network (MCDN) stations, if the system is equipped with the CDRX package 259 and the response to the CDRX prompt is "YES" in LD 16.

When transferred across the network, the billable party is identified in the BLID field of the record.

Feature interactions/Call scenarios

Call Transfer

When Call Transfer is activated on an established call, an S record is generated instead of an N (Normal) record. The S record is generated when the transfer is complete. The S record indicates which two parties are involved immediately before the feature was activated. The TERID records the transferring DN. On call termination, an E (End) record is generated showing its final disposition. The End record shows the trunk as ORIGID and the DN as TERID.

Comments? infodev@avaya.com

X records are output if the metered trunk is transferred over an ISDN link to another node in a Meridian Customer Defined Network (MCDN). The E (End) record shows the DN as ORIGID and the trunk as TERID. The billable party is identified by the BLID field in the third line of S, X, and E records.

If the CDRX package 259 is equipped and CDRX = YES in LD 16, then S, X, and E records are output for both internal and external (to another node in a MCDN) call transfers.

When a call is transferred outside the system (external transfer) and not to another MCDN node, a second S record is generated. For the second S record, ORIGID indicates the transferring DN, TERID indicates the outgoing trunk, and DIGITS indicates the number to which the call is transferred. An E (End) record is generated at the end of the call.

Call Forward

A forwarded call that results in a trunk-to-trunk (tandem) call generates a consecutive pair of S records. The first record indicates the incoming trunk as ORIGID and the call forwarded DN as TERID. The second record indicates the call forwarded DN as ORIGID and the outgoing trunk as TERID. Both records have the same timestamp and duration data. An End record is generated at the end of the call.

When Call Forward is activated for an incoming-TIE-to-outgoing-TIE call, two Normal records are generated — one record for the incoming TIE trunk to phone, a second record for the phone to outgoing TIE trunk. In an MCDN network, if the outgoing call is not answered, only one Normal record is generated. If the outgoing call is answered, two N records are generated as stated above.

With PPM or AOC activated and when a station user who is connected to a metered trunk transfers the trunk to another internal or MCDN station, charge information in the form of either PPM pulses or ISDN Information Elements is assigned as follows:

- While the dialed station is still ringing, charge information accumulates against the transferring station until the call is answered by the called party or abandoned by the dialing party.
- If the station user transfers the call after consulting with the dialed station user, the charge information is assigned to the transferring station until the call is transferred.
- If the transferred call is redirected for any reason, charge information is assigned to the transferring station until the call is transferred.

With the Time to Answer feature enabled, the time taken to answer the original call is output in the S record. The Time to Answer information for the transfer is output in either the associated X (Transfer) or E (End) record.

Conference

When Conference is activated on an established call, an S record is generated as described for the Call Transfer feature. A subsequent S record is generated for each CDR-activated trunk

that is included in the conference. The Duration field, which appears on CDR tape but not in TTY output, is calculated from the previous S record time stamp to the current S record time stamp. Although the sequence of related S records generated is alterable by CDR processing routines, chronological (time stamp) data remains intact and each S record is generated before its corresponding E (End) record. The E (End) record shows the conference bridge as ORIGID and the trunk as TERID.

With PPM or AOC activated and when a metered trunk is added to a conference, charge information in the form of either PPM pulses or ISDN Information Elements is assigned as follows:

- The charge information is assigned to the party that included the trunk in the conference until that party disconnects.
- If the party that included the metered trunk disconnects from the conference prior to the termination of the conference, all charge information up to that time is applied to that party and all future charge information is assigned to the last station to disconnect from the conference.

With PPM or AOC activated and when an attendant conference includes one or more metered trunks, charge information in the form of either PPM pulses or ISDN Information Elements is assigned as follows:

- If the metered trunk is the source of the attendant conference and the attendant is the last internal party to disconnect from the conference, all charge information is assigned to the attendant meter.
- If an attendant with a metered trunk as the source of an attendant conference disconnects from the conference, all charge information is assigned to the meter of the last party to disconnect from the conference.
- If the attendant has the metered trunk or trunks as destinations, all charge information is assigned to the meter of the source party.

Other features

On established calls, an S record is generated for the following features:

- Barge-In/Busy Verify
- Privacy release
- Override

Calls that would usually generate an N (Normal) record are altered to generate an S record. The record indicates that a feature was activated during the call, as well as any changes to the parties involved. The trunk ID remains consistent throughout. An E (End) record is generated on call termination.

X record (Transfer)

X (Transfer) records contain detailed information about a transfer. The X record shows which parties were connected during the transfer stages of the call.

S (Start), X, and E (End) records are generated in order. However, there may be intervening records associated with other calls. All records associated with one call can be identified by the Terminating ID (TERID) which contains the same trunk route member (rrrmmm) number.

Feature interactions/Call scenarios

Periodic Pulse Metering (PPM) or Advice of Charge (AOC)

If an outgoing Periodic Pulse Metering or Advice of Charge (AOC) equipped trunk is transferred only once, one S and one E record are generated. If an outgoing Periodic Pulse Metering or AOC-equipped trunk is transferred more than once, X records are generated.

CDRX package 259 allows non-metered outgoing CO trunks to generate X records. However, the Trunk Route type must be one of these CO trunk types: COT, FEX, WAT, or DID.

The duration of a call transfer can be calculated by comparing the time stamp in one X record with the time stamp in its preceding X record. This indicates the billing time for this portion of the call for the identified originator. The PPM or AOC count applies only to this segment of the call.

Barge-In, Busy Verification, Privacy Release, or Override

When Barge-In, Busy Verification, Privacy Release or Override is applied to an established call, an S record is generated. Calls that would normally generate an N (Normal) record are altered to generate an S (Start) record. The S record indicates that a feature was activated during the call, as well as any changes to the parties involved. The trunk ID remains consistent throughout. An E record is generated on termination of the call.

If a call is transferred with the Time to Answer feature enabled, the time taken to answer the original call is output in the S record. Time to Answer information for the transfer is output in either the associated X or E record.

E record (End)

Each E (End) record is associated with a specific S (Start) record and possibly a number of X (Transfer) records. The E record is generated when the call is terminated. The E record shows the final disposition of the call. The time stamps on corresponding S, X, and E records can be used to calculate the duration of a call.

E records can contain a BLID field. The BLID field identifies the billable party where a metered trunk has been transferred to another Meridian Customer Defined Network (MCDN) node.

Feature interactions/Call scenarios

Call Transfer with Time to Answer

When a call is transferred with the Time to Answer feature enabled, the time taken to answer the original call is output in the S (Start) record. Time to Answer information for the transfer is output in either an associated X (Transfer) or E (End) record.

End of Call (EOC)

When the EOC option is used, charge information is delivered from the Central Office, (for example, using a Primary Rate connection) and only included in the End record, using the CHGINFO and CALLCHG fields. CHGINFO and CALLCHG fields for the corresponding Start and Transfer records are Zero. The charge for each segment of a transferred call can be assigned in proportion to the duration for each segment.

The information is given both in equivalent counts (calculated using the internal conversion factor) and cost (using the internal unit cost factor).

I record (Initialization)

After a system initialization, a single I record is generated.

T record (Time stamp)

When the system time or date is changed from either the attendant console or a TTY, a consecutive pair of T records is generated specifying the old and new time stamps. The first record in the pair shows the old time stamp, and the second record shows the updated time stamp.

A record (Authorization Code/Scheduled Access Restriction)

The A record is optional and is enabled using LD 88. With ACDR = YES, Authorization Code information is output in the A record. With SCDR = YES, Scheduled Access Restriction (SAR) information is output in the A record. An A record is generated for Authorization Codes when the code is entered and one of the following occurs:

- a trunk is seized.
- a local phone answers Direct Inward System Access (DISA) calls.
- Ring Again is activated, in which case both the ORIGID and TERID fields are recorded as the DN associated with the phone which enters the authorization code.

When authorization codes are stored as Auto Dial or Speed Call entries, the number stored must contain the access code followed only by the Authorization Code. All digits after the access code are interpreted as Authorization Code digits.

An A record is generated for Scheduled Access Restriction when a valid SAR Flexible Feature Code (FFC) is entered.

Feature interactions/Call scenarios

Ring Again

When Ring Again is activated, an A record for the Authorization Code is generated only after a trunk is seized.

If the Ring Again offer is cancelled or ignored, no CDR A record appears. If the Ring Again offer is accepted, the line is seized when accepted, and a CDR A report is generated.

If an Authorization Code is entered, but the call is not completed, a call record is produced with a blank TERID field.

CDR A records contain the usual fields:

- If there is an internal connection, CDR shows the originating DN and terminating DN.
- If there is a trunk call, CDR shows the originating DN and the terminating route/trunk member.

C record (Charge Account)

The C (Charge Account) record is designed to allow billing of calls to specific charge account numbers. Charge account number lengths (2 to 23 digits) are defined for each customer, using LD 15. A Charge Account record is generated when a charge code is entered at one of the following times:

- before the caller dials to establish a call.
- during an established incoming or outgoing call.
- before a conference call is established with each party.

Feature interactions/Call scenarios

Charge numbers of fixed length

The system assumes that a charge account number is valid when the number of digits entered matches the account number length, as defined in LD 15.

When a charge account number is entered before establishing a call and too few digits are entered, the system waits 30 seconds (15 seconds for 500/2500-type phones) for further input. If no further digits are entered, overflow tone is provided for 15 seconds after which the phone is locked out by the system. A Charge Account record is generated showing the partially entered account number.

When a charge account number is entered during an established call and too few digits are entered, no response is given until the interdigit timeout occurs. Overflow tone is provided for 15 seconds, and the previously established call is connected. On analog (500/2500-type) phones, if the user does not wait for a response and has dialed too few digits, each switchhook flash is interpreted as a digit 1 until the charge account length is reached. Dial tone is then returned and the next switchhook flash connects the call.

On Meridian 1 proprietary phones without a charge key, if the user does not wait for a response and has dialed too few digits, the call is reestablished when the DN key is pressed. However, no Charge Account record is produced.

Charge numbers of variable length

Attendant Consoles and Meridian 1 proprietary phones equipped with a charge (CHG) key permit entry of charge account numbers containing less digits than defined. The charge account number entered is accepted by the system when the CHG key is pressed.

A charge account number entry is also accepted by the system by operating a DN, Call Transfer, or Conference key that was active before the CHG key was operated.

The CHG key may also be used to terminate an entry to correct an error or to enter multiple charge account numbers.

Number deletion

A C record is not output by the system unless the call involves a trunk and meets the criteria set for CDR in the Route Data Block.

Call Transfer

An external call transferred from one phone (A) to another phone (B) generates an S (Start) record for phone A and an E (End) record for phone B when the call is terminated.

However, if phone B enters a charge account number and transfers the call to another phone (C), a Charge Account record is output for phone B.

If the PPM or AOC Message Registration features are not enabled, the resulting S (Start) and E (End) records do not indicate that phone B or any other intermediate phone was involved in the call. An L (Internal) record indicates B's involvement with the call. The S (Start), C, and E (End) records are associated on a time stamp and trunk basis. The trunk is the same on all three records.

If PPM or AOC Message Registration features are enabled, an X (Transfer) record is generated for all metered calls. The S (Start), C (Charge Account), X (Transfer), and E (End) records are associated on a time stamp and trunk basis. The trunk is the same on all records.

No S (Start) or E (End) records are generated when the call is an internal call.

M record (Charge Conference)

M (Charge Conference) records allow one or more charge account numbers to be assigned to one, some or all members of a conference call. Individual S (Start), M (Charge Conference), and E (End) records are generated for each trunk participating in the call. Individual E (End) records are generated for each trunk as it disconnects.

An M record is generated when a charge account code is entered after a conference is completed.

Different account numbers

To assign portions of a Conference call to different charge account numbers, the account numbers must be entered when adding a trunk to a conference and before the conference is established. For analog (500/2500-type) phones, the account number is entered after the switch hook flash and before the trunk is dialed. For Meridian 1 proprietary phones, the account number is entered after the Conference key is pressed, either before or after the trunk is dialed, and before the Conference key is pressed again. A charge account number is generated for each trunk added to the conference.

Feature interactions/Call scenarios

Single account numbers

When all parties in a Conference call are assigned the same charge account number, only one entry is required. When all the trunks are included in the conference, the charge account number is entered in the usual manner. An M record shows the phone entering the number, the trunk added, and the charge account number.

P record (Calling Party Number)

The P (Calling Party Number) record is useful in matching phone company billing records of collect calls against call detail records. Entering a Calling Party Number (CPN) of 1 to 23 digits by using a CPN key assigned to Attendant Consoles and Meridian 1 proprietary phones results in the generation of a P record. A P (Calling Party Number) record is generated each time the CPN key is used, allowing for the generation of multiple P (Calling Party Number) records.

P records are not generated until the attendant extends the call.

F, R, and Q records (ACD call connections)

Connection records are used with Automatic Call Distribution (ACD) applications connecting to auxiliary facilities (for example, customer defined host computer processors).

The three types of Connection records are R, Q, and F records. R records are generated for ACD calls that are transferred. Q records are generated for calls connecting a trunk and an ACD agent. F records are generated for ACD Conference calls.

The appropriate Connection record is generated for each connection made with an ACD agent linked to a customer provided host computer processor. Connection records allow agents to establish and modify the profile (such as the caller's name, address, or other information) of a transferred or conferenced call that is in progress. This call profile is entered in the host processor and can be displayed on an ACD agent terminal.

When the host processor finds a Connection record, it scans the CDR records for other Connection records related to that call and displays existing call profiles on the Automatic Call Distribution (ACD) agent's screen. If the call is transferred or conferenced to another agent, the call profile appears on the monitor of that agent. The agent can then change the call profile, if required. This process is repeated for subsequent transfers and conferences until the agent terminates a call or transfers it to a non-agent.

The DURATION field of Connection records contain the length of time a call has to wait before being served. Optionally, the host processor can read this information and provide RUSH displays on agent screens to signal that calls are waiting too long.

The CDR format of Connection records is similar to the N record, except that the TERID field contains the Terminal Number (TN) (packed format) of the agent phone.

Note:
Magnetic tape devices do not store Connection records.

R records and F records

If the call is transferred to or involved in a conference with another agent, the call profile is output on the second agent's terminal. The second agent can then change the call profile as required. Further transferring or involvement in conferences is treated in the same manner. When the host processor finds a Connection record, it scans the CDR records for other Connection records related to that call. Any call profiles entered earlier are displayed on the ACD agent's screen. This is repeated on all subsequent transfers and conferences until the call is terminated by an agent or transferred to a non-agent.

Note:
An incoming Central Office (CO) trunk does not create any digits in the R record.

Q records

The Q record helps customers link their Voice Response Unit (VRU) with the appropriate trunk for delivering an electronically constructed message to callers. This reduces an agent's work time for the call.

Note:
An incoming central office (CO) trunk does not create any digits in the Q record.

L record (Internal CDR)

An L record is produced when the Internal CDR criteria are satisfied. At least one L record is produced when internal calls are modified, forwarded, or transferred.

Feature packaging

Internal CDR (ICDR) requires basic CDR. To receive an ICDR record, the customer must have CDR-TTY (CTY) enabled.

Feature interactions/Call scenarios

Data input for ICDR is not supported by Attendant Administration.

An L (Internal) record is output under the following conditions:

- the Call Detail Recording (CDR) feature is enabled
- all connected parties are stations, attendants or in conference
- at least one of the parties involved has ICDR allowed (CLS = ICDA in LD 10 or LD 11; ICDR = ICDA in LD 12)

If the preceding criteria are satisfied, the following applies:

- An L (Internal) record is produced at the release of an internal call.
- One or more L (Internal) records are produced at the completion of call modification of an internal call.
- L (Internal) records are produced at the release of a multiparty call.

Automatic Call Distribution (ACD)

L (Internal) records are produced for ACD as follows:

- At the completion of an internal call.
- When the Agent Observe function is released, an L (Internal) record is produced for the agent and the internal party.
- L (Internal) records are produced when the supervisor activates or releases the Answer Emergency feature.

Note:
In all cases, the ACD Position ID is shown in the ORIGID or TERID field.

Busy Verify

When the attendant conducts Busy Verify on a phone, the established parties are connected in a conference and an L (Internal) record is produced. L (Internal) records are produced when Busy Verify is released, as described for Conference calls.

Call Park

An L (Internal) record is output when an ICDR call is parked.

Conference

Internal records are produced for Conference calls when a party joins or leaves the Conference. Internal records indicate the conference loop as the ORIGID. The last two parties remaining on a Conference call are recorded as a normal call.

Group Call

The L (Internal) record produced when a party is disconnected from a group call identifies the party and the conference loop.

Japan features

The CDR and Answer Supervision features provide a half-second accuracy option. L (Internal) records have two-second accuracy in the DURATION field, even if the half-second option is enabled. For more information, refer to the Japan Central Office Trunks feature.

Override

When phone A overrides phone B that is connected to phone C, a three-party conference is established. When phone A releases, L (Internal) records are produced showing the conference loop and each party.

L (Internal) records are also produced when the attendant releases from Override on a Do-Not-Disturb phone.

Voice messaging

L (Internal) records for calls routed to a voice messaging system contain the agent ID in the TERID field.

G record (Internal Meridian 1 Packet Handler data call)

A G record is produced when:

- CDR is configured for the customer.
- the Meridian 1 Packet Handler (MPH) Terminal Service Profile (TSP) has CDR = YES in LD 27.
- an internal data connection to the MPH is released.

H record (External Meridian 1 Packet Handler data call)

An H record is produced for:

- incoming data packet calls from the Public Network to the Meridian 1 Packet Handler (MPH) if IMPH = YES in LD 17.
- outgoing data packet calls from the MPH to the Public Network if OMPH = YES in LD 17.

The records are generated when an external connection has been released.

D record (Station Activity)

A D record is produced when CDR is configured for the customer and a trunk either terminates on, or is accessed by, a phone with CDMA class of service (CLS = CDMA in LD 10 or LD 11).

Feature packaging

D records are output only when the Station Activity Call Detail Recording (SCDR) package 251 is equipped. The SCDR package has the following prerequisites:

- base Call Detail Recording (CDR) package 4,
- CDR-TTY (CTY) package 5.

Feature interactions/Call scenarios

Call Redirection

A D record is produced for a phone engaged in a trunk call which has CDMA Class of Service. A D record is not generated for any phone which does not answer the call, regardless of whether it has CDMA or CDMD Class of Service. Any other records generated during the call are not affected.

Call Transfer

A D record is generated when a phone with CDMA Class of Service transfers a trunk call to another phone. CDR X record generation is not affected. The phone to which the call is transferred also produces a D record if it has CDMA class of service and answers the call. When the D record is produced for the phone to which the call has been transferred, the digits field of the D record shows the digits dialed by the transferring phone.

Conference

A phone engaged in a trunk call that has CDMA Class of Service generates a D record only when the phone conferences the first party. Additional "D" records are not generated if the conference is expanded. An additional D record is generated if the last conference to go on hook has CDMA class of service and if the last conferencee was not the originator of the conference. This does not affect any other CDR record generation during a conference.

CDR Route options

If a phone involved in a call has CDMA Class of Service, D records are output regardless of the CDR option assigned to the phone in the Route Data Block (LD 16). If CDR records are to be output for the trunk route, D records are output along with the other record types. If CDR records are not to be output for the trunk route, only D records are generated.

Y record (Public Network Feature Invocation)

A Y record is generated whenever a system user accesses a feature using an ISDN trunk on the Public Exchange/Central Office to which the system is connected. The only feature capable of generating Y records is the "Public Service Telephone Network (PSTN) Three Party Conferencing" feature of the NEAX-61.

Feature interactions/Call scenarios

PSTN Three Party Conferencing CDR

The CDR output from the "PSTN Three Party Conferencing" is different in certain respects from a system-based conference as only a single trunk is used, and no information on a change of state for the external callers is provided, therefore timing information is less reliable. Additionally, whenever a CDR record is generated to indicate the start of a conference, there is also an additional, external charge.

As a result, no attempt is made to make the CDR records match the normal "S" and "E" records of conference calls with two trunks. Instead of two "S" records at the start of the conference, a single "Y" record is generated to indicate a PSTN feature is invoked. This "Y" record includes all digits dialed to access the third party. The final record, produced on call clearing, remains as an "N" record, and includes information from the original call.

For the PSTN Three Party Conferencing feature, CDR "N" record generation is based on having the main call meet the CDR criteria. If CDR is only enabled for incoming calls and if the first party is an incoming external call, an "N" record is generated for the original call. For outgoing calls, a CDR is generated if the response to the CDR sub-prompt OTL is YES (and the call is toll), or the response to the OAL sub-prompt is YES.

Note:

For business systems (Private Branch Exchanges [PBX]) in New Zealand, all calls are charged varying amounts depending on geographical area; OAL is highly recommended.

CDR "Y" records are controlled by the prompt CDRY in the Route Data Block (RDB). If CDRY is YES, CDR "Y" records are generated on the first Trunk Hookswitch Flash (THF) after the system receives the INFO message, Info Request "Complete". In the case of a misoperation, where the user releases after the "Complete" rather than doing a THF, the record is produced.

Note:

CDR "Y" records can be generated for calls without an associated "N" record being generated. The case is as follows: An incoming call has its RDB set to not generate CDR records for incoming calls and the response to CDRY was YES terminates on an internal phone. The internal phone initiates a "PSTN Three Party Conference". The only record generated would be the "Y" record.

PSTN Three Party Conferencing abnormal operation

Aborting the Conference: The conference operation can be aborted by pressing the Centrex Flash key or dialing the Centrex FFC a second time without dialing a destination. This second flash requests the network complete the operation in progress. As the called number is still incomplete, the PSTN will abort the conference.

Because the INFORMATION message with the Information IE (Information Request Complete) has not been received, the system aborts any CDR processing that would have occurred with a completed call.

Aborting the Conference Unanswered Call: A second flash (Centrex key or FFC) will cause the NEAX-61 to attempt completion of the conference. Because it is not established to the third party, the extra party is dropped. Because the INFORMATION message with the Information IE (Information Request Complete) was received, the system must do all CDR processing as though it was a completed call.

Conference Controlling Party Goes On-Hook: This is a billing concern. Releasing the call to the external parties could leave the system as the billed party for calls in which the system is no longer involved. However, current operations on the NEAX-61 result in the call being torn down completely if the controlling party goes on-hook. Therefore, unless there is a change in the PSTN operation, this concern may be ignored.

An incoming call from the PSTN conferencing with another PSTN number will have only charges relating to the SECOND call assigned to the system. The call is billed as two separate calls, with each "branch" of the call billed separately, although the CONFERENCE charges is billed to the system user.

Other Abnormal Operations

As all other abnormal operations are exclusively in the PSTN environment, these is country and system based, and will conform to local operation standards and regulatory requirements for the PSTN switch.

CDR Record Production

When either the system party (which is the controlling party for the call) releases the call, or both of the public network parties release, the call is torn down. A CDR record is generated for the original caller's number, if required by the call type.

Note that "TOLL vs. all" should not be a concern for outgoing calls, as all calls in a business environment are charged. The PSTN provides a flat rate charge for conference feature usage; since the outward call is charged, ANY conference is effectively a toll call. However, from the CDR perspective, we can eliminate "local" calls since the charge is relatively negligible.

Table 152: CDR records output versus options selected

Initial call incoming:				
INC	OAL	OTL	CDRY	Result
YES	N/A	N/A	YES	both numbers generate CDR records
YES	N/A	N/A	NO	only the N record is produced
NO	N/A	N/A	YES	only CDR Y record is produced
NO	N/A	N/A	NO	no CDR record is generated

Table 153: Initial call outgoing TOLL

Initial call outgoing TOLL:				
INC	OAL	OTL	CDRY	Result
Don't Care	YES	NO	YES	both numbers generate CDR records
Don't Care	NO	YES	YES	both numbers generate CDR records
Don't Care	NO	NO	YES	only CDR Y record is produced
Don't Care	YES	NO	NO	only the N record is produced
Don't Care	NO	YES	NO	only the N record is produced
Don't Care	NO	NO	NO	no CDR record is generated

Table 154: Initial call outgoing non-TOLL

Initial call outgoing non-TOLL:				
INC	OAL	OTL	CDRY	Result

Don't Care	YES	NO	YES	both numbers generate CDR records
Don't Care	NO	YES	YES	only CDR Y record is produced
Don't Care	NO	NO	YES	only CDR Y record is produced
Don't Care	YES	NO	NO	only the N record is produced
Don't Care	NO	YES	NO	no CDR record is generated
Don't Care	NO	NO	NO	no CDR record is generated

Priority Connection Record

Connection records integrate Automatic Call Distribution (ACD) operation with host processor facilities to transfer call profiles among agents. In the integrated environment, call completion has three components:

1. switching through a voice path,
2. informing the computer of the connection (Connection record),
3. having the host processor display the call profile on the terminal of the agent receiving the call.

The time required to process all three parts of the call is cumulative. To reduce the real-time required to complete the call, Connection records have priority over other types of CDR records. Priorities are assigned in this order:

1. High priority timing queue,
2. Network input messages,
3. Regular timing queue,
4. Call ringing,
5. TTY input,
6. CDR Connection Call Processing records,
7. Other functions at lower priority levels (including other CDR records).

CDR record sequencing

Call sequence for an incoming-trunk-to-agent call

The simplest type of call to an ACD DN is an incoming call from a trunk to an agent. The typical sequence of CDR record for this type of call is:

- Q record: indicates a connection has been established
- N record: indicates that the call is terminated

Call sequence for a transfer or conference call

Calls involving transfer and conference generate a sequence of Connection, S (Start), X (Transfer), and E (End) records.

A typical sequence of records for a transfer call is:

1. Q record: Indicates that a connection has been established.
2. S record: Indicates that the first leg of the call was completed. Timing and other data are provided for this portion of the call. This record is only generated for the first leg of a call.
3. X record is available for PPM, AOC and CDR Transfer Enhancement (CDRX) related calls. After an S record has been printed, each subsequent call modification will print an X record. This X record provides timing and other PPM and AOC information for that segment of the call.
4. R record: Indicates that the call was transferred to a second agent. This record may appear before the S record when the first agent disconnects after the second agent answers. Another R record is generated each time the call is transferred to subsequent agents. There can be any number of additional R records.
5. E record: Indicates that the call is ended. It provides timing and other data for that call.

A typical sequence of records for a conference call is:

1. Q record: Indicates that a connection was established.
2. F record: Indicates that a new connection was established between two parties for a conference.

3. S record: Indicates that the conference was set up (third party included in conference). It provides timing and other information for the connection. Only one S record is generated.
4. X record is available for PPM, AOC and CDR Transfer Enhancement (CDRX) related calls. After an S record has been printed, each subsequent call modification will print an X record. This X record provides timing and other PPM and AOC information for that segment of the call.
5. F record: Generated each time a conference connection is made.
6. E record: Indicates that the call has ended. It provides timing and data for that call.

Because Connection records are processed at a higher priority than other CDR records, the actual sequence of CDR records may vary. Connection records are always output before other types of records. Under heavy traffic conditions, Connection records may be output five or more seconds before other types of records. Serial numbers indicate the actual sequence of the CDR records.

Chapter 9: Examples of call records

Contents

This section contains information on the following topics:

Introduction on page 210

Authorization Code on page 211

Authorization Code and Call Transfer on page 212

Charge Account with AUXID on page 213

Calling Party Number on page 214

Charge Conference Example 1 on page 214

Charge Conference Example 2 on page 216

Charge Conference Example 3 on page 217

Call Transfer and Charge Account features on page 219

Metered Transferred Call on page 221

Multi-Tenant on page 223

Calling Line Identification (CLID) on page 224

Calling Line Identification (CLID) on a tandem call on page 225

CDR with Outpulsed Digits on page 226

In-Band Automatic Number Identification on page 228

Feature Group D Automatic Number Identification on page 229

Abandoned Call on page 229

911 Abandoned Call on page 230

Call Transfer, Charge Account, and Time to Answer features on page 231

Metered Transferred Call and Time to Answer on page 232

Attendant CDR Enhancement for outgoing non-metered CO trunks on page 233

CDR Call Transfer Enhancement on page 234

CDR Call Transfer Enhancement with network calls on page 238

Station Activity Record on page 244

Public Network Feature Invocation Record on page 245

CDR 100 Hour Call on page 246

Introduction

The basic CDR call records include the identity of the called and calling parties, and the duration of the call. Additional records are generated when certain features are used (such as conference or authorization codes) or by certain system events (such as initialization or change of system time clock).

For all the examples shown in this section, the output described relates to that particular feature only and the output given is the TTY output. Other, unrelated, call records can be inserted between the call records shown. Therefore, when using CDR outputs pay careful attention to the Record type (RecType) field definition.

Table 155: CDR examples on page 210 lists all the examples in this chapter and the page on which they are located.

Table 155: CDR examples

Feature Name
Authorization Code on page 211
Authorization Code and Call Transfer on page 212
Charge Account with AUXID on page 213
Calling Party Number on page 214
Charge Conference Example 1 on page 214
Charge Conference Example 2 on page 216
Charge Conference Example 3 on page 217
Call Transfer and Charge Account features on page 219
Metered Transferred Call on page 221
Multi-Tenant on page 223
Calling Line Identification (CLID) on page 224
Calling Line Identification (CLID) on a tandem call on page 225
CDR with Outpulsed Digits on page 226

Feature Name
In-Band Automatic Number Identification on page 228
Feature Group D Automatic Number Identification on page 229
Abandoned Call on page 229
911 Abandoned Call on page 230
Call Transfer, Charge Account, and Time to Answer features on page 231
Metered Transferred Call and Time to Answer on page 232
Attendant CDR Enhancement for outgoing non-metered CO trunks on page 233
CDR Call Transfer Enhancement on page 234
CDR Call Transfer Enhancement with network calls on page 238
Station Activity Record on page 244
Public Network Feature Invocation Record on page 245
CDR 100 Hour Call on page 246

Authorization Code

Table 156: Example 10 Authorization Code feature using the OLD CDR format on page 211 gives an example involving the Authorization Code feature using the OLD CDR format. Table 157: Example 11 Authorization Code feature using the NEW CDR format on page 211 gives an example involving the Authorization Code feature using the NEW CDR format.

The call scenario for these examples is:

- DN 3456 enters an authorization code number 12345678 and dials 9-212-682-3333. The call is completed on route 0, member 45.
- The Authorization Code record is generated after the code is entered and accepted. The Normal call record is generated at the termination of the call.

Table 156: Example 10 Authorization Code feature using the OLD CDR format

```
 A 039 00 DN3456  T000045             09/07 11:49 12345678
A 039 00 DN3456  T000045             09/07 11:49 12345678
N 051 00 DN3456  T000045             09/07 11:51 00:07:15 92126823333
```

Table 157: Example 11 Authorization Code feature using the NEW CDR format

```
A 039 00 DN3456  T000045 09/07 11:49:00             12345678
```

```
&
&
N 051 00 DN3456  T000045 09/07 11:51:30 00:07:15.0  92126823333
&
&
```

Note:
When DURATION is not recorded, the authorization code is output in that column for "OLD" format CDR.

Authorization Code and Call Transfer

Table 158: Example 12 Authorization Code and Call Transfer features using the OLD CDR format on page 212 gives an example involving the Authorization Code and Call Transfer features using the OLD CDR format. Table 159: Example 13 Authorization Code and Call Transfer features using the NEW CDR format on page 212 gives an example involving the Authorization Code and Call Transfer features using the NEW CDR format.

The call scenario for these examples is:

- DN 7865 dials 9-*-714-555-9292# and the call completes through route 0 member 19. The call is transferred to DN 3131, but an authorization code (87654321) is entered prior to the transfer. The call terminates shortly after the transfer is made.
- An Authorization Code record is generated after the entry is complete. When the call is transferred, a Start record is generated. When the call is terminated, an End record is generated.

Table 158: Example 12 Authorization Code and Call Transfer features using the OLD CDR format

```
 A 057 00 DN7865  T000019             09/07 13:07          87654321
S 059 00 DN7865  T000019             09/07 13:10          9*7145559292
E 079 00 T000019 DN3131              09/07 13:18
```

Table 159: Example 13 Authorization Code and Call Transfer features using the NEW CDR format

```
A 057 00 DN7865  T000019 09/07 13:07:20             87654321
&
&
S 059 00 DN7865  T000019 09/07 13:10:30             9*7145559292
&
&
E 079 00 T000019 DN3131  09/07 13:18:50
```

```
&
&
```

Note:
DURATION is not supplied, but must be calculated from the TIMESTAMP field of the S and E records.

Charge Account with AUXID

Table 160: Example 14 Charge Account and AUXID features using the OLD CDR format on page 213 gives an example involving the Charge Account and AUXID features using the OLD CDR format. Table 161: Example 15 Charge Account and AUXID features using the NEW CDR format on page 213 gives an example involving the Charge Account and AUXID features using the NEW CDR format.

The call scenario for these examples is:

- DN 7234, a multiple appearance prime DN, dials 9-936-1212 and enters a charge account (123456). The call is completed on route 4, member 16.
- The Charge Account record is generated as soon as the account number is fully entered. The Normal record with AUXID (loop/shelf/card/unit) is generated at the termination of the call.

Table 160: Example 14 Charge Account and AUXID features using the OLD CDR format

```
 C 008 00 DN7234  T004016 007.2.04.03 09/07 10:07 123456
N 017 00 DN7234  T004016 007.2.04.03 09/07 10:07 00:02:10 99361212
```

Table 161: Example 15 Charge Account and AUXID features using the NEW CDR format

```
 C 008 00 DN7234  T004016 09/07 10:07:00            123456
&                                                  007.2.04.03
&
N 017 00 DN7234  T004016 09/07 10:07:00 00:02:10.0  99361212
&                                                  007.2.04.03
&
```

Note:
When DURATION is not recorded, the digits dialed are output in that column for "OLD" format CDR.

Calling Party Number

Table 162: Example 16 Calling Party Number (CPN) feature using the OLD CDR format on page 214Table 163: Example 17 Calling Party Number (CPN) feature using the NEW CDR format on page 214 gives an example involving the Calling Party Number (CPN) feature using the OLD CDR format. gives an example involving the Calling Party Number (CPN) feature using the NEW CDR format.

The call scenario for these examples is:

- DN 9876 receives a collect call on route 0, member 5 and enters CPN 201-949-3000.
- The CPN record is generated after the calling party number is entered and the caller has returned to the call. The Normal record is generated at the termination of the call.

Table 162: Example 16 Calling Party Number (CPN) feature using the OLD CDR format

```
P 025 00 T000005 DN9876              09/07 11:10 2019493000
```

```
N 027 00 T00005 DN9876              09/07 11:09 00:12:05
```

Table 163: Example 17 Calling Party Number (CPN) feature using the NEW CDR format

```
 P 025 00 T000005 DN9876  09/07 11:10:00             2019493000
&
&
```

```
 N 027 00 T000005 DN9876  09/07 11:09:00 00:12:05.0
&
&
```

Note:
When DURATION is not recorded, the calling party number digits are output in that column for "OLD" format CDR.

Charge Conference Example 1

Table 164: Example 18 Conference feature example 1 using the OLD CDR format on page 215 gives an example involving the Charge Conference feature using the OLD CDR format. Table 165: Example 19 Charge Conference feature example 1 using the NEW CDR format on

page 215 gives an example involving the Charge Conference feature using the NEW CDR format.

The call scenario for these examples is:

- DN 6543 establishes a conference call with 3 other parties, entering an account code prior to connecting each party. The parties were connected sequentially on route 0 members 16, 45 and 67. The parties disconnected in the order 67, 16 and 45. Conference loop 19 was used.
- The account codes entered were 123456, 123457 and 123458, in that order.
- The digits dialed were 9-969-9170 for the first party, 9-*-212-262-6170 for the second and 9-201-542-5747 for the third.
- A Charge Account record is generated after each entry is completed. A Start record is generated after each party is added; however, the first two Start records are generated together after the system recognizes the conference situation exists. An End record is generated as each trunk disconnects.

Table 164: Example 18 Conference feature example 1 using the OLD CDR format

```
 C 061 00 DN6543  T000016             09/07 15:10          123456
C 063 00 DN6543  T000045             09/07 15:11          123457
S 071 00 DN6543  T000016             09/07 15:12          99699170
S 072 00 DN6543  T000045             09/07 15:10          9*2122626170
C 073 00 DN6543  T000067             09/07 15:12          123458
S 079 00 DN6543  T000067             09/07 15:13          92015425747
E 087 00 CF01980 T000067             09/07 15:25
E 088 00 CF01980 T000016             09/07 15:31
E 091 00 CF01980 T000045             09/07 15:31
```

Table 165: Example 19 Charge Conference feature example 1 using the NEW CDR format

```
C 061 00 DN6543  T000016 09/07 15:10:25             123456
&
&
C 063 00 DN6543  T000045 09/07 15:11:15             123457
&
&
S 071 00 DN6543  T000016 09/07 15:12:20             99699170
&
&
S 072 00 DN6543  T000045 09/07 15:10:18             9*2122626170
&
&
C 073 00 DN6543  T000067 09/07 15:12:22             123458
&
&
S 079 00 DN6543  T000067 09/07 15:13:58             92015425747
&
&
E 087 00 CF01980 T000067 09/07 15:25:06
&
&
```

```
E 088 00 CF01980 T000016 9/07 15:31:08
&
&
E 091 00 CF01980 T000045 9/07 15:31:26
&
&
```

Note:

DURATION is not supplied, but must be calculated from the TIMESTAMP field of the S and E records.

Charge Conference Example 2

Table 166: Example 20 Charge Conference feature example 2 using the OLD CDR format on page 216 gives an example involving the Charge Conference feature using the OLD CDR format. Table 167: Example 21 Charge Conference feature example 2 using the NEW CDR format on page 217 gives an example involving the Charge Conference feature using the NEW CDR format.

The call scenario for these examples is:

- DN 6543 places the same Conference call as in Charge Conference Example 1 on page 214, except this time the account code is entered after the conference has been established and the same account code (123456) is intended to apply to all 3 conferees. Conference loop 11 is used.
- A Start record is generated as each party is connected. The first two Start records are generated at the same time as the system recognizes a conference situation.
- After the account code is entered, a separate Charge Conference record is generated for each trunk involved.

Table 166: Example 20 Charge Conference feature example 2 using the OLD CDR format

```
S 103 00 DN6543  T000016             09/07 11:17          99699170
S 104 00 DN6543  T000045             09/07 11:17          9*2122626170
S 107 00 DN6543  T000067             09/07 11:18          92015425747
M 112 00 T000045 DN6543              09/07 11:19          123456

M 113 00 T000016 DN6543              09/07 11:19          123456
M 115 00 T000067 DN6543              09/07 11:19          123456
E 121 00 CF01122 T000067             09/07 11:40
E 126 00 CF01122 T000016             09/07 11:45
E 127 00 CF01122 T000045             09/07 11:47
```

Note:

DURATION is not supplied, but must be calculated from the TIMESTAMP field of the S and E records.

Table 167: Example 21 Charge Conference feature example 2 using the NEW CDR format

`S 103 00 DN6543  T000016 09/07 11:17:12  99699170`
`&`
`&`

`S 104 00 DN6543  T000045 09/07111:17:58  9*2122626170`
`&`
`&`

`S 107 00 DN6543  T000067 09/07 11:18:46  92015425747`
`&`
`&`

`M 112 00 T000045 DN6543  09/07 11:19:06  123456`
`&`
`&`

`M 113 00 T000016 DN6543  09/07 11:19:10  123456`
`&`
`&`

`M 115 00 T000067 DN6543  09/07 11:19:48  123456`
`&`
`&`

`E 121 00 CF01122 T000067 09/07 11:40:48`
`&`
`&`

`E 126 00 CF01122 T000016 09/07 11:45:36`
`&`
`&`

`E 127 00 CF01122 T000045 09/07 11:47:22`
`&`
`&`

Charge Conference Example 3

DNIS: Dialed Number Identification Service on page 159 gives an example involving the Charge Conference feature using the OLD CDR format. Table 167: Example 21 Charge

Conference feature example 2 using the NEW CDR format on page 217 gives an example involving the Charge Conference feature using the NEW CDR format.

The call scenario for these examples is:

- DN 8765 places a Conference call with 2 other parties on route 0 members 27 and 37. A charge account (123456) is entered after the conference is established. Conference loop 11 is used.
- Later, during the conference, a fourth party on route 0 member 47 is added, but a new charge number (123457) is entered prior to adding the fourth party.
- Two Start records are generated after the conference is established.
- Two Charge Conference records are generated after the charge account entry is made.
- A Charge record is generated after the new charge number is entered.
- Start record is generated after the fourth party is added.
- End records are generated as the trunks disconnect from the conference.

Table 168: Example 22 Charge Conference feature example 3 using the OLD CDR format

S 017 00 DN8765 T000027 09/08 10:10 99291123
S 018 00 DN8765 T000037 09/08 10:11 99461130
M 021 00 T000037 DN8765 09/08 10:12 123456
M 023 00 T000027 DN8765 09/08 10:12 123456
C 037 00 DN8765 T000047 09/08 10:27 123457
S 039 00 DN8765 T000047 09/08 10:29 9*9299170
E 051 00 CF01122 T000037 09/08 11:10
E 053 00 CF01122 T000047 09/08 11:10
E 055 00 CF01122 T000027 09/08 11:11

Note:

DURATION is not supplied, but must be calculated from the TIMESTAMP field of the S and E records.

Table 169: Example 23 Charge Conference feature example 3 using the NEW CDR format

`S 017 00 DN8765  T000027 09/08 10:10:08  99291123`
`&`
`&`

`S 018 00 DN8765  T000037 09/08 10:11:22  99461130`
`&`
`&`

`M 021 00 T000037 DN8765  09/08 10:12:56  123456`
`&`
`&`

`C 037 00 DN8765  T000047 09/08 10:27:38  123457`
`&`
`&`

`S 039 00 DN8765  T000047 09/08 10:29:00  9*9299170`
`&`
`&`

`E 051 00 CF01122 T000037 09/08 11:10:50`
`&`
`&`

`E 053 00 CF01122 T000047 09/08 11:10:36`
`&`
`&`

`E 055 00 CF01122 T000027 09/08 11:11:24`
`&`
`&`

Call Transfer and Charge Account features

Table 170: Example 24 Call Transfer and Charge Account features using the OLD CDR format on page 220 gives an example involving the Call Transfer and Charge Account features using the OLD CDR format. Table 171: Example 25 Call Transfer and Charge Account features using the NEW CDR format on page 220 gives an example involving the Call Transfer and Charge Account features using the OLD CDR format.

The call scenario for these examples is:

- DN 6789 enters account code 123451 and dials 9*232-916-9166. The call is completed on route 0 member 6 and later transferred to DN 5600.
- Later the call is transferred back to DN 6789 and terminated shortly after.
- An Account Code record is generated when the entry of the code is complete.
- When the call is transferred, a Start record is generated.
- When the second transfer takes place, no record is generated as a Start record already exists for the trunk in use.
- When the call terminates, an End record is generated.

Note:

The identity of the intermediate party (DN 5600) is lost because an additional account code was not entered during or prior to the call transfer.

Table 170: Example 24 Call Transfer and Charge Account features using the OLD CDR format

```
C 076 00 DN6789  T000006             09/08 11:15          123451
```

```
S 081 00 DN6789  T000006             09/08 11:16          9*2329169166
```

```
E 097 00 T000006 DN6789              09/08 11:31
```

Table 171: Example 25 Call Transfer and Charge Account features using the NEW CDR format

```
C 076 00 DN6789  T000006 09/08 11:15:10             123451
&
&
```

```
S 081 00 DN6789  T000006 09/08 11:16:22             9*2329169166
&
&
```

```
E 097 00 T000006 DN6789  09/08 11:31:42
&
&
```

Note:

DURATION is not supplied, but must be calculated from the TIMESTAMP field of the S and E records.

Metered Transferred Call

Table 172: Example 26 Metered Transferred Call using the OLD CDR format on page 221 gives an example involving a Metered Transferred Call using the OLD CDR format. Table 173: Example 27 Metered Transferred Call using the NEW CDR format on page 222 gives an example involving a Metered Transferred Call using the NEW CDR format.

Table 174: Example 28 Metered Transferred Call with CDR Transfer Enhancement active on page 223 gives an example involving a Metered Transferred Call with the CDR Transfer Enhancement (CDRX) active.

The call scenario for these examples is:

- DN 7234 dials 99660100 to make an outgoing call. The call is routed over a Route 4 member 16. Route 4 is a PPM metered route.
- After three minutes and eight seconds have elapsed, DN 7234 transfers the call to DN 5345.
- DN 5345 talks to the trunk party for six minutes and transfers the call to DN 5346.
- DN 5346 talks to the trunk party for less than a minute and transfers the call to DN 5333.
- DN 5333 talks to the trunk party for three minutes and releases the trunk party.

Table 172: Example 26 Metered Transferred Call using the OLD CDR format

`S 008 00 DN7234  T004016 007.2.04.03 09/07 10:01 00:03:08 9660100 00029 000058`
`X 027 00 DN5345  T004016  09/07 10:10 00037 000074`
`X 044 00 DN5346  T004016  09/07 10:10 00003 000006`
`E 046 00 DN5333  T004016  09/07 10:13 00:09:56 00031 000062`

From Table 172: Example 26 Metered Transferred Call using the OLD CDR format on page 221, the Start and End times and duration for each segment of the call can be calculated as follows:

ORIGID	Start time	End Time	Duration
7234	10:01	10:04	3 minutes 8 seconds

ORIGID	Start time	End Time	Duration
5345	10:04	10:10	6 minutes
5346	10:10	10:10	Less than 1 minute
5333	10:10	10:13	3 minutes
Total Call	10:01	10:14	13 minutes 4 seconds

Table 173: Example 27 Metered Transferred Call using the NEW CDR format

```
S 008 00 DN7234  T004016 09/07 10:01:00 00:03:08.0  9660100
&                00029 000058                       007.2.04.03
&
```

```
X 027 00 DN5345  T004016 09/07 10:10:08
&                00037 000074
&
```

```
X 044 00 DN5346  T004016 09/07 10:11:03
&                00003 000006
&
```

```
E 046 00 DN5333  T004016 09/07 10:14:04 00:09:56.0
&                00031 000062
&
```

From Table 173: Example 27 Metered Transferred Call using the NEW CDR format on page 222, the Start and End times and duration for each segment of the call can be calculated as follows:

ORIGID	Start time	End Time	Duration
7234	10:01	10:04	3 minutes 8 seconds
5345	10:04	10:10	6 minutes
5346	10:10	10:10	55 seconds
5333	10:10	10:14	3 minutes 1 second
Total Call	10:01	10:14	13 minutes 4 seconds

Note:

The second line in each record is charge information and call charge if "OLD" format CDR is selected.

Table 174: Example 28 Metered Transferred Call with CDR Transfer Enhancement active

```
S 008 00 DN7234  T004016 09/07 10:01:00 00:03:08.0  9660100
&                00029 000058                       007.2.04.03
&
```

```
X 027 00 DN5345  T004016 09/07 10:10:08 00:06:08.0
&                00037 000074
&
```

```
X 044 00 DN5346  T004016 09/07 10:11:03 00:00:55.0
&                00003 000006
&
```

```
E 046 00 DN5333  T004016 09/07 10:14:04 00:03:01.0
&                00031 000062
&
```

Multi-Tenant

Table 175: Example 29 Multi-Tenant feature using the OLD CDR format on page 223 gives examples of calls in the Multi-Tenant Service environment using the OLD CDR format. Table 176: Example 30 Multi-Tenant feature using the NEW CDR format on page 224 gives examples of calls in the Multi-Tenant Service environment using the NEW CDR format.

1. DN 4999, a member of Tenant group 042, Customer 5, dials 9-828-9124. The trunk is a shared system resource.
2. DN 5000 of Customer 4 receives an incoming call. Tenant 4 has not enabled Tenant Service, so all resources contain a 000 in the Tenant Number field.
3. DN 5064 of Tenant 5 receives an incoming call. Customer 5 has Tenant Service enabled but the station does not belong to a Tenant group so all resources contain a 000 in the Tenant Number fields.

Table 175: Example 29 Multi-Tenant feature using the OLD CDR format

```
N 001 05 DN4999  A001009 027.1.02.01 06/28 10:14 00:00:20 98289124
042     000
```

```
N 001 04 T002010 DN5000              06/28 10:15 00:00:40
000     000
```

```
S 002 05 T002004 DN5064              06/28 10:18
000     000
```

Table 176: Example 30 Multi-Tenant feature using the NEW CDR format

```
N 001 05 DN4999  A001009 06/28 10:14:00 00:00:20.0  98289124
&                                                   027.1.02.01  042 000
&
```

```
N 001 04 T002010 DN5000  06/28 10:15:00 00:00:40
&                                                              000 000
&
```

```
S 002 05 T002004 DN5064  06/28 10:18:50
&                                                              000 000
&
```

Calling Line Identification (CLID)

Table 177: Example 31 Calling Line Identification (CLID) using the OLD CDR format on page 224 gives examples of calls in the Multi-Tenant Service environment with CLID using the OLD CDR format. Table 178: Example 32 Calling Line Identification (CLID) using the NEW CDR format on page 224 gives examples of calls in the Multi-Tenant Service environment with CLID using the NEW CDR format.

- CLID and Multi-Tenant enabled for a customer.
- Only CLID enabled for a customer.

Table 177: Example 31 Calling Line Identification (CLID) using the OLD CDR format

```
N 001 05 A001009 DN4999  027.1.02.01 06/28 10:14 00:00:20
042     000    6135552222XXXXXX
```

```
N 001 04 T002010 DN5000              06/28 10:15 00:00:40
000     000    6135552222XXXXXX
```

Table 178: Example 32 Calling Line Identification (CLID) using the NEW CDR format

```
N 001 05 A001009 DN4999  06/28 10:14:00 00:00:20.0
&6135552222XXXXXX                                        027.1.02.01
042 000
&
```

```
N 001 04 T002010 DN5000  06/28 10:15:22 00:00:40
&6135552222XXXXXX
&
```

Note:
The CLID always equals 16 characters; it will fill in remaining characters with Xs.

Calling Line Identification (CLID) on a tandem call

Table 179: Example 33 Calling Line Identification (CLID) on a tandem call using the OLD CDR format on page 225 gives an example of a tandem call in the Multi-Tenant Service environment with CLID using the OLD CDR format. Table 180: Example 34 Calling Line Identification (CLID) on a tandem call using the NEW CDR format on page 226 gives an example of a tandem call in the Multi-Tenant Service environment with CLID using the NEW CDR format.

The call scenario for these examples is:

DN 2616, at Node A, dials 7000, 7000 is a Directory Number on Node C. Nodes A and B have 7000 configured as a Coordinated Dialing Plan (CDP) Distant Steering Code (DSC). CDP at Node A is configured to route all calls to Node B on route 50, access code 8050. CDP at Node B is configured to route all calls to Node C on route 51, access code 8051. CDPR and AIA are set to "YES" on all the Nodes.

The following records are output at all three nodes:

Table 179: Example 33 Calling Line Identification (CLID) on a tandem call using the OLD CDR format

Originating Node (Node A) record:
`N 001 00 DN2616  A050005  06/26 13:16 00:00:22 A 80507000` `000  000`
Tandem Node (Node B) record:
`N 001 01 A050005 A051005  06/26 13:16 00:00:22 A 80517000` `000  000  2616XXXXXXXXXXXX`
Terminating Node (Node C) record:
`N 001 00 A051005 DN7000  06/26 13:16 00:00:22` `000  000  2616XXXXXXXXXXXX`

Note:
The CLID always equals 16 characters; it fills in remaining characters with Xs.

CDR with Outpulsed Digits

The Outpulsed Digits (OPD) option is most useful when a Location Code call overflows onto the public network. With the OPD enabled for these types of calls, it is much easier to match the calls with the appropriate toll charges, which are listed in the bill from the telephone company.

Table 181: Example 35 OPD examples for a Location Code call that stays within ESN on page 227 through Table 186: Example 40 OPD examples for a call onto the public network on page 228 show how the CDR output is affected by the OPD feature.

Table 180: Example 34 Calling Line Identification (CLID) on a tandem call using the NEW CDR format

Originating Node (Node A) record:

`N 001 00 DN2616  A050005 06/26 13:16:00 00:00:22.0 A80507000`
`&  000`
`000`
`&`

Tandem Node (Node B) record:

`N 001 01 A050005 A051005 06/26 13:16:00 00:00:22.0 A80517000`
`&2616XXXXXXXXXXXX  000`
`000`
`&`

Terminating Node (Node C) record:

`N 001 00 A051005 DN7000  06/26 13:16:00 00:00:22.0`
`&2616XXXXXXXXXXXX  000`
`000`
`&`

Note:

In Table 181: Example 35 OPD examples for a Location Code call that stays within ESN on page 227, Table 182: Example 36 OPD examples for a Location Code call that is routed to the public network on page 227, and Table 183: Example 37 OPD examples for a call onto the public network on page 227, it makes no difference if the NARS package is equipped.

Note:

When IFC = NI2 in LD 17 and OPD = YES in LD 16, 011 is not included in the DIGITS field for international calls and 0 is not included in the DIGITS field for operator assisted calls. To see dialed digits in CDR output, OPD must be set to NO in LD 16.

Table 181: Example 35 OPD examples for a Location Code call that stays within ESN

Digits dialed: Digits Outpulsed: Trunk Access Code: Equipped Package:	6 655 2315 2315 457 BARS
When OPD is not used, DIGITS field = 4576552315	
When OPD = "NO" (disabled), DIGITS field = 4576552315	
When OPD = "YES" (enabled), DIGITS field = 4572315	

Table 182: Example 36 OPD examples for a Location Code call that is routed to the public network

Digits dialed: Digits Outpulsed: Trunk Access Code: Equipped Package:	6 655 2315 14089882315 457 BARS
When OPD is not used, DIGITS field = 4576552315	
When OPD = "NO" (disabled), DIGITS field = 4576552315	
When OPD = "YES" (enabled), DIGITS field = 45714089882315	

Table 183: Example 37 OPD examples for a call onto the public network

Digits dialed: Digits Outpulsed: Trunk Access Code: Equipped Package:	6 408 988 2315 14089882315 932 BARS
When OPD not used, DIGITS field = 9324089882315	
When OPD = "NO" (disabled), DIGITS field = 9324089882315	
When OPD = "YES" (enabled), DIGITS field = 93214089882315	

Table 184: Example 38 OPD examples for a Location Code call that stays within ESN

Digits dialed: Digits Outpulsed Trunk Access Code: Equipped Package:	6 655 2315 : 2315 457 NARS (BARS not equipped)
When OPD is not used, DIGITS field = 66552315	
When OPD = "NO" (disabled), DIGITS field = 66552315	
When OPD = "YES" (enabled), DIGITS field = 66552315	

Note:
If the Location Code is outpulsed, it appears twice in the CDR Digits field.

Table 185: Example 39 OPD examples for a Location Code call that is routed to the public network

Digits dialed: Digits Outpulsed: Trunk Access Code: Equipped Package:	6 655 2315 14089882315 457 NARS (BARS not equipped)
When OPD is not used, Digits field = 66552315	
When OPD = "NO" (disabled), Digits field = 66552315	
When OPD = "YES" (enabled), Digits field = 645714089882315	

Table 186: Example 40 OPD examples for a call onto the public network

Digits dialed: Digits Outpulsed: Trunk Access Code: Equipped Package:	6 408 988 2315 14089882315 932 NARS (BARS not equipped)
When OPD is not used, Digits field = 64089882315	
When OPD = "NO" (disabled), Digits field = 64089882315	
When OPD = "YES" (enabled), Digits field = 69321408988231	

In-Band Automatic Number Identification

Table 187: Example 41 In-Band ANI (IANI) using the OLD CDR format on page 228 shows an example of a call with In-Band Automatic Number Identification (IANI) using the OLD CDR format. Table 188: Example 42 In-Band ANI (IANI) using the NEW CDR format on page 229 shows an example of a call with In-Band Automatic Number Identification (IANI) using the NEW CDR format.

Table 187: Example 41 In-Band ANI (IANI) using the OLD CDR format

```
N 001 02 T000004 DN5000              03/24 10:15 00:00:38
4155551212XXXXXX
```

Table 188: Example 42 In-Band ANI (IANI) using the NEW CDR format

```
 N 001 02 T000004 DN5000  03/24 10:15:22 00:00:38
&4155551212XXXXXX
&
```

Note:
The ANI number is always 10 digits, filling in the remaining character spaces with XXXXXX.

Feature Group D Automatic Number Identification

Table 189: Example 43 Feature Group D ANI (FGD ANI) using the OLD CDR format on page 229 shows an example of a call with Feature Group D Automatic Number Identification (FGD ANI) using the OLD CDR format. Table 190: Example 44 Feature Group D ANI (FGD ANI) using the NEW CDR format on page 229 shows an example of a call with FGD ANI using the NEW CDR format.

Table 189: Example 43 Feature Group D ANI (FGD ANI) using the OLD CDR format

```
 N 006 01 T096003 DN5000              03/24 10:15 00:00:02 A
&                                       00-2142341234
```

Table 190: Example 44 Feature Group D ANI (FGD ANI) using the NEW CDR format

```
N 006 01 T096003 DN5000  03/24 10:15:22 00:00:02 A
&                              00-2142341234
&
```

Abandoned Call

Table 191: Example 45 Abandoned call records on page 230 gives four examples of abandoned call records as output on the TTY.

The call scenario for this example is:

1. Route 12 member 8 makes an incoming call to DN 4322. DN 4322 rings for fifteen seconds prior to the trunk disconnecting.
2. Route 12 member 8 makes an incoming call. The call is queued for 34 seconds and then presented to the console. The attendant does not answer, after the trunk has been presented for 15 seconds the trunk disconnects.
3. Route 12 member 8 makes an incoming call. The call is queued for 38 seconds prior to the trunk disconnecting. The attendant DN dialed (ATTN DN or LDN) is 2222.
4. Route 12 member 8 makes an incoming call. The call is presented to an idle attendant. The attendant does not answer. After the call has been presented for 27 seconds, the trunk disconnects.

Table 191: Example 45 Abandoned call records

`B 009 00 T012008 4322  26/02 12:22:50`
`&6671212121`
`&00:15`

`B 009 00 T012008 ATTN01  26/02 12:22:50`
`&6671212121`
`&00:15 00:49`

`B 009 00 T012008 2222 26/02 12:22:50`
`&6671212121`
`&  00:38`

`B 009 00 T012008 ATTN01  26/02 12:22:50`
`&6671212121`
`&00:27`

Note:

The total time queuing is the total time in either the attendant or group hunt queue and the total ringing time.

911 Abandoned Call

Table 193: Example 47 Call Transfer, Charge Account, and Time to Answer features on page 232 gives examples of the ACD phone CDR N and Q records with the Call abandon feature activated. The sequence of events in the example is:

1. A 911 caller hangs up
2. The abandoned 911 call is placed in an ACD queue
3. The abandoned 911 is tagged as a "call abandon" by CDR in N and Q records

4. The abandoned 911 call is presented to an ACD agent
5. The ACD agent sees both ANI and ALI information on screen

Table 192: Example 46 M911 Abandoned call records

`N 038 01 T081001 DN3434 00/06 06:22 00:00:14`
`05217201XXXXXXXX`
`ABANDON`

`Q 039 01 T081001 TN1840 00/06 06:22 00:00:18`
`05217201XXXXXXXX`
`ABANDON`

Call Transfer, Charge Account, and Time to Answer features

Table 193: Example 47 Call Transfer, Charge Account, and Time to Answer features on page 232 gives an example involving the Call Transfer, Charge Account and Time to Answer features. The sequence of events in the example is:

1. DN 6789 enters account code 123451 and dials 9*232-916-9166. The call is completed on route 0 member 6 and later transferred to DN 5600. The trunk is in the ringing state for 17 seconds before DN 5600 answers.
2. Later the call is transferred back to DN 6789 and terminated shortly after. DN 6789 rings for 40 seconds before answering the call.
3. An Account Code record is generated when the entry of the code is complete.
4. When the call is transferred, a Start record is generated.
5. When the second transfer takes place, no record is generated as a Start record already exists for the trunk in use.
6. When the call terminates, an End record is generated.

Note:

DURATION is not supplied but must be calculated from the TIMESTAMP field of the S and E records.

Note:

The identity of the intermediate party (DN 5600) is lost because an additional account code was not entered during or prior to the call transfer.

Table 193: Example 47 Call Transfer, Charge Account, and Time to Answer features

```
C 076 00 DN6789  T000006 09/08 11:15:10             123451
&
&
```

```
S 081 00 DN6789  T000006 09/08 11:16:22             9*2329169166
&
&00:17
```

```
E 097 00 T000006 DN6789  09/08 11:31:42
&
&00:40
```

Metered Transferred Call and Time to Answer

Table 194: Example 48 Metered Transferred Call using the NEW CDR format with CDR Transfer Enhancement active on page 232 gives an example involving a Metered Transferred Call and the Time to Answer feature with CDR Transfer Enhancement active.

The call scenario for this example is:

- DN 7234 places an outgoing call on metered CO route 4 member 16. After three minutes and eight seconds DN 7234 transfers the call to DN 7235. DN 7325 has Call Forward All Calls activated and set to DN 5345. DN 5345 rings for two minutes and thirty seconds prior to answering the call.
- DN 5345 transfers the call to DN 5300, DN 5300 Call Forward No Answer set to 5346. The Call Forward No Answer timer is set to forward the call after 24 seconds. DN 5300 does not answer and after the Call Forward No Answer timer expires the call is forwarded to DN 5346. DN 5346 rings for 15 seconds prior to answering the call.
- DN 5346 then transfers the call to DN 5333. DN 5333 rings for nine seconds prior to answering.

Table 194: Example 48 Metered Transferred Call using the NEW CDR format with CDR Transfer Enhancement active

```
S 008 00 DN7234  T004016 09/07 10:01:00 00:05:38.0  9660100
&                00029 000058                       007.2.04.03
&
```

```
X 027 00 DN5345  T004016 09/07 10:06:38 00:04:25.0
&                00037 000074
&02:30N
```

```
X 044 00 DN5346  T004016 09/07 10:11:03 00:03:00.0
&                00003 000006
&00:39R
```

```
E 046 00 DN5333  T004016 09/07 10:14:03 00:09:55.0
&                00031 000062
&00:09
```

Attendant CDR Enhancement for outgoing non-metered CO trunks

With the Attendant CDR Enhancement, E records are generated when the attendant originates an outgoing call and transfers it to an internal station. The records indicate the attendant as the originating party. Table 195: Example 49 Transferred outgoing attendant originated trunk call record with Attendant CDR Enhancement with FCDR set to NEW on page 233 shows sample records for the Attendant CDR Transfer Enhancement using the NEW CDR format.

Table 196: Example 50 Transferred outgoing attendant originated trunk call record with Attendant CDR Enhancement with FCDR set to NEW and CDRX active on page 234 shows sample records for the Attendant CDR Enhancement using the NEW CDR format with the CDR Transfer Enhancement (CDRX) package (259) active, (that is, response to CDRX in LD 16 is "YES").

The call sequence for the following samples is:

1. Attendant establishes an outgoing call on trunk route 10 member 1.
2. The attendant is connected to the trunk for 30 minutes and then transfers the call to an internal station (DN 2020).
3. After being connected to the internal party for ten minutes the trunk disconnects.

Table 195: Example 49 Transferred outgoing attendant originated trunk call record with Attendant CDR Enhancement with FCDR set to NEW

```
S 050 00 ATTN01  T010001 02/17 01:00:00 00:30:00.0 9667610
&
&
```

```
E 054 00 T010001 DN2020  02/17 01:40:00 00:10:00.0
&
&
```

Table 196: Example 50 Transferred outgoing attendant originated trunk call record with Attendant CDR Enhancement with FCDR set to NEW and CDRX active

```
S 050 00 ATTN01  T010001 02/17 01:00:00 00:30:00.0 9667610
&
&
```

```
E 054 00 DN2020  T010001 02/17 01:40:00 00:10:00.0
&
&
```

CDR Call Transfer Enhancement

The CDR Transfer Enhancement feature requires the CDRX package 259. CDRX allows Call Transfers involving nonmetered CO trunks to generate S, X, and E records.

With CDRX activated, (that is, response to CDRX prompt in LD 16 is "YES"), the information in the ORIGID and TERID fields for records involving transferred outgoing trunks has been updated. For these calls, the ORIGID contains the information for the internal party while the TERID contains the information for the trunk. Call Transfer CDR Transfer Enhancement is controlled on a per-route basis by the response to the CDRX prompt.

The following are samples of various transfer scenarios:

- Guarded Call Transfer record samples when FCDR is set to "OLD" in LD 17 are given in , Table 197: Example 51 Guarded Call Transfer with FCDR set to OLD on page 235samples of records when FCDR is set to "NEW" in LD 17 and CDRX is set to "NO" are given in Table 198: Example 52 Guarded Call Transfer with FCDR set to NEW and CDRX set to NO on page 235. Samples of records when FCDR is set to "NEW" and CDRX is set to "YES" in LD 16 are given in Table 199: Example 53 Guarded Call Transfer with FCDR set to NEW and CDRX set to YES on page 235.
- Unguarded Call Transfer record samples when FCDR is set to "OLD" in LD 17 are given in Table 202: Example 54 Unguarded Call Transfer with FCDR set to OLD on page 237. Samples of records when FCDR is set to "NEW" in LD 17 and CDRX is set to "NO" are given in Table 203: Example 55 Unguarded Call Transfer with FCDR set to NEW and CDRX set to NO on page 237. While samples of records when FCDR is set to "NEW" and CDRX is set to "YES" in LD 16 are given in Table 204: Example 56 Unguarded Call Transfer with FCDR set to NEW and CDRX set to YES on page 237.
- Multiple Call Transfer record samples when FCDR is set to "OLD" in LD 17 are given in Table 200: Example 57 Multiple Call Transfer with FCDR set to OLD on page 236. While samples of records when FCDR is set to "NEW" and CDRX is set to "YES" in LD 16 are given in Table 201: Example 58 Multiple Call Transfer with FCDR set to NEW and CDRX set to YES on page 236.

Simple guarded transfer

The call sequence for the following samples is the following:

1. Internal station (DN 2020) establishes an outgoing call on nonmetered CO trunk route 10 member 1.
2. After two minutes, DN 2020 initiates call transfer to DN 2030.
3. DN 2030 rings for two minutes prior to answering.
4. DN 2030 answers and talks to the party on DN 2020 for one minute. Then DN 2020 completes the transfer (this is a guarded transfer scenario).
5. DN 2030 is now connected to the trunk. After talking to the trunk party for ten minutes, DN 2030 disconnects.

Table 197: Example 51 Guarded Call Transfer with FCDR set to OLD

```
S 050 00 DN2020  T010001             02/17 01:00 00:05:00 9667610
```

```
E 054 00 T010001 DN2030              02/17 01:15 00:10:00
```

Table 198: Example 52 Guarded Call Transfer with FCDR set to NEW and CDRX set to NO

```
S 050 00 DN2020  T010001 02/17 01:00:00 00:05:00.0 9667610
&
&
```

```
E 054 00 T010001 DN2030  02/17 01:15:00 00:10:00.0
&
&
```

Table 199: Example 53 Guarded Call Transfer with FCDR set to NEW and CDRX set to YES

```
S 050 00 DN2020  T010001 02/17 01:00:00 00:05:00.0 9667610
&
&
```

```
E 054 00 DN2030  T010001 02/17 01:15:00 00:10:00.0
&
&
```

Multiple Call Transfers

The call sequence for the following samples is:

1. Internal station (DN 2020) establishes an outgoing call on nonmetered CO trunk route 10 member 1.
2. After two minutes, DN 2020 initiates call transfer to DN 2030.
3. DN 2030 answers and talks to party on DN 2020 for three minutes. DN 2020 then disconnects.
4. DN 2030 is now connected to the trunk. After talking to the trunk party for three minutes, DN 2030 initiates call transfer to DN 2040.
5. DN 2040 answers and talks to party on DN 2030 for three minutes. DN 2030 then disconnects.
6. DN 2040 is now connected to the trunk. After talking to the trunk party for two minutes, DN 2040 initiates call transfer to DN 2050. DN 2040 waits for two minutes while DN 2050 is ringing and finally disconnects.
7. DN 2050 rings for an additional three minutes and answers the call.
8. DN 2050 is now connected to the trunk. After talking to the trunk party for two minutes, DN 2050 disconnects.

Table 200: Example 57 Multiple Call Transfer with FCDR set to OLD

`S 050 00 DN2020  T010001  02/17 01:00 00:05:00 9667610`
`E 054 00 T010001 DN2050  02/17 01:15 00:15:00`

Note:

In Table 201: Example 58 Multiple Call Transfer with FCDR set to NEW and CDRX set to YES on page 236, the duration for DN 2050 also includes the time that DN 2050 was ringing after DN 2040 had disconnected.

Table 201: Example 58 Multiple Call Transfer with FCDR set to NEW and CDRX set to YES

`S 050 00 DN2020  T010001 02/17 01:00:00 00:05:00.0 9667610`
`&`
`&`

`X 053 00 DN2030  T010001 02/17 01:11:00 00:06:00.0`
`&`
`&`

```
X 057 00 DN2040  T010001 02/17 01:15:00 00:04:00.0
&
&
```

```
E 061 00 DN2050  T010001 02/17 01:20:00 00:05:00.0
&
&
```

Simple unguarded transfer

The call sequence for the following samples is:

1. Internal station (DN 2020) establishes an outgoing call on nonmetered CO trunk route 10 member 1.
2. After four minutes, DN 2020 initiates call transfer to DN 2030. While DN 2030 is still ringing, DN 2020 disconnects (this is an unguarded call transfer scenario).
3. DN 2030 rings for one minute prior to answering.
4. DN 2030 is now connected to the trunk. After talking to the trunk party for ten minutes, DN 2030 disconnects.

Table 202: Example 54 Unguarded Call Transfer with FCDR set to OLD

```
S 050 00 DN2020  T010001             02/17 01:00 00:04:00 9667610
```

```
E 054 00 T010001 DN2030              02/17 01:15 00:11:00
```

Table 203: Example 55 Unguarded Call Transfer with FCDR set to NEW and CDRX set to NO

```
S 050 00 DN2020  T010001 02/17 01:00:00 00:04:00.0 9667610
&
&
```

```
E 054 00 T010001 DN2030  02/17 01:15:00 00:11:00.0
&
&
```

Table 204: Example 56 Unguarded Call Transfer with FCDR set to NEW and CDRX set to YES

```
S 050 00 DN2020  T010001 02/17 01:00:00 00:04:00.0 9667610
```

```
&
&
```

```
E 054 00 DN2030  T010001 02/17 01:15:00 00:11:00.0
&
&
```

Note:

In both the previous examples, the duration for DN 2030 also includes the time that DN 2030 was ringing.

CDR Call Transfer Enhancement with network calls

Initial and subsequent transfers are recorded for metered trunks if Message Registration (MR) package 101 is equipped and for nonmetered trunks if CDR Transfer Enhancement (CDRX) package 259 is equipped and the response to the CDRX prompt in the Route Data Block (LD 16) is "YES".

Simple network call

The records output at the tandem node for a simple network call with PPM CDRX advice are given in Table 205: Example 59 Simple network call with PPM or CDRX active on page 238.

Following is a simple network call scenario:

Station A (DN 2020) on Node 1 establishes an outgoing call on CO trunk route 10 member 1, which is either a metered route or has CDRX set to "YES" in its Route Data Block, on Node 2 for a duration of fifteen minutes. CO trunk route 10 is either a metered route or has CDRX set to "YES" in its Route Data Block (LD 16). Node 2 is connected to Node 1 by TIE route 1.

Table 205: Example 59 Simple network call with PPM or CDRX active

```
N 054 00 T001001 T010001 02/17 01:15:00 00:15:00.0
&                00075 000375
&            2020XXXXXXXXXXXX
```

Note:

In Table 205: Example 59 Simple network call with PPM or CDRX active on page 238, the fields in the second line are output only if the CO routes is metered and the BLID field is always output as 16 characters. The field is padded to 16 characters with Xs.

Network Call Transfer

Following are Network Call Transfer scenarios. The scenarios are:

- Simple Network Call Transfer examples are shown in Table 206: Example 60 Simple Network Call Transfer case 1 on page 239 and Table 207: Example 61 Simple Network Call Transfer case 2 on page 240.
- Multiple Network Call Transfer examples are shown in Feature interactions on page 57, Table 209: Example 63 Multiple Network Call Transfer case 2 on page 242, and Table 210: Example 64 Multiple Network Call Transfer case 2 on page 243.

Simple Network Call Transfer case 1

The call sequence for the following samples is:

1. Station A (DN 3020) on Node 2 establishes an outgoing call on CO trunk route 10 member 1 on Node 2. CO trunk route 10 is either a metered route or has CDRX set to "YES" in its Route Data Block (LD 16).
2. After two minutes, station A (DN 3020) on Node 2 initiates call transfer over an ISDN MCDN link (trunk route 20 member 2) to station B (DN 2020) on Node 1. Station B (DN 2020) rings for two minutes and then station A (DN 3020) disconnects.
3. Station B (DN 2020) on Node 1 rings for another three minutes and then answers the call.
4. Station B (DN 2020) on Node 1 is now connected to the outgoing CO trunk on Node 2. After talking to the trunk party for ten minutes, station B disconnects.

Table 206: Example 60 Simple Network Call Transfer case 1

```
S 050 00 DN3020  T010001 02/17 01:00:00 00:05:00.0  9667610
&                00025 000050
&
```

```
E 054 00 T020002 T010001 02/17 01:20:00 00:10:00.0
&                00050 000100
&           2020XXXXXXXXXXXX
```

Note:

In Table 206: Example 60 Simple Network Call Transfer case 1 on page 239, the fields in the second line are output only if the CO routes are metered and the BLID field is always output as 16 characters. The field is padded to 16 characters with Xs.

Simple Network Call Transfer case 2

The call sequence for the following samples is:

1. Station A (DN 2020) on Node 1 establishes an outgoing call on CO trunk route 10 member 1 on Node 2. CO trunk route 10 is either a metered route or has CDRX set to "YES" in its Route Data Block (LD 16). The outgoing call involves station A (DN 2020) using ISDN MCDN link (trunk route 20 member 2) to access Node 2. From Node 2 the outgoing CO trunk route is used.
2. After two minutes, station A (DN 2020) Node 1 initiates call transfer to station B (DN 2030) on Node 1. Station B (DN 2030) on Node 1 rings for two minutes and then station A (DN 2020) on Node 1 disconnects.
3. Station B (DN 2030) on Node 1 rings for another three minutes and then answers the call.
4. Station B (DN 2030) on Node 1 is now connected to the outgoing CO trunk on Node 2. After talking to the trunk party for ten minutes, station B disconnects.

Table 207: Example 61 Simple Network Call Transfer case 2

```
S 050 00 T020002 T010001 02/17 01:00:00 00:04:00.0  9667610
&                00020 000040
&           2020XXXXXXXXXXX
```

```
E 054 00 T020002 T010001 02/17 01:15:00 00:11:00.0
&                00055 000110
&           2030XXXXXXXXXXX
```

Note:

In Table 207: Example 61 Simple Network Call Transfer case 2 on page 240, the fields in the second line are output only if the CO routes is metered and the BLID field is always output as 16 characters. The field is padded to 16 characters with Xs.

Multiple Network Call Transfer case 1

The call sequence for the following samples is:

1. Station A (DN 3020) on Node 2 establishes an outgoing call on CO trunk route 10 member 1 on Node 2. CO trunk route 10 is either a metered route or has CDRX set to "YES" in its Route Data Block (LD 16).
2. After two minutes, station A (DN 3020) on Node 2 initiates call transfer over an ISDN MCDN link (trunk route 20 member 2) to station B (DN 2020) on Node 1.

3. Station B (DN 2020) on Node 1 answers and talks to party on station A (DN 3020) for three minutes. Station A (DN 3020) then disconnects.
4. Station B (DN 2020) on Node 1 is now connected to the outgoing CO trunk on Node 2. After talking to the trunk party for three minutes, station B (DN 2020) on Node 1 initiates call transfer to station C (DN 2030) on Node 1.
5. Station C (DN 2030) on Node 1 answers and talks to party on station B (DN 2020) on Node 1 for three minutes. Station B (DN 2020) on Node 1 then disconnects.
6. Station C (DN 2030) on Node 1 is now connected to the outgoing CO trunk on Node 2. After talking to the trunk party for two minutes, station C (DN 2030) on Node 1 initiates call transfer to station D (DN 2040) on Node 1. Station C (DN 2030) on Node 1 waits for two minutes while station D (DN 2040) on Node 1 is ringing and finally disconnects.
7. Station D (DN 2040) on Node 1 rings for an additional three minutes and answers the call.
8. Station D (DN 2040) on Node 1 is now connected to the CO trunk on Node 2. After talking to the trunk party for two minutes, station D (DN 2040) on Node 1 disconnects.

Note:

In Table 208: Example 62 Multiple Network Call Transfer case 1 on page 241, the fields in the second line are output only if the CO routes is metered and the BLID field is always output as 16 characters. The field is padded to 16 characters with Xs.

Table 208: Example 62 Multiple Network Call Transfer case 1

```
S 050 00 DN3020  T010001 02/17 01:00:00 00:05:00.0  9667610
&                00025 000075
&
```

```
X 053 00 T020002 T010001 02/17 01:11:00 00:06:00.0
&                00030 000090
&           2020XXXXXXXXXXXX
```

```
X 054 00 T020002 T010001 02/17 01:15:00 00:04:00.0
&                00020 000060
&           2030XXXXXXXXXXXX
```

```
E 061 00 T020002 T010001 02/17 01:20:00 00:05:00.0
&                00025 000075
&           2040XXXXXXXXXXXX
```

Multiple Network Call Transfer case 2

The call sequence for the following samples is:

1. Station A (DN 2020) on Node 1 establishes an outgoing call on CO trunk route 10 member 1 on Node 2. CO trunk route 10 is either a metered route or has CDRX set to "YES" in its Route Data Block (LD 16). The outgoing call involves station A (DN 2020) using ISDN MCDN link (trunk route 20 member 2) to access Node 2. From Node 2 the outgoing CO trunk route is used.
2. After two minutes, station A (DN 2020) Node 1 initiates call transfer to station B (DN 2030) on Node 1.
3. Station B (DN 2030) on Node 1 answers and talks to party on station A (DN 2020) Node 1 for three minutes. Station A (DN 2020) on Node 1 disconnects.
4. Station B (DN 2030) on Node 1 is now connected to the outgoing CO trunk on Node 2. After talking to the trunk party for three minutes, station B (DN 2030) on Node 1 initiates call transfer to station C (DN 2030) on Node 1.
5. Station C (DN 2040) on Node 1 answers and talks to party on station B (DN 2030) on Node 1 for three minutes. Station B (DN 2030) on Node 1 then disconnects.
6. Station C (DN 2040) on Node 1 is now connected to the outgoing CO trunk on Node 2. After talking to the trunk party for two minutes, station C (DN 2040) on Node 1 initiates call transfer to station D (DN 2050) on Node 1. Station C (DN 2040) on Node 1 waits for two minutes while station D (DN 2050) on Node 1 is ringing and finally disconnects.
7. Station D (DN 2050) on Node 1 rings for an additional three minutes and answers the call.
8. Station D (DN 2050) on Node 1 is now connected to the CO trunk on Node 2. After talking to the trunk party for two minutes, station D (DN 2050) on Node 1 disconnects.

Table 209: Example 63 Multiple Network Call Transfer case 2

```
S 050 00 T020002 T010001 02/17 01:00:00 00:05:00.0  9667610
&                00025 000075
&           2020XXXXXXXXXXXX
```

```
X 053 00 T020002 T010001 02/17 01:11:00 00:06:00.0
&                00030 000090
&           2030XXXXXXXXXXXX
```

```
X 057 00 T020002 T010001 02/17 01:15:00 00:04:00.0
&                00020 000060
&           2040XXXXXXXXXXXX
```

```
E 061 00 T020002 T010001 02/17 01:20:00 00:05:00.0
&                 00025 000075
&            2050XXXXXXXXXXXX
```

Note:

In Table 209: Example 63 Multiple Network Call Transfer case 2 on page 242, the fields in the second line are output only if the CO routes is metered and the BLID field is always output as 16 characters. The field is padded to 16 characters with Xs.

Multiple Network Call Transfer case 3

The call sequence for the following samples is:

1. Station A (DN 2020) on Node 1 establishes an outgoing call on CO trunk route 10 member 1 on Node 2. CO trunk route 10 is either a metered route or has CDRX set to "YES" in its Route Data Block (LD 16). The outgoing call involves station A (DN 2020) using ISDN MCDN link (trunk route 20 member 2) to access Node 2. From Node 2, the outgoing CO trunk route is used.
2. After two minutes, station A (DN 2020) Node 1 initiates call transfer to station B (DN 2030) on Node 1.
3. Station B (DN 2030) on Node 1 answers and talks to party on station A (DN 2020) Node 1 for three minutes. Station A (DN 2020) on Node 1 disconnects.
4. Station B (DN 2030) on Node 1 is now connected to the outgoing CO trunk on Node 2. After talking to the trunk party for three minutes, station B (DN 2030) on Node 1 initiates call transfer to station C (DN 2030) on Node 1.
5. Station C (DN 2040) on Node 1 answers and talks to party on station B (DN 2030) on Node 1 for three minutes. Station B (DN 2030) on Node 1 then disconnects.
6. Station C (DN 2040) on Node 1 is now connected to the outgoing CO trunk on Node 2. After talking to the trunk party for two minutes, station C (DN 2040) on Node 1 initiates call transfer to station D (DN 3010) on Node 2. Station C (DN 2040) on Node 1 waits for two minutes while station D (DN 3010) on Node 2 is ringing and finally disconnects.
7. Station D (DN 3010) on Node 2 rings for an additional three minutes and answers the call.
8. Station D (DN 3010) on Node 2 is now connected to the CO trunk on Node 2. After talking to the trunk party for two minutes, station D (DN 3010) on Node 2 disconnects.

Table 210: Example 64 Multiple Network Call Transfer case 2

```
S 050 00 T020002 T010001 02/17 01:00:00 00:05:00.0  9667610
```

```
&                 00025 000075
&            2020XXXXXXXXXXXX
```

```
X 053 00 T020002 T010001 02/17 01:11:00 00:06:00.0
&                 00030 000090
&            2030XXXXXXXXXXXX
```

```
X 057 00 T020002 T010001 02/17 01:15:00 00:04:00.0
&                 00020 000060
&            2040XXXXXXXXXXXX
```

```
E 061 00 T020002 T010001 02/17 01:20:00 00:05:00.0
&                 00025 000075
&            3010XXXXXXXXXXXX
```

Note:

In Table 210: Example 64 Multiple Network Call Transfer case 2 on page 243, the fields in the second line are output only if the CO routes are metered and the BLID field is always output as 16 characters. The field is padded to 16 characters with Xs.

Note:

Since there is no Trunk Route Optimization (TRO) involved, the TIE trunk between Node 1 and Node 2 still remains. Therefore, the E (End) record in Table 210: Example 64 Multiple Network Call Transfer case 2 on page 243 shows the originating party as the TIE route and member number.

Station Activity Record

The Station Activity Call Detail Recording (SCDR) feature generates "D" records for any trunk involved in a call with a phone assigned CDMA class of service.

Example Table 211: Example 65 Outgoing Station Activity call record on page 244 is for a CDMA Class of Service phone making an outgoing call on a route that does not generate CDR records. The call scenario is:

Phone A (DN 5404) with CDMA Class of Service assigned makes an outgoing call on route 64 member 15 for a duration of 22 minutes. The following record is output when the connection is released.

Table 211: Example 65 Outgoing Station Activity call record

```
D 128 00 DN5404  T064015 05/22 01:00:00 00:22:00.0  8467327
&
&
```

Example Table 212: Example 66 Incoming Station Activity call record on page 245 is for a CDMA class of service phone receiving an incoming trunk call from a route that does not generate CDR records. The call scenario is:

Phone A (DN 5404) with CDMA Class of Service assigned receives an incoming trunk call on route 72 member 32 for a duration of 7 minutes. The following record is output when the connection is released.

Table 212: Example 66 Incoming Station Activity call record

```
D 049 31 T072032 DN5404  11/06 23:53:42 00:07:00.0
&
&
```

Public Network Feature Invocation Record

"Y" (Public Network Feature Invocation) records are generated when a system user accesses a Public Network feature such as "PSTN Three Party Conferencing".

Example Table 213: Example 67 Outgoing Station Activity call record on page 245 is for a phone making an outgoing call on a route that has CDRY set to "YES" and that invokes three party conference using the "PSTN Three Party Conferencing" feature of a NEAX-61. The call scenario is:

- Phone A (DN 5404) makes an outgoing call on route 64 member 15. After 6 minutes, phone A issues a Trunk Hook-switch Flash to invoke the "PSTN Three Party Conferencing" feature and dials phone B (768492). When phone B answers, phone A issues another Trunk Hook-switch Flash to form a three party conference. A "Y" record is produced at this point in the call.
- After conferring for 16 minutes, all parties disconnect. At this point an "N" record is produced.

Table 213: Example 67 Outgoing Station Activity call record

```
Y 127 00 DN5404  T064015 05/22 01:06:00 00:06:00.0  768492
&
&
```

```
N 128 00 DN5404  T064015 05/22 01:00:00 00:22:00.0  8467327
&
&
```

CDR 100 Hour Call

The Call Detail Recording 100 Hour Call feature expands the Call Detail Recording (CDR) duration measurement capability to accommodate calls with a duration greater than 99:59:59.

This feature provides a 100 Hour Duration field. This field is automatically displayed on the third line of all current Fixed Format CDR record types that have the duration field even though the call may be less than or greater than 99:59:59

The following three examples show Format CDR Records with durations less than, equal to, and greater than 100:00:00.

In Table 214: Example 68 CDR 100 Hour Call Field with call duration less than 100:00:00 on page 246, DN 2020 made a TIE call through route 2. The duration of the call is 99:59:58, so only the Duration field in the first line is shown with the time while the 100-Hour Duration field contains zeros.

In Table 215: Example 69 CDR 100 Hour Call Field with call duration equal to 100:00:00 on page 246, the duration of the call is 100:00:00. Hence, the Duration field on line 1 resets to 00:00:00 and the 100-Hour Duration field on line 3 contains 001, indicating 100 hours.

In Table 216: Example 70 CDR 100 Hour Call Field with call duration greater than 100:00:00 on page 247, the call was established for the duration of 4724:32:20. Hence, the Duration field contains 24:32:20 and the 100-Hour Duration field contains 047, representing four thousand and seven hundred.

Table 214: Example 68 CDR 100 Hour Call Field with call duration less than 100:00:00

N 005 02 2020 T002001 04/17 19:45:54 99:59:58.0 A80023033010#
& 000 000
& 000

Table 215: Example 69 CDR 100 Hour Call Field with call duration equal to 100:00:00

N 005 02 2020 2030 04/17 19:45:54 00:00:00.0 A80023033010#
& 000 000
& 001

Table 216: Example 70 CDR 100 Hour Call Field with call duration greater than 100:00:00

`N 005 02  2020  2030  04/17 19:45:54 24:32:20.0 A80023033010#`
`&  000 000`
`&  047`

Index

C

Connection records 206
    sequencing 206

M

MCE 73
MCI 73

N

N connection records 206

O

ORIGID (Originating Identification) fields 189
    S records 189

P

profiles 196, 205
    call 196, 205

Q

Q connection records 197, 202, 206

R

R connection records 197, 202
records 206
    Connection 206

S

S (Start) records 189
    Call Forward feature 189

T

TERID (Terminating Identification) fields 189
    S records 189
Tie trunks 189
    with Call Forward 189
TN (Terminal Number) 196
trunks 189
    with Call Transfer 189

V

VRU (Voice Response Unit) 197, 202