Avaya CallPilot 1006r Server Maintenance and Diagnostics

Release 5.0
NN44200-709
Issue 01.04
April 2013

© 2013 Avaya Inc.

All Rights Reserved.

Notice

While reasonable efforts have been made to ensure that the information in this document is complete and accurate at the time of printing, Avaya assumes no liability for any errors. Avaya reserves the right to make changes and corrections to the information in this document without the obligation to notify any person or organization of such changes.

Documentation disclaimer

"Documentation" means information published by Avaya in varying mediums which may include product information, operating instructions and performance specifications that Avaya generally makes available to users of its products. Documentation does not include marketing materials. Avaya shall not be responsible for any modifications, additions, or deletions to the original published version of documentation unless such modifications, additions, or deletions were performed by Avaya. End User agrees to indemnify and hold harmless Avaya, Avaya's agents, servants and employees against all claims, lawsuits, demands and judgments arising out of, or in connection with, subsequent modifications, additions or deletions to this documentation, to the extent made by End User.

Link disclaimer

Avaya is not responsible for the contents or reliability of any linked websites referenced within this site or documentation provided by Avaya. Avaya is not responsible for the accuracy of any information, statement or content provided on these sites and does not necessarily endorse the products, services, or information described or offered within them. Avaya does not guarantee that these links will work all the time and has no control over the availability of the linked pages.

Warranty

Avaya provides a limited warranty on its hardware and Software ("Product(s)"). Refer to your sales agreement to establish the terms of the limited warranty. In addition, Avaya's standard warranty language, as well as information regarding support for this Product while under warranty is available to Avaya customers and other parties through the Avaya Support website: http://support.avaya.com. Please note that if you acquired the Product(s) from an authorized Avaya reseller outside of the United States and Canada, the warranty is provided to you by said Avaya reseller and not by Avaya. "Software" means computer programs in object code, provided by Avaya or an Avaya Channel Partner, whether as stand-alone products or pre-installed on hardware products, and any upgrades, updates, bug fixes, or modified versions.

Licenses

THE SOFTWARE LICENSE TERMS AVAILABLE ON THE AVAYA WEBSITE, HTTP://SUPPORT.AVAYA.COM/LICENSEINFO ARE APPLICABLE TO ANYONE WHO DOWNLOADS, USES AND/OR INSTALLS AVAYA SOFTWARE, PURCHASED FROM AVAYA INC., ANY AVAYA AFFILIATE, OR AN AUTHORIZED AVAYA RESELLER (AS APPLICABLE) UNDER A COMMERCIAL AGREEMENT WITH AVAYA OR AN AUTHORIZED AVAYA RESELLER. UNLESS OTHERWISE AGREED TO BY AVAYA IN WRITING, AVAYA DOES NOT EXTEND THIS LICENSE IF THE SOFTWARE WAS OBTAINED FROM ANYONE OTHER THAN AVAYA, AN AVAYA AFFILIATE OR AN AVAYA AUTHORIZED RESELLER; AVAYA RESERVES THE RIGHT TO TAKE LEGAL ACTION AGAINST YOU AND ANYONE ELSE USING OR SELLING THE SOFTWARE WITHOUT A LICENSE. BY INSTALLING, DOWNLOADING OR USING THE SOFTWARE, OR AUTHORIZING OTHERS TO DO SO, YOU, ON BEHALF OF YOURSELF AND THE ENTITY FOR WHOM YOU ARE INSTALLING, DOWNLOADING OR USING THE SOFTWARE (HEREINAFTER REFERRED TO INTERCHANGEABLY AS "YOU" AND "END USER"), AGREE TO THESE TERMS AND CONDITIONS AND CREATE A BINDING CONTRACT BETWEEN YOU AND AVAYA INC. OR THE APPLICABLE AVAYA AFFILIATE ("AVAYA").

Copyright

Except where expressly stated otherwise, no use should be made of materials on this site, the Documentation, Software, or hardware provided by Avaya. All content on this site, the documentation and the Product provided by Avaya including the selection, arrangement and design of the content is owned either by Avaya or its licensors and is protected by copyright and other intellectual property laws including the sui generis rights relating to the protection of databases. You may not modify, copy, reproduce, republish, upload, post, transmit or distribute in any way any content, in whole or in part, including any code and software unless expressly authorized by Avaya. Unauthorized reproduction, transmission, dissemination, storage, and or use without the express written consent of Avaya can be a criminal, as well as a civil offense under the applicable law.

Third Party Components

"Third Party Components" mean certain software programs or portions thereof included in the Software that may contain software (including open source software) distributed under third party agreements ("Third Party Components"), which contain terms regarding the rights to use certain portions of the Software ("Third Party Terms"). Information regarding distributed Linux OS source code (for those Products that have distributed Linux OS source code) and identifying the copyright holders of the Third Party Components and the Third Party Terms that apply is available in the Documentation or on Avaya's website at: http://support.avaya.com/Copyright. You agree to the Third Party Terms for any such Third Party Components.

Trademarks

The trademarks, logos and service marks ("Marks") displayed in this site, the Documentation and Product(s) provided by Avaya are the registered or unregistered Marks of Avaya, its affiliates, or other third parties. Users are not permitted to use such Marks without prior written consent from Avaya or such third party which may own the Mark. Nothing contained in this site, the Documentation and Product(s) should be construed as granting, by implication, estoppel, or otherwise, any license or right in and to the Marks without the express written permission of Avaya or the applicable third party.

Avaya is a registered trademark of Avaya Inc.

All non-Avaya trademarks are the property of their respective owners. Linux® is the registered trademark of Linus Torvalds in the U.S. and other countries.

Downloading Documentation

For the most current versions of Documentation, see the Avaya Support website: http://support.avaya.com.

Contact Avaya Support

See the Avaya Support website: http://support.avaya.com for product notices and articles, or to report a problem with your Avaya product. For a list of support telephone numbers and contact addresses, go to the Avaya Support website: http://support.avaya.com, scroll to the bottom of the page, and select Contact Avaya Support.

Japan Denan statement

The following applies to server models 1006r, 1005r, 703t, and 1002rp:

⚠ Warning

Please be aware of the following while installing the equipment:

- Please use the connecting cables, power cord, and AC adaptors shipped with the equipment or specified by Avaya to be used with the equipment. If you use any other equipment, it may cause failures, malfunctioning or fire.
- Power cords shipped with this equipment must not be used with any other equipment. If the above guidelines are not followed, it may lead to death or severe injury.

⚠ 警告

本製品を安全にご使用頂くため、以下のことにご注意ください。

- 接続ケーブル、電源コード、ACアダプタなどの部品は、必ず製品に同梱されております添付品または指定品をご使用ください。添付品・指定品以外の部品をご使用になると故障や動作不良、火災の原因となることがあります。
- 同梱されております付属の電源コードを他の機器には使用しないでください。

上記注意事項を守らないと、死亡や大怪我など人身事故の原因となることがあります。

Japan VCCI statement

The following applies to server models 1006r, 1005r, 703t, 201i, and 1002rp:

この装置は、情報処理装置等電波障害自主規制協議会（VCCI）

の規定に基づくクラスA装置です。この装置を家庭環境で使用

すると電波障害を引き起こすことがあります。この場合には使

用者が適切な対策を取るように要求されることがあります。

This is a Class A product based on the standard of the Voluntary Control Council for Interference by Information Technology Equipment (VCCI). If this equipment is used in a domestic environment, radio disturbance may occur, in which case, the user may be required to take corrective action.

Contents

Chapter 1: Customer service ... 9
- Getting technical documentation ... 9
- Getting product training ... 9
- Getting help from a distributor or reseller ... 9
- Getting technical support from the Avaya Web site ... 10

Chapter 2: Outlining maintenance and diagnostics activities ... 11
- In this chapter ... 11
- 1006r server features ... 11
- Front control panel and features ... 11
- Back panel controls and features ... 14
- Maintenance and diagnostics overview ... 15
- Replacement parts ... 15
- Preparing for maintenance activities ... 16
- Customer Documentation Map ... 16

Chapter 3: Troubleshooting your Avaya CallPilot® system ... 21
- In this chapter ... 21
- Startup diagnostics overview ... 21
- Types of startup diagnostics ... 21
- Basic hardware check ... 22
- Power-On Self-Test diagnostics ... 23
- Interpreting POST diagnostics ... 23
- POST beep codes ... 23
- Interpreting BIOS error messages ... 24
- BIOS error messages ... 25
- What to do when the server fails to boot into service ... 25
- Interpreting hard drive LEDs ... 26
- Performing a hardware shutdown ... 26

Chapter 4: Using Windows online diagnostic tools ... 27
- In this chapter ... 27
- Overview ... 27
- Viewing event logs ... 28
- Types of Windows event logs ... 28
- Using TCP/IP diagnostic tools ... 31
- The ipconfig command ... 31
- ipconfig default ... 31
- ipconfig command syntax ... 31
- The ping command ... 32
- Ping command syntax ... 32
- The tracert command ... 33
- How tracert works ... 33
- Tracert syntax ... 34
- Tracert parameters ... 34
- The arp command ... 35
- ARP command syntax ... 35

ARP command parameters..... 35
The nbtstat command..... 36
Nbtstat command syntax..... 36
nbstat command parameters..... 37
The netstat command..... 38
Netstat command syntax..... 38
netstat command parameters..... 38
Using the chkdsk utility..... 39
Chkdsk utility syntax..... 39
Chksdsk utility parameters..... 39
Chapter 5: Monitoring multimedia hardware..... 41
In this chapter..... 41
Understanding fault management..... 41
Event processing..... 41
Alarm notification..... 42
Component dependencies..... 42
Detecting hardware problems..... 43
Alarm Monitor..... 43
About alarms..... 43
Event Browser..... 44
About events..... 44
Channel and Multimedia Monitors..... 45
Disabling call channels..... 45
The Maintenance screen..... 45
What the Maintenance screen provides..... 46
Maintenance activities for each component..... 48
Viewing component states..... 49
Component states..... 49
Alert icons..... 50
Starting and stopping components..... 50
Stop versus courtesy stop..... 51
Courtesy stop..... 51
Stop..... 51
Components that you can start and stop..... 51
Running integrated diagnostics..... 53
Before you begin..... 53
Components with diagnostic tests available..... 54
Diagnostic tests available for each component..... 54
If a diagnostic test fails or cannot be run..... 54
Viewing the last diagnostics result..... 55
Working with the Multimedia Monitor..... 56
Working with the Channel Monitor..... 57
Chapter 6: Using Avaya CallPilot® system utilities..... 59
In this chapter..... 59
Overview..... 59
Accessing the system utilities..... 60
Diagnostics Tool..... 60

PEP Maintenance utility.... 61
Session Trace.... 61
CallPilot System Monitor.... 63
Channel Monitor tab.... 64
CallPilot services.... 64
DSPs.... 65
DS30X links.... 66
System Info tab.... 66
Legend/Help tab.... 67
Chapter 7: Replacing basic chassis components.... 69
In this chapter.... 69
Removing and replacing the server cover.... 69
Replacing the power supply.... 71
When to hot-swap the power supply.... 71
Replacing a hard drive.... 72
Replacing a fan module.... 74
When to replace a cooling fan module.... 74
Replacing the DVD combo drive.... 75
Requirements.... 75
Replacing memory DIMMs.... 77
Replacing the software feature key.... 79
Chapter 8: RAID operations.... 81
In this chapter.... 81
Outlining RAID functions.... 81
RAID configuring and splitting.... 81
Verifying the RAID firmware.... 82
Configuring RAID controller using Ctrl+G.... 83
Verifying consistency on the drives.... 85
RAID splitting.... 86
RAID synchronization after installing a PEP.... 87
Chapter 9: Replacing or adding voice processing boards.... 89
In this chapter.... 89
M1/Avaya Communication Server 1000 switch connectivity.... 89
Taking safety precautions.... 90
Locating the voice processing boards.... 90
DSP numbering and location.... 91
DSP numbering MPB96 boards.... 91
Replacing an MPB96 board.... 92
Requirements.... 93
Upgrading to high capacity.... 96
Requirements.... 96
Chapter 10: Maintaining the BIOS and system board firmware.... 101
In this chapter.... 101
Configuring the 1006r BIOS and firmware.... 101
When to upgrade the BIOS.... 102
When to reconfigure the BIOS.... 102
Requirements for upgrading or reconfiguring the BIOS.... 102

BIOS settings..... 104
Using system event logs..... 105
Maintaining the onboard video and network cards..... 107
Network card failure..... 107
Video card failure..... 107
Indicators for video card failure..... 107
Index..... 109

Chapter 1: Customer service

Visit the Avaya Web site to access the complete range of services and support that Avaya provides. Go to www.avaya.com or go to one of the pages listed in the following sections.

Navigation

- Getting technical documentation on page 9
- Getting product training on page 9
- Getting help from a distributor or reseller on page 9
- Getting technical support from the Avaya Web site on page 10

Getting technical documentation

To download and print selected technical publications and release notes directly from the Internet, go to www.avaya.com/support.

Getting product training

Ongoing product training is available. For more information or to register, you can access the Web site at www.avaya.com/support. From this Web site, you can locate the Training contacts link on the left-hand navigation pane.

Getting help from a distributor or reseller

If you purchased a service contract for your Avaya product from a distributor or authorized reseller, contact the technical support staff for that distributor or reseller for assistance.

Getting technical support from the Avaya Web site

The easiest and most effective way to get technical support for Avaya products is from the Avaya Technical Support Web site at www.avaya.com/support.

Chapter 2: Outlining maintenance and diagnostics activities

In this chapter

1006r server features on page 11

Maintenance and diagnostics overview on page 15

1006r server features

Note:

To comply with the EU (European Union) RoHS directive, some of the part numbers now contain an E5 or E6 suffix. For example, part number NTRH2014 is now NTRH2014E6. The part numbers in this guide do not contain a suffix.

Front control panel and features

The following diagrams show the front view of the 1006r server chassis.

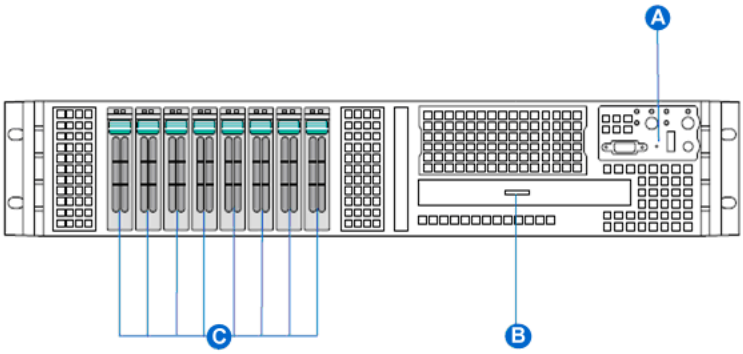

Figure 1: Front panel controls

Label	Control or feature
A	System Control Panel (see figure below for details)
B	Slimline Optical Drive Bay
C	2.5-inch Hard Drive Bays (8)

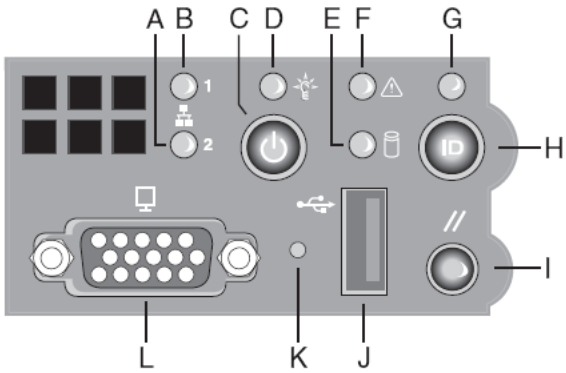

Figure 2: System control panel

Label	Control or feature	Function
A	NIC 2 Activity LED	Continuous green light indicates a link between the system and the network to which it is connected. Blinking green light indicates network activity.
B	NIC 1 Activity LED	
C	Power/Sleep button	Toggles the system power on/off. This button also functions as a sleep button if enabled by an ACPI-compliant operating system.
D	Power/Sleep LED	Continuous green light indicates the system has power applied to it or the system is in ACPI S0 state.

Label	Control or feature	Function
		Blinking green indicates the system is in sleep or ACPI S1 state. No light indicates the power is off or the system is in ACPI S4 or S5 state.
E	Hard disk drive activity LED	Random blinking green light indicates hard disk drive activity. No light indicates no hard disk drive activity.
F	System status LED	Solid green indicates normal operation. Blinking green indicates degraded performance. Solid amber indicates a critical or nonrecoverable condition. Blinking amber indicates a noncritical condition. No light indicates POST is running or the system is off.
G	System identification LED	Solid blue indicates system identification is active. No light indicates system identification is not activated.
H	System identification button	Toggles the front panel ID LED and the server board ID LED on/off. The server board ID LED is visible through the rear of the system and allows for server identification and location when working behind a rack of servers.
I	Reset button	Reboots and initializes the system.
J	USB 2.0 Port	Connector to attach a USB component to the front of the system.
K	NMI button	When the NMI button is pressed with a paper clip or pin, the server is placed in a halt state for diagnostic purposes and allows the issuance of a non-maskable interrupt. After issuing the interrupt, a memory download can be performed to determine the cause of the problem.
L	Video port	Connector to attach a video monitor to the front of the system. The front and rear video ports cannot be used at the same time.

Back panel controls and features

The following diagram shows the back panel controls. The features on the right are the AC power supply banks. The PCI card brackets are in the middle of the back panel while the connectors and ports are along the bottom and left side.

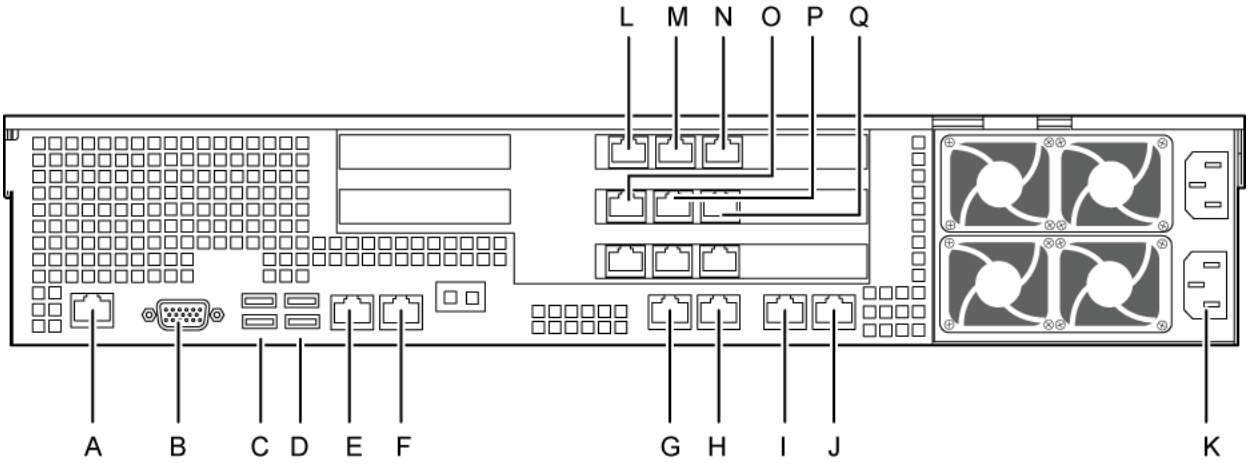

Figure 3: Back panel controls and features

Label	Control or feature	Label	Control or feature
A	RJ-45 Serial A Connector	J	HB2
B	Rear Video	K	Power Receptacles
C	Dual USB port	L	MPB96-1 DS30-3
D	Dual USB port	M	MPB96-1 DS30-2
E	ELAN	N	MPB96-1 DS30-1
F	CLAN	O	MPB96-2 DS30-3
G	HB1	P	MPB96-2 DS30-2
H	Mirror	Q	MPB96-2 DS30-1
I	Not connected		

Maintenance and diagnostics overview

The maintenance and diagnostic activities discussed in this guide are divided into two groups of activities:

- troubleshooting and diagnostics (identifying the cause of system problems and resolving them)
- performing hardware maintenance

This guide is for administrators, technicians, and engineers responsible for maintaining an Avaya CallPilot® server. This guide assumes that you have basic computing skills and are familiar with the necessary safety procedures.

If you cannot resolve your system problems with the resources described in this guide, you can also refer to the Troubleshooting Reference Guide (NN44200-700).

Note:

Avaya continually updates the Troubleshooting Guide. It is available from www.avaya.com/support.

For information about restarting, shutting down, and powering up the Avaya CallPilot server, see the Installation and Configuration Task List (NN44200-306). You can be asked to perform one or more of these tasks while maintaining your server.

Your CallPilot server comes pre-installed with the Windows operating system and CallPilot server software. If your CallPilot server no longer functions because of a software problem, you may need to reinstall the CallPilot software or rebuild the system.

Note:

If you load the firmware on the server, both power supplies and hard drives must be connected and the hard drives must be online. If a failure occurs on any of these components it is not reported by the server LEDs.

Replacement parts

Before replacing any parts on your server, refer to the Avaya product catalog for the part codes.

Caution:

Risk of system damage

The use of parts that are not supplied by Avaya can cause serious system problems or void your Avaya warranty.

Preparing for maintenance activities

Before you proceed with hardware maintenance activities, review the 1006r Server Hardware Installation (NN44200-320) guide for the following information:

- required tools and equipment
- recommended safety precautions for electrostatic discharge, handling cards, and handling your server

Customer Documentation Map

The following diagram shows the overall organization and content of the CallPilot documentation suite.

Table 1: CallPilot Customer Documentation Map

Fundamentals
Avaya CallPilot® Fundamentals Guide (NN44200-100)
Avaya CallPilot® Library Listing (NN44200-117)
Planning and Engineering
Avaya CallPilot® Planning and Engineering Guide (NN44200-200)
Avaya CallPilot® Network Planning Guide (NN44200-201)
Avaya Communication Server 1000 Converging the Data Network with VoIP Fundamentals (NN43001-260)
Solution Integration Guide for Avaya Communication Server 1000/CallPilot®/NES Contact Center/Telephony Manager (NN49000-300)
Installation and Configuration
Avaya CallPilot® Upgrade and Platform Migration Guide (NN44200-400)
Avaya CallPilot® High Availability: Installation and Configuration (NN44200-311)
Avaya CallPilot® Geographic Redundancy Application Guide (NN44200-322)
Avaya CallPilot® Installation and Configuration Task List Guide (NN44200-306)
Avaya CallPilot® Quickstart Guide (NN44200-313)

- Avaya CallPilot® Installer Roadmap (NN44200-314)
- Server Installation Guides
  - Avaya CallPilot® 201i Server Hardware Installation Guide (NN44200-301)
  - Avaya CallPilot® 202i Server Hardware Installation Guide (NN44200-317)
  - Avaya CallPilot® 202i Installer Roadmap (NN44200-319)
  - Avaya CallPilot® 703t Server Hardware Installation Guide (NN44200-304)
  - Avaya CallPilot® 1002rp Server Hardware Installation Guide (NN44200-300)
  - Avaya CallPilot® 1002rp System Evaluation (NN44200-318)
  - Avaya CallPilot® 1005r Server Hardware Installation Guide (NN44200-308)
  - Avaya CallPilot® 1005r System Evaluation (NN44200-316)
  - Avaya CallPilot® 1006r Server Hardware Installation Guide (NN44200-320)
  - Avaya CallPilot® 600r Server Hardware Installation Guide (NN44200-307)
  - Avaya CallPilot® 600r System Evaluation (NN44200-315)
- Configuration and Testing Guides
  - Avaya Meridian 1 and Avaya CallPilot® Server Configuration Guide (NN44200-302)
  - Avaya T1/SMDI and Avaya CallPilot® Server Configuration Guide (NN44200-303)
  - Avaya Communication Server 1000 System and Avaya CallPilot® Server Configuration Guide (NN44200-312)
- Unified Messaging Software Installation
  - Avaya CallPilot® Desktop Messaging and My CallPilot Installation and Administration Guide (NN44200-305)

Administration

- Avaya CallPilot® Administrator Guide (NN44200-601)
- Avaya CallPilot® Software Administration and Maintenance Guide (NN44200-600)
- Avaya Meridian Mail to Avaya CallPilot® Migration Utility Guide (NN44200-502)
- Avaya CallPilot® Application Builder Guide (NN44200-102)
- Avaya CallPilot® Reporter Guide (NN44200-603)

Maintenance

- Avaya CallPilot® Troubleshooting Reference Guide (NN44200-700)

Avaya CallPilot® Preventative Maintenance Guide (NN44200-505)

Server Maintenance and Diagnostics

Avaya CallPilot® 201i Server Maintenance and Diagnostics Guide (NN44200-705)

Avaya CallPilot® 202i Server Maintenance and Diagnostics Guide (NN44200-708)

Avaya CallPilot® 703t Server Maintenance and Diagnostics Guide (NN44200-702)

Avaya CallPilot® 1002rp Server Maintenance and Diagnostics Guide (NN44200-701)

Avaya CallPilot® 1005r Server Maintenance and Diagnostics Guide (NN44200-704)

Avaya CallPilot® 1006r Server Maintenance and Diagnostics Guide (NN44200-709)

Avaya CallPilot® 600r Server Maintenance and Diagnostics Guide (NN44200-703)

Avaya NES Contact Center Manager Communication Server 1000/ Meridian 1 & Voice Processing Guide (297-2183-931)

End User Information

End User Cards

Avaya CallPilot® Unified Messaging Quick Reference Card (NN44200-111)

Avaya CallPilot® Unified Messaging Wallet Card (NN44200-112)

Avaya CallPilot® A-Style Command Comparison Card (NN44200-113)

Avaya CallPilot® S-Style Command Comparison Card (NN44200-114)

Avaya CallPilot® Menu Interface Quick Reference Card (NN44200-115)

Avaya CallPilot® Alternate Command Interface Quick Reference Card (NN44200-116)

Avaya CallPilot® Multimedia Messaging User Guide (NN44200-106)

Avaya CallPilot® Speech Activated Messaging User Guide (NN44200-107)

Avaya CallPilot® Desktop Messaging User Guide for Microsoft Outlook (NN44200-103)

Avaya CallPilot® Desktop Messaging User Guide for Lotus Notes (NN44200-104)

	Avaya CallPilot® Desktop Messaging User Guide for Novell Groupwise (NN44200-105) Avaya CallPilot® Desktop Messaging User Guide for Internet Clients (NN44200-108) Avaya CallPilot® Desktop Messaging User Guide for My CallPilot (NN44200-109) Avaya CallPilot® Voice Forms Transcriber User Guide (NN44200-110)

The Map was created to facilitate navigation through the suite by showing the main task groups and the documents contained in each category. It appears near the beginning of each guide, showing that guide's location within the suite.

Chapter 3: Troubleshooting your Avaya CallPilot® system

In this chapter

Startup diagnostics overview on page 21

Basic hardware check on page 22

Power-On Self-Test diagnostics on page 23

Interpreting BIOS error messages on page 24

What to do when the server fails to boot into service on page 25

Interpreting hard drive LEDs on page 26

Performing a hardware shutdown on page 26

Startup diagnostics overview

This section contains procedures for interpreting the startup diagnostics on the 1006r server.

Types of startup diagnostics

The following types of startup diagnostics are available on the server:

- basic hardware check (front panel LEDs)
- Power-On Self-Test (POST) diagnostics
- SCSI hard drive controller diagnostics or RAID controller diagnostics

These diagnostics are available at initial system startup or after any 1006r server reset.

Basic hardware check

This section describes some basic checks that you can do when you start up the server.

To run the startup test

1. Ensure the system is powered down and the AC cords are disconnected. Wait 5 seconds before applying power again.
2. Apply AC power to the server by plugging in the first AC cord then the second AC cord. Observe the front system control panel display.

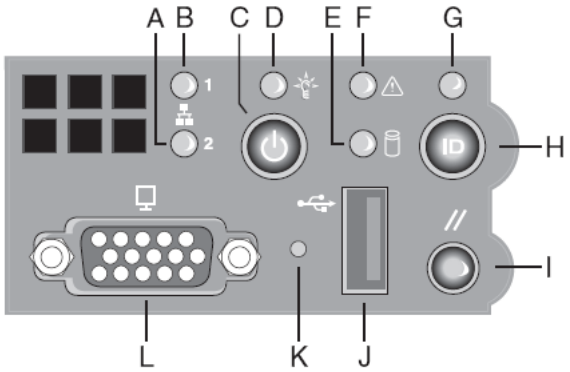

Figure 4: 1006r front panel

Note:

The back panel LEDs on each power supply start blinking green when AC power is applied and turn solid green after a few seconds. When AC power is removed from a power supply, if there is a hardware problem with the supply, or if the supply is not functioning properly, the LED turns amber.

Note:

Refer to Front control panel and features on page 11 for details of the front panel.

3. Boot the server by pressing the power button on the front of the Avaya CallPilot 1006r server.
4. Observe the following server action:
   - The hard drives spin up and the drive activity LED (E) on the front panel indicates drive activity from the on-board hard disk controllers.
5. Check the monitor for any error messages as the server counts RAM and completes a POST.

For more information about POST, see Power-On Self-Test diagnostics on page 23.

Power-On Self-Test diagnostics

The Power-On Self-Test (POST) is a system diagnostic program (stored in the BIOS (Basic Input/Output)) that runs each time the 1006r server starts. The function of the POST is to test system components and display status messages.

To run the POST

1. Power up the Avaya CallPilot® server and monitor.

   Result: After a few seconds, the POST begins to run.

   After the memory test, various screen prompts and messages appear. The screen prompts can be accompanied by a single beep.

2. Observe the screen for any error messages and listen for POST beep codes. When the POST is complete, the server beeps once.

   If the server halts before the POST is finished, the server emits a beep code indicating that a fatal system error requires immediate attention. For more information, see Interpreting POST diagnostics on page 23.

   If the POST can display a message on the monitor, the server emits two beeps as the message appears.

   Record the message that appears on the monitor and the beep code that you hear. This information is useful if you need assistance from your technical support representative.

Interpreting POST diagnostics

This section provides an explanation of the POST diagnostic codes.

POST beep codes

If an error occurs before video initialization, the POST emits beep codes that indicate errors in hardware, software, or firmware.

A beep code is a series of separate tones, each equal in length.

Important:

If your system emits POST beep codes, record the beep code sequence and then call Avaya technical support before attempting to correct the problem. Ensure you have the required system information. Some POST beep codes are fatal and can require that you replace the server.

Table 2: POST error beep codes

Beep count	Error message	Post progress code	Description
3	Memory error	0xE8, 0xEB, 0xED, 0xEE	System halted because a fatal error related to the memory was detected.

The Integrated Baseboard Management Controller (BMC) generates beep codes upon detection of failure conditions. Beep codes are sounded each time the problem is discovered, such as on each power-up attempt, but are not sounded continuously. Each digit in the code is represented by a sequence of beeps whose count is equal to the digit.

Table 3: Integrated BMC beep codes

Beep code	Reason for beep	Associated sensors
1-5-2-1	No CPUs installed or first CPU socket is empty.	CPU missing sensor.
1-5-4-2	Power fault: DC power unexpectedly lost (power good dropout).	Power unit - power unit failure offset.
1-5-4-4	Power control fault (power good assertion timeout).	Power unit - soft power control failure offset.

Interpreting BIOS error messages

When a recoverable error occurs during the POST, an error message appears describing the problem.

Important:

If BIOS error messages appear, record the error messages and then call Avaya technical support before attempting to correct the problem.

BIOS error messages

BIOS error messages appear on the video monitor and are also posted in the Error Manager screen in the BIOS. For further information or decoding of BIOS error messages, contact Avaya support.

What to do when the server fails to boot into service

This section suggests tasks you can perform to determine why the server fails the bootup cycle.

To determine why the server fails to boot to Windows

If Avaya CallPilot fails to boot to Windows, follow these steps:

1. Make a note of any diagnostic codes.
2. Press the power switch to restart the server.
3. View the diagnostic codes for failures during the boot sequence.
4. Retrieve the system event log. Refer to To save system event logs to a USB media drive on page 106.
5. Refer to the Troubleshooting Guide (NN44200-700) for other suggestions. If you still cannot determine the cause of the startup failure, call your Avaya technical support representative.

To determine why CallPilot fails to come into service

If CallPilot fails to come into service, follow these steps:

1. Make a note of any diagnostic codes.
2. Press the power switch to restart the server.
3. View the diagnostic codes for failures during the boot sequence.
4. View the event logs. For instructions, see Viewing event logs on page 28.
5. Refer to the Troubleshooting Guide (NN44200-700) for other suggestions. If you still cannot determine the cause of the startup failure, call your Avaya technical support representative.

Interpreting hard drive LEDs

LED color	Hard drive status
Green/blinking green	Normal
Amber	Critical but recoverable condition. Often during a controlled condition such as a RAID split.
Red	Failure. This LED color is a major event, and the server must be attended to immediately.

Performing a hardware shutdown

If you cannot shut the server down using Windows, press the power switch on the front panel and hold it in for more than 1 second. The server saves all system data and then powers off.

Chapter 4: Using Windows online diagnostic tools

In this chapter

Overview on page 27

Viewing event logs on page 28

Using TCP/IP diagnostic tools on page 31

Using the chkdsk utility on page 39

Overview

This section describes how to access the run-time online diagnostic tools provided by the Windows server software. Use the following tools when a serious problem prevents the use of the Avaya CallPilot® diagnostic tools that are available in Avaya CallPilot Manager:

- Windows Event Viewer
- TCP/IP diagnostics
- chkdsk utility

Caution:

Risk of software corruption

Do not run any utilities that are not documented in this guide.

Viewing event logs

If one or more messages appear on the monitor during the server startup cycle, use the following diagnostic tools to determine what event or fault occurred.

- Hardware system event log
- Windows Event Viewer on the 1006r server
- Avaya CallPilot® Event Browser or Alarm Monitor in CallPilot Manager

Note:

The Event Browser and Alarm Monitor include online Help for events to help you resolve the problem. If you cannot log on to the CallPilot system using a Web browser due to server problems, then use the Windows Event Viewer.

You can view the Hardware system event log by launching the SEL log from the CallPilot server image (Program Files\Intel\SELview).

Types of Windows event logs

Three types of event logs are available from the Windows Event Viewer, as follows:

Log type	Description
System	Logs events by Windows components, including RRAS or other Windows services.
Security	Logs security events, such as logons, logoffs, and illegal access. This option is available to users with Administrative access.
Application	Logs events by application, such as database file errors.

To use the operating system Event Viewer

1. Click Start > Programs > Administrative Tools > Event Viewer.

   Result: The Event Viewer window appears.

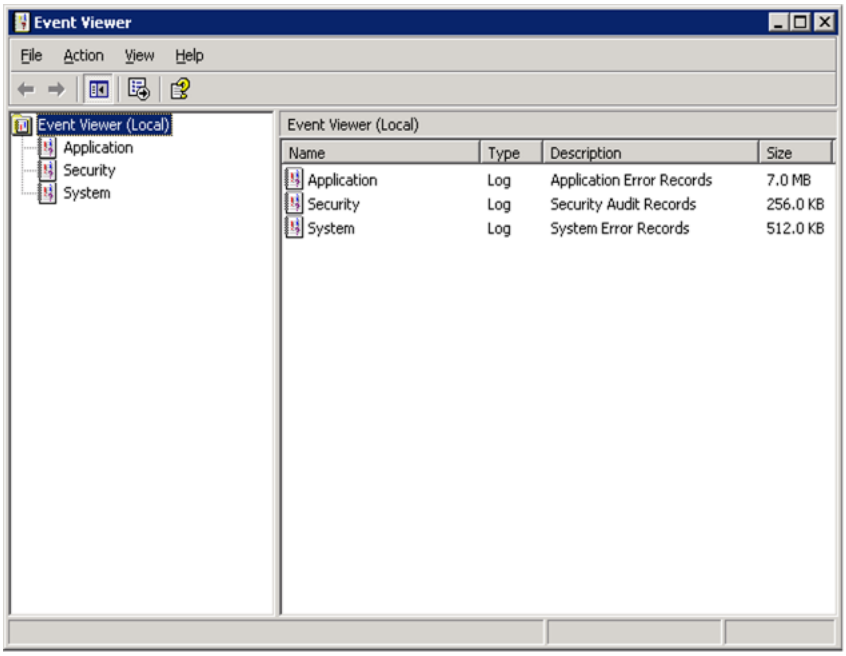

Figure 5: Event Viewer

2. To view a log, click the name of the log in the left pane of the window.

   The following illustration shows an example of the Application log.

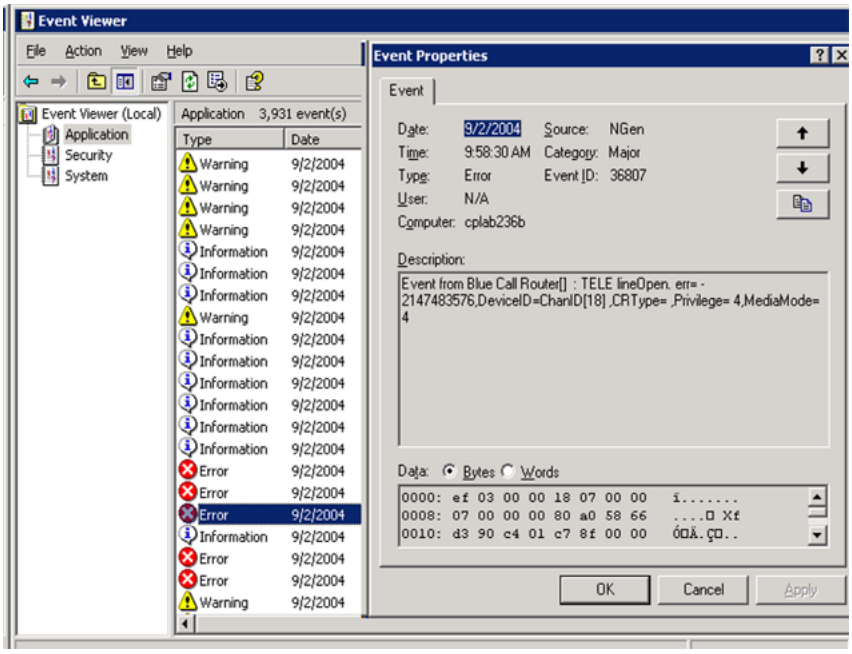

Figure 6: Application log

The following illustration shows an example of the System log.

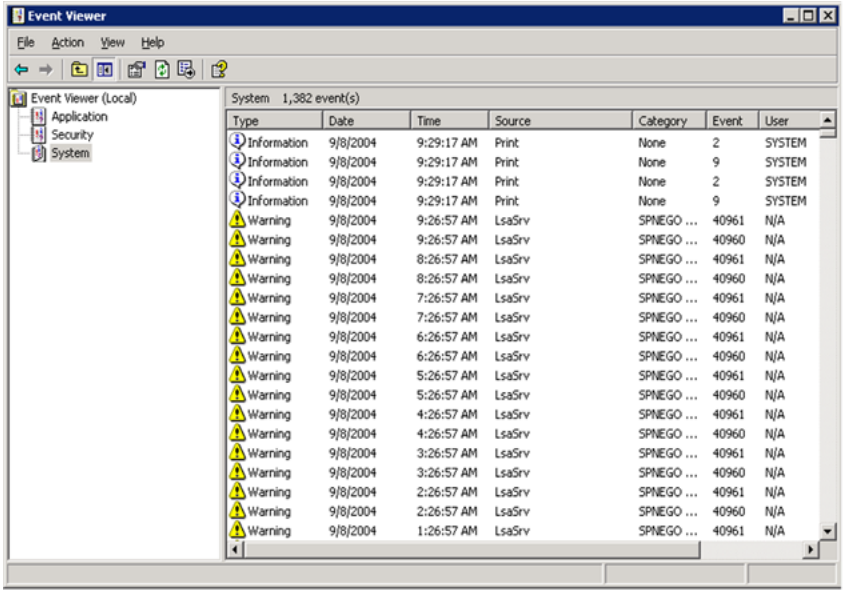

Figure 7: System log

Note:

The Security log, which is available to administrators, is not shown.

3. Look for error codes that are either flagged with thefollowing iconsor that have occurred since the last startup.

Note:

Each error is date- and time-stamped.

Major or critical errors

Minor errors

Information

4. Double-click an error to determine the cause of the error.

   Result: An Event Properties dialog box appears detailing the description of the error. Use the description to help determine how to resolve errors.

Note:

If the error persists or the error description does not suggest a solution, contact your Avaya support representative.

5. Click OK.

   Result: The Event Properties dialog box disappears.

6. Click File > Exit.

Result: The Event Viewer closes.

Using TCP/IP diagnostic tools

This section describes the following TCP/IP diagnostic tools that are available for the network adapter:

- ipconfig
- ping
- tracert
- arp
- nbtstat
- netstat

These utilities help you to verify network connectivity, test the network interface, and isolate any configuration problems.

The ipconfig command

The ipconfig command displays IP configuration information.

ipconfig default

If you run the command without flags, it displays the IP address, subnet mask, and default gateway for each adapter bound to TCP/IP.

ipconfig command syntax

The ipconfig command uses the following syntax:

```
ipconfig /[ ]
```

The following flags are available for the ipconfig command.

Table 4: ipconfig command extensions

Flag	Description
/?	Displays Help information.
/all	Displays full configuration information.
/release	Releases the IP address for the specified adapter.
/renew	Renews the IP address for the specified adapter.

To run the ipconfig command from Windows

1. Click Start > Programs > Accessories > Command Prompt.

   Result: The Command Prompt dialog box appears.
2. Type ipconfig <parameters>.

   Example: ipconfig /all
3. Press Enter.

   Result: The system runs the ipconfig utility.
4. Type Exit to exit the Command Prompt dialog box and return to Windows.

The ping command

The ping command sends an echo request to a specified host. Use this command to verify network connectivity to the remote device.

Ping command syntax

The ping command uses the following syntax:

```
ping [-t] [-a] [-n count] [-l size] [-f] [-i TTL] [-v TOS] [-r count]
[-s count] [[-j host-list] | [-k host-list]] [-w timeout]
destination-list
```

Table 5: ping command extensions

Parameter	Description
-t	Pings the specified host until interrupted.
-a	Resolves addresses to host names.

Parameter	Description
-n count	Specifies the number of echo requests to send.
-l size	Sends buffer size.
-f	Sets Don't Fragment flag in packet.
-i TTL	Specifies the Time To Live.
-v TOS	Specifies the Type Of Service.
-r count	Specifies the number of Record route for count hops.
-s count	Specifies the number of Time stamp for count hops.
-j host-list	Specifies the Loose source route along host list.
-k host-list	Specifies the Strict source route along host list.
-w timeout	Specifies the Timeout in milliseconds to wait for each reply.

To run the ping command from Windows

1. Click Start > Programs > Accessories > Command Prompt.

   Result: The Command Prompt dialog box appears.
2. Type ping <destination IP address> (for example, ping 200.286.32.0) or ping <computer name>.
3. Press Enter.

   Result: The system displays the ping results.
4. Type Exit to exit the Command Prompt dialog box and return to Windows.

The tracert command

This utility determines the route taken to a destination.

How tracert works

The tracert utility follows several steps to complete its task:

- Tracert sends Internet Control Message Protocol (ICMP) echo packets with varying Time-To-Live (TTL) values to the destination.
- Each router along the path must decrement the TTL on a packet by at least 1 before forwarding it, so the TTL is effectively a hop count.

- When the TTL on a packet reaches 0, the router sends back an ICMP Time Exceeded message to the source system.
- Tracert determines the route by sending the first echo packet with a TTL of 1, and incrementing the TTL by 1 each subsequent transmission until the target responds or the maximum TTL is reached.
- Tracert then examines the ICMP Time Exceeded messages sent back by intermediate routers.

Tracert syntax

The tracert command uses the following syntax:

```
tracert [-d] [-h maximum_hops] [-j host_list] [-w timeout]
[target_name]
```

Tracert parameters

The following table shows the tracert parameters.

Table 6: Tracert parameters

Parameter	Description
-d	Specifies not to resolve addresses to host names.
-h maximum_hops	Specifies the maximum number of hops to search for the target.
-j host-list	Specifies a loose source route along the host list.
-w timeout	Waits the number of milliseconds specified by the timeout for each reply.
target_name	Specifies the name of the target host.

To run the tracert command from Windows

1. Click Start > Programs > Accessories > Command Prompt.

   Result: The Command Prompt dialog box appears.
2. Type the following command:

   ```
   tracert [-d] [-h maximum_hops] [-j host_list] [-w timeout]
   [target_name]
   ```

   Example: tracert 200.286.0.32

3. Press Enter.

   Result: The system runs the tracert utility.
4. Type Exit to exit the Command Prompt dialog box and return to Windows.

The arp command

The arp command displays and modifies the IP-to-physical address translation tables used by Address Resolution Protocol (ARP).

ARP command syntax

The ARP command uses the following syntax:

```
arp -s inet_addr eth_addr [if_addr]
arp -d inet_addr [if_addr]
arp -a [inet_addr] [-N if_addr]
```

ARP command parameters

Table 7: ARP command parameters

Parameter	Description
-a	Displays current arp entries by interrogating the current protocol data. If inet_addr is specified, the IP and physical addresses for the specified computer appear. If more than one network interface uses arp, entries for each arp table appear.
-g	Same as -a.
inet_addr	Specifies an Internet address.
if_addr	Specifies the Internet address of the interface where the address translation table can be modified. If not present, the first applicable interface is used.
eth_addr	Specifies a physical address.

Parameter	Description
-N if_addr	Displays the arp entries for the network interface specified by if_addr.
-d	Deletes the host specified by inet_addr.
-s	Adds the host and associates the Internet address inet_addr with the physical address eth_addr. The physical address is given as six hexadecimal bytes separated by hyphens. The entry is permanent.

To run the arp command from Windows

1. Click Start > Programs > Accessories > Command Prompt.

   Result: The Command Prompt dialog box appears.
2. Type arp with the required parameters (for example, arp -g 200.286.0.32).
3. Press Enter.

   Result: The system runs the arp command.
4. Type Exit to exit the Command Prompt dialog box and return to Windows.

The nbtstat command

The nbtstat command displays protocol statistics and current TCP/IP connections using NBT.

Nbtstat command syntax

The nbtstat command uses the following syntax:

```
nbtstat [-a remotename] [-A IP address] [-c] [-n] [-R] [-r] [-S] [-s]
[interval]
```

nbstat command parameters

Table 8: nbstat command parameters

Parameter	Description
-a remotename	Lists the remote computer name table using its name.
-A IP address	Lists the remote computer name table using its IP address.
-c	Lists the contents of the NetBIOS name cache giving the IP address of each name.
-n	Lists local NetBIOS names. Registered indicates that the name is registered by broadcast (Bnode) or WINS (other node types).
-R	Reloads the LMHOSTS file after purging all names from the NetBIOS name cache.
-r	Lists name resolution statistics for Windows networking name resolution Windows computer configured to use WINS, this option returns the number of names resolved and registered through broadcast or through WINS.
-S	Displays both client and server sessions, and lists the remote hosts by IP address.
-s	Displays both client and server sessions and attempts to convert the remote host IP address to a name using the HOSTS file.
interval	Displays selected statistics, pausing interval seconds between each display. Press Ctrl+C to stop displaying statistics. Without this parameter, nbtstat prints the current configuration information once.

To run the nbtstat command from Windows

1. Click Start > Programs > Accessories > Command Prompt.

   Result: The Command Prompt dialog box appears.
2. Type nbtstat with the required parameters.
3. Press Enter.

   Result: The system runs the nbtstat utility.
4. Type Exit to exit the Command Prompt dialog box and return to Windows.

The netstat command

The netstat command displays current TCP/IP network connections and protocol statistics.

Netstat command syntax

The netstat command uses the following syntax:

```
netstat [-a] [-e] [-n] [-s] [-p proto] [-r] [interval]
```

netstat command parameters

Table 9: netstat command parameters

Parameter	Description
-a	Displays all connections and listening ports.
-e	Displays Ethernet statistics. This can be combined with the -s option.
-n	Displays addresses and port numbers in numeric form.
-s	Displays statistics for each protocol.
-p proto	Shows connections for the protocol specified by proto. Proto can be tcp or udp. If used with the -s option, proto can be tcp, udp, or ip.
-r	Displays the contents of the routing table.
interval	Re-displays selected statistics, pausing between each display. Press Ctrl +C to stop re-displaying.

To run the netstat command from Windows

1. Click Start > Programs > Accessories > Command Prompt.

   Result: The Command Prompt dialog box appears.
2. Type netstat with the required parameters.
3. Press Enter.

   Result: The system runs the netstat utility.
4. Type Exit to exit the Command Prompt dialog box and return to Windows.

Using the chkdsk utility

The chkdsk utility checks a specified disk on the server and displays a status report. You can run the utility on drives C, D, E, or F. It is an online utility, but it reduces system performance while it runs.

The chkdsk utility checks for errors at the Windows file system level. CallPilot can be affected by errors at both the Windows and CallPilot file system levels. The chkdsk utility does not detect CallPilot file system level errors.

Note:

A version of this utility, called autocheck, automatically runs during Windows startup. Output from this utility appears on the blue startup screen.

Chkdsk utility syntax

The chkdsk utility uses the following syntax:

```
chkdsk [drive:][path]filename] [/F] [/V] [/R]
```

Chksdsk utility parameters

Table 10: Chksdsk utility parameters

Parameter	Description
drive:	Drive letter of the drive that you want to check.
filename	Names of files to check for fragmentation.
/F	Optional parameter to fix errors on the disk.
/V	Optional parameter to display the full pathname of every file on the disk.
/R	Optional parameter to locate bad sectors and to recover readable information.

To run the chkdsk utility from Windows

1. Click Start > Programs > Accessories > Command Prompt.

Result: The Command Prompt dialog box appears.

2. Type chkdsk <drive letter:> (for example, chkdsk c:).
3. Press Enter.

   Result: The system runs the chkdsk utility.
4. Type Exit to exit the Command Prompt dialog box and return to Windows.

Chapter 5: Monitoring multimedia hardware

In this chapter

Understanding fault management on page 41

Alarm Monitor on page 43

Event Browser on page 44

Channel and Multimedia Monitors on page 45

The Maintenance screen on page 45

Viewing component states on page 49

Starting and stopping components on page 50

Running integrated diagnostics on page 53

Viewing the last diagnostics result on page 55

Working with the Multimedia Monitor on page 56

Working with the Channel Monitor on page 57

Understanding fault management

Fault management is a subsystem within Avaya CallPilot® that detects and notifies you of potential or real hardware problems with the multimedia hardware. Avaya CallPilot monitors events in the multimedia hardware and raises an alarm when a fault occurs.

Event processing

An event is any change in system configuration or operational state. An event is also any action taken by the system that requires user notification such as a faulty MPB96 board switching to disabled status.

All events are reported to the fault management server. The fault management server lets the CallPilot server listen and respond to its clients. The interaction is called event processing and the server detects hardware faults in the multimedia hardware.

Alarm notification

Alarms are warnings generated by events. Alarms communicate the same information as events. However, alarms are reported in the Alarm Monitor instead of the Event Browser and are managed differently than events.

When an alarm appears in the Alarm Monitor, you must investigate the problem, isolate it, and then fix the cause of the problem. When you fix the problem, the alarm is cleared from the Alarm Monitor.

Component dependencies

The status of some components is dependent on the operational status of other components. If a component fails or is stopped, the dependent components go out of service.

Note:

The components in your system are based on your CallPilot server type and switch type. Disregard dependencies for components not in your system.

Component	Dependent components
Media bus	All MPBs, all multimedia channels, and all call channels.
MPB board	All multimedia and call channels associated with the MPB board.
Time switch	All multimedia and call channels associated with the same MPB as the time switch.
MPB96	All multimedia channels on the MPB96 board.
DS30X or DS30	All DS30X or DS30 channels associated with the DS30X or DS30 link.

Detecting hardware problems

Typically, you first become aware of a hardware problem when an alarm is raised. All hardware faults produce an alarm (or series of alarms, depending on the problem) in the Alarm Monitor.

Other indications of a hardware problem include the following:

- user complaints
- call processing difficulties, such as busy signals, static, dropped calls, connection problems, and cross talk (hearing other conversations)
- system administrator logon difficulties
- alert icons on the Maintenance screen

Alarm Monitor

Use the Alarm Monitor to investigate one or more raised alarms.

About alarms

Alarms are warnings generated by events. Alarms communicate the same information as events. However, alarms are reported in the Alarm Monitor instead of the Event Browser and are managed differently than events:

- Alarms appear in the Alarm Monitor for Minor, Major, and Critical events (not Information events). All events can be reported in the Event Browser (depending on the filtering criteria defined in the Event Browser).
- The first time an event occurs, it generates an alarm that appears in the Alarm Monitor. If the same event continues to occur, a new alarm is not generated. Instead, the time and date assigned to the original generated alarm is updated.
- Alarms can be cleared from the Alarm Monitor, but the event that generated the alarm is not cleared from the event log or the Event Browser.

Each alarm in the Alarm Monitor has Help text that often provides a solution to the problem. If the solution is not apparent, use the Event Browser or the Maintenance screen to further investigate the problem.

To investigate using the Alarm Monitor

1. Run CallPilot Manager and log on.
2. In CallPilot Manager, click System > Alarm Monitor.

   Result: The Alarm Monitor screen appears.
3. Click the Event Code for the first Critical or Major alarm.

   Result: A description of the event appears in a new Web browser window.
4. Review the description and recovery action.
5. Repeat steps 3 on page 44 and 4 on page 44 for more alarms, if necessary.
6. If the solution to the problem is not apparent, make a note of the event codes and continue the investigation by using the Event Browser (see Event Browser on page 44).

Event Browser

Use the Event Browser to investigate a series of events that occurred around the time an alarm was raised. The event listing can help you determine the root cause of a problem.

About events

The Event Browser displays events that are recorded in the server log. Each event identifies the time the event occurred, the object that generated the event, and the cause of the event.

Events are classified as Information, Minor, Major, or Critical. By default, the Event Browser displays the latest 100 critical events.

To investigate using the Event Browser

1. Run CallPilot Manager and log on.
2. In CallPilot Manager, click System > Event Browser.

   Result: The Event Browser screen appears.
3. Click an event that appears to be related to the problem, or click an event that occurred near the time the alarm was raised.

   Result: A description of the event appears in a new Web browser window.
4. View the description and recovery action.

5. Repeat steps 3 on page 44 and 4 on page 44 for more events, if necessary.
6. If the solution to the problem is not apparent, contact your Avaya technical support representative.

Note:

For information about how to use the Event Browser, see the CallPilot Manager online Help.

Channel and Multimedia Monitors

The Channel Monitor shows the status of call channels. The call channels are the connections between the server and the switch that carry the call signals to CallPilot.

The Multimedia Monitor shows the status of multimedia channels. The multimedia channels are the DSP ports that process the calls. They are the voice, fax, and speech recognition channels.

Disabling call channels

If you must take the CallPilot system out of service to perform software or hardware maintenance, Avaya recommends that you disable all call channels first. There are two ways to disable the call channels:

- Courtesy stop the channels (preferred method).

  When you courtesy stop call channels, CallPilot waits until the channels are no longer active before disabling them, instead of suddenly terminating active calls.

- Stop the channels.

  When you stop channels, you suddenly disable them and terminate all active calls.

The Maintenance screen

Use the Maintenance screen in CallPilot Manager to do the following:

- Obtain general information about components.
- View component states.
- Start and stop components.

- Run integrated diagnostic tests.
- View the results of the last diagnostic test run against a component.

What the Maintenance screen provides

The Maintenance screen identifies the server platform and switch connectivity type. It also provides a navigation tree that, when expanded, lists the physical and logical hardware components down the left side of the screen. To list the server hardware components, click the plus sign (+) at the top of the tree. To list the subcomponents for each component, click the plus sign (+) beside the component.

Note:

The components that are listed on the Maintenance screen are based on the CallPilot server type and the switch that is connected to CallPilot. The examples in this chapter are for illustration purposes and may not appear exactly the same as your system.

The Maintenance screen below shows a partially expanded tree for the 1006r server.

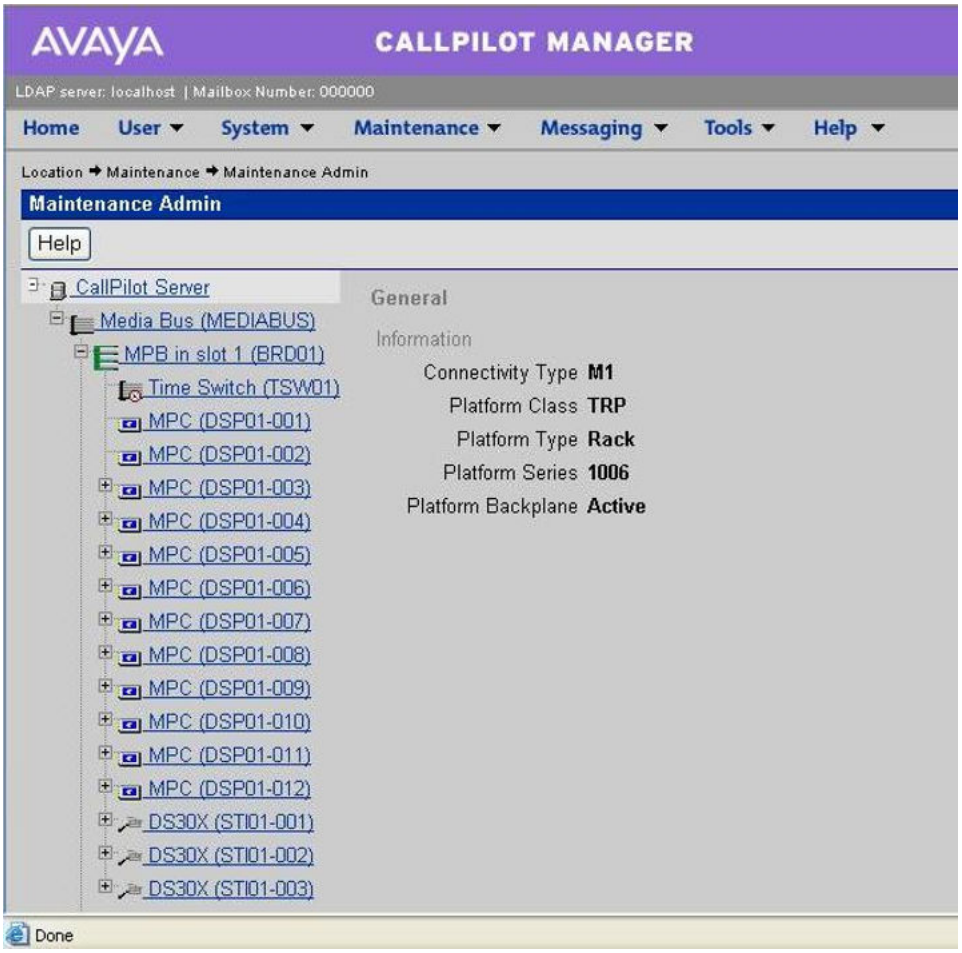

When you click a component, the screen refreshes to show the details about that component. Details are divided into the sections described in the following table.

Table 11: Component sections

Section	Description
General	This section shows general technical information about the selected component. This typically includes the following details: • the name, class, type, series, or version of a component • various capabilities of a component (for example, whether a component is removable) **Note:** This section does not appear for all components.
Maintenance	This section shows the state of the selected component. Use this section to start and stop a component before running a diagnostic test. For more information about working with component states, see the following sections:

Section	Description
	• Viewing component states on page 49 • Starting and stopping components on page 50
Diagnostics	Use the Diagnostics section to run one or more diagnostic tests, or to view the results of the last diagnostic tests that were run on the selected component. For more information about running diagnostics, see the following sections: • Running integrated diagnostics on page 53 • Viewing the last diagnostics result on page 55

Maintenance activities for each component

The following table identifies the maintenance activities you can perform for each component that is listed in the component tree.

Table 12: Maintenance activities

Component	Start / stop?	Courtesy stop?	Diagnostics available?	Replaceable?
Media Bus	Yes	No	No	No
MPB96 board	Yes	No	Yes	Yes
Time Switch	No	No	No	No
DSPs (embedded MPB boards)	Yes	No	Yes	No (embedded)
Multimedia channels	Yes	Yes	No	No
Call channels	Yes	Yes	No	No
DS30 link	Yes	No	No	No

Note:

The MGate card and CAT5 cable are replaceable. If you are having problems with the DS30 link, determine if either one or both of these items are causing the problem and need to be replaced.

Viewing component states

View a component state to determine the general condition of the component, including whether the component is disabled or off duty. The component state is shown in the Maintenance section of the Maintenance screen.

Component states

You can determine the state of a component by looking at the State box in the Maintenance section.

State	Description
Active	The component is working and currently involved in processing a call.
Disabled	The diagnostic failed.
Idle	The component is working but not currently involved in processing a call.
InTest	A diagnostic is running on the resource or device.
Loading	The component has started and takes it out of the Off Duty state. This state occurs quickly and is immediately followed by Idle.
No resources	The hardware required for the component to operate is not installed or is not operating properly.
Not Configured	The device is not configured in CallPilot. For example, a DSP is not being used because it was not allocated in the Configuration Wizard.
Off Duty	The component has been stopped.
Remote Off Duty	The component has been taken out of service at the switch.
Shutting Down	The component is in the process of stopping. This state occurs quickly and is immediately followed by Off Duty.
Uninitiated	The call processing component has not initialized the resource.

Alert icons

If one of the following icons appears next to a component in the tree, then the component or one of its subcomponents is experiencing a problem:

Icon	Description
	A problem exists with a subcomponent of the selected component. Expand the tree to locate the subcomponent with the problem.
	A problem exists with the selected component.

To view the state of a hardware component

1. Run CallPilot Manager and log on.
2. In CallPilot Manager, click Maintenance > Maintenance Admin.

   Result: The Maintenance screen appears.
3. Click the plus signs (+) beside the CallPilot server to expand the component tree.
4. Continue clicking the plus sign (+) until the component you want to work with is visible.
5. Click the hardware component you want to work with.

   Result: The Maintenance screen refreshes to show details about the component.
6. Scroll down to the Maintenance section.
7. View the state of the selected component in the State box.

Starting and stopping components

When you stop a component, you take it out of service and prevent it from operating. You must stop a component before you can replace it (if the component is replaceable) or run a diagnostic test on it.

To bring an out-of-service component back into service, you must start it.

Start and stop components from the Maintenance section on the Maintenance screen.

Important:

Avaya recommends that, if possible, you courtesy stop a component. Courtesy stop is available at the individual channel level.

To courtesy stop CallPilot, use the following:

- Multimedia Monitor - to courtesy stop a range of multimedia channels
- Channel Monitor - to courtesy stop a range of call (DS30X, also known as DS0) channels

Stop versus courtesy stop

The following two methods of taking a component out of service allow you to choose how active calls are affected.

Courtesy stop

A courtesy stop takes the component out of service after the component finishes processing the active calls.

- If the component is currently processing a call, the call is not dropped; the component remains active until the call is finished.
- If the component is not currently in use, it is taken out of service immediately.

Courtesy stop is the preferred method for taking a component out of service.

Stop

A stop takes the component out of service immediately, regardless of whether the component is currently processing calls. All active calls are dropped. Typically, you perform a stop only when severe problems that are affecting a large number of incoming calls occur or if your organization determines a special need for it.

Components that you can start and stop

Only the following components can start and stop.

Note:

If you want to start or stop more than one or two multimedia (DSP) or call (DS30X) channels, use the Multimedia Monitor or Channel Monitor.

Component	Effect of stopping
Media Bus	Takes all call processing resources out of service.
MPB board	Takes all call processing resources on the selected board out of service.
Time switch	You cannot perform maintenance administration on the time switch.
Multimedia Channel	Takes the selected multimedia channel out of service.
Channels	Takes the selected DS30X channel out of service.
DS30X link	Takes the selected DS30X link out of service.

To start or stop a component

1. Run CallPilot Manager and log on.
2. In CallPilot Manager, click Maintenance > Maintenance Admin.

   Result: The Maintenance screen appears.
3. Click the plus sign (+) beside the CallPilot server to expand the component tree.
4. Continue clicking the plus signs (+) until the component you want to work with is visible.
5. Click the hardware component that you want to start or stop.

   Result: The Maintenance screen refreshes to show details about the component.
6. Scroll down to the Maintenance section.
7. Click Courtesy Stop or Start as required.

Button	Description
Start	If the selected component is out of service, click this button to put it into service.
Courtesy Stop	Click this button to take the selected component out of service. CallPilot waits for calls to be completed before disabling the component.

Button	Description
	Important: If you are courtesy stopping all components (that is, you are taking the entire system down), ensure that you inform all administrators, desktop messaging users, and Web messaging users so that they can log off their sessions before you proceed. The system asks you to confirm the courtesy stop. If you click OK, the component is put out of service after all calls are finished.
Stop	Click this button to take the selected component out of service immediately. All calls that are in progress are disconnected immediately. **Important:** If you are stopping all components (that is, you are taking the entire system down), ensure that you inform all administrators, desktop messaging users, and Web messaging users so that they can log off their sessions before you proceed.

Running integrated diagnostics

Run diagnostic tests from the Diagnostics section on the Maintenance screen in the following circumstances:

- You want to ensure that a component is operating properly after installing or reinstalling it.
- The CallPilot server is having trouble processing incoming calls and you are hoping that diagnostic results can tell you why.

  Problems include static, dropped calls, and cross talk (hearing another conversation).

Before you begin

Important:

Take the component out of service before you run the diagnostic test. See Starting and stopping components on page 50.

Components with diagnostic tests available

The following table identifies the components on which you can run diagnostics.

Component	Diagnostics available?	Replaceable?
Media Bus (CTBus cable)	Tested by MPB diagnostics.	Yes
MPB96 board	Tested by MPB diagnostics	Yes
Time switch	Tested indirectly. No specific diagnostics. LED on top of MPB board indicates fault.	Yes, by replacing the MPB96 board.
Multimedia channels	Tested by MPB diagnostics	Yes, by replacing the MPB96 board.
DS30 link (cable)	Status LED on MPB card bracket. If the LED is off, this indicates a bad cable. If the LED is blinking, this indicates clocking problems.	Yes

Diagnostic tests available for each component

The diagnostic tests that are available for each component are listed in the Diagnostic section of the Maintenance screen. To view the list of diagnostic tests for a particular component, click the component in the component tree.

If a diagnostic test fails or cannot be run

If a warning message appears, you cannot run the diagnostic test because a prerequisite condition has not been met. If a diagnostic test fails, a message appears in a new browser window.

In both cases, check the Alarm Monitor to determine the reason and the appropriate action to take.

If the Alarm Monitor and Event Browser do not provide a solution to a hardware problem, you may need to replace or service a component. If the problem is with a component that is not replaceable because it is not a physical entity (such as the Time Switch), you must either replace its parent component or contact your Avaya technical support representative, depending on the component.

To run a diagnostic test

1. **Important:**

   Avaya recommends that you courtesy stop rather than stop a component if possible. For instructions, see Starting and stopping components on page 50.

   Run CallPilot Manager and log on.
2. In CallPilot Manager, click Maintenance > Maintenance Admin.

   Result: The Maintenance screen appears.
3. Click the plus sign (+) beside the CallPilot server to expand the component tree.
4. Continue clicking the plus signs (+) until the component you want to work with is visible.
5. Click the hardware component for which you want to run diagnostics with.

   Result: The Maintenance screen refreshes to show details about the component.
6. Scroll down to the Maintenance section, and ensure that the component is out of service.
7. Scroll down to the Diagnostics section.
8. Select the check box for each diagnostic that you want to run.

   Note:

   If you want to run all of the diagnostics, select the Diagnostic Description check box at the top of the list.
9. Click Run.

   Result: A new Web browser window appears with the progress and results of the diagnostics.

   Note:

   The Diagnostic Results box in the Diagnostics section appears when you click Get Last Result.

Viewing the last diagnostics result

You can review the results of diagnostics by clicking the Get Last Results button for a component.

To view the last diagnostics result

1. **Important:**

   Avaya recommends that you courtesy stop rather than stop a component if possible. For instructions, see Starting and stopping components on page 50.

   Run CallPilot Manager and log on.
2. In CallPilot Manager, click Maintenance > Maintenance Admin.

   Result: The Maintenance screen appears.
3. Click the plus sign (+) beside the CallPilot server to expand the component tree.
4. Continue clicking the plus signs (+) until the component you want to work with is visible.
5. Click the hardware component for which you want to run diagnostics with.

   Result: The Maintenance screen refreshes to show details about the component.
6. Scroll down to the Diagnostics section.
7. Select the check box for each diagnostic for which you want to review results.
8. Click Get Last Result.

   Result: The results appear in the Diagnostic Results box with the following information:

   - diagnostic title
   - diagnostic result: pass or fail
   - the date and time the test was completed

Working with the Multimedia Monitor

The Multimedia Monitor shows the status of multimedia channels. The multimedia channels are the DSP ports that process the calls. They are the voice, fax, and speech recognition channels.

To view or work with multimedia channel states

1. Run CallPilot Manager and log on.
2. In CallPilot Manager, click Maintenance > Multimedia Monitor.

   Result: The Multimedia Monitor screen appears, showing the channels associated with each DSP.

Note:

For an explanation of the channel states, see the CallPilot Manager online Help.

3. Do one of the following:

IF you want to stop or start	THEN
all of the channels associated with a DSP	select the check box to the left of the DSP that you want to stop or start. Repeat this step for each DSP.
only one or several channels that are associated with a DSP	select the check box for each channel that you want to stop or start.

4. Click Courtesy Stop or Start as required.

   Result: If you click Courtesy Stop or Start, you are asked to confirm the Courtesy Stop or Start. Click OK.

   The selected channels change to off-duty or idle status, according to the action you chose.

   Note:

   If the buttons are not available, wait a few seconds for the screen to refresh.

Working with the Channel Monitor

The Channel Monitor shows the status of call channels. The call channels are the connections between the server and the switch that carry the call signals to CallPilot.

To view or work with call channel states

1. Run CallPilot Manager and log on.
2. In CallPilot Manager, click Maintenance > Channel Monitor.

   Result: The Channel Monitor screen appears, showing the DS30X (also known as DS0) channels associated with each DS30X link.

   Note:

   For an explanation of the channel states, see the CallPilot Manager online Help.

3. Do one of the following:

IF you want to stop or start	THEN
all of the channels associated with a DS30 link	select the check box to the left of the DS30 link that you want to stop or start. Repeat this step for each DS30 link.
only one or several channels that are associated with a DS30 link	select the check box for each channel that you want to stop or start.

4. Click Courtesy Stop or Start as required.

   Result: If you click Courtesy Stop or Start, you are asked to confirm the Courtesy Stop or Start. Click OK.

   The selected channels change to off-duty or idle status, according to the action you chose.

   Note:
   If the buttons are not available, wait a few seconds for the screen to refresh.

Chapter 6: Using Avaya CallPilot® system utilities

In this chapter

Overview on page 59

Diagnostics Tool on page 60

PEP Maintenance utility on page 61

Session Trace on page 61

CallPilot System Monitor on page 63

Overview

The following table lists the CallPilot system utilities.

Utility	Description
Diagnostics Tool	Allows CallPilot startup diagnostics to be enabled or disabled (turned on or off).
PEP Maintenance	Displays a list of installed PEPs and enables PEP removal.
Session Trace	Displays detailed information about the activity in a user's mailbox and the state of the message waiting indicator (MWI).
CallPilot System Monitor	Displays the following information: • the status of all CallPilot channels • the status of all CallPilot services

Note:

This status is more accurate than the status provided in the Services Control Panel.

- particulars about the CallPilot system, such as names, keycodes, serial numbers, IP addresses, and system numbers

Accessing the system utilities

You can access all CallPilot utilities from the CallPilot server in the Start > Programs > CallPilot > System Utilities menu.

Diagnostics Tool

Use the Diagnostics Tool to enable or disable CallPilot startup diagnostics. CallPilot startup diagnostics automatically identify hardware problems that can exist when the system and its services are started. When you disable startup diagnostics, you can save time during system maintenance operations where restarts or call processing services restarts are required. There are three recommended steps:

- Use the Diagnostics Tool to turn off CallPilot startup diagnostics.
- Perform system maintenance.
- Use the Diagnostics Tool to turn on CallPilot startup diagnostics.

To access the Diagnostics Tool

On the Windows desktop, click Start > Programs > CallPilot > System Utilities > Diagnostic Tool.

Result: The Diagnostics Tool dialog box appears.

To enable startup diagnostics

From the Diagnostics Tool dialog box, select Configuration > Maintenance Startup Diag > Enable.

To disable startup diagnostics

Important:

Avaya recommends that you leave the startup diagnostics turned on. When you disable CallPilot startup diagnostics, you prevent CallPilot from automatically

identifying hardware problems that can exist when the system and its services are started (for example, DSP, time switch, or Media Bus).

On the Diagnostics Tool dialog box, select Configuration > Maintenance Startup Diag > Disable.

PEP Maintenance utility

The PEP Maintenance utility displays a list of all installed PEPs on the server and lets you uninstall PEPs. For information about installing or uninstalling PEPs, see the Installation and Configuration Task List (NN44200-306).

To access the PEP Maintenance utility

From the Windows desktop, click Start > Programs > CallPilot > System Utilities > PEP Maintenance Utility.

Result: The DMI Viewer dialog box appears.

To view a list of all installed PEPs

1. Click the component for which you want to display the PEP list.
2. Click Show PEPs.

   Result: A list of all installed PEPs appears in the left pane.
3. If you want to review the readme file associated with a PEP, click the PEP, and then click Read.

   Result: The readme file appears in Notepad.

Session Trace

The Session Trace tool displays detailed information about the activity in a user's mailbox and the state of the message waiting indicator (MWI). The session information includes:

- voice messaging
- call answering
- express messaging activity (messages composed and sent or left in a mailbox)
- the number of messages played or unplayed at the beginning, middle, and end of a session
- the number of deleted read messages
- the number of deleted unread messages

- messages and personal distribution lists restored to a mailbox
- the last change to the MWI (turned on or off, or untouched)

With the Session Trace information, an administrator or technician can study the state of a user's mailbox and MWI to track user complaints. For example, a user can complain that the MWI is on, but no voice messages are in the mailbox when the user logs on. The session information can tell the administrator why the MWI is turned on.

To access the session trace tool

From the Windows desktop, click Start > Programs > CallPilot > System Utilities > Session Trace Tool.

Result: The MCE Session Trace dialog box appears.

To find a session

1. From the Session Type list, choose the type of session. To display a list of all session types, select All Session Types.
2. Enter as much information in the search criteria boxes to identify the session you want to view. To display a list of all users for the selected session type, leave the search criteria boxes blank.
3. Click Search to initiate the search.
    a. If you did not enter any user information, a list of users matching the session type appears at the bottom of the window. To select a user from the list, double-click the user name to display session type information.
    b. If you selected All Session Types for a user, the session type information appears in the right of the window.
4. Double-click the session type to display the session information.

   Result: The session type information appears at the bottom of the window. The following example shows Call Answering session type information.

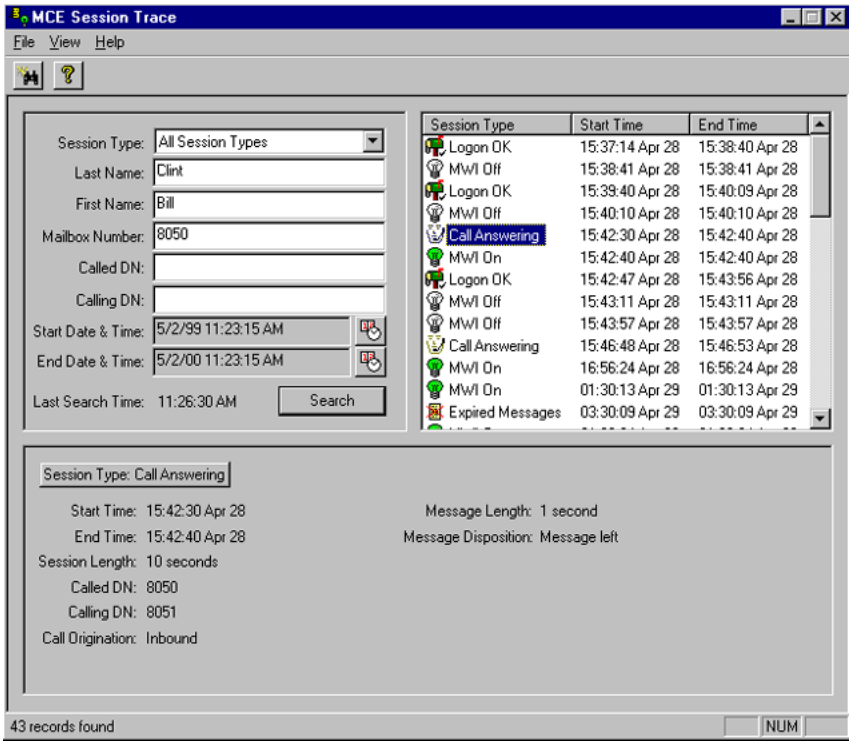

Figure 8: Call Answering session

CallPilot System Monitor

The System Monitor consists of three tabs, as described in the following table.

Table 13: System Monitor tabs

Tab	Description
Channel Monitor	Shows the status of all CallPilot services, multimedia channels, and call channels (DS30X channels).
System Info	Displays details about the CallPilot system, such as features purchased, keycode, serial number, and CallPilot server IP addresses.
Legend/Help	Provides a description of icons and terminology displayed in the System Monitor window.

System Monitor is a nondestructive tool that does not alter the behavior of any CallPilot components.

To access the CallPilot System Monitor

On the Windows desktop, click Start → Programs → CallPilot → System Utilities → System Monitor.

Result: The CallPilot System Monitor window appears. By default, the Channel Monitor tab appears at the top. Click the other tabs to view the information on those tabs.

Channel Monitor tab

The following is an example of the Channel Monitor tab when connected to a Meridian 1.

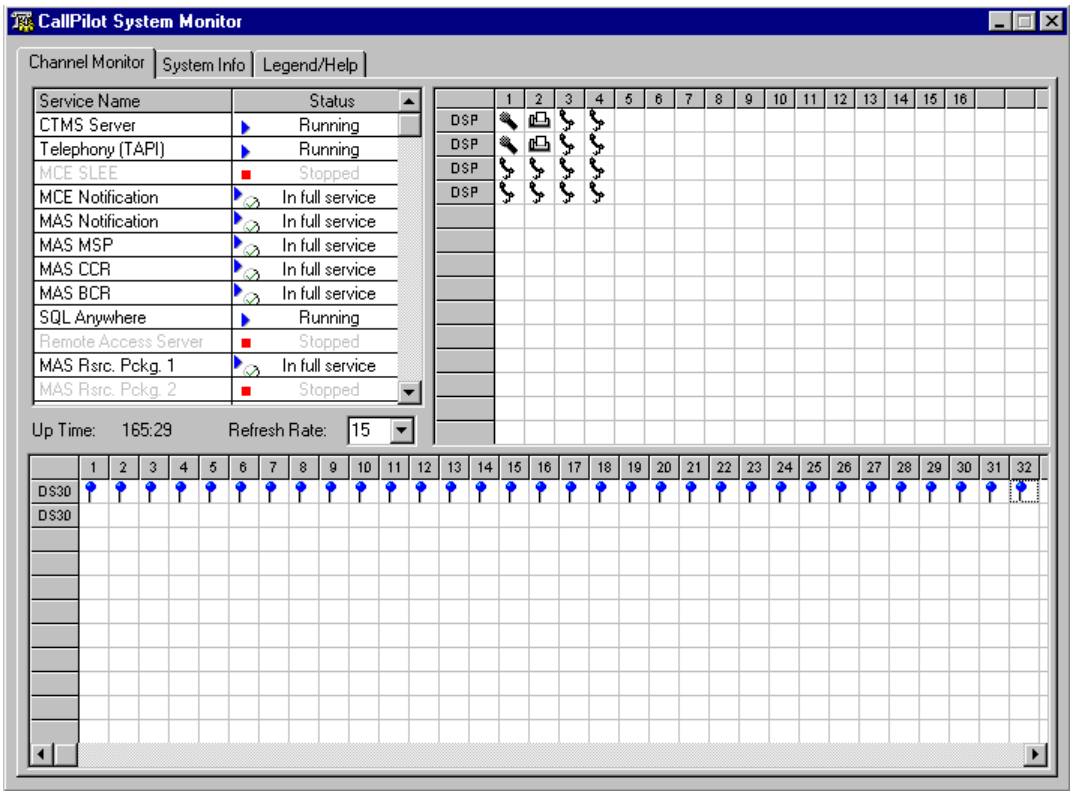

Figure 9: Channel Monitor with M1

CallPilot services

The Service Name pane shows the status of services from a CallPilot perspective. The Windows Services Control Panel can show that a service is running, but it may not be fully running or in service from a CallPilot perspective. Refer to the Channel Monitor tab in the Systems Monitor for the true status.

The services listed under Service Name can be either running or in full service when CallPilot is functioning optimally. If any CallPilot services are stopped, investigate the cause of this. Call Avaya technical support for assistance.

Note:

While you can investigate any stopped services, some services are not critical. CallPilot can continue to handle call processing even with some services stopped.

The critical services that are required for basic CallPilot call answering are listed in the following table. For your reference, the equivalent names as they appear in the Windows Control Panel are also listed.

CallPilot System Monitor	Windows Control Panel equivalent
CTMS Server	CTMS Server
Telephony (TAPI)	Telephony Services
MCE SLEE	CallPilot SLEE Service
MCE Notification	CallPilot MWI Service
MAS Notification	CallPilot Notification Service
MAS CCR	CallPilot Call Channel Router
MAS BCR	CallPilot Blue Call Router
SQL Anywhere	Adaptive Server Anywhere - %ComputerName%_SQLANY
MAS MltmediaCache	CallPilot Multimedia Cache
MAS MltmediaVol1	CallPilot Multimedia Volume 1
MAS MltmediaVol2 (TRP only)	CallPilot Multimedia Volume 102 (TRP only)
MAS MltmediaVol3 (TRP only)	CallPilot Multimedia Volume 103 (TRP only)
MAS Rsrc. Pckg. 1	CallPilot Resource Package1

DSPs

In the DSP pane, each DSP is represented in a separate row. Each box in the row is one DSP channel or multimedia channel. Click the Legend/Help tab to view descriptions of the multimedia channel icons.

Your 1006r server has either one or three MPB96 boards. Each MPB96 board has 12 DSP sections embedded on the board.

DS30X links

In the DS30 link pane, each DS30 row represents a separate DS30 link (also referred to as a DS30 link). Each box in the row represents one DS30 channel.

Each MPB96 board provides 3 DS30 links with a maximum of 32 channels associated with each link.

The DS30 links connect the CallPilot server to the MGate card in the Meridian 1 switch or Communication Server 1000 system. The DS30 link to the switch is supported by the connection of the server to the switch backplane.

System Info tab

Figure 10: System Info tab on page 67 shows an example of the System Info tab.

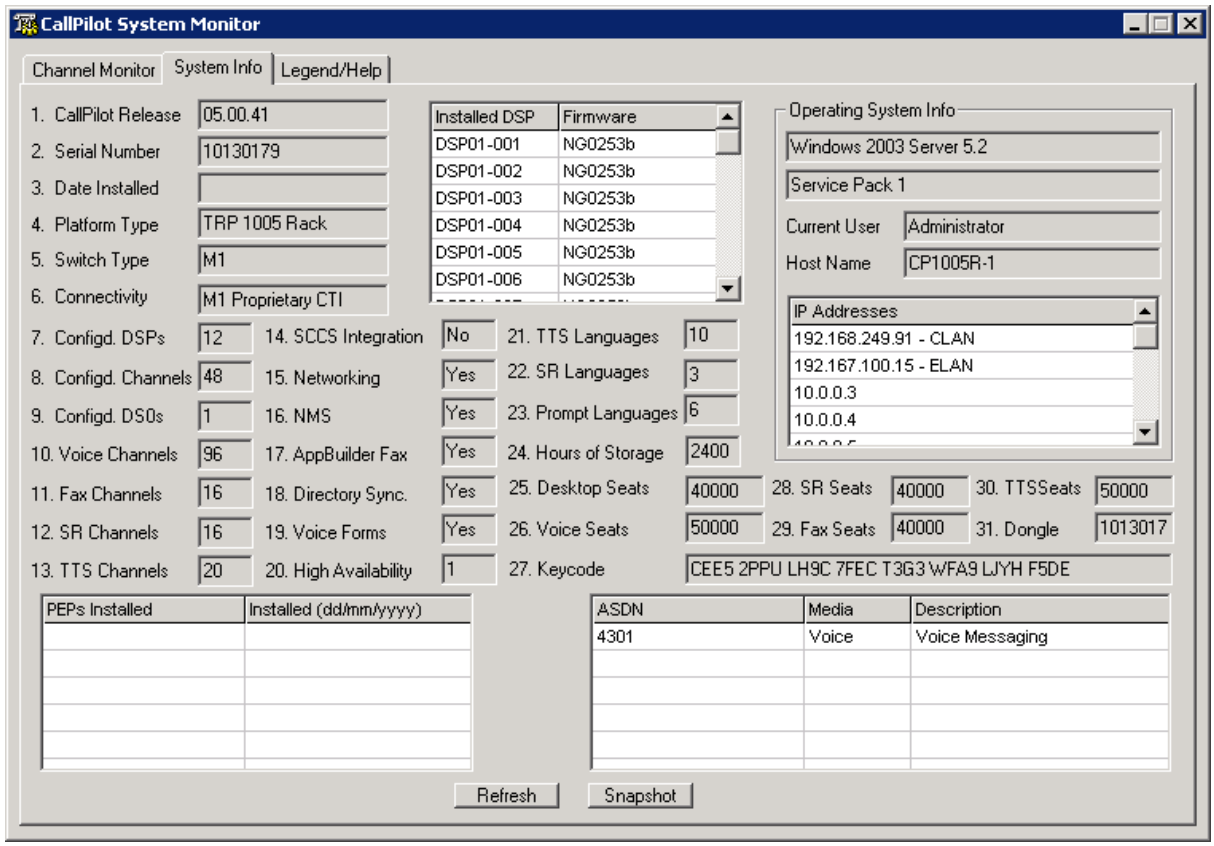

Figure 10: System Info tab

The numbered items provide information about the features purchased. Information about the underlying operating system appears in the top right corner, including the server IP addresses.

PEP information and configured Service DNs appear in the bottom part of the window.

Legend/Help tab

Figure 11: Legend/Help tab on page 68 shows an example of the Legend/Help tab. Consult this window for descriptions of the icons found on the Channel Monitor tab.

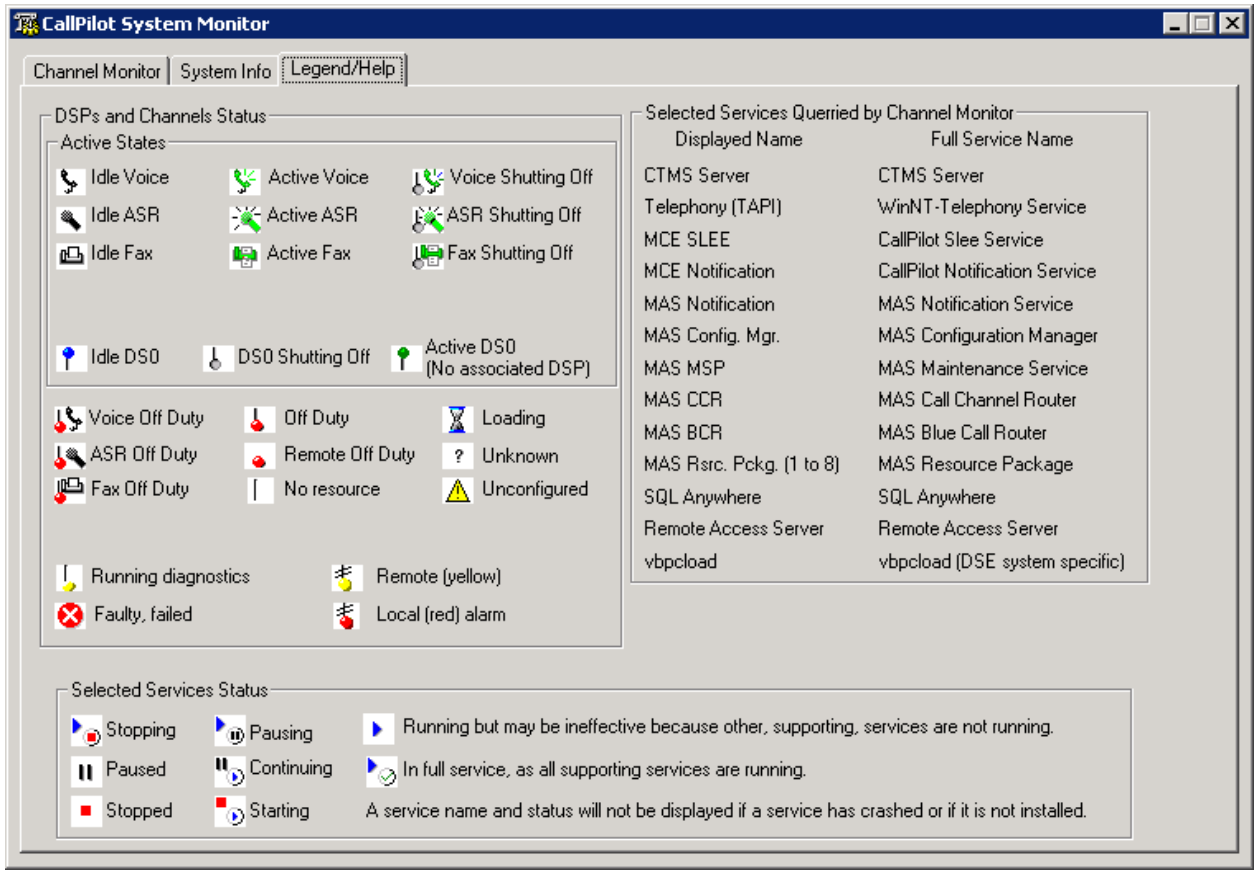

Figure 11: Legend/Help tab

Chapter 7: Replacing basic chassis components

In this chapter

Removing and replacing the server cover on page 69

Replacing the power supply on page 71

Replacing a hard drive on page 72

Replacing a fan module on page 74

Replacing the DVD combo drive on page 75

Replacing memory DIMMs on page 77

Replacing the software feature key on page 79

Removing and replacing the server cover

Remove the server cover if you must service the interior of the server.

Note:

If a component has a:

Blue tab	Power down the server before replacing it.
Green tab	It can be replaced while the server is powered on. Components that are hot swappable are the power supplies, fan modules, and hard drives.
Black tab	It is not set up as a field replaceable unit (FRU) and is non-replaceable.

To remove the server cover

1. **Voltage:**
   Risk of electric shock

High current inside the chassis can cause severe injury.

Caution:

Risk of equipment damage

Take precautions to protect internal components. Electrostatic discharge (ESD) can damage boards and make them unusable.

Power down the server, unplug all peripheral devices and Ethernet cables, and disconnect the AC power.

2. Turn off all peripheral devices connected to the server.
3. Attach the ESD strap to your wrist and attach the other end to a known grounded connection.
4. While holding the blue button at the top of the chassis in, slide the top cover back until it stops.

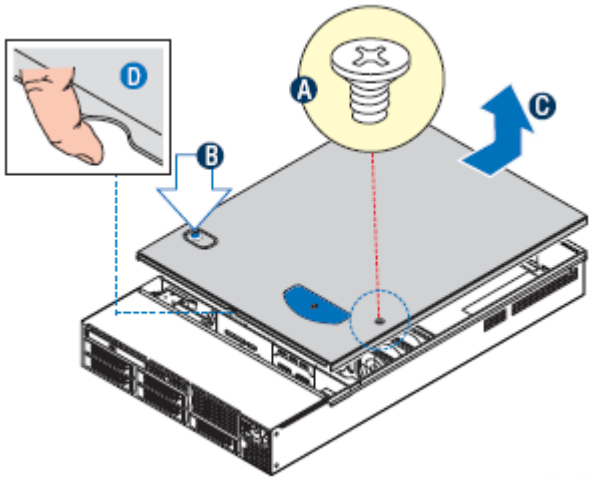

Figure 12: Server cover

5. Lift the cover straight up to remove it from the platform.

To replace the server cover

1. Place the cover over the chassis so that the side edges of the cover sit just inside the chassis sidewalls. The front of the cover is about an eighth of an inch from the sheet metal at the front of the chassis. Refer to Figure 12: Server cover on page 70.
2. Press down slightly on the chassis cover behind the DVD combo drive area and slide the cover forward until it clicks into place.

Replacing the power supply

The power supplies are hot swappable and can be replaced without powering down the server.

Important:

Do not remove both power supplies while the system is running. Shut down the multimedia channels by using the Courtesy Stop in Avaya CallPilot® Manager. Shut down the server using the Windows Shut Down option, and unplug the power supplies before removing both power supplies at the same time.

When to hot-swap the power supply

A green LED on the power supply indicates that the power supply is working properly. If the LED on the power supply module is off or amber, the module is failing or has failed. If the System Status LED on the front panel is amber, this also indicates a problem with one of the power supplies.

Note:

A power supply is not used by the system if it is not installed when the firmware is updated.

To hot-swap a power supply

1. **Voltage:**

   Risk of electric shock

   High current inside the chassis can cause severe injury.

   Push the green latch in the direction shown below (A) to disengage the power supply.

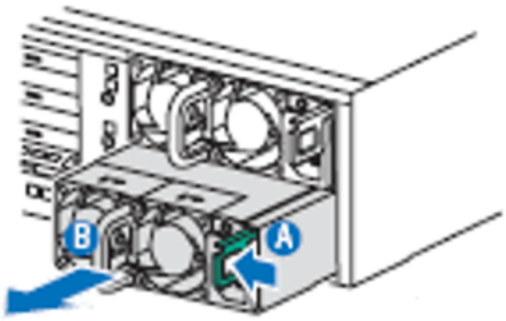

Figure 13: Power supplies

2. Grasp the black handle (B) and pull the power supply from the chassis.
3. Insert the replacement power supply. When inserting the new power supply, make sure the green latch (A) is pressed inward while sliding the module into the power supply cage.
4. Plug the new power supply into the AC mains.

   Result: The power supply LED illuminates green.

Replacing a hard drive

Two hot-swappable SAS hard drives are installed in the chassis. The drives are installed in Bay 1 and Bay 2, all the other bays must have blanks installed for proper air flow. Each drive carrier has its own dual purpose latching mechanism, which is used to both extract and insert the drives from the system and lock the carrier in place.

Important:

The replacement hard drive must be the same size or larger than the drive being replaced.

To replace a SAS hard drive

1. Attach an ESD strap to your wrist and attach the other end to a known grounded connection.
2. Locate the faulty hard drive. Refer to the following diagram of the front panel.

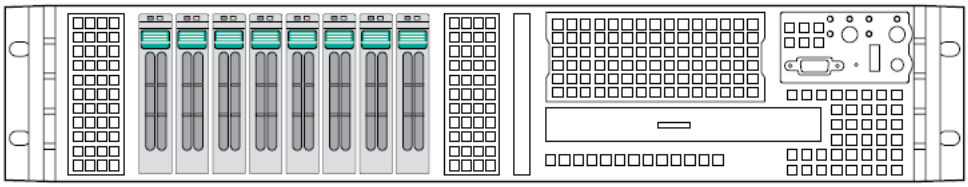

Figure 14: Front panel

- Bay 1 is on the far left.
- Bay 2 is to the right of Bay 1.

3. Pull the green latch on the front of the hard drive carrier.

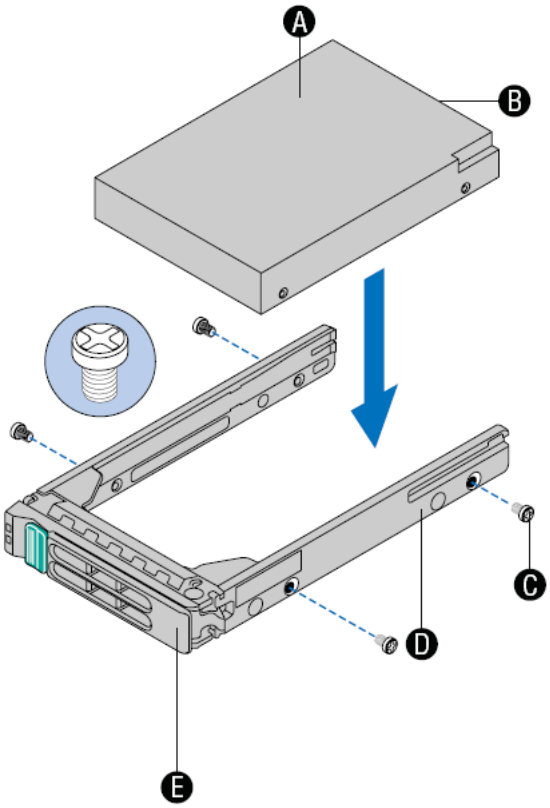

Figure 15: SAS hard drive with carrier

4. Pull out on the lever to slide the carrier from the chassis.
5. Remove the four screws (C) from the drive carrier (E) to release the hard drive.
6. Remove the new hard drive from its wrapper and place it on an antistatic surface.
7. With the drive circuit-side down, position the connector end (B) of the drive so that it is facing the rear of the drive carrier.
8. Align the holes in the drive to the holes in the drive carrier and attach it to the carrier using the four screws previously removed.

9. With the green lever in the fully open position, slide the drive assembly into the chassis.
10. When the drive carrier lever begins to close by itself, push on it to lock the drive assembly into place.
11. Take the ESD strap off.
12. Resynchronize the new hard disk. Refer to To synchronize the RAID after a successful PEP installation on page 87.

Replacing a fan module

The six-fan cooling modules are hot-swappable.

When to replace a cooling fan module

When one or more of the six cooling fans is not turning, the remaining fans rotate faster to maintain the same volume of air flow through the chassis. The hum of a cooling fan rotating faster is both louder and higher in pitch than normal and indicates that the assembly must be replaced.

To replace a fan module

1. Attach an ESD strap to your wrist and attach the other end to a known grounded connection.
2. Remove the chassis cover. Refer to Removing and replacing the server cover on page 69 for instructions.

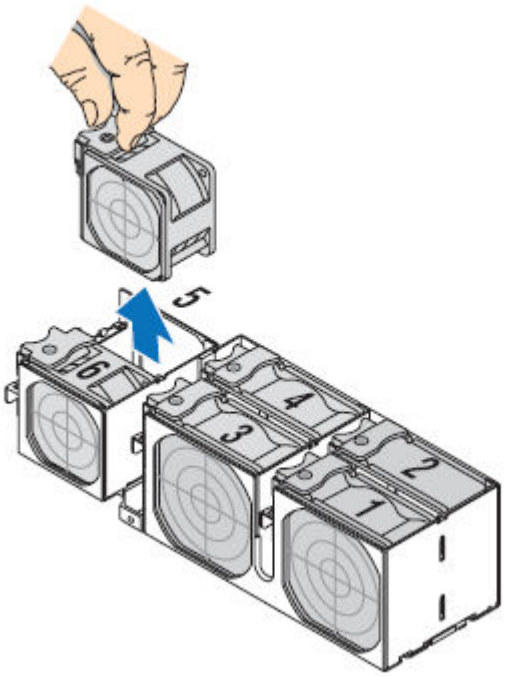

Figure 16: Cooling fan module

3. Grasp the fan module as shown above.
4. Lift the fan module straight up and remove it from the chassis.
5. Lower the new fan module into place.
6. Replace the chassis cover.
7. Take the ESD strap off.

Replacing the DVD combo drive

The DVD combo drive is not hot-swappable. You must power down the system to replace the DVD combo drive.

Requirements

You need a Phillips (cross head) screwdriver, #1 bit.

To replace the DVD combo drive

1. Power down the server and disconnect the AC power.
2. Attach the ESD strap to your wrist and attach the other end to a known grounded connection.
3. Remove the chassis cover. Refer to Removing and replacing the server cover on page 69 for instructions.
4. Slide the DVD combo drive assembly from the chassis (A) as shown in the following diagram, by simultaneously pushing the blue tab down while pulling the DVD unit out.

   Note:

   There are no cables to disconnect.

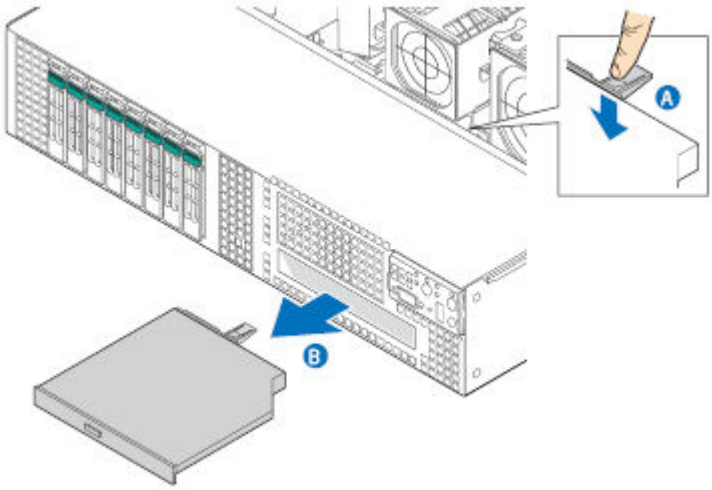

Figure 17: DVD combo drive assembly

5. Remove the screw on the left side of the drive assembly and save it along with the blue plastic tab for installing on the new DVD combo.
6. Install the blue tab on the new DVD combo drive as shown below.

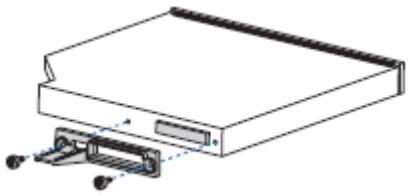

Figure 18: Plastic tab

7. Slide the DVD combo drive assembly into the chassis until the blue tab snaps into place.
8. Replace the chassis cover.
9. Take the ESD strap off.

10. Reconnect the power cables and peripheral devices.
11. Restart the server.

Replacing memory DIMMs

Four Dual Inline Memory Modules (DIMMs) are installed on your server. You must replace all four memory DIMMs with those in the Avaya replacement pack. Avaya does not support more than four DIMM modules in the 1006r server.

Caution:

Risk of equipment damage

Take precautions to protect internal components. Electrostatic discharge (ESD) can damage cards and make them unusable.

To replace the DIMM cards

1. Power down the server, unplug all peripheral devices and Ethernet cables, and disconnect the AC power.
2. Attach the ESD strap to your wrist and attach the other end to a known grounded connection.
3. Remove the chassis cover. Refer to Removing and replacing the server cover on page 69 for instructions.
4. Remove the PCI riser assembly.
5. Remove the processor air duct by lifting it from the server platform and store it in a safe location.
6. Locate A1 and B1 in the memory bank beside processor 1, and D1 and E1 in the memory bank beside processor 2. Refer to the following diagram.

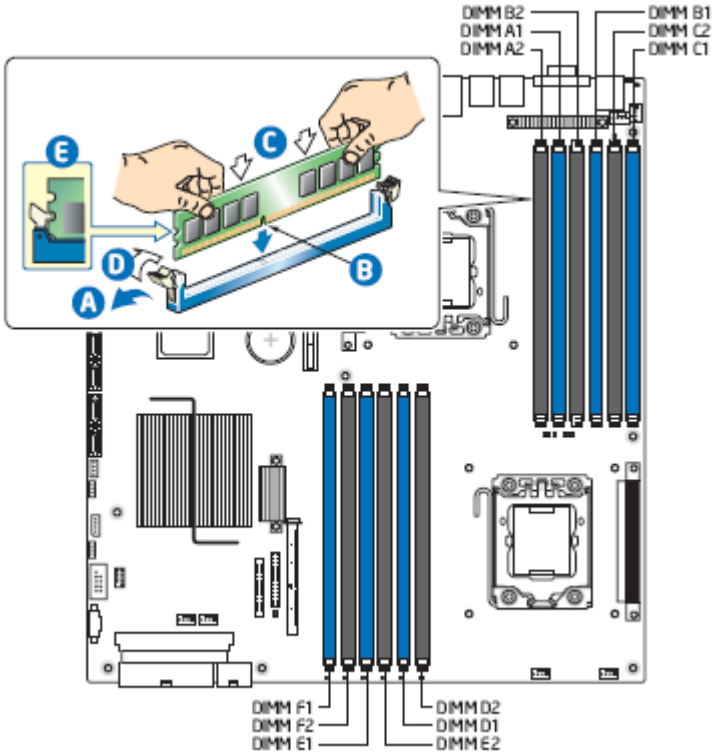

Figure 19: Memory DIMM locations

7. Push the clips at each end of the DIMM sockets outward to the open position.
8. Remove all the DIMMs.

Note:

All DIMMs must be identical, therefore if one DIMM is faulty, all DIMMs need to be replaced.

9. Holding each replacement DIMM by the edges, remove it from the antistatic envelope.
10. Position the new DIMM above the socket and align the small notch in the bottom edge of the DIMM with the keys in the socket.
11. Insert the bottom edge of the DIMM into the socket.
12. Push down on the top edge of the DIMM until the retaining clips snap into place. The retaining clips must be fully closed for the DIMM to make proper contact with the server board.
13. Install the other DIMMs.
14. Replace the processor air duct.
15. Replace the chassis cover.
16. Plug in all peripheral devices and AC power.
17. Restart the server.

Replacing the software feature key

If you upgrade your system or convert it to high capacity, you must replace the software feature key with a new key. The software feature key is also known as a dongle.

To replace the software feature key

1. Remove the new software feature key from the plastic bag.
2. Eject the old software feature key by inserting a straightened paper clip into the side access hole.
3. Push the paper clip in the direction of the software feature key.
4. Insert the new software feature key into the software feature slot on the dongle with the data contact facing down and away from the embossed i.

Figure 20: Dongle with open slot

In the following figure, label 1 is the data contact and label 2 is the ground.

Figure 21: Inserting the feature key

Chapter 8: RAID operations

In this chapter

Outlining RAID functions on page 81

Verifying the RAID firmware on page 82

Configuring RAID controller using Ctrl+G on page 83

Verifying consistency on the drives on page 85

RAID splitting on page 86

Outlining RAID functions

Redundant Array of Independent Disks (RAID) is a technology that can combine two or more drives for fault tolerance and continuous service. The Avaya CallPilot® 1006r RAID is a embedded SAS PCI controller that provides high-performance disk mirroring with hardware RAID Level 1.

With Level 1 mirroring, two equal-capacity disk drives mirror one another. One disk drive serves as the backup copy of the other disk drive. If one disk drive fails, the other continues to run.

RAID configuring and splitting

Working with RAID involves the following:

- verifying the RAID firmware version
- upgrading or downgrading the RAID firmware
- configuring RAID using the Ctrl+G menu at server bootup
- ensuring that your system is working and the RAID hardware is properly configured

- performing RAID splitting
- synchronizing RAID after installing Avaya CallPilot software upgrades (PEPs)
  - Resynchronizing RAID if the installation is successful
  - Resynchronizing RAID if the installation is not successful

Warning:

Avaya strongly recommends that you do not perform low level formatting. Performing low level formatting results in the drives becoming unusable.

Verifying the RAID firmware

You require the following minimum RAID firmware version:

- v1.40.62-0665

To verify the RAID firmware version

To determine what the current RAID firmware version is on the RAID controller, use either of the following procedures: Press Ctrl+G

1. Turn on the server and press Ctrl+G when prompted during system bootup.
2. The RAID firmware is displayed in the top right corner.
3. Review the information on the screen.

Launch RAID Web console

1. Boot to Windows.
2. Launch the RAID client by clicking Start > Programs> RAID Web Console > StartupUI.
3. Login to the RAID Web Console by entering Windows administrator credentials.

   Note:

   Ensure Full Access is selected in the Access Mode drop-down list.
4. From the RAID Web console, click on the RAID Controller in the Physical tab on the left.
5. Review the information on the Properties screen on the right.

   If the firmware is not correct, perform a firmware update. For instructions, see To upgrade or downgrade the RAID firmware on page 83.

Important:

Perform the following procedure only if the firmware version is not the version identified in this section.

To upgrade or downgrade the RAID firmware

The firmware of the RAID card is upgraded through a flash process. The flash process is initiated by running the RAID card firmware update utility.

1. Download the latest 1006r EFI firmware package from Avaya support site.
2. Unzip and place the files in a root directory on a USB drive (the USB does not need to be bootable).
3. Connect a USB drive to the USB port on the front of the server.
4. Power down the CallPilot server.
5. Restart the CallPilot server and press F6 to go to the boot menu, and select Boot to EFI shell.

   Result: The server boots and will automatically detect the firmware upgrade package on the USB drive and will go to the root directory.
6. Read the warning message and press Enter to go to the prompt.
7. Type RAID.nsh at the prompt and wait for the RAID firmware to be upgraded.
8. Manually reboot the CallPilot 1006r by typing Reset at the EFI prompt.

   Result: The system reboots.

Configuring RAID controller using Ctrl+G

The configuration of the RAID card is stored on both the card and the hard drive. Typically you are not required to re-configure RAID unless you are making a change to the RAID system (for example, if you replace the hard drives with higher capacity hard drives).

Caution:

Risk of data loss

This procedure requires that the logical drive be initialized. When you initialize the logical drive, all data on the hard drives is erased.

Do not perform this procedure unless you are replacing the hard drives or you are rebuilding the CallPilot system (that is, reinstalling the Windows operating system and CallPilot software).

To configure RAID using the Ctrl+G utility

To configure RAID, do the following:

1. Turn on the server and press Ctrl+G when prompted during system bootup.
2. Click Start to select the sole adapter shown.
3. If this is a brand new configuration, proceed to step 7, otherwise select Configuration Wizard from the left menu, then Clear Configuration.

4. Click Next to continue.

   A warning message appears.
5. Click Yes to continue.
6. Click Home to return to the main menu.
7. Select Controller Properties.

   Firmware and adapter information can be read on this screen.
8. Click Next and ensure the following values are set accordingly:

   Battery Backup: None Factory Defaults: No Cluster Mode: Disabled Rebuild Rate: 30% BGI Rate: 30% CC Rate: 30% Reconstruction Rate: 30% Patrol Rate: 30% Controller BIOS: Enabled NCQ: Enabled SSD Guard: Enabled Coercion Mode: 1GB Way PDF Interval: 300 Alarm Control: Enabled Cache Flush Interval: 4 Spinup Drive Count: 2 Spinup Delay: 6 Stop on error: Enabled Drive Power Save: Disabled
9. Click Next to continue and ensure the following settings are correct:

   Stop CC Ob error: No Maintain PD Fail History: Enabled Schedule CC: Supported
10. Click Supported to enter the menu. Ensure the CC Frequency is set to Disabled.
11. Click Submit to save CC settings.
12. Click Back to go to the Controller Settings.
13. Click Submit to save the Controller Properties Settings.
14. Click Home to go to the Adapter main menu.
15. Select Configuration Wizard > New Configuration.
16. Click Next to proceed.

    A warning message appears.
17. Click Yes to continue.
18. Select Automatic Configuration (Redundancy where possible).
19. Click Next.

    On the Drives and Virtual Drives menus, both the physical drives and virtual drive 0 should show as Online, respectively.
20. Click Accept to continue.
21. Click Yes to save the configuration.
22. Click Yes to initialize.
23. If you want to verify the virtual drive properties, from the main menu, go to Virtual Drives and select the Properties radio button.

    RAID Level: RAID1 Strip Size: 64k Access Policy: RW Read Policy: Normal Write Policy: WrThru I/O Policy: Direct Disk Cache Policy: No Charge/Disabled Disable BGI: No

24. Click Home or Exit to exit the Utility.
25. Press CTRL+ALT+DEL to reboot the system and complete the configuration.

Verifying consistency on the drives

This optional consistency check on the logical drive of the RAID system ensures that the data on the drives is identical. If any errors are found, they are corrected automatically. Avaya strongly recommends that you do a consistency check before you split the RAID system pack. If possible, perform the consistency check the day before the scheduled maintenance. A good data backup on an offline drive is important if you need to revert to the CallPilot system from an unsuccessful upgrade or update.

Note:

The consistency check can take up to 2 hours to complete and has no significant impact on system performance.

To perform a consistency check

1. In Windows, click Start > Programs > RAID Web Console 2 > StartupUI.

   Result: The RAID Web Console login dialog box appears.
2. Enter Windows User ID and Password and ensure that Access Mode > Full Access is selected, and click OK.

   Result: The RAID Web Console dialog box appears displaying the Logical View of the Physical Devices and the Logical Devices. The status bar at the bottom of the window indicates that RAID channels are being scanned. When scanning is done, the screen refreshes and the Physical and Logical Devices screen appears.
3. In the Logical Devices section, right-click the logical drive, and then choose Check Consistency from the shortcut menu.

   Result: The Check Consistency status dialog box appears. You are informed when the check is finished. If any errors are found, a window with an error message appears.
4. Select Manage > Exit to close the RAID Web console.

   Result: An end of session message appears.
5. Click OK.

RAID splitting

Ensure that your system is in full working order and the RAID hardware configuration is set up properly as described on Configuring RAID controller using Ctrl+G on page 83.

Split the RAID before you install software upgrades (PEPs). If you are performing a platform upgrade or migration, refer to the Upgrade and Platform Migration Guide (NN44200-400) for complete instructions.

Important:

As an extra precaution, Avaya recommends that you perform a full system backup prior to performing a RAID-split. For more information about system backups, see the CallPilot Manager online Help.

To split the RAID

1. On the active CP server, launch the RAID Web Console. Select Start > Programs > RAID Web Console 2 > StartupUI.
2. Enter the same credentials used for Windows login and ensure that Access Mode > Full Access is selected.
3. Ensure all drives are in an Online state.
4. Right-click the first drive and select Make Drive Offline

   A message appears advising that marking the online drive Offline results in charges.
5. Ignore the warning message. Click Confirm and Yes.

   At this point, the RAID is split, and the drive marked Offline is the backup drive and is no longer written to. You can install a PEP on the system and use the backup drive to back out of the installation.

   Important:

   Do not make the failed drive online at this point, or data corruption can occur. If you failed the wrong drive by mistake, you must select rebuild to bring it back into service.

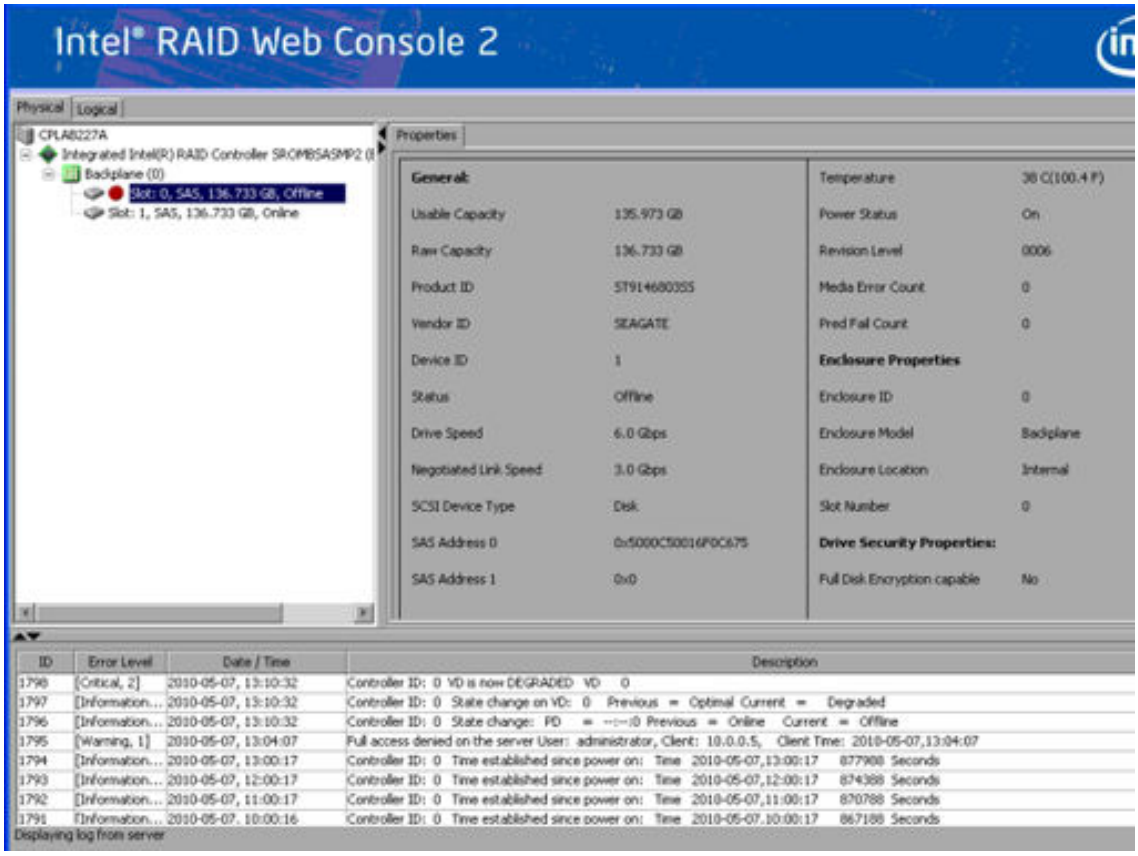

Figure 22: RAID Web Console drive status

RAID synchronization after installing a PEP

Resynchronize the RAID after you perform a software upgrade with a PEP.

To synchronize the RAID after a successful PEP installation

To restore RAID to full service after a successful PEP installation:

1. Without shutting down the server, from Windows, click Start > Programs > RAID Web Console > StartupUI.
2. Enter the same credentials used for Windows login and ensure that Access Mode > Full Access is selected.
3. Click OK.

Result: The RAID Web Console window appears.

4. In the Physical Devices section, right-click the hard disk drive that is marked Offline.

   Important:

   Do not make the failed drive online at this point, or data corruption can occur. If you failed the wrong drive by mistake, you must select rebuild to bring it back into service.

5. From the right mouse shortcut menu, select Rebuild.

   Result: When the rebuild is complete, the drive status changes to ONLINE and the color of the icon changes to green.

   The rebuild process takes up to one hour. If the server reboots during the rebuild process, the rebuild continues when the server restarts. However, a power down or reboot is not recommended during the rebuild process.

To synchronize the RAID after an unsuccessful PEP installation

If the PEP installation fails, you must return the system to the original configuration.

Important:

Do not use the RAID Web Console for the following procedure, or data corruption can occur.

1. Restart the Call Pilot server and enter the Ctrl+G utility when prompted during system bootup.
2. Select **Physical View/Physical Drive**, then select the physical drive with a status of **Online**.
3. Select the **Make Drive Offline** radio button and click **Go** to make it offline.
4. Ignore the warning message and click **Yes**.
5. Click **Home**; the display now shows the drive is offline.
6. Select the offline drive (previously designated as the backup drive and marked failed) and make it Online. Ignore the warning message. Now this drive is marked Online and the other drive is marked Offline.
7. Exit the **CTRL+G** utility and press **Ctrl+Alt+Delete** to restart the server. The system boots up to the original configuration before the PEP installation.
8. After the system is fully operational, open the RAID Web Console and rebuild the drive marked Offline using the process described in To synchronize the RAID after a successful PEP installation on page 87.

Chapter 9: Replacing or adding voice processing boards

In this chapter

- M1/Avaya Communication Server 1000 switch connectivity on page 89
- Locating the voice processing boards on page 90
- DSP numbering and location on page 91
- Replacing an MPB96 board on page 92
- Upgrading to high capacity on page 96

M1/Avaya Communication Server 1000 switch connectivity

There are two valid configurations for MPB96 boards with M1/Avaya CS 1000 switch connectivity. The following table shows valid configurations.

Table 14: MPB96 with M1/CS1000 switch

MPB96 boards	Slot number	Max. channels	MPU
1	1	96	96
3 (high capacity)	1, 2, 3	192	288

Determine which configuration applies to your system.

Important:

You must use one of the valid configurations for the system to function properly.

Taking safety precautions

Before you make any changes to the server hardware, follow these safety precautions:

- Respect appropriate electrostatic discharge (ESD) rules.
- Power down the system if you are replacing hardware that is not hot swappable.
- Do not drop and leave screws inside the server.
- Do not drop hard objects (such as screwdrivers) inside the server as this can damage the server.

Locating the voice processing boards

Figure 23: 1006r server rear panel on page 91 shows the rear panel of the 1006r server with the three full-height PCI card slots (C). The MPB96 voice processing boards occupy one or three full-height slots. In the following diagram, the card slots are numbered from 1 to 3 starting at the top.

Important:

There is one version of MPB96 boards: NTRH40CAE5.

- The NTRH40CAE5 has three RJ-45 faceplate connectors, and connects to the Communication Server 1000 or Meridian 1 using standard Ethernet-type CAT5e (or greater) cables. These cables can be up to 600 metres in length. The RJ-45 connectors are numbered from DS30-1 to DS30-3 starting from the right side of the server as you face the back panel

(next to the power supplies). In the illustration below, N represents DS30-1, M represents DS30-2, and L represents DS30-3.

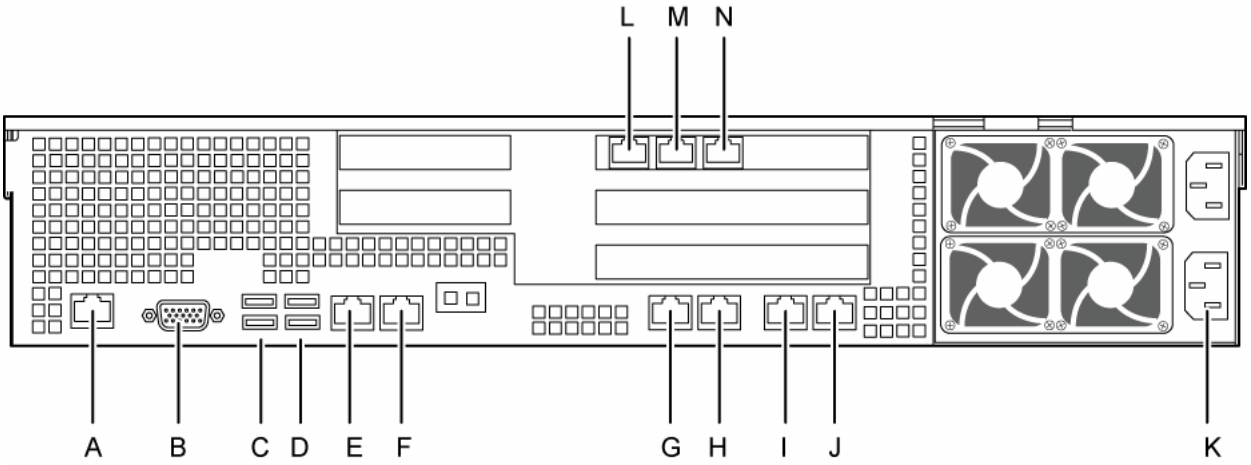

Figure 23: 1006r server rear panel

Refer to the 1006r Server Hardware Installation (NN44200-320) guide to identify the other features on the 1006r rear panel.

DSP numbering and location

DSPs are the built-in voice processing components on MPB boards. DSPs are numbered to distinguish them in Avaya CallPilot® maintenance programs, such as the Maintenance screen in CallPilot Manager. Each DSP supports up to eight multimedia channels.

DSP numbering MPB96 boards

The MPB96 board has 12 embedded DSPs. MPC-8 cards are not required. If an embedded DSP is faulty, you must replace the entire MPB96 board.

The following illustration shows an NTRH40CAE5 MPB96 board, and faceplate. Note that there are link status LEDs on each RJ-45 connector.

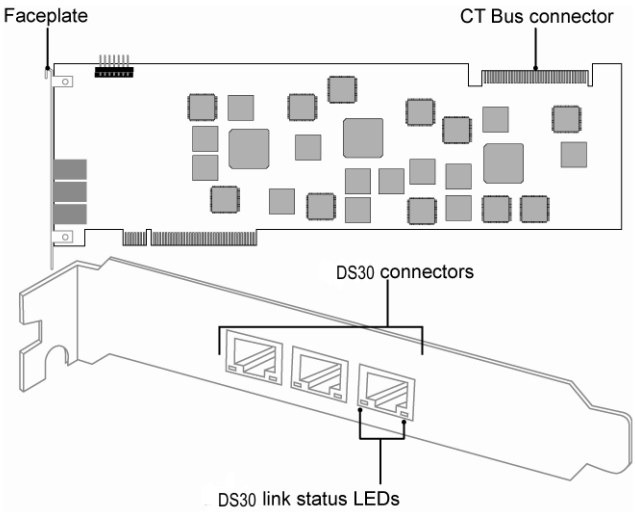

Figure 24: MPB96 board (NTRH40CAE5)

Replacing an MPB96 board

This section describes how to replace an MPB96 board.

You must replace an MPB96 board:

- if the board becomes faulty
- when the FPGA firmware needs to be updated, and the board must be sent back to the factory

Caution:

Risk of electrical damage

- Wear an antistatic ESD wrist strap when handling cards or boards, or when working inside the server.
- Do not touch the components or gold-edge connectors of cards or boards.
- Place the board on an antistatic surface until you are ready to install it.

MPB96 boards are not hot-swappable and you must power down the system before replacing the cards.

Caution:

Risk of physical equipment damage

Remove the 1006r from the rack, and place it on a solid surface when replacing or adding cards. The PCI riser assembly requires considerable force when inserting it into the connector, and physical damage can result if the assembly is not properly aligned.

Placing the server on a solid surface such as a workbench gives you a better view of the card alignment and lets you exert the necessary force when inserting the assembly into the connector.

Requirements

- Phillips (cross head) screwdriver, #2 bit
- MPB96 replacement board
- electrostatic discharge (ESD) grounding strap

To replace an MPB96 board

1. Courtesy stop all Avaya CallPilot channels. Refer to Starting and stopping components on page 50.
2. Power down the server, unplug all peripheral devices and Ethernet cables, and disconnect the AC power.
3. Attach the ESD strap to your wrist and attach the other end to a known grounded connection.
4. Remove the chassis cover. Refer to Removing and replacing the server cover on page 69 for instructions.
5. Disconnect the CAT5 cable(s) from the MPB96 board(s).

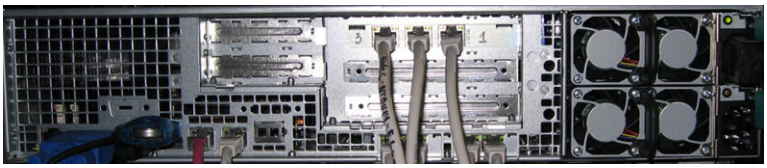

Figure 25: CAT5 cables

Important:

Before disconnecting your CAT5 cables, make sure each cable is labeled according to its location. Incorrectly connected MPB96 boards do not answer calls.

6. Lift the PCI riser card assembly by the blue tabs and pull up on the riser to remove the assembly from the chassis.

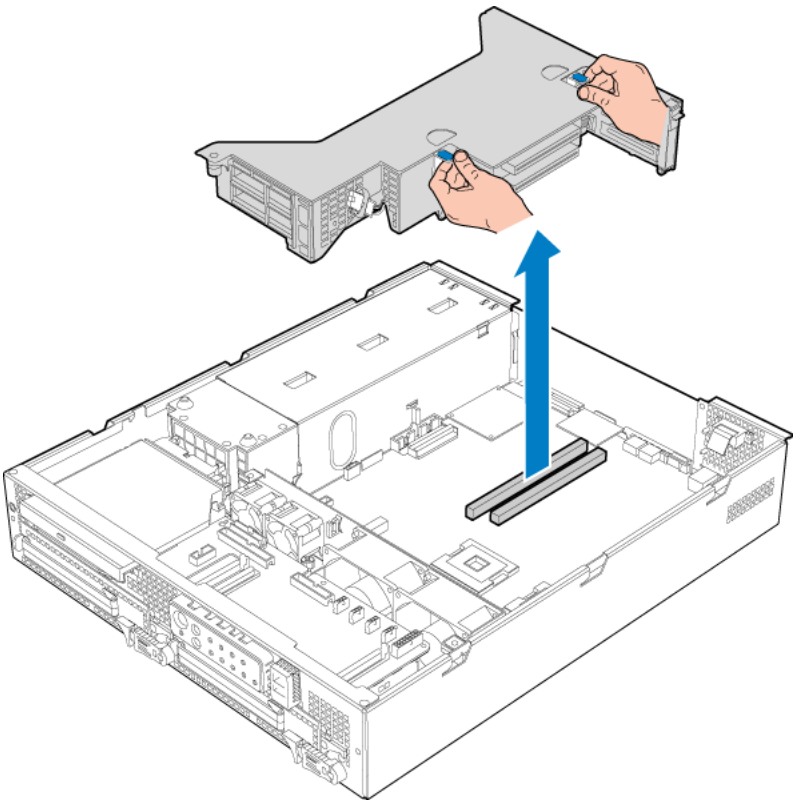

Figure 26: PCI riser card assembly

7. Turn the riser card upside down and place it on a table.
8. Disconnect the CT bus cable from the MPB96 boards (high capacity configuration only).

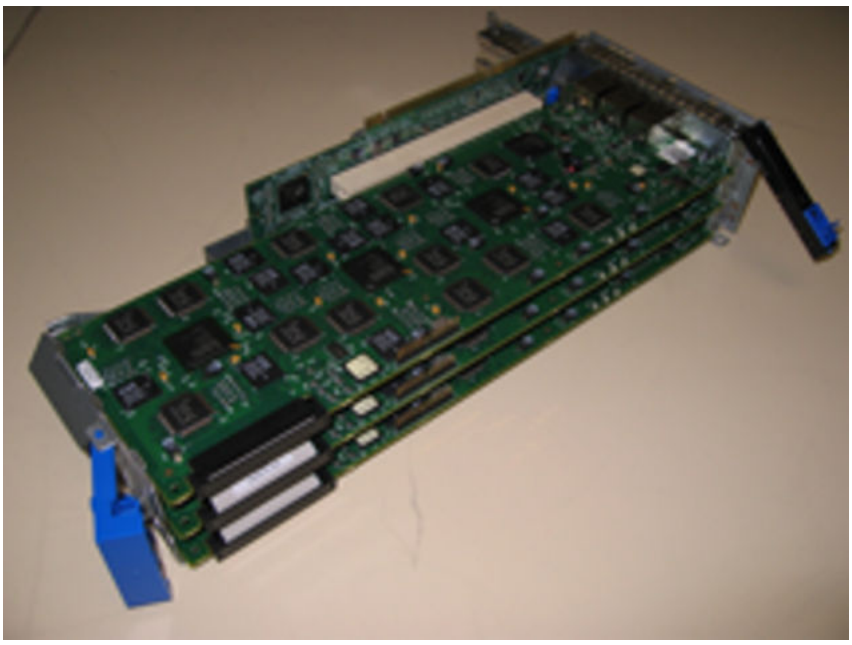

Figure 27: CT bus cable attached to MPB96 boards

9. Release the blue tabs that hold the card in place as shown in the picture above.
10. Replace the card(s).

Important:

Cards in slot 1 may be difficult to plug in due to its proximity to the riser card wall. Exercise caution during the step and ensure the card is aligned properly as to not damage the EMC metal gasket.

11. Reconnect the 3-drop CT bus cable (high capacity configuration only).
12. Turn the PCI riser card right-side up.
13. Hold the PCI riser assembly by the two slots marked in blue and push the assembly into the server board. Refer to Figure 26: PCI riser card assembly on page 94.

Important:

If the PCI riser assembly is not fully seated, the server can malfunction.

14. Reconnect all MPB96 cables.
15. Replace the chassis cover.
16. Take the ESD strap off.
17. Power up the server and log on to Windows.
18. Run the Configuration Wizard to configure the new hardware.

    For instructions, see Meridian 1 and CallPilot Server Configuration (NN44200-302) or CS1000 and CallPilot Server Configuration (NN44200-312).

Result: The MPB96 board replacement is complete.

19. Test the multimedia channels to ensure the new MPB96 board is functioning properly.

    For instructions, see "Testing the CallPilot installation" in the Installation and Configuration Task List (NN44200-306).

Upgrading to high capacity

This section describes how to upgrade your server hardware to the high capacity configuration. You need three MPB96 boards to support the high capacity feature.

For more information about MPB96 board versions and cables see Locating the voice processing boards on page 90.

Important:

The NTRH40CAE5 MPB96 board only connects to NTRB18DAE5 or later MGate cards.

Caution:

Risk of electrical damage

- Wear an antistatic ESD wrist strap when handling cards or boards, or when working inside the server.
- Do not touch the components or gold-edge connectors of cards or boards.
- Place the board on an antistatic surface until you are ready to install it.

MPB96 boards are not hot-swappable and you must power down the system before adding boards.

Requirements

- Phillips (cross head) screwdriver, #2 bit
- High capacity upgrade kit (two or three MPB96 boards, and a CT bus cable)

Important:

CAT5 cables are not supplied with the upgrade kit. The NTRH40CAE5 uses standard CAT5e (or greater) Ethernet-type cables. For a detailed description of these cables see CS 1000 and CallPilot Server Configuration guide (NN44200-312).

To add MPB96 boards

1. Courtesy stop all CallPilot channels. Refer to Starting and stopping components on page 50.
2. Power down the server, unplug all peripheral devices and Ethernet cables, and disconnect the AC power.
3. Attach the ESD strap to your wrist and attach the other end to a known grounded connection.
4. Remove the chassis cover. Refer to Removing and replacing the server cover on page 69 for instructions.
5. Disconnect the CAT5 cable from the MPB96 board in the full-size side of the PCI riser. Mark the cable as number 1.

   If the MPB96 board is an NTRH40CAE5, disconnect the three CAT5 cables from the RJ-45 faceplate connectors. Mark the cables as 1, 2, and 3. The RJ-45 connectors are numbered from the right of the server as you face the back panel next to the power supplies.
6. Lift the blue tabs and pull up on the riser to remove the riser card assembly from the chassis.

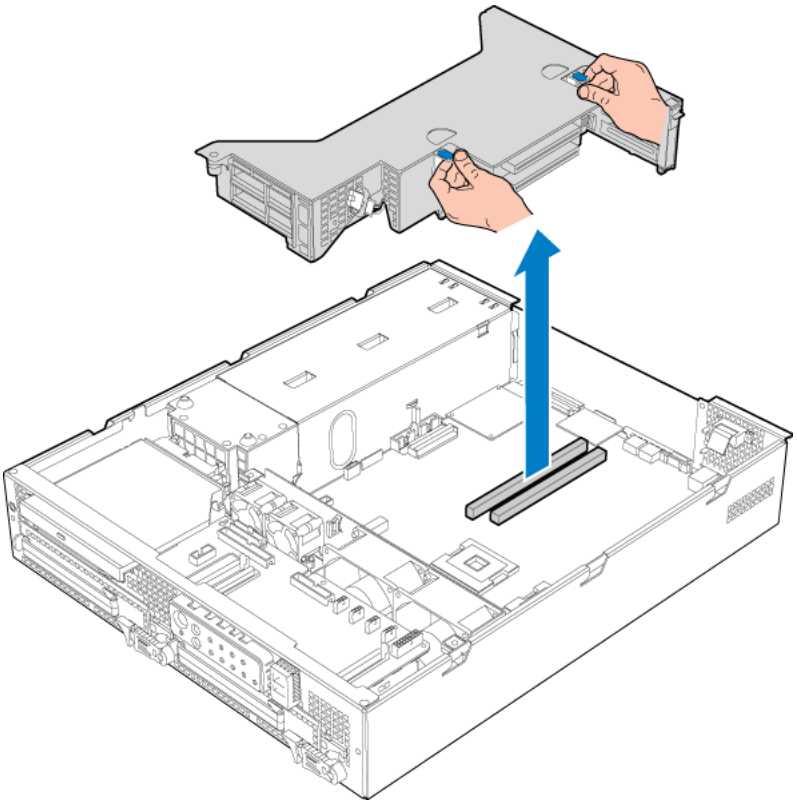

Figure 28: PCI riser card assembly

7. Turn the riser card upside down and place it on a table.

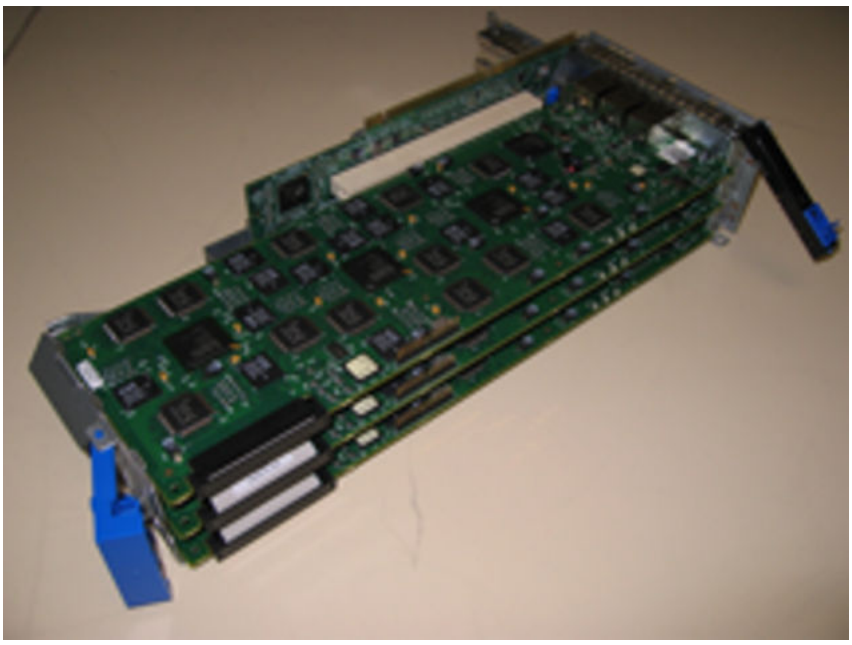

Figure 29: PCI riser card upside down on table

8. Release the blue tabs that hold the card in place as shown in the picture above.
9. Add card(s) in PCI slot 2 and 3.
10. Connect the 3-drop CT bus cable to the MPB96 boards as shown in the picture above.
11. Turn the PCI riser card right-side up.
12. Hold the PCI riser assembly by the two slots marked in blue and push the assembly into the server board. Refer to Figure 26: PCI riser card assembly on page 94.
13. Connect the CAT5 cables to the MPB96 boards

    The RJ-45 connectors are numbered from 1 to 3 starting at the right side of the server next to the power supplies as you face the back panel.
14. Replace the chassis cover.
15. Take the ESD strap off.
16. Power up the server and log on to Windows.

    Result: The Windows New Hardware Found Wizard screen appears.
17. Click Next.
18. Select the presented Avaya MPB driver (there is only one).
19. The Windows New Hardware Found Wizard screen appears again.
20. Click Next.
21. Select the presented Avaya MPB driver (there is only one).

    If you are upgrading a pair of High Availabilityservers, do not complete the next two steps. Return to the Procedure "Performing a High Capacity upgrade".

22. Run the Configuration Wizard to configure the new hardware.

    For instructions, see Meridian 1 and CallPilot Server Configuration (NN44200-302) or CS1000 and CallPilot Server Configuration (NN44200-312).

    Result: The high capacity expansion is complete.

23. Test the multimedia channels to ensure the new MPB96 boards are functioning properly.

    For instructions, see "Testing the CallPilot installation" in the Installation and Configuration Task List (NN44200-306).

Chapter 10: Maintaining the BIOS and system board firmware

In this chapter

Configuring the 1006r BIOS and firmware on page 101

BIOS settings on page 104

Using system event logs on page 105

Maintaining the onboard video and network cards on page 107

Configuring the 1006r BIOS and firmware

The Basic Input/Output System (BIOS) of your 1006r server is flash ROM-based code. Upgrade or reconfigure the BIOS using the utilities on the Avaya CallPilot® Image DVD. The utility programs write updated code to the Flash ROM chips. The following table shows the latest BIOS and firmware versions.

Table 15: BIOS and firmware versions

Description	Version
BIOS	48
FRU/SDR	22
BMC	49
ME	1.12
HSC	2.11
RAID	v1.40.62-0665
SLP string	(Windows Activation)

Important:

You must complete all steps in the correct order for your system to function properly.

When to upgrade the BIOS

Caution:

Risk of data loss

Perform this procedure only if specifically instructed to do so by your Avaya representative.

The Avaya CallPilot® server is shipped to you with the required minimum BIOS and system board firmware versions as outlined in the table above. Upgrade the BIOS and system board firmware only if your Avaya representative deems this necessary to solve a system problem.

When to reconfigure the BIOS

The initial BIOS configuration is performed at the factory before the Avaya CallPilot server is shipped to you. Reconfigure the BIOS only after you recover from a BIOS or CMOS failure.

Requirements for upgrading or reconfiguring the BIOS

- Empty USB media drive (minimum 64 MB)
- Access to Avaya support site

Important:

You must have all of the hardware components of your system installed and connected before you upgrade the firmware.

To upgrade the system firmware components

Caution:

This procedure must be performed under the strict supervision of an Avaya support engineer in order to avoid firmware corruption and/or system damage.

1. Locate and run the Firmware Check Utility called BIOSChk.bat located here: C:\Program Files\Intel\FlashUpdt.
2. Download the update package from the Avaya support website.
3. Save the zip file onto the Temp directory on your PC.
4. Unzip and place the files on a root directory on an empty USB flash drive (minimum size 64MB).
5. Plug the USB drive into the USB port on the front of the server.
6. Power down the CallPilot server.
7. Restart the CallPilot server and press F6 to go to the boot menu, and select Boot to EFI shell.

   Result: The server boots and automatically detects the firmware upgrade package on the USB drive.
8. Press Q to go to the EFI shell prompt.
9. Under strict supervision from an Avaya support engineer, run the required script below. Press any key when the message "Enter "Q" to quit, any other key to continue" appears. Each time, perform steps 6-8 to go back to the EFI shell and continue with the rest of the scripts.

   Caution:

   If your system requires updates to BIOS and/or BMC, then the update is considered a major update. Therefore, all firmware scripts below must be run in the sequence provided in order to avoid system instability or severe damage.

   - bmcXX.nsh
   - biosXX.nsh
   - meXXX.nsh
   - sdrXX.nsh
   - raidXXXX.nsh
   - hscXXX.nsh

     Note:

     The system asks you to confirm the upload to a new version of hsc firmware. Press **Y** to continue.
   - slp.nsh

   Note:

   Where X=version number.

Note:

The system will reboot automatically at the end of each script pending confirmation from the user.

BIOS settings

Table 16: BIOS settings on page 104 displays the 1006r server BIOS settings. As the system boots, press F2 to enter the 1006r BIOS. BIOS Settings that are in bold text are settings that are modified by Avaya.

Table 16: BIOS settings

Main	Set the Date and change the Quick Boot and POST Error Pause to Disabled.	
Advanced	Processor Configuration (ensure two processors are listed in grey)	Intel OPIFreg Select: AutoMax Enhanced Intel SpeedStep Tech: Enabled Processor C3: Disabled Processor C6: Disabled Core MultiProcessing: All Execute Disable Bit: Enabled Intel Virtualization Technology: Disabled Intel VT for Directed I/O: Disabled Hardware Prefetcher: Enabled
	Memory Configuration	Memory Mirroring: Mirrored NVMA Optimized: Enabled
	Mass Storage Controller Configuration	IntelSAS Entry RAID Module: Enabled Onboard SATA Controller: Enabled SATA Mode: Compatibility
	Serial Port Configuration	Serial Port A Address: 3F8/IRQ4 Serial Port B Address: 2F8/IRQ3
	USB Configuration	USB Function: Enabled Legacy USB Support: Enabled Post60/64 Emulation: Enabled Make USB Devices Non-Bootable: Disabled Device Reset Timeout: 20 seconds Detected Mass Storage Device (DVDROM): Auto USB2.0 Controller: Enabled
	PCI Configuration	Maximize Memory below 4GB: Disabled Memory Mapped I/O Above 4GB: Disabled Onboard Video: Enabled Dual Monitor

		Video: Disabled Onboard NIC1 ROM: Disabled Onboard NIC2 ROM: Disabled Onboard NIC Iscsi ROM: Disabled I/O Module NIC ROM: Enabled
	System Acoustics and Performance Configuration	Set Throttle Mode: Auto: Altitude: 301-900m Set Fan Profile: Performance
Security	All Features Disabled	
Server Management		Assert NMI on SERR: Disabled Resume on AC Power Loss: Last State Clear System Event Log: Disabled FRB-2 Enable: Enabled OS Boot Watchdog Timer: Disabled Plug-n-Play BMC Detection: Disabled ACPI 1.0 Support: Disabled Console Redirection: Leave unchanged System Info: Open for FW info BMC LAN Configuration: DO NOT CHANGE. FUNCTION NOT USED.
Boot Options	Boot Settings Configuration **Note:** Disable all Network boot options.	System Boot Timeout: 15 Boot Option #1: DVDROM Boot Option#2: Onboard RAID Boot Option #3: Internal EFI Shell EFI Optimized Boot: Disabled Boot Option Retry: Disabled USB Boot Priority: Disabled
Boot Manager		CD/DVD RAID EFI Shell

Using system event logs

The system event logs record all the hardware events that take place while the system boots up and functions. You can view these logs through SEL Viewer tool: C:\Program Files\Intel \Selview\selview.exe.

Important:

This tool is only intended for use by authorized level 2 support personnel under Avaya supervision.

The system event logs can only hold 2000 events and display a warning message when full. You must clear the logs to turn off the warning message. Refer to To clear system event logs on page 106.

You can save the system event logs to an USB media drive. Your support representative can use the logs to diagnose hardware faults. Refer to To save system event logs to a USB media drive on page 106.

To view system event logs

1. Run the selview.exe file from C:\Program Files\Intel\Selview.

   Result: The Intel GUI screen appears.
2. Use the arrow keys to scroll through the system events. The details of the currently selected event appear on the bottom of the screen.
3. When you finish viewing events, select File > Exit from the menu bar.
4. Click Exit to close the GUI.

To save system event logs to a USB media drive

1. Connect a USB drive to the USB port on the front of the server.
2. Display the SEL Viewer. Refer to To view system event logs on page 106.
3. Select File > Save As.
4. Enter the file name and destination to save the system event logs to the USB drive.

To clear system event logs

1. Display the SEL Viewer. Refer to To view system event logs on page 106.
2. Select SEL > Clear SEL from the menu bar.

   Result: The list of events is now empty.
3. After clicking Clear SEL, the system asks the following:

   ```
   Are you sure you want to clear the SEL?
   ```

   Select OK.
4. Select File > Exit from the menu bar.
5. Click Exit to close the GUI.

You can also clear the system event logs from BIOS with the following procedure:

1. Restart the PC, and press F2 when prompted.
2. When the BIOS window appears, select Server Management > Clear System Event Log > Enabled.

Maintaining the onboard video and network cards

Network card failure

The network cards are integrated into the server board. If the network cards fail, you must replace the server.

Video card failure

The video card is integrated into the server board. If the video card fails, you must replace the server.

Indicators for video card failure

If the monitor appears to be functioning but no display is visible, look for the following indicators of video card malfunction:

- Brightness and contrast are set at normal level.
- The server is powered on, and one long beep is followed by two short beeps.
- The DVD combo drive light goes on when the server is powered, but no display is visible on the monitor.
- The DVD combo drive light comes on when you type dir D: and press Enter, but no display is visible on the monitor.

Index

A

alarm board 77
  replacement of 77
Alarm Monitor 43
alarms 42, 43
  about 42, 43
  investigating 43
alert icons, component states 50
application event log 28
  definition 28
arp command 35
  parameters and descriptions 35
  running from Windows 35
  syntax 35

B

BIOS 101
  requirements for upgrading 101
boot failure 25
  CallPilot 25
    what to do 25
  Windows 25
    what to do 25

C

call channels 45, 57
  disabling 45
  working with 57
CallPilot 59, 61
  utilities 59, 61
    Diagnostics Tool 59
    PEP Maintenance 59, 61
    Session Trace 61
    System Monitor 59
CallPilot Manager 41–46, 50, 56, 57
  alarms 42, 43
    about 42, 43
    investigating 43
  alert icons, component states 50
  Channel Monitor, using 45, 57
  Event Browser, using 44, 45
  events 41, 44
    about 41, 44
    investigating 44
  fault management 41, 42
    alarm notification 42
    event processing 41
  Maintenance screen 45, 46
    Diagnostics section 46
    General section 46
    Maintenance section 46
    purpose 45
  Multimedia Monitor, using 45, 56
CallPilot services 64
  Channel Monitor tab 64
Channel Monitor tab 64–66
  CallPilot services 64
    critical 64
  DS30 links pane in 66
  DSP pane in 65
Channel Monitor, using 45, 57
channels 45, 56, 57
  call, working with 57
  disabling 45
  multimedia, working with 56
chkdsk utility 39
  parameters and descriptions 39
  running from Windows 39
  syntax 39
commands, TCP/IP 31–33, 35, 36, 38
  arp 35
  ipconfig 31
  nbtstat 36
  netstat 38
  ping 32
  tracert 33
components 15, 42, 48–50, 54
  CallPilot Manager maintenance activities 48
  dependencies 42
  diagnostics that can be run 54
  diagnostics-eligible 54
  replacing 15
  states 49, 50
    Alert icons 50
    description 49
    viewing 50
Courtesy stop, description 51
critical services, CallPilot 64
customer service 9

D

diagnostics 31–33, 35, 36, 38, 53–55
integrated 53, 54
running 53, 54
troubleshooting failures 54
when to run 53
last results 55
viewing 55
TCP/IP 31–33, 35, 36, 38
arp 35
ipconfig 31
nbtstat 36
netstat 38
ping 32
tracert 33
Diagnostics section, Maintenance screen 46
diagnostics tool 31
TCP/IP 31
Diagnostics Tool 59
diagram 11, 14
rear panel 14
slot locations 14
system control panel 11
distributor 9
documentation 9, 16
map 16

E

Event Browser, using 44, 45
event log 28
application 28
security 28
system 28
event logs 28
types, description 28
viewing 28
events 41, 44
about 41, 44
investigating 44

F

fan, hot-swap 74
fault management 41, 42
alarm notification 42
event processing 41
Firmware revision 82
verifying 82
flashing the 82

G

General section, Maintenance screen 46

H

hardware problems, detecting 43

I

indicators 107
integrated diagnostics 53, 54
running 54
troubleshooting failures 54
when to run 53
ipconfig command 31
flags and descriptions 31
running from Windows 31
syntax 31
ipconfig default 31

L

LED, non-illumination of 71
Legend/Help tab 67
location 91
MPB96 DSP 91
logs 28
event types 28
viewing 28
event, viewing 28

M

maintenance 16, 48
activities by component 48
preparing for 16
Maintenance screen, CallPilot Manager 45, 46
Diagnostics section 46
General section 46
Maintenance section 46
purpose 45
MPB96 board 91, 93, 96
replacing or adding 93, 96
multimedia channels, working with 56
Multimedia Monitor, using 45, 56

N

nbtstat command 36, 37
parameters and descriptions 37
running from Windows 37
syntax 36
netstat command 38
parameters and descriptions 38
syntax 38
network card 107
failure 107

P

parts, obtaining replacement 15
PEP Maintenance utility 59, 61
ping command 32
parameters and descriptions 32
running from Windows 32
syntax 32
POST error codes and messages 24
POST message formats 23
power supply, hot-swap 71
Power-On Self-Test 23
See POST 23

R

RAID 81, 82
upgrading 82
RAID system 83
configuring 83
Redundant Array of Independent Disks (RAID) 81
replacement parts, obtaining 15
reseller 9

S

SCSI controller 24
error messages 24
security event log 28
definition 28
server cover 69
removal of 69
Session Trace utility 61
startup problems 25
what to do 25
Stop, description 51
system event log 28
definition 28
System Info tab 66
System Monitor 59, 64, 66, 67
Channel Monitor tab 64
Legend/Help tab 67
System Info tab 66
System Monitor utility 63
system utilities 63
System Monitor 63

T

TCP/IP diagnostics 31–33, 35, 36, 38
arp 35
ipconfig 31
nbtstat 36
netstat 38
ping 32
tracert 33
tracert command 33, 34
parameters and descriptions 34
running from Windows 34
syntax 34
training 9

U

utilities 39, 59, 61, 63
chkdsk 39
Diagnostics Tool 59
PEP Maintenance 59, 61
Session Trace 61
System Monitor 59, 63

V

video card, failure 107
viewing 28

W

Windows 28
viewing 28